LOCKHEED MARTIN ENERGY RESEARCH LIBRARIES
3 4456 0515779 0

CENTRAL RESEARCH LIBRARY
DOCUMENT COLLECTION

cy. 2

ORNL-4583
UC-22 – Isotope Separation

OAK RIDGE NATIONAL LABORATORY
CENTRAL RESEARCH LIBRARY
DOCUMENT COLLECTION
LIBRARY LOAN COPY
DO NOT TRANSFER TO ANOTHER PERSON
If you wish someone else to see this document, send in name with document and the library will arrange a loan.
UCN-7969
13 3-67

CHEMICAL RECOVERY AND REFINEMENT PROCEDURES IN THE ELECTROMAGNETIC SEPARATION OF ISOTOPES

W. C. Davis

OAK RIDGE NATIONAL LABORATORY
operated by
UNION CARBIDE CORPORATION
for the
U.S. ATOMIC ENERGY COMMISSION

Printed in the United States of America. Available from Clearinghouse for Federal
Scientific and Technical Information, National Bureau of Standards,
U.S. Department of Commerce, Springfield, Virginia 22151
Price: Printed Copy $3.00; Microfiche $0.65

LEGAL NOTICE

This report was prepared as an account of Government sponsored work. Neither the United States, nor the Commission, nor any person acting on behalf of the Commission:

A. Makes any warranty or representation, expressed or implied, with respect to the accuracy, completeness, or usefulness of the information contained in this report, or that the use of any information, apparatus, method, or process disclosed in this report may not infringe privately owned rights; or

B. Assumes any liabilities with respect to the use of, or for damages resulting from the use of any information, apparatus, method, or process disclosed in this report.

As used in the above, "person acting on behalf of the Commission" includes any employee or contractor of the Commission, or employee of such contractor, to the extent that such employee or contractor of the Commission, or employee of such contractor prepares, disseminates, or provides access to, any information pursuant to his employment or contract with the Commission, or his employment with such contractor.

ORNL-4583

Contract No. W-7405-eng-26

ISOTOPES DEVELOPMENT CENTER

CHEMICAL RECOVERY AND REFINEMENT PROCEDURES IN THE ELECTROMAGNETIC SEPARATION OF ISOTOPES

Coordinated by

W. C. Davis

Compiled by

Sula J. Marsalis

AUGUST 1970

Contributions by

R. L. Bailey
J. G. Byrd
H. H. Caudill
C. R. Croft
W. C. Davis
H. R. Gwinn
J. A. Kinnane
E. W. McDaniel
F. B. Thomas
J. O. Younghanse

Isotopes Division

OAK RIDGE NATIONAL LABORATORY
Oak Ridge, Tennessee
operated by
UNION CARBIDE CORPORATION
for the
U.S. ATOMIC ENERGY COMMISSION

LOCKHEED MARTIN ENERGY RESEARCH LIBRARIES

3 4456 0515779 0

CONTENTS

Page

Introduction 1

Collector Pockets 1

General Procedures 5

Initial Steps in Recovery and Refinement of Isotopes from Graphite Pockets 5

Initial Steps in Recovery and Refinement of Isotopes from Copper Pockets 5

Initial Steps in Recovery and Refinement of Isotopes from Aluminum Pockets 5

Specific Procedures 7

Barium
Copper Pocket 7
Graphite Pocket 9

Cadmium
Aluminum Pocket 10
Copper Pocket 13

Cerium
Graphite Pocket 15

Chlorine
Copper Pocket 17

Chromium
Graphite Pocket 20

Hafnium
Copper Pocket 22
Graphite Pocket 23

Indium
Graphite Pocket 25

Lead
Copper Pocket 27
Graphite Pocket 28
Copper-Graphite Pocket 29

Osmium
Graphite Pocket 31

Palladium
Graphite Pocket 33

Platinum
Graphite Pocket 35

Potassium
Copper-Graphite Pocket 36
Copper Pocket 38

Page

Ruthenium
Graphite Pocket 39

Strontium
Copper Pocket 42
Graphite Pocket 43

Tantalum
Graphite Pocket 45

Titanium
Graphite Pocket 47

Tungsten
Graphite Pocket 49

Zirconium
Copper Pocket 52
Graphite Pocket 52

Appendix A: Health and Safety Hazards 53

Barium 53

Cadmium 54

Cerium 55

Chlorine 56

Chromium 57

Hafnium 58

Indium 59

Lead 60

Osmium 62

Palladium 63

Platinum 64

Potassium 65

Ruthenium 66

Strontium 67

Tantalum 68

Titanium 69

Tungsten 70

Zirconium 71

Laboratory Reagents 73
Fuming Nitric Acid 73
Perchloric Acid 73

Appendix B: Removal of Impurities 74

Barium
Strontium Impurity 74
Lead and Strontium Impurities 74

Page

Chlorine
Bromine Impurity 76

Lead
Barium and Strontium Impurities 77

Strontium
Barium and Lead Impurities 78

Tungsten
Silica Impurity 79

Appendix C: Special Preparations from Inventory Forms of Isotopes . 80

Barium
$BaCO_3$ 80

Cadmium
Cadmium Metal 81
$CdCl_2$ 82

Chlorine
Anhydrous HCl 83
Cl_2 85

Chromium
CrO_3 88
Chromium Metal 89

Hafnium
Hafnium Metal 90

Lead
$PbCO_3$ 91
PbO 91
Lead Metal 92

Potassium
K_2CO_3 93
K_2CO_3 (Ion Exchange Method) 93
KI 94

Ruthenium
$RuO_2 \cdot xH_2O$ 96

Strontium
$Sr(NO_3)_2$ 98
SrF_2 98

Titanium
Titanium Metal 99

Tungsten
Tungsten Metal 103

Zirconium
Zirconium Metal 104

Appendix D: Special Isotopic Collections 105

Lead-210 105

CHEMICAL RECOVERY AND REFINEMENT PROCEDURES IN THE ELECTROMAGNETIC SEPARATION OF ISOTOPES

W. C. Davis

INTRODUCTION

The primary objective in recovery and refinement of electromagnetically separated isotopes is maintaining the quantity and enrichment level of the separated isotopes; it is axiomatic that no more material can be recovered than was originally present in the collector pocket nor can chemical processing improve the isotopic enrichment. Hence, extreme measures are employed to avoid isotopic contamination and loss of separated materials.

In order to ensure that the best methods known be applied in recovery and refinement of the separated isotopes, a procedures manual seemed necessary. These procedures are the results of the experience of the Electromagnetic Separations Group at Oak Ridge National Laboratory (ORNL) over a period of more than 20 years. In the interest of expediting publication, this procedures manual is being published in parts; the procedures included in Part I represent those procedures completed first rather than any particular order of isotope separation, recovery, or refinement.

While more than one type of collector pocket may have been used previously for the collection of the isotopes of a particular element, the pocket listed in the Specific Procedures for an element indicates the pocket in use at the last separation. If more than one type of collector pocket is still in use, the preferred pocket is listed first.

COLLECTOR POCKETS

It is inherent in the electromagnetic method of separating isotopes that accelerated and resolved ions are caught in some kind of collector pocket after being propelled through a vacuum chamber in a magnetic field (Fig. 1).

ORNL-DWG 70-4809

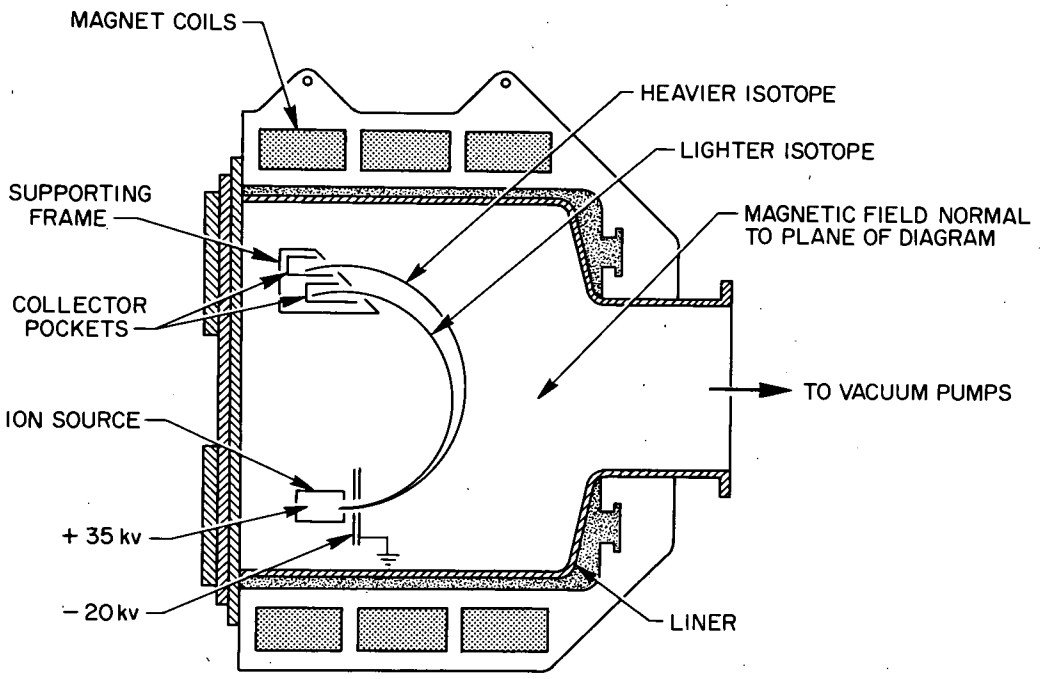

Fig. 1. Schematic Illustration of Calutron Process.

ORNL-DWG 70-5773

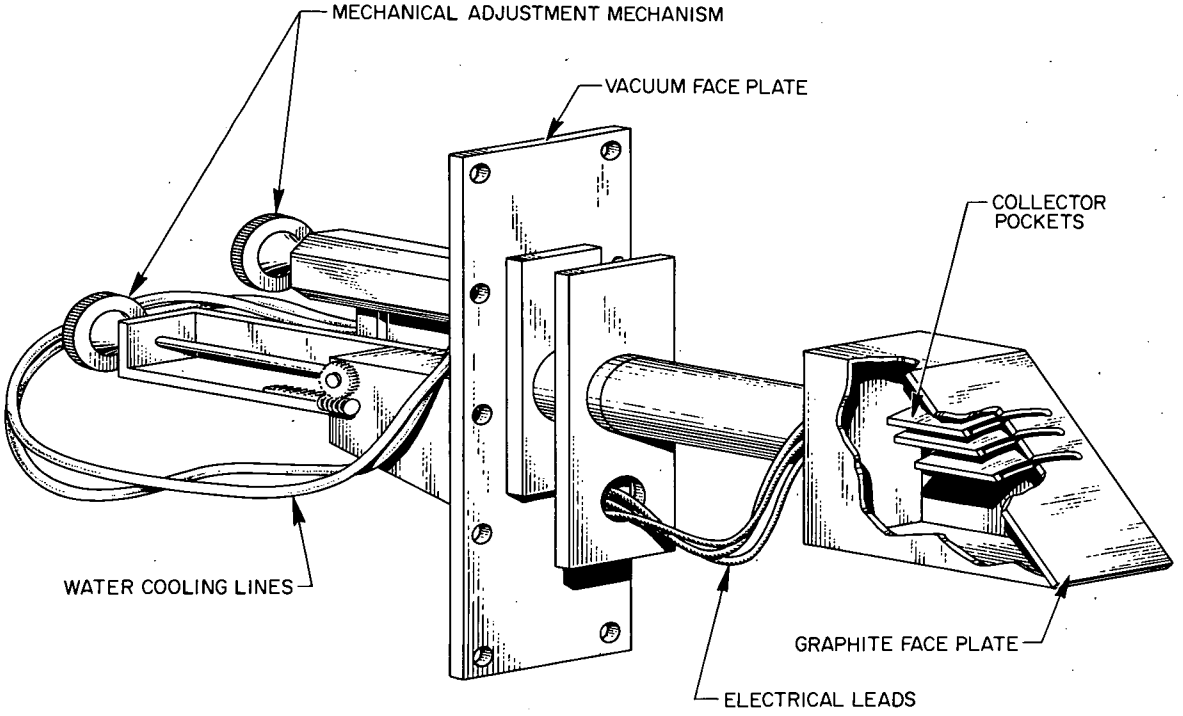

Fig. 2. Isotope Collector.

The basic isotope collector used in the Oak Ridge electromagnetic separators (Fig. 2) consists of an adjustably mounted supporting frame in which collector pockets of standard major dimensions, but of different materials and construction, may be mounted. The number of pockets and the spacings between them are chosen to conform to the beam pattern of the element being processed, and each pocket is electrically isolated to permit monitoring of the ion current which reaches it. The assembly of pockets is covered by a graphite faceplate in which defining slits have been cut to conform to the beam pattern and pocket spacings. The type of collector pocket chosen and its material of construction are usually dependent on the properties of the nuclide being collected.

High purity graphite[1] is the preferred material for fabricating most collector pockets for the following reasons: (1) the enriched sample can be readily reclaimed by a simple ignition step, (2) a minimum of chemical impurities are introduced into the separated nuclide from the collecting substrate, and (3) fabrication of the collector assembly itself is simpler, even if water-cooling is not required (Fig. 3). However, graphite is not a universal collector pocket material since some elements have high vapor pressures, are chemically reactive to residual gases (such as chlorine), or have to be held at the collector surface by chemical combination. In these cases, water-cooled metallic pockets, such as copper or aluminum, are used (Fig. 3). Actual choice of metal usually depends on chemical compatibility of element being collected, ease of subsequent chemical separation, and degree of ion retention of earlier separations. Of course, the metal should be non-magnetic and easily machinable.

A copper-graphite pocket (Fig. 3) has been used for some collections. For separations involving elements with high vapor pressure that have isotopes of high natural abundance (>75%), a heavy strip of graphite is sometimes added to water-cooled collector pockets to slow the impinging ions, thereby protecting the copper surfaces from erosion.

Each of the chemical procedures given in this compilation start with isotopically enriched samples that have been collected in one of the above types of collector pockets.

---

[1]Total chemical impurity should not exceed 2 ppm.

ORNL-DWG 70-4808

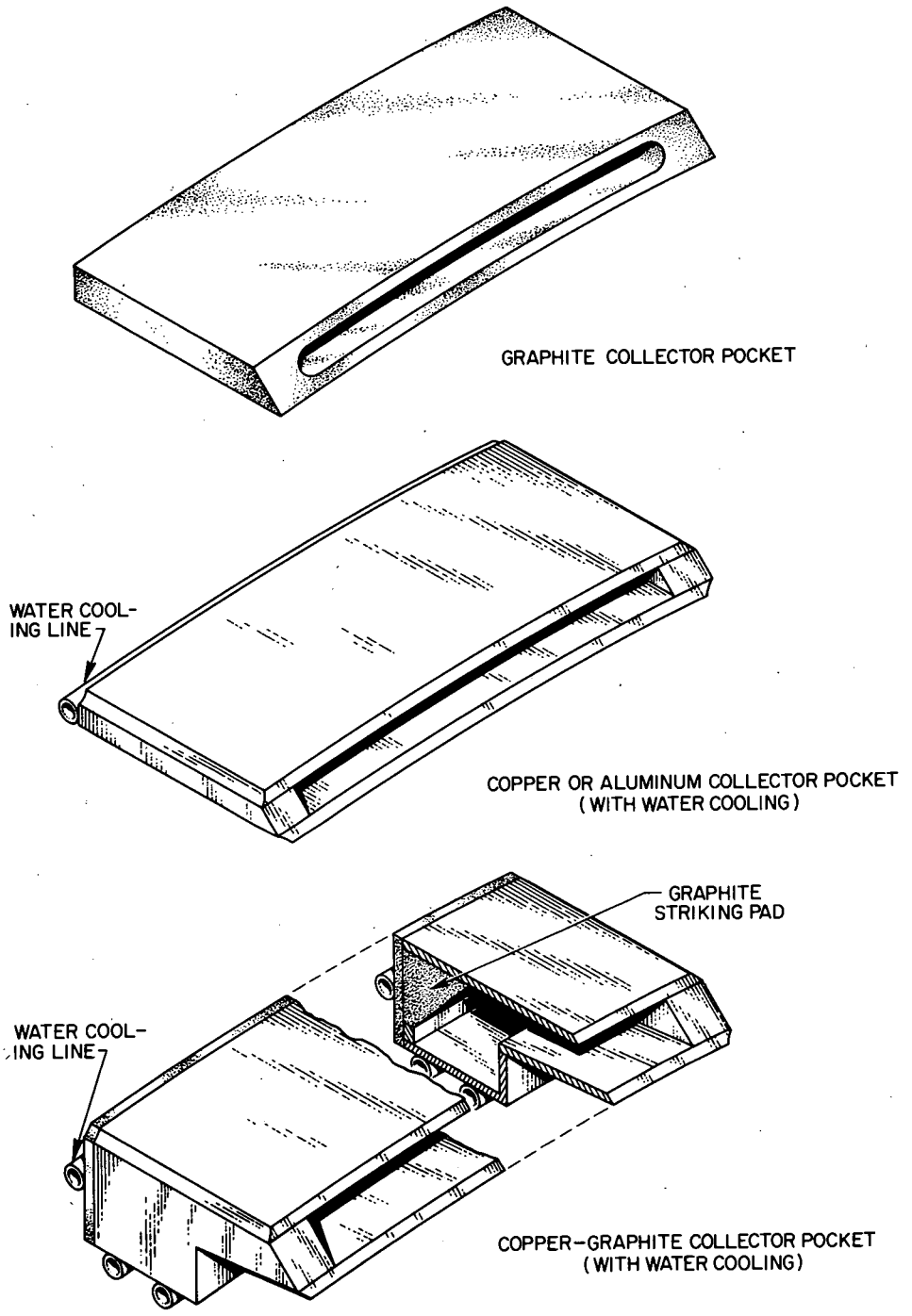

Fig. 3. Collector Pockets.

GENERAL PROCEDURES

Initial Steps in Recovery and Refinement of Isotopes from Graphite Pockets

1. Clean the outside surfaces of the collector pocket very carefully by buffing with Al_2O_3-coated abrasive cloth.
2. Remove the thick, heavy ends of the pocket with a hacksaw to within 1/8 in. of the body of the pocket.[2]
3. Remove the tape covering the opening into the pocket and crush the pocket in a plastic sack or in plastic sheet wrappings.

Initial Steps in Recovery and Refinement of Isotopes from Copper Pockets

1. Clean the outside surfaces of the collector pocket very carefully, first with water, then with hot 1:1 HNO_3 to remove any neutral and/or adjacent isotopically enriched sample. Any holes in the pocket should be covered or filled to prevent contaminating the contents of the pocket.
2. Discard the washings, remove the tape used to seal the opening of the pocket, and extract the isotope from the interior with hot 1:1 HNO_3. Prolonged leaching may be necessary to remove sheets of copper sputtered from one surface to another. Prying with stainless steel spatulas or spreading the pocket opening with stainless bars often aids recovery.
3. Transfer the solution, along with any loose undecomposed copper metal or alloy, to a beaker and digest until solution is essentially complete. Small additions of concentrated HNO_3 may be needed to dissolve all solid.

Initial Steps in Recovery and Refinement of Isotopes from Aluminum Pockets

1. Clean the outside of the aluminum pocket by leaching pocket with hot 1:1 HNO_3.

---

[2]It has been shown from many determinations that removing the heavy ends of graphite pockets effectively reduces ignition time and tends to lower the quantity of impurities without loss of isotopic material.

2. Remove tape from the opening into the pocket, pry adhering flakes loose, and pour loose material into a Pyrex dish.
3. Extract the isotope from the inside surfaces of the pocket by leaching with concentrated HNO_3, then with a solution of 4 parts H_2O:3 parts HNO_3:1 part HCl, and finally with hot concentrated HNO_3.

SPECIFIC PROCEDURES

BARIUM

Isotope	Natural abundance, atom %	Isotope	Natural abundance, atom %
^{130}Ba	0.101	^{136}Ba	7.81
^{132}Ba	0.097	^{137}Ba	11.32
^{134}Ba	2.42	^{138}Ba	71.66
^{135}Ba	6.59		

INVENTORY FORM: $Ba(NO_3)_2$

Copper Pocket

1. Follow steps in General Procedures for copper pocket, observing the following precautions:

   The ^{137}Ba pocket must be cleaned on the exterior very carefully because of its nearness in the receiver assembly to the ^{138}Ba pocket and hence the danger of ^{138}Ba contamination.

   A chemical test must be made to determine if all barium has been removed from the copper pocket. It is somewhat difficult to ascertain when this removal is complete without a chemical test since barium alloys with copper to undetermined depths and copper sputters from the struck surface to the opposite surface "burying" the barium. A rough qualitative test is usually effective: the copper surface is treated with 1:1 HNO_3--a dark surface indicates the presence of barium, and further leaching is required; a bright surface which remains bright indicates that barium is absent.
2. Evaporate to near dryness to dispel excess HNO_3, first on a hot plate, then on a steam bath or other low-temperature device. The copper salts should not be baked to an insoluble residue.
3. Dissolve the moist residue in hot water and filter through Whatman No. 42 paper.

4. Electrolyze the filtrate between platinum electrodes at ~1 amp while stirring with magnetic stirrer; copper will be deposited at the cathode and any lead present will be deposited simultaneously at the anode. Nitrous acid is usually present in HNO_3 solutions, especially those obtained by dissolving metallic samples, and tends to interfere with the electrodeposition process. This HNO_2 may be removed by the addition of ~1 g of urea, the urea being added, with stirring, until there is no further evolution of gas:

$$2HNO_2 + CO(NH_2)_2 \rightarrow 2N_2 + CO_2 + 2H_2 \ .$$

5. Evaporate the electrolyzed solution to dryness, dissolve the crystals in a minimum, but known, quantity of hot water, and add, with stirring, fuming HNO_3 until the HNO_3 concentration is 76 wt %. A concentration of 76% HNO_3 may be achieved by adding 3 ml 70% HNO_3 and 11 ml 100% HNO_3 <u>or</u> by adding 13.4 ml fuming HNO_3 (density 1.49-1.50 g/ml) to 5.0 ml solution. The following formula is useful in calculating the volume of acid needed to produce a specified percentage of HNO_3 when the volume of water containing barium is known:

$$0.295Z = \frac{(\text{desired final percentage})(\text{ml solution containing salt})}{100}$$

where Z is milliliters of fuming HNO_3.

6. Allow the $Ba(NO_3)_2$ crystals to settle for at least 30 min or until supernate clears and filter at reduced pressure on a Pyrex Buchner funnel with medium frit. A tapered Teflon plug with opening drilled slightly larger than stem of funnel should be used to join the filter funnel and vacuum flask since HNO_3 fumes corrode rubber stoppers.
7. Transfer the crystals from the beaker to the funnel with 76% HNO_3 and wash several times with the strong acid.
8. Dissolve the salt through the funnel into a clean flask with hot water, transfer the solution to a beaker, evaporate to dryness, and repeat the dissolving, precipitating, and filtering.
9. Again dissolve the salt through the funnel with hot water and collect in a clean flask. Transfer the solution to a beaker and evaporate to dryness on a steam bath.

10. Dry the $Ba(NO_3)_2$ crystals in an electric drying oven at 130-140°C, preferably overnight.

Graphite Pocket

1. Follow steps in General Procedure for graphite pockets. Special care should be taken in cleaning the exterior of the ^{137}Ba graphite pocket. The high-intensity ^{138}Ba ion beam can cause extensive deposits of ^{138}Ba on the outside of the ^{137}Ba pocket. In some cases white deposits, indicative of BaO or $BaCO_3$, are found on the outside of graphite pockets used to collect ^{137}Ba.
2. Extract the barium from the broken graphite prior to ignition of the graphite in oxygen atmosphere (this pre-ignition extraction step is preferred for barium because of the corrosive action of barium salts). If the sample is small, transfer the broken graphite to an extra large Soxhlet extractor and extract with 1:2 HNO_3 for 24 hr; decant the solution and wash the graphite with water; reserve barium-containing leach solution and washings; dry graphite and transfer to a quartz boat. If the sample is large, add enough 1:1 HNO_3 to the graphite pieces to cover the solids and allow to stand until reaction subsides; digest mixture on steam bath, preferably overnight; allow solid to settle, decant supernatant liquid, wash residue with water, and transfer residue to quartz boat; reserve barium-containing solution.
3. Ignite the carbonaceous matter under oxygen in a horizontal Vycor tube heated by an electric furnace. Continue oxidation until the carbon has been consumed.
4. Cool the boat, digest the ash in 1:1 HNO_3, dilute the solution and filter through paper into solution from Step 2.
5. Concentrate the filtrate until the HNO_3 is ~20 vol % and electrolyze between platinum electrodes at 1 amp, with stirring, to remove copper or lead impurity.
6. Continue refinement procedure beginning with Step 5 in procedure for collecting barium in copper pockets.

CADMIUM

Isotope	Natural abundance, atom %	Isotope	Natural abundance, atom %
^{106}Cd	1.215	^{112}Cd	24.07
^{108}Cd	0.875	^{113}Cd	12.26
^{110}Cd	12.39	^{114}Cd	28.86
^{111}Cd	12.75	^{116}Cd	7.58

INVENTORY FORM: CdO

Aluminum Pocket

1. Follow instructions in General Procedures for recovery from aluminum pocket.
2. Transfer the loose solids to a beaker, add the acidic leach solutions, and heat until the solids dissolve. Evaporate the resulting solution to near dryness and redissolve the solid material in water.
3. Add a sufficient quantity of aqueous NaOH to make the cadmium-bearing solution distinctly alkaline and to precipitate $Cd(OH)_2$ (along with impurity hydroxides such as iron, copper). Most of the aluminum and zinc impurities, if present, are converted to the soluble sodium aluminate or sodium zincate and pass into the filtrate.
4. Centrifuge $Cd(OH)_2$ in plastic containers and wash the insoluble material with H_2O. Treat the accumulated centrifugates and wash solutions with H_2S to concentrate any cadmium that did not precipitate.
5. Dissolve $Cd(OH)_2$ in the smallest quantity of concentrated HCl which will effect complete solution, then adjust with water to 2 M HCl. Triple this volume by adding two additional volumes of 2 M HCl.
6. Prepare a column of Dowex 1-X8, 100-200 mesh, ion exchange resin of Bio-Rad (or AR) quality in the chloride form. The size of the column is dependent on the amount of cadmium present since

all the cadmium should be absorbed on the resin. One liter of wet resin retains ~80 g cadmium under ideal conditions; however, 100 ml of wet resin should be used for each 5 g of cadmium assumed present in order to protect against losses from channeling or rapid flow rate.

7. Pour the liquid into the top of the column, allowing it to flow out the bottom at ~20 ml/min. Wash all copper and those impurities that do not form stable complexes from the resin with 2 M HCl. Wash the column with a small quantity of water to remove excess HCl, but test liquid for cadmium.
8. Displace the cadmium from the resin, first with 1:4 NH_4OH, and finally with 1:1 NH_4OH. A very distinct darker color will be observed traveling down the column as NH_4OH removes cadmium. (When all the cadmium has been removed, wash with water, then with 2 M HCl to recondition the resin.)
9. Filter the ammoniacal solution of cadmium to remove insoluble hydroxides, such as $Fe(OH)_3$. Add $(NH_4)_2S$ to the filtrate to concentrate cadmium and to remove any tin which may be present. Centrifuge the mixture and wash the precipitate well with a dilute solution of $(NH_4)_2S$.
10. Dissolve CdS from the centrifuge tubes with 6 M HCl, transfer the resulting solution to a beaker, and saturate with H_2S. Dilute to 3 M HCl by adding a volume of water equal to the total volume of liquid and again saturate with H_2S. Heat to aid coagulation and filter off sulfides of impurities such as lead or copper. (It should be noted that some cadmium will precipitate if the cadmium concentration is high. For best results there should be 20 to 50 g of cadmium in 4 liters of volume containing ~500 ml of concentrated HCL.)
11. Dilute the filtered solution with a volume of water equal to the total volume of solution (to give a solution 1.5 M in HCl) and add H_2S while heating. Most of the CdS is precipitated here. Any remaining cadmium is precipitated by adding NH_4OH until alkaline, then adding $(NH_4)_2S$. This treatment also precipitates any iron or zinc still present. (Any cadmium present

can be recovered by dissolving the precipitate in a minimum of concentrated HCl, followed by precipitation with H_2S from a solution 1.5 M in HCl.)

12. Collect all of the CdS, dissolve it in 6 M HCl, and precipitate the sulfide by the procedure described in Steps 10 and 11. Centrifuge mixture, wash the precipitate well, and then dissolve it in 4 M HCl.
13. Evaporate the chloride solution to dryness, treat the residue with 1:1 HNO_3 by repeated evaporations until all the chloride has been removed. Dissolve the nitrate, which on evaporation is a syrupy melt, in water containing enough NH_4OH to make the solution alkaline and to complex the cadmium. Any precipitate that appears at this point, such as a trace of the complex of iron or aluminum, should be removed by filtration. Collect the filtrate in a plastic beaker; the concentration should be ~50 g cadmium/2 liters solution.
14. Add excess $(NH_4)_2CO_3$ solution to the filtrate to precipitate $CdCO_3$ (the $CdCO_3$ will not precipitate until excess NH_4OH is evaporated away; the plastic beaker should be covered with a flat plastic lid which allows the ammonia to be removed slowly--this slow removal leads to a homogeneous type precipitate which is purer and more easily handled; at times, the precipitate will form on the sides and bottom of the beaker, but this problem can be simplified by stirring occasionally to keep the precipitate broken away).
15. Centrifuge the mixture in plastic centrifuge tubes, and wash the $CdCO_3$ precipitate well with water, then with acetone.
16. Dry the water-free solid at low heat (steam bath, warm air) to remove the acetone. Transfer the carbonate from the plastic tubes to a porcelain dish, and decompose the carbonate to CdO in an electric furnace, starting at room temperature and heating to 650°C. The temperature should be held at 650°C for 4 to 6 hr (this temperature should not be exceeded because of the volatility of CdO).

Copper Pocket

1. Follow General Procedures for recovery from copper pocket.
2. Evaporate solution to dryness and convert nitrate to chloride by repeated evaporations in the presence of concentrated HCl.
3. Dissolve chloride residue in water and evaporate to dryness to remove excess HCl.
4. Dissolve residue in 2 M HCl and filter solution through Whatman No. 42 paper. Dilute solution with approximately three times the volume of 2 M HCl required to dissolve the sample.
5. Condition ion exchange column in preparation for absorbing cadmium on Dowex 1 resin from chloride solution by passing two or more column volumes (the amount of liquid required to fill spaces between resin granules to height of leveling arm) of 2 M HCl through the column.
6. Place sample in sample reservoir and allow sample to run through the column. All other openings to the column should be closed (the air vent should be especially carefully checked).
7. Pass 2 M HCl from reservoir into column until all the green color of copper ion is washed out of the resin.
8. Add enough water to sample reservoir to wash column with 2 column volumes of water; then add at least 2 column volumes of 1:4 NH_4OH to the sample reservoir and allow to run into column. A column change is evident as the NH_4OH replaces the cadmium complex ion from the resin (column must be watched closely when eluting with 1:4 NH_4OH since $Cd(OH)_2$ precipitates in the resin and in the column exits at low concentrations of NH_4OH and tends to plug the column).
9. Wash the column with 2 column volumes of water and retain the washings (the column should then be reconditioned with 2 M HCl for further use).
10. Precipitate cadmium as CdS by passing H_2S through the combined hot solution (the eluates from column, the washings before and after NH_4OH elution, and the NH_4OH eluate) and allow precipitate to settle overnight.

11. Centrifuge mixture, decant supernate, and wash precipitate with water saturated with H_2S. Check centrifugate for complete precipitation and filter through Whatman No. 42 paper.
12. Dissolve CdS precipitate in centrifuge tube with 1:1 HCl and filter solution through same funnel.
13. Evaporate filtrate to dryness, dissolve residue in 1 M H_2SO_4, heat solution, and pass H_2S through solution. While passing H_2S through solution dilute to 0.5 M H_2SO_4 with hot water and ultimately to 0.25 M H_2SO_4 (this step helps eliminate zinc impurity since ZnS does not precipitate readily in 1 M H_2SO_4). Allow to settle overnight.
14. Centrifuge mixture, decant supernatant liquid, wash precipitate with 0.25 M H_2SO_4, pass H_2S through decanted supernate, and filter on Whatman No. 42 paper.
15. Dissolve residue in centrifuge tube and off filter paper with hot 4 M HCl, dilute solution to 2 M HCl, and filter through Whatman No. 42 paper.
16. Pass solution through column as before, collecting NH_4OH eluate in plastic beakers.
17. Evaporate to dryness on steam bath, dissolve residue in minimum of 1:1 HCl, transfer solution to glass beaker, and evaporate to dryness. Dissolve residue in water and again evaporate to dryness.
18. Dissolve $CdCl_2$ residue in water and add saturated aqueous $(NH_4)_2CO_3$ in excess to ensure quantitative precipitation.
19. Digest mixture on steam bath until precipitate settles on bottom of beaker and solution clears.
20. Centrifuge mixture, decant supernate, and wash precipitate with water. Dry precipitate in centrifuge tube.
21. Transfer $CdCO_3$ to platinum dish and ignite in muffle furnace for 2 hr at 600°C. Finally ignite for 1 hr at 650°C to ensure complete change to CdO.

CERIUM

Isotope	Natural abundance, atom %	Isotope	Natural abundance, atom %
^{136}Ce	0.193	^{140}Ce	88.48
^{138}Ce	0.250	^{142}Ce	11.07

INVENTORY FORM: CeO_2

Graphite Pocket

1. Follow General Procedures for recovery from graphite pocket.
2. Transfer the carbonaceous material to a quartz boat; then with boat and contents in a horizontal quartz or Vycor tube ignite in oxygen at ~800°C. Continue oxidation until graphite is completely consumed.
3. Remove the boat from the ignition tube and allow boat and residue to cool. Transfer the residue to a beaker with a spatula (any CeO_2 adhering to the boat should be dissolved in hot concentrated HNO_3 and dropwise additions of 30% H_2O_2 to effect the transfer; any insoluble matter adhering to the boat should be washed into the beaker with a small stream of water).
4. Cover residue with a mixture of 10 parts HNO_3, 1 part 30% H_2O_2. Dissolve the sample by heating on steam bath, making periodic additions of 5-10 ml 30% H_2O_2 if necessary to complete dissolution. Continue heating after solution is complete to decompose excess H_2O_2.
5. Cool the solution and dilute with a volume of water equal to the volume of solution to permit filtration on paper. Filter through Whatman No. 42 paper. Reserve filtrate.
6. Add concentrated NH_4OH to the filtrate until distinctly alkaline; then add 30% H_2O_2 dropwise with stirring. Heat mixture on a steam bath until excess H_2O_2 is decomposed.
7. Allow the $Ce(OH)_4$ precipitate to settle; decant clear supernate. Wash the precipitate with concentrated NH_4OH by decantation until there is no further physical evidence of blue copper complex.

8. Wash the precipitate onto paper with concentrated NH_4OH and filter the decanted solution and washings from Step 7 through the same paper.
9. Ignite the paper and residue in Vycor at ~800°C to CeO_2.
10. Dissolve the CeO_2 in a mixture (by volume) of 10 parts HNO_3/ 1 part 30% H_2O_2. Heat solution on steam bath until H_2O_2 is decomposed.
11. Cool the solution and dilute with a volume of water equal to the total volume of solution and filter to remove any silica present.
12. Precipitate cerium from the filtrate by adding saturated oxalic acid while stirring (1 g of $H_2C_2O_4 \cdot 2H_2O$ dissolves in ~7 ml water at room temperature).
13. Allow the precipitate to digest on a steam bath; then transfer solid to filter paper, washing any solid from beaker with saturated $H_2C_2O_4$ solution.
14. Wash residue with saturated $H_2C_2O_4$ solution. Transfer paper and oxalate residue to a Vycor container and dry at ~120°C in an electric drying oven.
15. Ignite at 900°C to CeO_2.

CHLORINE

Isotope	Natural abundance, atom %
^{35}Cl	75.4
^{37}Cl	24.6

INVENTORY FORM: NaCl

Copper Pocket

1. Remove copper plate attached to mouth of pocket. Close mouth of pocket with strips of masking tape to prevent dilution from wash liquid or loss of loose particles of sample.
2. Clean the outside of the copper pocket by washing with hot 1:1 HNO_3 to remove any natural or adjacent isotopic material deposited during the separation process. Wash thoroughly with water.
3. Remove the tape carefully from pocket opening and wash the area that was covered with the tape with a small piece of sponge slightly moist with 1:1 HNO_3. Care should be taken to prevent the entry of either acid or water at this point.
4. Wash the copper plate separately, retaining the wash from the lower side but discharging the wash from the outside surface.
5. Transfer the magnesium turnings (which were used to combine with the slightly energetic sputtered chlorine) from the collector pocket to a three-neck, round-bottom reaction flask equipped with (1) inlet for a nitrogen purge, (2) inlet for a dropping funnel, and (3) outlet connected to three gas washing bottles in series: the first empty to serve as a safety trap, the second containing water, and the third containing a solution of 75-90% of the stoichiometric quantity of NaOH needed to react with the HCl produced from AgCl formed in the concentration of chlorine (the best way to concentrate the chlorine and provide a simultaneous refinement step is by precipitation

with $AgNO_3$ to AgCl). The turnings should be kept dry during the transfer to prevent any evolution of HCl gas.

6. Start the flow of N_2 and purge the flask for 10 min. Add water very slowly from the dropping funnel until the reaction is complete, then add 1:10 HNO_3 cautiously. Warm the flask, using a heating mantle, until the reaction subsides. Then add concentrated HNO_3 dropwise at first, finally increasing the acid concentration of the solution to 1:1 HNO_3. The additions should be continued until all the chips are in solution.
7. Combine the contents of the flask with the two scrubber solutions. Reserve.
8. Remove the magnesium plate from inside the pocket, wash with water, then with 1.5 M HNO_3 until all $MgCl_2$ has been dissolved. Combine solution with that from Step 7.
9. Wash the inside of the copper pocket, first with water, then with 1.5 M HNO_3 until the wash solution gives a negative test for Cl^- (lack of cloudiness or precipitation of AgCl when $AgNO_3$ is added). Combine the solution with the main solution obtained in Steps 7 and 8.
10. Filter the combined solutions on Whatman No. 42 filter paper which has been washed with HNO_3 (and then with distilled water) to remove all traces of Cl^- from the paper.
11. Add 1 M $AgNO_3$ to completely precipitate Cl^-. Allow the precipitate to settle, centrifuge mixture, decant clear liquid, and wash residue well with 1 M HNO_3.
12. Dissolve AgCl in NH_4OH and re-precipitate by adding HNO_3 until solution is acidic. Again allow precipitate to settle, centrifuge mixture, and wash residue to remove metal ion impurities.
13. Weigh and transfer the precipitate to a porcelain boat; place the boat in a quartz tube situated horizontally in an electric tube furnace. Purge the system with N_2; then heat slowly to 110°C to remove water.
14. Connect the outlet tube to the gas scrubbers in series using all ground-glass connections. Purge the system with N_2 and start the flow of H_2. Continue heating slowly, allowing the

furnace to heat to 400°C; heat at this temperature for ~2 hr. Continue heating to 750°C and hold for ~8 hr, or until reduction is complete.

15. Cool with N_2 flow, remove scrubbers, and transfer combined scrubber solutions to a beaker. Titrate the slightly acidic solution with 0.1000 N NaOH, using methyl red indicator.
16. Concentrate the solution to low volume on a hot plate, transfer to a platinum dish, and dry overnight in an oven at 125-135°C.
17. Transfer dish and contents to muffle furnace and heat to 800°C, allowing the temperature to remain at 800°C for ~45 min. Cool.
18. Dissolve the salt in water and filter through properly washed Whatman No. 42 paper (Step 10). Wash residue thoroughly with hot water.
19. Transfer the NaCl-containing filtrate to a polyethylene beaker, evaporate to low volume on steam bath, and dry in an electric oven at 115-125°C.

CHROMIUM

Isotope	Natural abundance, atom %
^{50}Cr	4.31
^{52}Cr	83.76
^{53}Cr	9.55
^{54}Cr	2.38

INVENTORY FORM: Cr_2O_3

Graphite Pocket

1. Follow steps in General Procedures for recovery from graphite pocket.
2. Transfer graphite pieces to quartz boat inside Vycor tube and ignite at 800°C under oxygen atmosphere. Continue oxidation until graphite is consumed.
3. Heat ash in presence of 20 ml $HClO_4$/g Cr_2O_3 to boiling to oxidize green Cr^{3+} to orange-red Cr^{6+}. Heating should be continued until all green color from the Cr^{3+} disappears.
4. Cool to room temperature quickly and filter by suction on sintered glass. Wash residue with 70% $HClO_4$ (long exposure to air must be avoided to prevent absorption of moisture). Discard filtrate.
5. Dissolve CrO_3 through filter with water, heat filtrate, and add NH_4OH until alkaline to precipitate aluminum impurities. Filter.
6. Acidify filtrate with H_2SO_4 and add $NH_2(OH)_2 \cdot H_2SO_4$ to reduce the Cr^{6+} to Cr^{3+}. The solution should be a very deep green color, entirely free of Cr^{6+} orange.
7. Precipitate the chromium as $Cr(OH)_3$ by adding 1:1 filtered NH_4OH to the neutral point and adding sufficient urea to the hot solution to effect complete precipitation.

8. Filter on paper and wash residue with hot 1% NH_4NO_3.
9. Transfer $Cr(OH)_3$ residue to Vycor dish and dry in oven. Ignite to Cr_2O_3 by gradually increasing temperature to 850°C. Heat at this temperature for ~2 hr.

HAFNIUM

Isotope	Natural abundance, atom %	Isotope	Natural abundance, atom %
^{174}Hf	0.18	^{178}Hf	27.08
^{176}Hf	5.15	^{179}Hf	13.78
^{177}Hf	18.39	^{180}Hf	35.44

INVENTORY FORM: HfO_2

Copper Pocket

1. Follow instructions in General Procedures for recovery from copper pocket. Since hafnium is almost insoluble in HNO_3 and must be removed by undercutting the deposit, the stripping of the hafnium from the inside surfaces of the pockets requires repeated extractions.
2. Filter on Whatman No. 42 paper, reserve residue, and add a sufficient quantity of concentrated NH_4OH to the filtrate to make the solution distinctly alkaline.
3. Filter to separate any precipitate which may be formed at this point and dissolve precipitate in 1:1 HNO_3.
4. Dilute solution to 1 M (or less) in HNO_3 and electrolyze between platinum electrodes at 1 amp, with constant stirring, to remove copper impurity.
5. Decompose the filter paper from Step 2 with HNO_3 and H_2SO_4 and dissolve the hafnium metal residue by prolonged digestion with hot concentrated H_2SO_4.
6. Cool the solution, dilute until the resulting solution is ~10 vol % in free acid, and filter on paper. Combine the filtrate with that obtained in Step 4.
7. Precipitate hafnium as the hydrate of hafnium(IV) oxide, $HfO_2 \cdot 2H_2O$ (sometimes referred to as hafnium hydroxide, $Hf(OH)_4$), from a cool solution with an excess of 1:1 filtered NH_4OH. Centrifuge the white gelatinous precipitate and wash thoroughly with

distilled water. The precipitate should not be digested on a steam bath, nor should the solution be allowed to get hot as a result of the heat of reaction. When precipitated hot, $HfO_2 \cdot 2H_2O$ is sparingly soluble in dilute acids and in concentrated acids.

8. Dissolve the precipitate in a minimum of hot 6 M HCl and dilute solution to 1 M HCl. Filter if necessary, repeating precipitation with NH_4OH (Step 7) if very much copper were occluded with precipitate.
9. Add at least 150 ml of a 16% solution of DL-mandelic acid for each gram of HfO_2 assumed present and heat to 85°C for 30 min, stirring occasionally. A longer digestion period is advisable if more than a gram of hafnium is involved. Digestion is necessary to effect quantitative precipitation even if precipitation begins at room temperature; heating is necessary to hydrolyze the reagent completely.
10. Filter the tetramandalate on Whatman No. 42 paper, using a platinum filter cone and gentle suction. Wash the precipitate several times with hot 2% HCl containing 5% DL-mandelic acid.
11. Dry the paper and precipitate in a platinum dish, char the paper at 300°C, and ignite residue to HfO_2 at 900°C in oxygen.

Graphite Pocket

1. Follow instructions in General Procedures for recovery from graphite pocket.
2. Transfer the broken graphite to a quartz boat, insert in a Vycor tube, and ignite in oxygen at 800°C. Continue oxidation until all carbonaceous matter has been consumed.
3. Transfer the residue, which is primarily HfO_2 (but also contains small quantities of Al_2O_3, CaO, SiO_2), to a Pyrex beaker and digest with hot concentrated H_2SO_4.
4. Cool the solution, dilute until the resulting solution is 10 vol % in free acid, and filter on paper. If an appreciable residue remains (residue may contain undecomposed oxide or possibly the carbide), ignite paper and residue in platinum; then fuse with

10 g of $K_2S_2O_7$ for each gram of HfO_2. Dissolve the melt in 1 M H_2SO_4 and filter into main solution.

5. Complete the refinement following refinement procedure for hafnium collected in copper pocket, starting with Step 7.

INDIUM

Isotope	Natural abundance, atom %
^{113}In	4.23
^{115}In	95.77

INVENTORY FORM: In_2O_3

Graphite Pocket

1. Follow first step in General Procedures for recovery from graphite pocket.
2. Break the graphite into small pieces and leach with 1:1 HNO_3 in a Soxhlet extractor. Extract overnight.
3. Decant the solution from the graphite and rinse graphite with water. Reserve leach solution and washings. Dry graphite, then ignite in quartz boat in an electric tube furnace under a stream of O_2 at 700-800°C.
4. Dissolve ash in concentrated HNO_3 and combine the solution with leach solution and washings from Step 3. Filter through paper and evaporate indium-containing filtrate to near dryness.
5. Add water to adjust concentration to 0.1 g indium/200 ml solution, heat to near boiling, and precipitate indium with a slight excess of NH_4OH. Filter through Whatman No. 42 paper at reduced pressure and wash $In(OH)_3$ residue with faintly ammoniacal 1% NH_4NO_3 solution.
6. Dry the paper and residue, then carefully ignite and heat to 650-700°C (the ignition of $In(OH)_3$ precipitates must be done carefully under well-controlled oxidizing conditions, with special care being taken to avoid flaming the filter paper--which might cause partial reduction to indium metal and loss by volatilization).
7. Dissolve the In_2O_3 in 1:1 H_2SO_4 and filter to remove silica. Adjust the acidity of the filtrate to a pH of 1.8 with NH_4OH

and saturate the solution with H_2S to precipitate In_2S_3. Collect the precipitate on a sintered glass frit and wash residue with 0.02 M H_2SO_4 saturated with H_2S.

8. Dissolve In_2S_3 through the filter with 1:1 HNO_3, dilute filtrate suffifiently to filter on paper, and precipitate indium with 1:1 NH_4OH. Filter mixture on paper and wash residue with warm, faintly ammoniacal 10% NH_4NO_3.
9. Transfer the paper and residue to a platinum dish and carefully dry, char, and ignite--without flaming--to a final temperature of 800°C for several minutes.
10. Place the dish containing the In_2O_3 in a desiccator to cool.

LEAD

Isotope	Natural abundance, atom %
^{204}Pb	1.48
^{206}Pb	23.6
^{207}Pb	22.6
^{208}Pb	52.3

INVENTORY FORM: $Pb(NO_3)_2$

Copper Pocket

1. Follow instructions in General Procedures for copper pocket. Since it is difficult to determine visually when all of the lead has been removed from the copper pocket (lead alloys with copper to undetermined depths and copper sputters from the struck surface to the opposite surface "burying" some of the lead), a rough qualitative test should be made. If the copper surface darkens when treated with 1:1 HNO_3, lead is still present and further leaching is required; a bright surface which remains bright for a few minutes is a negative test for lead.
2. Cool the solution and filter on No. 42 Whatman paper, washing the residue well with hot water.
3. Make the solution to ~20 vol % in HNO_3 and electrolyze between platinum electrodes at ~1 amp with constant stirring. The lead is deposited as PbO_2 on the anode, and the copper is deposited simultaneously on the cathode (the electrolytic deposition of PbO_2 is best made upon a roughened platinum gauze if the lead is to be determined by direct weighing, and deposition of the dioxide is enhanced if copper is present; there is danger of depositing lead on the cathode in warm HNO_3 solutions at concentrations less than 20%--at very low concentrations of HNO_3, deposition at the cathode may occur in cool solution).

4. Test for completeness of deposition by adding water, continuing the electrolysis for 10-15 min and observing whether further deposition occurs on the clean part of the electrode. When deposition is complete, and without interrupting the current, raise the electrode and wash with water.
5. Transfer the electrode to a second beaker (sufficiently large to allow for considerable bubbling), cover with cold 1:4 HNO_3, and add dropwise several milliliters of 30% H_2O_2 (~10 ml H_2O_2/liter solution). Remove most of the PbO_2 deposit by digesting at room temperature, finally by applying low heat with a hot plate.
6. Remove the platinum electrode from the solution, wash electrode with distilled water, and evaporate solution to dryness.
7. Dissolve the crystals in a minimum, but known, quantity of hot water and add fuming HNO_3 with vigorous stirring until the concentration of HNO_3 reaches 84 wt % (barium procedure, p. 7, for discussion of calculation).
8. Allow the separated $Pb(NO_3)_2$ crystals to settle for ~30 min, or until supernate clears, and filter at reduced pressure on a Pyrex Buchner funnel with medium frit. Use tapered Teflon plug (p. 8) to connect funnel to flask.
9. Wash the residue from the beaker into the funnel with 84% HNO_3, repeating the washing several times.
10. Dissolve the salt through the funnel into a clean flask with hot water, transfer the solution to a beaker, evaporate to dryness and repeat the dissolving, precipitating, and filtering.
11. Again dissolve the salt through the funnel with hot water into a clean flask. Transfer the solution to a beaker and evaporate to dryness on a steam bath.
12. Dry the $Pb(NO_3)_2$ crystals at 130-140°C in an electric drying oven, preferably overnight.

Graphite Pocket

1. Follow instructions in General Procedures for recovery from graphite pocket.

2. Extract the lead from the graphite pieces prior to igniting the graphite in oxygen atmosphere (this pre-ignition extraction step is preferred for lead because of the corrosive action of the metal and its oxide). If the sample is small, transfer the broken graphite to an extra large Soxhlet extractor and extract with 1:2 HNO_3 for 24 hr; decant solution and wash graphite with water; reserve lead-containing leach solution and washings; dry graphite and transfer to a quartz boat. If the sample is large, cover the graphite pieces with 1:1 HNO_3 and allow to stand until reaction subsides; digest mixture on a steam bath preferably overnight, allow solid to settle, decant supernate, wash residue with water, and transfer residue to quartz boat; reserve lead-containing solution.
3. Ignite boat and contents at ~750°C in a horizontal Vycor tube heated by an electric furnace. Continue oxidation process until the carbon has been consumed.
4. Cool the boat, digest the ash in 1:1 HNO_3, and dilute the solution sufficiently to filter through paper into the solution from Step 2.
5. Concentrate the total solution until the HNO_3 concentration is ~20 vol %.
6. Electrolyze between platinum electrodes at ~1 amp, with stirring, to remove copper impurity at the cathode and concentrate lead at the anode.
7. Continue refinement procedure following stepwise directions for recovering lead from copper pocket beginning with Step 4.

Copper-Graphite Pocket

1. Clean the outside of the mixed pocket (copper-graphite) preparatory to recovery by methods previously described for pockets made of copper or graphite.
2. Remove tape from the opening of the pocket and withdraw the graphite striking pad. Separate the carbon top from the main body of the receiver and scrape material from the surface with stainless steel spatula. Transfer dry lead-bearing material to a clean quartz boat.

3. Extract lead from copper surfaces by prying and scraping and by leaching with hot concentrated HNO_3. Digest until soluble portions are in solution. Cool solution, dilute sufficiently to filter through paper, and transfer paper and contents to the quartz boat which contains the lead-bearing materials removed from the graphite surface. Reserve lead-containing filtrate.
4. Transfer the boat to a horizontally mounted 5-in. Vycor tube and heat slowly to 750°C in a rapid oxygen flow using an electric tube furnace. It is advantageous to (1) heat Vycor tube and contents overnight at ~300°C, (2) raise the temperature in 100° increments, and (3) follow the tube with a glass bubbler containing 1:1 HNO_3 to trap any volatile gases which contain lead.
5. Dissolve the resulting ash in 1:1 HNO_3 and combine the solution with the lead-containing filtrate from Step 3.
6. Refine the lead to $Pb(NO_3)_2$ following the procedures listed for recovery and refinement from copper pockets, starting with Step 2.

OSMIUM

Isotope	Natural abundance, atom %	Isotope	Natural abundance, atom %
^{184}Os	0.018	^{189}Os	16.1
^{186}Os	1.59	^{190}Os	26.4
^{187}Os	1.64	^{192}Os	41.0
^{188}Os	13.3		

INVENTORY FORM: Os

Graphite Pocket

1. See Appendix A for safety precautions.
2. Follow General Procedures for recovery from graphite pocket.
3. Transfer graphite pieces to a quartz boat and place the boat and contents in a 2-in. quartz tube in an electric tube furnace.
4. Connect ground-glass outlet of quartz tube to a series of four absorption traps, the first two traps containing 100 ml 48% HBr, the third containing 100 ml 24% HBr, and the last of the series containing a dilute solution of alcoholic NaOH.
5. Feed oxygen through a water bubbler to the quartz tube inlet as the temperature is gradually raised to 300-350°C (after 20 min at this temperature range, a red color begins to appear in the first trap indicating that OsO_4 is being generated and absorbed).
6. Increase furnace temperature slowly (over a period of 5-6 hr) to 700°C. Continue heating at this temperature overnight. Practically all osmium will be collected in the first two traps.
7. Cool furnace to <300°C to stop oxidation and flush tube with nitrogen.
8. Replace first trap, re-establish oxygen flow, and raise furnace temperature to 800°C. Continue oxidation until graphite is completely ashed and all OsO_4 is flushed into traps.
9. Remove traps and discard NaOH solution from fourth trap (photometric analyses show no osmium reaches this solution).

10. Combine all HBr trap solutions and evaporate to near dryness on steam bath.
11. Dissolve the moist residue in a minimum of hot concentrated HCl, dilute the solution (dilute as much as possible--approximately double the volume--but maintaining clear solution; excessive dilution should be avoided to prevent hydrolysis), and filter through a medium-frit glass funnel.
12. Heat the osmium-containing filtrate to boiling and precipitate hydrated OsO_2 by adding saturated $NaHCO_3$ solution to a pH of 6 (continued boiling for 5 min after addition of $NaHCO_3$ aids coagulation).
13. Centrifuge and decant. Wash precipitate with 1% NH_4Cl until the flame test for sodium is negative.
14. Wash precipitate with saturated NH_4Cl to prevent ignition during subsequent hydrogen reduction.
15. Heat OsO_2 at low temperature until barely dry and transfer to quartz boat which is placed in a trapped quartz system in an electric tube furnace.
16. Flush system with CO_2 prior to admitting moderate flow of H_2 and heat sample to 900°C over a period of 2-3 hr. Hold at this temperature until reduction to osmium metal appears complete (usually ~2 hr for 10 g osmium).
17. Cool system to room temperature and dispel H_2 from tube by flushing with CO_2 without interrupting gas flow.

PALLADIUM

Isotope	Natural abundance, atom %	Isotope	Natural abundance, atom %
^{102}Pd	0.96	^{106}Pd	27.33
^{104}Pd	10.97	^{108}Pd	26.71
^{105}Pd	22.23	^{110}Pd	11.81

INVENTORY FORM: Pd

Graphite Pocket

1. Follow General Procedures for recovery from graphite pocket.
2. Transfer the carbonaceous material to a quartz boat; then with boat and contents in a horizontal quartz or Vycor tube ignite in oxygen at 750-800°C. Continue oxidation until graphite is completely consumed.
3. Remove the boat from the ignition tube and allow boat and residue to cool. Cover the residue with HCOOH to reduce the PdO formed in the ignition process to palladium metal (this permits faster dissolution). Evaporate to dryness at low heat.
4. Wash the residue into a Pyrex beaker with water, and with hot 1:1 HNO_3 if necessary.
5. Evaporate the wash solutions to near dryness and add ~25 ml aqua regia to dissolve the moist residue. Successive additions of aqua regia, and applications of low heat, may be required to completely dissolve the palladium.
6. Evaporate the solution to low volume and remove HNO_3 by repeated additions and evaporations of concentrated HCl. Dropwise addition of HCOOH to the hot solution until no new red vapors are formed indicates complete removal of HNO_3.
7. Adjust the volume to a pH of 0.60 and filter through Whatman No. 42 paper to remove silica and other insoluble material.
8. Precipitate palladium from the filtrate by the addition of 1.5% dimethylglyoxime/ethyl alcohol solution at room temperature.

9. Allow the precipitate to settle, then filter on a medium-frit glass funnel. Wash the precipitate with 2% HCl, then with water, and finally with CH_3CH_2OH.
10. Dissolve the palladium dimethylglyoxime, $Pd(C_4H_7O_2N_2)_2$, through the fritted funnel with hot 1:1 HNO_3 using suction. Add the acid slowly to prevent a rapid reaction and subsequent boilover. (Palladium dimethylglyoxime is commonly used in the determination of palladium, and it can be weighed directly after drying at 110°C. The compound can be ignited directly to the metal, which is the preferred inventory form, but volatility losses result if not done slowly and carefully. The metal can be ignited without loss; hence, the $Pd(C_4H_7O_2N_2)_2$ should be dissolved, with subsequent precipitation of the metal.)
11. Transfer the filtrate to a beaker and evaporate to dryness on a steam bath. Decompose organic matter by boiling with small additions of concentrated HNO_3.
12. Cool residue and add concentrated H_2SO_4; heat to remove excess HNO_3. Cool and adjust volume to a H_2SO_4 concentration of ~0.25 M.
13. Add filtered NH_4OH slowly, with stirring, until solution is slightly alkaline, then HCOOH until slightly acidic. Heat to boiling to coagulate and precipitate palladium metal.
14. Wash the palladium onto Whatman No. 42 filter paper with 1% $NH_4C_2H_3O_2$. Use a stirring rod and small pieces of filter paper to remove any palladium which adheres to the beaker. Wash paper with hot 1% $NH_4C_2H_3O_2$.
15. Transfer the paper and contents to a Vycor crucible and ignite slowly up to 700°C in an oxygen atmosphere to decompose carbonaceous matter.
16. After cooling, moisten the palladium sample with HCOOH and heat the crucible to 85°C until the sample is dry.

PLATINUM

Isotope	Natural abundance, atom %	Isotope	Natural abundance, atom %
^{190}Pt	0.012	^{195}Pt	33.7
^{192}Pt	0.78	^{196}Pt	25.4
^{194}Pt	32.8	^{198}Pt	7.23

INVENTORY FORM: Pt

Graphite Pocket

1. Follow General Procedures for recovery from graphite pocket.
2. Transfer the carbonaceous material to a quartz boat; then with boat and contents in a horizontal quartz tube ignite in a stream of oxygen at 650°C. Continue oxidation until all graphite is consumed.
3. Remove boat from ignition tube and allow boat and ash to cool. Dissolve the ash in aqua regia and evaporate solution to near dryness in the presence of excess HCl to remove nitrates.
4. Repeat alternate moistening with concentrated HCl and drying to remove any residual nitrate.
5. Dissolve residue in 1 M HCl with gentle warming.
6. Filter solution through 7-cm Whatman No. 42 paper to remove silica, washing residue carefully with water.
7. Evaporate filtrate slowly to a volume of ~100 ml; cool solution.
8. Precipitate platinum from the filtrate by the addition of solid NH_4Cl. Dilute supernatant liquid with a volume of 95% CH_3CH_2OH equal to total volume of liquid.
9. Allow to stand for 24 hr to ensure complete precipitation of yellow ammonium tetrachloroplatinate(II).
10. Filter on Whatman No. 42 paper and wash the $(NH_4)PtCl_4$ residue with 20% NH_4Cl.
11. Dry the residue in porcelain and ignite carefully by heating to 800°C in a muffle furnace.
12. Place the resulting platinum sponge in a quartz tube and ignite in H_2 at 600°C to constant weight.

POTASSIUM

Isotope	Natural abundance, atom %
^{39}K	93.08
^{40}K	0.0119
^{41}K	6.91

INVENTORY FORM: KCl

Copper-Graphite Pocket ^{39}K sample

1. Consult Appendix A for safety precautions.
2. Follow first step of General Procedures for recovery from copper pocket. A cellulose sponge cut 1 to 1 1/2 in.^{2} and moistened with cleaning liquid makes a convenient cleaning material.
3. Remove graphite striking pad and transfer it to a beaker to be leached with water, then with 1:1 HNO_3.
4. Place the pocket in a large Pyrex tray and flush the inside with water until the potassium has reacted to completion; then add 1:1 HNO_3 to remove the black deposits. Transfer solution to a Pyrex beaker. Removal of black deposits is facilitated by using a rubber policeman while the acid is directed onto the deposit from a rubber-bulb pipette. It can be assumed that all potassium has been removed when the copper metal remains shiny after the addition of HNO_3.
5. Clean the inside surfaces of the baffle plate in the same manner that the pocket was cleaned; add leach solution to solution from Step 4.
6. Remove the graphite pad from the beaker and break into pieces small enough to fit into an extra large Soxhlet extractor; extract for ~24 hr with 1:1 HNO_3.
7. Combine this solution with leach solutions from Steps 4 and 5 and digest on hot plate at low heat until solution is complete. Filter through Whatman No. 42 paper, using a platinum filter cone and gentle suction.

8. Evaporate to dryness, using a hot plate and finally a steam bath, to remove excess HNO_3. Gentle heating on the steam bath prevents formation of a residue which is difficult to dissolve in a small quantity of acid.
9. Dissolve the residue in water and as little HNO_3 as necessary to ensure complete dissolution. Electrolyze between platinum electrodes at ~1 amp until all copper has been removed. Completeness of deposition can be determined by adding a few milliliters of water and checking the clean platinum surface for copper.
10. Evaporate the solution to near dryness and decompose the NO_3^- by repeated evaporations with concentrated HCl, and finally with HCOOH and HCl.
11. Dilute the resulting chloride solution with water and saturate with H_2S. Digest to near boiling and filter. Make the filtrate alkaline with filtered NH_4OH and again saturate with H_2S, digest, and filter. Wash the precipitate with 1:10 $(NH_4)_2S$.
12. Acidify the filtrate with concentrated HCl and boil to liberate H_2S and coagulate the elemental sulfur. Filter on Whatman No. 42 paper, boil the filtrate to near dryness, and add aqua regia to eliminate the ammonium salts.
13. Add a few milliliters of dilute $BaCl_2$ to precipitate any sulfate formed by oxidation of sulfur and filter on paper to remove $BaSO_4$ precipitate.
14. Add $HClO_4$ to the filtrate and evaporate to fumes of $HClO_4$. Cool, dissolve perclorate salts in water, and filter on paper to remove silica. Repeat addition and evaporation of $HClO_4$. Dilute with volume of water equal to volume of solution, cool solution to 0°C, and add 100% CH_3CH_2OH equal to total volume of solution.
15. Allow the precipitate to settle for ~15 min and filter on medium-frit glass funnel. Use cold CH_3CH_2OH containing 0.2% $HClO_4$ for washing into and on the funnel.
16. Dissolve the $KClO_4$ through the frit with hot water and transfer the solution to a Vycor dish. Evaporate solution to dryness and heat residue slowly to 653°C, the melting point of $KClO_4$. Continue heating to 700°C after most of the bubbling has ceased to ensure complete decomposition to KCl. A loose fitting platinum

lid is desirable to prevent spattering losses. Molten $KClO_4$ is extremely corrosive and tends to attack any kind of container.

17. Cool and dissolve KCl in a minimum of water; filter solution through Whatman No. 42 paper to remove silica. Evaporate solution to dryness and dry the KCl in drying oven at 150°C.

Copper Pocket ^{40}K and ^{41}K samples

1. Follow first step of General Procedures for recovery from copper pocket.
2. Dissolve the potassium from the inner surfaces of the pockets with water, followed by hot 1:1 HNO_3. Continue leaching until copper stays bright after addition of clean HNO_3.
3. Digest solution at low heat until all copper has dissolved; filter on Whatman No. 42 paper.
4. Evaporate filtrate to dryness, using a hot plate and finally a steam bath, to remove excess HNO_3.
5. Dissolve residue in water and a minimum of HNO_3 and electrolyze between platinum gauze electrodes to remove copper and lead.
6. Remove electrodes, add 10-15 ml $HClO_4$, and evaporate to dryness. Dissolve salts in water, add 2 ml $HClO_4$, and electrolyze with a mercury cathode and a platinum anode at ~0.15 amp/cm^2.
7. Transfer the solution from the cell to a beaker and evaporate to low volume; then transfer to a small quartz container, evaporate to dryness, and heat slowly to 700°C. Discontinue heating as soon as all $KClO_4$ has decomposed to KCl.
8. Dissolve KCl in a minimum of hot water, filter through 7-cm Whatman No. 42 paper, evaporate filtrate to low volume, transfer to tared 1-dr sample vial, and complete evaporation of water. Dry KCl in drying oven at 150°C.

RUTHENIUM

Isotope	Natural abundance, atom %	Isotope	Natural abundance, atom %
^{96}Ru	5.47	^{101}Ru	17.10
^{98}Ru	1.84	^{102}Ru	31.70
^{99}Ru	12.77	^{104}Ru	18.56
^{100}Ru	12.56		

INVENTORY FORM: Ru

Graphite Pocket

1. Follow General Procedures for recovery from graphite pocket.
2. Ignite cleaned graphite pockets in an excess of oxygen at 650°C in a silica boat within a Vycor tube using an electric tube furnace. Trap the gases in 1:1 HCl containing SO_2.
3. Dissolve the residue from the ignition by fusing with 5 parts KOH:1 part KNO_3 in a silver container at ~600°C.
4. Dissolve the melt with water in plastic, remove the silver container, and strongly acidify solution with concentrated HCl.
5. Digest at steam bath temperatures, dilute by adding trap solution, and filter through Whatman No. 42 filter paper. Reserve solution.
6. Wash residue with hot water to remove Cl^-. Ignite the paper and fuse the residue in a small quantity of 5:1 KOH-KNO_3 as before; dissolve the melt in water, acidify with HCl, and filter into main solution from Step 5.
7. Evaporate the solution to near dryness, add ~10 ml concentrated H_2SO_4, and evaporate to heavy fumes of SO_3. Add ~100 ml water and transfer slurry to all-glass distillation setup (Fig. 4) (ground glass joints should be lubricated with H_2SO_4).
8. Add 100 ml filtered 10% $NaBrO_3$ to the three-neck distillation flask through the thistle tube inlet and heat the solution gently to boiling while pulling filtered air over the solution.

ORNL-DWG 70-6509

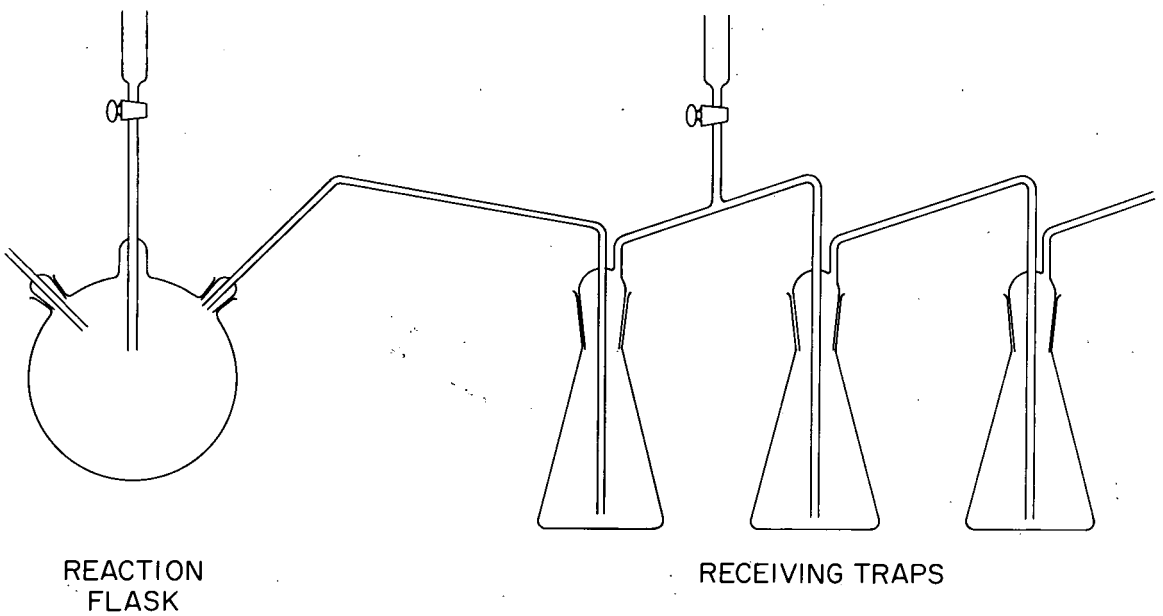

Fig. 4. Ruthenium Distillation Equipment.

9. Trap RuO_4 in 1:1 HCl saturated with the reductant SO_2, using three traps. Add 6% H_2SO_3 to the first two traps as the distillation proceeds.
10. Transfer the trap solutions to a beaker (under a fume hood) and evaporate to a moist residue on the steam bath. Add sufficient 1:1 HCl to dissolve the residue, dilute the solution, and filter on paper to remove silica.
11. Evaporate the filtrate to near dryness on the steam bath, add ~10 ml concentrated H_2SO_4, and heat until all HCl has been eliminated. Dilute sufficiently to filter on paper and wash residue with 1:20 H_2SO_4. Reserve residue.
12. Precipitate ruthenium from filtrate by saturating solution with H_2S for ~3 hr, allowing to stand overnight or until supernate is colorless.
13. Digest, filter on paper, and wash sulfide with 2% $(NH_4)_2SO_4$ saturated with H_2S.
14. Place the filter paper containing the sulfide residue from Step 11 and the residue from Step 13 containing the major part of the

sample in a Vycor crucible. Cover both papers with crystalline $(NH_4)_2SO_4$ to prevent deflagration of the sulfide during ignition. Dry slowly; then ignite carefully to 700°C.

15. Transfer sample to a Vycor boat placed in a horizontal position and heated by an electric tube furnace. Reduce with dry H_2, finally at 800°C, to ruthenium metal. Cool under H_2 to room temperature.

STRONTIUM

Isotope	Natural abundance, atom %
^{84}Sr	0.56
^{86}Sr	9.86
^{87}Sr	7.02
^{88}Sr	82.56

INVENTORY FORM: $Sr(NO_3)_2$

Copper Pocket

1. Follow steps in General Procedures pertaining to copper pocket. Because of the nearness of the ^{87}Sr pocket to the ^{88}Sr pocket in the receiver assembly, the danger of contamination from the high-abundance ^{88}Sr is great. Hence, extreme care must be taken in cleaning the exterior of the ^{87}Sr pocket (actually it has been necessary to remove sections of the graphite pockets to ensure complete removal of contaminant deposits).
2. Evaporate to near dryness (not to a H_2O-insoluble residue) to dispel excess HNO_3, first on a hot plate, then on a steam bath or other low-temperature heating device.
3. Dissolve the moist residue in water and filter through Whatman No. 42 paper.
4. Adjust the filtrate to 20 vol % with HNO_3 and electrolyze the solution between platinum electrodes at ~1 amp while stirring; copper will be deposited at the cathode and any lead present will be deposited simultaneously at the anode. Prior to beginning electrolysis, HNO_2 should be removed by adding ~1 g urea, the urea being added, with stirring, until there is no further evolution of gas. Small additions of CH_3CH_2OH through the course of the electrolysis also will lower the concentration of HNO_2, a compound which interferes with the electrolysis and can completely stop the deposition.

5. Evaporate the electrolyzed solution to a dry residue, dissolve the crystals in a minimum, known quantity of water, and add, with vigorous stirring, fuming HNO_3 until the HNO_3 concentration reaches 80 wt %. Twenty-six milliliters of 100% HNO_3--or 28.1 ml of commercial fuming HNO_3 (density 1.49-1.50 g/ml)--and 10 ml of water containing the $Sr(NO_3)_2$ crystals will give a concentration of 80 wt % HNO_3.
6. Allow the $Sr(NO_3)_2$ crystals to settle for at least 30 min, or until the supernate clears, and filter at reduced pressure on a Pyrex Buchner funnel with medium frit. A tapered Teflon plug with opening slightly larger than stem of funnel should be used instead of rubber stopper to connect filter funnel and vacuum flask.
7. Wash the crystals from the beaker to the funnel with 80% HNO_3 and repeat washing several times with the strong acid.
8. Dissolve the $Sr(NO_3)_2$ through the funnel into a clean flask with hot water, transfer the solution to a beaker, evaporate to dryness and repeat the dissolving, precipitating, and filtering.
9. Again dissolve the salt through the funnel with hot water and collect in a clean flask. Transfer the solution to a beaker and evaporate to dryness on a steam bath. Dry the crystals at 140°C in an electric drying oven, preferably overnight.

Graphite Pocket

1. Follow General Procedures for recovery from graphite pockets, being especially careful in cleaning the exterior of the pocket to avoid contamination of the ^{87}Sr pocket with the high-abundance ^{88}Sr.
2. Extract the strontium from the broken graphite prior to igniting the graphite in oxygen atmosphere (this pre-ignition extraction step is necessary to prevent formation of SrO during the burning of graphite at 750-800°C; at graphite-ignition temperatures SrO is very corrosive to common container materials--for example, quartz or Vycor will turn white and begin to flake with only one

ignition). If the sample is small, transfer the graphite pieces to an extra large Soxhlet extractor and extract with 1:2 HNO_3 for 24 hr; decant solution and wash graphite with water; reserve strontium-containing leach solution and washings; dry graphite and transfer to a quartz boat. If the sample is large, add 2 liters 1:1 HNO_3 to the graphite pieces and allow to stand until reaction subsides; digest mixture on a steam bath, preferably overnight; allow solid to settle, decant supernate, wash residue with water, and transfer residue to quartz boat; reserve strontium-containing solution.

3. Ignite the carbonaceous matter under oxygen in a horizontal Vycor tube heated by an electric furnace until the carbon has been consumed.
4. Cool the boat, digest the ash in 1:1 HNO_3, and dilute sufficiently to filter through paper into the main solution.
5. Concentrate the filtrate until the HNO_3 concentration is ~20 vol % and electrolyze between platinum electrodes at ~1 amp, with stirring, to remove copper or lead impurity.
6. Continue refinement procedure, beginning with Step 4 in the directions for recovery and refinement of strontium from copper pockets.

TANTALUM

Isotope	Natural abundance, atom %
^{180}Ta	0.012
^{181}Ta	99.988

INVENTORY FORM: Ta_2O_5

Graphite Pocket

1. Follow General Procedures for recovery from graphite pocket. Avoid losses of ^{180}Ta-containing dust during scraping by using a steel tool with a vacuum attachment which allows depositing of scraped material in a sintered glass funnel.
2. Transfer collected material to a platinum dish and ignite in a stream of oxygen at 600°C.
3. Dissolve impure Ta_2O_5 by heating in the presence of repeated additions of a mixture of 1 part concentrated HNO_3, 4 parts $(HF)_n$.
4. Dilute solution with water and filter through paper on plastic funnel into another platinum dish.
5. Precipitate tantalum with concentrated NH_4OH, filter, and redissolve residue with 1:1 HCl which is ~1 M in $(HF)_n$, precipitate again with NH_4OH, and filter. Repeat dissolution, precipitation, and filtration until all trace of copper is removed.
6. Dissolve copper-free $Ta(OH)_5$ in 1:1 HCl which is ~1 M in $(HF)_n$ and add an equal volume of 70% $HClO_4$.
7. Boil the solution to strong fumes of $HClO_4$ and cool (tantalum is held in solution only in presence of $(HF)_n$ and precipitates quantitatively from $HClO_4$ as Ta_2O_5).
8. Allow precipitate to settle, decant supernatant liquid, and wash precipitate several times by decantation, first with concentrated HNO_3 and then with dilute HNO_3.
9. Wash precipitate onto Whatman No. 42 filter paper with dilute HNO_3 and repeat acid washings.

10. Transfer residue to a small platinum dish and ignite to 600°C under O_2 in a Vycor tube supported horizontally in an electrically heated tube furnace.

TITANIUM

Isotope	Natural abundance, atom %	Isotope	Natural abundance, atom %
^{46}Ti	7.95	^{49}Ti	5.51
^{47}Ti	7.75	^{50}Ti	5.34
^{48}Ti	73.45		

INVENTORY FORM: TiO_2

Graphite Pocket

1. Follow steps in General Procedures for recovery from graphite pockets.
2. Transfer the broken graphite to a quartz boat, insert boat in a Vycor tube, and ignite contents in oxygen at 750-800°C until all carbonaceous matter is consumed.
3. Transfer the contents of the boat (now mainly TiO_2) to a large platinum dish and dissolve the sample in a mixture of 5 parts concentrated $(HF)_n$, 1 part concentrated H_2SO_4. Titanium(IV) oxide reacts with $(HF)_n$ to form the soluble hexafluorotitanate(IV) ion, TiF_6^{2-}.
4. Heat solution on hot plate until SO_3 fumes are formed (an excess of H_2SO_4 must be present to prevent volatization of TiF_4).
5. Cool the solution, add ~1 ml 30% H_2O_2, and again evaporate to light fumes of SO_3. This procedure eliminates $(HF)_n$ thus allowing the use of glass equipment in subsequent steps.
6. Cool the solution, dilute to 10 vol % H_2SO_4, and filter. Reserve filtrate. If an appreciable amount of titanium-bearing residue remains, it should be ignited in platinum, then fused with 10 parts of $K_2S_2O_7$, the melt extracted with 1 M H_2SO_4, and the solution filtered into the main solution.
7. Add 1:1 NH_4OH to the filtrate from Step 6 until just slightly acid and digest on steam bath until metatitanic acid precipitate forms.

8. Filter through paper and wash residue several times with hot water.
9. Transfer the paper and residue to a Vycor dish and dry carefully to avoid mechanical losses. Char paper; ignite residue in an electric muffle furnace at 550°C to TiO_2.

TUNGSTEN

Isotope	Natural abundance, atom %	Isotope	Natural abundance, atom %
^{180}W	0.135	^{184}W	30.6
^{182}W	26.4	^{186}W	28.4
^{183}W	14.4		

INVENTORY FORM: WO_3

Graphite Pocket

1. Follow steps in General Procedures for recovery from graphite pocket. Although it is frequently possible to obtain SiO_2-coated abrasive cloth and it is sometimes permissible to use this abrasive cloth rather than the Al_2O_3-coated cloth recommended in the General Procedures, it should be noted that SiO_2-coated cloth would increase the chance of contamination of the tungsten sample with silica and its use would require an extra step in the refinement procedure.
2. Transfer graphite pieces to quartz boat; then with boat and contents in a horizontal Vycor tube ignite in a stream of oxygen at 750°C and continue oxidation until graphite is completely consumed (this ignition temperature is a compromise based on literature references which state that WO_3 is volatile above 750°C,[1] above 850°C,[2] above 800°C in vacuo,[3] or above 900°C;[4] to test the validity of the 750°C ignition temperature, eight

---

[3]H. H. Willard and H. Diehl, Advanced Quantitative Analysis, p. 218, Van Nostrand, Princeton, N. J., 1943.

[4]N. H. Furman (ed.), Standard Methods of Chemical Analysis, Vol. I, p. 1162, Van Nostrand, Princeton, N. J., 1962.

[5]L. Wohler and O. Balz, Z. Electrochem. 27: 406 (1921).

[6]R. A. Chalmers, Comprehensive Analytical Chemistry, Vol. IC, p. 598, C. L. Wilson and D. W. Wilson (eds.), Elsevier, New York, 1962.

^{186}W collector pockets were ignited at 750°C, the off gases bubbled through a water trap, the ignition tube washed with concentrated NH_4OH, and the wash solutions added to trap solution and analyzed for tungsten; none was detected).

3. Transfer the WO_3-containing residue, in ~25 g lots, to 1000 ml plastic beakers, add to each beaker ~750 ml of concentrated NH_4OH which has been filtered, immerse each beaker in a steam bath, and digest the solution. Cover the beaker with a flat plastic lid, using a lead weight to hold the lid in place and to keep the beaker from tipping as the volume decreases.
4. Continue digestion until ~250 ml of solution evaporates (this should remove most of the NH_3 since commercial NH_4OH is 28 wt % NH_3).
5. Remove the beaker from the steam bath, refill the beaker with concentrated NH_4OH to the original level, and resume digestion on the steam bath. Usually two additions of NH_4OH and a digestion period of 8 hr are required to effect solution of the WO_3 (re-ignition and retreatment with NH_4OH may be repeated should a small amount of WO_3 remain undissolved after the prescribed treatment; should this procedure fail to effect complete solution, the WO_3 can be dissolved by fusion with 8 parts of Na_2CO_3 at 850°C in a platinum container, but this is to be avoided if possible since alkali metal ions prevent complete precipitation of tungsten as tungstic acid or with cinchonine reagent; if fusion is necessary, tannin reagent should be used in conjunction with cinchonine[7]).
6. Filter the alkaline solution through Whatman No. 42 paper to separate any insoluble material (plastic equipment should be used with alkaline solutions to avoid silica contamination). Reserve $(NH_4)_2WO_4$-containing filtrate.
7. Heat ~250 ml of concentrated HNO_3 to near boiling on a hot plate, remove from hot plate, and add the $(NH_4)_2WO_4$ solution from Step 6

---

[7]G. E. F. Lundell, H. A. Bright, and J. I. Hoffman, Applied Inorganic Analysis, p. 685, John Wiley and Sons, New York, 1953.

while stirring to precipitate yellow H_2WO_4. The use of a hot solution of HNO_3 prevents the formation of white $H_2WO_4 \cdot 2H_2O$, which is slightly soluble in HNO_3 and is difficult to filter and wash.

8. Digest the H_2WO_4-containing mixture on a steam bath for 20-30 min to flocculate the finer particles. The color of the residue usually changes from a light yellow to a dark yellow during digestion.
9. Cool, decant the clear liquid, and wash the H_2WO_4 residue onto Whatman No. 42 filter paper with 10 vol % HNO_3. Reserve residue.
10. Combine the decanted liquid from Step 9 and the acid filtrate from Step 9. Evaporate to approximately one-half the original volume on a steam bath. Tungstic acid, H_2WO_4, crystallizes and most of it plates out on the sides and bottom of the beaker during the evaporation.
11. Filter the mixture on paper, being careful to wash the beaker and the plated H_2WO_4 as well as the loose H_2WO_4 residue with 10% HNO_3, then with distilled water.
12. Dissolve the plated H_2WO_4 in concentrated NH_4OH and repeat the precipitation with concentrated HNO_3 as in Step 7. Filter on paper and collect the acid filtrate and wash solution in a single beaker. Add ~5 ml cinchonine solution (prepared by dissolving 125 g cinchonine in a liter of 1:1 HCl) to the acid solution to form a precipitate, heat at a temperature just below boiling for at least 30 min, and cool to allow precipitate to settle. Add some ashless paper pulp to the solution and transfer the precipitate to a small filter paper using a hot cinchonine wash solution.[8]
13. Collect filter papers containing H_2WO_4 residue and those containing cinchonine precipitate. Ignite in Vycor dish at 750°C to WO_3.

---

[8]G. E. F. Lundell, H. A. Bright, and J. I. Hoffman, Applied Inorganic Analysis, p. 61, John Wiley and Sons, New York, 1953.

ZIRCONIUM

Isotope	Natural abundance, atom %	Isotope	Natural abundance, atom %
^{90}Zr	51.46	^{94}Zr	17.40
^{91}Zr	11.23	^{96}Zr	2.80
^{92}Zr	17.11		

INVENTORY FORM: ZrO_2

Copper Pocket

Follow procedure outlined for recovery and refinement of hafnium from copper pockets (the chemistry of zirconium is so nearly the same as that of hafnium that one recovery and refinement procedure serves for both elements).

Graphite Pocket

Follow procedure for recovery and refinement of hafnium from graphite pockets.

APPENDIX A: HEALTH AND SAFETY HAZARDS

BARIUM

The soluble barium salts,[9] such as $BaCl_2$ and BaS, are poisonous when taken by mouth. The insoluble $BaSO_4$ used in radiography is non-poisonous. Few cases of industrial systemic poisoning have been reported, but one investigator[9] describes a fatal case of poisoning attributed to BaO, the symptoms being abdominal pain with vomiting, dyspnea, rapid pulse, paralysis of the right arm and leg, and eventually cyanosis and death. The same investigator produced paralysis in animals with BaO and $BaCO_3$. The usual result of exposure to the sulfide, oxide, and carbonate is irritation of the eyes, nose, throat, and of the skin, producing dermatitis; these salts are somewhat caustic.

Barium metal dust is a moderate fire hazard when exposed to heat or flame or by chemical reaction.

---

[9]N. I. Sax, Dangerous Properties of Industrial Material, p. 332, Reinhold Publishing Corp., New York, 1957.

CADMIUM

Even though increased attention has been devoted to the hygienic significance of cadmium, there are cases of poisoning, usually of unsuspected origin, which appear with sufficient frequency to re-emphasize the fact that cadmium is a potentially dangerous substance.[10] The careless use of cadmium-coated vessels as food or beverage containers has caused many cases of cadmium poisoning, the majority of which have occurred since January 1941. During the 5-year period, 1941 to 1946, 689 cases of cadmium poisoning by ingestion were reported.

The symptoms of cadmium poisoning produced by ingestion are increased salivation, choking attacks, persistent vomiting, abdominal pain, diarrhea, and tenesmus. The significant feature of cadmium poisoning by ingestion is the rapidity of physiological response. Usually individuals are affected within 15 to 30 min after ingestion of food or drink containing toxic quantities of cadmium. This in itself should be suggestive in cases of so-called food poisoning.

Fatalities from cadmium poisoning have resulted most often from the fumes of CdO rather than the ingestion of cadmium salts. Unfortunately, CdO fumes have no pronounced odor or immediate irritant effect and can be breathed in fatal concentrations without enough discomfort to drive the worker away from the exposure. Barrett and his associates[11] have made an extensive investigation of the physiological effects of exposure to cadmium and have determined the LD_{50} dose for a number of species of animals and the type of pathological effect produced by such exposure. They estimate that the lethal dose of thermally generated CdO for man is probably not over 2900 min/mg/m^3.

Even though cadmium is toxic, especially if inhaled as fumes of CdO, it is not expected to constitute a serious hazard in isotopic recovery-refinement techniques since there are few conditions where cadmium might be inhaled.

---

[10] L. T. Fairhall, Industrial Toxicology, 2nd ed., pp. 30-33, The Williams and Wilkins Co., Baltimore, 1957.

[11] H. M. Barrett, D. A. Irwin, and E. Jemmons, "Studies on the Toxicity of Inhaled Cadmium, I. The Acute Toxicity of Cadmium Oxide by Inhalation," J. Ind. Hyg. Toxicol. 29: 279 (1947).

CERIUM

The insoluble salts of cerium, such as the oxalate, are stated to be nontoxic even in large doses, but a few of the soluble salts, such as the tartrate and chloride, do produce injurious action on the heart and smooth muscle of the intestines, respectively, if ingested directly.[12] However, adsorption of cerium salts following oral administration is only slight, and cerium is excreted exclusively by the gastrointestinal tract.

Little or no difficulty is anticipated in being able to handle cerium safely during isotopic recovery and refinement procedures.

---

[12]L. T. Fairhall, Industrial Toxicology, 2nd ed., pp. 33-35, The Williams and Wilkins Co., Baltimore, 1957.

CHLORINE

Chlorine[13] is extremely irritating to the mucuous membranes of eyes and respiratory tract. It combines with moisture to liberate nascent oxygen and form HCl. Both of the substances, if present in quantity, cause inflammation of the tissues with which they come in contact. If the lung tissues are attacked, pulmonary edema may result. A concentration of 3.5 ppm produces a detectable odor; 15 ppm, immediate irritation of the throat. Concentrations of 50 ppm are dangerous, even for short periods, and 1000 ppm may be fatal, even where the exposure is brief.

The toxicity of chlorides varies widely. For example, NaCl has very low toxicity, while $COCl_2$ (phosgene) is lethal in small doses. Of the metal chlorides usually encountered in isotope refinement procedures (copper, magnesium, cadmium, silver, sodium), only $CdCl_2$ poses a serious hazard if inhaled or ingested.

---

[13]N. I. Sax, Dangerous Properties of Industrial Materials, pp. 461, 463-4, Reinhold Publishing Corp., New York, 1957.

CHROMIUM

The toxic action of chromium is confined to the hexavalent compounds of chromium.[14] Neither the metal nor the trivalent salts shows this toxic effect.

Chromic acid and its salts[15] have a corrosive action on the skin and mucous membranes. The lesions are confined to the exposed parts, affecting chiefly the skin of the hands and forearms and the mucous membranes of the nasal septum. The characteristic lesion is a deep, penetrating ulcer, which, for the most part, does not suppurate, and which is slow in healing.

Small ulcers, about the size of a match head or end of a lead pencil, may be found chiefly around the base of the nails, on the knuckles, and on the dorsum of the hands and forearms. These ulcers tend to be clean and progress slowly. They are frequently painless even though quite deep. They heal slowly and leave scars. On the mucous membrane of the nasal septum the ulcers are usually accompanied by purulent discharge and crusting. If exposure continues, perforation of the nasal septum may result but produces no deformity of the nose. Chromate salts have been associated with cancer of the lungs.

Chromium trioxide (or chromic acid) constitutes both a fire and explosion hazard because of its excellent oxidizing properties. With organic matter, CrO_3 causes violent reactions; with reducing agents, it can cause violent explosions.

---

[14] L. T. Fairhall, Industrial Toxicology, 2nd ed., p. 37, The Williams and Wilkins Co., Baltimore, 1957.

[15] N. I. Sax, Dangerous Properties of Industrial Materials, pp. 484, 486, Reinhold Publishing Corp., New York, 1957.

HAFNIUM

Sax[16] states that the toxicity of hafnium metal, the carbide, oxide, and oxychloride is unknown (see discussion on zirconium, Appendix A, page 71). Hafnium metal in the finely divided state is a distinct safety hazard because of its comparatively low ignition temperature. Knoll[17] has reported that hafnium, freshly prepared in vacuo, is so reactive that no deoxidizers for it are known.

Since hafnium metal is highly flammable in the dry state, hafnium powder should be moistened with water to make it safer to handle. Like other finely divided metals, the powder produces an explosive mixture in the presence of oxidizing agents such as $Ba(NO_3)_2$ or $KClO_3$.

---

[16] N. I. Sax, Dangerous Properties of Industrial Materials, p. 746, Reinhold Publishing Corp., New York, 1957.

[17] W. J. Knoll, "Production and Uses of Rare Metals," Mining and Met. 27: 262-6 (1946).

INDIUM

Indium is toxic on subcutaneous injection in amounts of from 7-30 mg/kg body weight[18] or on intravenous injection, but it cannot be said to have a sufficiently high toxicity rating to be of any great industrial significance. In animals large quantities of the hydroxide ingested over a period of 2 weeks show no apparent toxic effect.[19] It has been found that the metal and its salts possess no skin irritant properties.[20]

Indium constitutes only a moderate fire hazard even in the form of dust when exposed to heat or flame.[21]

---

[18]C. P. McCord et al., "The Physiologic Properties of Indium and its Compounds," J. Ind. Hyg. Toxicol. 24: 243 (1942).

[19]W. F. Von Oettingen, "Notes on Toxicity and Pharmacology of Indium," Proc. Soc. Exptl. Biol. Med. 29: 1188 (1932).

[20]L. T. Fairhall, Industrial Toxicology, p. 62, The Williams and Wilkins Co., Baltimore, 1957.

[21]N. I. Sax, Dangerous Properties of Industrial Materials, p. 780, Reinhold Publishing Co., New York, 1957.

LEAD

Lead poisoning[22] is one of the most common occupational diseases. The presence of lead-bearing materials or lead compounds does not necessarily result in exposure to the individual since the lead must be in such a form and must be distributed in such a way that entrance to the body tissues is in measurable quantity. Entry into the body may be by (1) inhalation of dust, fumes, mists, or vapors; (2) ingestion of lead compounds trapped in the upper respiratory tract or introduced into the mouth on food, tobacco, fingers, or other objects; and (3) absorption through the skin. Only organic compounds, such as $Pb(CH_2CH_3)_4$, pose a real hazard by absorption; little danger is involved in this respect in the handling of inorganic forms of lead.

When lead is ingested, much of it passes through the body unabsorbed and is eliminated in the feces. The greater portion of the lead that is absorbed goes to the liver and is partly excreted in the bile. For this reason larger amounts of lead are necessary to cause poisoning by ingestion than by inhalation, and a longer period of exposure is usually necessary to produce symptoms.

When lead is inhaled, absorption takes place easily from the respiratory tract and symptoms develop more rapidly. Hence, from the point of view of industrial poisoning, inhalation of lead is much more hazardous than ingestion of lead. Lead is a cumulative poison; increasing amounts build up in the body and eventually a point may be reached where symptoms and disability occur.

Lead metal is only a moderate fire and explosion hazard even though the metal is known to be pyrophoric in the finely divided state. However, it is dangerous when heated because it emits highly toxic fumes that can react vigorously with oxidizing materials. Essentially the same dangers apply to lead compounds.

Lead-210 is a naturally occurring radioactive isotope, primarily found in uranium-bearing minerals and ores. The half-life for ^{210}Pb is

---

[22] N. I. Sax, Dangerous Properties of Industrial Materials, pp. 817-19, Reinhold Publishing Corp., New York, 1957.

22 years; it is a beta emitter (0.028 meV) and a gamma emitter (0.008, 0.046 meV). Like other lead isotopes, it is a bone-seeker, and its daughters, ^{210}Bi and ^{210}Po, may cause excessive irradiation of the blood-forming organs. All three are encountered in processing radiogenic lead.

OSMIUM

Metallic osmium is innocuous, but osmium(VIII) oxide, OsO_4, has long been recognized as dangerous because of its irritating effect.[23] One authentic fatal case reported by Raymond in 1874 resulted from the inhalation of OsO_4 which gave rise to a capillary bronchitis. The "halo around lights" is a characteristic symptom of exposure to the tetroxide resulting from the irritation of the eyes. The principal effects of exposure are those of occular disturbances, an asthmatic condition resulting from inhalation, and a dermatis and ulceration resulting from skin contact.

The one step in the chemical recovery and refinement of osmium isotopes of particular hazard to the chemist is the ignition of osmium-bearing graphite in oxygen because OsO_4 is formed. The following precautions are recommended: (1) the oxidation should be carried out in a closed system (i.e., an efficient chemical trapping system should be used for off-gases), (2) the tube furnace and accessory equipment should be installed in a fume hood, and (3) all joints involved in the ignition system should be made of glass or quartz and checked constantly for leaks.

---

[23] L. T. Fairhall, Industrial Toxicology, 2nd ed., p. 87, The Williams and Wilkins Co., Baltimore, 1957.

PALLADIUM

"No cases of industrial poisoning from palladium have been reported in the literature of industrial hygiene."[24]

---

[24]L. T. Fairhall, Industrial Toxicology, p. 126, The Williams and Wilkins Co., Baltimore, 1949.

PLATINUM

Dusts of metallic platinum and dusts or sprays of certain salts of platinum (such as the chloroplatinates) are very irritating to the respiratory system. These dusts or sprays cause sneezing, tightness of chest, shortness of breath, running of the nose, cyanosis, and cough.[25]

However, these same forms appear to have no hygienic significance. Therefore, no health hazard is anticipated in the chemical recovery and refinement of separated platinum isotopes.

---

[25] L. T. Fairhall, Industrial Toxicology, 2nd ed., pp. 94-5, The Williams and Wilkins Co., Baltimore, 1957.

POTASSIUM

Most salts of potassium are non-toxic[26] even in fairly high concentrations. An exception is KCN which readily reacts with water to produce HCN. The major hazard encountered in handling potassium and its salts is with the extremely reactive metal itself.

Metallic potassium reacts vigorously with oxygen, with water even at -100°C, and with acids to release hydrogen instantaneously. It reacts vigorously with the halogens, igniting with bromine and iodine. The molten metal reacts with sulfur and with H_2S. It reacts with hydrogen slowly at 200°C, rapidly at 350 to 400°C.

Suitable handling procedures should be reviewed prior to each separation series to acquaint the chemist with past practices and with any new variable. On two separate occasions (once accidental, the second intentional) the potassium-39 isotope collector exploded during careful disassembly. The following precautions were suggested as methods to avoid future difficulties with the metallic deposits:

1. Devise a plastic box or cover fitted with portholes into which the collector assembly is placed immediately upon withdrawal from the calutron tank.

2. Dismantle the receiver assembly inside the plastic box and transport the individual collector pockets to the laboratory in a protective enclosure.

3. Process the receiver pockets chemically behind an explosion-proof shield as soon as feasible using conventional techniques.

4. Use safety equipment, such as gloves, respirator, and safety glasses when starting chemical recovery from the collector pockets.

---

[26] P. G. Stecher (ed.), The Merck Index of Chemicals and Drugs, p. 836, Merck and Co., Inc., Rahway, New Jersey, 1960.

RUTHENIUM

Of the chemical forms of ruthenium encountered in a recovery and refinement procedures, only the tetroxide is said to be hazardous.[27] Ruthenium(VIII) oxide, RuO_4, is a powerful oxidizing agent and as such constitutes a moderate fire hazard if permitted to react with reducing agents. Its toxicity is not well known because of its limited industrial use, but it is said to be injurious to the eyes and lungs.

---

[27]N. I. Sax, Dangerous Properties of Industrial Materials, p. 1088, Reinhold Publishing Corp., New York, 1957.

STRONTIUM

Strontium is similar to calcium in its chemical and physiological properties and, like calcium, is a bone seeker when soluble forms are ingested or when injected intraveneously.[28] The two are also quite similar in the metallic state, both giving hydrogen in their reactions with acids. The usual salts of strontium (also like calcium) are relatively innocuous from a toxicity view even when ingested in quantities up to 250 mg.

The major hazard in handling strontium through chemical recovery and refinement procedures is expected to be with dissolution of the metallic deposit in the collector pockets.

---

[28] L. T. Fairhall, Industrial Toxicology, 2nd ed., pp. 110-111, The Williams and Wilkins Company, Baltimore, 1957.

TANTALUM

So far no experimental work has been reported which indicates that tantalum or its compounds produce any unfavorable effects.[29]

---

[29]L. T. Fairhall, Industrial Toxicology, 2nd ed., pp. 119-120, The Williams and Wilkins Co., Baltimore, 1957.

TITANIUM

In 1930, Carozzi,[30] after reviewing the literature, concluded that because of its chemical inertia, TiO_2 is not toxic.[31] Later, Déribéré[32] described the properties of various titanium salts with regard to solubility, acidity, and action on the skin and concluded that some could be used therapeutically for various skin conditions.

The metal is quite reactive to oxygen at a red heat, especially so when the metal is finely divided. For example, in one instance a 10-mg sample of finely-divided titanium blew the end out of a quartz reactor when the titanium was being oxidized at elevated temperatures with pure oxygen.

Titanium(IV) chloride, the preferred charge material in isotopic separations, is irritating and corrosive[33] since it hydrolyzes to HCl when exposed to moisture.

Any toxicity of titanium organic compounds can usually be attributed to the organic constituents, and the dangers in handling can be established by checking the toxicity of the parent organic substance.

The only precautions needed in handling isotopically enriched samples of titanium are in igniting graphite collector pockets which possibly contain finely divided titanium metal.

---

[30] L. Carozzi, Occupation and Health, Vol. II, p. 1058, International Labor Office, Geneva, 1930.

[31] L. T. Fairhall, Industrial Toxicology, 2nd ed., pp. 126-8, The Williams and Wilkins Co., Baltimore, 1957.

[32] M. Déribéré, "Les composés du le titane et l'hygiene," Ann. 'hyg. publ. ind. sociale, 18: 133 (1941); Chimie et industrie, 47: 201 (1942).

[33] N. I. Sax, Dangerous Properties of Industrial Materials, p. 1190, Reinhold Publishing Corp., New York, 1957.

TUNGSTEN

Recent experimental work in the Industrial Hygiene Division of the U. S. Public Service has failed to indicate any serious toxic effect[34] following the inhalation or ingestion of various tungsten compounds, although heavy exposure to the dust or ingestion of large amounts of the soluble compounds produces a certain amount of morbidity and mortality.

No health hazards are expected in the recovery and refinement of tungsten isotopes.

---

[34]L. T. Fairhall, Industrial Toxicology, 2nd ed., pp. 128-9, The Williams and Wilkins Co., Baltimore, 1957.

ZIRCONIUM

Zirconium has only a mild pharmacological action[35] and may even lack physiological effect in small amounts.[36] The zirconium compounds used in technical work are, in general, insoluble, and no occupational case of systemic poisoning of man has been reported. The oxide, encountered frequently in isotope collection and refinement, is physiologically inert; in fact, it has been employed medicinally in roentgenography as a substitute for bismuth salts.

Finely divided zirconium metal is a distinct safety hazard because of its low ignition temperature.[37] It is highly flammable in the dry state and burns with an intensely brilliant flame. Ignition temperatures of the dry powder are reported[38] to range from 151 to 160°C, depending on the grade. It may be ignited by heat, static electricity, or simple friction (reportedly even more easily than magnesium powder) and explodes spontaneously when dispersed into the air as a cloud. Like other finely divided metals, the powder will produce an explosive mixture with oxidizing agents such as $Ba(NO_3)_2$ or $KClO_3$.

Zirconium powder moistened with water is much safer than the dry powder; however, if ignited the damp powder burns more violently than the dry. The powder containing 5-10% water is considered the most dangerous if ignited. H. C. Andersen and L. H. Belz[39] studied the activity of sub-sieve zirconium powders by measurements of ignition temperature, burning time, and ignition energy. They reported that a particle diameter of ~10 microns represented the dividing line between hazardous and

---

[35] L. T. Fairhall, Industrial Toxicology, pp. 191-4, The Williams and Wilkins Co., Baltimore, 1949.

[36] L. Lendle, Titanium and Zirkonium in Handbuch der Experimentellen Pharmakologie, Vol. 3, H. Heffter (ed.), J. Springer, Berlin, 1934, O. 1558.

[37] G. L. Miller, Zirconium, 2nd ed., pp. 488-93, Butterworths Scientific Publications, London, 1957.

[38] National Safety Council, Zirconium, Data Sheet D-Chem 45, Chicago, pp. 489, 493.

[39] H. C. Andersen and L. H. Belz, "Factors Controlling the Combustion of Zirconium Powders," J. Electrochem. Soc. 100: 240-9 (1953).

non-hazardous diameter (this did not apply to powders consisting of agglomerates of particles smaller than 10 microns); the presence of residual oxide had no effect on the temperature of ignition--some of the lowest ignition temperatures noted were for incompletely reduced powders.

LABORATORY REAGENTS

Fuming Nitric Acid

Fuming nitric acid should be handled in the fume hood with adequate ventilation. Proper eye protection equipment and rubber gloves should be worn.

Perchloric Acid

Perchloric acid at concentrations of 85% or greater is explosive on standing but is stable indefinitely at 60% or even at 72%. Hot concentrated $HClO_4$ is dangerous in the presence of organic matter and should not be heated in a mixture of organic substances such as alcohols since explosive alkyl perchlorates are formed.

If $HClO_4$ is handled properly with safety precautions observed, there is little risk involved in its use.

APPENDIX B: REMOVAL OF IMPURITIES

BARIUM

Strontium Impurity

Strontium(II) nitrate precipitates quantitatively from 79-81% HNO_3. Thus, if strontium appears in the barium refinement, it will be detected spectrochemically in the product. While it is seldom encountered as an impurity, especially when copper collector pockets are used, if strontium should be detected spectrochemically in the $Ba(NO_3)_2$ product, it can be removed by an additional procedure: (1) the nitrates are dissolved in hot water, the solution is made slightly alkaline with filtered NH_4OH and then slightly acidic with dilute $HC_2H_3O_2$ (for the best strontium separation the concentration should not exceed 0.4 g barium/200 ml solution); (2) an excess of $NH_4C_2H_3O_2$ is added, the solution heated to near boiling, and a slight excess of $(NH_4)_2CrO_4$ solution added; the mixture is digested on a steam bath and the precipitate allowed to settle after testing for complete precipitation; (3) the mixture is cooled and centrifuged, and the residue washed several times with hot water; (4) the chromate residue is dissolved in hot 1:1 HNO_3 and the solution evaporated to near dryness; (5) the residue is dissolved in a minimum, but known, quantity of hot water and the barium is precipitated with fuming nitric acid (see procedure for barium refinement); (6) the dissolving, evaporating, and precipitating are repeated to remove the last trace of the chromate ion, and the $Ba(NO_3)_2$ crystals are collected on a medium-frit glass funnel, washed with 76% HNO_3, and dissolved in hot water; the solution is evaporated to dryness on a steam bath and the residue transferred to a drying oven to dry for 2 hr at 130-140°C.

Lead and Strontium Impurities

If both lead and strontium are detected in the $Ba(NO_3)_2$ product, these impurities should be removed by the following procedure: (1) the $Ba(NO_3)_2$ is dissolved in water and concentrated HNO_3 added to make a

20 wt % HNO_3 solution; the solution is electrolyzed between platinum electrodes, with constant stirring, at ~6 V, and the lead impurity is collected on the anode as PbO_2; (2) the electrodes are removed very carefully and washed with distilled water, and the washings are added to the solution; the solution is evaporated to near dryness to remove excess HNO_3 and the nitrate crystals redissolved in water (if there is any evidence of silicious matter, the mixture should be filtered); (3) at least 10 ml of $NH_4C_2H_3O_2$ reagent (prepared by dissolving 300 g $NH_4C_2H_3O_2$ per liter of solution and followed by neutralization with NH_4OH) is added to the neutral or weakly acidic solution, the solution is heated to boiling, and while stirring, 5 ml of a solution of $(NH_4)_2Cr_2O_7$ (100 g of sulfuric-acid free $(NH_4)_2Cr_2O_7$ per liter solution) is added; the precipitate is allowed to settle and 5-ml portions of reagent are added until precipitation is complete; (4) the precipitate is again allowed to settle, the clear liquid decanted through a sintered-glass funnel with the aid of vacuum, and the precipitate washed with an $NH_4C_2H_3O_2$ wash solution (20 ml of the reagent described in Step 3 diluted to one liter) until the filtrate is no longer colored; (5) the precipitate is dissolved in a small volume of warm 1:4 HNO_3, and the solution is filtered to dissolve any $BaCrO_4$ that may have been transferred with the supernate; sufficient acid is added to be sure all the solid dissolves, the solutions combined, and 1:1 NH_4OH added slowly and with stirring until the precipitate that forms again no longer dissolves; (6) at least 10 ml of $NH_4C_2H_3O_2$ solution (Step 3) is added, the liquid heated to boiling while stirring, and the precipitate washed by decantation with $NH_4C_2H_3O_2$ solution (Step 4); the precipitate is again dissolved in a small volume of warm 1:4 HNO_3 and the mixture filtered; the filtrate is transferred to a beaker and evaporated to low volume; the barium is recovered and purified by precipitations from 76 wt % HNO_3 solutions as described in the Specific Procedure for barium (copper pocket) beginning with Step 5.

CHLORINE

Bromine Impurity

Since the chemical recovery system is also quantitative for bromine, a special procedure[40] must be added if bromine is a suspected impurity: (1) the NaCl is dissolved in water and the solution transferred to a 300-ml three-neck distilling flask;[41] (2) the solution is diluted to 90 ml and 10 ml of re-distilled HNO_3 is added; (3) the solution is refluxed for 2 hr while a stream of halide-free air is pulled through the system; (4) the heat is increased, 10 ml of solution distilled, and distillate allowed to stand; (5) the enriched chloride is recovered through the AgCl-H_2 reduction method described in Specific Procedures for chlorine or by the method of Shields, et al.[40]

---

[40] W. R. Shields et al., "Absolute isotopic abundance ratio and the atomic weight of chlorine," J. Am. Chem. Soc. 84: 1519-22 (1962).

[41] T. J. Murphy, W. S. Clabaugh, and R. Gilchrist, J. Research Natl. Bur. Standards 53: 13-18 (1954).

LEAD

Barium and Strontium Impurities

Barium, strontium, and lead nitrates are precipitated from nitrate solution when the HNO_3 concentration is ≥ 76 wt %. Hence, recovering one of these three elements, exclusive of the other two, requires analytical separation techniques. Lead can be removed from both barium and strontium by electrolyzing the lead, as PbO_2, onto the anode from a solution that is 20 wt % HNO_3; barium can be precipitated (after lead has been removed) with chromate ion, leaving strontium in solution; strontium can then be concentrated and recovered from the nitrate solution (following lead and barium removal) by precipitating with 80% wt % HNO_3.

STRONTIUM

Barium and Lead Impurities

See discussion under Lead, Appendix B, p. 77.

TUNGSTEN

Silica Impurity

Although attempts are made to prevent SiO_2 contamination of tungsten by using Al_2O_3 abrasive in cleaning pockets and by using plastic instead of glass equipment for alkaline solutions, spectrographic analysis of the purified WO_3 occasionally shows silica as an impurity.

If the level of impurity is >0.5%, the silica should be removed by the following procedure: (1) the WO_3 is transferred from the Vycor dish to a platinum dish and moistened first with concentrated H_2SO_4, then with $(HF)_n$ (~10 ml of each reagent); (2) the moistened residue is heated to complete dryness on a hot plate in a fume hood, and the dry residue is transferred to an electric muffle furnace and heated for 1-2 hr at 750°C to drive off the silicon as SiF_4 (the H_2SO_4 was added to prevent volatization of the tungsten); the procedure is repeated if the silicon content remains too high.

APPENDIX:C: SPECIAL PREPARATIONS FROM INVENTORY FORMS OF ISOTOPES

BARIUM

$BaCO_3$

1. Weigh the correct quantity of $Ba(NO_3)_2$ (the preferred inventory form) needed to fill the request (gravimetric factor: Ba to $Ba(NO_3)_2$ = 1.903), transfer the salt to a plastic beaker, and dissolve the salt in distilled water. (Barium nitrate is completely soluble in water; hence, there should be no insoluble residue. However, if any insoluble matter is observed, it should be removed by filtration through Whatman No. 42 paper of the appropriate size.)
2. Precipitate $BaCO_3$ from the nitrate solution by the addition of an excess of solid $(NH_4)_2CO_3$.
3. Separate the white insoluble carbonate by centrifugation in high-temperature plastic centrifuge tubes, wash with water to remove all NH_4NO_3, then wash with acetone to remove the excess water, and finally dry the solid in an electric drying oven at ~200°C.

CADMIUM

Cadmium Metal

NOTE: This procedure is based on 10 g of contained cadmium/liter of solution.

1. Dissolve the required quantity of CdO to fill the request in a minimum quantity of 6 M H_2SO_4.
2. Evaporate the resulting solution to near dryness on a steam bath to ensure complete solution; then dilute with water. (No residue should be detected at this point; however, if there is any indication of insoluble matter, it should be removed by filtration on Whatman No. 42 filter paper.)
3. Precipitate $Cd(OH)_2$ from solution by adding 10 M NaOH dropwise until the solution becomes basic to phenolphthalein indicator.
4. Add concentrated (10%) NaCN solution slowly while stirring until the $Cd(OH)_2$ just dissolves, forming the stable tetracyanocadmiumate(II) ion, $[Cd(CN)_4]^{2-}$. Carefully avoid an excess of cyanide in order to minimize electrode attack during electrolysis. Follow Steps 5-7 to prepare powdered cadmium metal. Check Steps 8-11 for modifications for preparing cadmium metal suitable for rolling into foils.
5. Dilute the solution to ~750 ml and begin electrolysis between a platinum anode and a tantalum rod cathode (the tantalum rod should be smoothed by crocus cloth prior to insertion in solution in order to effect easy removal of metal from cathode). Cover the plastic beaker with a plastic lid that has an opening in the center for the tantalum rod; the cover prevents the loss of solution by spraying. Stir the solution throughout the electrolysis with a Teflon-coated magnetic stirrer bar.
6. Add Na_2SO_4 crystals to the stirred solution until the current reaches 3 amps. Allow the electrolysis to continue at 3 amps until cadmium fails to appear on a freshly exposed surface of the tantalum rod. (Approximately 5 g of cadmium metal is deposited in an 8-hr period at 3 amps.)

7. Remove powdered cadmium metal from the tantalum rod by gentle scraping with a small stainless steel spatula.
8. If metal suitable for rolling into foils is desired, electrolyze the complexed cyanide solution (Step 4) at ~1 amp for a longer period of time to give flakes instead of powder on the electrode.
9. Remove cadmium from the tantalum rod with a spatula, transfer the metal to a stainless steel die, and press the metal into a small pellet.
10. Melt the pellet in a graphite crucible under argon using oxalic acid crystals as fluxing agent.
11. Dissolve oxalic acid in water, wash the cadmium pellet with acetone, and dry at low temperature.

<u>$CdCl_2$</u>

1. Dissolve the required quantity of CdO in 6 <u>M</u> H_2SO_4. Filter on Whatman No. 42 paper if any insoluble matter is observed.
2. Precipitate cadmium from the sulfate solution by adding an excess of solid $(NH_4)_2CO_3$. (To achieve quantitative precipitation of $Cd(CO_3)_2$, excess ammonia should be removed by digestion on a steam bath, and the precipitate should be aged by standing overnight at room temperature and at a pH of about 8.)
3. Separate the carbonate by centrifugation in plastic centrifuge tubes. Wash several times with water to remove sulfate ion.
4. Wash the solids from the centrifuge tubes to a Pyrex beaker first with water, then with 1:10 HCl. Add enough 1:1 HCl to make the solution distinctly acidic.
5. Evaporate to a dry solid on a steam bath. Heat the hydrated salt to 120°C to obtain anhydrous $CdCl_2$.

CHLORINE

Anhydrous HCl is sometimes preferred rather than NaCl, the usual inventory form. Likewise, free chlorine has been requested.

Anhydrous HCl

1. Weigh the theoretical quantity of NaCl needed to fill the request, transfer the sample to an appropriately sized beaker, and dissolve the salt in distilled water.
2. Add enough concentrated HNO_3 to give a solution 1 M in HNO_3, and precipitate the chlorine as AgCl by the addition of an excess of 1 M $AgNO_3$ solution. (Care must be taken throughout the procedure to prevent the introduction of chlorine, HCl for example, of natural origin.)
3. Centrifuge the precipitate using Pyrex centrifuge tubes. Wash the precipitate carefully with HCl-free distilled water, then with alcohol, and finally with acetone to free the precipitate of most of the water.
4. Dry the precipitate in an electric drying oven at ~200°C to remove the remaining occluded water. Transfer the dried sample, usually a small pellet, to a small porcelain boat and place the boat in a quartz tube fitted with standard taper or semi-ball joints for gas entry and an exit trapping system (Fig. 5).
5. Heat the quartz tube by an electric tube furnace mounted in a horizontal position with helium flowing over the sample. Heat gradually to 700°C and trap any water present in a $CaSO_4$ drying tube.
6. Start H_2 flowing slowly while the helium is still flowing, but gradually reduce the helium while increasing the H_2. Heat for ~1 hr at 700°C; the white salt should have been converted to powdered silver metal in this time.
7. Resume the flow of helium and stop the hydrogen flow. As soon as it is certain that all H_2 has been removed, isolate the HCl by sealing at constriction A shown in diagram.

ORNL-DWG 70-6511

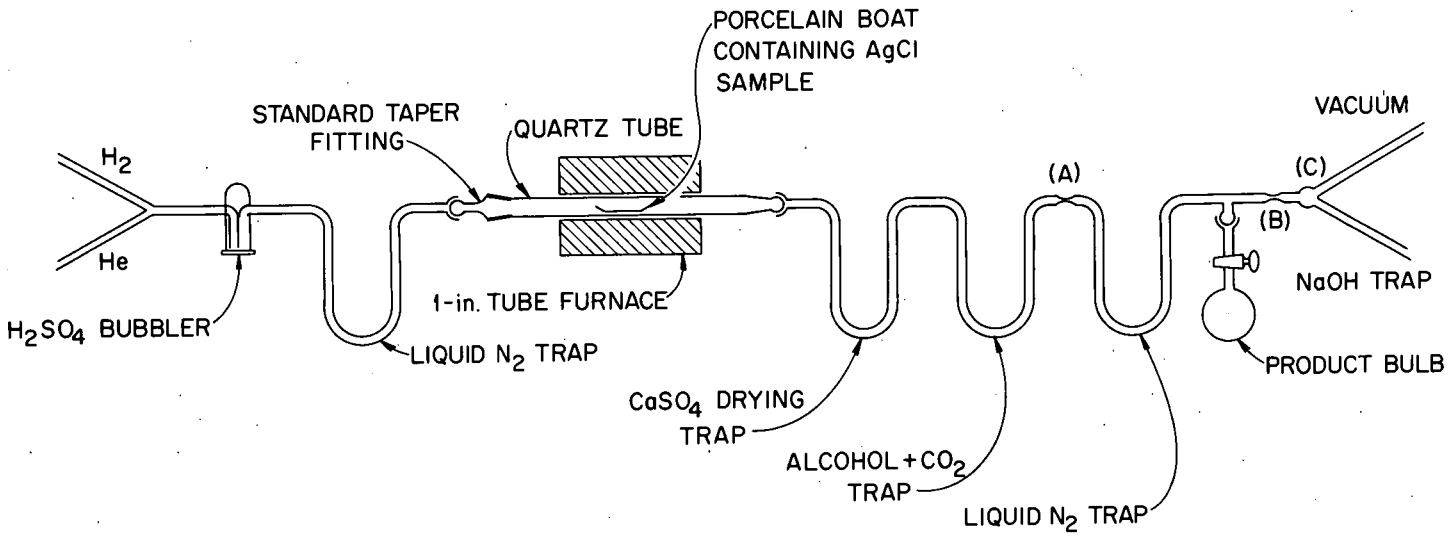

Fig. 5. **Conversion of** Sodium **Chloride** to Anhydrous Hydrogen **Chloride.**

8. Open the stopcock to the vacuum system at C and allow to pump for 5-10 min to remove most of the helium flush-gas. With the system still under vacuum, seal at constriction B, thereby isolating the HCl in the liquid N_2 trap in a relatively pure state.
9. Immerse the break-seal in liquid N_2 and slowly withdraw the cooling trap from the "U" tube, thereby allowing HCl to transfer to the break-seal. Isolate the sample for shipment by sealing the break-seal from the rest of the equipment.

Cl_2

Chlorine gas is usually prepared by oxidizing Cl^- with H_2O_2 or MnO_2. Since O_2 and H_2O vapors are expected gaseous impurities, a system that permits removing these impurities must be provided.

1. Weigh the theoretical quantity of NaCl needed to fill the request (Cl_2 to NaCl = 1.648).
2. Dissolve the sample of NaCl in a minimum of distilled water and transfer the resulting solution to a 300 ml three-necked distilling flask equipped with a gas inlet, a dropping funnel, and a gas exit.
3. Connect the all-glass system (Fig. 6) which consists of reaction flask, condenser, $Mg(ClO_4)_2$ drying trap, a "U" tube cooled with liquid N_2, and a product bulb (or break-seal) of larger volume than the requested amount of gas. Provide two separate exhaust systems so that helium may be used as a flush gas while chlorine is being liberated and a vacuum system that will reduce the pressure in the trap and bulb and allow transfer into the product bulb following completion of the reaction. (A dilute solution of NaOH works well for the exhaust trap since it will trap any chlorine that might escape the cooling trap.)
4. Add 2 g of MnO_2 to the reaction flask for each 70 mg of contained Cl_2, connect all joints, and flush the system with helium through the sodium hydroxide scrubber solution (MnO_2 method taken from Townes and Aamodt[42]).

---

[42] C. H. Townes and L. C. Aamodt, "Nuclear Spin and Quadrupole Moment of Cl^{36}", Phys. Rev. 76: 691-2 (1949).

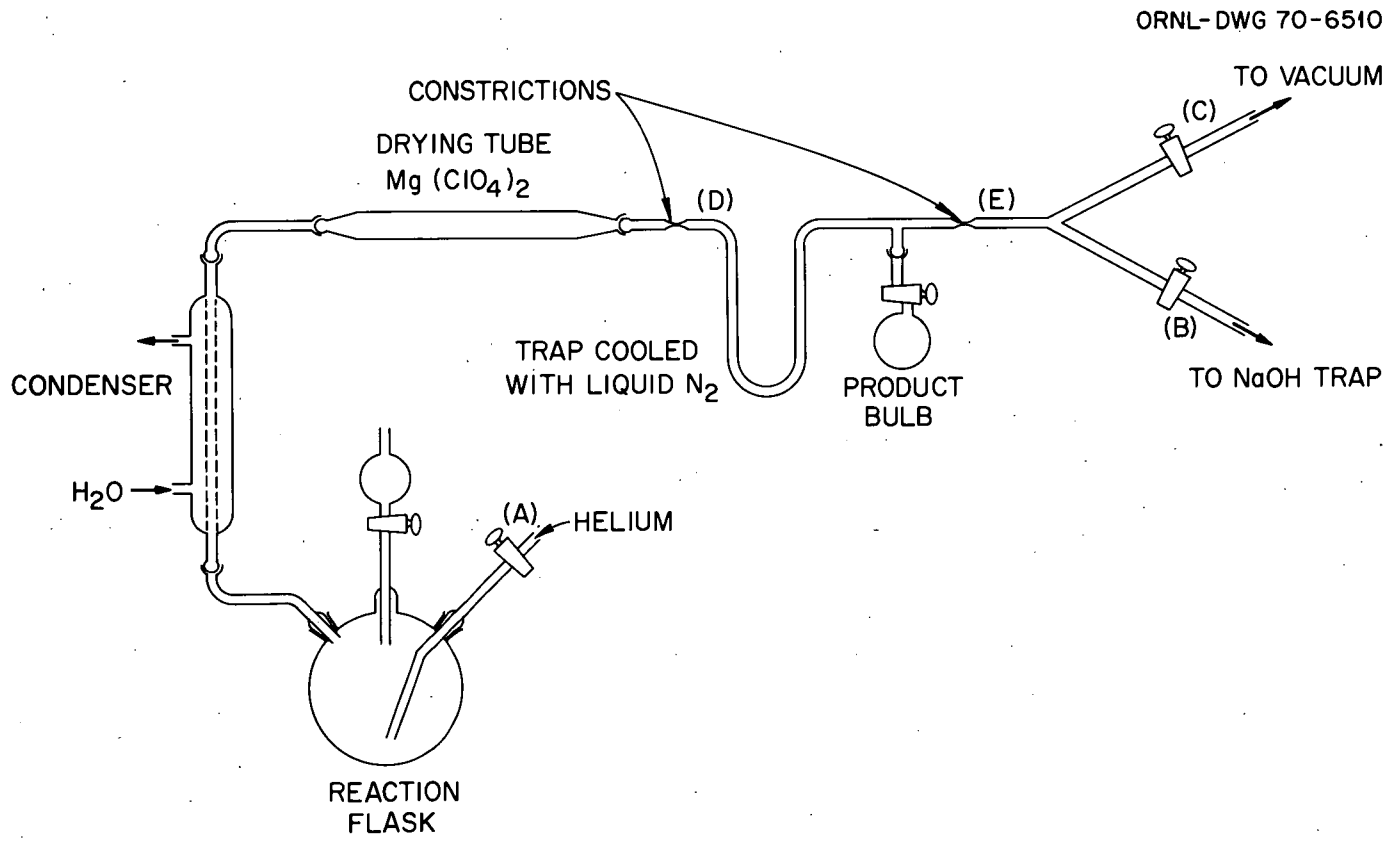

Fig. 6. Conversion of Sodium Chloride to Elemental Chlorine.

5. Stop the helium flow and introduce ~0.2 ml of concentrated H_2SO_4 to the solution from the dropping funnel (for each 70 mg of chlorine). Re-start the helium flow and warm the reaction flask to ~80°C to complete the evolution of Cl_2.
6. As soon as the reaction has ceased, close stopcock A (Fig. 6) at the reactor and stopcock B to the scrubbing solution and open stopcock C to the vacuum pump. This permits any oxygen that might have been generated during the oxidation step to be removed and the small volume evacuated so that the chlorine can be transferred.
7. Pump for only 5-10 min, then seal at the constrictions D and E to isolate the "U" tube and the product container. (The pumping step should be held to a minimum, otherwise enriched chlorine gas will be lost. The procedure described here was tested with normal material for quantitativeness prior to converting the enriched sample and was found to be >95% efficient when the pumping time was restricted to about 10 min.)
8. Remove the Dewar flask containing liquid N_2 from the "U" tube and re-position the flask so that liquid N_2 covers the product bulb. After about 15 min close stopcock F which isolates the product bulb and remove the bulb for shipment.

CHROMIUM

CrO_3

1. Weigh the theoretical quantity of Cr_2O_3 necessary to fill the request (gravimetric factor: Cr to Cr_2O_3 = 1.461), transfer the oxide to a Pyrex beaker, and add 20 ml of 70% $HClO_4$ for any weight of Cr_2O_3 up to 1 g. (Use an additional 20 ml of $HClO_4$ for each additional gram or fraction of a gram.)
2. Cover the beaker with a close fitting watch glass and heat on a steam bath (or other controlled heating source) until the Cr_2O_3 is completely dissolved; the solution should be a clear green.
3. Place the beaker on a hot plate located in an efficient fume hood,[43] and heat until (a) the $HClO_4$ begins to fume, (b) the green color completely disappears, and (c) the chromium precipitates as orange-red crystals of CrO_3.[44]
4. Allow the beaker and contents to cool to room temperature; then transfer the crystals to a sintered glass vacuum funnel with the aid of a stream of cold 70% $HClO_4$. (The CrO_3 should be transferred to a funnel as soon after cooling to room temperature as possible since CrO_3 is extremely hygroscopic and tends to pick up water on standing, thereby allowing chromium to go back into solution.)
5. Wash the crystals on the funnel with 70% $HClO_4$ using a vacuum flask and gentle suction.
6. Dry the crystals on the funnel to about 175°C which drives off the excess $HClO_4$ but does not decompose CrO_3 (the CrO_3 melts at about 190°C and begins to vaporize at a slightly higher temperature; at the same time, the compound begins to lose oxygen, and it will finally revert in several stages to Cr_2O_3).

---

[43]See Appendix A, p. 73 for safety precautions in handling $HClO_4$.

[44]See Appendix A, p. 57 for safety precautions in handling CrO_3.

Chromium Metal

See procedure for conversion of TiO_2 to titanium metal (p. 99, Appendix C) for discussion of reduction of oxides of refractory metals with calcium to the metal form.

HAFNIUM

Hafnium Metal

See procedure for conversion of TiO_2 to titanium metal (p. 99, Appendix C) for discussion of reduction of oxides of refractory metals with calcium to the metal form.

LEAD

Lead(II) nitrate is the end product of the current refinement procedure and is sufficiently stable for inventory use. However, quite frequently users of enriched isotopes prefer the carbonate, oxide, or free metal.

$PbCO_3$

1. Weigh the correct quantity of $Pb(NO_3)_2$ needed to fill the request (gravimetric factor: Pb to $Pb(NO_3)_2$ = 1.598), transfer the salt to a plastic beaker, and dissolve the salt in water. (Lead nitrate is quite soluble in water; hence, there should be no insoluble residue. However, if any insoluble matter is observed, it should be removed by filtration through Whatman No. 42 paper of the appropriate size.)
2. Precipitate neutral $PbCO_3$ by adding the nitrate solution to a solution of $(NH_4)_2CO_3$ containing small chunks of solid $(NH_4)_2CO_3$. Warm to remove the excess $(NH_4)_2CO_3$ without reaching the boiling point. (A basic lead carbonate, which has the composition, $Pb(OH)_2 \cdot 2PbCO_3$ when pure, is formed from the neutral carbonate by boiling in water while passing in a current of CO_2.)
3. Separate the white insoluble carbonate by centrifugation in high-temperature plastic centrifuge tubes, wash with water to remove all NH_4NO_3, then wash with acetone to remove the excess water; finally dry the solid in an electric drying oven at ~200°C.

PbO

Lead(II) oxide can be prepared directly from either the carbonate or nitrate by thermal decomposition. Since the nitrate is difficult to contain at the decomposition point (~470°C), PbO is usually prepared by igniting $PbCO_3$ in platinum at 650°C (the stain in the platinum container following ignition can be removed by fusing $KHSO_4$ or $K_2S_2O_7$ in the

container). Dilead(II) lead(IV) oxide, Pb_3O_4, may be formed during the ignition but is quantitatively converted to PbO at 610-619°C.

Lead Metal

Lead metal is obtained by reducing the oxide with H_2 (another reductant which may be used is graphite[45]).

1. Weigh the oxide in a pure graphite crucible or boat.
2. Place the container in a 1-in. O.D. quartz tube fitted with a quartz tapered joint at one end and a semi-ball joint at the other.
3. Flush the tube with hydrogen at room temperature; and with the hydrogen flowing, raise the temperature directly to 600°C.
4. Cool the sample under hydrogen to ~300°C; complete cooling under a nitrogen atmosphere. A bead or button will be obtained, and either form is suitable for rolling or for further fabrication.

[45]P. S. Baker, "A Rapid Efficient Method for Reducing Certain Metallic Oxides, J. Chem. Educ. 38: 117 (1961).

POTASSIUM

A rapid, simple technique has been devised for converting isotopically enriched potassium in the form of chloride to the carbonate for use of those who require the carbonate and for use in preparing other potassium halides.

K_2CO_3

1. Weigh the theoretical quantity of KCl required to fill customer's request from inventory bottle (gravimetric factor: K to KCl = 1.9069).
2. Transfer sample to appropriate sized Vycor crucible and dissolve in a minimum of high-purity distilled water.
3. Add twice the stoichiometric quantity of recrystallized oxalic acid required to effect conversion of KCl to $K_2C_2O_4$ (~1.7 mg oxalic acid/mg KCl).

$$2KCl + C_2H_2O_4 \cdot 2H_2O \rightarrow K_2C_2O_4 + 2HCl + 2H_2O$$

4. Evaporate the solution to dryness and dissolve the residue in distilled water. Again add the same quantity of oxalic acid (Step 3) and evaporate to dryness.
5. Heat to ~150°C to drive off the excess oxalic acid, then transfer to a muffle furnace and heat to about 600°C in a good supply of air to ignite oxalate to carbonate. Should the sample appear "lumpy", dissolve in a minimum of distilled water and dry at 300-400°C.
6. Transfer the sample to a shipping vial and weigh as K_2CO_3.

K_2CO_3 (Ion Exchange Method)

1. Weigh the theoretical quantity of KCl to fill the request, transfer the salt to a Pyrex beaker, and dissolve in water. (Filter through Whatman No. 42 filter paper if there is any indication of insoluble residue.)
2. Pour the liquid into the top of a column of AR grade (Dowex 50-X8) ion exchange resin (hydrogen form and of 100 to 200 mesh)

at such a rate that there is a small volume of liquid above the resin at all times. For best results the column should contain ~1 ml of wet resin for each milliequivalent (~39 mg) of potassium present.

3. As soon as all the salt solution has been poured into the column, start water flowing through the column and continue with water until there is no longer an acid reaction to litmus at the exit end of the column.
4. Add 1:1 NH_4OH to the resin column to neutralize the hydrogen ion. (Hydrogen has been displaced when the liquid coming from the bottom is as alkaline as that going into the top.)
5. Pass a saturated solution of $(NH_4)_2CO_3$ through the resin bed to displace the potassium ion from the resin. Collect the liquid in a plastic beaker.
6. Evaporate the liquid to dryness on a low-temperature heat source (steam bath, sand bath, aluminum block). Dissolve the solids in a minimum of water and filter through Whatman No. 42 filter paper to remove any fine resin particles.
7. Evaporate the liquid to dryness in a Vycor dish at low temperature; heat to 500°C.

<u>KI</u>

1. Follow the first five steps of the procedure for converting KCl to K_2CO_3.
2. Transfer the carbonate to a beaker and moisten the carbonate with water. Add 1:1 unpreserved HI slowly until the solution is distinctly acidic (additions should be made slowly to avoid losses of sample with the escaping carbon dioxide).

$$K_2CO_3 + 2HI \rightarrow 2KI + H_2O + CO_2$$

3. Evaporate the solution to dryness and transfer the salt as rapidly as possible to a tared glass vial. (The transfer should be made in a dry atmosphere since KI is hygroscopic.)
4. If the anhydrous salt is required, add a quantity of NH_4I (equal in weight to the KI assumed present) to the acid solution and

evaporate the resulting solution to dryness in a small quartz boat. Place the boat in a Pyrex tube which can be evacuated and heat to vaporize the NH_4I. Transfer the KI to a container that can be sealed in a dry atmosphere.

RUTHENIUM

$RuO_2 \cdot xH_2O$

1. Weigh the theoretical quantity of ruthenium needed to fill the request and transfer the metallic sample to a silver container for dissolution.
2. Add a 5:1 mixture of KOH and KNO_3 to the sample, using ~15 g KOH for each gram of ruthenium.
3. Heat the mixture to ~600°C in an electric muffle furnace to melt both compounds and dissolve the ruthenium.
4. Allow the melt to cool to room temperature, place the container in a plastic beaker, and cover the container and melt with water. Stir occasionally with a plastic rod to aid in disintegrating the melt.
5. Remove the fusion container (washing well with water) as soon as the melt has disintegrated, and acidify the ruthenium-bearing solution with 1:1 HCl.
6. Digest at steambath temperatures to dissolve the salts. Dilute the solution with water to ~3 M HCl to permit filtration through paper and filter through No. 42 paper.
7. Wash any insoluble residue with hot water to remove Cl^-. Dry and ignite the paper in a small procelain crucible. Should there be a residue, although most of the ruthenium dissolves through fusion, transfer the material to the silver vessel and fuse with an appropriate quantity of KOH and KNO_3.
8. Dissolve the melt as before (Steps 5 and 6), add 1:1 HCl until distinctly acidic, and filter into main body of solution from Step 6.
9. Evaporate the HCl solution of ruthenium to near dryness, add about 10 ml of concentrated H_2SO_4, and evaporate to heavy fumes of SO_3.
10. Add ~100 ml of water and transfer the slurry to an all-glass distillation outfit (Fig. 4, p. 40). All joints should be ground glass and lubricated with a non-oxidizable substance (such as H_2SO_4).

11. Add 100 ml of filtered 10% $NaBrO_3$ to the flask through a tube equipped with a stopcock, close the stopcock, and heat the solution gently to boiling while pulling air over the liquid and then through three traps containing 1:1 HCl and SO_2.
12. Add a saturated H_2SO_3 solution (6% SO_2/H_2O) to the traps through a stopcock opening, a few milliliters at a time, as the distillation proceeds.
13. When the solution in the distillation flask becomes water-white, cool the solution. Transfer the trap solutions to a beaker (under a fume hood) and evaporate to a moist residue on a steam bath.
14. Add sufficient 1:1 HCl to dissolve the residue, dilute the solution with water, and filter on No. 42 Whatman filter paper to remove silicious matter.
15. Evaporate the filtrate to near dryness on the steam bath, add ~10 ml of concentrated H_2SO_4, and heat until essentially all HCl has been eliminated. Dilute the ruthenium solution and remove any solids by filtration on No. 42 paper. Wash the paper and any insoluble matter with 1:20 H_2SO_4.
16. Precipitate the ruthenium in the filtrate by adding a saturated solution of $NaHCO_3$ slowly and carefully until the pH reaches 6. Boil to coagulate the black precipitate of $RuO_2 \cdot xH_2O$.
17. Centrifuge the precipitate in small centrifuge tubes (or cones); wash well with 1% $(NH_4)_2SO_4$, then several times with water.
18. Dry the hydrated ruthenium dioxide precipitate at 110°C in an electric drying oven.

STRONTIUM

$SrCO_3$

1. Weigh the correct quantity of $Sr(NO_3)_2$ needed to fill the request (gravimetric factor: Sr to $Sr(NO_3)_2$ = 2.415), transfer the salt to a plastic beaker, and dissolve the salt in distilled water.
2. Precipitate $SrCO_3$ from the nitrate solution by the addition of an excess of solid $(NH_4)_2CO_3$.
3. Separate the white insoluble carbonate by centrifugation in high-temperature plastic centrifuge tubes, wash with water to remove NH_4NO_3, then wash with acetone to remove the excess water, and finally dry the solid in an electric drying oven at ~200°C.

SrF_2

1. Weigh the correct quantity of $Sr(NO_3)_2$ needed to fill the request, transfer the salt to a plastic beaker, and dissolve in distilled water. (Strontium nitrate is completely soluble in water; hence, there should be no insoluble residue. However, if any insoluble matter is observed, it should be removed by filtration using Whatman No. 42 paper of the appropriate size.)
2. Precipitate $SrCO_3$ from the nitrate solution by the addition of an excess of solid $(NH_4)_2CO_3$.
3. Separate the white insoluble $SrCO_3$ by centrifugation in high-temperature plastic centrifuge tubes, wash with water to remove all NH_4NO_3, then with acetone to remove the excess water, and finally dry the solid in an electric drying oven at ~200°C.
4. Transfer the dry carbonate to a plastic vessel and decompose the compound through the slow addition of 1:1 hydrofluoric acid. Agitate until the solution is distinctly acid (the carbonate will have been completely converted to fluoride).
5. Evaporate mixture to dryness on a steam bath, transfer the solid to a platinum dish, and heat to 450°C.

TITANIUM

Refractory metals, such as chromium, hafnium, titanium, and zirconium, can be obtained in a reasonably pure form through the reduction of their respective oxides (the preferred inventory form) with calcium metal.

An efficient method of performing the reduction with calcium is to take advantage of the equilibrium obtained when $CaCl_2$ and sodium metal interact at high temperatures to produce calcium metal and NaCl. Addition of a metal oxide which reacts with calcium but not with sodium removes the calcium as it is formed, thereby permitting the reaction to go to completion.

The procedure described below for the conversion of TiO_2 to titanium metal works equally well for the conversion of chromium, hafnium, and zirconium oxides to the elemental form if the following ratios of reductant per metal oxide are used:

Oxide	Wt of Oxide, g	Wt of $CaCl_2$, g	Wt of Na, g
Cr_2O_3	1.0	4.4	2.2
HfO_2	1.0	2.1	1.1
ZrO_2	1.0	3.6	1.8

Titanium Metal

1. Consult Appendix A for safety precautions.
2. Weigh the theoretical quantity of TiO_2 needed to fill the request (Ti to TiO_2 = 1.668) and transfer the sample to a small beaker.
3. Add 5.55 g of anhydrous $CaCl_2$ for each gram of TiO_2 and mix the powders extremely well. (The $CaCl_2$-TiO_2 mixture may be dehydrated by heating at 400-500°C for an hour in a stream of dry air.)
4. Transfer the powder to a stainless steel beaker as quickly as possible, add 2.75 g of freshly-cut sodium metal (also based on 1 g TiO_2), and transfer the beaker to an atmosphere chamber (Fig. 7 below).
5. Cover the chamber with a loose fitting stainless lid and place the chamber inside a vertically mounted electric crucible furnace.

ORNL-DWG 70-6508

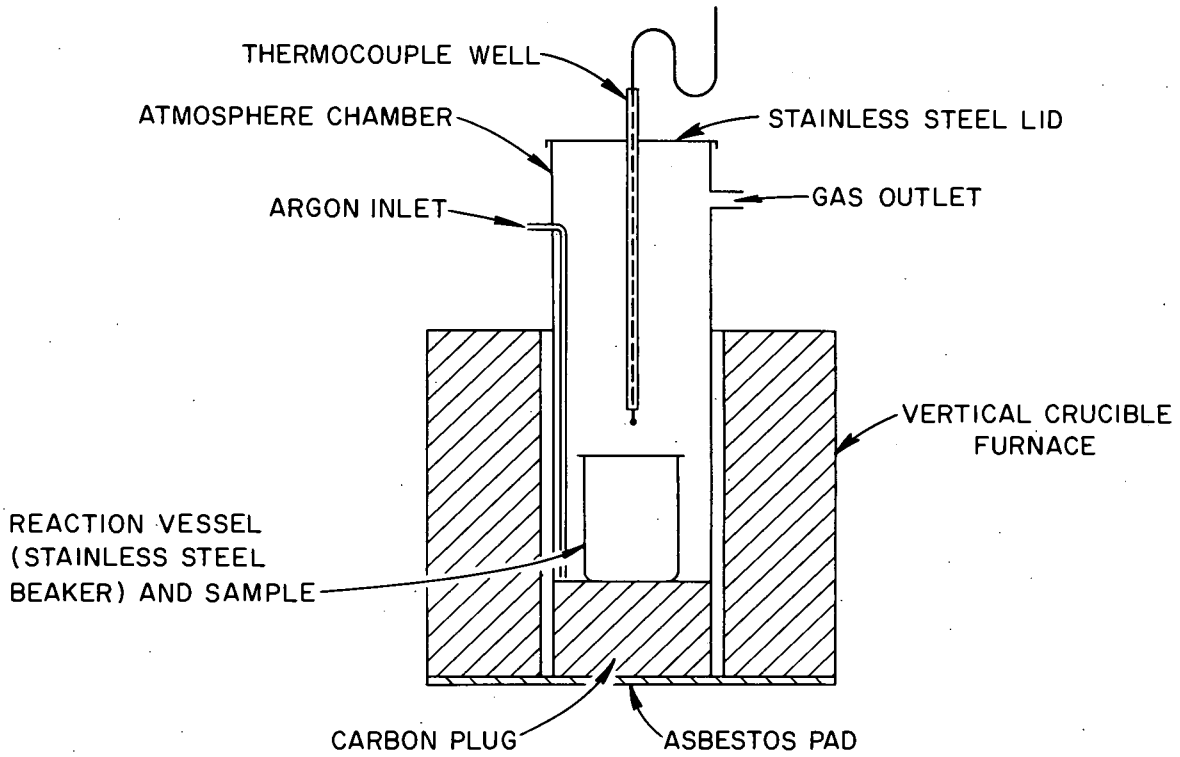

Fig. 7. Apparatus for the Preparation of Titanium.

Place the furnace on an asbestos pad and locate the furnace in or near an efficient fume hood in order to exhaust the Na_2O smoke.

6. Start argon flowing into the atmosphere chamber at the rate of about 5 liters/min to replace residual gases. The argon flow (which is continued throughout the heating and cooling cycle) protects the sodium from oxidation while reaching reaction temperature, helps to remove the excess sodium as the temperature increases to the reaction point, and protects the finely-divided titanium from oxidation during and following the reduction.
7. Heat the reaction mixture directly to 600°C and maintain that temperature for ~15 min. Continue heating, raising the temperature in about 50° increments, until the temperature finally reaches 880°. (Above about 650°C, sodium vapor is swept out of the atmosphere chamber by the argon stream and burns on exposure to air giving Na_2O, a white smoke.)
8. As soon as the sodium flame nearly stops (~1 hr), indicating that most of the excess sodium has distilled from the reaction mixture,

permit the system to cool to room temperature. As indicated, the argon flush is continued during cooling.

9. When the reaction vessel has cooled, remove the beaker from the atmosphere chamber with a stainless steel wire hook and half fill the beaker with a solution of 5% methanol in isopropyl alcohol. Any residual unreacted sodium will react with this mixture and thereby permit safe aqueous leaching.
10. After <u>all</u> bubbling ceases, remove most of the organic solvent, and replace with fresh solution. If there is no further reaction, start adding water very slowly to dissolve the excess calcium metal. Permit the reaction to proceed in a controlled manner until gas evolution ceases.
11. Transfer the contents of the stainless steel beaker to a 4 liter plastic (Teflon or MFP) beaker, add water and dilute HCl to a pH of 4, and agitate with a magnetic stirrer until the large masses are broken up. (Some of the reaction mass may adhere to the walls or bottom of the beaker; this should be removed by continued washing with warm water.)
12. Allow the solids to settle and decant the supernatant liquid. Transfer the solids to a centrifuge tube (or bottle) and centrifuge-wash the solid materials until a slightly acidic solution is obtained above the solids which persists for about 2 hr. This indicates that essentially all the CaO impurity has been removed; most of the NaCl also will have been removed during this treatment.
13. Treat the metal powder with successive washes of 2% NH_4Cl, made pH 4 with HCl, until samples of the wash liquid show no yellow color (indicative of sodium) in the flame.
14. Decant to as near dryness as possible, then wash the metal powder with ethyl alcohol and follow with diethyl ether or acetone to remove as much absorbed water as possible. (Centrifugation may be necessary in order to obtain a clear supernatant.)
15. Dry the powder initially by blowing dry argon into the centrifuge bottle at the rate of 1 liter/min at room temperature. (Precautions should be taken to prevent an excessive flow rate and possible loss of sample.)

16. Transfer the container to a large desiccator and evaluate for about 24 hr.
17. Transfer and store the powder in an airtight, argon-filled container.

TUNGSTEN

Tungsten Metal

1. Weigh the theoretical quantity of WO_3 into a quartz boat (gravimetric factor: W to WO_3 = 1.2610); insert the boat into a quartz combustion tube and place the tube in an electric tube furnace.
2. Flush the tube with an inert gas (dry N_2 free of oxygen or helium or argon), start hydrogen while the inert gas is still flowing, and slowly stop the inert gas.
3. When the hydrogen flow has increased to 5 to 10 ml/min, increase the heat in the tube furnace slowly by means of a Variac (rheostat) until the temperature reaches ~450°C.
4. Maintain this temperature until all the greenish-white solid changes to a black powder and no additional water is released.
5. Increase the heat rapidly until the temperature reaches 800°C and allow the reduction to continue for ~1 hr. Heating to 800°C in hydrogen helps to ensure complete reduction and tends to reduce the pyrophoric nature of the metal. (Most of the WO_3 should have been reduced to metal before raising the temperature to 800°C because several investigators[46,47,48,49] believe the oxide is volatile above about 800°C.)
6. Allow the sample to cool to ~300°C with hydrogen flowing; then allow the sample to cool to room temperature in an oxygen-free inert gas.

---

[46]H. H. Willard and H. Diehl, Advanced Quantitative Analysis, p. 218, Van Nostrand, Princeton, N. J., 1943.

[47]N. H. Furman (ed.), Standard Methods of Chemical Analysis, Vol. I, p. 1162, Van Nostrand, Princeton, N. J., 1962.

[48]L. Wohler and O. Balz, Z. Electrochem. 27: 406 (1921).

[49]R. A. Chalmers, Comprehensive Analytical Chemistry, Vol. IC, p. 598, C. L. Wilson and D. W. Wilson (eds.), Elsevier, New York, 1962.

ZIRCONIUM

Zirconium Metal

See procedure for conversion of TiO_2 to titanium metal (p. 99, Appendix C) for discussion of reduction of oxides of refractory metals with calcium to the metal form.

APPENDIX D: SPECIAL ISOTOPIC COLLECTIONS

LEAD-210

Radiogenic lead, enriched in either ^{206}Pb or ^{208}Pb, has been used as charge material in the calutrons on three separate occasions in order to obtain high purity ^{206}Pb and ^{208}Pb. In only one of these cases was an attempt made to enrich ^{210}Pb, a naturally occurring radioisotope associated with radiogenic lead.

The 210 isobars--^{210}Pb, ^{210}Bi, and ^{210}Po--each in equilibrium with the other in the original mineral, were collected in a recess cut into the unpurified graphite faceplates. Following termination of the separation runs, the recess areas were sawed out of the graphite sheets, the surfaces were cleaned as well as possible without disturbing the deposit, and the graphite strips were ignited in porcelain in an electric muffle.

The recovery and refinement involved the same procedures detailed in recovery of lead from graphite pockets except (1) the physical treatment and chemical processing were performed in a glove box to prevent spread of radioactive material and (2) the final processing resulted in an aqueous solution of $Pb(NO_3)_2$ instead of the solid inventory form.

ORNL-4583
UC-22 — Isotope Separation

INTERNAL DISTRIBUTION

1. Biology Library
2-4. Central Research Library
5-6. ORNL — Y-12 Technical Library Document Reference Section
7-26. Laboratory Records Department
27. Laboratory Records, ORNL R.C.
28. R. L. Bailey
29. P. S. Baker
30. E. E. Beauchamp
31. W. A. Bell
32. C. E. Bemis
33. G. E. Boyd
34. T. A. Butler
35. J. G. Byrd
36. A. E. Cameron
37. F. N. Case
38. H. H. Caudill
39. H. R. Clark
40. C. R. Croft
41. F. L. Culler, Jr.
42. W. C. Davis
43. J. H. Gillette
44. L. O. Gilpatrick
45. H. R. Gwinn
46. B. Harmatz
47. R. F. Hibbs
48. F. T. Howard
49. R. L. Johnson
50. F. A. Kappelmann
51. J. A. Kinnane
52. E. H. Kobisk
53. E. Lamb
54-103. L. O. Love
104. H. G. MacPherson
105. E. E. McCombs
106. E. W. McDaniel
107. J. F. Morehead (Y-12)
108. W. K. Prater
109. M. E. Ramsey
110. A. F. Rupp
111. F. M. Scheitlin
112. C. W. Sheridan
113. E. J. Shipley
114. J. R. Sites
115. M. J. Skinner
116. A. H. Snyder (Y-12)
117. A. H. Snell
118. K. A. Spainhour
119. D. A. Sundberg
120. F. B. Thomas
121. J. G. Tracy
122. J. N. Underwood
123. Boyd Weaver
124. A. M. Weinberg
125. R. D. Williams (Y-12)
126. J. O. Younghanse

EXTERNAL DISTRIBUTION

127. O. Almen, Chalmer University of Technology, Gothenburg 5, Sweden
128. David Axelrod, National Institutes of Health, Bethesda, Maryland
129. G. W. Barton, Jr., Lawrence Radiation Laboratory, Livermore, California
130. R. Bernas, Laboratoire Joliet-Curie, Orsay, France
131. H. D. Bruner, Division of Biology and Medicine, AEC, Washington, D.C.
132. Jean Camplan, Institute De Physique Nucleaire, BPN 1, 91 Orsay, France
133. Y. Y. Chu, Brookhaven National Laboratory, Upton, Long Island, N.Y.
134. R. J. Conner, Kansas State University, Manhattan, Kansas
135. D. C. Davis, Laboratory and University Division, AEC, ORO
136. G. Debus, Bureau Central De Mesures Nucleaires, Geel, Belgium
137. B. J. Dropesky, Los Alamos Scientific Laboratory, Los Alamos, N.M.
138. R. J. Dupzyk, Lawrence Radiation Laboratory, Livermore, California
139. E. E. Fowler, Division of Isotopes Development, AEC, Washington, D.C.

140. J. H. Freeman, Atomic Energy Research Establishment, Harwell, England
141. N. J. Freeman, Atomic Energy Research Establishment, Aldermaston, England
142. L. Friedman, Brookhaven National Laboratory, Upton, Long Island, N.Y.
143. Herbert Goldstein, Columbia University, New York, N.Y.
144. R. N. Goslin, Oglethorpe University, Atlanta, Georgia
145. W. Haubach, Mound Laboratories, Dayton, Ohio
146. W. W. Havens, Columbia University, New York, N.Y.
147. Rolfe Herber, Rutgers University, New Brunswick, N.J.
148. R. W. Hoff, Lawrence Radiation Laboratory, Livermore, California
149. T. R. Jones, Division of Research, AEC, Washington, D.C.
150. J. Kistemaker, Institute for Atomic and Molecular Physics, Amsterdam, Netherlands
151. J. Koch, University of Denmark, Copenhagen, Denmark
152. G. A. Kolstad, AEC, Washington, D.C.
153. J. L. Lerner, Argonne National Laboratory, Argonne, Illinois
154. W. B. Mann, National Bureau of Standards, Washington, D.C.
155. P. W. McDaniel, Division of Research, AEC, Washington, D.C.
156. S. J. Marsalis, Mississippi State College for Women, Columbus, Mississippi
157. R. B. Martin, Laboratory and University Division, AEC, ORO
158. M. C. Michel, Lawrence Radiation Laboratory, Berkeley, California
159. M. S. Moore, Los Alamos Scientific Laboratory, Los Alamos, N.M.
160. H. T. Motz, Los Alamos Scientific Laboratory, Los Alamos, N.M.
161. R. A. Naumann, Forrestal Research Center, Princeton, N.J.
162. K. O. Nielsen, Danish Atomic Energy Commission, Research Establishment, Riso, DK Roskilde, Denmark
163. A. O. C. Nier, University of Minnesota, Minneapolis, Minnesota
164. H. W. Newson, Duke University, Durham, N.C.
165. G. C. Phillips, Rice University, Houston, Texas
166. Enloe Ritter, Division of Research, AEC, Washington, D.C.
167. R. B. Roberts, Carnegie Institute, Washington, D.C.
168. G. L. Rogosa, Division of Research, AEC, Washington, D.C.
169. H. M. Roth, Laboratory and University Division, AEC, ORO
170. F. Rudenauer, Institute for Physics, Seibersdorf, Austria
171. D. C. Santry, Chalk River Laboratories, Chalk River, Ontario, Canada
172. R. K. Sheline, Florida State University, Tallahassee, Florida
173. A. B. Smith, Argonne National Laboratory, Argonne, Illinois
174. J. Spaepen, Euratom, Geel, Belgium
175. J. A. Swartout, Union Carbide Corporation, New York, N.Y.
176. W. L. Talbert, Jr., Iowa State University, Ames, Iowa
177. R. F. Taschek, Los Alamos Scientific Laboratory, Los Alamos, N.M.
178. G. R. Tilton, University of California, Santa Barbara, California
179. S. Trouve, Commissariat a l'Energie Atomique, Fontenay-aux-Roses, France
180. J. Uhler, Swedish National Defence Institute, Stockholm, Sweden
181. F. P. Viehbock, Studiengesellschaft for Atomenergie, Wien, Germany
182. W. Walcher, Physikalisches Instutut der Universtat Marburg, 355 Marburg/Lahn, Renthof 5, Germany
183. Patent Office, AEC, ORO

184-303. Given distribution as shown in TID-4500 under Isotope Separation category (25 copies — CFSTI)