OAK RIDGE NATIONAL LABORATORY
operated by
UNION CARBIDE CORPORATION • NUCLEAR DIVISION
for the
U. S. ATOMIC ENERGY COMMISSION

ORNL-TM-2932

DATE - April 29, 1970

COMPARISON OF TWO TRITIUM REMOVAL SYSTEMS DESIGNED TO MINIMIZE CONTAMINATION OF STEAM SYSTEMS IN FULL-SCALE THERMONUCLEAR POWER PLANTS

A. P. Fraas

Reactor Division

NOTICE This document contains information of a preliminary nature and was prepared primarily for internal use at the Oak Ridge National Laboratory. It is subject to revision or correction and therefore does not represent a final report.

This report was prepared as an account of work sponsored by the United States Government. Neither the United States nor the United States Atomic Energy Commission, nor any of their employees, nor any of their contractors, subcontractors, or their employees, makes any warranty, express or implied, or assumes any legal liability or responsibility for the accuracy, completeness or usefulness of any information, apparatus, product or process disclosed, or represents that its use would not infringe privately owned rights.

ORNL-TM-2932

Contract No. W-7405-eng-26

Reactor Division

COMPARISON OF TWO TRITIUM REMOVAL SYSTEMS DESIGNED TO MINIMIZE CONTAMINATION OF STEAM SYSTEMS IN FULL-SCALE THERMONUCLEAR POWER PLANTS

A. P. Fraas

MAY 1970

OAK RIDGE NATIONAL LABORATORY
Oak Ridge, Tennessee
operated by
UNION CARBIDE CORPORATION
for the
U.S. ATOMIC ENERGY COMMISSION

COMPARISON OF TWO TRITIUM REMOVAL SYSTEMS DESIGNED TO MINIMIZE CONTAMINATION OF STEAM SYSTEMS IN FULL-SCALE THERMONUCLEAR POWER PLANTS

A. P. Fraas

Abstract

Questions raised relative to the reactor safety and environment pollution problems of a controlled fusion reactor led to a critical examination of systems designed to recover tritium from the tritium breeding blanket. Attention was directed primarily at the extent to which the system would permit tritium to diffuse into the steam system of the power plant where it could lead to radiological contamination problems.

Two systems were examined in detail. Both take advantage of the low solubility of tritium in the potassium of a potassium-steam binary vapor cycle. The first depends on removal of tritium as a noncondensable from the potassium condenser; the second employs cold traps. The cold trap system is more attractive because it gives a lower tritium leakage rate to the steam system, a lower tritium inventory, and a lower system cost.

A major facet of the study entailed an examination of the effects of uncertainties in the interpretation and extrapolation of the limited data available on the permeation of hydrogen through materials. This work showed that both systems studied give acceptable tritium leakage rates into the steam system if the available data are interpreted optimistically, but only the cold-trapping system is acceptable if the data are interpreted pessimistically.

Keywords: tritium removal systems, thermonuclear power plants, cold traps, potassium vapor cycle, tritium leakage, tritium hazards.

Introduction

A number of studies have been made of means for removing the tritium from the lithium blanket of a controlled fusion reactor plant.[1-3] None of these has placed strong emphasis on the problem of minimizing tritium contamination of the steam system in the power plant. In view of the current strong concern over environmental pollution, a further study has been carried out to investigate the possibility of minimizing the tritium

contamination of the steam as a consequence of diffusion of tritium through the walls of the heat exchangers in the system. Two approaches are considered. Both of the proposed systems depend on removing the tritium from a potassium Rankine cycle interposed between the lithium system and the steam system.[4,5] The first is a refinement of the approach proposed in Ref. 1, that is, use of the concentrating effect of the potassium condenser and separation of the tritium as a non-condensable from the potassium vapor. The second approach depends on the use of a cold trap to remove potassium (or lithium) tritide from the liquid potassium in a bypass stream taken from the potassium condenser outlet.

Reference Design for a Thermonuclear Power Plant

Reactor

As the point of departure for this study, the conceptual design for a thermonuclear reactor plant shown in Fig. 1 was prepared using a 5000 Mw(t) mirror machine derived from the work of D. J. Rose[6] and presented in Ref. 5. The vacuum wall was taken as being 30 ft in diameter and 60 ft long. As shown in Fig. 2, the vacuum wall would be surrounded by a reflector consisting of an inner layer of 60 cm of lithium and an outer layer of 40 cm of graphite. The entire reflector region would be enclosed by niobium shells with niobium or molybdenum internal structure designed to prevent buckling of the shells and to provide flow passages for the lithium. This arrangement will permit removal of about 99.5% of the heat absorbed in the reflector region at a temperature of 1000°C. The reflector region would be surrounded by an evacuated zone 2 cm thick containing multifoil reflective insulation, and this would be surrounded by a region 76 cm thick consisting of borated water followed by 17.2 cm of lead in the outer zone to reduce the neutron and gamma energy deposition in the cryogenically cooled superconducting magnet coils to about 1 kw. These coils would be mounted just outside the water shield but isolated from it by an evacuated annulus containing 4 cm of thermal insulation with a liquid nitrogen-cooled buffer plate in the middle. Titanium hoops to hold the magnets in place would surround the magnet coils.

ORNL DWG. 69-6664

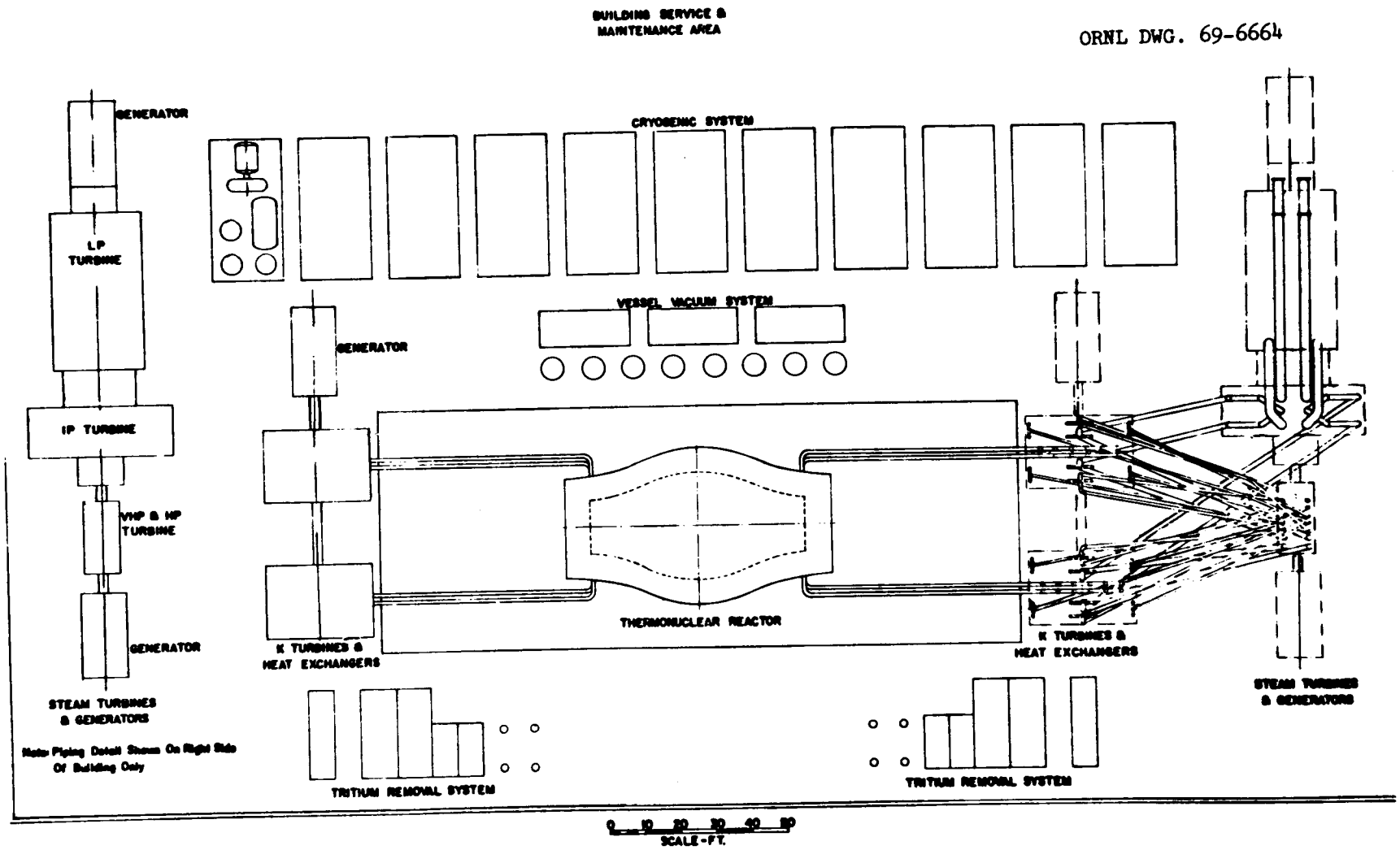

Fig. 1. Conceptual Layout for a Thermonuclear Power Plant Designed to Produce 5000 Mw(t) and 2800 Mw(e) Using a Potassium-Steam Binary Vapor Cycle. The vacuum wall is shown as 30 ft in diameter and 60 ft long. The building shown is 330 ft by 600 ft.

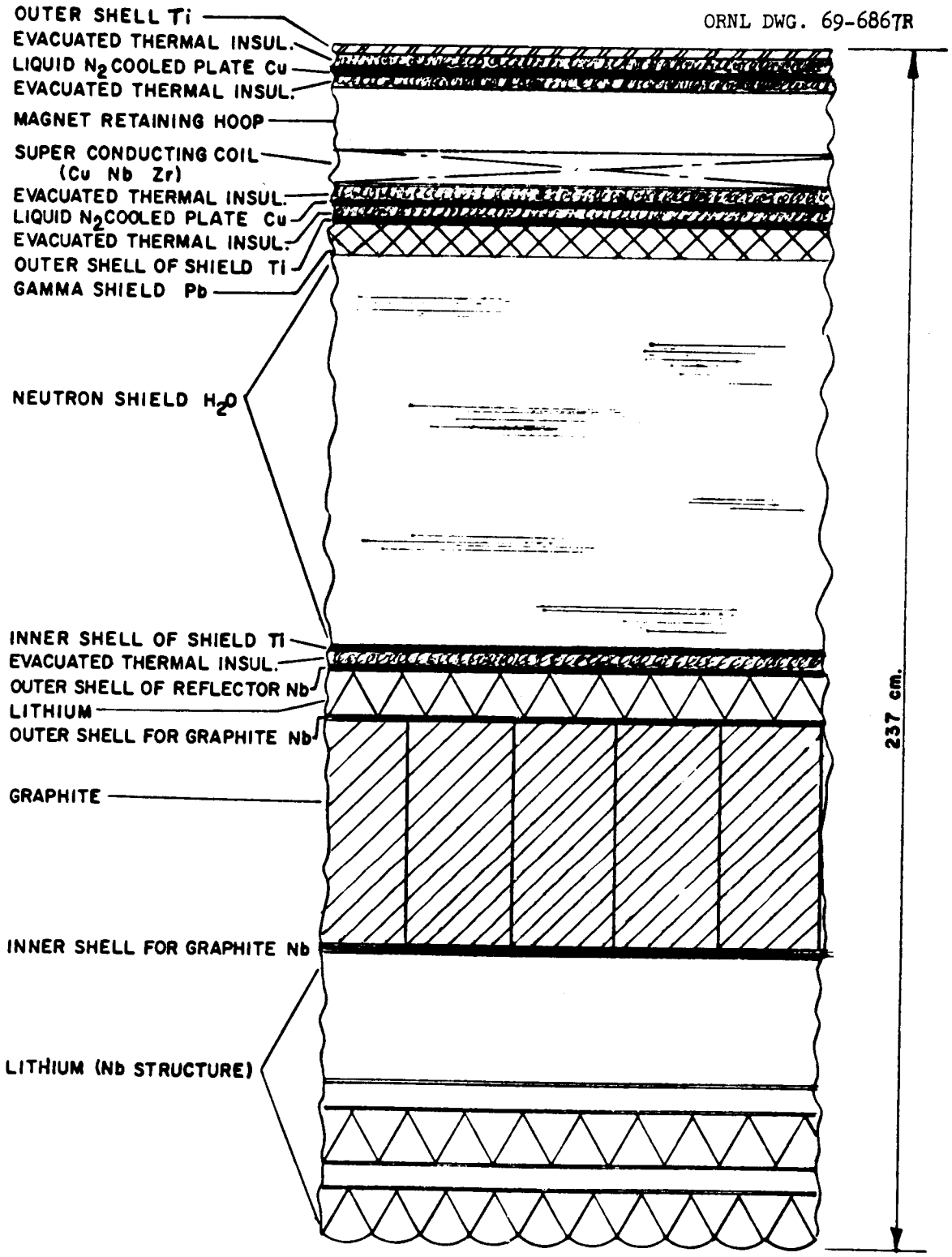

Fig. 2. Cross Section Through the Reflector-Shield-Superconducting Coil Region for the Conceptual Design of Fig. 1.

The entire assembly would be covered by another 4 cm layer of thermal insulation containing a liquid nitrogen-cooled buffer plate.

Power Conversion Equipment

An especially attractive means of converting the thermal energy generated in the reflector of a thermonuclear reactor into electrical energy is provided by a binary vapor cycle in which potassium is boiled at 1800°F, expanded through a turbine, and condensed at 1100°F.[4] The heat given up by the condensing potassium would be used to generate steam at 1050°F and 4000 psi, and this would be expanded through a conventional steam turbine. The proportions for the heat exchangers, turbines, and piping for this system were obtained by scaling up components employed in the design study of Ref. 4 assuming the layout of Fig. 1, which employs a pair of 1400 Mw(e) Rankine-cycle systems operating in parallel with the thermonuclear reactor heat source. In this approach it was assumed that the lithium in the reflector cooling circuit would heat potassium boilers installed at either end of the reactor. This arrangement has the advantage that, should it be necessary to close down one of the pair of Rankine-cycle systems, the temperature rise in the lithium circuit would remain the same, and hence no severe thermal stresses would be generated. Of course, the electrical output of the plant would be cut in half if one of the two systems were shut down.

Plant Layout

The layout of Fig. 1 shows the thermonuclear reactor, the turbines with their associated heat exchangers, and the connecting piping. As in a conventional steam plant, most of the auxiliaries for the Rankine cycle systems would be installed on the floor below that bearing the main turbines. Preliminary estimates of the size of the equipment required for the vacuum system, the tritium removal system,[1] and the cryogenic system for cooling the superconducting magnet coils have been made and floor space has been allocated accordingly for these systems. At this stage it is difficult to tell what equipment will be required for injecting the deuterium and tritium ions into the plasma, but it seems likely that the region between the two turbine halls will also be adequate to house that equipment.

The principal design data significant from the hazards standpoint are summarized in Table 1 for the plant of Fig. 1.

Tritium Removal System

When the layout delineated by Fig. 1 and Table 1 had been evolved, it became evident that one of the most important problems was presented by the tritium recovery system. Not only is it essential that the tritium be recovered efficiently so that the fusion reactor will show a net breeding gain, but it is also important that the tritium concentration in the niobium be sufficiently low so that the niobium structure would not be embrittled. Further, and of particular importance from the standpoint of this report, it was evident that the design should be such that tritium leakage to the biosphere would not constitute a serious problem.

A preliminary investigation using the permeation constants for hydrogen diffusion through different metals[7] as shown in Fig. 3 led to the conclusion that the rate of diffusion of the tritium through niobium would be so rapid that, whether one liked it or not, a large fraction would pass through the walls of the heat exchanger between the lithium and potassium circuits. This tritium would mix with the potassium vapor generated in the potassium boiler, go with the potassium through the turbine, and would enter the potassium condenser. The latter would also serve as the steam boiler, hence would have to be constructed of a material other than niobium in order to avoid difficulties with corrosion on the water side. Some preliminary experimental work at ORNL has indicated that stainless steel could be used in the low temperature end of a boiling potassium system constructed of niobium, and hence stainless steel was chosen for the tube material in the potassium condenser. As can be seen in Fig. 3, stainless steel at around 1000°F has a much lower permeability to hydrogen diffusion than niobium, thus inhibiting the loss of tritium to the steam system.

As can be seen from Fig. 3, the diffusion rate of hydrogen through materials becomes very low indeed at room temperature, hence diffusion losses from the low temperature portion of the system would be essentially

Table 1. Summary of Data for a Conceptual Design of a Fusion Reactor Power Plant Employing a Potassium-Steam Binary Vapor Cycle from which Tritium is Recovered as a Noncondensable

Reactor	
Design power output, Mw(t)	5,000
Vacuum wall diameter, m	10
Vacuum wall length, m	20
Surface area, m^2	500
Vacuum wall thickness, mm	3
Lithium reflector thickness, cm	60
Graphite reflector thickness, cm	40
Water shield thickness, cm	76
Lead shield thickness, cm	17
Superconducting coil thickness, cm	12
Titanium hoop	12
Electrical power output	
Potassium turbine-generator units, Mw	1,110
Steam turbine-generator units, Mw	1,690
Total, Mw	2,800
Tritium generation rate in Li, kg/day	1.0
cm^3(STP)/sec	43.2
System flow rates	
Lithium, kg/sec	25,000
Lithium transit time, sec	6
Potassium, kg/sec	2,500
Potassium transit time, sec	36
Steam, lb/hr	17×10^6
System temperatures	
Lithium to reflector, °F	1,825
Lithium out of reflector, °F	1,925
Potassium vapor into turbine, °F	1,800
Potassium vapor leaving turbine, °F	1,100
Vapor in secondary K condenser, °F	400
Potassium feed to boiler, °F	1,700
Steam to turbine, °F	1,050
Steam to condenser, °F	80
Feedwater to boiler, °F	600
System pressures	
Tritium leaving hydrogen window, mm	5×10^{-3}
Tritium entering hydrogen window, mm	10^{-2}
Tritium entering secondary K condenser, mm	3×10^{-4}
Tritium leaving main K condenser, mm	0.6×10^{-4}
Tritium in lithium system, mm	0.66×10^{-4}

Potassium in main K condenser, mm	115
Potassium in secondary K condenser, mm	10^{-2}
Potassium in potassium boiler, mm	4,140
Diffusion barriers	
Surface area in Li-to-K boiler, ft^2	75,000
Tube wall thickness in Li-to-K boiler, mm	1.0
Tube wall thickness in K condenser to H_2O boiler, mm	2.0
Ceramic coating thickness in K condenser to H_2O boiler, mm	0.2
Surface area in primary K condenser, ft^2	160,000
Surface area in secondary K condenser, ft^2	500
Permeation rates	
Permeation rate through hydrogen window, $cm^3(STP)/cm^2 \cdot sec$	2.5×10^{-6}
Permeation rate through hydrogen window, $cm^3(STP)/sec$	43.2
Permeation rate through K condenser-steam boiler, $cm^3(STP)/sec \cdot cm^2$	6.3×10^{-14}
Permeation rate through K condenser-steam boiler, $cm^3(STP)/sec$	9.3×10^{-6}
Permeation rate through Li-to-K boiler, $cm^3(STP)/sec \cdot cm^2$	0.62×10^{-6}
Permeation rate through Li-to-K boiler, $cm^3(STP)/sec$	43.2
Hydrogen window to tritium pumps	
Surface area in hydrogen window, ft^2	18,600
Tube wall thickness in hydrogen window, mm	1.0
Tube diameter in hydrogen window, in.	1.0
Tube length in hydrogen window, ft	20
Number of tubes	7,260
Material inventories	
Li inventory in blanket system, kg	150,000
Niobium inventory in Li system, kg	180,000
Potassium inventory, kg	90,000
Tritium inventory in potassium, kg	0.060
Tritium inventory in lithium, kg	1.66
Tritium inventory in niobium, kg	0.166
Tritium concentration in niobium, ppm	19
Vacuum pumps	
First stage compression ratio	100
Number of Roots blowers in parallel	2
Second stage compression ratio	50
Number of Roots blowers	1
Third stage compression ratio	7
Number of Roots blowers	1
Forepump inlet pressure, mm	35
Forepump discharge pressure, mm	760
Number of oilless forepumps	1

ORNL DWG. 68-12758

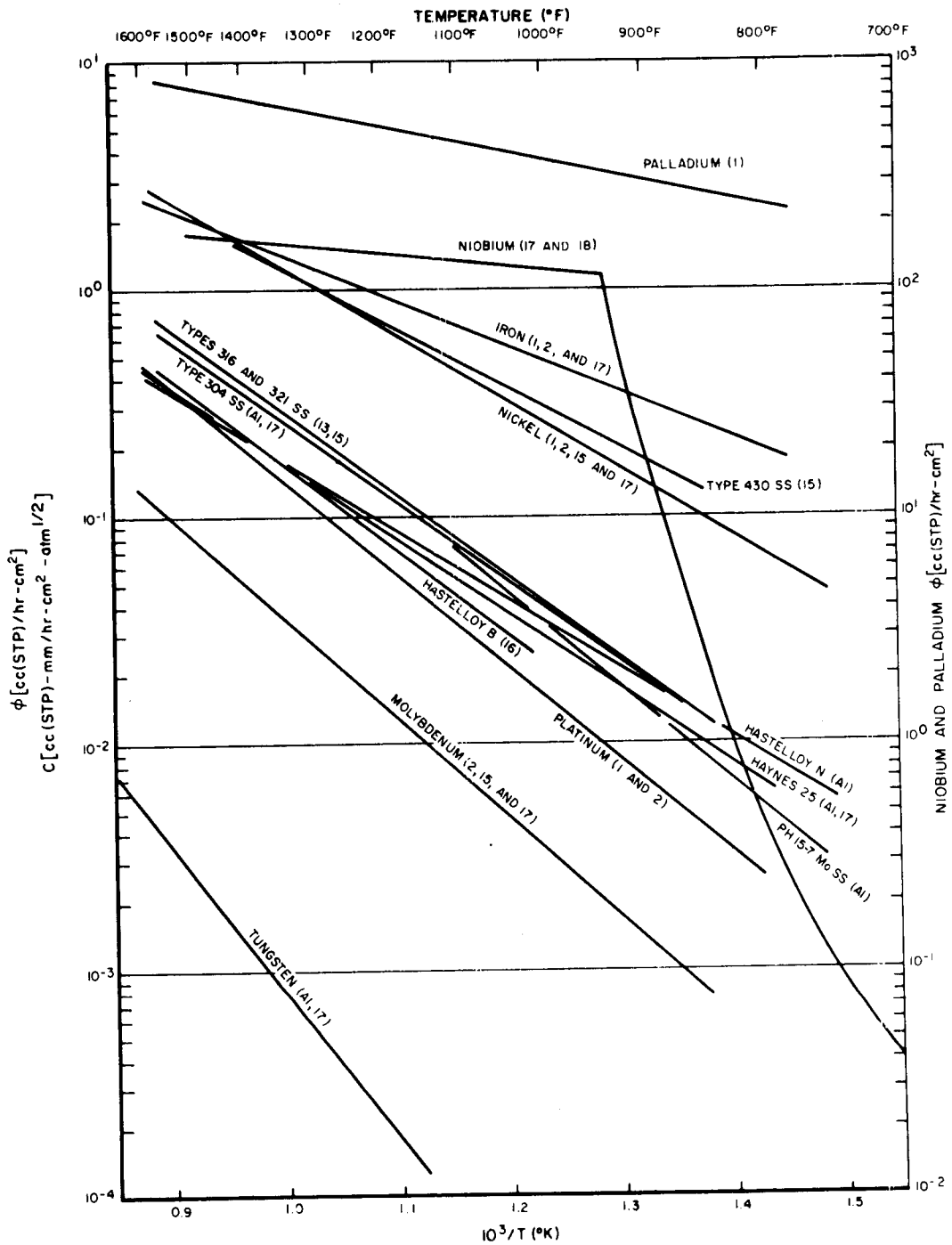

Fig. 3. Effects of Temperature on Permeation Constants for Typical Metals and Alloys. USE THE RIGHT SCALE FOR NIOBIUM AND PALLADIUM AND THE LEFT SCALE FOR ALL OTHERS. (Taken from Ref. 7.)

nil, especially since its surface area would be relatively small. It must be emphasized, however, that only by deliberately maintaining a very low tritium partial pressure in the potassium system can the tritium inventory in the lithium and potassium systems be kept to a low level and the rate of tritium diffusion into the steam system be kept to an acceptable value.

Removal of Tritium as a Noncondensable

A preliminary design for a tritium recovery system based on drawing off the tritium as a noncondensable from the potassium system was reported in Ref. 1. This entails design of the condenser for the potassium vapor to give a flow pattern such that the tritium would be swept through the heat transfer matrix and concentrated in the last portion of the potassium vapor to condense. The residual mixture of tritium and potassium vapor would be drawn off from the low temperature end of the main, or primary, potassium condenser in much the same way as noncondensables are drawn off from a steam condenser with an air ejector in a conventional steam power plant. The tritium-potassium vapor mixture leaving the main potassium condenser would be carried to a secondary potassium condenser operated at a temperature of 400°F to reduce the partial pressure of the potassium to about 10^{-3} torr. The noncondensables would then be compressed by an ejector and fed to a palladium or niobium "window," or "kidney" through which the tritium would diffuse. Rootes blower vacuum pumps and a forepump would then compress it up to well above atmospheric pressure for storage. The system flow sheet envisioned is shown in Fig. 4.

The tritium removal system presented here differs somewhat from that in Ref. 1 as a consequence of several refinements of the analysis and a few modifications to the system. The most important of the latter is the addition of a layer of 0.008 in. of a plasma-sprayed ceramic such as Al_2O_3 on the ID (steam side) of the tubes in the potassium condenser-steam generator. Some limited data indicates that this should reduce the diffusion rate of tritium into the steam system by a factor of about

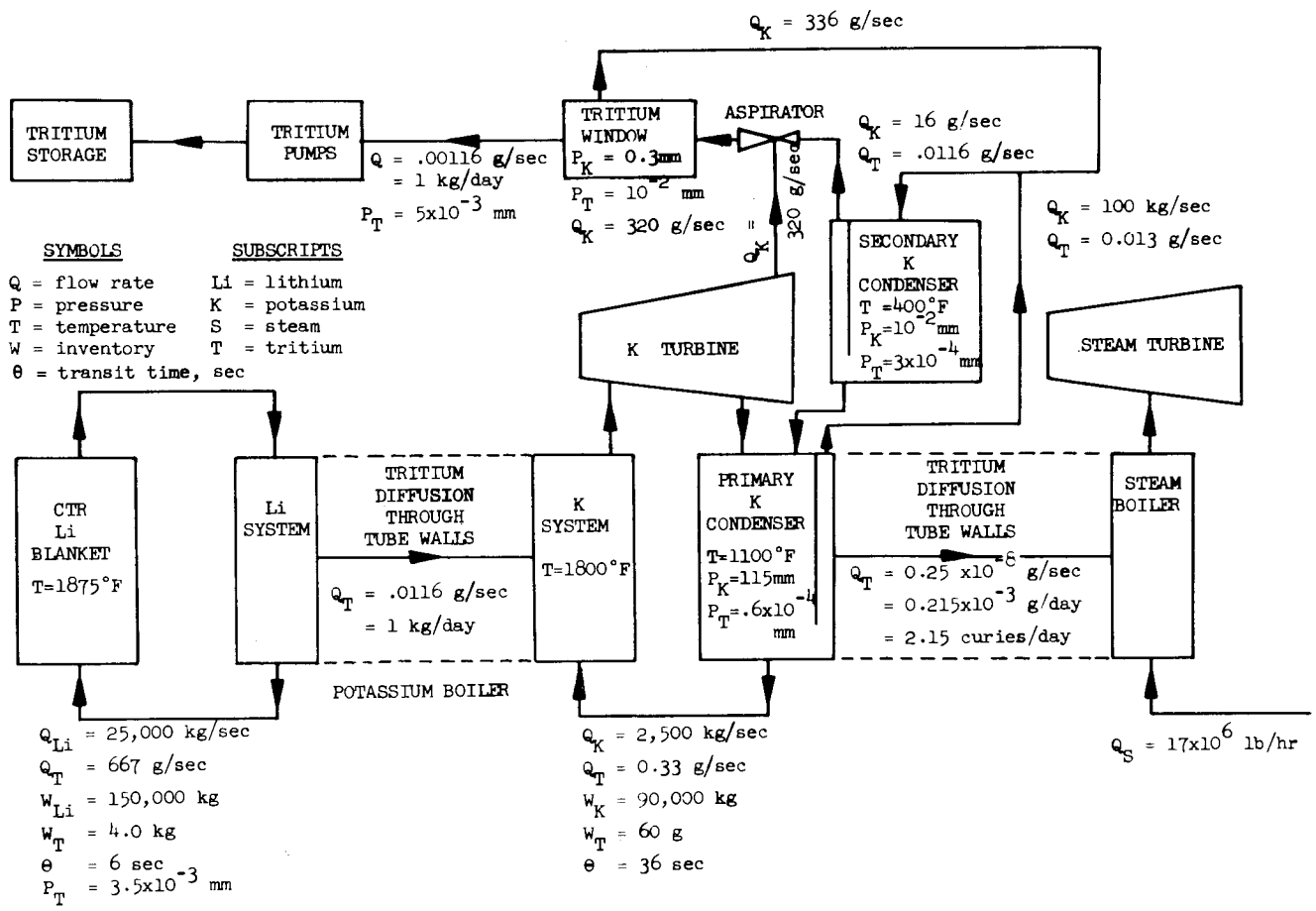

Fig. 4. Flow Sheet for the Tritium System of the Thermonuclear Reactor of Fig. 1 and Table 1.

100. In addition, advantage was taken of ejector and diffusion pump effects to permit reductions in the partial pressure of the tritium in the primary and secondary potassium condensers without increasing the size of the hydrogen window.

Method of Calculating Permeation Rates

The method of calculating the permeation rates used in Ref. 1 was modified for this study. In the analysis of Ref. 1 it was assumed on the basis of data in Ref. 7 that the permeation rate through all of the metals considered varies directly as the difference between the square roots of the upstream and downstream hydrogen partial pressures down to a pressure of 10 mm, and then varies linearly with the pressure as the partial pressure of hydrogen is further reduced. This was considered to be a conservative assumption at the time that Ref. 1 was prepared because it gave a greater tritium inventory than would be the case if the square root relation were applied down to the lowest pressures of interest. However, the assumption is not conservative with respect to tritium leakage into the steam system, and this now appears to be a more important consideration than the size of the tritium inventory. R. B. Briggs and R. A. Strehlow pointed out to the writer that Ref. 8 showed that the hydrogen permeation rate through tungsten and molybdenum varies as the square root of the partial pressure of hydrogen down to pressures as low as 10^{-6} mm. In view of the similarity in properties of niobium, molybdenum, and tungsten it seemed in order to make a new analysis assuming that the hydrogen permeation rate through niobium varies as the square root of the hydrogen pressure throughout the range of interest here.

Unfortunately, very few data are available on hydrogen permeation rates through iron-chrome-nickel alloys at pressures below 10 mm. It is clear that oxide coatings greatly reduce the permeation rate, and Refs. 7, 9, and 10 indicate that for thin iron-chrome-nickel alloy membranes there is a shift from the square root to an approximately linear relationship at some low pressure. This stems from the fact that recombination of the atomic hydrogen in the crystal lattice to form the molecular

hydrogen that leaves the low pressure surface becomes the rate controlling step rather than diffusion through the metal. Decreases in the membrane thickness, the hydrogen pressure at the exit face, or the temperature act to make the recombination rate more important and the diffusion rate less important from the standpoint of the over-all permeation rate.[9] In view of the many uncertainties it is evident that any decision must be arbitrary, and, lacking any better data, it was decided to base a set of calculations on the data of Ref. 7 and indications that the permeation rate through stainless steel coated with a ceramic on the low pressure face varies linearly with the pressure below 10 mm.

Diffusion Pump and Ejector Effects

The diffusion pump and ejector effects cited above are a bit subtle and deserve some explanation. Turning first to the ejector, it is standard practice in conventional steam power plants to make use of an air ejector to remove noncondensables – principally air – from the main condenser. This is done in part to prevent the condenser from becoming loaded with air which would seriously detract from its heat transfer performance, and in part to minimize the oxygen concentration in the recirculated feedwater and thus reduce corrosion. This air ejector is driven by steam and operates in much the same way as the aspirator used in chemical laboratories to produce a partial vacuum by using a source of compressed air or tap water at a pressure of 15 to 50 psi. In either case, the principle of operation makes use of the low pressure region at the throat of a venturi. The jet of compressed air, steam, or water is directed into the throat of the venturi. A gas side stream flows from the region to be evacuated into the venturi throat. Units of this sort are commonly capable of a pressure ratio of about 10 to 1, i.e., they will yield an absolute pressure in the evacuated region of about 3 in. of mercury. Data for some typical steam power plant air ejectors driven by steam are given in Ref. 11, and show this capability of yielding a pressure ratio of about 10 to 1 per stage.

The same basic principle is employed in ordinary vacuum diffusion pumps where boiling of a fluid such as mercury or silicone oil is used

to drive a jet of vapor through a venturi and induce flow of a side stream from the region to be evacuated. A stage pressure ratio of the order of 10 can be obtained at pressures down to about 10^{-6} torr.

In employing these effects to improve the performance of tritium removal system, the first obvious step was to employ an ejector in the tritium discharge region of the secondary potassium condenser (see Fig. 4). A second and less obvious application of this basic concept is the use of a diffusion pump effect in obtaining an increase in the partial pressure of the tritium in going from the primary to the secondary potassium condenser. The large drop in potassium vapor pressure between these two components can be employed to effect an increase in the partial pressure of the tritium. An additional subtle factor that was recognized in the analysis but not taken advantage of in making the calculations is that the potassium vapor stream sweeping through the condensers can be made to yield a substantially higher tritium partial pressure at the tritium outlet from the unit than would prevail in the bulk of the condenser. This would reduce the average partial pressure of the tritium in the condenser and hence would reduce the concentration of tritium dissolved in the liquid potassium condensate leaving the condenser. However, the magnitude of this effect is difficult to estimate analytically, and hence no allowance for it was made in the calculations. The effect, however, should lead to both a reduced inventory of tritium in the potassium and a lower diffusion rate of tritium through the condenser walls into the steam system.

Calculations

A set of calculations taking advantage of some of the diffusion pump effects outlined above was carried out and is summarized in Table 2. As discussed in a previous section the permeation rate of tritium through the tube walls of the niobium heat exchanger was taken as varying as the square root of the partial pressure of the tritium irrespective of pressure, whereas in the stainless steel tubes of the potassium condenser-steam boiler (with a ceramic coating on the steam side) the permeation rate was taken as varying linearly with hydrogen pressure for partial pressures below 10 mm.

Table 2. Summary of Calculations for the Tritium Permeation Rates in the System of Fig. 4.

Region	Temperature (°F)	Wall Thickness (mm)	Diffusion Constant $\left(\frac{cm^3(STP)-mm}{hr-cm^2-atm^{0.5}}\right)$	Partial Pressure of Potassium (mm)	Partial Pressure of Tritium (mm)	Tritium Permeation Rate (cm^3(STP)/sec-cm^2)	Total Tritium Permeation Through Unit (cm^3(STP)/sec)	Surface Area for Diffusion (cm^2)
Hydrogen Window		1.0	150					17.3×10^6
Out	1200			0.0	5.00×10^{-3}		43.2	
In	1200			0.3	10^{-2}	2.50×10^{-6}	43.2	
Secondary K Cond.		0.2*	8×10^{-5}					464
Out	400			0.01	3.00×10^{-4}		43.2	
In	400			0.01	3.00×10^{-4}		43.2	
Primary K Cond.		0.2*	8×10^{-5}					148.3×10^6
Out	1060			100	0.60×10^{-4}		43.2	
In	1100			115	0.60×10^{-4}		43.2	
Steam	1050					6.30×10^{-14}	9.3×10^{-6}	
Li-K Boiler		1.0	190			0.62×10^{-6}		69.5×10^6
Out	1800			4140	0.66×10^{-4}		43.2	
In	1875				0.60×10^{-4}		43.2	

*Thickness of ceramic layer only because that is the principal barrier to diffusion of tritium through the tube wall.

NOTE: A typical permeation rate through a 1 mm thick Nb tube wall with a tritium pressure of 10 mm Hg upstream and 0 mm downstream as derived from Ref. 7 is: Permeation rate = 0.00495 cm^3(STP)/sec-cm^2 (for H_2).

A second analysis was made to determine the system proportions assuming that the tritium permeation rates through all of the materials employed vary as the square root of the pressure down to the lowest pressure considered. On this basis it was necessary to employ a partial pressure of tritium in the potassium system of 10^{-6} mm, and this gave a tritium volume flow rate so high that the flow passage area required for the tritium recovery system would be excessive, and the equipment required in the tritium recovery system would be very bulky and expensive.

Tritium Removal with Cold Traps

In view of the uncertainty as to whether the permeation rate varies linearly or as the square root of the partial pressure of hydrogen at very low pressures, it seemed important to investigate some better means of removing tritium from the potassium system than the approach of the previous section. A review of the literature, particularly Ref. 12, indicated that cold trapping would be a good basis for the design of a tritium removal system. This stems from the fact that the solubility of tritium in potassium falls off rapidly as the temperature is reduced, so that potassium tritide can be removed with a cold trap and filter system. Even better performance can be obtained by an A.E.C. patented process that involves adding a small amount of lithium to the potassium.[13] This is very effective because of both the much stronger affinity of hydrogen for lithium and the lower solubility of the lithium tritide in potassium.[12,13] In view of the fact that there is a substantial amount of data available on normal hydrogen in potassium and lithium but very little on tritium in potassium, the calculations were carried out first for normal hydrogen and, subsequently, corrections were applied to convert the results to the tritium case. The system envisioned is shown in Fig. 5, and data for it are presented in Table 3. Note that, to avoid the uncertainties associated with the permeation rate through stainless steel tubes coated with a ceramic film on the steam side, a layer of vapor-deposited tungsten on the potassium side was employed to reduce the tritium permeation rate.

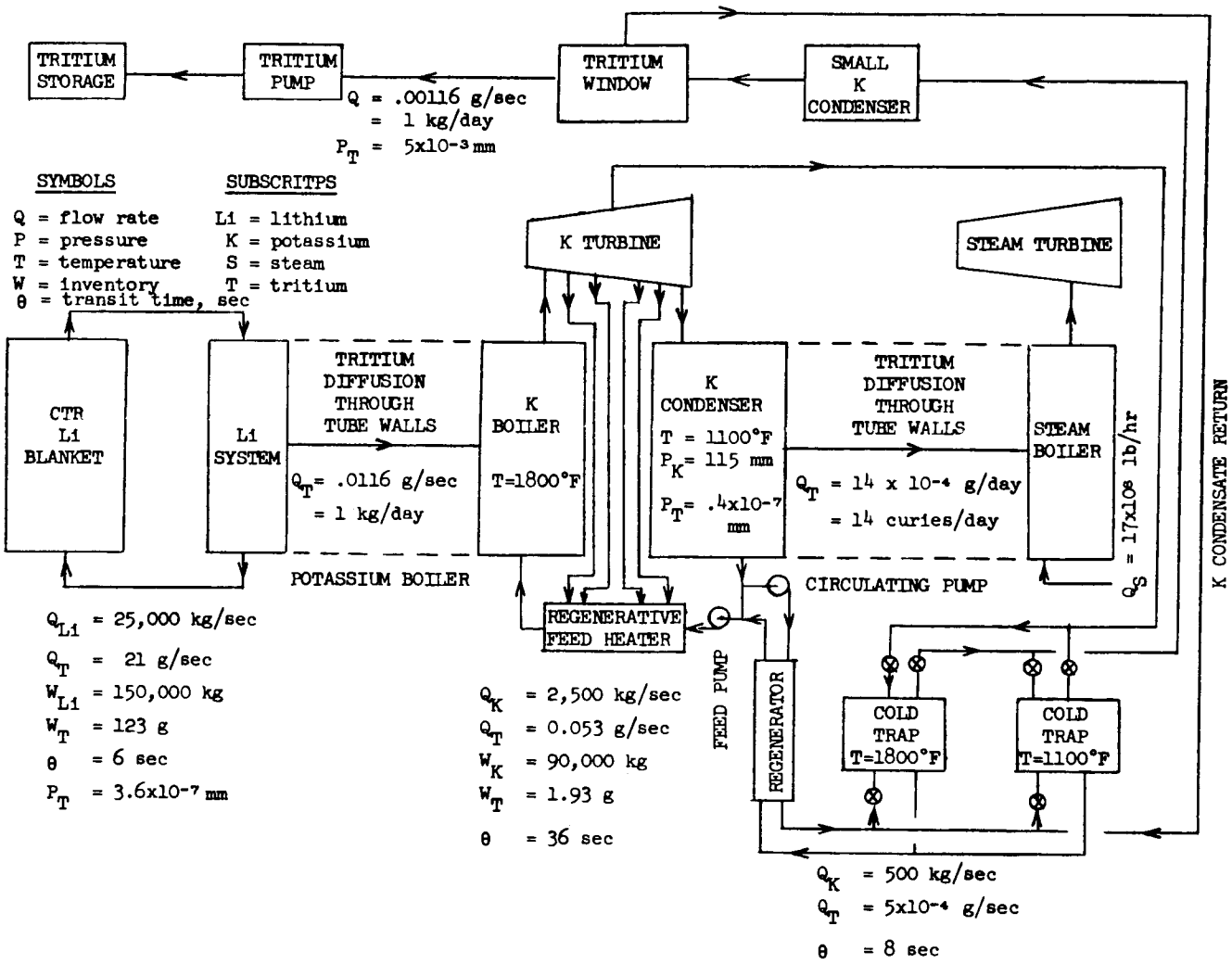

Fig. 5. Cold Trap System for Removing Tritium from a Controlled Fusion Reactor.

Table 3. Summary of Data for a Conceptual Design of a Fusion Reactor Power Plant Employing a Potassium-Steam Binary Vapor Cycle from which Tritium is Recovered by Cold Trapping

Reactor	
Design power output, Mw(t)	5,000
Vacuum wall diameter, m	10
Vacuum wall length, m	20
Surface area, m^2	500
Vacuum wall thickness, mm	3
Lithium reflector thickness, cm	60
Graphite reflector thickness, cm	40
Water shield thickness, cm	76
Lead shield thickness, cm	17
Superconducting coil thickness, cm	12
Titanium hoop thickness, cm	12
Electrical power output	
Potassium turbine-generator units, Mw	1,110
Steam turbine-generator units, Mw	1,690
Total, Mw	2,800
Tritium generation rate in Li, kg/day	1.0
cm^3(STP)/sec	43.2
System flow rates	
Lithium, kg/sec	25,000
Lithium transit time, sec	6
Potassium, kg/sec	2,500
Potassium transit time, sec	36
Potassium bypass flow to tritium cold traps, kg/sec	500
Steam, lb/hr	17×10^6
System temperatures	
Lithium to reflector, °F	1,825
Lithium out of reflector, °F	1,925
Potassium vapor into turbine, °F	1,800
Potassium vapor leaving turbine, °F	1,100
Potassium feed to boiler, °F	1,700
Potassium into cold trap, °F	180
Steam to turbine, °F	1,050
Steam to condenser, °F	80
Feedwater to boiler, °F	600
Temperature difference across regenerator in cold trap system, °F	50
System pressures	
Tritium entering main K condenser, mm	0.4×10^{-7}
Tritium in lithium system, mm	3.6×10^{-7}
Potassium in main K condenser, mm	115
Potassium in small K condenser, mm	10^{-2}
Potassium in potassium boiler, mm	4,140

Table 3 (contd)

Diffusion barriers	
Surface area in Li-to-K boiler, ft^2	75,000
Tube wall thickness in Li-to-K boiler, mm	1.0
Surface area in K condenser-H_2O boiler, ft^2	160,000
Tube wall thickness in K condenser-H_2O boiler, mm	2.0
Tungsten coating thickness in K condenser-to-H_2O boiler, mm	0.3
Surface area in regenerators for tritium cold trap system	5,000
Tritium permeation rates	
Permeation rate through K condenser-steam boiler, $cm^3(STP)/sec.cm^2$	4×10^{-13}
Permeation rate through K condenser-steam boiler, $cm^3(STP)/sec$	6×10^{-5}
Permeation rate into steam, curies/day	14
Permeation rate through Li-to-K boiler, $cm^3(STP)/sec.cm^2$	0.62×10^{-6}
Permeation rate through Li-to-K boiler, $cm^3(STP)/sec$	43.2
Material inventories	
Li inventory in blanket system, kg	150,000
Niobium inventory in Li system, kg	180,000
Potassium inventory, kg	90,000
Tritium inventory in potassium, g	1.93
Tritium inventory in lithium, kg	0.123
Tritium inventory in niobium, kg	0.012
Tritium concentration in niobium, ppm	1.5
Regenerative heat exchangers for tritium cold traps	
Number of units	2
Tube diameter, in.	0.375
Tube length, ft	20
Number of tubes	3,600
Tube bundle diameter, in.	21

Cold Trap Effectiveness

The first step in the study was to estimate the hydrogen concentration in the potassium system assuming a full flow cold trap and filter arrangement neglecting the increased hydrogen content of the system as a consequence of hydrogen additions in the potassium boiler. Inasmuch as no comprehensive set of data could be found in the literature for the concentration of KH in potassium as a function of both temperature and hydrogen overpressure, data presented in Ref. 12 for 22% Na–78% K were employed. The limited data available[14,15] indicate that the solubility of KH in potassium is about the same as NaH in Na, hence use of the data for NaK should give an acceptable approximation for the purposes of this study. Extrapolation of Fig. 6 on p. 167 of Ref. 12 indicates that at 180°F the hydrogen concentration in the potassium would be 0.001 ppm at 180°F (the melting point of potassium is 144.5°F). On this basis, with a potassium inventory of 90,000 kg the hydrogen inventory in the potassium system becomes 0.09 g. Assuming that tritium would have the same molal solubility in potassium as hydrogen, the weight of tritium in the potassium system then would be 0.27 g.

The tritium added to the potassium in the potassium boiler as a consequence of diffusion from the lithium system amounts to 1 kg/day, or 0.01157 g/sec. Inasmuch as the potssium transit time through the potassium system is estimated to be 36 sec, the total tritium addition per transit would be 0.416 g/transit.

If 20% of the potassium flow is bypassed through a cold trap, the tritium inventory in the potassium will be increased to about 1.93 g, or 0.0215 ppm by weight. The corresponding concentration of H_2 would be 0.0072 ppm.

Diffusion of T_2 into the Steam System

According to Ref. 12, p. 172, the partial pressure of hydrogen over potassium saturated with potassium hydride is given by:

$$\log_{10} P_{mm} = 11.69 - \frac{6175}{820} = 4.16; \qquad P = 14{,}450 \text{ mm}$$

ORNL-DWG 70-4803

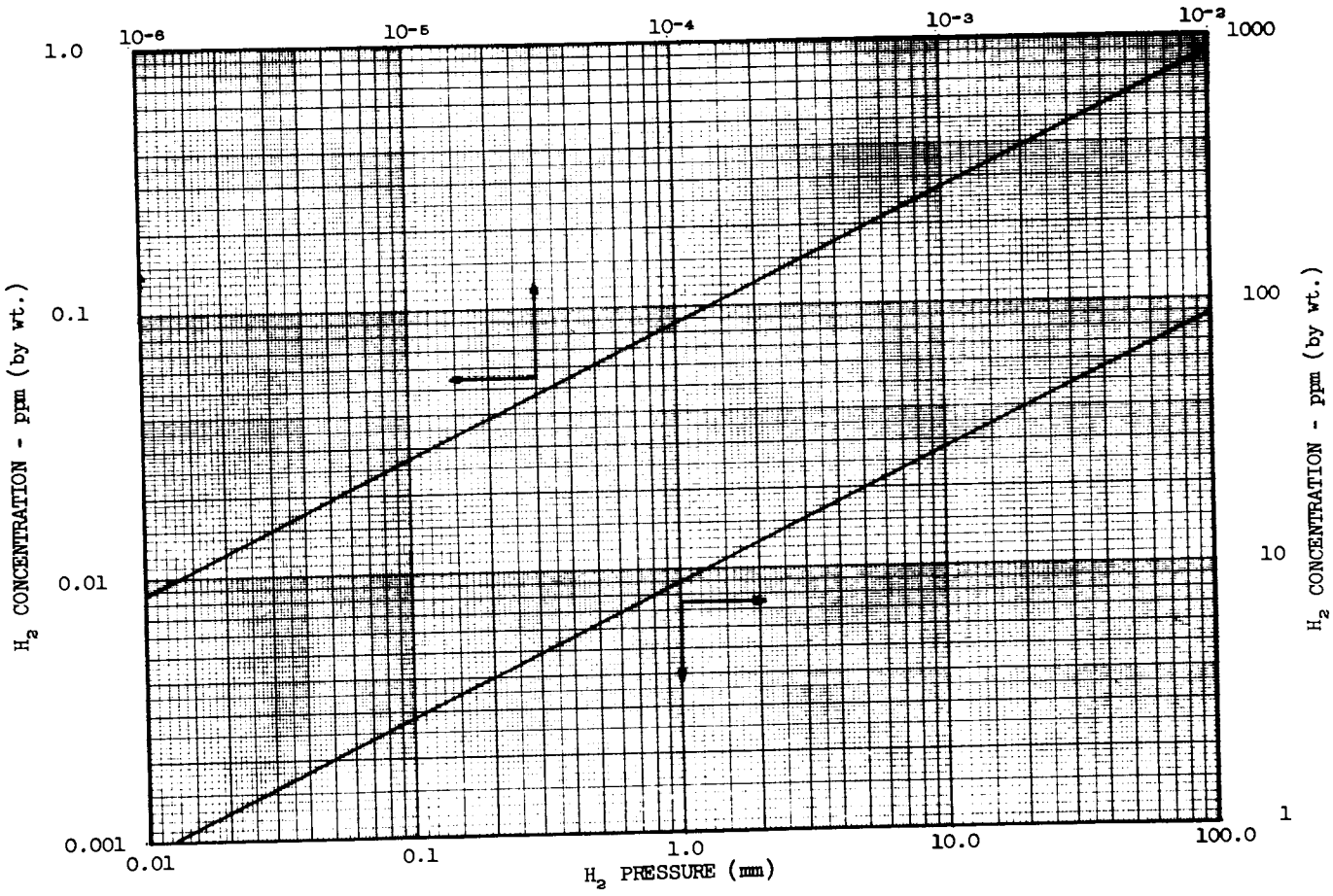

Fig. 6. Concentration of H_2 in 22% Na-78% K at 1100°F. (Data from Ref. 12, p. 155.)

Figure 6 was prepared by extrapolating Fig. 15, p. 155 of Ref. 12. From it one finds that the corresponding hydrogen concentration in the potassium is 1050 ppm. Inasmuch as the hydrogen concentration varies as the square root of the partial pressure, for an H_2 concentration of 0.0072 ppm, the partial pressure becomes 1.2×10^{-6} mm. Addition of about 3% lithium to the potassium system should reduce the partial pressure by at least a factor of ten (see Ref. 12, p. 159), hence the effective partial pressure of the hydrogen over the potassium would be reduced to 1.2×10^{-7} mm.

The hydrogen permeation rate through the tungsten coating on the stainless steel tube walls to the steam, using the square root relationship between the permeation rate and the partial pressure indicated by Ref. 8, is given by:

$$\text{Permeation rate} = \frac{8 \times 10^{-11}}{(\text{wall thickness-cm})} \times \sqrt{\text{Partial pressure of } H_2\text{-mm}} \; \frac{\text{Torr liters}}{\text{cm}^2\text{.sec}}$$

For a partial pressure of hydrogen of 1.2×10^{-7} mm and a tungsten thickness of 0.3 mm, the permeation rate becomes:

$$\text{Permeation rate} = \frac{8 \times 10^{-11}}{0.03} \sqrt{1.2 \times 10^{-7}}$$

$$= 0.923 \times 10^{-12} \text{ Torr liters/cm}^2\text{.sec}$$
$$= 1.21 \times 10^{-12} \text{ cm}^3\text{(STP)/sec.cm}^2$$
$$= 4.36 \times 10^{-9} \text{ cm}^3\text{(STP)/hr.cm}^2$$

The total hydrogen flow into the steam then becomes:

$$\text{Hydrogen flow} = \frac{4.36 \times 10^{-9} \times 1.5 \times 10^{8} \times 2 \times 24}{22{,}400}$$

$$= 14 \times 10^{-4} \text{ g } {}^1H_2\text{/day}$$

In converting the above values to the permeation rate for tritium, it is instructive to look at Ref. 14, p. 2020 which shows that the partial

pressure of deuterium for saturation of KD in potassium is about 1/2 that for $^1H_2$ over KH in potassium at any given temperature. From this it would appear that the partial pressure of tritium over a saturated solution of KT in potassium should be about one-third that for $^1H_2$. The solubility of KT and LiT should be about the same in potassium as KH and LiH. The permeation rate for tritium through the tungsten layer on the stainless steel tube walls should be reduced relative to that for $^1H_2$ by a factor of $\sqrt{3}$. Thus the $^1H_2$ permeation rate into the steam as estimated above can be converted to a T_2 permeation rate as follows:

$$T_2 \text{ flow rate} = (H_2 \text{ flow rate}) \sqrt{\frac{\text{Permeation rate of T}}{\text{Permeation rate of H}}} \times \sqrt{\frac{\text{Press of } T_2}{\text{Press of } H_2}} \left(\frac{\text{mol wt of } T_2}{\text{mol wt of } H_2}\right)$$

$$T_2 \text{ flow rate} = (14 \times 10^{-4}) \left(\frac{1}{\sqrt{3}}\right)\left(\frac{1}{\sqrt{3}}\right) 3 = 14 \times 10^{-4} \text{ g/day}$$

Inasmuch as the activity of one gram of tritium is equivalent to about 10^4 curies, the amount of tritium activity entering the steam system would correspond to about 14 curies/day. This is a very low rate, and, as shown in Ref. 16, is well below a reasonable tolerance level.

Uncertainties in the Analysis

In reviewing the above analysis in an effort to appraise the uncertainties a number of points become evident. If the permeation rate of hydrogen through stainless steel is a linear rather than a square root function of the partial pressure for pressures below about 10 mm, the permeation rate would be greatly reduced. The calculations are also conservative in that they were based on permeation coefficients obtained with metal tube walls completely free of oxide films; the oxide film on the steam side of the boiler tubes would certainly act to reduce the tritium diffusion rate. This would be even more likely to be the case if the steam side of the tubes were coated with a thin but adherent and nonporous film of a ceramic such as aluminum or titanium oxide. These

oxide films should be quite resistant to attack by the steam, whereas glassey enamels probably would not be. Such oxide films are now being produced commercially by a new plasma spray technique. Tests will be required to determine whether these coatings might be sufficiently effective to permit elimination of the tungsten layer. It would be particularly desirable to use Al_2O_3 for the coating because its thermal conductivity is sufficiently high that it would not increase the temperature drop through the tube wall significantly. Under any circumstances, new experimental data are badly needed for permeation of hydrogen through niobium and through stainless steel having a thin, dense, pore-free layer of oxide at hydrogen partial pressures of as low as 10^{-6} mm.

An additional uncertainty stems from the fact that the analysis was based on experimental data for the relationships between the partial pressure of hydrogen, the concentrations of LiH and KH in 22% Na–78% K, and the solubility of LiH in potassium as a function of temperature. It was assumed that these relations would be the same as for 97% K-3% Li, but no experimental data are available to substantiate this.

Tritium Diffusion Through System Walls

It was thought at first that the rate of diffusion of tritium through the niobium casing to the vacuum region surrounding the reactor might be sufficiently high so that this would serve as the main channel for tritium recovery. It soon became evident that, while a portion of the tritium would indeed follow this path, the enormous difference in surface areas coupled with substantial differences in wall thicknesses would cause the bulk of the tritium to diffuse through the walls of the heat exchanger between the lithium and potassium circuits. However, roughly 1% would diffuse into the space between the niobium shell containing the lithium blanket region and the lead-water shield. This space would be evacuated to protect the niobium from oxidation. In development test work with niobium-encased lithium and potassium systems at ORNL the usual practice has been to surround the niobium system with a vacuum of at least 10^{-6} torr to protect the niobium, and this

procedure was assumed for the conceptual design of Fig. 1 and Table 1. Tritium diffusing into this region would be drawn off by vacuum pumps that would compress and deliver it to the main tritium stream drawn from the potassium condenser.

Inasmuch as inleakage of oxygen and/or water vapor to the evacuated regions might result in the formation of some HTO, it would also be necessary to remove moisture with aluminum oxide dryer equipment to assure that the tritium content of the effluent gases discharged to the atmosphere would be well below tolerances.

Back Diffusion of Hydrogen from the Steam System

The difficulties posed by the diffusion of tritium into the steam system raise questions as to the extent to which back diffusion of hydrogen from the steam system might occur and lead to dilution of the tritium by normal hydrogen. This could occur as a consequence of oxidation of the metal in the steam generator tube walls by steam, release of hydrogen, and diffusion of the hydrogen through the tube wall into the potassium system. It has been shown that the corrosion rate by steam inside of a steel boiler tube can be measured quantitatively by measurement of the rate of hydrogen effusion from the outside of the boiler tube.[17] Data presented in Ref. 16 indicate that, for a system having a boiler tube matrix of the proportions considered here, the back diffusion of normal hydrogen through plain stainless steel tubes would amount to 1.5 kg/year at a steam temperature of 600°F. In searching for data at the higher temperature of interest in this study, it was found in Ref. 18 that the corrosion rate for type 316 stainless steel amounts to $\sim$ 0.0003 in./year. This corresponds to a hydrogen generation rate of $\sim$40 kg/year so that the hydrogen in-leakage to the potassium system would amount on an annual basis to about 25% of the tritium production.

Use of a tungsten coating on the potassium side of the tube walls would inhibit this back diffusion to a substantially lower level, but it is difficult to estimate just how great the reduction might be. However, even without taking credit for this possibility, it appears that coping with the dilution would not be too expensive. Inasmuch as

the system would operate with an inventory of only about 5 kg of tritium, one could make use of an isotope separation process at intervals of a week or two to separate the normal hydrogen from the tritium to avoid excessive dilution. The cost of this isotope separation process ought not be high in view of the low cost of separating deuterium from normal hydrogen. Not only would the mass difference between tritium and normal hydrogen be much greater, but the concentration of tritium in the mixture of tritium and normal hydrogen would be vastly more favorable than is the case for the deuterium-normal hydrogen ratio in ordinary water.

If a ceramic coating were applied to the steam side of the tubes in the potassium condenser-steam boiler, both the corrosion rate and the back diffusion rate of hydrogen should be reduced drastically. Thus it would be desirable to apply such a coating not only to reduce the tritium leakage rate into the steam system but also to reduce the dilution of the main tritium inventory by normal hydrogen.

Summary

A review of the material presented above indicates that cold trapping lithium tritide from the potassium system of the fusion reactor plant described in Ref. 5 offers the most promising type of tritium recovery system. It appears to give the smallest total tritium inventory, the lowest tritium leakate rate to the steam, and the lowest capital cost of any of the proposed systems that the writer has considered or reviewed. Its principal disadvantage appears to be the extra control complication entailed by the requirement for alternate operation of the cold traps so that one set is taking lithium tritide out of the potassium while the other set is being heated to drive off the tritium so that it can be collected and recycled.

This study points up the need for experimental data on permeation rates of hydrogen through relatively thin iron-chrome-nickel alloy tube walls at pressures down to 10^{-6} mm, particularly with oxide or other ceramic coatings on the low pressure side, and on the solubility of KH and LiH in potassium at temperatures around 100°C.

References

1. A. P. Fraas, A Diffusion Process for Removing Tritium from the Blanket of a Thermonuclear Reactor, USAEC Report, ORNL-TM-2358, Oak Ridge National Laboratory, December 1968.

2. Riaz Farookhi and J. E. Rogers, Methods of Tritium Recovery from Molten Lithium, USAEC Report ORNL-MIT-66, Dec. 18, 1968, Oak Ridge National Laboratory.

3. E. F. Johnson, Overall Tritium Balances in Thermonuclear Power Reactors, paper for the Nuclear Fusion Reactor Conference, Sept. 17–19, 1969, British Nuclear Energy Society.

4. W. R. Chambers, A. P. Fraas, and M. N. Ozisik, A Potassium-Steam Binary Vapor Cycle for Nuclear Power Plants, USAEC Report ORNL-3584, Oak Ridge National Laboratory, May 1964.

5. A. P. Fraas, Conceptual Design of a Fusion Power Plant to Meet the Total Energy Requirements of an Urban Complex, paper for the Nuclear Fusion Reactor Conference, Sept. 17–19, 1969, British Nuclear Energy Society.

6. D. J. Rose, On the Feasibility of Power by Nuclear Fusion, USAEC Report ORNL-TM-2204, Oak Ridge National Laboratory, May 1968.

7. R. W. Webb, Permeation of Hydrogen Through Metals, USAEC Report NAA-SR-10462, Atomics International, July 25, 1965.

8. R. Frauenfelder, Permeation of Hydrogen Through Tungsten and Molybdenum, USAEC Report WERL-2823-27, Westinghouse Research Laboratories, June 23, 1967.

9. J. R. Phillips and B. F. Dodge, Deviation from the Inverse-Thickness Relation in Gas-Metal Permeation, A.I.Ch.E. Journal, Vol. 9, No. 1, pp. 93–98, January 1963.

10. D. Randall and O. N. Salmon, Diffusion Studies – I. The Permeability of Type 347 Stainless Steel to Hydrogen and to Tritium, USAEC Report KAPL-904, General Electric Company, March 17, 1953.

11. J. C. Crownover, Steam Jet Ejectors – Their Selection and Operation, Combustion, Vol. 17, No. 7, p. 24, January 1946.

12. E. L. Compere, B. Fleischer, W. R. Huntley, R. E. MacPherson, H. W. Savage, and A. Taboada, SNAP-8 Corrosion Program Summary Report, USAEC Report ORNL-3898, Oak Ridge National Laboratory, December 1965.

13. E. G. Bohlmann and E. L. Compere, Method of Removing Hydrogen from Liquid Alkali Metals, U. S. Patent 3,243,280, March 29, 1966.

14. Edith Ford Sollers and J. L. Crenshaw, The Dissociation Pressures of Potassium Deuteride and Potassium Hydride, Journal of American Chemical Soeciety, Vol. 59, p. 2015, 1937.

15. Edith Ford Sollers and J. L. Crenshaw, The Dissociation Pressures of Sodium Deuteride and Sodium Hydride, Journal of American Chemical Society, Vol. 59, p. 2724, 1937.

16. A. P. Fraas and H. Postma, Preliminary Appraisal of the Hazards Problems of a Fusion Reactor Power Plant, USAEC Report ORNL-TM-2822, Oak Ridge National Laboratory.

17. M. C. Bloom, M. Krulfeld, W. A. Fraser, and P. N. Vlannes, Corrosion Studies in High Temperature Water by a Hydrogen Effusion Method, Vol. 13, pp. 297t–302t, Corrosion,National Association of Corrosion Engineers, May 1957.

18. I A. Rohrig, R. M. VanDuzer, Jr., and C. H. Fellows, High-Temperature-Steam Corrosion Studies at Detroit, Vol. 66, pp. 277–290, ASME Transactions, 1944.