[redacted]

ORNL MASTER COPY

OAK RIDGE NATIONAL LABORATORY

operated by

UNION CARBIDE CORPORATION

for the

U.S. ATOMIC ENERGY COMMISSION

ORNL-TM-3070

DATE ISSUED: SEP 23 1970

13

DRAFT

TECHNICAL PROGRESS REVIEW

ISOTOPES AND RADIATION TECHNOLOGY

VOLUME 8, NO. 3

NOTICE This document contains information of a preliminary nature and was prepared primarily for internal use at the Oak Ridge National Laboratory. It is subject to revision or correction and therefore does not represent a final report.

[redacted]

LEGAL NOTICE

This report was prepared as an account of Government sponsored work. Neither the United States, nor the Commission, nor any person acting on behalf of the Commission:

A. Makes any warranty or representation, expressed or implied, with respect to the accuracy, completeness, or usefulness of the information contained in this report, or that the use of any information, apparatus, method, or process disclosed in this report may not infringe privately owned rights; or

B. Assumes any liabilities with respect to the use of, or for damages resulting from the use of any information, apparatus, method, or process disclosed in this report.

As used in the above, "person acting on behalf of the Commission" includes any employee or contractor of the Commission, or employee of such contractor, to the extent that such employee or contractor of the Commission, or employee of such contractor prepares, disseminates, or provides access to, any information pursuant to his employment or contract with the Commission, or his employment with such contractor.

[redacted]

ORNL-TM-3070

Contract No. W-7405-eng-26

DRAFT

TECHNICAL PROGRESS REVIEW
ISOTOPES AND RADIATION TECHNOLOGY
VOLUME 8, NO. 3

EDITORS:

P. S. Baker, Robert H. Lafferty, Jr., Martha Gerrard,
R. E. Greene, F. E. McKinney, Helen Raaen

ADVISER:

A. F. Rupp

SEPTEMBER 1970

Prepared for U.S. Atomic Energy Commission
by
Isotopes Information Center
OAK RIDGE NATIONAL LABORATORY
Oak Ridge, Tennessee
operated by
UNION CARBIDE CORPORATION
for the
U.S. ATOMIC ENERGY COMMISSION

[redacted]

[redacted]

		Page
I.	ISOTOPE PRODUCTION AND DEVELOPMENT	1
	FISSION PRODUCT XENON AND KRYPTON---AN OPPORTUNITY FOR LARGE-SCALE UTILIZATION (C. A. Rohrmann)	1
	Introduction	2
	Discussion	7
	Cost, Value, and Price	16
	References	19
	STRONTIUM-90 HEAT SOURCES (Roberta Shor, R. H. Lafferty, Jr., and P. S. Baker)	20
	Introduction	20
	Selection of ^{90}Sr as Heat Source	22
	Operation of Radioisotope-Powered Electrical Generators	27
	Separation Processes	28
	Preparation of Strontium Titanate	37
	Fabrication of Fuels	45
	Source Encapsulation and Testing	55
	Examination of Used Sources	63
	References	74
II.	ISOTOPE TECHNOLOGY DEVELOPMENT	80
	FLOW MEASUREMENTS WITH RADIOISOTOPES (R. H. Lafferty, Jr.)	80
	Survey of Flow Measurement Techniques	82
	Radioactive Tracer Measurements	92
	Accuracy and Precision	98
	Choice of Radioactive Tracer	102
	Injection of Tracer	108
	Gas Flow Measurements by Induced Ionization	123
	References	130
	THE APPLICATION OF NUCLEAR TECHNIQUES TO THE RECOVERY OF FADED PHOTOGRAPHS (R. M. Chatters and Camille Jacobs)	138
	Long Exposure Method	140
	References	147
	LABELING OF COPPER WIRE WITH ^{110m}Ag FOR SUBSEQUENT IDENTIFICATION (L. C. Bate and F. F. Dyer)	149
	Introduction	149
	Procedure	150
	Results	151
	Safety	153

[redacted]

[redacted]

		Page
	RADIOISOTOPIC X-RAY GAGE FOR DETERMINING PARTICLE-SIZE DISTRIBUTION	154
	^{13}C HELPS REVEAL CARBOHYDRATE STRUCTURE (Brief)	156
	A SIMPLE NEUTRON RADIOGRAPHY SET (Brief)	159
	THE CARBON-14 DATING OF IRON (Brief)	160
	RADIOGRAPHY USING PHOTO-NUCLEAR REACTION (Brief)	162
III.	PROCESS RADIATION DEVELOPMENT	163
	AEC PARTICIPATION IN THE DEVELOPMENT OF WOOD-PLASTIC COMPOSITES (R. E. Greene)	163
	Introduction	163
	Industrial Evaluation of Radiation-Processed WPC	167
	Process Problems	178
	Recommendations and Conclusions from Evaluations	183
	Final Contracts	185
	References	191
IV.	ISOTOPIC HEAT AND POWER DEVELOPMENT	193
	ORNL ISOTOPE KILOWATT PROGRAM (A. P. Fraas)	193
	Organic Rankine-cycle System	194
	Steam Rankine-cycle System	197
	Thermoelectric System	197
	References	201
V.	APPLICATIONS IN LIFE SCIENCES	203
	DUAL-RADIOISOTOPIC METHOD FOR DIAGNOSIS OF PULMONARY EMBOLISM	203
	RADIOISOTOPES AND RICE	205
	FROSTBITE EVALUATION WITH ^{131}I-RISA	207
	MOLECULAR RADIATION BIOLOGY (Book review)	209
	RADIATION SENSITIVITY OF TOXINS AND ANIMAL POISONS (Book review)	210
	MEDICAL RADIONUCLIDES: RADIATION DOSE AND EFFECTS (Book review)	211
	NEUTRONS FROM ^{2}H AND ^{3}H MAY FIGHT CANCER (Brief)	212
VI.	SAFETY	213
	SHIPPING CASK EVALUATION (R. D. Seagren)	213
	Regulatory Requirements	215
	Developments	218
	Design	220
	Fabrication	224
	Testing	225
	Approval	225
	References	226

[redacted]

[redacted]

Page

VII. ISOTOPES AROUND THE WORLD..... 227

DEVELOPMENTS ABROAD ON RADIOISOTOPE-POWERED CARDIAC PACEMAKERS (Martha Gerrard..... 227

France..... 227

United Kingdom..... 229

Australia..... 230

Safety..... 230

References..... 231

ISOTOPE GROUP OF SWEDEN CELEBRATES 10 YEARS OF OPERATION..... 232

Reference..... 233

VIII. MISCELLANEOUS..... 234

AVAILABILITY OF ISOTOPES AND SERVICES..... 234

ORNL Enriched Stable Isotope Inventory..... 234

Isotopic Separations..... 234

GE Announces Availability of ^{99}Mo..... 235

New Isotope Shipping Container..... 235

Lockheed to Close Nuclear Lab..... 235

Cornell Course in Radiation Techniques in Animal Sciences..... 236

Directory of High-energy Radiotherapy Centres, 1970 ed., IAEA..... 236

AEC ACTIVITIES..... 237

AEC Lab Develops Nuclear Probe to Spot Minerals on Ocean Floor..... 237

^{252}Cf Information Center..... 238

First Space Atomic Battery to Begin Tenth Year of Operation..... 238

AEC Exhibits Continue..... 239

"Your Stake in the Atom" Exhibit..... 239

AEC Revises Inspection and Maintenance for Radiography Equipment... 240

AEC Advisory Committee..... 240

GENERAL..... 241

Food Irradiation in Canada..... 241

^{60}Co Sewage Treatment Plant Installed..... 243

Amersham Receives Queen's Award..... 243

New Technique for Nondestructive Determination of Protein Quality.. 244

[redacted]

FISSION PRODUCT XENON AND KRYPTON--- AN OPPORTUNITY FOR LARGE-SCALE UTILIZATION* (2)

C. A. Rohrmann**

Supplementary Keywords: fission-product, stable; reactor by-product recovery; industry; industry, nuclear-energy; industry, electric; medicine; economics; isotope abundance; production, radioisotope; ionization of gas; pollution; atmosphere; review, technical; comparison; safety; hydrogen-3; krypton-85.

Abstract. In the near future, xenon, as a fission-product from nuclear fuel processing, could be made potentially available in great quantities and low costs as compared to today's recovery from conventional liquid-air-processing sources. One year after discharge from a reactor, the fission-product xenon contains only insignificant amounts of activity from short-lived xenon radioisotopes. Residual activity will relate almost totally to the effectiveness of the krypton separation to remove the highly radioactive krypton-85. Present technology appears capable of ensuring such removal. Comparisons of future fission-product and atmospheric xenon resources and cost are made. Physical properties of xenon and krypton are discussed, and if the price becomes competitive, xenon may replace krypton in some applications, for example, as an inert gas in incandescent lamps. Another attractive major potential use of xenon is as an agent in surgery where it has been found to be unique for light as well as deep anesthesia.

---

*This paper is based on work performed under U. S. Atomic Energy Commission Contract No. AT(45-1)-1830 and is a slightly edited version of BNWL SA-2122 Rev. 1.

**Division Staff Engineer, Chemistry & Metallurgy Division, Pacific Northwest Laboratory (Battelle-Northwest) Battelle Memorial Institute, Richland, Washington, a Prime Contractor for the USAEC.

(Introduction)

Until recently interest and activity on materials recoverable as by-products of atomic energy operations or producible via nuclear reactions has been almost exclusively confined to the radioisotopes. The utility of these exciting materials in medical research and technology, in life science studies generally, and in industrial technology has indeed brought great benefits. In addition, the space-power potentialities of massive quantities of the longer lived radioisotopes which can be made available are also spectacular. The use of intense radiation sources in food processing for preservation and disinfestation is an exciting application which has also received intense research and development study. However, more than 20 years after most of these applications were first explored, none of them hold much promise for consuming the large quantities of even the most attractive radioisotopes which are today already in great supply and which in the future will continue to accumulate at a rapidly accelerating rate in the residues from nuclear fuel reprocessing.(1) As a result of this developing situation, which has been emphasized by the long-range Battelle-Northwest studies of the development of the nuclear power industry, more consideration has been given by Battelle-Northwest since about 1962(2) to the practical applications of the few, essentially stable, presently rare and very costly, useful elements that are produced in fairly high yield from the fission process. Today probably no more than three of these elements can be considered---rhodium, palladium, and xenon. All of these are readily available articles of commerce; and as such, they have many important common uses in man's everyday living: attractive platings on inexpensive jewelry, dental alloys, household appliance control equipment, telephone switch gear, photo flash tubes, and ultraviolet and other intense light sources. In addition there are extremely important large scale industrial uses for each of these. Xenon is used in multi-kilowatt intense light sources(3) and special high-

power electronic equipment. Both rhodium and palladium have very essential and widespread applications for catalysts and alloys and in communication switch gear. There would very likely be an extension of the applications for these very useful materials if greater availability and lower costs could be assured. This conclusion is probably more appropriate in the case of xenon than for the others. Fission-product rhodium and palladium were reviewed earlier.[4] It is the intent of this present review to cover the situation involving fission-product xenon. It should be emphasized that the applicability of these fission derived, essentially stable, and valuable elements is not a new disclosure, since references can be cited on the subject dating back many years.[5] Unfortunately some of the most significant references are still classified and hence are not identified here. However, the recent rather sudden and massive advances in the civilian nuclear power development in the U.S. and the accompanying plans for early construction of fuel processing plants of capacities far greater than were proposed even as late as two years ago, make review of the magnitude and application of these by-products timely, appropriate, and unique.

For many years argon has been used to fill (at about atmospheric pressure at operating temperature) all tungsten filament light bulbs because it depresses the evaporation of the tungsten filament and thus promotes the attainment of higher filament temperature, brighter light, and prolonged filament life. Also for many years krypton has been looked upon as a desirable replacement for argon in special long-lived light bulbs. The higher atomic weight of krypton makes it even more effective than argon in depressing the evaporation of tungsten. Its lower thermal conductivity also contributes to

According to Fastovskii et al.[6] this use alone consumed 400 million liters of argon in the U.S. in 1958.

smaller bulb size, brighter light, and longer life for the filament. In Europe, krypton has been used in this way for many years. Only recently, with the shift toward the use of pure oxygen instead of air for operation of basic open-hearth steel furnaces in the U.S., has sufficient liquid air capacity been available to ensure at fairly reasonable cost the volumes of krypton [recoverable from the liquid oxygen fraction in the large (1000 tons of O_2 per day) liquid air plants] required by a reasonably large-scale lamp production operation. In early summer 1968, two companies announced their intention of marketing 60- and 100-watt, long lived, krypton-filled bulbs.[7] Such bulbs were indeed available later in the year. The price range of about $0.70 to $1.30 reflects the specialty nature of these bulbs rather than the actual cost of the gas used. This application alone could probably consume all of the krypton that could be recovered from the very large-scale oxygen industry. The small quantity of xenon, also recoverable along with krypton from these liquid-air-processing operations, would still be insufficient (and thus probably too costly) to provide the practical amounts for such large-scale applications. However, xenon would be significantly superior to krypton in this application because of its much higher atomic weight and lower thermal conductivity. It is quite certain from a review of xenon applications that the obvious extreme rarity and high cost of this element has clearly inhibited consideration of it even in some applications where it may be superior.

Xenon is produced in highest yield of all the forty-some elements produced by the fission of uranium and plutonium. The application of this fission-derived xenon, which will be available in less than ten years in fairly large amounts (Fig. 1) from the large nuclear fuel reprocessing plants, is a distinct and encouraging possibility that has initiated interest in this review.

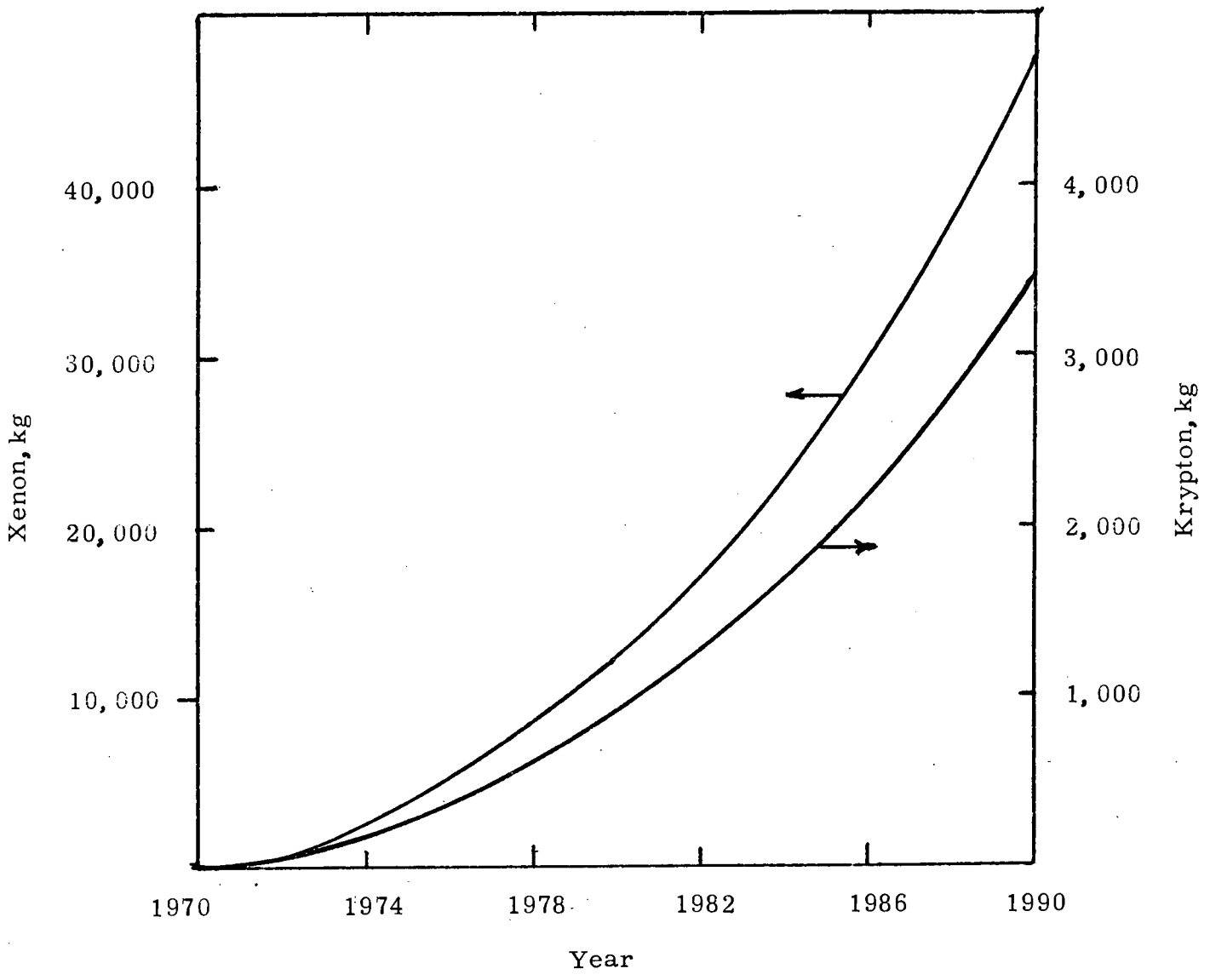

Fig. 1. Projected annual recovery of fission-product xenon and krypton from United States nuclear-power fuel-processing plants (basis Ref. 1).

However, it should be recognized that in view of the magnitude of the use of argon in the incandescent lamp industry [about 785 tons in 1958 (Ref.6)] the use of all available atmospheric krypton and xenon plus all of the fission-product xenon from power reactor fuel processing could not appreciably impair the existing and future use of argon in this same application. Under any conceivable development, Kr and Xe will always be rather rare and fairly costly materials. Although the useful properties of xenon compared with other inert gases have been well known for many years, the most surprising application for which xenon appears to be unique among the inert gases and specific to man is in anesthesia. This property has been known for about twenty years. But here again the rarity and very high price preclude its use for this large-scale, beneficial application except in experimental or theoretical studies. Cullen and Gross[8] in 1951 are credited with the first use of xenon as an anesthetic for surgical procedures on man. The gas mixture used in these examples comprised 18 to 22% oxygen with the balance being high-purity xenon.

The anesthetic gas used here was essentially a synthetic air in which all of the nitrogen had been replaced by xenon. In a review, Featherstone and Muehlbaecher[9] reported the following concerning observations on the use of xenon as an anesthetic for man: In one case involving light anesthesia there was no evidence of reaction to pain. Full recovery from the anesthesia was noted in five minutes. In another case a satisfactory degree of anesthesia was achieved within a few moments. Excitement during administration was absent and recovery was obtained within two or three minutes following interruption of xenon. Man was the only species which could be anesthetized with the xenon gas mixture at atmospheric pressure. Other animals (monkeys and dogs) can be anesthetized with xenon mixtures but only at elevated pressure (2 to 3 atmospheres). Xenon anesthesia is characterized by the unusual brevity of the induction and emergence periods. Equivalent mixtures using krypton were ineffective when administered to human subjects.

Discussion (3)

Xenon Resources and Properties (4)

Atmospheric (5)

Xenon is one of the six so-called inert gases† (which also include helium, neon, argon, krypton, and radon) that occur in the atmosphere. Only radon is naturally radioactive and has such a short half-life (3.8 days for its longest lived isotope) that it can be neglected as a constituent recoverable from the atmosphere. Of the others, only helium occurs in practical concentration in nonatmospheric sources. Certain fuel-type natural gases are by far the most important source of this element from which it is routinely extracted commercially in very large quantities. Fastovskii et al.[3] list the occurrence and properties of these rare gases:

COMPOSITION OF DRY AIR

	Vol. %	Wt. %	Relative Abundance by Vol. Xe = 1	Relative Abundance by Wt. Xe = 1
CO_2*	0.033	0.050	3840.0	1282
Helium	5.239×10^{-4}	0.724×10^{-4}	61.00	1.86
Neon	1.818×10^{-3}	1.267×10^{-3}	211.5	32.5
Argon	0.934	1.288	108700.	33000
Krypton	1.14×10^{-4}	3.29×10^{-4}	13.25	8.44
Xenon	0.86×10^{-5}	0.39×10^{-4}	1.0	1.0

* Although CO_2 is not a rare gas it is included for comparison since it is a minor constituent in the atmosphere where it is far less prevalent than is argon.

† Also called rare or noble gases.

SOME PROPERTIES OF INERT GASES

	At. Wt.	Density STP, g/liter	Boiling Point of liquid, °K	Heat of vaporization at b.p., cal/g mole	Heat capacity, cal/g/°C, one atm, 20°C	Thermal conductivity, cal/cm/°C/sec, one atm, 50°C
Neon	20.2	0.9003	27.07	414	0.248	15 (est.)
Argon	39.9	1.7839	87.27	1558	0.125	4.62
Krypton	83.7	3.745	119.80	2258	0.0594	2.41
Xenon	131.3	5.897	165.05	3020	0.0378	1.47

ISOTOPIC COMPOSITION

Xenon			Krypton		
Isotope	Natural, at. %[10]	Fission Product approx. at. %[11]	Isotope	Natural, at. %[10]	Fission Product approx. at. %[11]
124	0.096	—	78	0.35	—
126	0.090	—	80	2.27	—
128	1.92		82	11.56	0.2
129	26.44	0.15	83	11.55	11.
130	4.08		84	56.90	31.
131	21.18	8	85	—	6.
132	26.89	22	86	17.37	52
134	10.44	29			
136	8.87	41			

On the basis of the above data, the average atomic weight of fission-product xenon will be about 134.3 or more (vs. 131.3 for that from the natural xenon). Likewise, the average atomic weight for fission-product krypton will be about 85 (vs. 83.8 for natural krypton).

Inspection of the data on the concentration of xenon and krypton in air gives a strong impression of the true rarity of these gases. Obviously, recovery of even reasonable amounts at low cost requires the processing of enormous tonnages of air. Only within the last few years have such capabilities come into existence through the need for relatively pure oxygen by the open-hearth steel industry. Single plants processing in excess of 5000 tons of liquid air per day are now in operation.[12] The switch from air to oxygen in this segment of the steel industry is continuing. Although these plants generally do not yield separated xenon and krypton, the opportunity now exists to provide the rather modest additional facilities by which the xenon and krypton could be recovered in fairly high yields (85%) from intermediate concentrates which can be readily separated. Large volume sales of krypton are now being made at about $0.50 per liter.[13] As demand and production increase, lower prices are anticipated. A similar though less impressive situation should also come about for xenon.

One thousand-liter orders for xenon (STP) can be filled today at about $10 per liter.[14] The small scale of present consumption is understood to be rather insensitive to price. With increased krypton production and consumption, the accompanying xenon (about one thirteenth as much on a volume basis) will seek its own market-price level, probably appreciably below the $10 figure; however, it is highly unlikely ever to be less than the price of krypton from this source.

Fission Product (5)

Fission events from either ^{235}U or ^{239}Pu produce a total of some 40 elements including many

isotopes of some elements (about 18 for xenon). The radioactivities of these various isotopes range from none to highly radioactive. Some of the radioactive species have half-lives so long and emission energies so weak that they can be regarded as essentially stable materials---e.g., ^{129}I has a half-life of 1.6×10^7 years and ^{147}Sm, ^{148}Sm, and ^{149}Sm have half-lives in the range of 10^{11} to 10^{14} years (the last isotope having only one-millionth of the activity of ^{235}U). On the other hand, there are many radioisotopes of intense activity, but their half-lives are so short that they can be disregarded since their concentrations would be insignificant under practical conditions of large-scale recovery. For low enrich-

ment uranium or plutonium fuels exposed to about 25,000 Mwd/t (megawatt days per metric ton of fuel) fission yield calculations indicate production of nearly 4 kg of xenon per metric ton of fuel. All radioactive fission-product xenon isotopes have half-lives so short (12 days maximum) that no normally detectable xenon radioactivity will exist within one year after the fuel is discharged from the reactor. Thus, fission-product xenon can be regarded as existing entirely as stable xenon isotopes. Any radioactivity present will depend on the effectiveness of the process by which xenon is separated from contaminating material, specifically, fission-product krypton, (containing about 6% ^{85}Kr which has a half-life of 10.76 years). The krypton fission product including the intensely radioactive ^{85}Kr, will exist in the same fuel at about one quarter of a kilogram per ton. Although other gases result from fission, their concentrations will be extremely minor---the gases evolved from fuel dissolution will be predominantly xenon and krypton. Depending on the dissolution process used and the effectiveness of minimizing extraneous gas (air) inleakage, the vent gases could conceivably be a nearly pure mixture---extremely rich (compared to liquid air process conditions) compositions of xenon and krypton.

At this point, another comparison is worth reviewing: xenon-krypton production from an oxygen plant and from a nuclear fuel processing plant.

	1000 tons/day* Oxygen Plant (@ 85% Recovery)	5 tons/day** Fuel Processing Plant (@95% Recovery
Krypton, liters (STP)	3400	326
Xenon, liters (STP)	255	3210
Vol.% krypton in mixed gas (Kr+Xe)	93%	9%
Vol.% xenon in mixed gas (Kr+Xe)	7%	91%

* Short tons

** Metric tons @ 25,000 Mwd/t

The above comparison shows that the typical fuel processing plant, to be in operation in about five years, has a xenon capability on a volume basis about twelve and a half times as great as that from today's largest oxygen plant. Another view is that, on a volume basis, the production capability for xenon from a typical fuel processing plant is essentially the same as the krypton production capability from today's largest oxygen plant.

Another impressive comparison may be made:

A 5000 tons per day air separation plant (1000 tons of oxygen per day) will, at 300 operating days per year, require four years to process a cubic mile of air to recover 360 cubic meters of xenon. A five tons per day fuel processing plant will yield the same amount of xenon in less than six months (113 operating days).

It is concluded from these examples that fission-product xenon will indeed become available via reactor fuel processing operations in quantities sufficient to assure consideration as a marketable product. Not only will fuel processing provide large

quantities at an ever increasing annual rate as nuclear power production assumes a larger fraction of the world's power needs, but also this xenon could be available from the primary source in relatively very high concentrations--conceivably several percent in the primary waste gas.

Another facet of this fission product xenon resource relates to the problem of air pollution. This problem is not, of course, concerned with any pollution aspects of xenon itself but specifically from the companion rare gas, radioactive ^{85}Kr. [It is emphasized that the author professes complete neutrality with regard to whether or not the release of fission-product krypton with its 6% fraction of ^{85}Kr represents a significant air pollutant and therefore whether or not fuel processing plants should be required to trap and contain it.] In view of its inertness, ^{85}Kr should have no exposure relationship to any specific organ. Its hazard, which incidentally on a maximum permissible concentration basis is listed among the least hazardous of all radioisotopes, would relate entirely to environmental exposure for a body completely surrounded or immersed in an atmosphere containing the ^{85}Kr. With the assumption of complete, rapid, and uniform mixing in the earth's total atmosphere, calculations can show that the hazard of fission product krypton does not appear to be significant for the foreseeable future. Nevertheless, on a curie basis, ^{85}Kr will contribute far more activity than any other isotope routinely released to the environment

from the fuel processing plant. A five metric tons per day fuel processing plant consuming feed irradiated to 25,000 Mwd/t could be releasing ^{85}Kr activity amounting to about 35,000 curies per day. In the license applications made by the General Electric Company and the Allied Chemical Corporation for their proposed fuel processing plants, no facilities were identified which would be used to trap the krypton. Similarly at this time no such

processes are known to be in operation or planned for any of the other private fuel processing plants (Nuclear Fuel Services, Inc., National Lead Company, or Atlantic Richfield Company. In other words, at this time there are no provisions for fission-product radio-krypton disposal from nuclear fuel processing plants other than by venting to the atmosphere.

If, however, for pollution abatement reasons there were to develop a requirement for ^{85}Kr trapping, the impact on fission product xenon availability and economics could be extreme and highly favorable. (Again the statement here should not be construed as favoring such action. It is merely made to illustrate what the influence could be on the future of fission-product xenon.) If ^{85}Kr had to be trapped and perpetually stored, the small volumes of krypton compared with the volumes of xenon would for economic reasons assure that these two gases would be separated to save on ^{85}Kr storage costs. (The mixed inert fission gas would be only about 9% krypton.) If these conditions were to prevail, xenon costs could relate only to the expense involved in diverting it as highly concentrated gas and for refining it to remove the residual ^{85}Kr to tolerable levels. Present rare gas processing techniques can assure separations down to the few parts per million level (one)—normally 20 ppm, with 5 ppm achievable; however, techniques are available which could ensure far lower levels. For fission-product xenon which has been out of the reactor for one year, any activity associated with remaining short lived xenon isotopes is expected to be less than 10^{-10} curies per liter of gas (STP). Such activity is not regarded as significant for any large-scale consumer applications. Furthermore, this activity would diminish by one half every twelve days. The residual radiation is thus dependent on the effectiveness of ^{85}Kr removal. Based on the assumption that fission-product krypton contains 6% ^{85}Kr and a xenon product contains 5 ppm of total krypton contamination, the activity of the xenon on a volume basis will be about 450 μCi per liter or

45 μCi per 100 ml, which may be the maximum volume of the consumer product in the incandescent lamp bulb . This quantity of activity in this product does not appear to be sufficient for its rejection, but further study with respect to a permissible dose rate and the feasibility of further purification should be considered. At the present time, means may be at hand to reduce ^{85}Kr contamination to possibly one percent of the levels indicated above or about 1 to 10 μCi per liter.

Uses of Xenon and Krypton (4)

A "Linde" brochure[15] on the uses of xenon and krypton indicates that krypton is used to fill tiny incandescent lamps where high efficiency is demanded. The heavier weight of krypton gas decreases filament evaporation and heat losses enabling higher temperature operation of the lamps. The introduction of krypton gas as a filling agent in fluorescent lamps has increased their efficiency by 10%. Krypton is also used in high-intensity, airport landing-approach lights.

According to the brochure, xenon is used in thyratron tubes, where its temperature insensitivity is essential. The excellent spectral characteristics of the xenon arc are utilized in high-speed photographic lamps. The anesthetic properties of xenon are also mentioned. Its inertness may provide safety features unobtainable with some other types of anesthetic gases.

None of the uses described above appears to contemplate large-scale applications and thus no consideration appears to be advanced for utilization of the massive quantities of relatively low cost rare gases obtainable from either the enormous oxygen production plants or from the modest sized fuel processing plants which are certain to be operating in the near future. The specialty incandescent lamp industry could probably consume all of the krypton

obtained from the large-scale oxygen industry. The relatively small quantity of xenon (in addition to its price) obtained concurrently could probably not be justified for consideration in this application. The xenon recoverable from nuclear fuel processing plants could, however, very likely be considered competitive with krypton for this same application. Xenon's cost should be comparable and its availability should then be significant. However the use of xenon as an anesthetic gas may be an even more logical use. Such a beneficial application may also support a substantially higher price, especially if it can be used in closed or recycle type systems which, we understand, requires only about eight liters of gas for a single operation. The selling prices of such gases should, of course, determine the application and the magnitude of the use. Thus, for fission-product xenon, there are conceivable conditions under which a very-low-cost product could be assured. From this source the selling price goal should be in the range of $0.50 to $1.00 per liter (STP) of purified gas to be competitive with krypton; however, for anesthetic uses the price may be in the range of $1.50 to $3.50 per liter.

Although comments to this point on fission-product krypton have related exclusively to its removal and permanent confinement to avoid discharge of activity to the environment, ^{85}Kr must be regarded as a unique material. Special applications for it have been considered and are still appropriate. The proposed applications relate to the use of its beta activity in lighting in assisting the starting of fluorescent lamps and as the activator in special phosphorescent lamps. Krypton-85 has also been suggested as a heat source but in this application isotopic enrichment from the existing 6% to about 50% for ^{85}Kr is almost essential. A low cost enrichment process does not appear to be achievable at present. Therefore, the prospects for such an application do not appear very hopeful. However, consideration of the use of the intense beta

activity of this unique gas should be receiving more intensive study particularly in view of its future potentially low cost.

Cost, Value, and Price (3)

The following discussion on cost, value, and price is relevant to the possible exploitation of fission-product xenon and krypton. Although, as previously mentioned, the price of xenon is today reported to be about $10 per liter (STP) in large (1000 liters) quantities, and $20 to $35 per liter in smaller quantities, there are few private needs that can consume much of this gas at these prices. The few special uses of xenon, such as in high intensity lamps and electronic tubes, could probably tolerate even a higher price. However, such uses cannot possibly consume all of the xenon which could be obtained just from the many large liquid air plants now in operation. It is also conceivable that fission product xenon could be recovered very profitably at $10 per liter today. However, as noted above, few markets exist for xenon of such value or price. In 1980, at the $10 per liter price, about $20 million worth of fission-product xenon will be released from spent fuel reprocessed for the nuclear power industry. It is inconceivable that the small specialty uses for xenon could expand to the level that would require either that quantity or investment in xenon. A much more realistic view of the market possibilities must be taken. For example, at the present time only two uses can be foreseen which could consume all fission product xenon---in long-lived tungsten filament incandescent lamps and in human anesthesia. For incandescent lamps xenon would have to compete with krypton. In this use xenon would be somewhat superior and could command a higher price, but not much higher --probably much less than double the price of krypton, since it is better but only can be expected to be fractionally better.

Apparently large-scale users are now obtaining krypton at slightly over $0.50/liter (STP). With continued expansion in large scale oxygen recovery and competition in the krypton marketing field, a lower price can be expected in the future with stabilization

at perhaps in the $0.25 to $0.50/liter range by 1980. Thus to compete in this large-scale application a price somewhat above the $0.25 to $0.50 range can be expected to be acceptable. All xenon should then be marketable at a price in the range of perhaps $0.50 to $1.00, but definitely less than $1 per liter. At this price level, the total fuel processing industry might anticipate the revenue from xenon to lie between $0.5 and $2 million in 1980. Under the unique condition whereby krypton disposal may have to be restricted, xenon pricing in the above range may be definitely attractive and significant but not a major source of revenue. In the application of xenon in anesthesia, the unique and advantageous properties of this gas may minimize the competition with conventional anesthetics. For this use then xenon may justify a higher price, probably in the range of $1.50 to $3.50 per liter and these prices would thus be in the range of about one-tenth that of today's prices.

If one can conceive of a market for fission-product krypton, an even more drastic scaledown of price or value must be accepted. If it is assumed that fission-product krypton with its 6% ^{85}Kr is indeed a useful material and that it can be used, for example, in improved fluorescent lighting for general and uncontrolled use in homes, and with the assumption that only a small fraction of a curie of activity from this isotope is needed per device, then it is conceivable that such a use could consume all that could be obtained.

The present price for fission product krypton is $22/Ci.[16] At this price the value of the total amount available from nuclear fuel reprocessing plants in the U.S. in 1980 would be about $500 million! It is, of course, inconceivable that uses will be developed in the next twelve years that could justify such investments in this radioisotope. Large orders of tritium (^{3}H) can be had for $1.00/Ci today.[16] Tritium would appear to be a more versatile radioisotope with potentially more uses than ^{85}Kr. The latter isotope should then be priced lower--- probably much lower. Such prices could be of interest

in fuel reprocessing only if trapping and indefinite retention of ^{85}Kr were already a requirement for antipollution reasons. If the price were as low as $0.08 per curie, the revenue from ^{85}Kr in 1980 would be about the same as for xenon at the upper level of its lower price projection. The concept of distributing the total production of ^{85}Kr in the form of fluorescent lamps, each containing a few millicuries of activity, may not be as agonizing a solution to the disposal problem as first thoughts may seem to indicate. Although radioactivity is present, it is never directly in contact with any part of the human body. Furthermore, with the apparent ventilation present in modern homes, offices, and industrial facilities, the occasional rupture of a bulb containing a few millicuries of ^{85}Kr doesn't appear to present a critical hazard. A statistical view of this situation may indicate that this is an acceptable method of ^{85}Kr disposal.

However, in either case of fission-product (xenon or krypton) utilization, the low projected prices must assume that facilities are required for krypton trapping and retention as a pollution-control effort. Under such conditions the revenues which may be realized are attractive but definitely modest.

References (3)

1. D. E. Deonigi, R. W. McKee, and D. R. Haffner, Isotope Production and Availability from Power Reactors, USAEC Report BNWL-716, Pacific Northwest Laboratory, July 1968.

2. M. M. Hendrickson and J. K. Green (eds.), Quarterly Progress Report, Research and Development Programs, Executed for the Division of Reactor Development, October, November, December, 1962, USAEC Report HW-26559, Hanford Atomic Products Operation, January 1963.

3. G. S. Hunter, Airborne Illumination Development Spurred by Viet Needs, Aviation Week and Space Technol. 89(17): 92-4, 99, 102-03, Oct. 21, 1968.

4. C. A. Rohrmann, Large-Scale Exploitation of Fission-Product Rhodium and Palladium, Isotop. Radiat. Technol. 6(4): 352-8 (Summer 1969) (Revision of Battelle Northwest Report BNWL-SA-2040).

5. E. Glueckauf, The Long-Term Aspect of Fission Product Disposal, Atomics and Atomic Technology 6(9): 270-6, 281 (Sept. 1955). See p. 275, Table III.

6. V. G. Fastovskii, A. E. Rovinskii, and Yu. V. Petrovskii, Inert Gases. Translated from the Russian by J. Schmorak, Jerusalem, Israel Program for Scientific Translations, 1967. USAEC Report AEC-tr-6725.

7. Krypton May Battle Argon for the Incandescent Lamp Market, Chem. Week 102(25): 78 (June 22, 1968).

8. S. C. Cullen and E. G. Gross, The Anesthetic Properties of Xenon in Animals and Human Beings, with Additional Observations on Krypton, Science 113: 580-2 (May 18, 1951).

9. R. M. Featherstone and C. A. Muehlbaecher, The Current Role of Inert Gases in the Search for Anesthesia Mechanisms, Pharmacol. Rev. 15: 97-121 (1963).

10. Chart of the Nuclides, Ninth Edition---Revised to July 1966, Knolls Atomic Power Laboratory, General Electric Company, 1966.

11. W. A. Bezella, Analysis of the Fission Gases Released Within Spent Yankee Fuel Rods, USAEC Report WCAP-6087, Westinghouse Electric Corp., February 1968.

12. New Plants and Facilities, Chemical Engineering 74 April 10, 1967: 188-90 and October 9, 1967: 223-4.

13. Materials Applications, Industrial Research, Sept. 1968: 49-50.

15. Linde Rare Gases, Brochure, Linde Air Products Company, Union Carbide Corporation, 270 Park Avenue, New York, N. Y. 10017.

16. Radioisotopes, Stable Isotopes, Research Materials, catalog available free from Isotopes Sales, Building 3037, Isotopes Development Center, Oak Ridge National Laboratory, P. O. Box X, Oak Ridge, Tenn. 37830.

14.* AIRCO Rare and Specialty Gases, catalog of Air Reduction Co., Inc., 150 E. 42nd St., New York, N. Y. 10017, 1968, p. 18.

STRONTIUM-90 HEAT SOURCES (2)

Roberta Shor, R. H. Lafferty, Jr., and P. S. Baker

Supplementary Keywords: energy source; conversion, electric; thermoelectric system; production, radioisotope; reactor by-product recovery; source preparation; production, separation; data compilation; industry; industry, radioisotope; safety, container; leak detection; review, historical; review, technical; economics; bibliography; krypton-85.

Abstract. Current methods of purification of fission product ^{90}Sr and production of ^{90}Sr fuel forms are described. SNAP-7A fuel is examined after 5-1/2 years operation. Excerpts were made from a full-length report on ^{90}Sr heat source production, source testing, and source properties.

(Introduction)

Compact electrical generators powered by heat from radioisotopes have been under development in the United States since the early 1950's for space, marine, and terrestrial uses. Essentially all the generators developed for marine and terrestrial uses have been powered by ^{90}Sr.[1,2] The preparation of ^{90}Sr fuel forms, beginning with spent reactor fuel wastes and ending with the encapsulated fuel, is described in a comprehensive report to be published soon by the AEC Division of Isotopes Development, Division of Technical Information, and the Isotopes Information Center, Oak Ridge National Laboratory. The highlights of the report are presented here. The report summarizes the developmental work done by Oak Ridge National Laboratory (ORNL), Hanford Atomic Products Operations (Hanford*), and Martin Company, Nuclear Division, which led to the production of

*The Hanford Atomic Products Operation of the General Electric Co. was divided in 1965 and 1966 among a number of contractors. For simplicity and convenience in this report, all the work done at Hanford is referred to as Hanford work. No effort has been made to identify the particular contractor responsible for the later work. However, the reports cited in the references are so identified.

^{90}Sr heat sources for use in the generators.

The processes discussed include:

1. separation of radiochemically pure ^{90}Sr from the reactor wastes in a chemical form suitable for further processing,
2. conversion of the separated ^{90}Sr to a chemical form that is suitable for a heat source,
3. fabrication of the separated chemical compound into pellets having a suitable density and purity for a heat source, and
4. encapsulation of the pellets in a metal container that is resistant to corrosion by the source compound and by the environment in which it is to be used.

Generator design is excluded, except as it relates to the properties of the fuel forms required in the generators.

Selection of ^{90}Sr as Heat Source (3)

Several qualities make ^{90}Sr attractive as a fuel for heat sources:

1. It is available in large amounts in the wastes resulting from the processing of spent reactor fuels.
2. Procedures for recovering ^{90}Sr of high radiochemical purity with low inert-contaminant levels have been developed.
3. Its half-life is 28.5 years.
4. Fuel forms can be made from fission product wastes with adequate power density for applications in power-generator heat sources. Pure ^{90}Sr has a specific activity of 139 Ci/g and a specific power of 0.0067 W/Ci; however, fission-product (FP) strontium contains only 55 at. % ^{90}Sr. Achievable power densities are limited by the age of the FP ^{90}Sr, the amounts of inert contaminants present, and the deviations of the fuel materials from theoretical physical density.

Several chemical forms of ^{90}Sr fuel were considered—$SrTiO_3$, SrF_2, SrO, Sr, and Sr_2TiO_4. The properties that outweighed all others in the selection process were the power density, thermal stability, and solubility—particularly in sea water. The compound offering the most desirable combination of properties was $SrTiO_3$, and it has been used in fabricating most of the ^{90}Sr heat sources to date.[3,4] $SrTiO_3$ is the least soluble in water and its power density is sufficient to meet generator design needs for present applications, being 0.7 to 0.9 W/cm^3, depending on the method of preparation. The only other compound that has been used as a heat source is SrO, although SrF_2 is being considered as a storage form. Its power density is ∿1.6 W/cm^3, but it is moderately soluble in water. Both compounds can be prepared by simple procedures adaptable to manipulator cell operations. Handling and storage problems are simpler for $SrTiO_3$ than for SrO, but decontamination is more difficult.

Modern generators employ semiconductor materials made into *n*- and *p*-type legs. The legs are thick cylinders bonded to hot and cold "shoes." The heat from the isotope source (^{90}Sr) flows into the hot shoe and moves up through each element to the cold shoe and into the cold reservoir. The difference in potential across the *p* and *n* elements is proportional to the difference in temperature between the hot and cold reservoirs. The maximum hot temperature and the efficiency of the generators depend on the material used for the thermoelements. The generators now in operation use lead telluride elements in an Ar-He atmosphere and operate at temperatures up to ∿530°C. The *p* and *n* elements are made from lead telluride having small differences in composition.[1] A 5% efficiency in converting heat to electrical energy is the highest achieved in the generators built in the SNAP-7 (Systems for Nuclear Auxiliary Power) program. The expected maximum efficiency for terrestial application is 10% if GeSi and PbTe thermoelements in a cascade arrangement operate at 750°C with 130°C cold junctions.[5]

In August 1961 the first ^{90}Sr-powered automatic weather station was placed on Axel-Heiberg Island in Canada, 700 miles from the North Pole. The unmanned station, designed to collect and relay data on temperature, wind velocity, and barometric pressure, was part of a joint project of the United States and Canadian weather bureaus. It operated successfully until August 1964 (Ref. 2).

The SNAP-7 series of six generators (Table 1) were designed after demonstration of the Weather Bureau station and were similar to it and to each other in most respects. The sources for these generators were fabricated[1] by ORNL and Martin from ∿1 MCi of ^{90}Sr that had been separated at Hanford in 1961.

Table 1. STATUS OF ^{90}Sr-POWERED THERMOELECTRIC GENERATORS (1970)[1,2,4,6,7,8]

Name	kCi	Power, W Thermal	Power, W Electric	Date installed	Buyer	Use	Place	Contractors	Comments
Sentry (Weather Bureau)	17.5	110	5	1961	Weather Bureau	Weather station	Axel-Heiberg Island	HAPO,* ORNL, Martin	Operated 3 yr; no ^{90}Sr failure
SNAP 7A	41	250	10	1962	U.S. Coast Guard	Buoy light	Curtis Bay, Md.	HAPO,* ORNL, Martin	Gradual power loss greater than design predicted; disassembled April 1969
SNAP 7B	220	1400	60	1964	U.S. Coast Guard	Lighthouse	Baltimore, Md.	HAPO,* Martin	Replaced 7F in 1965; still operating
SNAP 7C	41	250	10	1962	U.S. Navy	Weather station	Antarctic Mainland	HAPO,* ORNL, Martin	Dismantled Nov. 1967
SNAP 7D	225	1400	60	1964	U.S. Navy	Barge weather station	Gulf of Mexico	HAPO,* ORNL Martin	Still operating
SNAP 7E	30	180	7.5	1964	U.S. Navy	Sonic beacon	Undersea near Fla.	HAPO,* ORNL, Martin	Failure of pinger 1968
SNAP 7F	225	1400	60	1965	Phillips Petroleum and AEC	Buoy warning and control station	Gulf of Mexico	HAPO,* Martin	Shield failed; sea water ruined thermoelements
URIPS (P1-1002) (P1-1001A)	7	45	1	1966 1967	U.S. Navy	Deep sea	Port Hueneme, Calif.	HAPO,* ORNL, AGN	Still operating at stated power
NUMEC (2)	30	200	7	1966	Israel	Undersea or surface		HAPO,* ORNL, NUMEC	
U1-1001	7	45	1	1967	Jt.venture: AGN-BMI-Bendix	Geodetic bench mark	Pacific Ocean near Anacupa Island	HAPO,* ORNL, AGN	First license for deep-ocean non-recovery use
NUMEC 100 MA (2) milli TRACS	2.7		0.1	1967	U. S. Navy	Deep sea	Port Hueneme, Calif.	HAPO,* ORNL, NUMEC	
NUMEC TRACS-25A	118		20	1968	U. S. Navy	Tidal wave warning system	Bahamas	HAPO,* ORNL, NUMEC	

Table 1 (continued)

Name	kCi	Power, W Thermal	Power, W Electric	Date installed	Buyer	Use	Place	Contractors	Comments
RIPPLE III	4.6		0.7	1967	U.S. Navy (loan)	Undersea test	Port Hueneme, Calif.	HAPO,* ORNL, UKAERE	
RIPPLE IV	15	100	2			Submarine cable repeater		HAPO,* ORNL, UKAEA, and Submarine Cables Ltd.	
RIPPLE IX	30	200	4			Aircraft ground radio beacon		HAPO,* ORNL, UKAEA, and Submarine Cables Ltd.	
MW-3000A	20		2.5	1967	U.S. Navy	Deep sea		HAPO,* ORNL, Martin	
SNAP 21 (5 made)	40	200	10	69	U.S. Navy	Undersea	Offshore San Clemente Is., Calif.	HAPO,* ORNL, 3M	
LCG 25A	110	740	25	1966	U.S. Navy	Oceanographic instruments	Fairway Rock, Alaska	HAPO,* ORNL, Martin	
LCG 25B			25	1967	U.S. Navy		Port Hueneme, Calif.		
SNAP 23A	200	1200	60	1969*	U.S. Navy	Terrestrial		HAPO,* ORNL, Westinghouse	
Sentinal 25E (11,12,13)	106 each	700	25	Mar. 1969*	U.S. Navy	Oceanographic data stations		HAPO,* ORNL, Isotopes, Inc.	
Sentinal 25D (8,9,10)	106 each		25	June 1969*	U.S. Navy	Terrestrial and to 1000 ft undersea buoys		HAPO,* ORNL, Isotopes, Inc.	
LCG 25C1	110	740	25	1968	NASA	Interrogation, recording, and location system	Puerto Rico coast sub-surface buoy	HAPO,* ORNL, Martin	Failure in auxiliary equipment; reinstalled
P1-1003 -1004 -1005 -1006	8	53	1.2	1970	USN	Deep ocean	Port Hueneme, Calif.	HAPO,* ORNL, AGN	Qualified for 35-thousand-ft ocean depth

*DTIE: Please use "Hanford" instead of HAPO.

The promising experience with the SNAP-7 series led to an expansion in AEC's plans for ^{90}Sr devices ranging in power from 0.1 to 10 kW(e). The technology developed in the earlier programs made it possible to design a more flexible generator system. The isotopic power program is now organized to provide power systems in a number of discrete power levels for applications of a more general nature than heretofore. For example, the SNAP-21 [10- to 20-W(e) systems] generator program may be used for various deep-sea applications, navigational aids, seismological stations, oceanographic research, or hydrophone amplifiers. SNAP-23 [25- to 100-W(e)] is planned for surface applications, such as offshore navigational aids, unmanned seismological stations, microwave repeater stations, aircraft landing systems, and remote communications systems.[2,6]

The United Kingdom Atomic Energy Authority (UKAEA) is designing and building thermoelectric generators using <100-W $^{90}SrTiO_3$ for applications similar to those of the USAEC generators. Four to six devices have been completed in the RIPPLE (Radioisotope Powered Prolonged Life Equipment) program and several more are in various stages of design or construction (see Table 1.1). Isotopes,* Aerojet-General, and NUMEC are now marketing commercial generators using ^{90}Sr heat sources, and the USAEC is supplying the sources for them as well as for the RIPPLE generators. Fuel forms were being fabricated at ORNL (September 1967) from about 8 MCi of ^{90}Sr that was separated by Hanford between 1961 and 1965.

---

*In 1968 the Martin Company sold its nuclear activites to Teledyne, Inc., whose subsidiary, Isotopes, Palo Alto, Calif., will take over the Martin Company contracts and programs in this area.

Operation of Radioisotope-Powered Electrical Generators (3)

Long life and minimum maintenance have been the major incentives for the development of radioisotopic power sources for marine and terrestrial uses and for the United States space program. The power provided by suitable radioisotope sources can be as high as several watts per cubic centimeter of source material, with a useful life of tens of years. The kinetic energy of the electromagnetic or charged-particle products of radioisotope decay is either transformed directly into electricity or is transformed indirectly through a preliminary conversion to heat. Most of the devices developed to date use a thermoelectric generator to convert the heat to electricity.

Radioisotope-powered thermoelectric conversion systems have demonstrated reliability and maintenance-free lives of >40,000 hr and power levels up to 100 W(e). Their initial capital cost per electrical watt is high, but their cost on a watt-hour basis compares favorably with that for other energy sources for applications in remote and inaccessible areas. Even in relatively accessible regions, the cost of transporting alternative energy supplies can be of considerable significance, and in inaccessible regions, such as the North or South Pole, desert, or jungle, the additional costs of transporting materials and of servicing the systems increase tremendously.

A full cost analysis shows that radioisotope power generators are already competitive in price with other power generators for very remote regions. As technology develops and the costs of radioisotopes and complete systems decrease, they will become even more competitive.

These thermoelectric devices convert heat from the decay of the radioisotope to electricity through the use of thermocouples or thermoelements.

Separation Processes (3)

Strontium-90 is one of five long-lived products formed in relatively high yield in reactors from the fission of uranium. The other abundant fission products having half-lives greater than 6 months are ^{99}Tc, ^{137}Cs, ^{144}Ce, and ^{147}Pm. An attractive goal, envisioned for many years, has been an integrated separations process that would separate each fission product in turn and result in a reduced amount of radioactive waste. The goal remains incompletely realized, but most of these fission products now can be purified in megacurie quantity.[9]

Several processes---$PbSO_4$ carrier precipitation, ion exchange, and solvent extraction---accomplished the large-scale purification of ^{90}Sr at Hanford in the interval 1961-65. No similar scale production has been carried out since that time. The Hanford Waste Management Program unit of the Atlantic Richfield Hanford Company now separates a crude ^{90}Sr product for storage.

Purity Requirements[10] (4)

Because of design requirements for thermoelectric generators, stringent demands are made on the ^{90}Sr recovery process. Gamma emitters have to be removed to a level insignificant in comparison with the associated bremsstrahlung radiation in order to take advantage of the lower biological shielding requirements of ^{90}Sr-^{90}Y beta emitters. Thus the specifications for the purified product require that each gram of ^{90}Sr contain less than 0.0015 Ci of gamma emitters with energies greater than 2 MeV, less than 0.015 Ci in the 1- to 2-MeV range, and less than 0.15 Ci in the 0.2- to 1-MeV range. This corresponds to separation factors of the order of 10^4 to 10^5 from ^{144}Ce, ^{95}Zr-^{95}Nb, ^{106}Ru, and most other gamma-emitting fission products.

A high degree of purification from inert contaminants is also required so that the specific heat-generating rate of $^{90}SrTiO_3$ will equal or exceed* the design criterion of the generators (0.5 W/cm^3). The contaminants have to be less than 25 wt % of the total cation weight, and the ^{90}Sr content has to be greater

*Present sources 0.85 W/cm^3.

than 36% of the total cation weight.

The waste solutions resulting from the recovery of uranium from spent reactor fuel elements, which constituted the starting material for the recovery of fission products, were highly acidic and contained large quantities of inorganic ions such as sulfate, nitrate, iron(III), sodium, aluminum, and chromium (see Table 2 for the composition of Purex 1WW waste). Decontamination factors* of up to 2000 for iron, 700 for lead, 400 for aluminum and chromium, and 10 for calcium and barium were required at the time of the SNAP-7 program.

Strontium-90 is produced as a fission product during reactor operation along with ^{89}Sr, which has a half-life of 50.5 days, and other strontium isotopes (including the stable isotopes ^{86}Sr and ^{88}Sr). Yttrium-90, the decay daughter in secular equilibrium with ^{90}Sr, emits a very high energy beta particle. The intense high-energy beta activities of ^{89}Sr and ^{90}Y, as well as the softer beta activity of ^{90}Sr, result in high-energy bremsstrahlung radiation, for which heavy shielding is required. Unless the strontium has aged sufficiently, the 50.5-day ^{89}Sr also contributes a substantial fraction of the heat of the isotopic mixture.

The radioisotopic properties of fission-product strontium are given in Table 3.[11] A year of aging is necessary for a heat source with only a minor contribution from ^{89}Sr; otherwise, the source will show a high initial decrease in heat output, characteristic of the short-lived ^{89}Sr.

Removal of ^{89}Sr stabilizes the generator temperatures to match the narrow operating range of PbTe thermocouples.

Strontium, ingested or inhaled, concentrates in the bones of animals. Although less hazardous to man [i.e., characterized by a larger maximum permissible concentration (MPC)] than the alpha emitters, it is more dangerous than most other fission products.

*Ratio of initial to final weight of contaminant per gram of ^{90}Sr.

Table 2. TYPICAL COMPOSITION OF PUREX 1WW WASTE

Component	Concentration, moles/liter
H^+	4.0
SO_4^{2-}	1.0
NO_3^-	4.5
Na^+	0.6
Fe^{3+}	0.5
Al^{3+}	0.1
Cr^{3+}	0.01
Ni^{2+}	0.01
UO_2^{2+}	0.005
Sr^{2+}	0.002
Cs^+	0.003
Sm^{3+}	0.006
Ce^{3+}	0.003
Ru	0.003
Ca^{2+}	0.005
Zr	minute amount
Si	minute amount
PO_4^{3-}	minute amount
Solids	10%

Table 3. RADIOISOTOPIC PROPERTIES OF FISSION-PRODUCT STRONTIUM

Isotope	Half-Life	Beta energy, max MeV	Gamma energy, MeV
^{89}Sr	50.5 d	1.463	0.91 (0.009%)
^{90}Sr	28.5 y	0.546	None
^{90}Y	64.0 hr	2.28	None

Hanford $PbSO_4$-Carrier Precipitation Process (4)

This precipitation process was developed and used at Hanford to recover megacurie amounts of crude ^{90}Sr for final purification.[12,13] Initially, the process feed was concentrated Purex 1WW waste (Table 2 which contained essentially all the fission products and relatively large amounts of contaminant metals and sulfate in ~4 M HNO_3. Feed preparation with sugar-treated waste (STW*) includes a centrifugation step to remove solids (primarily silica and sulfates) which carry appreciable quantities of fission products. These solids are then leached with nitric acid to recover the fission products, and the leach solution is combined with the original centrifuged (solids-free) solution for processing. In the case of stored alkaline wastes, the strontium-containing sludge is sluiced from the waste tanks and dissolved in nitric acid.

A typical flowsheet of this recovery process, which has had several variations, is shown in Fig. 1. Cerium and other rare earths are precipitated as the sodium—rare-earth double sulfates along with the strontium by adjusting the sulfate concentration to ~1 M and the pH of the solution to 1 to 2. Lead nitrate is added to carry strontium sulfate, and an iron complexing agent (such as tartrate or hydroxyacetic acid) is added to avoid precipitation of ferric sulfate. The precipitated sulfates are metathesized with a mixture of NaOH and Na_2CO_3 carbonate to remove lead (by conversion to soluble plumbite) and to convert the strontium, along with cerium and the other rare earths, to acid-soluble carbonates. These carbonates are dissolved in nitric acid.

Strontium can be concentrated by evaporation or by precipitating strontium carbonate and dissolving it in nitric acid. The crude solution is then ready for ion-exchange or solvent-extraction processing.

*STW is similar to Purex 1WW but contains only about 0.5 M HNO_3.

ORNL DWG 67-92R1

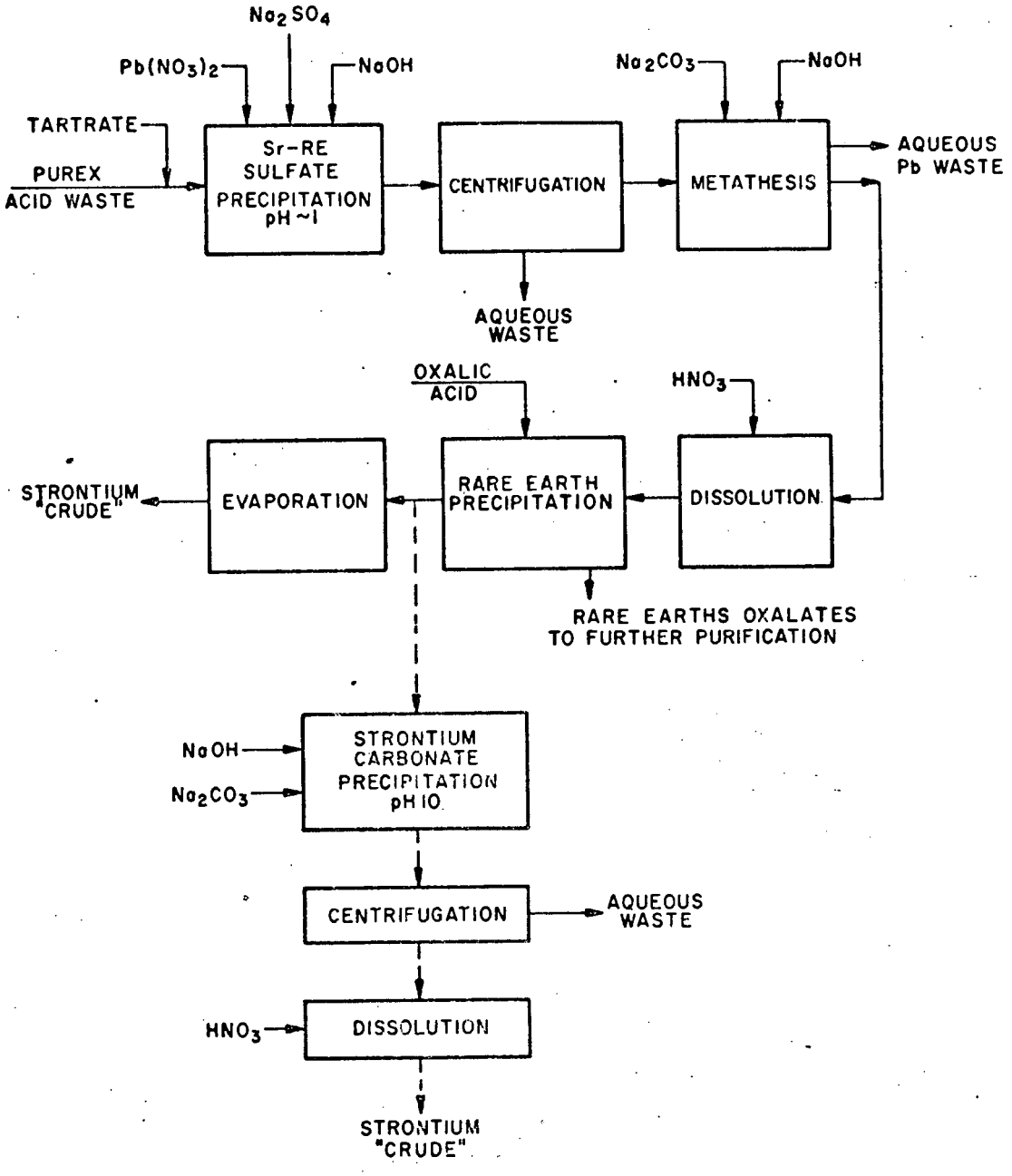

Fig. 1. Strontium and rare-earth recovery from Purex waste by $PbSO_4$-carrier precipitation.

In a series of pilot-plant runs testing the Waste Management process, recovery of strontium was >95%, with overall strontium decontamination factors of 17 to 460 from iron, 90 to 100 from aluminum, 370 to 500 from manganese, 55 to 90 from nickel, 7 to 60 from calcium, 28 to 125 from magnesium, and 1 to 8 from lead.[14]

Hanford Solvent-Extraction Process (4)

To a large extent this process was based on modifications and further development of the solvent-extraction technology developed at ORNL using di(2-ethylhexyl)phosphoric acid (D2EHPA) for recovery and purification of strontium and rare earths from Purex waste.[15,16] Many process variations and flowsheets have been devised at Hanford for different process objectives and for handling different waste compositions, but only the one used for production is described here.

The first Hanford solvent-extraction process for fission product separations[10,13,17] was developed specifically for use in the Hot Semiworks Pilot Plant to purify ^{90}Sr for SNAP-7 program requirements. Feed is prepared from crude strontium product solution, recovered by the $PbSO_4$-carrier precipitation process, by addition of acetate for buffering, sodium hydroxide for adjusting acidity, and EDTA or diethylenetriaminepentaacetic acid (DTPA) for complexing the extraneous metals. This complexant (or an alternative) suppresses extraction of iron, lead, and certain fission products such as zirconium-niobium and ruthenium. In the process flowsheet (Fig. 2), strontium, calcium, residual mixed rare earths, and some sodium are coextracted with 0.4 M D2EHPA and 0.2 M TBP in hydrocarbon diluent.* A large portion of the extracted sodium is scrubbed from the solvent at pH 2.6 to 3.0 with sodium citrate solution. Strontium is stripped selectively in a second contactor with 1 M citric acid at pH 2 to separate it from calcium and rare earths. To obtain a more concentrated product solution, about one-half of the strip solution is recycled to the extractor. The product is further purified by either an ion-exchange cycle or a second solvent-extraction cycle.

Improved Hanford Solvent-Extraction Process

Hanford has devised processes for direct treatment of low-acid Purex wastes by solvent extraction to recover strontium and rare earths.[18] A typical flowsheet[19] is shown in Fig. 3. The aqueous feed is complexed with citric or tartaric acid or with DTPA and adjusted with NaOH to a pH of 4 to 5. Strontium and rare earths are coextracted at about 50°C with D2EHPA (partially in the sodium salt form) and TBP in a hydrocarbon diluent, and the solvent is scrubbed with dilute formic acid—sodium formate solution for the reduction of sodium concentration. Strontium is stripped selectively from the extract with 0.028 M HNO_3, the rare earths with 1 M HNO_3, and the waste metals with 2.5 M caustic

*Amsco, Shell spray base, or normal paraffin hydrocarbon.

ORNL DWG 67-1483

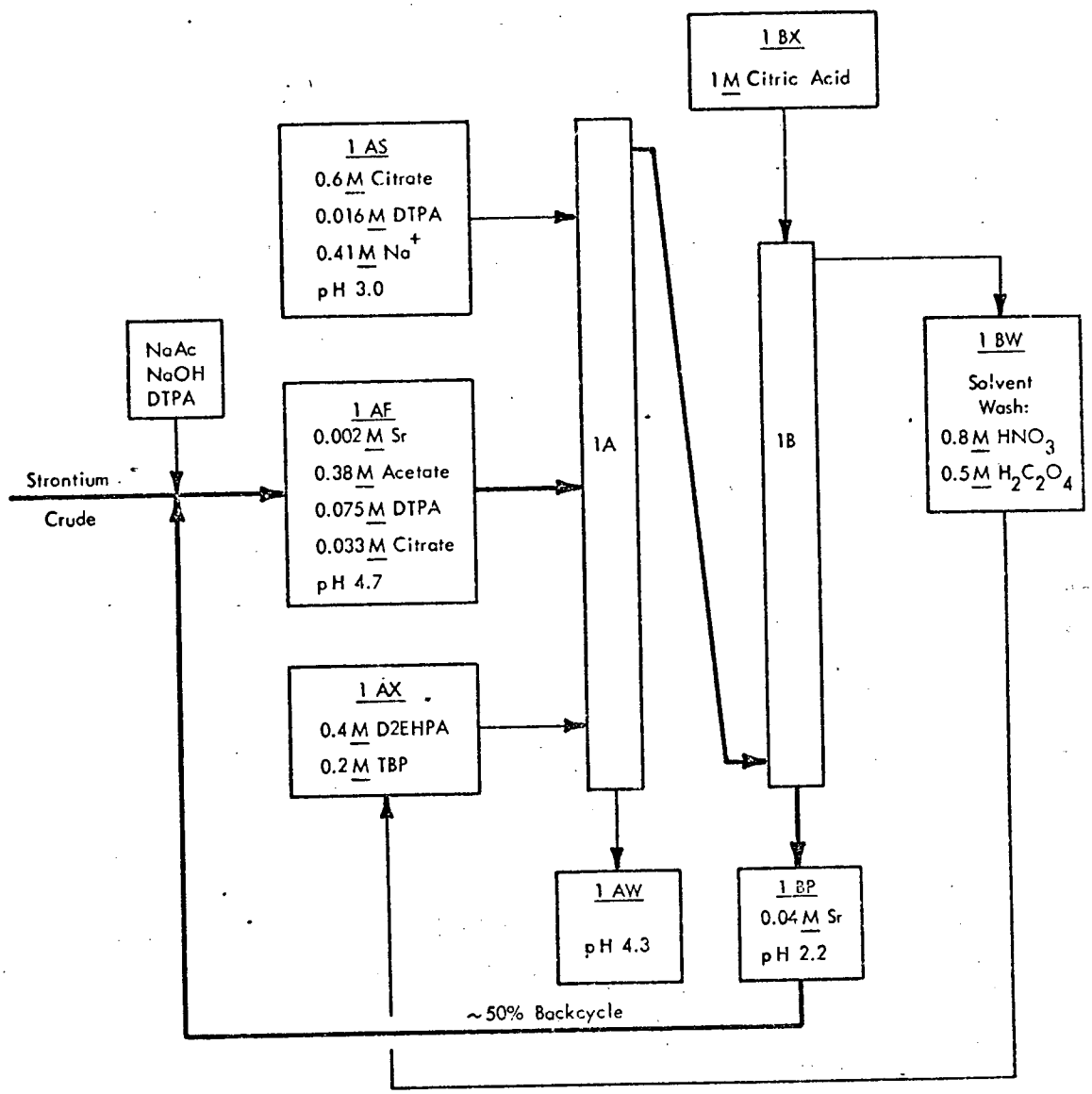

Fig. 2. Strontium recovery using one cycle of solvent extraction.[19]

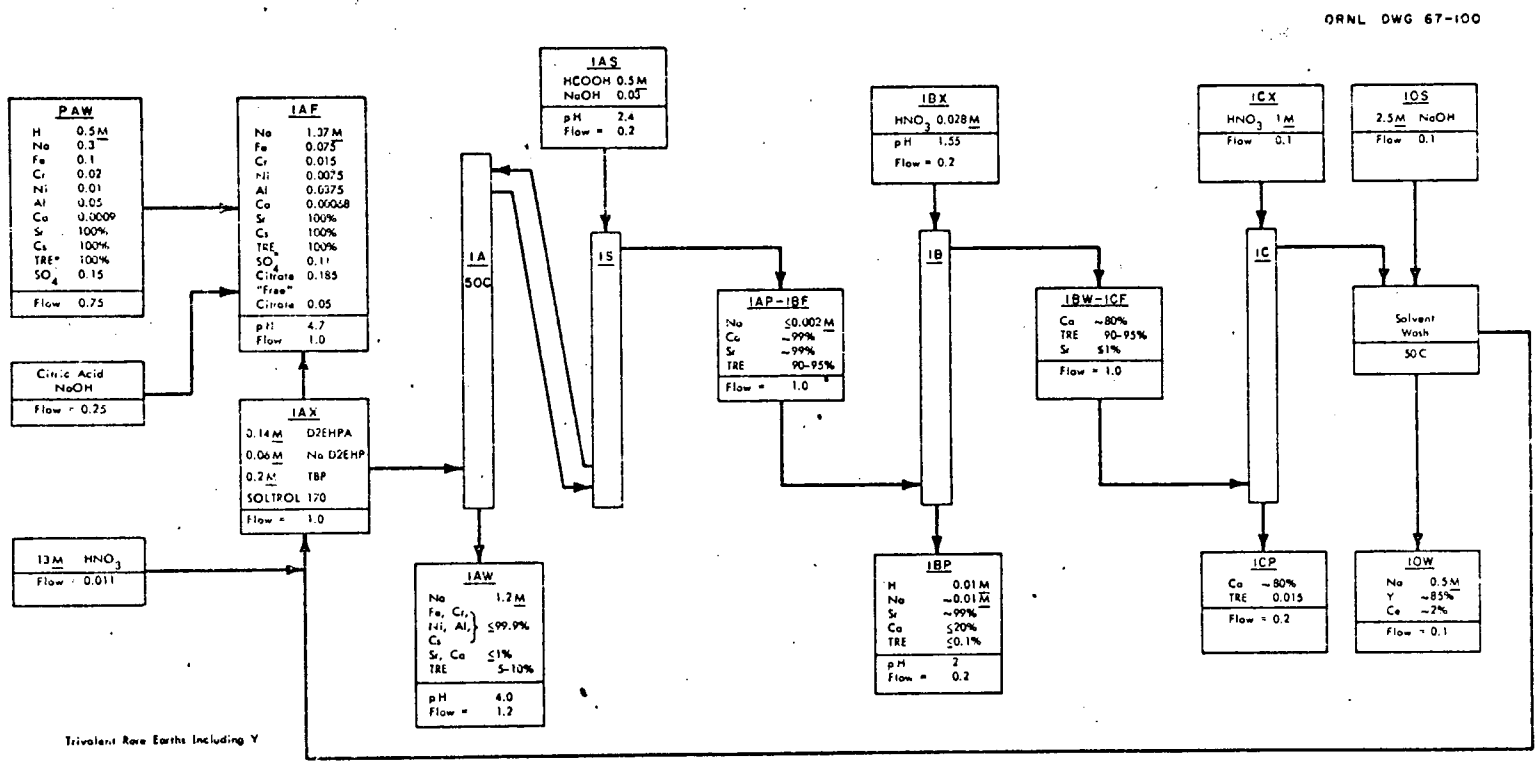

Fig. 3. Recovery of strontium and rare earths from Purex PAW.. [Shows the composition of waste expected at Hanford if the ferrous sulfamate reduction method for partitioning plutonium is replaced by reduction with U(IV); the waste is relatively low in iron and sulfate concentration.]

solution at 50°C. The D2EHPA is then partially converted to the hydrogen form before it is recycled to the extractor.

The Hanford Waste Management Program now uses the $PbSO_4$-carrier precipitation process or a solvent extraction with D2EHPA or a combination of the two processes to concentrate and purify ^{90}Sr from Purex wastes for storage.[20] A typical product solution for storage is shown in Table 4. From this solution SrF_2 is precipitated with NaF. The SrF_2 is dried and stored.

TABLE 4. Crude Strontium Composition

Constituent	Concentration Molarity	g/ℓ
H	2.85	2.8
Sr	0.096	8.4
Na	0.51	11.7
Ca	0.158	6.3
Mg	0.183	4.5
Ba	0.0016	0.22
Mn	0.201	11.0
Ni	0.0024	0.14
Al	0.041	1.1
Cr	0.0055	0.29
Fe	0.011	0.61
Pb	0.010	2.1
^{144}Ce-Pr	(232 Ci/ℓ)	
^{90}Sr	(705 Ci/ℓ)	

Preparation of Strontium Titanate (3)

Purified ^{90}Sr is converted to $SrTiO_3$ in the next step of making a ^{90}Sr heat source. This and subsequent process steps are carried out at Oak Ridge National Laboratory in the Fission Products Development Laboratory (FPDL).[21]

The purified ^{90}Sr is shipped as the solid carbonate from Hanford to ORNL.[22,23] A schematic outline of the process steps for converting purified $SrCO_3$ to encapsulated $SrTiO_3$ is shown in Fig. 4.

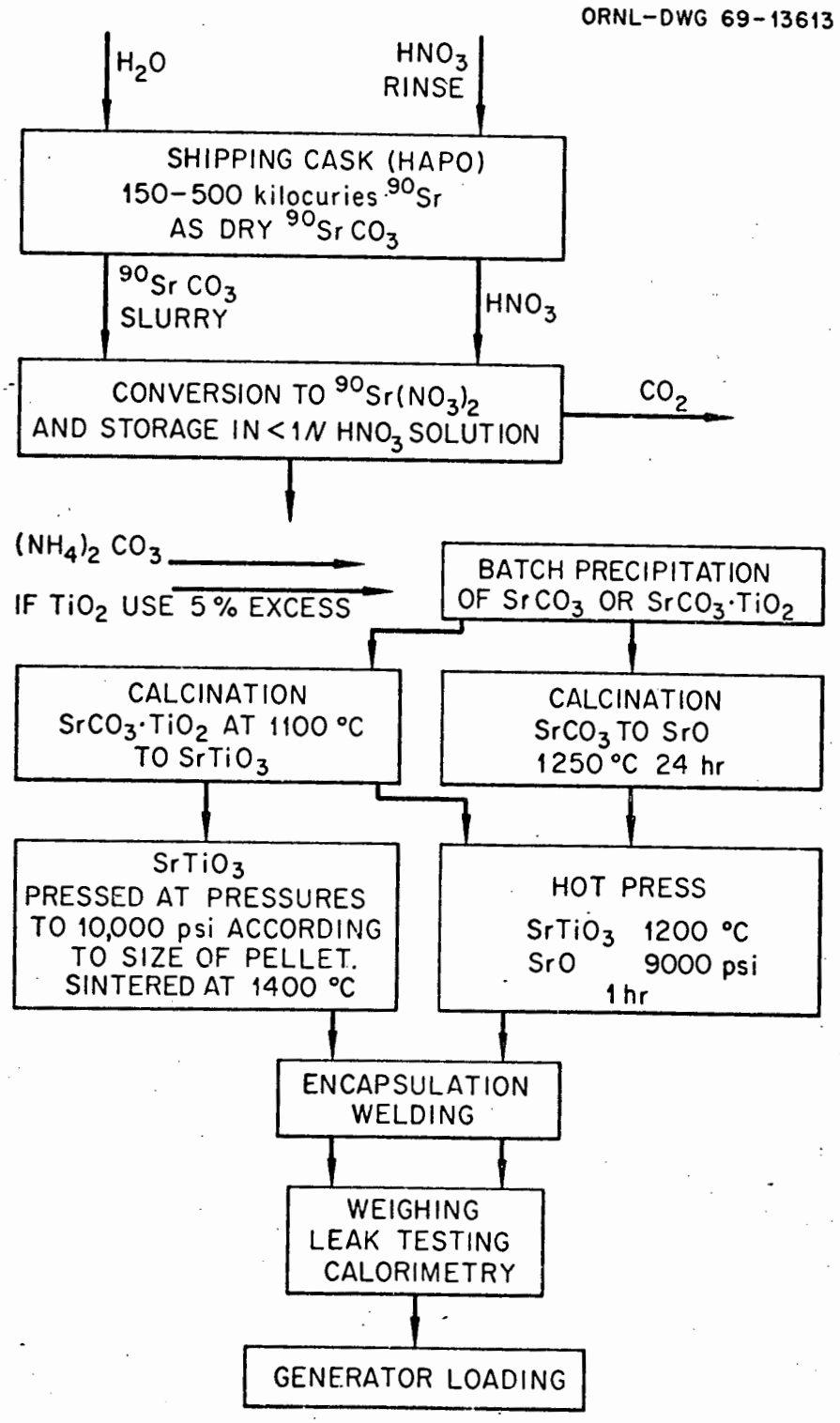

Fig. 4. Schematic outline of process steps for converting purified $SrCO_3$ to encapsulated $SrTiO_3$.

Present Procedures for Compound Preparation (4)

Feed Material (5)

The first step in preparing the feed material is the unloading of the HAPO II casks by drawing water through the cask under steam-jet vacuum and slurrying the $^{90}SrCO_3$ into a collection tank. After most of the $^{90}SrCO_3$ is removed from the cask, the cask is rinsed with 2 M nitric acid; the acid is added to the collection tank to convert the $^{90}SrCO_3$ slurry to $^{90}Sr(NO_3)_2$ solution. The amount of acid used is calculated so as to yield a final solution ~1 M in HNO_3 for storage. The cask is dried, sealed, leak-tested, decontaminated and then shipped back to Hanford.

The $^{90}Sr(NO_3)_2$ solution is sampled and stored at the FPDL in stainless steel water-cooled tanks, which can hold 6 MCi of $^{90}Sr(NO_3)_2$ feed solution. The radiochemical purity of this material is >99.9% (exclusive of ^{89}Sr, the amount of which is dependent on the age of the material); its major inert contaminant is calcium. Table 5 shows a typical feed analysis.

Table 5. FEED COMPOSITION*

Range of composition, wt %		
Cation	Maximum	Minimum
Sr	97	92
Ca	5	2
Ba	2	0.5
Mg	2	0

*One gram of ^{90}Sr will produce 0.0232 g of ^{90}Zr after one year's decay.

Strontium Titanate. (5) A slurry of TiO_2 in a solution of NH_4OH and $(NH_4)_2CO_3$ is mixed with $Sr(NO_3)_2$ solution to form a mixture of $SrCO_3$ and TiO_2 solids. The solids are filtered off and calcined to form $SrTiO_3$. This method has been used to prepare all of the $SrTiO_3$ powder produced at FPDL. The use of Na_2CO_3 instead of $(NH_4)_2CO_3$ was the only variation in the production method of Martin Company, Nuclear Division.*

Batches of ~40 kCi of $^{90}Sr(NO_3)_2$ solution are transferred from storage into a 150-liter stainless steel precipitation vessel. This vessel is equipped with an agitator, a heating-cooling jacket, and a bottom-discharge line, as well as the standard instrumentation, sampling and off-gas lines, and other services. The solution is sampled; then it is adjusted, by evaporation and addition of ammonium hydroxide, to a ^{90}Sr concentration of ~10 g/liter (~ 750 Ci/liter) at pH 3 to 5. Based on the total ^{90}Sr content in the batch and the elemental analysis of the feed solution, the amount of TiO_2 required to form the titanates of the alkaline earths present is calculated. This amount of TiO_2 plus a 5% excess is slurried into an ammoniacal $(NH_4)_2CO_3$ solution of sufficient concentration to yield a final precipitation solution 0.7 M in $(NH_4)_2CO_3$. The $^{90}Sr(NO_3)_2$ solution is heated to 70°C; then the $(NH_4)_2CO_3$-TiO_2 slurry is added. The

---

* Martin Company, Nuclear Division prepared SNAP-7B and F heat sources in their Quehanna Pilot Plant.[24]

slurry is digested, cooled, and filtered through porous Al_2O_3 filter thimbles. No difficulty is experienced in the filtration. The $^{90}SrCO_3$-TiO_2 mixture on the filter is washed with dilute $(NH_4)_2CO_3$ solution; then it is dried by drawing air through the filter. The Al_2O_3 filter thimbles have a total volume of ~1800 ml, and the volume of 40 kCi of dried precipitate is ~1500 ml.

After the filter thimble is removed from the system, the heat generated by the ^{90}Sr dries the precipitate completely. Since a normal batch has a thermal output of ~250 W, careful handling of the material is necessary to prevent damage to manipulator boots and other materials in the cell. When the precipitate is dry, it is stirred to break up any lumps; then the filter thimble is inserted into a furnace. The furnace temperature is increased at a rate of 100°C/hr to a final temperature of 1100°C. This temperature is maintained for 4 hr; then, after the furnace is cooled at a rate of 100°C/hr to <400°C, the thimble is removed.

Batches of ~10 kCi each of the calcined $^{90}SrTiO_3$ are ground in a stainless steel blender to produce a uniform powder. The $^{90}SrTiO_3$ product, which is usually light brown in color, can be handled, weighed, and transferred using standard laboratory size equipment adapted for manipulator cell use. The product is assayed calorimetrically for ^{90}Sr content. An aliquot of the powder is weighed into a brass cup and the heat output is measured by means of a differential temperature calorimeter.
Several calorimetric determinations are run on each powder batch to ensure product uniformity.[25,26] The powder has the approximate composition given in Table 6.

Table 6. TYPICAL $SrTiO_3$ COMPOSITION

Component	Wt %
Strontium	36 (~30 Ci of ^{90}Sr per g of powder)
Titanium	28
Calcium	3
Zirconium	5
Barium	0.5
Magnesium	0.5
Oxygen	26
Iron, lead, carbon	Traces (<1% total)

After a batch of product is assayed, the powder can be formed into pellets immediately; it may be packaged for shipment as powder; or it may be stored. Temporary storage is done in stainless steel screw-top cans, which are loaded with up to 7-kCi lots of powder and stored in dry water-cooled tubes in an in-cell storage facility at the FPDL. This storage system has a capacity of approximately 2 MCi of $^{90}SrTiO_3$ powder. For long-term storage, welded stainless steel containers are used, each of which holds 3.3 kCi of powder. These containers also serve as shipping cans for large amounts of $^{90}SrTiO_3$; larger or smaller shipments can be made in similar welded containers of various sizes. A circumferential groove is provided in these containers so that they can be opened with a tubing cutter.

From the feed analysis, the ratio of ^{90}Sr to total Sr, Ca, Ba, and Mg is calculated, and from these data the heat output of a particular batch can be related to its chemical composition. When the composition of a product is outside the range desired, the powder may be blended mechanically with other products, which vary in the other direction, to produce

products of the desired grade. Several product batches of varying compositions may be combined in one blending operation. Standard blending practices are carried out in a stainless steel blender. Successful blendings have been made by using powders in which the TiO_2 was deficient by as much as 30% or was 40% in excess of the stoichimetric amount, but most powders are much closer in composition. When one of the powders is deficient in TiO_2, the blended material is recalcined. No differences have been found in the pellet-forming characteristics of powders that were prepared from the same feed solution, even when one powder batch was the result of a blending operation and the other was a single batch that did not require blending. Hot-pressed pellets may be made with TiO_2-to-SrO ratios that vary from TiO_2 in 30% excess of stoichiometric to pure SrO by changing the amount of TiO_2 in the slurry.

Strontium Oxide (5)

The chemical processing operations for the preparation of ^{90}SrO are very similar to those for $^{90}SrTiO_3$. The precipitation procedures simply eliminate the TiO_2 addition. Calcination of the dried $^{90}SrCO_3$ to ^{90}SrO is carried out at 1250°C for 24 hr. The ^{90}SrO products are converted to pellets immediately after calcination. During the short period between calcination and pelletization (while samples are being assayed, dies are being loaded, etc.), the bulk ^{90}SrO is kept at ~550°C to minimize combination reactions with atmospheric water and carbon dioxide. The possibility of these adverse reactions eliminates ^{90}SrO as an inventory form for storage.

Analytical Methods (4)

Process control depends largely on calorimeters for the analysis of ^{90}Sr. Those calorimeters designed and constructed at FPDL measure the rate of heat production of the radioactive material. Two general types are used---one for solid samples[25,26] consisting of powder, pellet, or encapsulated source and the other for solutions of radioactive strontium.[27] Additional analytical methods employed in ^{90}Sr processing are shown in Table 7.

Table 7. ANALYTICAL METHODS USED IN Sr PROCESSING

Quantity To Be Found	Method	References
$SrTiO_3$	Fusion and dissolution	28
^{90}Sr	Gross β by proportional counters	29a, 30a, 31
^{89}Sr	Yttrium removal with D2EHPA, then Sr absorption study	29b, 30b
Other fission products	Gamma spectrometry	32, 33
Mass analysis	Mass spectrometry	29d, 29e
Ca, Ba, Sr	Flame spectrophotometry	29c, 34
Ti, Zr, Mg, Fe, Pb	Emmission spectroscopy	30c, 35

Fabrication of Fuels (3)

In the next process step, powdered $SrTiO_3$ or SrO is converted into pellets suitable for encapsulation. Design of the source, shield, and generator requires reproducible physical properties in the pellets, especially accurate dimensions. Ideal physical characteristics of a source include high density, high thermal conductivity, high melting point, high thermal stability, and good mechanical properties.

Several methods for fabricating materials (especially polycrystalline ceramics) into dense pellets are described in the literature.[36-39] In general all these methods consist in the application of heat and/or pressure over a period of time. The heat and pressure may be applied simultaneously or in sequence. Forming methods can be divided into three groups:

1. Cold-forming, which usually consists of the application of pressure to the material. Cold-forming methods include slip casting; extrusion; injection molding; die pressing; isostatic pressing; vibratory compaction. The compacts produced by pressing may be subsequently heated to yield higher densities.
2. Hot-forming, which consists in the simultaneous application of heat and pressure; the hot-forming methods are hot-pressing by uniaxial pressure, biaxial pressure, or isostatic pressure with gas or liquid medium or with semifluid "sand"; hot swaging.
3. Melt-casting, which consists of the application of heat, but with no pressure applied.

The application of pressure in any hot- or cold-forming method sometimes involves a high energy-rate procedure such as pneumatic impaction, explosion, or electrical discharge.

All the methods of cold-forming, hot-forming, and melt-casting were evaluated for use with strontium fuel forms. The following methods were tested experimentally: die pressing - heat treating; isostatic pressing - heat treating; uniaxial hot pressing; biaxial hot-pressing; melt-casting. The methods of isostatic hot-pressing and pneumatic impaction at high temperatures were evaluated by visiting and consulting with other workers, and other methods were evaluated by a literature search.

From this study, several general conclusions were drawn with reference to forming of strontium fuels. With the exception of isostatic pressing (followed by firing) which requires expensive and complicated equipment, the cold-forming methods have two primary advantages over the hot-pressing method for $SrTiO_3$: they are simple to carry out in a hot cell and they are inexpensive. However, the densities achieved with cold-pressing are low, and the reproducibility and dimensional control are poor. These factors are difficult to regulate even with closely controlled and reproducible powders. In the case of strontium fuels, the control of particle size (a critical parameter in cold-forming methods) is not feasible. In the case of isostatically pressed samples, if the pressure exceeds the strength of the particles, high unfired (green) densities can be obtained. The small additional shrinkage on firing allows good control of dimensions.

The hot-forming method (except isostatic hot-pressing) has two distinct advantages over the cold-forming or melt-casting methods: improved dimensional accuracy of the compact formed and adaptability of the method to a wide variety of materials. The hot-forming method also has the advantage that two materials can be allowed to react to produce the desired compound as the compact is being formed (reactive hot-pressing). Isostatic hot-pressing gives poor dimensional control unless the powder is prepressed to densities greater than 85% of theoretical; this is not possible with the ^{90}Sr power fuels investigated. In addition, isostatic hot-pressing is difficult and expensive for hot-cell operation.

Uniaxial or biaxial hot-pressing can be accomplished readily in a hot cell with moderate equipment cost.

Melt-casting methods are more applicable to materials that melt below 1200°C than with current strontium fuels having high melting points (Sr_2TiO_4, 1860°C; $SrTiO_3$, 2040°C; and SrO, ~2400°C). The melt-casting method was not considered competitive with hot-pressing. In general the densities obtained by casting are low due to high void volumes and to formation of casting "pipes."

Strontium Titanate (4)

Both cold-press and sinter and hot-press techniques have been used for forming multikilocurie $SrTiO_3$ pellets, but the cold press and sinter method failed to produce SrO pellets of adequate density. Since 1966, most of the $SrTiO_3$ and SrO pellets were formed with the hot-press technique. A hot press for radioactive material in a hot cell was designed and fabricated[40] for use at FPDL, as well as a small hot press for laboratory or glove box operation[41] (Figs. 5 and 6).

The initial hot-pressing tests on $SrTiO_3$ were done on nonradioactive titanate in equipment at the Oak Ridge Y-12 Plant Development Division. These tests indicated that essentially theoretical densities could be obtained on 2-in.-dia compacts by hot-pressing at 1300°C for 30 min with a pressure of 2500 psi. The densities obtained were 5.00 g/cm^3 (calculated density = 5.05). The $SrTiO_3$ was freshly precipitated and calcined powder. Full pressure was applied to the press at the start of the heating cycle.

Subsequent tests over a wide range of conditions and with various powders led to several conclusions. The factors that control the densification are discussed separately.

While a hot-pressing procedure is relatively insensitive to the history of the powder, it has been observed that slightly higher densities for given

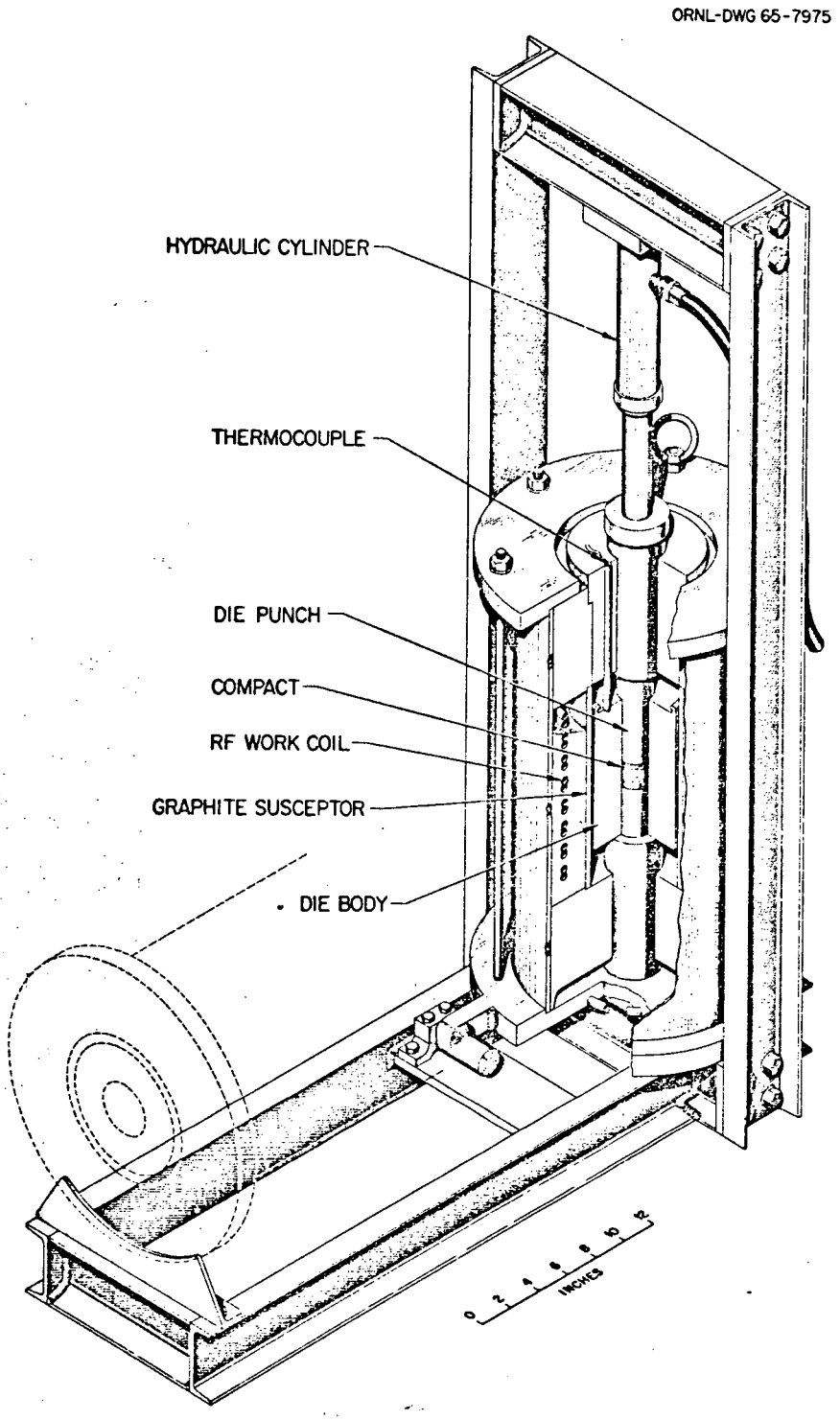

Fig. 5. Hot Press for Remote Operation

ORNL-DWG 65-7974

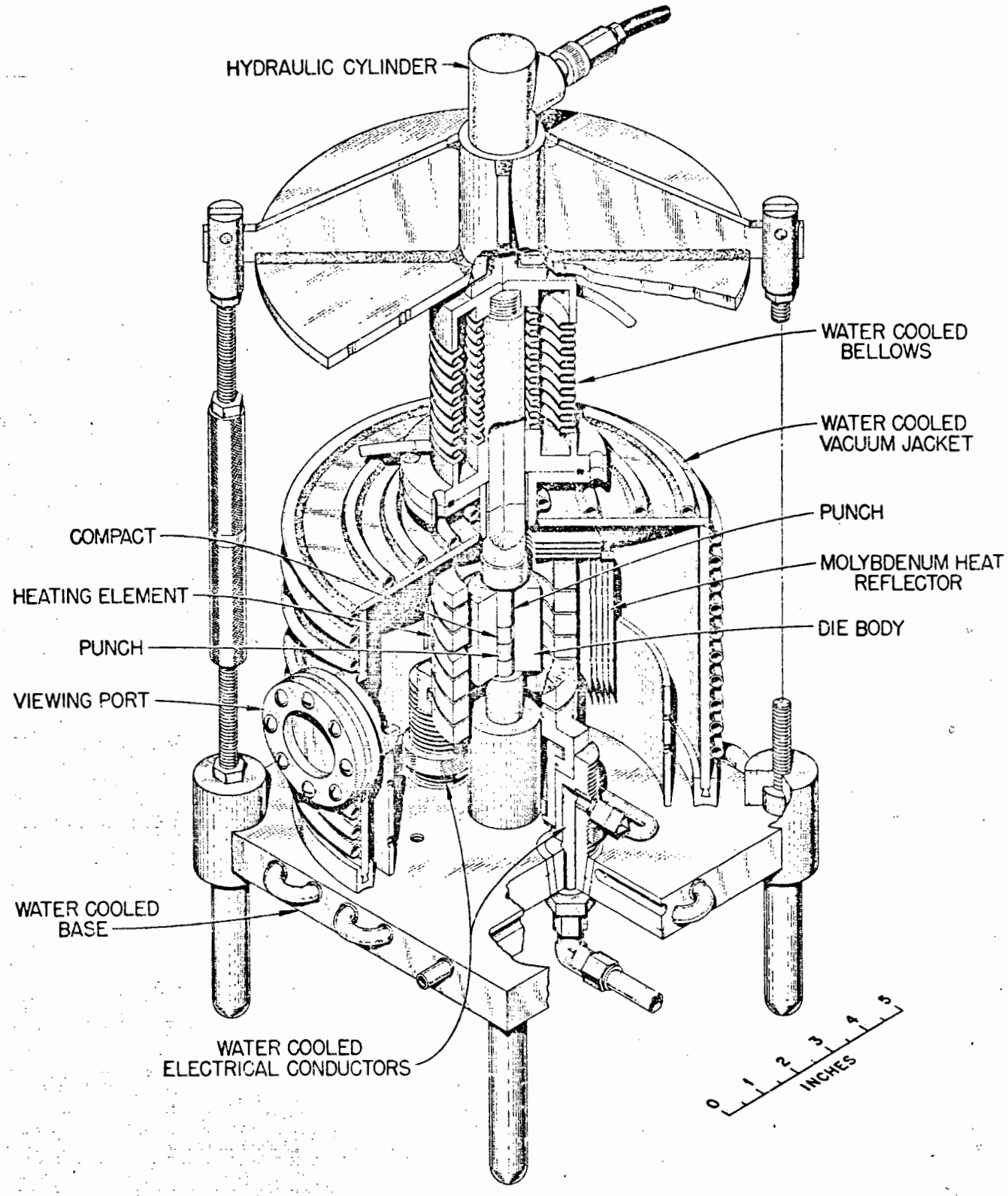

Fig. 6. Miniature Hot Press

pressing conditions can be obtained with freshly prepared powder. The next highest densities are obtained with aged $SrTiO_3$ powder, and the lowest with highly sintered or previously hot-pressed and crushed material.

In general the higher the temperature at which the pellet is pressed the higher the density (up to 100% of theoretical) or the shorter the time and the lower the pressure to obtain a given density. The temperature should never exceed 1450°C. At this temperature the pellet rapidly decreases in density with extensive fragmentation. This is presumed to be due to a solid-solid phase transition at that temperature. At 1350°C, densification of all powders tested was sufficiently rapid for pressing times of less that 1 hr to be required.

The pressure that can be applied to a die is limited by the die geometry and the strength of the graphite. A pressure of 4 thousand psi is adequate for a pressing time of less than 1 hr. Die designs for 4 thousand psi on 4-in.-dia compacts are considered practicable. Pressures in excess of 4 thousand psi, when strength considerations permit, will reduce the pressing time required. Sintering of $SrTiO_3$ powder occurs at an appreciable rate at 900 to 1000°C. For this reason the pressing should be started at 900°C.

Strontium titanate pellets of 2-in. diameter were hot-pressed to essentially theoretical density under the following conditions:

Maximum temperature	1200°C
Pressure	1000 psi at 1000°C, increasing to 4000 psi at 1200°C
Time at maximum temperature	1 hr

The theoretical density of pure $SrTiO_3$ is 5.11 g/cm^3. The calculated density of fission-product $^{90}SrTiO_3$ with the Mg, Ca, and Ba impurities is 5.05 g/cm^3.

Future application of $SrTiO_3$ may require sources with diameters of up to 5 in. Strontium titanate treated at high temperatures (1200 to 1400°C, the temperatures for hot pressing) in a neutral or reducing atmosphere undergoes a reduction in the oxygen stoichiometry. Under reducing conditions, $SrTiO_3$ has the composition $SrTiO_{2.99}$ (Ref. 41). Pellets of reduced $SrTiO_3$ are jet black. If the pellets are of high density and reduced, they are severely strained and subject to cracking. Annealing cannot be accomplished

at $<2000^{\circ}C$. Pellets of $SrTiO_3$ 3-in. in diameter have been hot-pressed from both active and inactive $SrTiO_3$. All 3-in.-dia radioactive pellets have exhibited extensive cracking due to thermal gradients. Pellets of inactive $SrTiO_3$ are highly sensitive to thermal shock, and also frequently crack. To help maintain the integrity of the pellets, several conditions of the preparation and fabrication procedure were studied in order to determine their influence on cracking. The only significant result is the observation that low-density pellets (<4.0 g/cm^3) are much less likely to crack.

Two methods were tested successfully on 1-in.-dia pellets. These were (1) inclusion of randomly oriented 5-mil wire, 1/4-in. long, in the pellets, and (2) jacketing the pellet with platinum wire gauze. The wire gauze is mechanically held in the surface of the pellet. Further work is required to demonstrate the applicability of either technique to 4-in-dia pellets. A later technique was developed, using nickel wire screens incorporated in the horizontal plane. This has been used on pellets as large as 4 in. dia (300W) with good success. The cost savings relative to platinum are significant.

In the hot pressing procedure the powder is first pre-pressed and the pellet charge is added incrementally to the Pt-lined die body holding the bottom punch. After the addition of each 20% increment, the powder is pressed at 2000 psi with a stainless steel punch. After all the charge has been added, the platinum sleeve is folded down and the top punch inserted. (Depending on the height of the pre-pressed powder, a platinum cap may be placed on top of the powder before the sleeve is folded down. The top portion of the sleeve is notched to allow folding of the excess platinum so as to either cover the powder of hold the cap in place.

The loaded die body is removed from the pre-pressing assembly and inserted into the hot press; the guide collar and drive punch (shown at right) are then inserted on top of the die body to align the system. Thermocouples are inserted through penetrations in the guide collar so that they contact the die body. The hot press is then raised to the vertical position and a set of brass shims and mica insulators are placed between the graphite drive punch and the hydraulic press ram. The hot press is

heated by means of a radio frequency motor generator to 1100°C, then a pressure of 4000 psi is imposed. While the pressure is still on the system, the hot press temperature is raised to 1200°C and the pressure and temperature are maintained for 1/2 hour. The pressure is then relieved and the hot press is cooled to approximately 300°C. During all periods in which the hot press is above 300°C, a flow of argon is maintained through the hot press cavity.

The die body is removed from the hot press and placed into the prepressing assembly. A steel drive punch is used to extrude the punches and pellet, which are allowed to drop into a handling tray. The completed pellets are weighed and measured. A ring gage with I.D. identical to the capsule is used to check diameter and roundness of the pellet.

The capsules are degreased and the capsules and caps are wrapped in plastic for insertion into the cell. Pellets are inserted into the capsules and the press-fit lid is fitted. The flat plate and the taper on the cap serve to force the cap evenly into the capsule, thus forming an even weld area. The loaded capsules are finally welded, leak tested, and assayed calorimetrically.

Handling tools used in the cell are made of stainless steel. During pellet fabrication and capsule loading, no water is used in the cell and no organic materials are allowed to contact the fuel. Since the die bodies

are made of graphite, some graphite will adhere to the platinum surfaces of the pellets; this can be seen as discoloration on the pellets. Pellets are brushed with stainless steel brushes, but no other cleaning is done on them. Completed pellets are stored on aluminum oxide trays and pellets and capsules are handled with stainless steel tools.

During welding, the capsules are held in a brass chill block. Cotton swabs are used to clean weld areas and paper smears are used to detect contamination. Decontamination solutions used for final capsule cleaning are detergents, weak nitric acid, and water.

Strontium Oxide (4)

Three 202 W ^{90}SrO heat sources were prepared by hot pressing. Four batches of ~35 kCi of $^{90}SrCO_3$ each were prepared, and the dried $^{90}SrCO_3$ powder was calcined in air at 1200°C for a minimum of 24 hr. The pellets were of excellent appearance with no change in appearance or dimensions after 10 days.

Experience indicated that most of the densification occurs at less than 800°C. Tests were made with full pressure applied to the die punch, beginning at room temperature and increasing to 1200°C. If the temperature is increased at a rate of 100°C/hr from 750 to 850°C, full densification is attained at 850°C. However, if the temperature is raised to above 1200°C before pressure is applied, the density does not exceed 4.4 g/cm^3 even if the temperature is increased to 1600°C. The above experiments were done in a vacuum hot press with a capacity for up to 1-in.-dia pellets. The results of the above experiments suggest that either a large change occurs in the surface energy of the powder at about 850°C or a sintering aid which exists as an impurity in the SrO powder is destroyed at that temperature. The latter is believed to be more likely. Small amounts of either $Sr(OH)_2$ or $SrCO_3$ could be present and account for the low-temperature sintering. As a matter of precaution, the pellets are heated to 1200°C following densification to calcine any $Sr(OH)_2$ or $SrCO_3$ that might be present.

Estimates from thermodynamic data predict that SrO will not react with carbon to produce strontium carbide at temperatures of less than ~1500°C. Since the final procedure does not require a temperature in excess of 1200°C, tests were made on hot pressing SrO directly in graphite dies instead of molybdenum-lined dies. The SrO pellets were analyzed for strontium carbide and none was found. No problems of sticking of the SrO to the graphite die and punch material were encountered. The only need for a platinum liner is to provide protection from moisture when pellets are fabricated in air.

When pellets are formed by hot-pressing in an inert atmosphere (e.g., argon), small bubbles of the gas at the pressing pressure can be trapped in the pellet. The gas may subsequently diffuse into the void volume and cause an increase in the pressure inside the capsule. With vacuum hot-pressing, this possibility is avoided, and the pellets have a higher density.

Source Encapsulation and Testing (3)

The final step in the preparation of a heat source is to encapsulate the pellets in a suitable metal to hold the pellets in the desired location and to prevent absolutely the spread of radioactive material to the environment. The resulting capsules must be leak free, thermally and structurally stable, and capable of delivering the designed quantity of heat to the generator elements. They also must be resistant to chemical attack by the radioactive fuel and by the environments encountered during source fabrication and normal use, and in credible accidents after source fabrication.

Source fabrication studies at ORNL include consideration of the heat flow and the temperature distribution within the source. The designers of a generator generally require that a specified heat flux be delivered at a given temperature. These requirements must be met without creating excessive temperature anywhere in the source. High temperature reduces the strength of structural materials and increases corrosion rates. It can also cause melting or movement of the radioactive fuel by volatilization. Extremely high temperatures could occur in heat sources of poor design.

Large temperature drops may develop at interfaces between layers of encapsulating material and at the interface between the fuel and the capsule. The number of interfaces should be minimized, and calculations must show that the maximum possible temperature is not excessive.

Large temperature differences can exist between the surface and the interior of the radioactive fuel (with or without a diluent or matrix material) in heat sources. These gradients are created by the flow of heat, generated throughout the radioactive material, to the surface. Very high internal temperatures can result.

At the present state of generator development, the maximum temperature designated for the surface of the strontium titanate capsules is <1000°C. In SNAP-7 generators it is ~500°C. The maximum internal temperature can be lowered by the configuration of the capsule, by dilution with a good conductor (cermets), or by the introduction of metallic laminars into the $SrTiO_3$.

Welding of ^{90}Sr Containers[42] (4)

Inert-Gas, Tungsten-Arc Welding (5)

The primary fuel container for present-day ^{90}Sr sources is a Hastelloy alloy C capsule, welded by the inert-gas tungsten-arc process. The main reasons for the choice of Hastelloy alloy C as the primary container are its excellent seawater corrosion resistance and satisfactory weldability. However, in one case, a source prepared for a Si-Ge thermoelectric converter was encapsulated in a TZM (99% Mo, 0.5% Ti, 0.1% Zr) inner capsule and Hastelloy X outer container. Other than for the common choice of Hastelloy alloy C as an encapsulating material, there has been no standardization in capsule-weld design. The joint design and the weld penetration requirements have been set largely by the particular application rather than by limitations in source fabrication technology.

Since ^{90}Sr is not an alpha-emitter, no gas builds up in the capsule and a full-penetration, pressure-vessel type of weld is not generally required. Thus, the characteristic of $^{90}SrTiO_3$ containers has been a partial penetration weld produced by the inert-gas tungsten-arc process. In most cases the weld-joint design has been some modification of the edge-type of "trepanned" design (Fig. 7). This design is employed for several reasons. First, it is a relatively low-restraint joint which minimizes any tendency toward cracking due to shrinkage as the weld cools. This is particularly important if the cap and capsule body are fairly massive. In this case, a partial penetration weld in a plain butt-type joint would almost invariably crack due to the restraining effect of the relatively cool and therefore strong material surrounding the weak weld metal

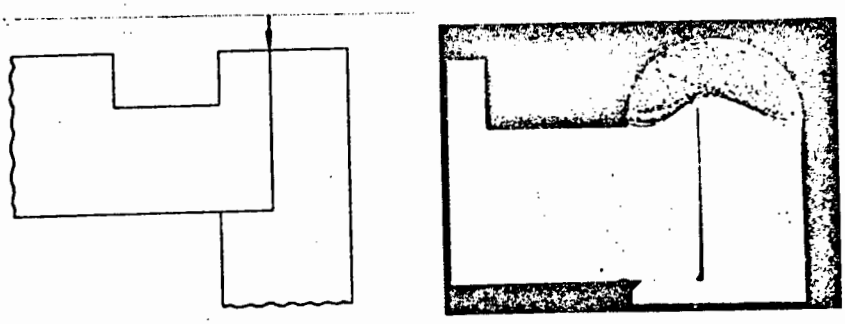

Fig. 7. Edge-type weld joint.

as it attempts to contract during cooling. This tendency is aggravated by the presence of the unwelded portion of the joint which acts as a built-in crack starter at the root of the weld.

The second reason for use of this joint design is that the shape of the weld bead can be observed easily. From this, the experienced welder can judge the amount of weld penetration being obtained, which in turn allows him to control the process during the operation.

The third reason for preference of the edge-type weld joint design is that no filler-metal is required. Compared with a flat butt-type joint, the edge-type joint can be thought of as providing its own filler metal. Open groove-type joints which require filler metal are not generally desirable for this application because the added complexity of the wire feeding equipment and wire handling adds to the difficulty of welding in a hot-cell and requires additional space. The chief reason for considering such a weld would be the need for additional weld metal penetration. However, if a weld of great depth is to be obtained by one of these methods, the weld must also be quite wide. Thus a tremendous amount of weld metal would be required on a comparatively small weldment (the capsule) and the result would likely be unacceptable distortion.

When the welding gas must be of known composition, purity, and pressure, a closed-chamber welder is used, which has provisions for evacuating the system, introducing the gas, measuring the temperature and pressure, remotely positioning the electrode, viewing the welding operations, and cooling the source. (A typical assembly is shown in Fig. 8.)

If the welding atmosphere need not be closely controlled, open tungsten—inert-gas (TIG) welding can be used.

Most remote welding techniques employ a fixed electrode with the source being rotated in a chuck. Sources with very low radiation and many alpha emitters can be welded with a hand-held torch in a glove box.

In welding these sources by the conventional inert-gas tungsten-arc process, it has been found useful to have the welder maintain complete control over the welding current. This is very desirable if, for some reason, an inaccurate estimate was made of the preheating effect of the fuel pellets. However, as greater assurances of weld penetration and overall quality are required because of a developed welding procedure which adequately takes

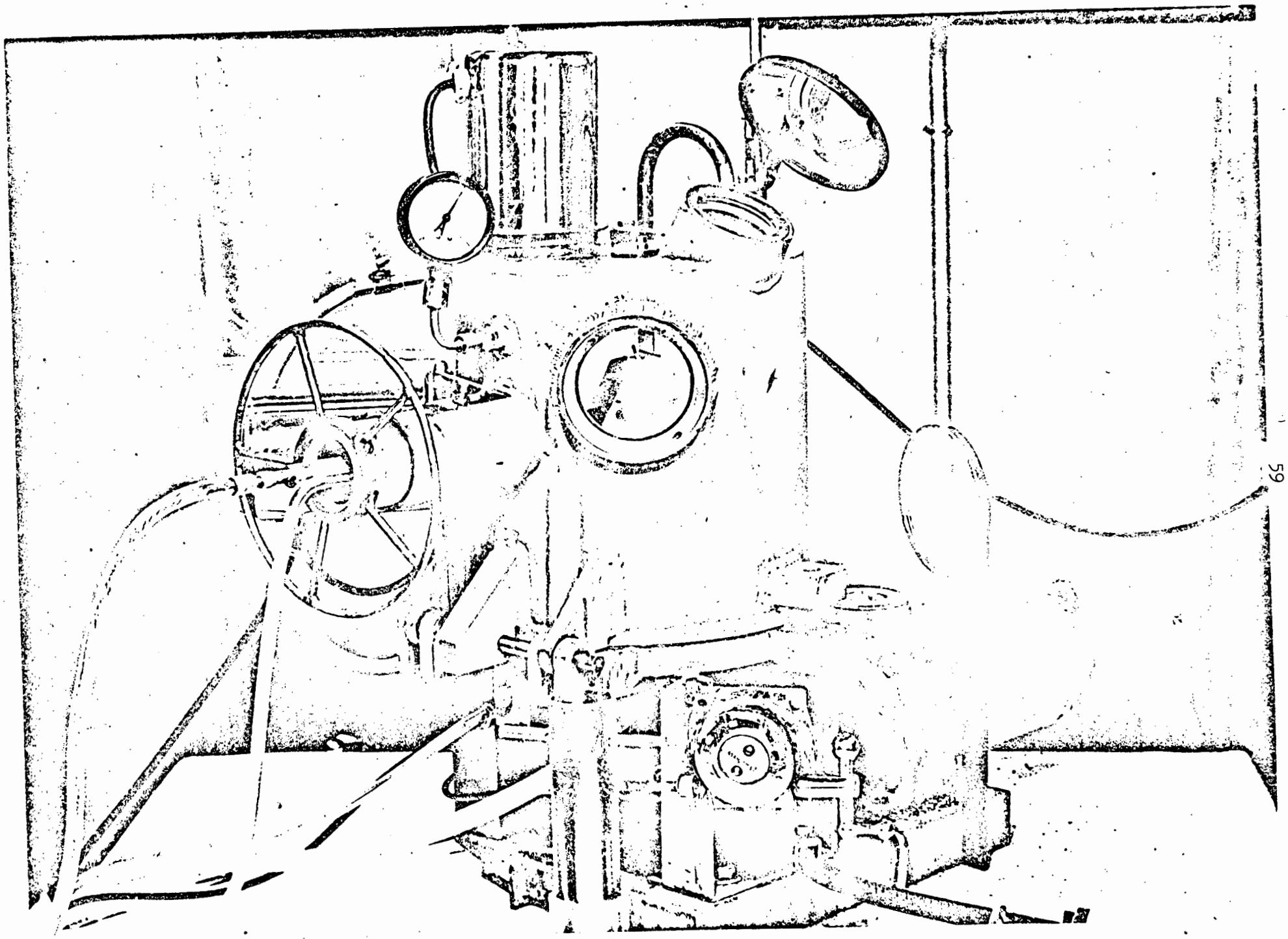

Fig. 8. Closed remote welding cell.

into account the effect of capsule preheat, operator "control" can become an uncontrolled variable. Thus, the trend is toward a welding procedure developed and carried out semiautomatically on a program-controlled welding power supply. By this method, a greater assurance of weld quality can be obtained.

In addition to the leak-testing procedures, other inspection procedures are used to better assure the quality of the welded capsule. These include the inspection of "quality assurance samples," one of which is welded immediately prior to the fueled capsule or capsules and another immediately after. These sample capsule welds are normally of the same joint configuration as the actual capsule, but do not always mock up the fueled capsule completely. For instance, the sample may not be of full height nor be completely machined.

The examination of these samples usually includes dye or fluorescent penetrant inspection of the weld area for cracks or pits, and a leak test. They are subsequently sectioned for metallographic examination of the welds. This is done to verify the weld penetration and quality at either two sections of weld 180° apart or four sections 90° short. This procedure can give reasonable assurance of the fueled capsule weld quality if the sample welding adequately mocks up the fueled capsule.

Electron-Beam Welding (5)

If welds are needed with penetration significantly greater than that which can be obtained by the techniques described above, electron-beam welding is adaptable to hot-cell use. Electron-beam welding is preferred over adding filler wire to conventional welds because of the drawbacks cited above for filler-wire additions and because the electron-beam process is very amenable to remote operations. Since the beam can be manipulated electromagnetically, no mechanical devices are necessary. Figure 9 is a photograph of the electron-beam welding equipment; the chamber, vacuum system, and electron-beam gun (left side of picture) would be positioned in-cell and the control console and power supply would be positioned out-of-cell. A typical weld on a Hastelloy alloy C capsule is shown in Fig. 10 joining a 0.300-in.-thick cap to a 0.250-in.-thick walled capsule. The depth and continuity of the electron beam weld are inspected by a pulse-echo ultrasonic method. The method shows defects in the weld of the order of the size of the reflected sound wave length.

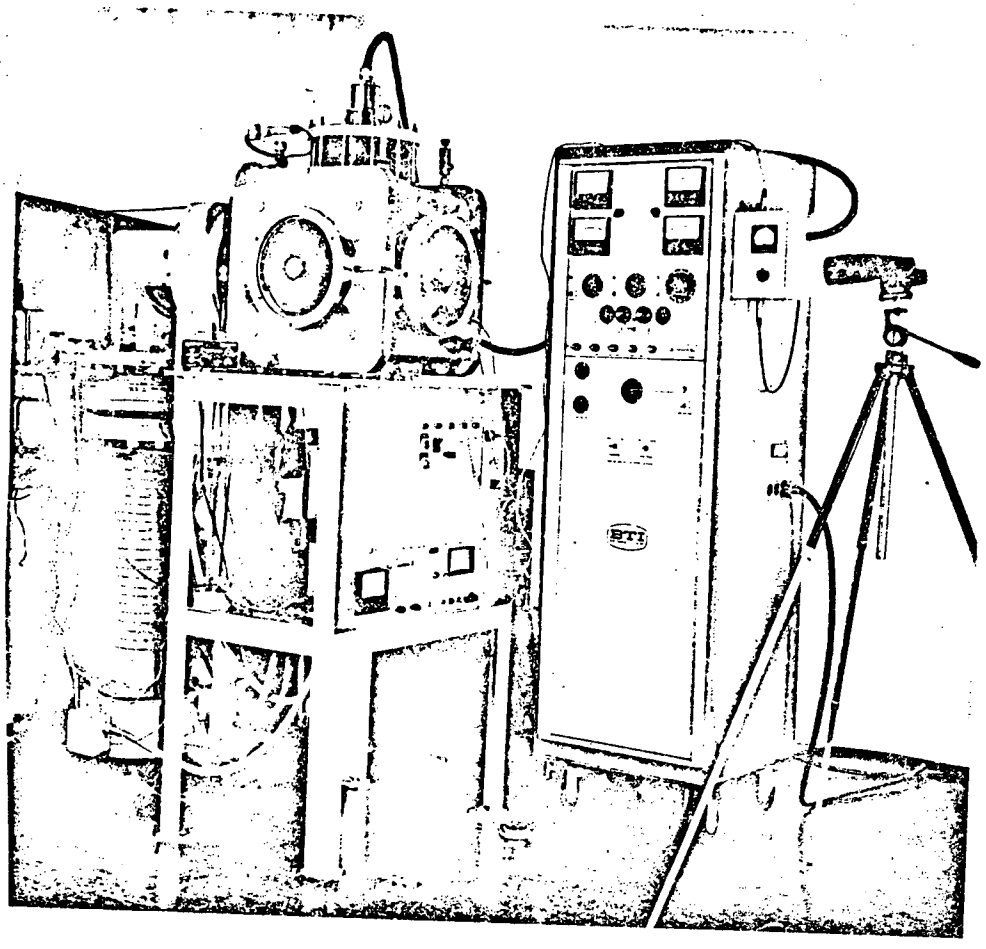

Fig. 9. Electron-beam welding equipment.

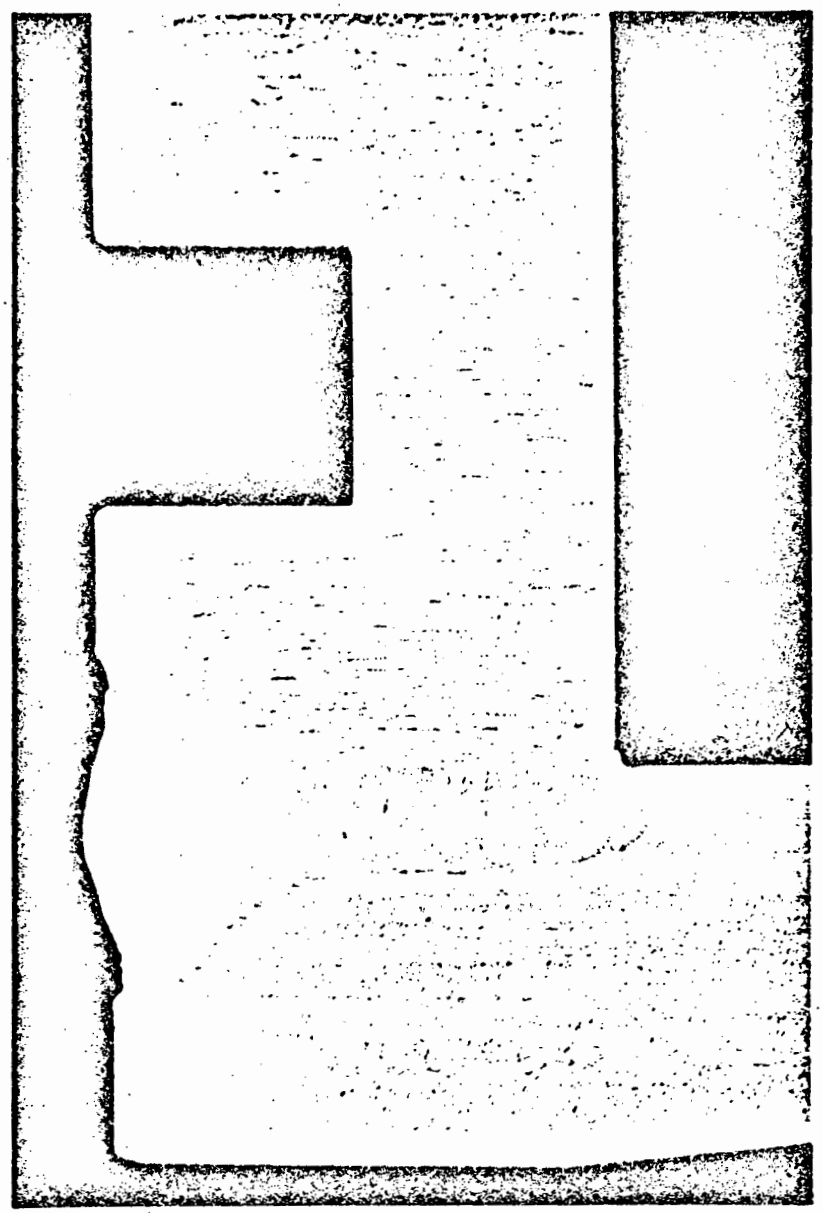

Fig. 10. Electron-beam weld.

Leak Testing (4)

Radioactive materials for use as radiation or heat sources must be encapsulated in a manner which will prevent the release of radioactivity during normal operations or under potential accident conditions. Most sources are encapsulated in welded metal containers and an important requirement is a demonstration that the welded closure is free from significant leaks. Methods of leak testing at FPDL are usually limited to those procedures which can be performed by remote means using manipulator-operated equipment. These methods involve immersion in some type of liquid; however, in cases where immersion methods are unsuitable because the source has a high thermal output or the encapsulating method is incompatible with the test liquid, a ^{85}Kr leak-test procedure is used.[43]

Examination of Used Sources (3)

The SNAP-7A generator fueled with $^{90}SrTiO_3$ was received in 1967, after 5-1/2 years of service, for defueling and inspection from the U.S. Coast Guard Station at Curtis Bay, Maryland, where it had been in operation since December, 1961, in a navigational buoy.[44] The outer case was unchanged except for a thin film of rust deposited evenly over the surface. Radiation readings of 20 mr/hr beta-gamma were measured at 5 in. from the top of the shielding case. The maximum power output measured was 4.2 W(e) as of April 20, 1967 [original design, 10 W(e)] The internal pressure of the generator as determined during periodic servicing was 18.5 psia in April, 1967, compared with 15.9 psia in March, 1964. Two samples of the generator fill gas were analyzed by mass spectrometry. The results of the analysis are given in Table 8.

Table 8. MASS SPECTROMETRIC ANALYSIS OF SNAP-7A GENERATOR FILL GAS

Compound	Amount, vol %	
	Sample 1	Sample 2
Hydrogen	0.04	0.02
Helium	74.5	75.3
Methane	0.14	0.01
Water	1.45	1.17
Hydrocarbons	<0.01	<0.02
Nitrogen and carbon monoxide	0.51	0.42
Oxygen	0.28	0.16
Argon	23.1	22.9
Carbon dioxide	<0.004	0.02

The weld on the generator casing cover was ground off, and the generator casing was separated from the biological shield, which was a large uranium cup completely encased in 1/4-in.-thick Hastelloy alloy C plate. The generator with the casing was lifted out of the shield and examined. There was no visible evidence that the Hastelloy alloy C generator casing had been amalgamated by the mercury heat-transfer medium in which the casing had floated for 5 years.

The mercury was removed from inside the biological shield and the Hastelloy alloy C shield liner was examined visually. There was no evidence of amalgamation.

The generator was defueled in one of the FPDL cells on April 25, 1967, and the fuel capsules were inspected. The insulation block was found to be broken, but no other physical damage to the generator was noted. No radioactive contamination was detected during the removal of the top plate. The maximum radiation reading at the top of the biological shield was 750 mr/hr. When the defueled generator was removed from the cell, a smear test of the outside lip read 1200 d/min, and all inside smears read <500 d/min. No ^{90}Sr was detected on any of the smears.

A core section of the biological shield was examined microscopically. It was found that the solder (50% Pb - 50% Sn) which had been used to bond the uranium and Hastelloy alloy C to form a heat-transfer path had only ~1-mil penetration on the side exposed to mercury and on the side exposed to the marine atmosphere. The solder was well bonded to the uranium, but there was no bond to the Hastelloy alloy C.

The nickel-plated uranium top plug of the biological shield was subjected to a standard AEC water-vapor corrosion test. The test consists of exposing the plated plug to saturated water vapor at 92.5°C for 20 hr. The test was performed five times for a total exposure of 100 hr. There was no evidence of corrosion or penetration of the nickel plate.

Each SNAP-7A fuel capsule contained six $^{90}SrTiO_3$ pellets and a number of Hastelloy alloy C spacers encapsulated in a welded Hastelloy alloy C capsule. The capsules were essentially identical in fuel content and arrangement. All the $^{90}SrTiO_3$ used in these sources was prepared during August, 1961, from the same $^{90}Sr(NO_3)_2$ feed material. Portions of three batches of $^{90}SrTiO_3$ with power concentrations of 0.231, 0.233, and 0.219 W/g were used. The calculated compositions of these fuel batches, based on the original feed analysis and decay to August, 1967, are given in Table 9. All the pellets used in the SNAP-7A sources were made by the cold-pressing and sintering method. Two $^{90}SrTiO_3$ batches which were deficient in titanium dioxide yielded pellets with an average power density of 0.73 W/cm^3; the 7% excess TiO_2 material yielded pellets with an average power density of 0.92 W/cm^3. All pellets were intact when loaded into the capsules.

Capsule Inspection (4)

Each of the four capsules was removed from the generator and given a smear test; no significant contamination was detected. All the capsules appeared to be in excellent condition; all were discolored to a dull grey. No defects in the weld areas could be detected by visual inspection. The

Table 9. CALCULATED COMPOSITION OF $^{90}SrTiO_3$ FUEL

Batch No.	Constituent, wt %						Power concentration, W/g	Ratio	
	Sr	Ca	Ba	Zr	Ti	O		$SrO:TiO_2$	$^{90}Sr:Sr$
17	38.1	2.9	0.2	6.0	26.2	26.6	0.199	0.95	0.47
18	38.5	2.9	0.2	6.0	25.9	26.5	0.201	0.93	0.47
19	36.1	2.7	0.2	5.7	27.9	27.4	0.189	1.07	0.47

diameter of the capsules was measured by passing them through 1.900 in. (original 1.872 in.) ID ring gages (1 and 4 in. long). The maximum height measured 5.21 in. (original 5.198 in.).

Leak Tests (4)

The capsules were individually leak tested by the hot-water air-bubble method; no leaks were detected. Two capsules at a time were leak tested with ^{85}Kr. The ^{85}Kr leak tests revealed no leaks (limit of detection, 1×10^{-7} cm^3/sec). The capsules originally had been welded in helium at 30 psig.

Heat Output (4)

The water-jacketed calorimeter was used to determine the heat outputs of the four capsules. The calculated heat contents (based on original loading data and corrected for decay from September, 1961) are compared below with those experimentally determined (on April 27, 1967):

Calculated heat output, W	Experimental heat output, W
54.9	56.6
54.6	56.6
55.0	56.7
54.8	56.6
219.3	226.5

The 3% difference in total heat output is probably due to overcorrection for ^{89}Sr contribution.

Inside Capsule and Pellet Examination (4)

Figure 11 shows the unopened capsules with the weld made in the hot cell.

Each capsule was opened by cutting through the wall at a point 1 cm below the end welded in the hot cell. The capsule was inverted and the capsule body was lifted off to expose the spacers and the fuel. Spacers and pellets were marked for identification as they were removed from the capsule.

After the pellets and spacers were removed, the capsules were brushed to remove any loose material. A 2-cm-high ring section was cut from the center of the capsule body. The other (shop) weld was cut off the capsule 1 cm from the end. The two weld sections, center section, and selected spacers from each capsule were transferred to the High Radiation Level Examination Laboratory (HRLEL) for metallurgical inspection.

There was no visible evidence of mechanical damage or chemical attack on the inside capsule surfaces or on the spacers. The fuel pellets and spacers were easily removed from the capsules. No residual fuel could be seen on the disassembled capsule parts. The maximum radiation reading on the package, with specimens shielded only by the thin metal walls of the package, was 300 mr/hr; this reading indicates that relatively little ^{90}Sr was retained in the specimens.

Of the 24 pellets (Fig. 12), 15 were completely intact, 7 were cracked across the diameter, 1 was slightly chipped, and 1 was broken into several pieces. One half of the broken pellet was intact and the other half was broken up (this pellet had initially cracked diametrically as had the 7 other pellets). There was no detectable change in the color of the pellets.

No significant dimensional changes in the pellets could be noted. The total weight of fuel material recovered was 1127 g, of which 1123 g was as pellets (or individual pieces) and 4 g as loose powder as compared with 1124 g original loading.

Metallurgical Examination of Capsules (4)

Visual examination of the four disassembled SNAP-7A capsules (with the aid of a remote stereomicroscope) disclosed no evidence of gross incompatibility

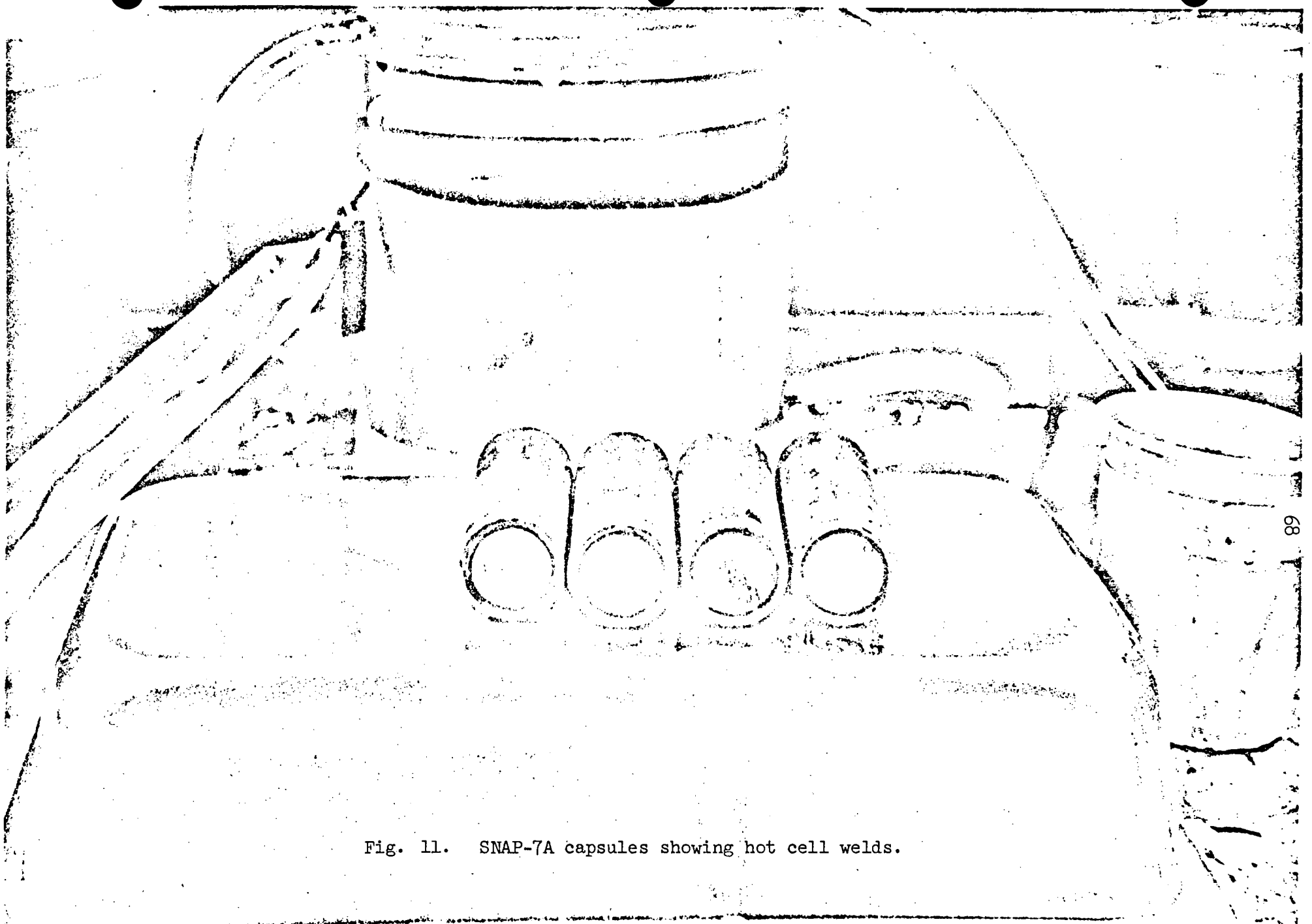

Fig. 11. SNAP-7A capsules showing hot cell welds.

Fig. 12. SNAP-7A Fuel Capsules and Pellets After Opening.

or weld defects.

The components of capsule No. 4 were selected for metallographic examination, which included a typical section through the bottom and upper closure welds, as well as a section taken through the wall of the capsule at about midlength, and through several spacers that had been placed between the $^{90}SrTiO_3$ pellets.

Examination of the closure weld revealed a minimum penetration of 0.085 in. A minimum penetration of 0.180 in. was measured on the bottom weld and there was no evidence of any microstructural defects.

Metallographic examination of the capsule wall disclosed no evidence of incompatibility; the inner and outer surface regions appeared to be identical. Examination of the spacers yielded similar results.

Summary (4)

There was no serious deterioration of these sources during their 5-1/2-year life. The distribution of the broken pellets according to fuel batch in interesting: 6 of the 9 high-density, titanate-excess pellets broke, while only 2 of the 15 low-density, titanate-deficient pellets broke (neglecting the pellet that was only chipped). Similar effects have been noted previously both with cold-pressed, sintered pellets and, more markedly, with hot-pressed pellets.

PHYSICAL AND CHEMICAL PROPERTIES[11]

Property[a]	Sr metal	$SrTiO_3$	SrO	SrF_2	Sr_2TiO_4
Specific power					
100% Sr (55%)^{90}Sr					
W/g	0.513	0.247	0.435	0.360	0.315
Ci/g	76.5	36.8	64.8	53.7	47.0
95% Sr & 5% Ca Mg, Ba					
W/g	0.487	0.235	0.411	0.336	0.294
Ci/g	72.7	34.1	61.2	50.0	43.8
Density, g/cm^3					
100% Sr (55%)^{90}Sr	2.6	5.11	4.975	4.29	4.99
95% Sr & 5% Ca,Mg,Ba	2.5	5.03	4.63	4.20	4.93
Power density, W/cm^3					
Theoretical	1.33	1.26	2.17	1.54	1.57
Actual or estimated	-	1.0	1.6	(1.4)[b]	(1.4)[b]
MP, °C	772	2040	2457	1463	1860
Thermal conductivity at 500°C, cal/cm·sec·°C x 10^3	250	9.2	5.5	4.2	7.6
Specific heat (500°C), cal/g·°C	0.0719 (at 25°C)	0.157	0.124	0.167	0.142
Coefficient of thermal expansion/°C x 10^5	2.0	1.21[c]	1.13[c]	1.63 (at 25°C) 2.44 (at 30°C)	1.17[c]
Solubility in H_2O, m/l x 10^4	Reacts vigorously			9	1.7

Leach Rate

SrO: 1.49 g/cm^2·day (H_2O at 4.4 cm/min)

$SrTiO_3$: $\ln R = -0.5235 \ln \underline{t} - 2.5987$

R = leach rate, mg/cm^2·day

$\underline{t}$ = time days

a) The values in the full report are referenced; b) 95% ^{90}Sr, 90% theoretical density; c) 0-1400°C.

for

Biological Tolerances ^{90}Sr

Maximum Permissible Body Burdens and Maximum Permissible Concentrations for Radionuclides in Air and in Water for Occupational Exposure

Organ of reference (critical organ underscored)		Max. permissible burden in total body, q(μCi)	Maximum permissible concentrations, μCi/cm³ For 40-hr week Water	For 40-hr week Air	For 168-hr week Water	For 168-hr week Air
(Sol)	Bone	2	4×10^{-6}	3×10^{-10}	10^{-6}	10^{-10}
	Total Body	20	10^{-5}	9×10^{-10}	4×10^{-6}	3×10^{-10}
	GI (LLI)*		10^{-3}	3×10^{-7}	5×10^{-4}	10^{-7}
(Insol)	Lung			5×10^{-9}		2×10^{-9}
	GI (LLI)*		10^{-3}	2×10^{-7}	4×10^{-4}	6×10^{-8}

*Abbreviations GI and LLI refer to the gastrointestinal tract and lower large intestine, respectively.

COMPATIBILITIES OF INACTIVE STRONTIUM COMPOUND WITH CONTAINER MATERIALS

Source material and exposure	Container material								
	Superalloys				Refractory metals				
	Hastelloy X	Haynes 25	Ni-o-nel	N-155	Mo	Nb	Ta	W	TZM
Strontium metal (Sr)									
1000°C, 1000 hr	SR	NR	SR	MR	NR		SR	NR	NR
1000°C, 5000 hr		MR		MR			SR	NR	
1000°C, 10,000 hr		MR	MR	MR	NR		SR	SR	
Strontium oxide (SrO)									
1000°C, 1000 hr	SR		SR	SR	NR	NR	SR	SR	
1850°C, 168 hr					SR	MR	SR	SR	
Strontium-9% beryllium oxide (SrO-9% BeO)									
1000°C, 1000 hr		MR	MR	SR	NR			NR	NR
Strontium fluoride (SrF_2)									
1000°C, 1000 hr	SR	SR	SR	SR	NR		SR	SR	
Strontium disilicide ($SrSi_2$)									
1000°C, 168 hr	DR	DR	DR	DR	DR		DR	DR	DR
Strontium titanate ($SrTiO_3$)									
1000°C, 1000 hr	SR	SR	SR	SR	NR		NR	NR	NR
1850°C, 1000 hr					NR	SR	SR	NR	MR

Legend: NR – Negligible or no reaction (compatible) SR – Slight reaction
DR – Destructive reaction (incompatible) MR – Major reaction

A number of reactions were dependent on time and temperature; for example, Haynes alloy No. 25 with strontium metal showed no attack at 1000°C up to 1000 hr but fell into the major reaction classification after 5000 and 10,000 hr at 1000°C. This indicates that Haynes alloy No. 25 should probably not be considered for use with strontium metal at temperatures >1000°C and times >5000 hr.

After exposure of 2036 hr at 925°C to inactive liquid strontium metal, it was found that molybdenum and stainless steel 321 showed good compatibility with liquid strontium metal; that wrought iron and Haynes alloy No. 25 were worthy of further study; and that Hastelloy C, Hastelloy alloy N, Hastelloy alloy X, and titanium had dissolved and were incompatible with strontium metal.

References

1. W. R. Corliss and D. G. Harvey, Radioisotope Power Generation, Prentice-Hall, Inc., Englewood Cliffs, N. J., 1964.
2. J. E. Carden, International Study of Terrestrial Applications of Radioisotopic Power Sources, Isotop. Radiat. Technol., 4(2): 172-82 (Winter 1966-1967).
3. Martin Company, Nuclear Division, Strontium-90 Power Project, Final Summary Report, USAEC Report MND-SR-1676, 1960.
4. C. L. Ottinger, Oak Ridge National Laboratory, Private Communication, 1967.
5. P. Zahn, Development of a Radioisotope Thermoelectric Power Generator, in Isotopic Power Generators, Proc. Int. Symp., Harwell, Berkshire, England, 1966, pp. 435-50, European Nuclear Energy Agency, 1967.
6. E. E. Fowler, Radioisotopes and Radiation Developments in the USA - 1967, Isotop. Radiat. Technol., 5(3): 177-8 (Spring 1968).
7. The U.S. Radioisotope and Radiation Processing Industries - 1968, Isotop. Radiat. Technol., 6(3): 233-34 (Spring 1969).
8. U. S. Naval Nuclear Power Unit, Quarterly Reports for Radioisotope Power Devices of the U. S. Navy, Vol. 1, Nos. 1,2,3,4, 1967 and Vol. 2, Nos. 1,2,3,4, 1968.
9. R. E. Tomlinson, B. F. Judson, and L. L. Zahn, Large-Scale Fission Product Recovery, Proc. U. N. Intern. Conf. Peaceful Uses At. Energy, 3rd, Geneva, Vol. 10, pp. 544-50, United Nations, New York, 1965.
10. Hanford Atomic Products Operation, Hot Semiworks Strontium-90 Recovery Program, USAEC Report HW-72666, General Electric Co., Hanford Atomic Products Operation, 1963.

11. S. J. Rimshaw and E. E. Ketchen, Strontium-90 Data Sheets, USAEC Report ORNL-4358, Oak Ridge National Laboratory, 1969.

12. L. A. Bray and H. H. Van Tuyl, Laboratory Development of a Carrier-Precipitation Process for the Recovery of Strontium from Purex Wastes, USAEC Report HW-69534, General Electric Co., Hanford Atomic Products Operation, 1961.

13. R. E. Burns, R. L. Moore, A. M. Platt, and W. H. Swift, Recovery and Purification of Megacurie Quantities of Strontium-90, Chem. Eng. Prog., Symp. Ser., 60(47): 1-8 (1964).

14. G. L. Richardson, Recovery of Strontium from Purex Waste by Lead Sulfate Carrier Precipitation — Pilot Plant Studies, USAEC Report BNWL-4, Battelle-Northwest, 1965.

15. R. P. Wischow and D. E. Horner, Recovery of Strontium and Rare Earths from Purex Wastes by Solvent Extraction, USAEC Report ORNL-3204, Oak Ridge National Laboratory, 1962.

16. D. E. Horner, K. B. Brown, D. J. Crouse, and B. Weaver, Recovery of Fission Products from Waste Solutions by Solvent Extraction, USAEC Report ORNL-3518, Oak Ridge National Laboratory, 1963; also Nucl. Sci. Eng., 17(2): 234-46 (1963).

17. W. Schulz, J. E. Mendel, and G. L. Richardson, Solvent Extraction Recovery and Purification of Strontium-90, USAEC Report HW-SA-2396, General Electric Co., Hanford Atomic Products Operation, 1961; also Ind. Eng. Chem., Process Design Develop., 2: 134-40 (1963).

18. G. L. Richardson, Solvent Extraction of Strontium, Cerium, and Rare Earths with D2EHPA. Part 2. Pilot Plant Studies, USAEC Report HW-79762 Pt. 2, General Electric Co., Hanford Atomic Products Operation, 1964.

19. D. E. Horner, Review of Process Technology for Recovery and Purification of Fission Product Strontium-90 (in preparation).

20. Pacific Northwest Laboratory Division of Isotopes Development Programs Quarterly Report: February - April 1970, USAEC Report BNWL-1308-2, Battelle Memorial Institute, Pacific Northwest Laboratories, Richland, Washington 99352.

21. E. Lamb, H. E. Seagren, and E. E. Beauchamp, Fission Product Pilot Plant and Other Developments in the Radioisotope Program at the Oak Ridge National Laboratory, in Proc. Intern. Conf. Peaceful Uses At. Energy, 2nd Geneva, 1958, Vol. 20, pp. 38-43, United Nations, Geneva, 1958.

22. C. W. Smith, Strontium-90 Shipping Cask Design Criteria and Hazards Evaluation, USAEC Report HW-68081, General Electric Co., Hanford Atomic Products Operation (1961).

23. W. R. Kendall and D. W. McLenegan, Strontium-90 Shipping Cask and Protective Buffer, USAEC Report HW-68274, General Electric Co., Hanford Atomic Products Operation, 1961.

24. J. Cochran and G. Pierson, Quehanna Pilot Plant First Generation Process Operations, USAEC Report MND-3062-22, Martin Co., Nuclear Division, (1965).

25. J. C. Posey, Calorimetry for Measuring Radioactivity, Isotop. Radiat. Technol., 1(1): 92-96 (1963).

26. J. C. Posey, T. A. Butler, and P. S. Baker, "Hot-Cell Calorimetry for Routine Determination of Thermal Power Generated by Kilocurie Sources," in Proceedings of the Tenth Conference on Hot Laboratories, Washington, D. C., November 26-28, 1962, pp. 263-68, American Nuclear Society, Chicago, 1962.

27. W. D. Box and J. C. Posey, Recent Advances in Radioisotope Process Calorimeters, Trans. Amer. Nucl. Soc., 10: 51-2 (1967).

28. H. Kubota and R. F. Apple, "Dissolution of Irradiated High-Fired Refractory Nuclear Materials," in Proceedings of the Sixth Conference on Analytical Chemistry in Nuclear Reactor Technology," Gatlinburg, Tenn., 1962, pp. 473-80, USAEC Report TID-7655, 1963.

29. ORNL Master Analytical Manual, USAEC Report TID-7015 with 9 supplements, Oak Ridge National Laboratory (1953-1966).

(a) E. I. Wyatt, Gross Beta, No. 9-0733001 (Rev. 9-20-56).

(b) J. E. Morton, Strontium-89 and Strontium-90 in Aqueous Solution. Di 2(ethylhexyl)phosphoric acid (Ken) — Amsco Extraction Method, No. 9-0733804, Rev. (4-14-64) Suppl. 7.

(c) C. A. Pritchard, Other Alkali Metals in Cesium Compounds, Flame Spectrophotometric Standard Addition Method, No. 1-230009, Rev. (8-15-61), Suppl. 4.

(d) E. J. Spitzer and J. R. Sites, General Operating Conditions for Isotopic Mass Spectrometry of the Elements, No. 4-0001 (2-20-64) Suppl. 7.

(e) E. J. Spitzer and J. R. Sites, Strontium, Isotopic Mass Spectrometry, No. 4-0180 (2-20-64) Suppl. 7.

30. Book of ASTM Standards, various parts, American Society for Testing and Materials, Philadelphia, Pa.

(a) Measurement of Beta Particle Radioactivity of Industrial Water and Industrial Waste Water, ASTM Designation D-1890, Part 23.

(b) Analysis of Radioisotopes, ASTM Designation E-181-62 (Reapproved 1967), Part 30, pp. 481-91, 1968.

(c) Sampling and Sample Preparation Techniques in Spectrochemical Analysis, ASTM Designation E-311-67, Part 30, pp. 1043-6, 1968.

31. W. B. Mann and H. H. Seliger, Preparation, Maintenance, and Application of Standards of Radioactivity, NBS Circular 594, U. S. Government Printing Office, Washington, D. C. (1958).

32. G. D. O'Kelley, "Detection and Measurement of Nuclear Radiation," pp. 16-40, Nat. Acad. Sci. - Nat. Research Council Report NAS-NS-3105, Washington, D. C. 1962.

33. R. L. Heath, Scintillation Spectrometry. Gamma-ray Spectrum Catalog, USAEC Report IDO-16880-1, Phillips Petroleum Company, Atomic Energy Division (1964).

34. J. A. Dean, Flame Photometry, McGraw-Hill, New York, 1960.

35. C. E. Harvey, Semiquantitative Spectrochemistry, Applied Research Laboratories, Glendale, Calif., 1964.

36. J. K. MacKenzie and R. Shuttleworth, "A Phenomenological Theory of Sintering," Proc. Phys. Soc. (London) 62B: 833-52 (1949).

37. P. W. Clark, J. H. Cannon, and J. White, "Further Investigations on the Sintering of Oxides," Trans. Brit. Ceram. Soc. 52(1): 1-49 (1953).

38. E. B. Allison and P. Murray, A Fundamental Investigation of Sintering Phenomena, British Report AERE M/R 1099, Harwell, England, 1953.

39. C. Berglund, V. L. Hammond, and B. M. Johnson, The Densification and Encapsulation of Isotopic Fuels by High Energy Pneumatic Impaction (m) Final Report, USAEC Report BNWL-381, Battelle Northwest, 1967.

40. T. C. Quinby, E. E. Pierce, and R. E. McHenry, Hot Presses for Glove Box and Manipulator Cell Use, USAEC Report ORNL-TM-1900, Oak Ridge National Laboratory (1967); also T. C. Quinby and R. E. McHenry, A Hot Press for Radioisotope Source Development, Nucl. App. 2: 390-3 (Oct. 1966).

41. J. B. Moser, R. N. Blumenthal, and D. H. Whitmore, "Thermodynamic Study on Nonstoichiometric Rutile (TiO_{2-x})," J. Amer. Ceram. Soc. 48(7): 384 (1965).

42. R. G. Donnelly, private communication, Oak Ridge National Laboratory, 1967.

43. C. R. King, Vacuum Leak Testing of Radioactive Source Capsules, USAEC Report ORNL-3664, Oak Ridge National Laboratory (1965).

44. W. K. Nichols, Jr., and W. A. McDonald, Strontium 90-Fueled Thermo-

electric Generator Power Source for Five-Watt U.S. Coast Guard Light Buoy, Addendum I to MND-P-2720, USAEC Report MND-3043-1, Martin Co. Nuclear Division, (1964).

FLOW MEASUREMENTS WITH RADIOISOTOPES (2)

Robert H. Lafferty, Jr.

Supplementary Keywords: tracer; flow measurement; ionization of gas; industry; industry, electric; hydrology; isotope dilution; activation analysis; activable tracer; instrument; comparison; apparatus; bibliography; hydrogen-3; sodium-24; chromium-51; cobalt-60; bromine-82; krypton-85; iodine-131; iodine-132; xenon-133; gold-198.

Abstract. Methods of measuring flow with radioisotopes are reviewed. Various nonradioactive flow meters are reviewed in an introductory section to put the methods using isotopes in the proper perspective. The advantages, disadvantages, and relative costs of various methods are compared. Radioisotopes may be used to measure flows of liquids or gases in a variety of ways: as tracers; to ionize a gas and then measure the flow rate of the ions; or with various mechanical flow meters to indicate the movement of the flowing material. The precision and accuracy of flow measurements using radioisotope tracers is also discussed.

Author's note: In Isotopes and Radiation Technology 4(2): 93-108 (Winter 1966-1967) is an excellent review article by C. G. Clayton on the measurement of flows of liquids and gases using radioisotopes. The author of the present article acknowledges that he received considerable help from Clayton's article and other publications by Clayton and his associates at the UKAEA.

The measurement of flow of liquids, gases, and solids is a very important factor in industry, commerce, and in our everyday life. These measurements range from relatively simple small-scale applications, such as the water flow to our homes or the gasoline into our automobile or the measurement of the flow in a 36-in.-diameter, 1,500-mile-long petroleum pipe line. Obviously most of these measurements are made with permanently installed indicating or recording meters.

Measurement of flow with radioisotopes will probably never be competitive with conventional flow meters in most routine applications. However, under the following situations, a radioisotope technique for measuring flow is the preferred method:

(a) when precise flow rates are needed

(b) when an occasional measurement of the flow in a pipe is needed and no permanent flow meter is available (i.e., for research on a process)

(c) when calibration of a conventional, permanent meter is required.

This paper describes isotope methods for the measurement of flow of liquids, gases, solids, and slurries, with the primary emphasis on liquids and gases. It covers flow measurements in both closed conduits and open streams. The majority of radioisotope methods for flow measurement use the isotope as a tracer, but a few other nontracer techniques, such as gas ionization or use of the isotope in a mechanical device, are also discussed. The use of isotopes to follow the movement of sand in rivers and harbors and of ground water is not included. These subjects have been covered thoroughly in several recent conferences.[1,2]

Although flow measurements are frequently made in ventilation and leak-detection studies, such studies will not be discussed here since they also have recently been reviewed.[3,4]

Survey of Flow Measurement Techniques (3)

The use of radioisotopes is only one of a large number of techniques available for measuring flow. Most of the other techniques have been discussed in detail in standard works on measurement systems,[5,6] but the main methods are summarized here to put tracer and isotopic methods into the proper perspective.

To simplify this discussion, techniques of measurements are separated into 5 main types: (1) meters that measure the velocity of the fluid directly; (2) meters that measure the fluid flow by noting the pressure drop obtained when flow is constricted; (3) meters that measure the flow by observing the area required for a given flow to take place; (4) meters that are suitable only for open streams; and (5) tracer methods.

Direct Measurement of Velocity (4)

The most direct way to measure fluid flow is to use the moving liquid to actuate some type of measuring device. The simplest of these devices is a vane that hangs by a pivot from the top of a pipe and is immersed in the flowing liquid. The greater the fluid flow the greater the displacement of the vane from the perpendicular by the force of the flowing liquid. However, because of the obstruction the vane offers the stream, there will be an appreciable pressure drop across the meter.

To overcome the pressure drop of the fixed-vane meter, a number of vanes on a wheel can be substituted so that the flow causes the vane paddle wheel to rotate. With a device such as this, there is very little

pressure drop involved, and translating the motion of the wheel into flow rate is simpler than with a fixed vane.

For larger flow rates, a flat vane wheel will not be suitable, and the flat vanes are replaced by helical vanes or a turbine rotor with their axes parallel to the direction of flow. Such meters have low pressure drop and can measure very large flows. For the turbine-type rotor, the flow rate is frequently determined by placing a magnet in the rotor and measuring the alternating current generated in an external coil.

The magnetic flow meter is a rather special type of a velocity flow meter which requires that the liquid whose flow is being measured be a conductor of electricity. This meter uses the principle that the flowing liquid cut the lines of force of an electromagnet, thus generating an electric current; the electric current so generated is proportional to the flow rate. Such a meter will not measure very low flow rates. Faraday unsuccessfully attempted to use this principle with the Earth's magnetic field to measure the flow of the River Thames in London.

Pressure Differential Methods (4)

Probably the most common types of flow meters are those meters in which some type of constriction is placed in the line where the liquid is flowing and the resulting pressure drop is measured. The flow rate can be determined from the pressure drop by a suitable calibration. The flow may be constricted by an orifice plate, a Pitot-static tube, a Venturi tube, or a flow nozzle.

The oldest and most common form of pressure-differential device is the orifice plate flow meter. It has been estimated that 85% of all meters installed are of this type. Even the Romans of Caesar's time used

this device for controlling the amount of water delivered into the various channels of the water supply system and to householders.

Because of its simple form, the orifice plate is easy to manufacture accurately, and therefore it is cheaper in comparison with other devices involving pressure differentials. Its chief drawback is that it causes a higher pressure drop in the flowing liquid than any of the other devices, and it cannot be used when the pressure head causing the flow is already low.

The Pitot-static tube flow meter is an L-shaped tube that is inserted into the fluid flow with its open end facing into the stream of the fluid (Fig.1). The fluid impinging on the tube results in an increase in pressure in the Pitot tube that can be compared to the average pressure of the stream; from the pressure difference, the flow can be deduced. The Pitot tube actually measures the velocity of the fluid at a point, but by traversing the stream with the tube and measuring the velocity at several points, one can obtain the average velocity. From this and the cross-sectional area, the flow can be derived. The Pitot tube causes essentially no pressure drop in the flowing fluid but can only be used at fairly high flow velocities. It is usually used as a temporary device to determine the range of flows of a system prior to installation of a permanent metering system.

The Venturi tube (Fig. 2) consists of 5 parts: an inlet ring of the same diameter as the upstream pipe, with a side hole for measurement of the static pressure; an entrance cone which includes an angle of 21°, joined to the inlet by a smooth curve; a short cylindrical throat, fitted with a single hole to measure throat pressure and joined to the entrance cone by a smooth curve; an exit cone which includes an angle of 10° to 30°; and an

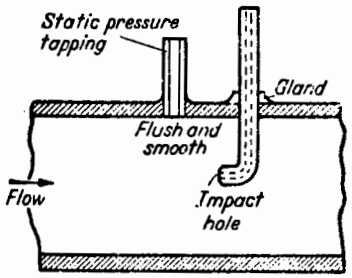

Fig. 1. Single hole Pitot tube.

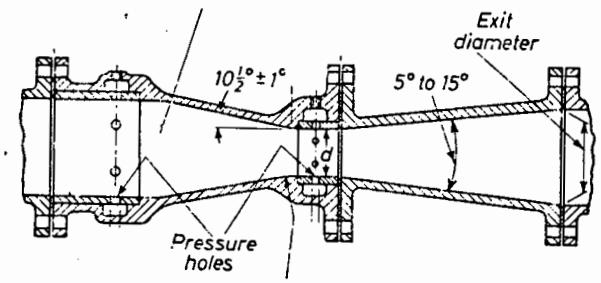

Fig. 2. Venturi tube.

outlet flange. The Venturi tube has a much lower pressure drop than orifice plates or nozzles; however, because of its length, it cannot always be installed in existing lines, and it is the most expensive of all the pressure-differential devices.

The flow nozzle is essentially a very short Venturi tube having a bell-shaped entrance cone and no exit cone. It is cheaper than a Venturi tube and may be installed in an existing line with very little trouble. Since the nozzle has no exit cone, it causes a high pressure drop, although not as high as that from an orifice plate.

Variable-Area Meters (4)

The most familiar form of a variable-area flow meter is the rotameter. In this type of flow meter, a float or bob is suspended in the flowing liquid and the flow is through a tapered tube with the wider opening at the top. As the fluid flow increases, the position of the bob rises since this will increase the area of the annular space open to flow. Rotameters are available for measuring a wide variety of flows of both liquid and gases.

A modification of this type of flow meter is the orifice and plug meter in which the gas flows through an orifice that has a tapered plug seated in it. In this case also, the higher the flow rate, the higher the plug will rise, thus opening a larger annular space to the flow.

Open-Channel Flow Meters (4)

The two most widely used forms of measuring open-channel flow are the weir and the Venturi flume.

The weir is one of the oldest flow meters known to man. It consists of a dam that is built across the open channel, and the water to be measured flows across the top. The depth of flow over the top of the dam is a measure of the flow rate. Weirs are usually classified by the shape of the channel through which the liquid flows and are usually rectangular or triangular.

The Venturi flume (Fig. 3) consists of a contraction in the cross-sectional area through which the liquid to be metered is flowing. A contraction of this description can be constructed in a channel with any cross-sectional form, and various types of contractions may be used to suit individual practical conditions. Thus, the plan of a Venturi flume is similar in appearance to a rectangular Venturi tube, with the top open. It has a gradual contraction to the narrowest or throat section and a gradual expansion to the full width of the channel. As in the case of the Venturi tube, the downstream expansion allows for head recovery.

By careful design of the flume, the actual instrument required to indicate the flow may be simplified. If the channel is designed in such a way that the depth in the exit channel at all rates of flow is less than a certain percentage of the depth in the entrance channel, the flume will function as a free-discharge outlet. Under these conditions, the upstream depth is independent of the downstream conditions, and the depth of water in the throat will maintain itself at a certain critical value at which the energy of the water is at the minimum, whatever the rate of flow. When this is so, the quantity of water flowing through the channel is a function of the upstream depth only.

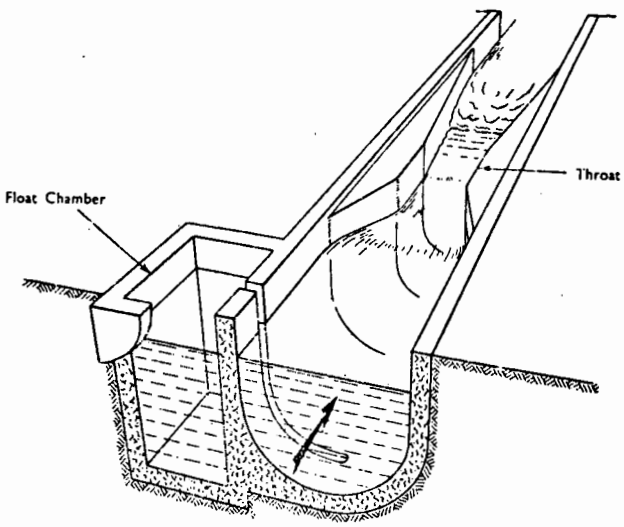

Fig. 3. Semicircular-type Venturi flume.

Tracer Methods (4)

Probably the first person to use a tracer method to determine flow was the caveman who threw a stick in the river to see if the river was flowing too fast to wade. Since this time, man has put many different substances in flowing channels to find out how fast they are moving.

The requirements for a good flow tracer are:

1. It should not be present in high or variable concentration in the stream.
2. It must be stable to dissolved substances or gases, to suspended solids, to light, and to materials forming the stream banks and bed.
3. The toxicity must be low.
4. It should be capable of accurate determination at low concentration.
5. Its solubility should be high.

Among the materials that have been used as tracers to measure flow are soluble salts of sodium, potassium, and lithium; dyes, particularly fluorescent ones; bacteria; and radioisotopes. Although radioisotopes are frequently thought of as being the only useful tracer for flow measurement, this is not so. In a recent bibliography[8] on measurement of flow by salt-dilution and salt-velocity techniques, only about 70 of over 200 references involved radioisotopes as the tracer. The salt-dilution method for flow measurement was originated[9] in 1863; the salt-velocity method was developed[10] in 1922; the first proposal[11] to use an isotope was made in 1922, although the isotopic method was not actually tested[12] until 1943.

The two basic methods of measuring flow of fluids with tracers are the salt-dilution method and the salt-velocity method. These two general methods are discussed next without reference to the tracers that might be used.

Salt-Dilution Method.[5] Fluid flow by the salt-dilution method may be determined in two basic ways. In the constant-rate injection method, a soluble tracer solution is injected into the flowing stream at a rate q and a concentration C_1. Downstream at a point where the tracer has been completely mixed, the concentration, C_2, of the tracer component in the stream is determined. The rate at which the tracer is injected is equal to the rate at which it passes the sampling point.

$$qC_1 + QC_0 = (Q + q)\ C_2 \tag{1}$$

where C_0 is the initial concentration of the tracer in the stream and Q is the flow rate. Thus

$$Q = \frac{C_1 - C_2}{C_2 - C_0}\ q \tag{2}$$

Usually $C_1 >> C_2$ and $C_2 >> C_0$ so Eq. 2 reduces to

$$Q = q\frac{C_1}{C_2} \tag{3}$$

If the flow is turbulent and complete mixing has resulted, this method is completely independent of conduit dimensions or any variation in these dimensions. Since only the concentration of the tracer at the sampling point is needed, the sample can be taken from a branch pipe.

The other method used to determine flow by the salt-dilution method is to suddenly inject a volume, V, of tracer into the stream as a cloud. Then downstream at a point where the tracer is completely mixed, a concentration-time curve is obtained for the entire cloud as it passes.

The flow can then be calculated from the relationship

$$Q = \frac{VC_1}{\int_0^\infty (C_2 - C_0)dt} \qquad (4)$$

where C_1, C_2, and C_0 have the same meanings as in Eqs. 1 to 3. The integral represents the total area under the time-concentration curve with the background subtracted and can be obtained from a graphical integration of a continuous record of time vs concentration.

There are several advantages of the sudden injection method over the constant-rate injection method:

1. It is more economical of equipment since no apparatus for continuous tracer injection is required.
2. It is less sensitive to sampling position provided that adequate mixing is obtained, since the requirement of operating in a region of constant concentration no longer applies.
3. By mixing samples removed during the transit period and analyzing a single composite sample, only one measurement is required.
4. Operation of the constant-rate injection method depends critically on removal of samples during the period of constant concentration. No such restriction applies to the sudden-injection method; only an approximate knowledge of the tracer distribution is required.

Salt-Velocity Method.[5] The basic principle of this method, sometimes referred to as "peak-to-peak timing," is simpler than any of the other tracer methods. A cloud of the tracer is suddenly injected into the flow, and then the time for the cloud to pass between two detectors downstream is measured. Allen,[10] in proposing the method, originally detected the passage of a salt cloud in the pipe at two locations by measuring the electrical conductivity of the solution.

The method has the main advantage that ususally simpler detection equipment can be used than that required for the salt-dilution method; however, its principal disadvantage is that it depends on an accurate knowledge of the cross-sectional area of the conduit.

Radioactive Tracer Measurements (3)

As was discussed in the last section, the use of chemicals to trace flow of streams is a technique that is well over 100 years old. One of the major drawbacks of this method is the extremely large amount of chemical that must be added to a stream so that it can be detected by chemical or physical methods. Because of this objection, Joly, in 1922, suggested[11] that a radioactive solution could be detected at much lower concentrations than other chemicals and its use should be considered in the salt-dilution methods. Joly calculated that 300 g of pitchblende dissolved in nitric acid would provide sufficient radium to be detected in measuring the flow rate of an average stream. He never tried his suggested method. In 1943, Hess tried the method with radium and found that it worked, although he found that he had to use more radium than Joly had calculated.

The first artificial radioisotope was used in 1946 when Karrer, Cowie, and Betz[13] used ^{24}Na, prepared with a cyclotron, with the salt-dilution method to measure condenser water flow in a power plant.

The special advantages of radioisotopes as tracer for the measurement of flow rate are

(1) high sensitivity of detection. Very small amounts can be detected in situ and can be accurately measured in the field or laboratory.

(2) Accurate measurement. Measurements are equally accurate in clear, turbid, polluted, or saline water—provided that elementary precautions are taken against losses by adsorption.

(3) Low background levels. The natural radioactivity of water is negligible for flow measurements involving gamma-active tracers.

(4) Easy measurement. Measurements can be made on existing equipment with a minimum of modification. Frequently the measurement can be made from outside the conduit or pipe.

(5) Low pressure drop. Since injection devices and measurement equipment are simple, essentially no pressure drop is induced in the flowing liquid.

The disadvantages of using radioisotope tracers include

(1) Health considerations. These would probably be analagous to toxic problems encountered with chemical tracers.

(2) Handling problems associated with gamma-active isotopes. These become serious only when making flow measurements at rates above 1000 ft^3/sec.

(3) Licensing. In the United States, a license to use isotopes may be needed from the USAEC.

(4) Necessity for discontinuous measurements. This is true of all salt-dilution and salt-velocity methods.

Radioisotopes can be used as tracers with any of the tracer methods mentioned in the previous section—i.e., constant-rate injection, sudden injection, or peak-to-peak timing. In addition to these methods, there is another method that is only usable with radioisotopes as tracers; this is the total-count[14] or total-sample method.[15]

Total-Count Method (4)

The total-count method* uses a sudden injection of the tracer, but instead of the tracer concentration being measured by evaluation of the integral $\int_0^{\infty} (C_2 - C_0)\, dt$ (see Eq. 4) only the total count measured by a detector downstream from the injection point is determined. The detector may be in the stream in the case of an open channel or on the edge in the case of a pipe. For any given amount of tracer, the number of counts recorded is inversely proportional to the flow rate, expressed mathematically as

$$Q = F/N \tag{5}$$

where Q is the flow rate, N is the number of counts recorded, and F is a proportionality constant which is characteristic of the isotope, the counter, and the geometrical relationship between the counter and the stream.

In practice, F is determined by measuring the number of counts obtained on the counter from a known concentration of the tracer under the same geometric conditions as those under which the flow measurements are made. Since reproducing the geometry of the counter and stream is difficult in making measurements on open streams, often it is more convenient to pump a sample into a bucket in which the counter is placed and then return the sample to the stream.

The total-count method has several advantages over other flow measuring methods.

(1) No equipment need be installed inside the piping or the flow system.

---

*The total-count method has been patented by the California Research Corporation.[16]

(2) In comparison to the salt-dilution method, much less isotope is needed to make a measurement.

(3) The specific activity of the tracer solution does not have to be known.

(4) An instantaneous reading is obtained and if the calibration factor, F, is known, the system can be arranged to measure flow rate directly.

The principal disadvantage is that the counting time is limited to the time required for the tracer to pass the detector, which also limits the statistical accuracy with which N can be determined.

Resumé of Radioisotope Tracer Methods (4)

Clayton and coworkers[17] have classified radioisotope tracer methods into the following system:

Constant-Rate Injection Method. This method is the same as the salt-dilution method in which a radioisotope is continuously injected in the flowing stream and then further downstream the concentration of the isotope is determined.

Sudden Injection Methods. In these methods the isotope is introduced rapidly into the flow as a wave and then the wave is determined at a point downstream. There are four different ways that the wave can be measured, each characterized by the method of measurement:

Continuous-Sample Method. Samples are withdrawn at regular intervals and counted. The counts for each sample are plotted against time and the concentration is determined by measuring the area under the curve.

Total Sample Method. A single sample is withdrawn over a long enough period of time to cover the passage of the tracer and then

the average concentration is determined by taking a sample from the large sample.

Total-Count Method. A counter is placed in the flow or on the edge of the stream and the flow is determined by the total counts registered on the counter.

Isotope-Velocity Method. This is the radioisotope equivalent of the salt-velocity method in which the flow is determined by measuring the time it takes the pulse to move between two counters. Use of this method requires a knowledge of the cross-sectional area of the conduit.

Clayton[18] has summarized the characteristics of the main methods of measuring flows in Table 1.

Table 1. A comparison of Methods of Flow Measurement

Method	Accuracy (%)	Operating Range	Comments
Current meters	±1-2	>2 ft/sec	Delicate. Requires calibration. Pipe diameter required. Continuous measurement for short time. No head loss. Proportional to velocity.
Pitot traverse	±2	>2 ft/sec	Tedious. Involves accurate traverse of pipe along a number of diameters. Diameter required.
Standard orifice plates	±1.5	No limit providing pressure difference can be monitored	Inexpensive. Clean fluids required. Large loss of head. Mostly used in smaller pipes (up to ~32-in. diameter — usually less). Continuous measurement.
Calibrated orifice plates	Up to calibration standard.		

Table 1 continued

Method	Accuracy (%)	Operating Range	Comments
Venturi flume	±1.5		Expensive, small loss of head. Can be used for "dirty" fluids. Continuous measurement.
Gibson method	±2	Determined by application	Pipe dimension along test section required. Involves emergency closing of pipe flow. Intermittent measurement.
Chemical dilution	±2	No limit	Intermittent measurement. No loss of head. Not dependent on cross-sectional area. Sufficient pipe length required to give complete mixing of an injected tracer. Not applicable to salt water.
Chemical velocity	±2	No limit	Intermittent measurement. No loss of head. Depends on knowing cross-section area. Sufficient pipe required for mixing. Not applicable to salt water.
Isotope dilution	±1.5	No limit	Same as for chemical dilution but much smaller injection volume required. Applicable to salt water.
Isotope velocity	<±1	No limit	Same as for chemical velocity but smaller injection volume required. Applicable to salt water.

Accuracy and Precision (3)

In the introduction it was mentioned that radioisotope tracer methods should be used when precise flow rates are needed or when a method is needed to calibrate another flow meter. This implies that radioisotope tracer methods are both precise and accurate. Clayton and coworkers have tested this assumption under a number of conditions and have found that it is true.

Closed Conduits (4)

The first test made by Clayton[19] and his coworkers was on the isotope dilution method. For this test they used a recirculating system at the National Engineering Laboratory, East Kilbride, Glasgow. This system has a 700-ft-long, 20-in.-diameter pipeline in which the flow can be varied from 1 to 20 ft^3/sec, and the flow can be diverted into a tank suspended from a weighbridge so that the mass flow rate can be measured with an overall accuracy of ±0.15%.

For the isotope dilution test, ^{24}Na was used as the tracer and was injected into the center of the pipe at a constant rate with a special pump that will be described in a later section. Samples were taken at the pipe axis and collected in 2.5-liter polyethylene bottles at 100 ft (60 diameters), 183 ft (110 diameters), and 366 ft (220 diameters) from the point of injection. For each test, 5 injections were made and 5 samples were obtained from each sampling point. Flow rates tested were between 5 and 18 ft^3/sec, and the results from the isotope dilution method were compared to the values obtained by weighing. Since it was found that mixing was not adequate at the 60-diameters sampling point, sampling at this point was discontinued in the later tests. The mean error of the results with samples taken at 110 diameters was 1.50%,

the standard deviation ±1.15% and the spread in the errors was from +0.55% to -2.26%. With samples taken at 220 diameters, the mean error was 1.56%, the standard deviation was ±1.68% and the spread was from +1.59% to -2.14%.

In a second test at the National Engineering Laboratory, Clayton[20] determined the accuracy of the isotope velocity method using a 20-in. pipe having a 180° bend in it. This loop was also designed so that the water flow could be measured absolutely by diverting the flow into a tank on a weighbridge. In this test, an injector (to be described in a later section) was used to give an instantaneous pulse of isotope into the center of the pipe. Sodium-24 was used as a tracer and in most of the experiments the two detectors were separated by 125 ft (75 diameters) and the first detector was 190 ft (115 diameters) from the point of injection. Clayton[20] reports that at low flow rates (5 to 7 ft^3/sec) the means of the three experiments were within 0.2% of the absolute flow rate, and that at higher flow rates (15 to 18 ft^3/sec), the means deviate by 0.8% from the absolute flow rate. These accuracies were achieved when the flow rate was measured by timing the peak from one detector to the other, and it did not matter whether the detectors were separated by the 180° bend or not. When experiments were made in which the flow rate was determined by measuring the time it took the peak to get from the injector to the first detector, the error rose to about 4%.

Clayton[21] made another series of tests using a 4-in.-diam pipe loop and a weigh tank for absolute calibration. In these tests at flow rates from 0.12 to 0.26 ft^3/sec, he found that the constant-rate-injection, total-sample, and isotope-velocity methods all showed accuracies well within ±0.5%. The accuracy of the total-count method was slightly inferior to this.

Schuster and Hansen[22,23] of the U.S. Bureau of Reclamation, in work sponsored by the USAEC Division of Isotopes Development, have measured flow rates of about 300 ft^3/sec by isotopic methods in 6- to 7-ft-diameter penstocks and have compared them to flow rates determined by an orifice flow meter. These workers used ^{82}Br and the isotope-velocity, continuous-sampling, isotope-dilution, and total-count methods. The percent average deviation between these isotope methods and the orifice flow meter, as well as the standard deviation of the isotope methods, are given in Table 2. In general the isotope methods deviated by 2% or less from the flow meter. The injections were made at four points on the pipe's circumference, either at the wall or 8 in. from the wall, in a device to be described in a later section. Samples in the continuous-sampling and isotope-dilution methods were taken either from four points on the circumference or from a single tube at 0.54 or 0.04 of the radius from the pipe wall.

Open Stream (4)

Fewer tests to determine the accuracy and precision of radioisotope methods for open stream flow measurement have been made than those described above for pipe flow. Smith and coworkers[24] at the UKAEA Wantage Research Laboratory used ^{24}Na and compared the flow measurement using this isotope in the continuous sample method with the flow rate measured with a weir. At flows up to 6 ft^3/sec they found that the limits of accuracy were between ±0.3% and ±0.6%.

Clayton and Smith[25] compared the isotope-dilution and continuous-sample techniques for measuring the flow rates of four streams with ^{24}Na and ^{82}Br as tracers and found that both methods were reproducible and differ systematically by 3.1%.

Table 2. Deviation between Isotope Methods and Orifice Flow Meter

Method	Velocity*			Continuous Sampling			Total Count		
Mixing Length, dia.	14	45	82	36.5	105.5	105.5	105.5	105.5	919
Sample Location				4 points	0.54R	0.04R	0.54R	0.04R	Turbine
Number of Measurements	8	17	8	7	8	8	7	7	7
Average Deviation, %	1.6	2.0	2.4	2.4	1.5	1.6	2.1	3.6	1.5
Standard Deviation,%	1.6	1.8	1.2	2.6	1.8	1.9	1.7	2.2	1.6

*In the velocity method the mixing length gives the distance to the first counter; the distance between the first and second counter was 22 diameters in all cases.

Hull[14,26,27] has compared results of flow measurements made with the total count method with measurements made with traditional flow meters and finds that the two methods are usually within about 5% of each other.

Choice of Radioactive Tracer (3)

In an earlier section, the general requirements for any tracer were reviewed: it should not be present in the stream being measured; it should be stable to other materials in the stream being measured; it should have low toxicity; it should be easy to determine accurately; and it should have high solubility. All of these requirements are involved in choosing a radioactive tracer, and the following additional factors must be considered: the radioactive half-life, the type and energy of emitted radiation, the maximum permissible level in drinking water (this is a special form of toxicity), and the availability and cost. Since radioisotope tracers are usually used in smaller concentrations than other chemical substances, the sorption of the isotope by other materials in a stream can cause trouble and should be observed carefully.

The isotopes that are most frequently used as tracers in measurement of liquid flow are ^{24}Na, ^{82}Br, ^{132}I, ^{131}I, ^{51}Cr, ^{198}Au, and ^{3}H. In gas-flow measurements, ^{85}Kr, ^{133}Xe, and ^{82}Br as methyl bromide are most frequently used. Tables 3 and 4 give the radioactive and radiotoxicity properties of these compounds.

Table 3. Isotopes Most Frequently Used as Tracer for Liquids[28,29]

Isotope	Half-Life	Decay Scheme β, MeV	Decay Scheme γ, MeV	MPC* μCi/cm³
^{24}Na	15 hr	1.39(100%)	1.37(100%) 2.75(100%) 0.51(99%)	2×10^{-3}
^{82}Br	35.4 hr	0.44(99%) Others	0.55(72%) 0.62(44%) 0.78(83%) and others up to 1.47(7%)	3×10^{-3}
^{131}I	8.06 days	0.61(90%) Others	0.36(82%) Others	2×10^{-5}
^{132}I	2.3 hr	0.72 to 2.12 Others	0.52(16%) 0.65-0.67(112%) 0.77(76%) Others	6×10^{-4}
^{51}Cr	27.8 days		0.32(10%) X-rays	0.02
^{198}Au	2.70 days	0.97(99%)	0.41(96%)	5×10^{-4}
^{3}H	12.3 years	0.018	-	0.03

*The MPC (maximum permissible concentration) is given for exposure for 168-hr week.

Table 4. Isotopes Most Frequently Used as Tracer for Gases[28,29]

Isotope	Half-Life	Decay Scheme β, MeV	Decay Scheme γ, MeV	MPC μCi/cm³
^{85}Kr	10.7 years	0.67(99%)	0.51(0.42%)	3×10^{-6}
^{133}Xe	5.3 days	0.34	0.081(36%)	3×10^{-6}
^{82}Br	See Table 3 above			4×10^{-7}

The choice of the best tracer for any application will usually involve a compromise of various factors. The pros and cons of the isotopes listed above and in Tables 3 and 4 are discussed below.

Sodium-24 (4)

The 2.75-MeV gamma emitted by sodium-24 makes it very easy to determine in the field by counting; however, when the isotope is injected into a stream or pipe, considerable shielding of the injector sample is required because of these hard gammas. Clayton and coworkers used this isotope successfully in pipe-flow measurements using both the isotope-dilution[19] and isotope-velocity[20] methods. In work with stream flows over long distances, they found that ^{24}Na was sorbed over a 2- to 5-hr period if inert NaCl was not added.

Bromine-82 (4)

The short half-life and high-energy-gamma emission (1.47 MeV) of this isotope makes it very useful for flow tests that can be run quickly. Schuster and Hansen[22,23] used it in most of their work with turbine penstock flows and Clayton[25] used it and compared it with ^{24}Na, ^{32}P, and ^{3}H in open-stream flow measurements. It can also be measured easily in the field.

Iodine-131 (4)

This isotope in the form of the iodide is reported as having uncertain sorption behavior at very low concentrations. However its half-life is extremely convenient for stream discharge measurements. It requires less shielding on injection into a stream or pipe than ^{24}Na and ^{82}Br.

Iodine-132 (4)

For very short experiments measuring flow, ^{132}I ($T_{\frac{1}{2}}$ = 2.3 hr) has been suggested by Clayton[25] and used by Smith and Clark.[30] This isotope is conveniently obtained in the field by elution

from ^{132}Te ($T_{\frac{1}{2}}$ = 78 hr) adsorbed on an alumina column. The short half-life of this isotope permits consecutive experiments without interference from previous injections.

Chromium-51 (4)

This isotope is frequently used as the ethylenediaminetetraacetic acid (EDTA) complex, a form of the isotope suggested by Lacy and de Laguna.[31] In a double-tracer experiment testing groundwater flow, Knutsson, Ljunggren, and Forsberg[32] showed that the flows of the EDTA-^{51}Cr complex and tritiated water (HTD) were identical. Heemstra, Watkins, and Armstrong,[33] on the other hand, showed that the EDTA-^{51}Cr complex was not a good tracer to use in studying the flow of brine through permeable sandstone.

Gold-198 (4)

The 0.41-MeV gamma ray from this isotope makes it particularly suitable for flow measurements of open streams by the total-count method. Hull[27] and Temblin and Peterka[34] have used this isotope in this way. It is usually used in the form of gold chloride. Temblin and Peterka[34] reported some evidence in their experiments that the gold was sorbed on the aquatic weed in the channel where they were measuring flow rates.

Tritium (Hydrogen-3) (4)

Hydrogen-3 in the form of HTO should be an ideal tracer for water because it is essentially the same as water and practically is not subject to sorption. Clayton and Smith[25] compared it with ^{24}Na, ^{82}Br, and ^{32}P in open-stream flow measurements and found that it was convenient to inject in the field because of the weak beta radiation; however, the chief drawback is that it cannot be determined in the field because the of weak beta radiation and must be taken to the laboratory. Knutsson, Ljunggren, and Forsberg[32] tested HTO and ^{51}Cr-EDTA together in a double-tracer experiment on the flow of groundwater and found that the movements of the two isotopes were identical. In this case they considered the tritium as the standard that was proving that ^{51}Cr-EDTA could be used.

The most serious objection to the use of tritium in streamflow measurements is its possible interference with the dating of groundwaters by cosmic-ray-produced tritium. This objection is not too serious because generally the hydraulic connection between rivers and groundwater systems is in the opposite direction, i.e., groundwater feeds the rivers and constitutes their base flow.

Activable Tracers (4)

In some instances it will not be convenient or possible to use a radioisotope as a tracer in the measurement of flow rates. This may be so, particularly if the stream in which the flow rate is being measured is used as a source of drinking water. In these cases it may be possible to use a stable isotope or compound and then determine the amount of the tracer that is present by activation analysis. In two recent articles, Greene reviewed this technique; in the first paper,[35] he dealt with general aspects of the technique and its use in medicine and pollution studies. The second article,[36] discusses uses in hydrology.

Two papers reviewed by Greene are particularly pertinent to flow measurement work. Gardner and Dunn[37] used sodium and manganese salts and then determined them by activation in the Oak Ridge Graphite Reactor. In the activable tracer tests they used the total-sample techniques and checked the method with the total-count method, using ^{198}Au as the tracer.

The second paper on flow measurement was by Kobayashi and Nukazawa[38] who used a double-tracer technique for measuring river flow. In this study, these workers used ^{24}Na as a tracer to indicate when the non-radioactive NaBr or NH_4Br was about to arrive at the sampling station; then they would take continuous samples and analyze the samples by neutron activation of the ^{82}Br. By using a combination of a radioactive and nonradioactive tracer they were able to inject very small amounts of radioactive tracer in the stream and limited the number of activation analyses that were required for the determination of flow rate.

Krypton-85 (4)

This isotope is used more frequently than any other in determining flow rates of gases because of its high specific activity, ease of handling and storage, long half-life, and low toxicity. It is almost a pure beta emitter and therefore the counter must be placed in the gas flow stream or a sample must be removed from the stream for counting. Berry, Clayton, and Webb[39] have used this isotope and the total-count method to measure the flow of gas in a high-speed gas reaction vessel, and Fries has used it, also with the total count method to measure the flow of noncondensible gas in a synthetic ammonia plant.

Xenon-133 (4)

Although ^{133}Xe has not been used as frequently as ^{85}Kr in many ways it is a better tracer for gas flow measurement work than is ^{85}Kr. Specifically it has a shorter half-life and is a gamma emitter so that it is easily counted in the field.

Johnson[41] used this isotope with the dilution technique to determine flows in a chemical plant. In some of his tests he determined the ^{133}Xe by direct on-line counting and in some he concentrated the ^{133}Xe by condensing it in a liquid nitrogen trap and then counting the trapped xenon.

Bromine-82 (4)

To take advantage of the good radiation properties of ^{82}Br, some workers have used this isotope in the form of ethyl bromide. Johnson[41] reports that he has had trouble with this material in a wet stream because of hydrolysis and Clayton[18] chose ^{85}Kr rather than ethyl bromide because the ^{85}Kr was available at much higher specific activity.

Injection of Tracer (3)

One of the most important factors in achieving accurate flow measurements with tracers is to inject the tracer into the flow in such a way that complete mixing of the tracer with the stream is achieved. If mixing of the tracer and the stream is not achieved, obviously, the measurement of the flow rate will either be too high or too low. This requirement for complete mixing applies either to constant-injection or sudden-injection methods, although it is much more important in constant-injection methods.

In this section, the effects of various methods of injection on mixing distance are discussed first; a description of methods for the continuous injection of a tracer into a liquid flow follows; a discussion of methods of instantaneous injection of tracers to a liquid is then given; and the section ends with a description of some methods that are used to inject a tracer into a gas. Most of the injection methods are intended for injection into closed pipes and conduits, since injection into open streams is usually as simple as pouring a bottle of tracer into the stream or releasing the tracer from a Mariotte flask or other simple devices. Sometimes in a wide stream the injection is made using a trough device so the tracer can be injected into the full width of the stream at the same time.

Mixing Distance (4)

Many workers have attempted to calculate the minimum distance required to achieve complete mixing of tracer and the flowing medium both in streams and pipes. Taylor has made a very complete theoretical analysis of diffusion of tracers both in the case of laminar[42] and turbulent[43] flow. Hull[27] has proposed the formula for calculating the minimum distance required for complete mixing as

$$L_{min} = 50Q^{1/3} \tag{6}$$

where L_{min} is the minimum length in feet required for complete mixing and Q is the flow rate in ft^3/sec. In stream flow measurements made by Hull, this formula seemed to work. However, Clayton and Smith[25] and Timblin and Peterka[34] found that it was not very satisfactory. Most workers[44] in the field now feel that to expect to accurately predict mixing lengths to

a factor of less than 2 is probably overly optimistic. The only way to be sure that proper mixing has been achieved is to take several samples across the stream and check that all the analyses agree within experimental error.

Clayton, Ball, and Spackman[45] have made tests of various methods of injection of the tracer to aid mixing. In these tests, they were working with a 10-cm tube and constantly injected the isotope. The injection positions chosen were (1) single orifice at the pipe wall; (2) single orifice on the pipe axis; (3) four orifices at the pipe wall; and (4) four orifices at 0.63 the radius of the pipe. Ten samples were then taken at different positions in the pipe and each sample was counted and the differences in counting rates were compared. In every test, and at all flow rates, the injection at 0.63 of the pipe radius achieved the fastest mixing. The results of a typical run are shown in Fig. 4.

In another experiment, Clayton tested the effect of mixing efficiency by injecting the isotope into the intake of a mixed flow (part centrifugal, part axial) pump. In this test, a 20-in. pipe was used and the flow rate was 8.2 ft^3/sec. Samples were taken across 2 diameters of the pipe at 90° to each other just beyond the discharge of the pump and showed that even in this short distance the tracer was completely mixed. Clayton warns, however, that these results cannot be extrapolated to other pump types.

Constant Injection Methods (4)

For the most accurate continuous injection of tracer, a precision single-stroke displacement pump is required. Clayton[19] and coworkers have described such a pump and have tested it extensively (Fig. 5). This pump operated with a synchronous motor and has an accurately machined

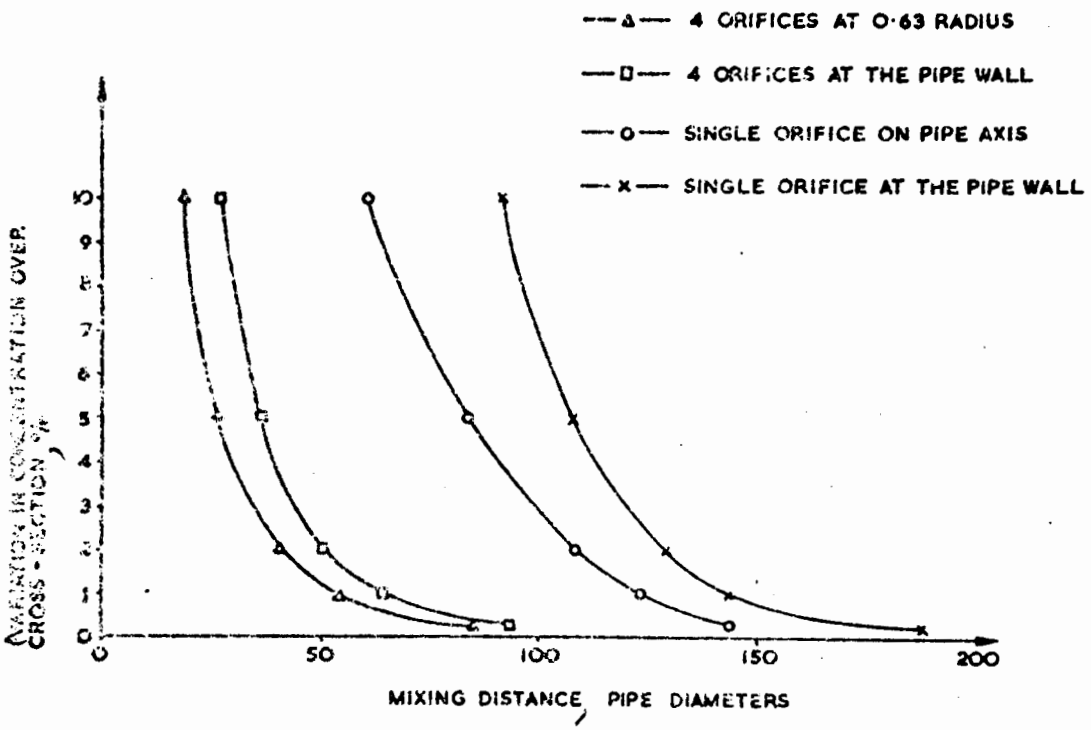

FIG. 4. THE EFFECT OF ALLOWABLE CONCENTRATION VARIATIONS ON MIXING DISTANCE FOR FOUR INJECTION SYSTEMS AT $7{\cdot}7 \times 10^4$.

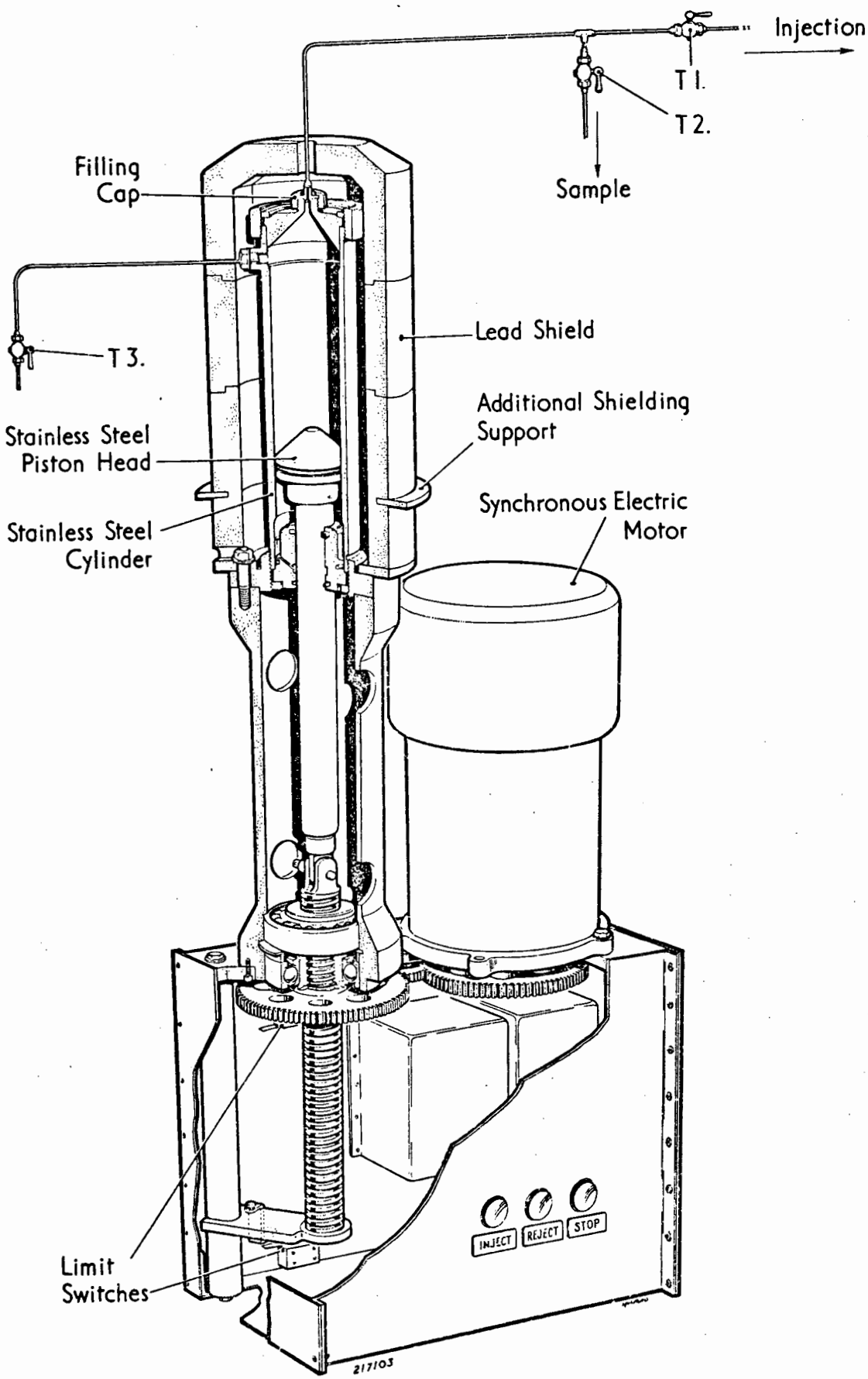

Fig. 5. Constant velocity injection pump.

cylinder. The measured error in the injection rate of the pump is less than ±0.05%; other specifications are

Diameter	2.751 ± <0.001 in.
Volume	46 in.^{3}
Linear velocity of piston	0.804 in./min
Maximum permissible back pressure	200 lb/in.^{2}
Output	4.78 in.^{3}/min (1.30 ml/sec)

Clayton and Evans have described a more recent version of this pump (Fig. 6) that has a carrying handle, portable lead shielding, and a gear selector to provide the option of three different injection speeds.

A common practice in water flow measurement using radioactive tracer techniques is to inject the tracer into an intermediate pipe containing water that is continuously pumped into the conduit. This "secondary" circuit has a flow rate several times that from the injection pump and thus provides a carrier fluid for the small volume of tracer. The water in the secondary circuit can be supplied from an independent source, or drawn from the main conduit by means of a "secondary pump" and then reintroduced into the conduit. Variations in flow rate in the secondary circuit are not important, provided that the transit time of the tracer in the secondary circuit is short compared with the transit time in the main fluid.

The use of a secondary circuit has several advantages. Principally, the larger flow rates avoid the possibility of small orifices becoming blocked and the increased momentum available at the point of injection into the main flow enables the tracer to be injected well away from the

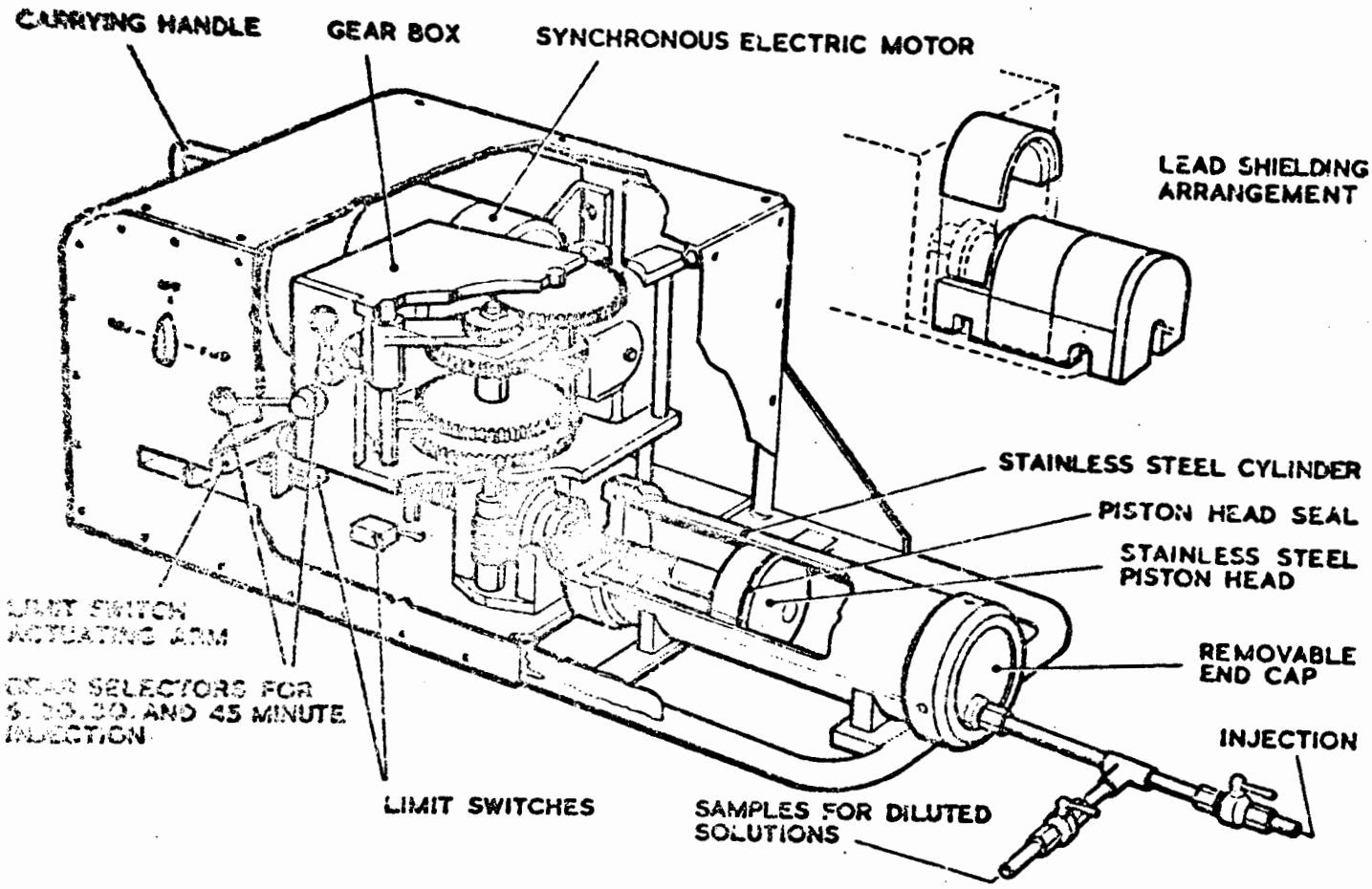

Fig. 6. Modified constant rate injection pump.

wall. The dilution of the tracer which occurs in the secondary circuit (~1/1000) and the increased momentum also help to reduce the mixing distance.

The use of high-velocity jet injectors with the secondary circuit can be used to spread the tracer laterally and consequently reduce mixing distance. Two designs are illustrated[48] in Fig. 7. Each jet is arranged so that the amount of tracer which is injected is proportional to the flow in the entrained region at the end of the jet. By use of rectangular orifices with the long sides about 20 times the short sides, and by arranging the long sides to be in the plane of flow, a large jet range can be obtained. By directing the jet upstream, impact mixing can be achieved. The design in Fig. 7b has the advantage of being subjected to only a small force from the fluid in the duct, but satisfactory operation is more difficult to achieve than in that shown in Fig. 7a because some of the jets are directed through regions of increasing and decreasing velocity profile. When jet injectors are used, it is most convenient to inject the tracer into the secondary circuit which is then used to drive the jets; in this way a high momentum can be obtained. In the designs of Fig. 7, the secondary flow is obtained from the main fluid using an annular channel outside the jet probe.

Rather than inject the tracer with a motor, Schuster and Hansen[23] used compressed nitrogen and the system shown in Fig. 8 in their studies of flow rates through penstocks. The penstock pressure at the injection location was ~35 psi and they did their injection using about 70 psi nitrogen pressure. To make a measurement, they put a measured amount of

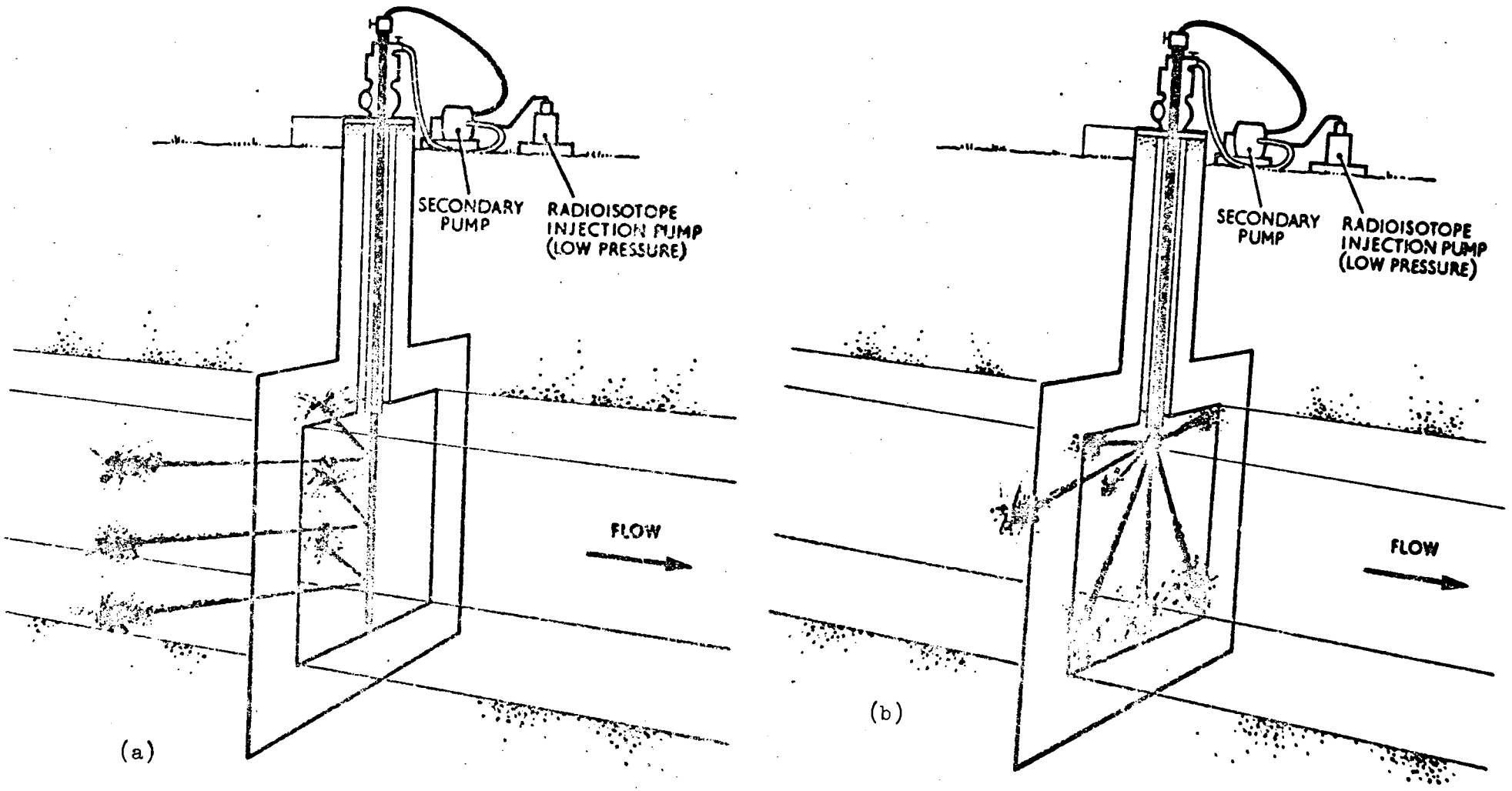

Fig. 7. Secondary pump with high velocity jet injectors (a) jets into flow stream; (b) jets perpendicular to the flow stream.

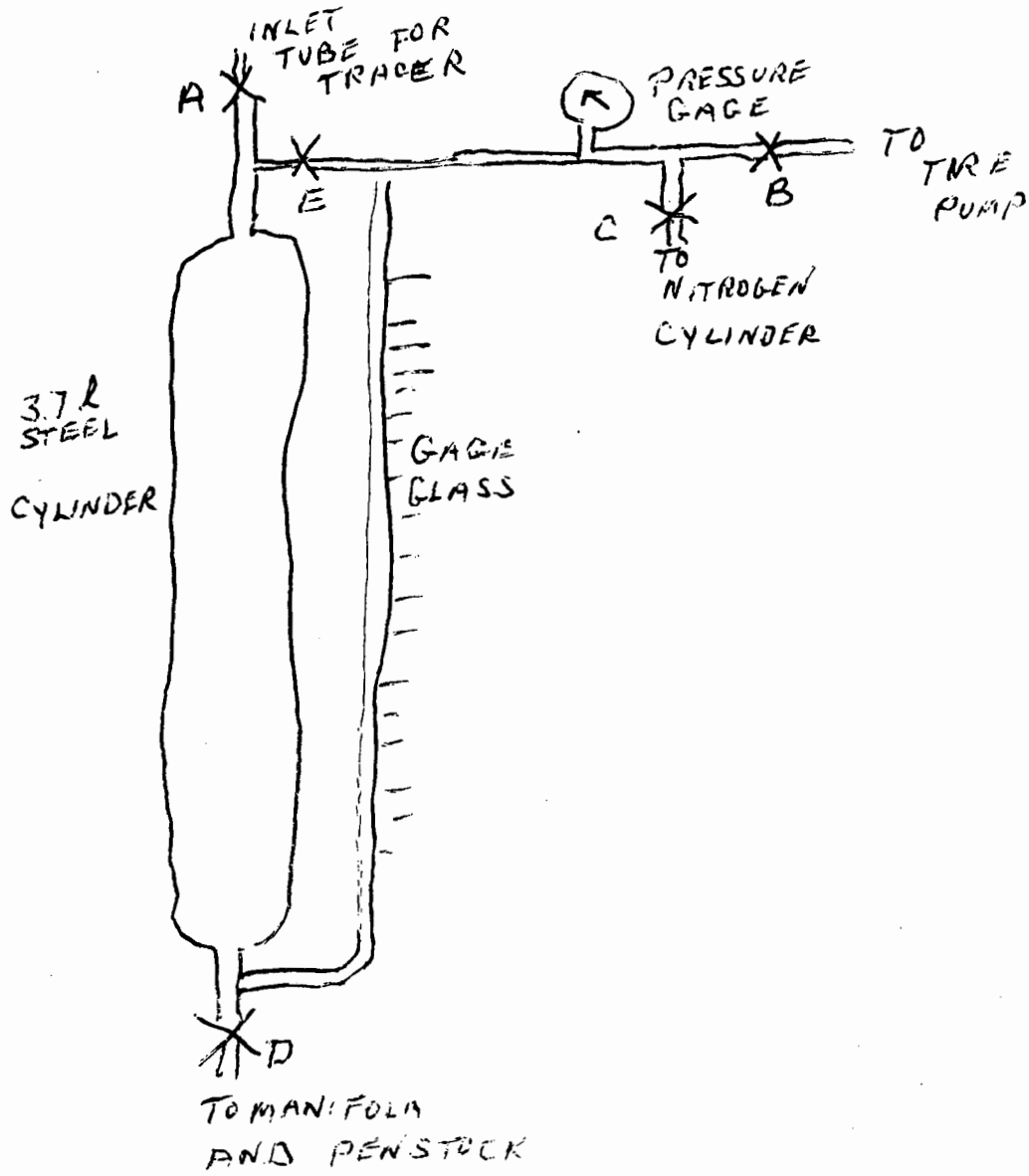

Fig. 8. Continuous injection system using compressed nitrogen pressure.

tracer in the steel cylinder through valve A, and filled the cylinder with water. They then pumped air with a tire pump through the sight glass and water tracer mixture by opening valves B and A and closing valves C and E. Two to three minutes were sufficient for good mixing. The capacity of the cylinder was 3.7 liters and it was usually filled with about 3 liters of tracer—water mixture. The cylinder was volumetrically calibrated and provided with a gage glass scale for determining the volume injected. Timing was done with a stopwatch. To make a tracer injection they applied nitrogen pressure through valve C and a regulator while valves A and B were closed and valves E and D were open. The solution of tracer was injected at about 5 ml/sec through a four-way manifold into the penstock flow.

Instantaneous Injection (4)

Any of the devices described above for continuous injection may also be used for instantaneous injection if the injection is made for a very short period of time (m) — say 1 or 2 seconds. Injections such as this are suitable for flow determination by the total-count method but may not be satisfactory for the isotope-velocity method. Another injector that has been used successfully in the total-count method is a modified sparklet bottle (Fig. 9) that is designed for making carbonated water. The bottle was modified by adding a valve and pressure gage to the outlet after filling with the tracer. The bottle is then connected to the line, a CO_2 cartridge is screwed down to admit the gas, and the valve is opened; a drop in the pressure gage indicates when the injection is complete.

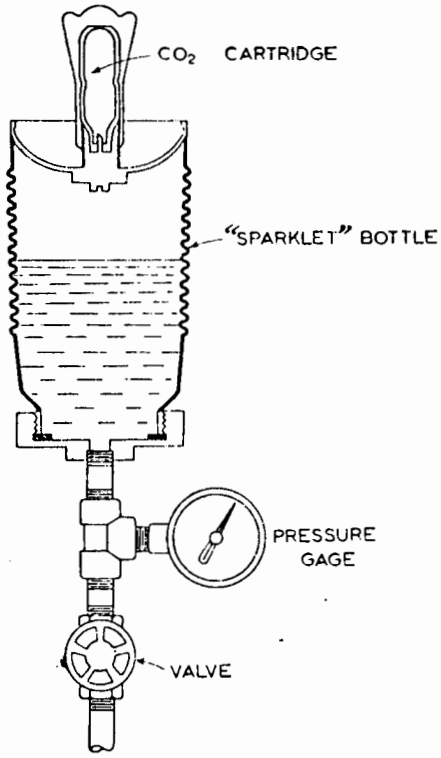

Fig. 9. Pressurized injector for liquid tracer

If faster injections are needed than those that can be obtained with the above methods, Clayton[20] has described a device that will inject the tracer solution in 15 milliseconds (Fig. 10). The radioisotope is introduced into the side arm either as a liquid from a separate container or in a small glass ampoule which can be broken by the striker. The volume injected is ~1 ml.

Once the radioisotope has been introduced the instrument is actuated by raising the cocking handle until the trigger engages. The cocking handle is then pushed down and the spring compressed against the bottom of the spring compartment which is held in position by the trigger. Rotation of the lever through 30° retains the lever in this cocked position by means of a bayonet socket.

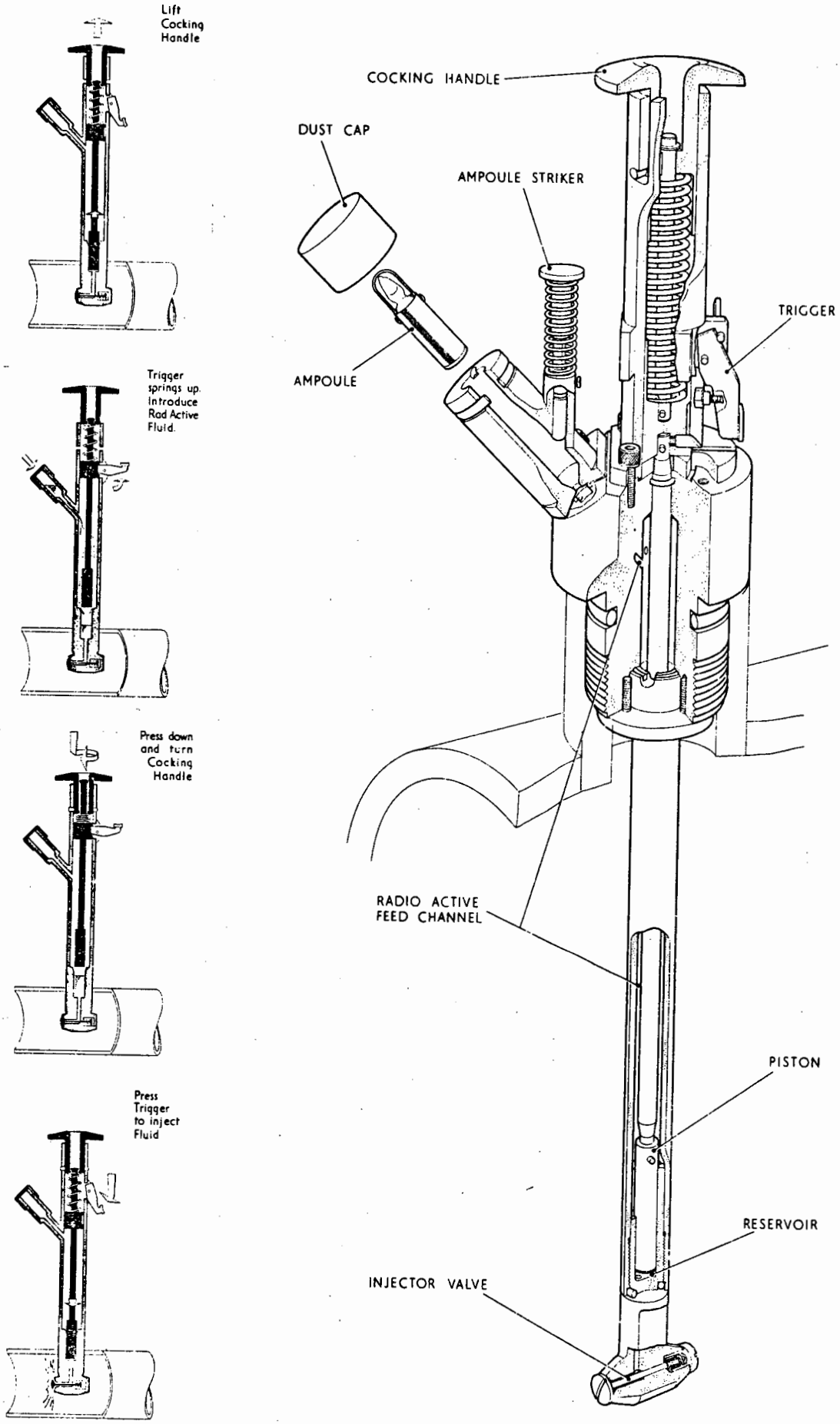

Fig.10. High speed injector.

To eject the solution into the pipe, the trigger is pressed, the spring drives the piston down and this in turn rapidly drives the volume of liquid out through the injector valve (which is normally closed by a small compression spring). As soon as the liquid has been expelled, the valve closes, the tension of the return spring being chosen to complete the operation of injection in approximately 15 milliseconds.

When the injector is re-cocked, radioactive solution again fills the reservoir so that a second injection can be made. The operating parts of the injector and those coming into contact with liquid are made of stainless steel to minimize corrosion.

To measure flow in different diameter pipes it is necessary to change only the injector end, so that the injector valve is always on the center line of the pipe.

Gas Injection (4)

Since continuous injection of gases into a flowing gas is difficult, most determinations of gas flow are made by either the isotope-velocity or total-count method. Both of these methods require sudden injection of the gas tracer into the gas stream. A typical injector for gas tracer to measure natural gas flow in a pipe line is that described by Kniebes, Burket, and Staats[49] (Fig. 11). The injector holds the tracer gas in the 50 ml central portion and the two check valves, which operate with a 50-lb pressure differential, allow the tracer to be blown into the natural gas flow but prevent flow in the other direction.

Clayton[18] points out that such an injection can introduce a shock wave in the flowing gas if compression ratios greater than 10 to 1

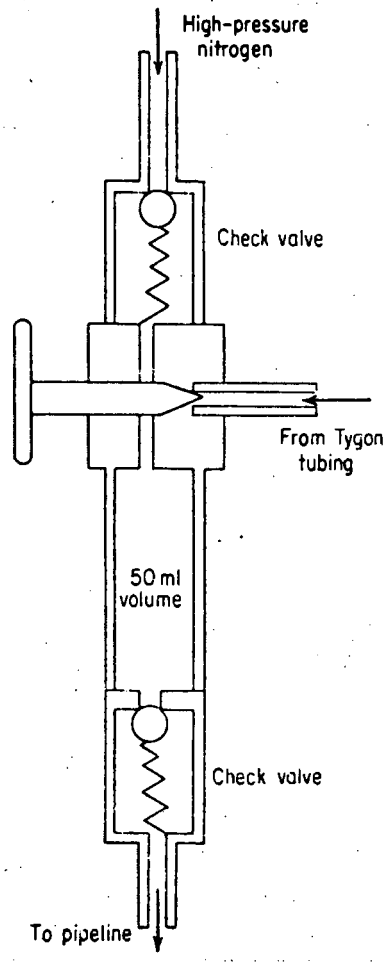

Fig. 11. Gas tracer injector

are used in the injector. He has suggested an injector that introduces no shock wave (Fig. 12) into the flowing gas. This injector is similar to an injector suggested by Taylor[43] for liquid injection. A piston perpendicular to the direction of gas flow contains two chambers — each having the diameter of the pipe. The upper chamber, A, is filled with the tracer gas, and when the trigger is released, the spring propels the chamber containing the tracer into the gas flow, replacing chamber B. With this method the 3 ml of gas in the chamber is inserted into the gas flow in 2 to 3 milliseconds.

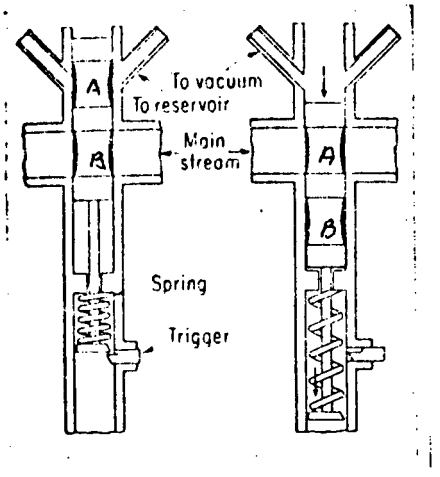

Fig. 12. High-speed injector for radioactive gases. When the trigger is released, the spring drives the chamber, (A) which is filled with a radioactive gas, into the main stream, replacing the section (B) normally present.

Gas Flow Measurements by Induced Ionization (3)

Another radioisotope method for measuring gas flow is to observe the movement of a cloud of ions produced in the gas by alpha or beta particles. The ions are detected by putting 2 electrodes in the gas flow, impressing an electrical potential on the electrodes, and observing the current flow caused by the ionized gas. This method was originally proposed by Blake[50] in 1928 and a number of patents and papers have been

published on different variations of it; but at the moment, no commercial instruments based on it are available and it is little used industrially. This lack of commercial acceptance seems odd when one considers a few advantages that this method has over tracer methods:

(1) no radioactivity is added to the flowing gas; (2) measurements may be made continuously; and (3) instantaneous changes in flow can be detected. Compared to most conventional flow meters, it induces much less pressure drop in the flowing gas. Methods based on the ionization of gas may be of the continuous-ionization or the pulsed-ionization type. In 1968, Toudoire[51] published a PhD thesis in which he made a rather comprehensive theoretical and practical study of both types of methods. Clayton and Webb[52] have also published a similar study of the continuous-ionization method.

Continuous Ionization Methods (4)

The basic design of the continuous ionization system in which the ionization source is upstream of the detector as proposed by Blake[50] is shown in Fig. 13. At low flow rates the ions move toward the detector but recombine before arrival. As the flow rate increases, ions start to reach the detector and current starts to flow. The collector current then continues to increase as the flow rate increases. Mellen[53] received a patent on a flow meter that had 2 detectors, one on each side of the source. The detectors were

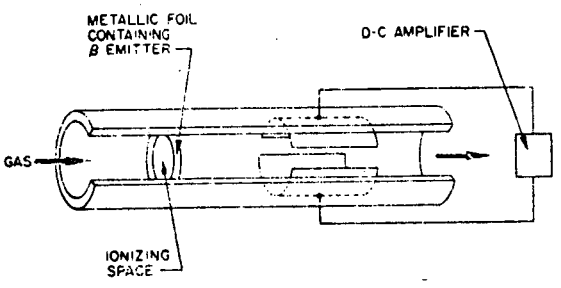

Fig. 13. Basic diagram of flow-measuring system with ionizing source upstream of the detector.

close enough to the source that when there was no gas flow there was a small current flow in each detector. This type of flow meter obviously measures both amount and direction of flow.

Lovelock and Wasilewska[54] have described an omnidirectional anemometer which measures both speed and direction of the wind. This device consists of 2 concentric spherical, open, work cages with a central spherical electrode coated with ^{210}Po. It will measure wind velocities of 0 to 1000 ft/min.

Obermair[55] described the system shown in Fig. 14 in which the source and detector are located at the same place in the gas stream. In this type of flowmeter, the faster the gas is flowing, the smaller the current indicated by the ionization chamber because more of the ions will be swept away before they can conduct a current.

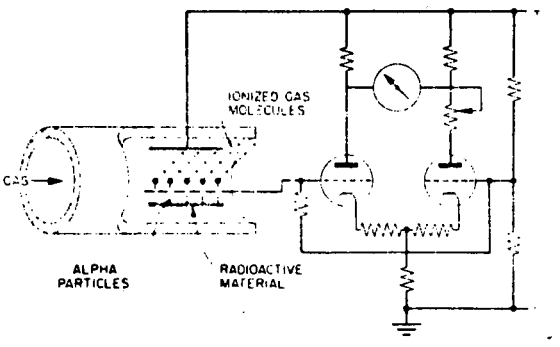

Fig. 14. Measurement of gas flow by induced-ionization system with ionizing source and detector at the same point.

Pulsed-Ionization Method (4)

The principle of this method is the same as the previously described isotope-velocity method except that, instead of the time for an isotope to move between two points being measured, the flow time of a cloud of ions is measured. The method as originally suggested[56] was with a spark source being used to give the pulse of ions; however, radioisotopes are just as satisfactory and much safer if the flow of a flammable gas is to be measured.

The apparatus used in this method is shown in Fig. 15. Toudoire[51] in his work on pulsed ionization methods studied both mechanical modulation of the ion beam as shown in Fig. 15 and modulation of the beam by putting another pair of collector electrodes in the gas stream between the source and collector and varying the current to discharge all of the ions part of the time.

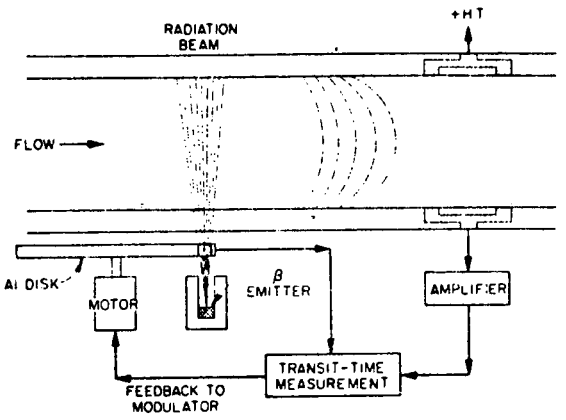

Fig. 15. Pulsed ionization method of gas-flow measurement.

Nontracer Uses of Radioisotopes for Flow Measurements (3)

Radioisotopes have been combined with more conventional flow measurement methods such as deflecting strips, hinged gates, rotating propellers, or rotameters to measure flow. Most of these applications have been in systems where high temperatures, pressures, or corrosive nature of the liquid made transmission of a conventional signal difficult.

Source on an Elastic Sheet (4)

One of the simplest of these mechanical-radiation measuring devices was described by Shumilovskii and Mel'ttser[57] and is shown in Fig. 16. The source (3) is suspended on a sheet in the fluid flow. As the flow rate increases the source moves along the path indicated by the dotted curved line at the bottom until it reaches a point on the axis of the

collimator (4) and the detector (5). At this point, the reading of the radiation intensity will be at a maximum. Further increase in flow will result in a decrease in radiation intensity. The output meter is calibrated in terms of volume flow.

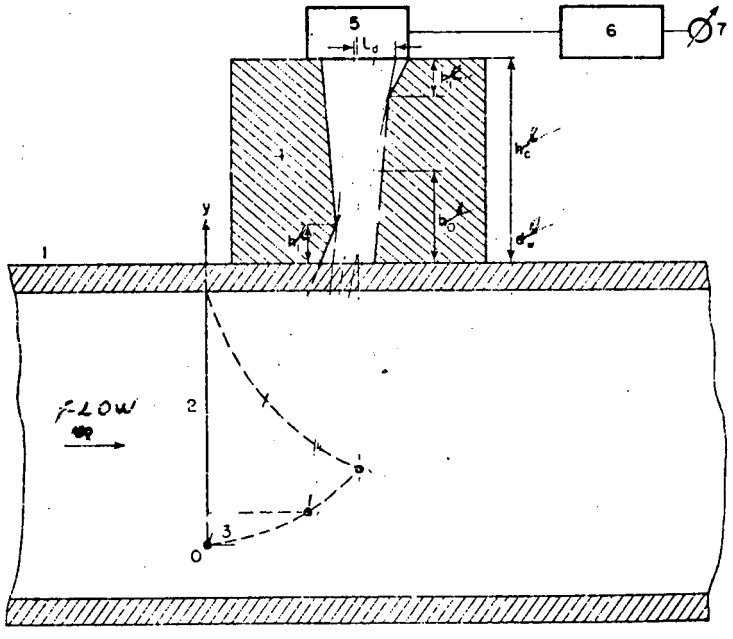

Fig. 16. Measuring the volume flow of a liquid from the position of an elastic sheet.

Hinged Gate with Radioactive Source (4)

Clayton and Webb[58] have established the general characteristics of a flow meter based on a hinged gate and radioactive source (Fig. 17). The gates in these devices may be solid or have various sized holes in them depending on the flow rate. The radiation detector used was a small cadmium sulfide crystal. If the range of flow rates to be measured varies widely, two detectors may be used as shown. For the lower end of the range, detector B should be used; at the upper end of the range detector A would function. Clayton and Webb estimate that such a meter could be used in measuring gas flows between 1 and 1000 ft^3/hr.

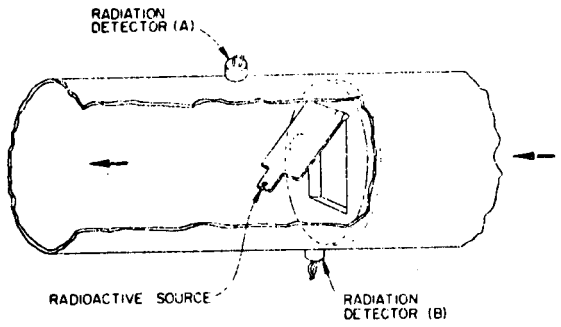

Fig. 17. Hinged-gate method of flow measurements.

Rotating Propellers with Sources (4)

Another type of mechanical flow meter that used radioisotopes to extract the signal is a rotating propeller with a source embedded in one vane. Such a flow meter has been described by Shumilovskii, Gushchin, and Tolokonnikov[59] (Fig. 18). In Fig. 18 the measuring device (3) is a frequency meter that counts the number of pulses of radiation "seen" by the counter (2), these counts are recorded on meters (5) and (6). One of which is graduated in units of instantanous flow rate and the other as total volume flow. This meter was designed to operate in corrosive atmosphere or high pressures.

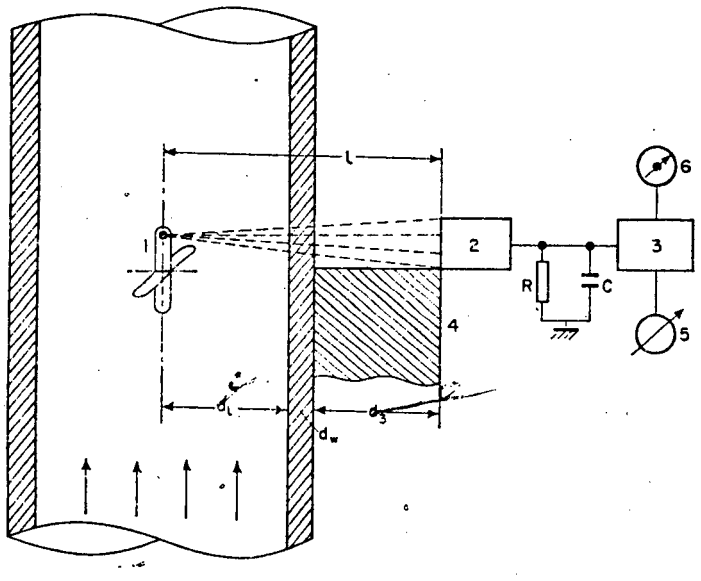

Fig. 18. Block diagram of a frequency-type flow-meter.

Carlson, Cederberg, and Ljunggren[60] use a similar propeller device to measure the

flow of water in the downcomer of a boiler operating at 2000 psi and 520° to 540°C. They imbedded two ^{60}Co sources one of 10 mCi and the other of 3 mCi displaced 120° realtive to each other. By recording the pattern of radiation that appeared on the detector they were able to determine not only the rate but also the direction of flow. An interesting part of this study was that they used an isotope-velocity method with ^{82}Br as a tracer to check the flow rate determined with the propeller.

Rotameter with Radioactive Float (4)

Cameron, Berry, and Taylor[61] used a traditional glass rotameter enclosed in a stainless steel tube and a float with 80 μCi of ^{60}Co embedded in it to measure low flow rates at 300°C and 2000 psi. They placed a scintillation counter at the bottom of the flow meter and thus as the flow rate increased and the float rose, the radiation recorded by the counter fell. This meter could measure flow rates from 0 to 100 cm^3/min and at a flow rate of 50 cm^3/min had an error of ± 1 cm^3/min.

References (3)

1. Radioisotopes in Hydrology, Proc. Symp., Tokyo, 1963, IAEA, Vienna, 1963 (STI/PUB/71).
2. Isotopes in Hydrology, Proc. Symp., Vienna, 1966, IAEA, Vienna, 1967 (STI/PUB/142).
3. M. Gerrard, Measurement of Ventilation Rates with Radioactive Tracers, Isotop. Radiat. Technol. 5: 278-80 (1968).
4. M. Gerrard, Leak Detection with Radioisotope Tracers, Isotop. Radiat. Technol. 6: 44-57 (1968).
5. E. B. Jones, Instrument Technology, Vol. I, Measurement of Pressure, Level, Flow, and Temperature, 2nd Ed., Butterworths, London, 1965, pp. 107-227.
6. National Engineering Laboratory, Flow Measurement in Closed Conduits, 2 volumes, Proc. Symp., Glasgow, 1960, Her Majesty's Stationery Office, Edinburgh, 1962.
7. A. James, Flow Measurement Using Microbiological Tracers, in Dilution Techniques for Flow Measurement, V. K. Collinge and J. R. Simpson (Eds.) University of Newcastle upon Tyne, Department of Civil Engineering, Bulletin No. 31, 1964, pp. 94-98.
8. R. W. Filmer and V. M. Yevdjevick, Bibliography and Discussion of Flow Measurement by Salt-Dilution and Salt-Velocity Techniques (Turbulent Diffusion of Soluble Tracers), Colorado State University, Report No. CER66-67RWF-VMY23, November 1966.
9. M. Th. Schloesing, New Method for Gaging Fluids (In French), Comp. Rend. 57: 164-166 (1863).
10. C. M. Allen, Salt-Velocity Method of Measuring Water in Pipelines, Engineers and Engineering 39(6): 196-197 (1922).

11. J. Joly, On a New Method of Gauging the Discharge of Rivers, The Scientific Proceedings of the Royal Dublin Society, New Series 16(37): 489-491 (1922).

12. V. F. Hess, On the Use of a Radioactive Tracer Method in Water Measurement, Trans. of the American Geophysical Union 24(pt 2): 587-594 (1943).

13. S. Karrer, D. B. Cowie, and P. L. Betz, Use of Radioactive Tracers in Measuring Condenser Water Flows, Power Plant Engr. 50(12): 118-120 (1946).

14. D. E. Hull, The Total-Count Technique: A New Principle in Flow Measurement, Intern. J. Appl. Radiat. and Isotopes 4: 1-15 (1958).

15. D. E. Hull, B. A. Fries, R. J. Dupzyk, and D. J. Lamoree, Isotope Engineering at Large Flow Rates, Trans. Amer. Nucl. Soc. 3(2): 453-454 (1960).

16. D. E. Hull, Fluid Flow Measurement, U.S. Patents 2,826,699 and 2,826,700, March 11, 1958. Filed October 29, 1954, and April 27, 1956.

17. C. G. Clayton, The Measurement of Flow of Liquids and Gases Using Radioactive Isotopes, The Journal of the British Nuclear Energy Society 3: 252-268 (1964). The article was also published in Isotopes and Radiation Technology 4: 93-108 (Winter 1966-1967).

18. C. G. Clayton, Precise Tracer Measurement of Liquid and Gas Flows, Nucleonics 18(7): 96-100 (July 1960).

19. C. G. Clayton, A. M. Ball, W. E. Clark, and E. A. Spencer, The Accurate Measurement of Turbulent Flow in Pipes Using Radioactive Isotopes —

The Isotope Dilution Method, in Flow Measurement in Closed Conduits, Conference Proceedings, East Kilbride, Scotland, 1960, Vol. 2, pp. 535-553, Her Majesty's Stationery Office, Edinburgh, 1962. (This work is also described in UKAEA Report AERE-R-3028, 1959).

20. C. G. Clayton, W. E. Clark, and A. M. Ball, The Accurate Measurement of Turbulent Flow in Pipes Using the Isotope Velocity Method and the Effect of Some Restrictions on Optimum Operation, in Flow Measurement in Closed Conduits, Conference Proceedings, East Kilbride, Scotland, 1960, Vol. 2, pp. 555-576, Her Majesty's Stationery Office, Edinburgh, 1962. (This work is also described in UKAEA Report AERE-R-3090, 1959.)

21. C. G. Clayton, R. Spackman, and A. M. Ball, The Accuracy and Precision of Liquid Flow Measurement by Radioactive Isotopes, in Radioisotope Tracers in Industry and Geophysics, Proc. Symp., Prague, 1966, pp. 563-589, IAEA, Vienna, 1967 (STI/PUB/142).

22. J. C. Schuster and R. L. Hansen, Discharge Measurements Using Radioisotopes in High-Head Turbines and Pumps at Flatiron Power and Pumping Plant, Colorado - Big Thompson Project, USAEC Report TID-25177 U. S. Bureau of Reclamation, 1968.

23. J. C. Schuster and R. L. Hansen, Discharge Measurements Using the Radioisotope Velocity, Integrated Sample, Dilution and Total-Count Methods at Flatiron Power and Pumping Plant, Colorado - Big Thompson Project, USAEC Report TID-25185, U.S. Bureau of Reclamation, 1969.

24. D. B. Smith, P. L. Wearn, and T. V. Parsons, Accuracy of Open Channel Flow Measurements Using Radioactive Tracers, UKAEA Report AERE-R-5676, 1968.

25. C. G. Clayton and D. B. Smith, A Comparison of Radioisotope Methods for River Flow Measurement, in Radioisotopes in Hydrology, Proc. Symp., Tokyo, 1963, pp. 1-24, IAEA, Vienna, 1963 (STI/PUB/71).

26. D. E. Hull and M. Macomber, Flow Measurements by the Total Count Method, Proc. Second Intern. Conf. Peaceful Uses At. Energy, Geneva 1958, Vol. 19, pp. 324-332, United Nations, New York, 1958.

27. D. E. Hull, Dispersion and Persistence of Tracers in River Flow Measurements, Intern. J. Appl. Radiat. Isotop. 13: 63-73 (1962).

28. Half-lives and decay schemes are taken from F. E. McKinney, S. A. Reynolds, and P. S. Baker, Isotope User's Guide, USAEC Report ORNL-IIC-19, Isotopes Information Center, 1969.

29. Maximum permissible concentrations are taken from National Committee on Radiation Protection, Maximum Permissible Body Burdens and Maximum Permissible Concentrations of Radionuclides in Air and Water for Occupational Exposure, National Bureau of Standards Handbook 69, U.S. Government Printing Office, Washington, D. C., 1959.

30. D. B. Smith and W. E. Clark, An Investigation of the Hydraulics of an Underground Pool with Iodine-132, in Radioisotopes in Hydrology, Proc. Symp., Tokyo, 1963, pp. 77-88, IAEA, Vienna, 1963 (STI/PUB/71).

31. W. J. Lacey and W. deLaguna, Method of Preparing Radioactive Cations for Tracing Ground Water, Science 124: 402 (1956).

32. G. Knutsson, K. Ljunggren, and H. G. Forsberg, Field and Laboratory Tests of Chromium-51-EDTA and Tritium Water as a Double Tracer for Groundwater Flow, in Radioisotopes in Hydrology, Proc. Symp., Tokyo, 1963, pp. 347-63, IAEA, Vienna, 1963 (STI/PUB/71).

33. R. J. Heemstra, J. W. Watkins, and F. E. Armstrong, Laboratory Evaluation of Nine Water Tracers, Nucleonics 19(1): 92, 94-96 (Jan. 1961).

34. L. O. Timblin, Jr., and J. Peterka, Use of Radioisotopes for Open-Channel Flow Measurements, in Radioisotopes in Hydrology, Proc. Symp., Tokyo, 1963, pp. 37-61, IAEA, Vienna, 1963 (STI/PUB/71).

35. R. E. Greene, Tracing with Activable Tracers, Part I, Isotopes and Radiation Technol. 5(4): 269-77 (Summer 1968).

36. R. E. Greene, Tracing with Activable Tracers, Part II, Isotop. Radiat. Technol. 6(1): 70-76 (Fall 1968).

37. R. P. Gardner and J. W. Dunn, III, Stream Flow Measurement by an Inert Tracer Pulse Technique, Nucl. Sci. Eng. 15: 338-41 (1963).

38. M. Kobayashi and A. Nukazawa, Measurement of River Dilution and Flow by Means of Radioactive Tracers and Activation Analysis, in Radioisotopes in Hydrology, Proc. Symp., Tokyo, 1963, pp. 433-449, IAEA, Vienna, 1963 (STI/PUB/71).

39. P. F. Berry, C. G. Clayton and J. W. Webb, Tracer Study of Flow Characteristics in a High-Speed Gas Reaction Vessel by Means of ^{85}Kr, in Radioisotope Tracers in Industry and Geophysics, Proc. Symp., Prague, 1966, pp. 599-613, IAEA, Vienna, 1967 (STI/PUB/142).

40. B. A. Fries, Gas Flow Measurements by the Total-Count Method, Intern. J. Appl. Radiat. Isotop. 13: 277-280 (1962).

41. P. Johnson, Application of the Dilution Principle to the Measurement of Gas Flow Rates in Large-Scale Chemical Processes, in Radioisotope Tracers in Industry and Geophysics, Proc. Symp., Prague, 1966, pp. 615-624, IAEA, Vienna, 1967 (STI/PUB/142)

42. G. Taylor, Dispersion of Soluble Matter in Solvent Flowing Slowly Through a Tube, Proc. Roy. Soc. (London), Ser. A 219: 186-203 (1953).

43. G. Taylor, The Dispersion of Matter in Turbulent Flow Through a Pipe, Proc. Roy. Soc. (London), Ser. A 223: 446-468 (1954).

44. J. Guizerix, discussion after paper by T. Dinçer, Applications of Radiotracer Methods in Streamflow Measurements, in Isotopes in Hydrology, Proc. Symp., Vienna, 1966, pp. 93-113, IAEA, Vienna, 1967 (STI/PUB/141).

45. C. G. Clayton, A. M. Ball, and R. Spackman, Dispersion and Mixing During Turbulent Flow of Water in a Circular Pipe, UKAEA Report AERE-R-5569, 1968.

46. C. G. Clayton, The Use of a Pump to Reduce Mixing Length in the Dilution Method of Flow Measurement, UKAEA Report AERE-R-4623, 1964.

47. C. G. Clayton and G. V. Evans, Constant Rate-Injection and Velocity Methods of Flow Measurement for Testing Hydraulic Machines, UKAEA Report AERE-R-5872, 1968.

48. C. G. Clayton and R. Spackman, Improvements in or Relating to Injection Apparatus, British Patent 1,140,032, January 15, 1969; priority date January 20, 1965 (Also U.S. Patent 3,477,461, November 11, 1969).

49. D. V. Kniebes, P. V. Burket, and W. R. Staats, Argon-41 Measures Natural-Gas Flow, Nucleonics 18(6): 142-146, 147 (June 1960).

50. A. E. Blake, Gas Meter Including Radioactive Apparatus for Metering Gaseous Fluids, Materials and Electrodes Sensitive to Gas Ionization, U.S. Patent 1,808,709, 1931. (Chem. Abstr., 25: 4389)

51. B. Toudoire, Possibility of Gas Flow Measurements Using Ionization Produced by Radioactive Sources. Performance Obtained Using Continuous and Pulsed Ionization (in French), CEA Report CEA-R-3699, 1969.

52. C. G. Clayton and J. W. Webb, The Measurement of Mass Flow and Linear Velocity of a Gas by Continuous Ionization, Int. J. Appl. Radiat. Isotop., 15: 603-10 (1964).

53. G. L. Mellen, Velocity Metering of Gas Flow, U.S. Patent 2,611,268, Sept. 23, 1952; priority date June 2, 1947.

54. J. E. Lovelock and E. M. Wasilewska, An Ionizing Anemometer, J. Sci. Instr., 26: 367-70 (1970).

55. A. A. Obermaier, Ionization-Type Gas-Flow Meter, U.S. Patent 2,627,543, Feb. 3, 1953; priority date Nov. 12, 1947.

56. G. L. Mellen, Gas-Flow Speedometer, Electronics, 23(2): 80-1 (1950).

57. N. N. Shumilovskii and L. V. Mel'ttser, Radioactive Isotopes in Instrumentation and Control, pp. 129-135, The MacMillan Co., N. Y. 1964. (Translation from a Russian book published in 1959)

58. C. G. Clayton and J. W. Webb, Continuous Measurement of Gas Flow Using a Hinged Gate and a Radioactive Source, in Radioisotopes in the Physical Sciences and Industry, Proc. Conf., Copenhagen, 1960, Vol. I, pp. 499-509, IAEA, Vienna, 1962 (STI/PUB/20).

59. N. N. Shumilovskii, Yu. V. Gushchin, and M. I. Tolokonnikov, The Utilization of Radioactive Isotopes for the Automatic Control of the Rate of Flow of Fluids, in Transactions of the All-Union Scientific Technical Conference on the Use of Radioactive and Stable Isotopes and Radiation in the National Economy and in Science, April 4-12, 1957, Moscow, Machine Building and Instrument Making, USAEC Report AEC-tr-4492, pp. 307-10; originally published by Acad. Nauk SSSR, Moscow, 1958 in (Russian).

60. R. Carlson, B. Cederberg, and K. Ljunggren, Measurements of the Water Circulation in a High-Pressure Natural-Circulation Boiler, Combustion, 33: 25-30 (June 1962).

61. J. F. Cameron, P. F. Berry, and F. Taylor, A Radioactive Method of Measuring Low Water-Flow Rates, Brit. Chem. Eng., 4(2): 76-7 (1959).

THE APPLICATION OF NUCLEAR TECHNIQUES TO THE RECOVERY OF FADED PHOTOGRAPHS (2)

By R. M. Chatters and Camille Jacobs*

Supplementary Keywords: (INDUSTRY, REPRODUCTION / CHLORINE-36 / ACTIVATION, NEUTRON / ARTIFACT / AUTORADIOGRAPHY / REACTOR / SILVER-110M / NICKEL-63 / COPPER - 64 / SILVER-108 / IODINE-131 / MERCURY-203)

Abstract. Faded paper photographs, tintypes, and glass-plate negatives can be upgraded through neutron activation of the residual silver in the faded objects and subsequent exposure of photographic film or paper to the radiations from the long half-life ^{110m}Ag so produced. The nuclear technique is presented as one method of faded photograph recovery---not as the only or necessarily best method for so doing.

(Introduction)

Through chemical action and the ravages of time, many photographs have been threatened with discarding and destruction because the images have faded. The causes of fading are legion. Vestal,[1] in a recent paper, lists hydrogen sulfide, sulfur dioxide, rubber cement, water-absorbing glues and pastes, plywood, composition boards such as Masonite and Prestwood, newsprint papers, and sodium thiosulfate (hypo) among the chief culprits.

Fortunately, a number of techniques have been developed to recover endangered materials of archival value. Recovery by direct photography and chemical treatment[2,3] has long been practiced; however, chemical recovery

*Radioisotope and Radiation Laboratory, College of Engineering Research Division, Washington State University, Pullman, Washington 99163.

methods cannot always be applied without damage to the photographs. Thus a "nondestructive" technique was needed that would permit treatment without degradation or total destruction of the photographs requiring recovery. Ostroff[3,4,5] has reported that neutrons from a reactor were used to produce radioactive silver in photographic images and that autoradiographs were made from the activated photographs. The radiation emitted by the activated silver served the same purpose as other artificial radiant energy sources or sunlight---to expose x-ray film from which a new negative was obtained. Ostroff reported that his samples were activated for periods from only seconds to minutes and the exposure to the film was limited to several minutes, with the exposure to film being made as quickly as possible after irradiation. With the assistance of Sayre,[6,7] a number of rare old (ca. 1835-40) photographs on which images were nearly completely gone were subjected to the neutron treatment. The clarity of the resulting new photographs was quite spectacular.

More recently, Houtman[8] in the Netherlands has investigated the advantages of treating the image silver in photographic prints with radioactive solutions. He has reported that he obtained good results when he used solutions containing ^{203}Hg, ^{131}I, ^{63}Ni, ^{64}Cu, and ^{36}Cl. Some of his experiments showed that combinations of isotopes such as ^{203}Hg and ^{131}I lead to better results than either of the isotopes when used alone. Houtman felt that there were several advantages to his technique, i.e., "contaminants of the photographs have no influence and other isotopes than those of silver (hard β and γ emitters) can be used." Additional advantages lie in the fact that the investigator can more easily control the amount of radioactivity which is applied to the photograph.

The above method has the same disadvantage that accompanies chemical recovery of photographs---through wetting, it may damage the paper print, cardboard backing, or, in the case of tintypes, the enamel coating.[9] However, the method should be very good for the recovery of large, faded glass-plate negatives, which do not fit well into all reactor irradiation tubes.

For the past several years, Wagner[10] and his associates at Ohio State University have been experimenting with methods for the restoration of vintage 35mm cellulose nitrate motion picture film. The task is a formidable one. Wagner has considered the use of neutron activation recovery of the film but because of the bulk of material to be treated rejected the technique on the basis that "neutron activation would necessitate working with a mass of radioactive material beyond the limits of safety, time, and economic feasibility." For individual frames, the technique would doubtless be of real service, but for full cans of film it appears at the moment to be impractical.

Long Exposure Method (3)

The approach to the problem of recovery of faded photographs by the present authors[9] differs essentially from that described by Ostroff in the length of irradiation and exposure times. Also, the Washington State University studies were extended to include tintypes, glass-plate negatives, and old documents. The results of research on old documents are not included in the present report, but preliminary results show great promise.

Instead of a short irradiation time of the test photographs followed by immediate short exposures of photographs to film, optimum results on paper photographs (Figs. 1-4) were obtained when photographs

were irradiated for periods up to 15 min at 10^{13} n/cm^2·sec. This was followed by storage of the "hot" photographs for up to 8 days and exposure of the film to the irradiated photographs for 24 hr. The most safisfactory film was Kodak Industrial X-Ray Type M. The principal reason for the difference in procedure was that where Ostroff had his photographs exposed to the short-half-life (2.4 min) ^{108}Ag, in this work this short-half-life isotope was allowed to decay completely. Then the longer-half-life (260 day) ^{110m}Ag was used for exposure of the X-ray film. This delay procedure also eliminated the short-half-life radioisotopic forms of chlorine, bromine, and iodine which were a matter of concern to Ostroff because of their presence in some photographs. These elements decayed very early and were not a problem in the Washington State University research, whereas, with the immediate-exposure technique of Ostroff and Sayre, they might affect the final product.

For most of the experimental work, old stereographic views, popular at the turn of the century, were found to be very useful because one of the pair of photographs served as the "control." The other photograph was irradiated in the reactor and used for making a new photograph. Thus, comparison between a treated and an untreated photograph became more meaningful. Several examples of stereographs, even though not faded, were copied by means of neutron activation (Figs. 2, 3, 4, and 5). Each was activated at a flux of 10^{13} n/cm^2·sec for 15 min and then exposed to x-ray film for 4 hr before developing. The activated photographs used to produce Figs. 1, 2, and 5 were stored for 7 days and that for making Fig. 3 for 8 days and Fig. 4 for 119 hr before exposure to the film.

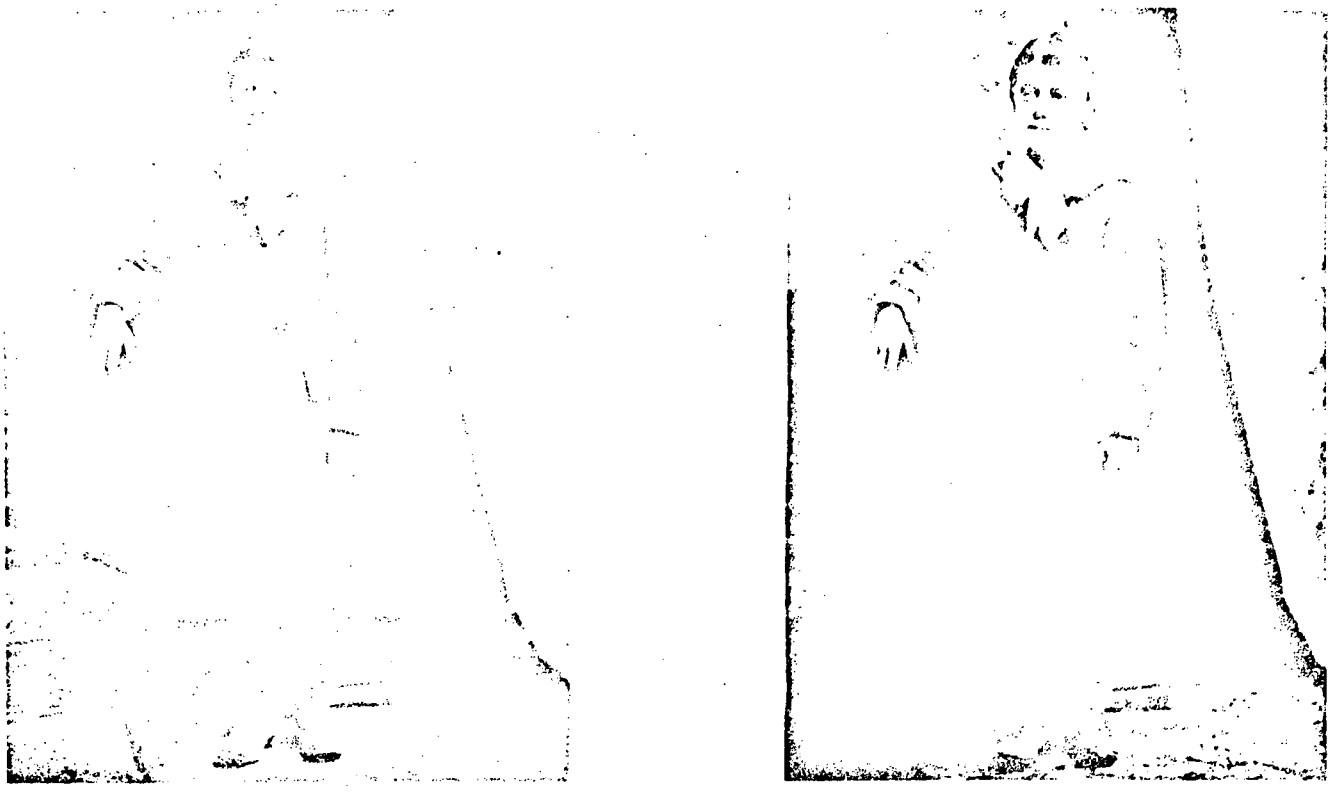

Fig. 1. "Standing Boy." Photograph on left irradiated with neutrons to produce photograph on the right.

Fig. 2. "Biddie and the Rat." Stereograph (left) irradiated to produce photograph at the right.

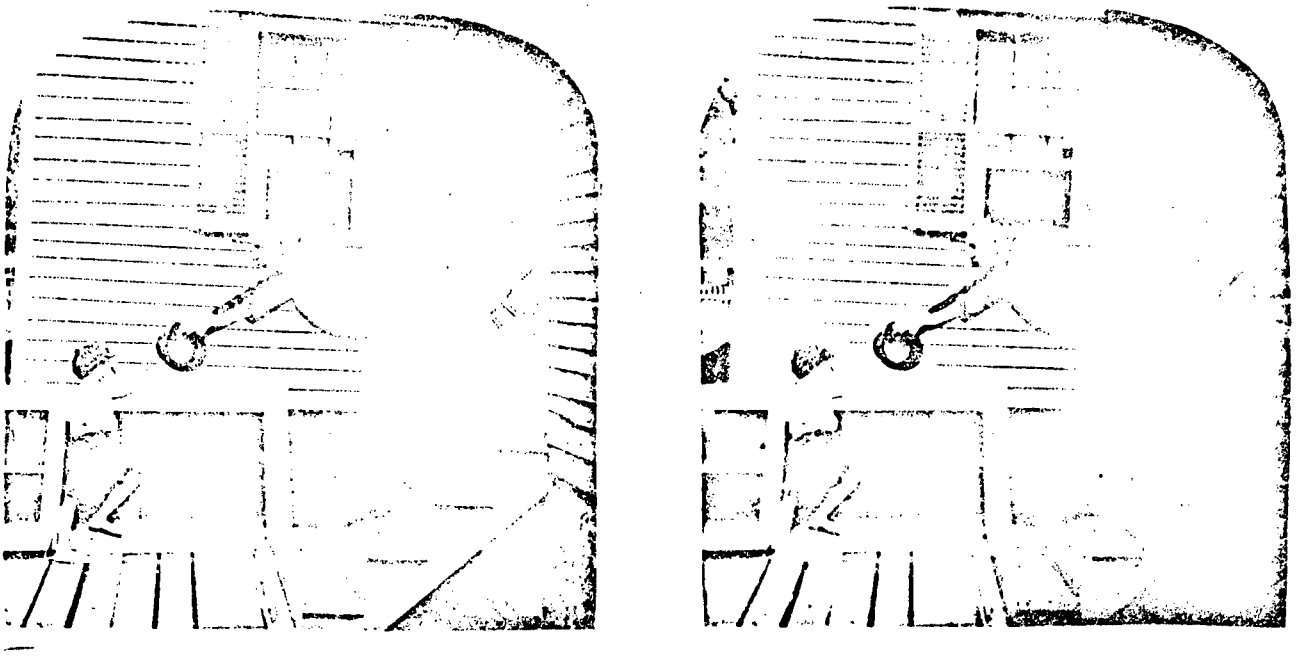

Fig. 3. "Hello Dad! What's the matter? You seem put out." Stereograph (left) treated in same manner as Fig. 2.

Fig. 4. "Basalt Field." Stereograph (left) irradiated to produce photograph at the right.

Fig. 5. "For heaven's sake, Maria, give us a rest!" Stereograph (left) irradiated to produce photograph at the right. Resulting photograph not equal in quality to the original.

In each figure in this paper, the photograph at the left shows the appearance of the original untreated photograph. With the exception of the tintype, each was a brown tone.

The most striking results (Fig. 6) of the research were obtained on a small tintype photograph from which the image had become almost completely obliterated due to having been wetted and scratched. This photograph was exposed in the nuclear reactor at a flux of 10^{13} n/cm^2·sec for a period of 180 min, but because of the activation of the iron backing, the photograph was stored for 15 days before exposing the x-ray film to it for a period of 48 hr. This tintype was made about 90 years ago, as the subject of the photograph is now 94 years old. When presented with a copy of the upgraded photograph, she expressed her pleasure at seeing herself again in her "favorite dress."

The negatives produced from irradiated paper photographs are positive prints on film and require a second negative to be produced from them before preparing paper prints. On the other hand, a negative obtained following exposure of the film to an activated tintype is a true negative and can be used directly to produce a paper positive print. (The difference is that in a positive print, the dark image is silver, while in a tintype the dark image is the black enameled iron since such pictures are made by a reversal process.)

When preparing prints, it was impossible to predict in advance what the autoradiograph contrast would be. Each picture was a separate experiment in itself and required individual handling during exposure to photographic paper and subsequent development.

Further, as is shown in Fig. 2, intimate contact between all parts of the neutron-activated photograph and the x-ray film was often difficult

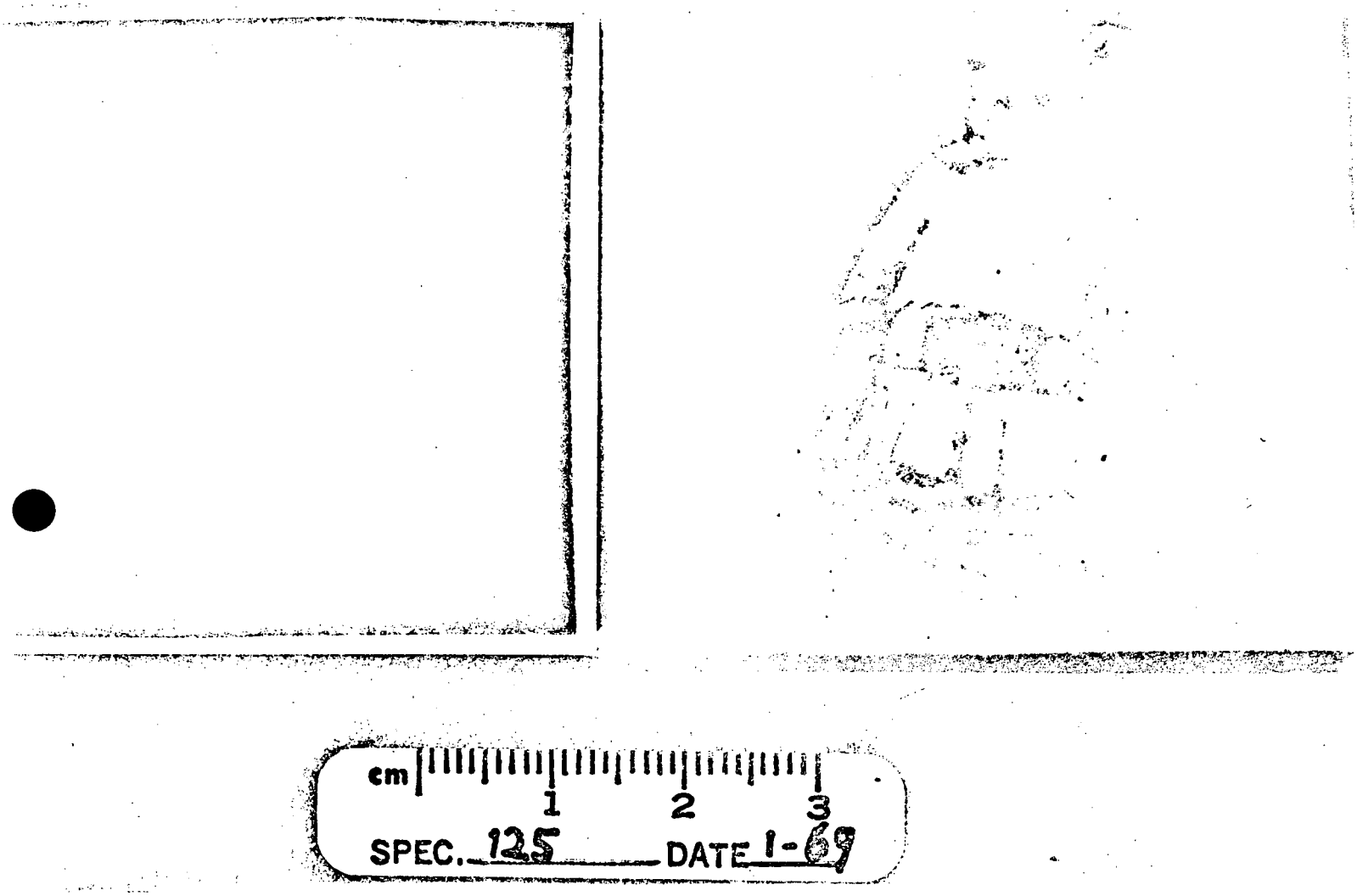

Fig. 6. "Dr. Wilder's Mother." Faded and damaged tintype on the left neutron-irradiated to produce photograph on the right.

to accomplish. Where close, uniform contact between the activated photograph and the x-ray film was not possible because of an uneven (wrinkled or folded) photograph, lack of uniformity in the final image resulted. With tintypes, which were often bent or dented---as was the case in the tintype used in Fig. 6---the problem was magnified severalfold. Attempts to upgrade the stereograph in Fig. 5 were to no avail; in fact, the new photograph was less clear than the original.

Neutron activation of a faded glass negative produced results which were sufficiently promising to indicate that this technique can also be applied to the recovery of these old plates. However, because the plates were too large to go into the reactor irradiation tubes, the experimental plates were cut into 1 in. x 2 in. segments. Hence, the radioactive solution tagging method of Houtman or the use of a tunnel system such as has been available to Sayre for neutron activation at the Brookhaven National Laboratory would be more suitable for the recovery of old plate negatives.

During the course of the research, a number of experiments were carried out to determine the feasibility of going directly from the irradiated photograph to photographic paper. The results indicate that this technique can also be used for the recovery of irradiated faded paper photographs. The method of direct exposure of photographic paper to irradiated tintypes and glass-plate negatives has not yet been attempted.

References (3)

1.* D. Vestal, Are Your Prints Fading Away, *Pop. Photogr.*, 64(4): 67-8, 106-09 (1969).

2.* Restoring Faded Photographs, *Defender Trade Bulletin*, Defender Photo Supply Co., Inc., Rochester, N. Y., ca. 1940.

3. E. Ostroff, Talbot's Earliest Extant Print, June 20, 1835, Rediscovered, *Photogr. Sci. Eng.*, 10: 350-54 (1966).

4. E. Ostroff, Early Fox Talbot Photographs and Restoration by Neutron Activation, *J. Photogr. Sci.*, 13: 213-27 (1965).

5. E. Ostroff, Restoration of Photographs by Neutron Activation, *Science*, 154: 119-23 (1966).

6. E. V. Sayre, Revelation of Internal Structure of Paintings Through Neutron-Activation Autoradiography, in "Proceedings of the First International Conference on Forensic Activation Analysis," San Diego, California, pp. 119-32, 1966.

7.* E. V. Sayre, The Nuclear Age and the Fine Arts, "Proceedings 1967 Youth Congress on the Atom," USAEC Report BNL-12314, 1967.

8. J.P.W. Houtman, Personal letter to R. M. Chatters, February 1969.

9. R. M. Chatters and Camille Jacobs, Recovery of Faded Photographs by Nuclear Techniques, *Photogr. Appl. Sci. Technol. Med.*, 4(15): 26-7, 47 (1970).

10.* R. W. Wagner, Preservation and Restoration of Photographic Materials Through Nuclear and Ultra-sonic Methods, Presented at the Second Annual Indiana-Kentucky Archives Seminar, Louisville, Kentucky, Apr. 24, 1970.

LABELING OF COPPER WIRE WITH ^{110m}Ag FOR SUBSEQUENT IDENTIFICATION (3)

L. C. Bate* and F. F. Dyer*

Supplementary Keywords: forensic investigation; tracer; material tracing; differentiation.

Abstract. Labeling of copper electrical cable with ^{110m}Ag was demonstrated as a suitable technique for use in subsequent identification of such cable in case of theft. The ^{110m}Ag, in solution, is applied inside the cable, i.e., on the surfaces of the wires that are twisted together to form the cable, with a hypodermic needle and allowed to dry. The label is not removed by several years of simulated weathering and can be detected by monitoring with a survey type radiation meter. The technique can be carried out by a semiskilled person with a minimum of training.

(Introduction)

Copper wire stolen from storage areas of power companies and remote power lines is difficult to identify even if subsequently located. The stolen wire may even be cut into pieces 1-1/2 to 3 ft long, burned to simulate scrap, and sold to a junkyard. Therefore a permanent label, which will not be detached under weathering conditions or when the wire is burned, is needed together with an easy, rapid identification method for the label at such time as the labeled wire may be located.

A radioisotope that may be readily attached to copper wire and later identified by a survey meter appeared to offer promise as a label. The technique of applying such a label, its permanence after being applied, and a method for identifying it later were thus investigated.

---

*Analytical Chemistry Division, Oak Ridge National Laboratory.

Procedure (3)

Since copper wire may not be stolen for some time---several months to a year after being labeled (m) the half-life of the radionuclide used should be fairly but not excessively long, and a radionuclide with a half-life of about 1 year was decided on. For detection of the radioactive label in a pile of scrap, the radionuclide should be one that emits energetic gamma rays and preferably a large number of gammas per disintegration. The nuclide ^{110m}Ag was selected because it (1) has a desirable half-life ($t_{\frac{1}{2}}$ = 270 d), (2) emits eight gamma rays with energies exceeding 600 keV and branching ratios exceeding 10%, and (3) has chemical properties such that its ions tend to be readily reduced and form a stable deposit on copper. The nuclides ^{106}Ru and ^{192}Ir were also considered but thought to be less suitable than ^{110m}Ag.

Because size 000 wire---37 strands of wire twisted into a 3/4-in.-dia cable---is the most often stolen, work was concentrated on this material. A few tests were made on single-strand wire of 1/8 in. dia.

Labeling Technique (4)

About 0.2 ml of solution is placed between the strands of a copper cable so that the liquid flows into the air space inside the cable. The rate of penetration of liquid between the strands was found to depend on the acidity of the solution. A solution of 0.5 M HNO_3 appeared to give optimum deposition. ← The radioactive tracer was diluted to 100 μCi/ml and adjusted to 0.5 M acidity. This solution was introduced between the strands of the cable with either a disposable pipet or a hypodermic needle. Usually the solution was simply allowed to dry in order to deposit the ^{110m}Ag, but sometimes formaldehyde was added to enhance deposition. Electrodeposition was also tested, the electrical potential being applied by attaching the negative terminal of a 6-V battery to the cable and the positive terminal to a wire in contact with the solution inside a disposable glass pipet, the solution being allowed to run gradually between the cable strands. In labeling a large amount of cable, injection of the labeling solution would be repeated at specified intervals along the wire.

After the solution had dried, the cable was lacquered with Sherwin-Williams clear lacquer #AA 13505, which is specifically made for coating copper and is

phosphorescent under certain type of light. The radioactivity in the cable was measured, the cable wiped with a damp cloth, and the radioactivity remeasured to determine the amount removed. When thoroughly dry, the cable was flushed with water again and recounted. To test the permanence of the label under simulated field and weathering conditions, the cable was placed in the south window of a laboratory, where it stayed in the sunlight for a year and a half, after which it was wiped, and both wipe and cable were recounted. To simulate burning, the cable was then flamed with a burner and flushed with water, radioactivity measurements being made after each of these procedures.

In the field tests, a Victoreen survey meter 3 ft from the cable in a scrap pile was used for detecting 45 μCi of ^{110m}Ag.

Results (3)

In five tests (as described above) on 37-strand copper cable, ^{110m}Ag losses averaged 4.5% (7.6% if the high values for test C are excluded) (Table 1). Sunlight, by reducing the ^{110m}Ag ions to metallic silver, should improve the bonding of the tracer to the cable. An HNO_3 concentration of 0.5 M in the deposition solution resulted not only in better deposition but in better retention than did 0.1 M.

Turning the cable on its horizontal axis, with the same side of the cable facing the detector, resulted in changes in the count rate (Table 2). This apparently is due to changes in the amount of radiation that can be "seen" by the detector through the cracks between the strands, since after being heating the cable tends to unwind slightly, leaving larger cracks between the strands than before. Because the tracer is coated on interior surfaces, the angle to the counter apparently has a large effect on the count rate observed.

In a few tests on single strands of wire, after deposition of the tracer on the surface of the wire under several conditions, the wires were damp wiped to determine the amount of ^{110m}Ag that would remain after handling, as would occur in installation. As would be expected, retention was rather poor but

Table 1. PERMANENCE OF ^{110m}Ag LABEL ON COPPER CABLE

Material tested	HNO_3 conc. in deposition solution, M	^{110m}Ag remaining, % of deposited			
		After 1st wash	After 2nd wash	After burning	After 3rd wash
Cable A	0.1	96	92	92	85
Cable B	0.1	99	94	94	89
Cable C*	0.5	106	105	109	108
Cable D	0.5	93	94	96	96
Cable E	0.5	96	96	99	98
Average**		98^{+8}_{-5}	96^{+9}_{-4}	98^{+11}_{-6}	95^{+13}_{-10}

← DTIE: these are subs and supers.

*Values consistently >100% probably due to errors in positioning the cable 30 cm above the detector (see Table 2).

** Error values show the range for the five cables.

Table 2. COUNT RATE VARIATION WITH HORIZONTAL ROTATION OF COPPER CABLE

Change in angle, degrees	Count rate, c/min	Change in angle, degrees	Count rate, c/min
0	374,579	100	332,225
20	361,995	120	358,588
40	347,170	140	379,285
60	326,076	160	378,384
80	322,701	180	377,301

Table 3. RETENTION OF ^{110m}Ag ON SURFACE OF SINGLE STRANDS OF WIRE AFTER DAMP WIPING

Wire	^{110m}Ag remaining after wiping, % of deposited	
	No lacquer	Lacquered
As is	43.4	68.7
Sanded	63.9	83.6
Formaldehyde used in ^{110m}Ag deposition		
As is	46.8	83.6
Sanded	68.2	82.1

was markedly improved by application of a lacquer coating (Table 3). The "as-is" wire had an oxide film, which was in some cases cleaned by sanding. In half the tests formaldehyde was added to reduce the silver ion on the copper wire and improve the bonding.

Field Test (4)

A field test using 45 μCi of ^{110m}Ag plated on a copper wire was performed to demonstrate the ability to locate the radioactive label in a pile of copper scrap. The ^{110m}Ag source was placed under a pile of copper scrap. When the area was monitored with a Victoreen radiation instrument, it was possible to detect the radioactive material at about 3 ft. This should be an extreme case since in actual practice the labeled material should be distributed throughout the pile rather than at the bottom. Each label would contain 20 μCi of ^{110m}Ag, and a pile of scrap would likely have several labeled pieces. Of course, scanning at a distance closer than 3 ft would probably be possible. With careful monitoring of a scrap pile, the presence of one piece of labeled scrap should be detected.

Safety (3)

The radioactive tracer can be applied to the copper by a person with a minimum amount of training in the handling of radioactivity, the proper solution being made up in the laboratory prior to the labeling operation.

(MG)

RADIOISOTOPIC X-RAY GAGE FOR DETERMINING PARTICLE-SIZE DISTRIBUTION* (2)

Supplementary keywords: measurement and control system; measurement, other; industry; source, x-ray; promethium-147.

A radioisotopic gage for determining weight-size distribution of particles in the solid phase of a suspension has been designed and tested. Such an instrument is needed for use in powder technology to give the weight distribution of powder samples in suspension quickly and reliably. The new instrument, which is simple to operate and economic in cost, hopefully will fill this need for a wide variety of powders. Because of the constancy of the x-ray beam, corrections do not have to be made for source intensity variations during operation.

The instrument (Fig. 1) contains a ^{147}Pm x-ray source and a proportional counter, located on opposite sides of a settling tank. The intensity of the transmitted x-ray beam, determined by the counter, is proportional to the weight fraction of particles smaller than the Stokes' diameter applicable to the time and depth of fall. Hence the cumulative weight percentage of undersize particles is obtainable from the intensity readings.

In operation, the intensity of the transmitted beam is determined first with clear liquid in the tank, and then the powder under study is added and the suspension stirred. The sedimentation rate is determined by scanning the tank, moving the source and counter upward (by a small electric motor) during a preset time, which depends on the material under study. The graph obtained, of time vs. intensity, is converted to x-ray density (i.e., log of intensity), which is proportional to the powder concentration. The x-ray density for several materials with particles of micro-meter dimensions was shown to vary

*Summary of "A New X-ray Sedimentometer" by T. Allen and L. Svarovsky, J. Phys. E. (London) 3: 458-60 (1970).

linearly with concentration of the material in the range 0 to 0.1 vol % (Fig. 2). Values were reproducible with bronze powder in cyclohexanol and in 50% glycerol-water.

In the experimental set-up used, the sedimentation tank was made of Perspex, and the windows (for beam definition), of lead. Except for the brass source and detector holders, the rest of the equipment was of stainless steel. The proportional counter (1300 V) was xenon-filled.

The principle of this gage is similar to one developed under contract to the USAEC's Division of Isotopes Development for determining the amount of sediment suspended in a flowing stream (Isotopes and Rad. Technol. 4: 358-62 (1967).

(M.G.)

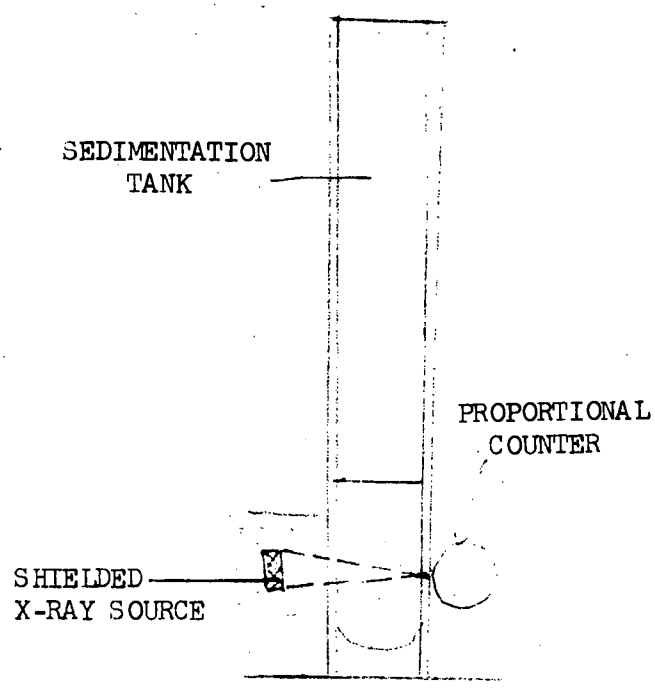

Fig. 1. Promethium-147 x-ray gage for determining particle sizes of suspended particles.

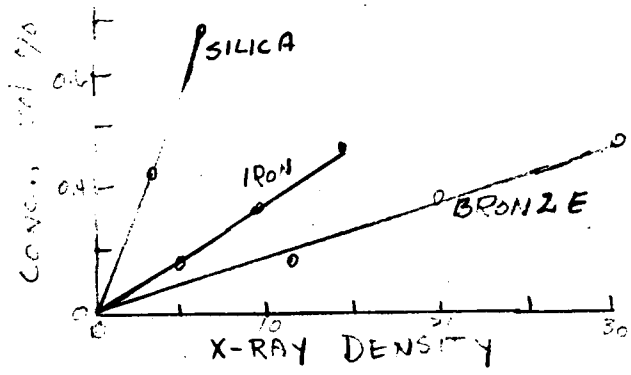

Fig. 2. Dependence of x-ray density on concentration of particles of different materials.

^{13}C Helps Reveal Carbohydrate Structure

Supplementary Keywords: chemistry, organic; biology; tracer; molecular structure; reaction mechanism; data handling; enriched stable isotope use; economics.

Carbon-13 nuclear magnetic resonance (NMR) spectroscopy is being used to study carbohydrate structure. A. S. Perlin with B. Casu and H. J. Koch at McGill University, Montreal, are pioneering the work. Improvements in instrumentation have overcome problems associated with the low natural abundance (1.1%) of ^{13}C. This stable isotope is a valuable tracer for organic mechanism and biological studies; and ^{13}C-NMR data are an important addition to proton-NMR data. If the demand increases for ^{13}C-enriched chemicals to be used in such work, their current high cost may decrease.

The aspects of carbohydrate ^{13}C-NMR spectroscopy being studied by Dr. Perlin and associates include chemical shifts, delocalization, substituent effects, interaction energy, chemical reactivity, and orientation of substituents. Spectra are measured at 25.15 MHz and are time-averaged by computer to obtain average signals from many scannings of ^{13}C in its natural abundance.

In studies of chemical shifts typified by work with the anomers α- and β-D-glucopyranose (glucose), it was learned that change of OH-1 from an equatorial orientation in the β-anomer to an axial orientation in the α-anomer causes increased shielding of most carbons in the molecule, an effect that is accompanied by decreased shielding of the appended protons. This interaction causes changes in bond polarization throughout the molecule.

These readjustments of electron density delineate a strain-delocalization process in response to steric compression caused by the axial hydroxyl group. The NMR spectra reflect the result as a change

in the ^{13}C and proton chemical shifts on going from the equatorial to the axial orientation. The data taken for carbohydrates indicate that the dependence of chemical shift on structure follows generally understandable patterns and corresponds closely with the findings by others of ^{13}C shielding and ^{1}H deshielding effects for isomeric cyclohexane derivatives.

Perlin's study of the influence of numerous functional groups and substituents on ^{13}C chemical shifts of carbohydrates showed that electronic effects are very prominent and generally conform to those expected from the behavior of other classes of compounds.

In considering interaction energy, Perlin proposes that the relative stabilities of isomeric compounds should be reflected in their ^{13}C chemical shifts, that is, if overriding polar influences are absent, the experimentally determined shifts should be a measure of energy differences of steric origin. He and his associates have shown for a number of sugars that energy differences between anomeric and diastereomeric sugars, or between geometric and positional isomers of cyclohexanes, parallel the relative overall shielding states of their ^{13}C nuclei. He suggests that ^{13}C and other chemical-shift data may aid in assessing the relative contributions of repulsive and stabilizing interactions within molecules.

Electron-density and bond-polarization changes revealed by ^{13}C-NMR spectroscopy should permit comparison of sugar chemical reactivity as a function of their electronic ground states.

Proton spin-spin splitting of ^{13}C is found to depend markedly on orientation of substituents. For example, the axial H-1 β-glucose

couples only with the appended ^{13}C-1, whereas the equatorial H-1 of the α-anomer couples to at least two other ^{13}C nuclei. Therefore, long-range C-H coupling may be an independent criterion for conformation.

It appears that ^{13}C-NMR spectroscopy should become increasingly important in the study of the structure and stereochemistry of carbohydrates.

(HPR)

---

*Condensed from "Carbon-13 NMR Gives Sugar Stereochemistry," Chemical and Engineering News, June 8, 1970, pp. 78-79.

A Simple Neutron Radiography Set*

Supplementary keywords (source, neutron; californium-252; economics; industry)

Successful neutron radiography with a very small neutron source of ^{252}Cf (140 μg) has been announced. The USAEC, who sponsored its development, hopes eventually to provide such sources for about $70. The ancillary equipment is simple--a bucket of tap water, some small sheets of metal foil, a cassette, and a box of x-ray film. Radiographs of shells taken through a lead box of 6-mm wall thickness (Fig. 1) and of a combination lock (Fig. 2) are typical. The radiographs show clearly the powder contents of the shells and the combination mechanism of the lock. Coarse-grained radiographs require only a 20-min exposure; fine-grained radiographs may require overnight exposure. With a small investment (< $300), any manufacturer should someday soon be able to have his very own radiography set--one that is simple, safe, and automatic and that requires little attention.

(HPR)

Fig. 1. Radiograph of shells.

Fig. 2. Radiograph of a combination lock.

*From J. P. Barton and M. F. Klozar, "Your Own Personal Neutron Radiography Set," Materials Evaluation 27(12): 12A (1969).

The Carbon-14 Dating of Iron

By N. J. van der Merwe
Assistant Professor of Anthropology
State University of New York, Binghamton

The University of Chicago Press, Chicago, 1969(137pp., $7.00, hardback)

Supplementary keywords: metallurgy, ferrous; artifact; geophysics; tracer; material tracing; technique; history; theory, applied; textbook; thesis; bibliography.

Not often is the interrelation of diverse disciplines presented so intriguingly as in The Carbon-14 Dating of Iron. The isotope ^{14}C binds together archaeology, history, metallurgy, and chemistry in this short and fascinating account of Professor van der Merwe's doctoral thesis research at Yale. By text and chart, the significance of the role of carbon in iron metallurgy is presented vividly. The reader comes to feel conversant with the differences among bloomery iron, wrought iron, cast iron, and steel and then to understand how treasures came to be--such as Merovingian and Viking swords whose surface texture creates an impression of light and dark bands, or Damascus blades, which have a surface like watered silk. Interesting historic facts are revealed--one of man's earliest sources of iron was of extraterrestrial origin (meteorites); iron was once forty times as valuable as silver.

The significance of Dr. van der Merwe's research is that it resulted in the successful development of a method for the ^{14}C dating of iron artifacts prepared with charcoal (coal contains no ^{14}C) and

also demonstrated the applicability of ^{14}C measurements to the dating of iron slag and of copper slag as well. The technique is a means to knowledge about the types of ores, fuels, and reducing agents used throughout history in iron metallurgy. In lieu of a charcoal specimen, an iron specimen may be equally valuable to an archaeologist; in lieu of both, a slag specimen may be just as useful. For the metallurgist, knowledge of the fuel and flux involved in the smelting operation, as well as of the slag produced from it, is essential in reconstructing the metallurgical process. For the historian, the history of fuels used in iron metallurgy and the history of charcoal production can be deduced from the ^{14}C data.

Professor van der Merwe describes the method in detail and, among his data, presents interesting results from Iron Age archaeological sites.

(HPR)

Radiography Using Photo-Nuclear Reaction* (3)

Supplementary Keywords: autoradiography; activation, photon; comparison; Japan.

A method of radiography developed at the Radiation Center of Osaka Prefecture using the photonuclear reaction eliminates the scattered photons generated in the sample. A metal plate is placed at the position occupied by the x-ray film in ordinary radiography, and the object is irradiated with high-energy gamma or x rays. The metal plate is activated only by the components of higher energy than the photonuclear threshold, and scattered photons do not affect the metal plate. After the irradiation, a film is placed in contact with the metal plate for a time and developed by autoradiography technics like those in neutron radiography. The contrast and definition of the picture were shown to be much better than those in ordinary radiography. (MG)

*Abstract of article (in Japanese) by Junichiro Furuta and Eiichi Hiraoka in Journal of N. D. I. (Hihaki Kensa) 17(3): 99-104 (1968).

AEC PARTICIPATION IN THE DEVELOPMENT OF WOOD-PLASTIC COMPOSITES (2)

By Ralph E. Greene

Supplementary Keywords: industry; industry, wood; industry, plastics; review, technical; polymerization; physical property; modification, material; economics; review, historial; pilot-plant scale; plant scale; comparison; cobalt-60.

Abstract: The sponsorship of USAEC's Division of Isotopes Development in the development and evaluation of wood-plastic composites (WPC) is reviewed. Particular attention is given to the industrial evaluation program, conducted under AEC contract to Lockheed-Georgia Company; and process problems including veneer technology, shell (surface) loading technology, surface depletion, and nonuniform impregnation are discussed. The final AEC contracts, which were for the precise evaluation of improvement in physical properties of WPC, are also reviewed briefly.

(Introduction)

At the time of the writing of this review, there are four United States companies (American Novawood Corp., ARCO Chemical Co., Radiation Machinery Corp., and Radiation Technology, Inc.) actively engaged in producing wood-plastic materials. Although the U. S. Atomic Energy Commission was highly instrumental in the development of this new industry, the state of the art of the production of this new material had evolved to such an extent that further developmental support was not warranted and would possibly have been competitive with research sponsored by private capital. Undoubtedly, commercial refinement of both the process and the product has gone well beyond the state where AEC-sponsored development had progressed, but, since this is proprietary information, the latest techniques of production will not be found in the literature until and unless protected by patents.

Nevertheless, importance of the role played by AEC in the development of wood-plastic composites must not be underestimated in the starting of this new industry. Not only has the AEC helped sponsor the development of the product, but it has also conducted studies to evaluate both the physical properties of the material and the economic possibilities of the process. This report will attempt to review the AEC's participation in the entire program.

The preparation of wood-plastic composites (WPC) is basically a simple process---the air in the wood is removed by evacuation, then the wood is impregnated with a monomer, and finally the impregnated wood is irradiated, usually with ^{60}Co, for a time sufficient to completely polymerize the monomer. This gives a new type of product with many enhanced physical properties.

The first mention in the literature of AEC-supported work in this field and probably the first work in the United States, was a brief mention in a 1956 Brookhaven National Laboratory report.[1] This report described a brief attempt to obtain an impregnated wood with increased resistance to moisture and improved dimensional stability. Birch wood was impregnated with methyl methacrylate and irradiated to a total dose of 4.1 Mrad.* The treated

*Original reference listed dose in the now obsolete Mrep units. Conversion based on 1 rad = absorption of 100 ergs of radiation energy/g absorbing material, one rep = absorption of 93 ergs of radiation energy/g absorbing material.

samples contained 30% polymer and swelled the same amount as untreated samples. These workers speculated that if a water-soluble monomer, capable of penetrating the cell walls, were to be polymerized in place to a water-insoluble polymer by gamma radiation, a truly water-insoluble product might be obtained.

In the early 60's, work on the development of wood-plastic combinations was under way at the Engineering Experimental Station, West Virginia University, Morgantown, under the direction of J. A. Kent. In 1961, L. T. Harmison, also at West Virginia University, published a thesis[2] entitled "Gamma Irradiation of Wood: Development of Wood-Plastic Combinations" and work began under Kent on a USAEC Division of Isotopes Development (DID) contract for the preparation of wood-plastic combinations using gamma irradiation to induce polymerization. Kent et al. reported on this work at an AEC-sponsored symposium[3] on radiation-induced polymerization and graft polymerization held at Battelle Memorial Institute in November 1962. In March 1963 Kent et al. published a report[4] covering the period Nov. 1, 1961 to Oct. 31, 1962 on the DID contract work. Ballantine[5] reviewed this work in Isotopes and Radiation Technology. This report covered four phases of the development of WPC: (1) physical testing of WPC; (2) impregnation of wood with monomers; (3) chemical aspects including polymerization rates, dose-rate dependence of polymerization rates, effects of additives, etc.; and (4) the effects of gamma irradiation on certain physical properties of wood. In September of that year (1963) an interim report[6] of contract work was published. This work continued to demonstrate the enhancement of physical properties, shear strength, static bending strength, hardness, compression strength, and the reduction of water absorption and dimensional changes. Extraction of polymers from WPC indicated little if any grafting to the wood substrate in tests up to that time, but the molecular weights of polymers formed in the wood were higher than those in ordinary bulk polymerization. Two other publications by Kent et al.[7,8] also appeared in the 1963 literature and described the preparation of WPC with a variety of woods and monomers.

The work to that time left no doubt as to the improved properties of this new material over untreated wood; however, the economic aspects of the production of WPC had not been evaluated. Therefore DID contracted with Arthur D. Little, Inc. to study the technical and economic considerations for irradiated wood-plastic materials. The findings[9] of this study were published in September 1964 and showed that WPC should find utility in high unit-cost products whose raw-material cost is a small segment of the overall manufacturing cost. These potential applications were identified as those in which the aesthetic qualities of wood constitute an important property in the final application --- for example, specialty flooring, commercial and institutional seating, fabricated units for construction (window sashes and dividers, doors, stair treads, counter tops, etc.), furniture, sporting goods (golf club heads, gunstocks, etc.), and specialty items (cutlery handles and salad bowls). The portion of this total market (about a $1-2 x 10^9/year) that WPC items would be likely to capture was expected to be relatively small and would depend on cost-performance characteristics. This report recommended both a commercial development program and an applied research program to establish the commercial utility of the product. To facilitate end-use testing, Arthur D. Little, Inc. suggested solicitation of possible sample products from manufacturers, treatment of the samples with the most promising monomer at the optimum level of loading, and return of the samples to the potential manufacturer for testing. (This was later done.) A condensed version of the Arthur D. Little report is given in Isotopes and Radiation Technology.[10]

Closely following the Arthur D. Little, Inc. report was a contract report[11] of Air Reduction Company, Inc. on laboratory-scale production of WPC using vinyl chloride liquid monomer both under pressure at room temperature and at -78°C without the use of a pressure vessel. The radiation-processed wood--poly (vinyl chloride) composites showed improved properties in comparison with untreated wood and measurements of several physical properties were made.

Kent et al.[12] in May 1965 again reported on work progressing at West Virginia University exploring additional polymer systems, refining the data on dose rate dependence of the polymerization reaction, incorporating studies of additional species of wood into the program, and continuing the measurement of mechanical properties, including toughness and abrasion resistance, neither of which was previously investigated.

Further studies with carbon tetrachloride as a promoter for the radiation polymerization of methyl methacrylate showed that important reductions in radiation requirements were possible* and a number of polymer dyes were investigated to determine their effects on the appearance of wood-plastic combinations. It was found that many dyes accentuate the wood grain while at the same time imparting attractive colors to the wood.

Industrial interest continued to grow and in September 1965 the Atomic Industrial Forum in cooperation with the U. S. Atomic Energy Commission sponsored an information meeting at Chicago on irradiated wood-plastic materials. Proceedings[13] of this meeting were available in March 1966. In addition to reviews of AEC-sponsored work, papers were presented by representatives of plastics, furniture, plywood, sporting goods, engineering, and wood-plastic manufacturing companies.

Between December 1965 and June 1966 three AEC contract reports on commercialization studies in the Northeast,[14] South,[15] and Pacific Northwest and Great Lakes Regions[16] of the United States were published. Another contract for an engineering study and cost analysis leading to a conceptual design for a small-scale pilot plant for the processing of plastic-impregnated wood was completed[17] in June 1966.

Industrial Evaluation of Radiation-Processed WPC (3)

While these studies were going on, DID had contracted (on the basis of competitive bids) with Lockheed-Georgia Company to conduct a cooperative Government-industry

*Physical properties of WPC prepared with CCl_4 promoter were not given.

program for the evaluation of radiation-processed wood plastics in a variety of end-product applications. This contract was what might be termed a "proof of the pudding" project.

On July 16, 1965, the AEC issued an invitation to the wood-products industry to evaluate radiation-processed wood-plastic materials. Responses to this announcement and requests for participation in the program were received from 181 companies. The responses were classified into 24 categories, and companies were selected to allow representation in the program for the largest possible cross section of product applications. Of the 78 companies selected by the AEC (see Table 3 at the end of this review) for participation, six elected to withdraw, three did not send wood for processing, and one submitted a nonwood material that was not processed because of technical difficulties; therefore, 68 companies participated in all phases of the program. Each of these supplied wood to be processed into WPC, which was then returned to the suppliers. Participants, in turn, returned to the Lockheed-Georgia Company an evaluation of the products, based in many instances on results obtained by applying the same standard production techniques as for untreated wood of the same or similar species. The findings of this evaluation[18] are presented in some detail, and process problems and the technology needing further development are discussed.

In the Lockheed program, methyl methacrylate was used exclusively as the monomer and all wood was given a full impregnation, which results in a high plastic content in the resultant WPC. Background information was not adequate to allow changes in the impregnation process to control monomer loading, and the large quantity of wood processed required treatment of several species from several companies in each process run.

Over 8000 lb of WPC, involving 41 woods, was processed in this program. Wood forms treated included rough and planed lumber, dimensioned parts, plywood, multilayer laminates, and veneers. Wood sizes ranged from 5 in. by 7 in. by 5 ft to 3/32 by 7/16 by 2 in. Approximately 20 board feet

(or equivalent) was processed for each participating company. Participants were asked to supply kiln-dried wood so that at least one processing variable could be eliminated from the program analysis. For all processed batches, selected samples were weighed at Lockheed before and after treatment to provide estimates of process quality control. No work was done on the treated material by Lockheed except that a number of pieces were planed after processing to remove surface variations so that the treatment could be evaluated visually. All treated material was returned to the respective participants for their evaluation. No special equipment was used in processing any wood; special equipment was indicated for only one material---veneers less than 1/16 in. thick. Few data were available for processing veneers at that time, and no work had been done with sizable pieces. However, participant demand for these materials precluded their exclusion from the program.

The results of the evaluation program are briefly summarized in Tables 1 and 2. In Table 1 an entry under the "Yes" column for "Material Acceptable" indicates that the WPC material showed properties that would be suitable for the specific application of the particular company (designated by number). The "Partly" column shows companies that found the material acceptable for limited use in their product or that felt some problem must be solved before the material could become acceptable. The "No" column obviously indicates companies that found the material unsatisfactory for their specific applications. An entry under the "Yes" column for "Cost Acceptable" indicates that a cost of $1.50 per full board foot for WPC can be tolerated in the specific application.

Table 1 Suitability of Wood-Plastic Combinations for Product Applications†

Product	Material Acceptable			Cost Acceptable ($1.50 bd ft)			Evaluation Incomplete
	Yes	Partly	No	Yes	Maybe	No	
Cabinets							
Bank & store fixtures							61
Store display	60				60*		
T.V. & stereo			40			40	
Flooring							
Solid lumber					62	49	62, 51, 49
Truck decks	14					14	49
Veneer			77			77	
Furniture							
Household, case goods			11			11	
Household, juvenile			18		18*		
Household, solid wood		11, 24, 8			24, 11	8	
Laboratory		33				33	
Office	39			39			
Outdoor tables				36			36
Restaurant			56		56*		
School, tablet arms			43		43		
Stadium seats		3			3*, 62		3, 62
Veneer overlays & inlays		11, 36		36	11*		
Gift Items		48	76		48*, 76*		
Gunstocks		55			55*		69
Handles							
Brush	44				44*		
Cutlery	35			35			
Garden tool, small	67					67	
Putty knife	50				50*		
Shovel			66			66	
Striking tool, ax, hammer	66		41			41, 66	
Millwork							
Furniture parts	78				78		
Stair treads							49
Windows			52		52		
Miscellaneous							
Architectural grilles		16				16	
Beverage cases			59		59*		

Table 1 (continued)

Product	Material Acceptable			Cost Acceptable ($1.50 bd ft)			Evaluation Incomplete
	Yes	Partly	No	Yes	Maybe	No	
Miscellaneous (Continued)							
Casket parts			64		64*		
Cooling tower parts						21	21
Concrete forms			49		49*		
Cutting boards		5			5*		
Door knobs		55, 57			55*, 57*		
Drop hammer boards							17
Dry kiln spacer sticks							49
Ladder rails			25		25*		
Picture frames		7				7	
Printing plate mounts			54			54	
Railroad crossing timbers							6
Rules, log & cordwood	71			71			71
Signs, carved outdoor	71			71			71
Shoe heels			75			75	
Shoe lasts			68		68*		
Suction box covers			47		47*		
Templates, carving machine	42				42*		
Trusses, structural							63
Yacht parts		53			53*		
Musical Instruments							
Clarinet bodies		13			13*		
Guitar parts	27				27*		27
Organ & piano parts							34
Recorders (woodwinds)	72				72*		72
Plywood & Veneer							
Plywood panels		30	26, 70		30*, 26*, 70		
Veneer, moulded	38	32		38	32*		
Veneer, loose		9	26, 70		9, 26*, 70*		
Sports Equipment							
Baseball bats			1		1		
Billiard equipment		12			12		
Candlepins			2		2*		
Golf club heads			15		15*		
Water skis			73		73*		
Textile Machinery							
Bobbins		45			45*		
Picker aprons		10			10*		10
Picker sticks							29, 65

† Numbers designate individual companies listed in table 3 at the end of this review

* Did not comment on cost of material

Table 2 EVALUATIONS OF WPC CHARACTERISTICS

Characteristic	Number Of Companies			
	Acceptable	Partly Acceptable	Not Acceptable	No Comment
Machinability				
Sawing	27	2	0	39
Planing	21	1	0	46
Sanding	31	0	2	35
Turning, carving, etc.	25	6	2	35
Drilling	11	4	3	50
Adhesive Bonding	12	0	2	54
Compatibility*	9	0	7	52
Weight Increase	3	12	14	39
Moisture Absorption And Stability	15	6	3	44
Uniformity Of Plastic Loading	0	1	10	57
Warpage	3	0	8	57
Stain Resistance	3	0	8	57
Cost	5	6	16	41

* Compatibility of WPC processing with conventionally bonded materials.

Properties Evaluated (4)

Pertinent properties common to many evaluations are shown in the first column of Table 2. The figures give the number of companies that found a particular property acceptable, partly acceptable, or not acceptable, or offered no comment. Considerable interpretation by Lockheed was necessary to classify the comments on properties affecting fabrication.

Machining Properties. (5) Most participants found the machining properties of WPC satisfactory and in some cases, excellent. Some adjustment in normal woodworking procedures was frequently necessary. Greater power was required; sharp cutting edges were essential, making carbide tools highly desirable; and slower feed rates were required because of the increased hardness of WPC. Greatest difficulty was experienced in drilling because the bit became clogged with WPC drillings. Heat softened the plastic, further accentuating the clogging. Changes in feed rate and type of drill bit helped to decrease the problem so that WPC could be successfully drilled. Over 90% of the participants who commented on sanding were able to sand WPC satisfactorily; however, some found that results were best with sharp abrasives (silicon carbide) and that adjustments in feed rates and depth of cut were desirable, expecially for drum sanders.

Adhesive Bonding. (5) The principal difficulties associated with adhesive bonding were experienced with materials that were bonded or laminated before being converted to WPC; many participants reported delamination, splitting, or cracking at the glue line. Results suggest that, for this type of construction, bonding must be performed after the wood is processed.

Most participants reported success in obtaining good adhesive bonds to the processed material; however, these successes were accomplished with epoxy, phenol-resorcinol, and polyvinyl acetate adhesives; melamine and urea adhesives gave generally poor results.

Loos and Kent,[19] in work subsequent to the Lockheed evaluation, studied the fastening of wood-plastic combinations by both adhesives and mechanical fasteners. They found that resorcinol-based adhesives gave the best results of the glues tested; poly (vinyl acetate), urea--formaldehyde, and casein adhesives formed satisfactory glue bonds with WPC as long as the polymer loading was not too high. Poly (vinyl acetate) and urea--formaldehyde formed a better bond when the moisture content of the WPC was low, and the authors suggest that some formulation adjustments to match the moisture diffusion rate of the glue to that of the WPC would probably improve bonding properties.

(5)
Mechanical Fastenings. Standard wood-fastening techniques must be modified when used for WPC. The taper of a conventional wood screw requires a matching pilot hole; otherwise the straight unthreaded portion of the shank tends to split the WPC. Results were best with straight-shank sheet-metal screws, although close control of the pilot-hole size was required. Several participants reported that the screw-holding power of WPC was superior to that of wood. Nailing of WPC was unsatisfactory because of splitting, but only two participants stated that the lack of nailability would be a primary consideration.

Loos and Kent[19] also found mechanical fasteners, i.e., wood screws and other threaded fasteners, quite satisfactory for WPC. They, too, did not advise nailing. Three threaded type inserts as well as a standard tapped hole and bolt were evaluated, and all gave high performance in fastening WPC.

(5)
Weight Increase. Somewhat more than half of the participants offered no comment on the greater weight of WPC. About 40% thought that the increase in weight was either not acceptable or only partly acceptable, while less than 5% found the weight increase acceptable. One of the main objections to the greater weight was the related increase in shipping cost. Some other objections were that for some hand tools and sporting goods the item was too heavy for easy handling or the balance was changed. Two rather amusing comments were received from manufacturers of bowling pins and water skis---the WPC candlepins were almost too heavy to knock over, and the water skis were too heavy to float.

(5)
Other Properties. The majority of comments on moisture resistance indicated it to be satisfactory. Of the three participants who disqualified the material because of moisture absorption, two could tolerate essentially no moisture absorption in their product. It should be mentioned, however, that the moisture absorption rate for WPC is less than that for untreated wood.

Data on chemical and stain resistance of WPC materials were reported by three participants. A laboratory-furniture manufacturer reported that the effects of short exposures to common laboratory chemicals, except for strong bases and some strong acids, were easily removed by light sanding and buffing. Two companies who evaluated the resistance of WPC to long exposures to 30 common materials found it to be unaffected by 21 of these materials but stained somewhat by nine highly colored materials.

Warpage was reported by a few companies; however, experience indicates that warpage in solid stock generally is not a problem.

Veneers (4)

Interest in veneers was high, but the 13 companies who submitted veneer samples for processing almost all reported the processed veneers to be unsatisfactory. Most veneer was submitted as a single sheet for processing, but some manufacturers submitted the veneer already bonded to a backing material. Those companies that were able to bond and work the veneer successfully reported favorably on the increased hardness, strength, and abrasion resistance. The most frequent comment was that the veneers warped, curled, or split during working. Surface effects---variations in monomer loading at the surface on veneers less than 1/16 in. thick--- were difficult to remove, and some participants reported sanding through the veneer in attempts to remove these surface blemishes. Bonding of veneer to core material gave some trouble: resorcinol adhesive bled through the veneer, and urea and melamine adhesives caused swelling and blistering. However, epoxy adhesives gave good results. Some participants, by modifying standard techniques, were able to fabricate the more rigid WPC veneers; for example, one participant used a hot press to soften and flatten the

veneer, and another used heat to edge-bond a circular surface with WPC veneer and to mold the veneer into an irregular shape.

It must be realized that there has been little development in the technique of working with the thin and fragile WPC veneers and no attempt was made to provide special devices for handling these materials in this program.

Cost (4)

In the Lockheed evaluation, a cost of $1.50 per full board foot was used. This cost is the same as the minimum developed in the Vitro Engineering evaluation.[17] The Vitro economic evaluations of product costs based on a 3000-lb/hr production facility indicate that the impregnation and radiation costs for the methyl methacrylate would be ~$0.035 per pound. Monomer costs for methyl methacrylate formulations would be ~$0.086 per pound of product. Total conversion costs (excluding wood cost) would be ~$0.121 per pound, resulting in a cost per board foot (5 lb/bd ft), for methyl methacrylate-wood combination, of $0.60 (excluding wood cost). With the assumption that average wood costs are $0.35 per board foot, the total product cost (less marketing cost and profit) would be $0.95 per board foot. The additional costs for marketing and profit are, of course, related to the individual processor's traditional method of accounting, but for estimating purposes the projected costs ranged between $1.50 and $2.50 per board foot for a broad range of wood species.

Kent et al.[20,21] have examined other polymer systems, the incorporation of additives into the monomers, and the relation of dose rate to total dose required for complete polymerization in order to obtain possible reductions in the cost of WPC as well as to achieve other advantages. They found that in the systems studied the radiation dose required was a function of the 0.3 power of the radiation intensity. They also found that using some

different monomer additives could reduce some costs; however, the physical properties of such systems have not been evaluated.

Process Problems (3)

As a result of the evaluation program conducted by Lockheed, it becomes apparent that widespread application and commercialization of the WPC process depends heavily on the reduction of two factors which are integrally related---cost and weight. Since one board foot of WPC costs, with marketing and profit, between $1.50 and $2.50 and contains 2 lb or more of plastic, both weight and cost would be significantly reduced if only the outer or top surface of the wood were impregnated with plastic. Development of two technologies---veneer and shell loading (fully impregnated wood surface)---offers a solution to this problem.

WPC Veneer Technology (4)

Both the weight and cost would be significantly decreased in a veneer or paneling with only a top layer of WPC.

Although the cost would not be decreased in direct proportion to the thickness of WPC veneer used, the cost should be much less than the $1.50 per board foot. Rohrmann[16] estimated the cost of WPC veneer using a more expensive monomer, isobutyl methacrylate, to be $0.12 per square foot for a 1/24-in. thickness, exclusive of the cost of the veneer. Also, the finishing costs for WPC veneer would very possibly be less than those for conventional veneer. He also reports that quality furniture producers who were contacted stated that if the color, hardness, and general improved durability of the WPC could be ensured throughout the veneer sheet, an additional cost of $0.10 to $0.20 per square foot could be tolerated.

Boyle et al.[22] have recently demonstrated ability to produce veneers by irradiation of a stack of impregnated veneer sheets separated by Saran Wrap. The stack was clamped between sheets of glass during the irradiation. The treated veneer was stiffer than untreated stock and somewhat more brittle across the grain; however, surface depletion was slight and a good surface luster could be obtained with light sanding.

The weight increase from a thin WPC surface layer of veneer, i. e., 1 to 2 oz/ft^2 would scarcely be noticed. Not only does the use of a WPC surface veneer make the product less costly to fabricate as compared to clear-through impregnation, but also the lighter weight maintains shipping costs comparable with those of conventional products.

Still another advantage of WPC surface veneer is that fewer conventional woodworking techniques would need to be changed. The thin WPC surface layer should not dull tools as quickly as solid WPC during cutting, and many of the fastenings and bondings would be made on the untreated side, where conventional practices could still be followed.

Shell Loading Technology (4)

In preparing irregular shapes of WPC materials, some of the same advantages of WPC-surfaced veneers could be achieved if the impregnation of wood shapes could be limited to a 1/8- to 1/4-in. surface layer. This would, of course, decrease the weight and cost of monomer as compared to fully impregnated WPC items; yet the product would retain many of the advantages of fully impregnated WPC, e. g., surface hardness, abrasion resistance, and depth of finish. The participants that submitted gunstocks for treatment were concerned about either the total weight or the uniformity of the weight increase. Shell-type monomer loading should find application in some solid furniture pieces, sporting goods (baseball bats, bowling pins), and other pre-shaped wood items (scroll work, salad bowls, or door knobs).

Kent et al.[23] at West Virginia University have done some development on shell loading. They find that some polymer should be in the core to prevent the more heavily loaded outer layers from "shelling-off," which has been observed in the use of thermosetting plastics for the shell treatment of bowling pins. Polymer distribution in a shell-loaded loblolly pine sapwood specimen is shown in Fig. 1.

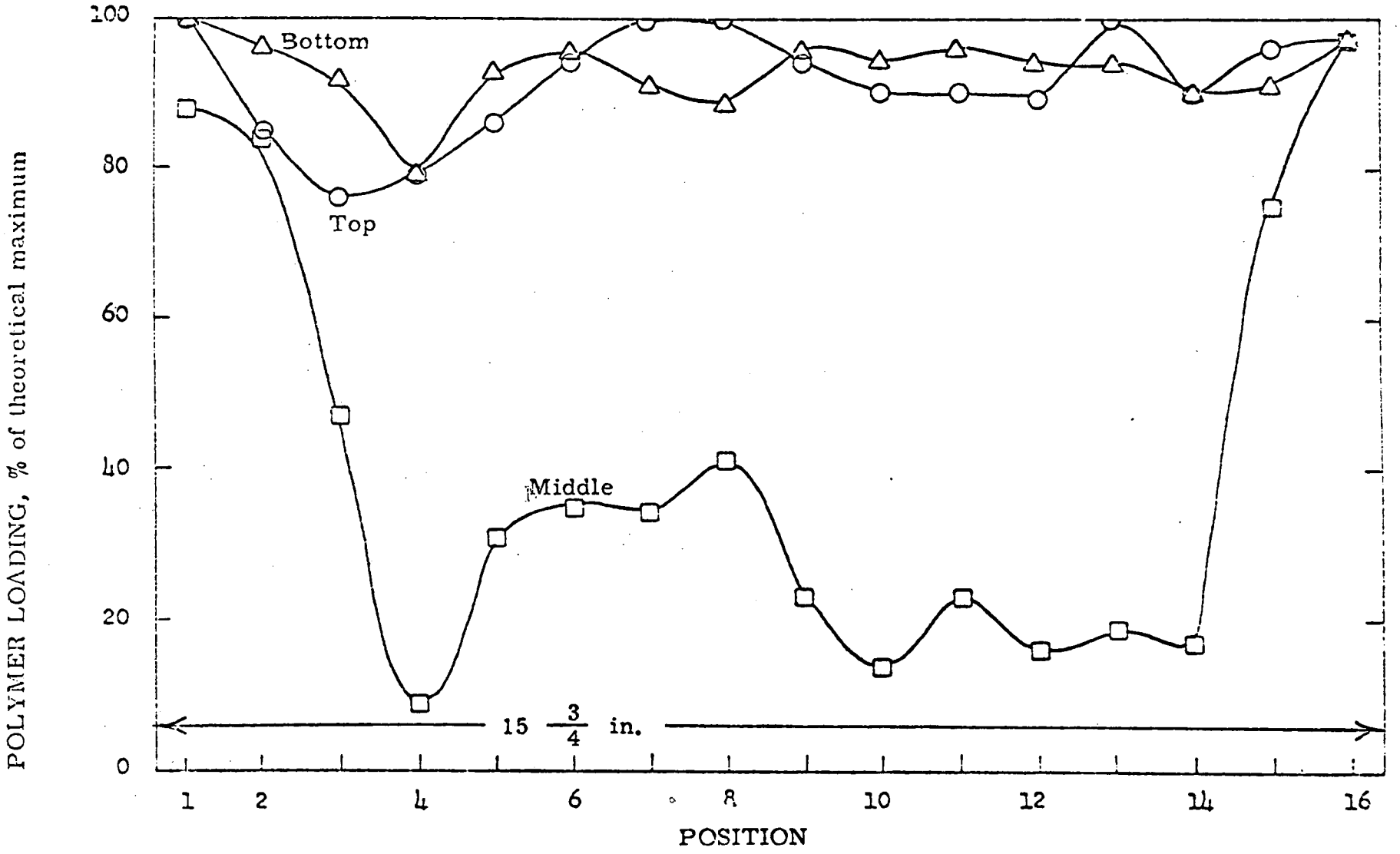

Fig. 1 Polymer loading distribution obtained with methyl methacrylate in loblolly pine sapwood. Specimen. $1\frac{3}{4}$ by $1\frac{3}{4}$ by $15\frac{3}{4}$ in.

Surface Depletion (4)

Although the WPC process is quite satisfactory for many items made from solid lumber and finished to dimension after processing, there still remains a problem of surface depletion of monomer that is particularly noticeable and destructive to veneer and preshaped solid pieces of WPC. This layer is lighter in color and lower in density than fully impregnated wood and usually extends 1/32 to 1/8 in. into wood surfaces parallel and tangential to the grain direction, and from 1/8 to 1/2 in. into surfaces perpendicular to the grain direction (end grain). This depleted layer must be removed to reach the fully impregnated wood, and in some cases with veneer, the top layer may be sanded through before fully impregnated material is reached.

This surface depletion effect[16-18] is undoubtedly related to the volatility of the methyl methacrylate monomer (b.p. ~212°F). The heat of polymerization contributes to this problem, and Vitro Engineering[17] made rather extensive studies of temperature increase during polymerization, probability of a runaway reaction, control of temperature, and heat transfer analysis. Unpackaged wood presents the best possible arrangement for heat transfer; this arrangement is unsatisfactory, however, because monomer transport from the wood to the irradiation cell can result in a deposit of polymer on all surfaces within the irradiation chamber. The Vitro conceptual designs of both a pilot facility and production facility recommend metal product containers cooled by a water spray as they pass the source. To confirm their engineering conclusions, Vitro had Lockheed-Georgia perform four large-scale experiments with a product

carrier typical of the size considered in the Vitro report so that the experimental data could be directly related to the Vitro facility design. In all four of the tests the maximum temperatures reached were in excess of 200°F (from 230°F to a high of 277°F). The conclusions about heat release problems and the resulting plant design were substantiated by these experiments, and Vitro concluded that a zoned radiation source using water cooling is the best possible choice for a plant design.

One problem related to cooling the product carriers with water while in the radiation zone is whether or not some of the monomer, volatilized from the impregnated wood by the heat of polymerization, will condense on the water-cooled surface, and, being in the radiation zone, polymerize on this surface. With repeated use any buildup of polymer would seriously alter the heat-transfer characteristics of the product carriers; therefore, routine maintenance procedures will be required to remove polymer buildup. This problem will probably exist with volatile monomers where any type of cooling may be used in the radiation zone.

Rohrmann[16] suggests the use of a less volatile monomer, for example isobutyl methacrylate (b.p. ~311°F as compared to ~212°F for methyl methacrylate), for veneers and preshaped pieces. In a single small-scale test at Battelle-Northwest,[16] veneers were processed in a simple manner with radiation, using isobutyl methacrylate to prepare specimens of fully impregnated 1/24-in.-thick veneer with essentially no surface or end-grain depletion; however, Rohrmann emphasizes that this was a single small-scale test, and the process cannot be claimed as suitable for veneers.

Kent et al.[20] have shown that certain additives (plasticizers) can lower the heat of polymerization in some monomer systems and in some systems may significantly reduce the radiation requirements. However, they indicate that the physical properties of a WPC with high plasticizer concentration need to be evaluated.

Nonuniform Impregnation (4)

Another process problem mentioned by many participants was inadequate impregnation of wood pieces---either the weight gain was too small or the wood was not uniformly impregnated. Currently available research and development results do not, for all species of commercial interest, provide adequate data for (1) impregnation characteristics of each wood species with respect to uniformity of monomer distribution, (2) range of plastic loadings characteristic of full-cell impregnation for each species, (3) processing cycles tailored to each wood species for thermoplastic monomers, and (4) estimates of the percentage of adequately treated material normally achieved in processing randomly selected woods of each species. Undoubtedly, commercial producers are acquiring these data as needed.

Recommendations and Conclusions from Evaluations (3)

The one single factor common to many of the reports[14-18] was the recognition and interest, especially by furniture manufacturers, in the development of WPC veneer. Many of the furniture workers feel that this is the economical way of applying WPC to their products. Once this technique is developed, the use of WPC for edging strips, legs, etc. will probably be more widely accepted. Although these reports indicate that much is still to be done in developing WPC veneer techniques, the possibility exists that the art of producing these veneers is more advanced than reported. In any case the true state of veneer development is difficult to assess because some of this work is undoubtedly being done by commercial WPC producers and the results are therefore unavailable.

The use of WPC for flooring was considered in all three regional commercialization reports[14-16] as well as in the Arthur D. Little, Inc., report.[9] WPC appears to have good physical properties for

flooring, and there are no apparent technical problems in manufacturing and installation. Cost appeared to be the main deterrent to its widespread use. Obviously the problems of cost, surface depletion, nonuniform impregnation, and weight have been solved for the production of parquet WPC flooring, since four companies are now commercially producing this product. These companies with the trade names of their products are: The American Novawood Corporation (Gammapar); ARCO Chemical Company---a subsidiary of Atlantic Richfield Company (PermaGrain); Radiation Machinery Corporation (Gammite); and Radiation Technology, Inc. (Radwood).

Vitro concluded from their study that there are sufficient research data available to proceed with the design and construction of a pilot-plant WPC facility. The plant of their conceptual design can accommodate a five-fold increase---from 200 to 1000 lb/hr. They believe that a production plant of 3000 lb/hr capacity or larger is also feasible, but there was no indication of such a need at the time of their investigation. How much, if any, of Vitro's engineering went into the four commercial plants now in existence is not generally known, but undoubtedly the Vitro report was examined. One company, The American Novawood Corporation, actually started commercial production with ^{60}Co before the Vitro report[17] became available in June 1966.

Lockheed concluded that duplication of the evaluation program with different participants was not indicated at the time their report was published because the technology of WPC had not advanced sufficiently to ensure that such evaluations would produce anything other than the same comments and data derived from the first program. Almost half the companies expressed interest in participating in a "follow-on" evaluation, and worthwhile data could probably be derived from such a program with a limited number of companies from the present program. Lockheed recommended that such a program be conducted, oriented toward the reduction of surface effects, production of WPC veneers, and improvement of impregnation technology.

Final Contracts (3)

The USAEC Division of Isotopes Development concluded its sponsorship of WPC development with two contracts awarded to Research Triangle Institute and West Virginia University, respectively, to conduct a study that would more precisely evaluate the improvement in the physical and mechanical properties of wood-plastic combinations as compared with untreated wood. Research Triangle Institute subcontracted part of this cooperative effort to North Carolina State University.

For this physical-mechanical property evaluation North Carolina State University both collected and tested the specimens, West Virginia University did the impregnation and irradiation,[22] and Research Triangle Institute performed the data analysis.[24]

The basic objective of this research was to assess the nature and magnitude of the changes in a selected group of physical and mechanical properties measured on certain wood-plastic combinations as a function of the polymer loading, i.e., the amount of polymer in the wood relative to the maximum possible amount.

The scope of this study was intended to be as comprehensive as possible by including as many monomer systems and tests of the physical and mechanical properties of wood as seemed feasible.

The four monomer systems selected were methyl methacrylate (100%), methyl methacrylate (88%) - Phosgard*(12%), styrene (60%) - acrylonitrile (40%), and ethyl acrylate (80%) - acrylonitrile (20%).

Four nominal loadings of each of the four monomer systems were used in treating the specimens. Based on the theoretical void volume available, the desired monomer loadings were 0%, 33%, 66%, and 100% of maximum loading. In addition, unimpregnated, unirradiated controls were included. A ^{60}Co source was used to effect polymerization. The tests (including many standard tests and selected to give as much information as possible about the changes in the properties of wood with the addition of the plastics) were static bending, vibration (dynamic modulus of elasticity), compression perpendicular to the grain, tension perpendicular to the grain,

*Flame retardant organophosphorus compound.

toughness, hardness, abrasion, and dimensional change in water vapor (anti-swell efficiency and rate of change).

In the selection of species for this study, consideration was given to woods that were well known and commonly used, represented both the hardwood and softwood groups, possessed different density ranges, varied in penetrability, and possessed the possibility of being upgraded or improved by the addition of a plastic. The species selected were loblolly pine (Pinus taeda), eastern white pine (Pinus strobus), yellow poplar (Liriodendron tulipifera), and northern red oak (Quercus rubra).

Compared with earlier work, this series of tests was much more comprehensive. More species of trees, more monomer formulations, and a broader spectrum of physical-mechanical tests were investigated to provide a basis for the comparative evaluation of the influence of wood species, monomer formulation, and polymer loading on mechanical and physical properties of wood-plastic combinations. It is recognized and emphasized, however, that the series of tests and comparisons was not all inclusive---others could have been proposed that would be quite valuable for particular applications.

A statistical analysis of the results of these tests established trends of the modification of mechanical properties as a function of loading.

Properties tested were of interest in a wide variety of applications. The static bending tests indicate the stiffness and breaking strength in bending of the various wood-plastic combinations at different levels of loading. This information is of particular value in structural and furniture design. Increase in toughness is of value where impact strength is important, e.g., sporting goods, tool handles, etc. Abrasion resistance and hardness are of particular value in flooring, furniture, and paneling. Compression perpendicular to the grain is important in structural design and general utility and tension perpendicular to the grain is related to the ease of splitting of the material. The results from the rate /dimensional change in water vapor tests should be of interest to most users of wood, especially those in flooring and furniture manufacture. The

relatively poor dimensional stability of wood (with respect to moisture) is one of its most limiting characteristics. The vibration test is not presently in wide use, but it reveals information that may be useful in nondestructive testing of wood-plastic combinations. The particular combination of properties obtained in wood-plastic combinations may also suggest applications for the material for which wood is not now used.

The greatest improvement in properties of wood polymer as compared to untreated wood was achieved for the following: side hardness (up to 11-fold increase), abrasion resistance (up to 7-fold increase), and compression perpendicular to grain (up to 6-fold increase).

Perhaps the most interesting results were the high anti-swell efficiencies of the wood-styrene and acrylonitrile combinations. The efficiencies were up to 60-70%---100% would indicate no swelling of the wood polymer.

It is apparent from the results of this study that wood-plastic composites possess a unique set of properties in comparison to other improved wood products. Perhaps the most salient feature of the composites is that strength increases, together with excellent dimensional stability, can be achieved without reduction of toughness or abrasion resistance which is found in most other forms of improved wood. In fact, in certain specific composites, toughness and abrasion resistance can be enhanced.

A disadvantage of the wood-polymer composite systems, of the type studied in this investigation,[22,24] is the high added polymer content which is required to attain the maximum property value. In this regard, except for surface hardness and related properties, the enhancement of mechanical strength and stiffness is not especially efficient in terms of the amount of added polymer required.

This disadvantage again emphasizes that commercial exploitation of WPC will have its greatest potential with the development of technology for production of veneers, surface-treated (shell-loaded) materials, or where only thin sections of WPC are required---for example, in flooring where the total thickness of the parquet tile is about one-fourth inch. Fully loaded, massive shapes will probably be economically feasible only in special applications. Nevertheless, the fact that four companies are now commercially producing WPC attests to the merits of the product. Again it is stressed that the technology developed by the commercial manufacturers, which is of a proprietary nature, probably far exceeds that developed under AEC sponsorship.

Table 3 COMPANIES SELECTED FOR PARTICIPATION

No.	Company	No.	Company	No.	Company
1	Adirondack Bats, Inc. Dolgeville, N. Y.	11	Otis L. Broyhill Furniture Company Marion, N. C.	24	Founders Furniture Co. Pleasant Garden, N. C.
2	American Products, Inc. Central Falls, R. I.	12	Brunswick Corporation Muskegon, Mich.	25	Gamble Brothers, Inc. Louisville, Ky.
3	American Seating Co. Grand Rapids, Mich.	13	C. G. Conn, Ltd. Elkhart, Ind.	26	Georgia-Pacific Corp. Savannah, Ga.
4	Andersen Corporation* Bayport, Minn.	14	F. C. Cook & Co., Inc. Buckhannon, W. Va.	27	Gibson, Inc. Kalamazoo, Mich.
5	Anderson-Tully Company Memphis, Tenn.	15	Charles Cox Corp. Memphis, Tenn.	28	Goshen Mfg. Co.† Goshen, Ind.
6	Atcheson, Topeka And Sante Fe Railroad Chicago, Ill.	16	Customwood Mfg. Co. Albuquerque, N. M.	29	E. H. Jacobs Mfg. Co. Charlotte, N. C.
7	Bassons Picture Framing Co. Perth Amboy, N. J.	17	Detroit Drop Hammer Board Company Detroit, Mich.	30	Jamestown Veneer & Plywood Corp. Jamestown, N. Y.
8	Baumritter Corporation New York, N. Y.	18	Eisen Brothers, Inc. Hoboken, N. J.	31	George O. Jenkins Co.** Bridgewater, Mass.
9	Boise Cascade Product Development Boise, Idaho	19	EKCO Housewares Co.† Franklin Park, Ill.	32	Keller Products, Inc. Manchester, N. H.
10	Bowman-Dunn Mfg. Co. Charlotte, N. C.	20	Excel Corporation † Elkhart, Ind.	33	Kewaunee Technical Furniture Company Statesville, N. C.
		21	Fluor Products Co., Inc. Santa Rosa, Calif.	34	W. W. Kimball Co. Jasper, Ind.
		22	Foldoor & Surfaces, Inc.* Cleveland, Ohio	35	Kirwick Industries Wickliffe, Ohio
		23	Forest Lumber Company † Pittsburgh, Penn.		

Table 3 (Cont.)

No.	Company	No.	Company	No.	Company
36	Knoll Products Division East Greenville, Penn.	51	Robbins Flooring Company White Lake, Wisconsin	66	True Temper Corporation Cleveland, Ohio
37	Leisters Furniture, Inc.* Hanover, Pa.	52	Rolscreen Company Pella, Iowa	67	Union Fork & Hoe Co. Columbus, Ohio
38	Wilhelm G. Loeffler & Associates Albany, Ore.	53	Rybovich & Sons Boat Works, Inc. West Palm Beach, Fla.	68	United Shoe Machinery Corporation Beverly, Mass.
39	Lycoming Industries Williamsport, Penn.	54	Sandberg Manufacturing Co. Chicago, Ill.	69	U. S. Army Rock Island Arsenal Rock Island, Ill.
40	The Magnavox Company Ft. Wayne, Ind.	55	Savage Arms/Emhart Corp. Westfield, Mass.	70	United States Plywood Corporation New York, N. Y.
41	Marion Handle Mills Loudon, Tenn.	56	Schafer Bros., Inc. Los Angeles, Calif.	71	Vinyards Shop West Milan, N. H.
42	Carlton McLendon Furniture Company Montgomery, Ala.	57	Schlage Lock Company San Francisco, Calif.	72	Friedrich Von Huene Brookline, Mass.
43	Herman Miller, Inc. Zeeland, Mich.	58	T. Shriver & Company, Inc.† Harrison, N. J.	73	Western Wood Mfg. Co. Portland, Ore.
44	Nashua Wood Products, Inc Nashua, N. H.	59	Southern Wooden Box Jonesboro, Ark.	74	Weyerhaeuser Company Seattle, Wash.
45	New England Bobbin & Shuttle Company Nashua, N. H.	60	Store Kraft, Inc. Beatrice, Neb.	75	Wilner Wood Products Co. Norway, Me.
46	Northern Engraving Co.† Sparta, Wisconsin	61	Superior Cabinet Works New Orleans, La.	76	Woodland Studios Perryville, Mo.
47	Plunkett-Webster Lumber Company, Inc. New Rochelle, N. Y.	62	Temple Industries Diboll, Texas	77	Wood-Mosaic Corporation Louisville, Ky.
48	Polan Industries, Inc. Huntington, W. Va.	63	Timber Structures, Inc. Portland, Ore.	78	W. R. Wrape Stave Co., Incorporated Little Rock, Ark.
49	Potlatch Forests, Inc. Lewiston, Idaho	64	Toccoa Casket Company Toccoa, Ga.		
50	Red Devil Tools Union, N. J.	65	Tranoco, Inc. Travelers Rest, S. C.		

* Did not submit material for processing

* *Technical problems delayed evaluation

† Elected not to participate

References (3)

1. D. S. Ballantine and B. Manowitz, Progress Report on Fission Products Utilization. VIII. Studies on the Use of Radiation as a Catalyst for Chemical Reactions, USAEC Report BNL-389, p. 19, Brookhaven National Laboratory, May 1956.
2. L. T. Harmison, Gamma Irradiation of Wood: Development of Wood-Plastic Combinations, West Virginia University, 1961. (Thesis)
3. J. A. Kent, A. W. Winston, W. R. Boyle, and L. W[T]. Harmison, Preparation of Wood-Plastic Combinations Using Gamma Radiation to Induce Polymerization, in Proceedings of a Symposium on Radiation-Induced Polymerization and Graft Polymerization, Battelle Memorial Institute, Columbus, Nov. 29-30, 1962, pp. 335-44, USAEC Report TID-7643, November 1962.
4. J. A. Kent, A. Winston, and W. R. Boyle, Preparation of Wood-Plastic Combinations Using Gamma Radiation to Induce Polymerization; Effects of Gamma Radiation on Wood, USAEC Report ORO-600, West Virginia University, March 1, 1963.
5. D. S. Ballantine, Use of Gamma Radiation to Produce Wood-Plastic Combinations, Isotop. Radiat. Technol. 1(2): 189-95, Winter 1963-1964.
6. J. A. Kent, A. Winston, and W. R. Boyle, Preparation of Wood-Plastic Combinations Using Gamma Radiation to Induce Polymerization, USAEC Report ORO-612, West Virginia University, September 1, 1963.
7. J. A. Kent, A. Winston, and W. Boyle, Modification of Wood with Polymers Formed by High Energy Radiation, USAEC Report TID-18907, West Virginia University, August 6, 1963.
8. A. Winston, W. Boyle, J. A. Kent, G. T. C. Li, W. B. Glenn, and L. D. Hall, Radiation Polymerization of Vinyl Monomers in Wood Substrates, Trans. Amer. Nucl. Soc. 6: 414-5, 1963.
9. F. D. Iannazzi, P. L. Levins, F. G. Perry, Jr., and R. S. Lindstrom, Technical and Economic Considerations for an Irradiated Wood-Plastic Material, USAEC Report TID-21434, Arthur D. Little, Inc., September 1, 1964.
10. Technical and Economic Considerations for an Irradiated Wood-Plastic Material, Isotop. Radiat. Technol. 3(2): 131-43, 146, Winter 1965-1966.
11. A. M. Feibush, Research on Applications of Radiation-Induced Reactions in Gases, USAEC Report NYO-3334-1, Air Reduction Company, Inc., February 12, 1965.
12. J. A. Kent, A. Winston, W. R. Boyle, W. Loos, and J. E. Ayres, Preparation of Wood-Plastic Combinations Using Gamma Radiation to Induce Polymerization, USAEC Report ORO-628, West Virginia University, May 14, 1965.
13. R. E. Greene and P. S. Baker (Eds.), Proceedings of Information Meeting on Irradiated Wood-Plastic Materials Held at Conrad Hilton Hotel, Chicago,

Illinois September 15, 1965, USAEC Report ORNL-IIC-7, Oak Ridge National Laboratory, March 1966.

14. J. C. Evans, D. M. Egan, P. R. McDonald, C. H. Collins, and J. Knopp, Commercialization Studies on Wood-Plastic Combinations Process, USAEC Report NYO-3569-1, Western New York Nuclear Research Center, Inc., December 17, 1965.

15. The Southern Interstate Nuclear Board, Commercialization of the Process of Manufacturing Radiation Produced Plastic Impregnated Wood in the Southern Region, USAEC Report TID-22774, March, 1966.

16. C. A. Rohrmann, Irradiated Wood-Plastic Materials Commercialization in the Pacific Northwest and Great Lakes Regions, USAEC Report BNWL-261, Pacific Northwest Laboratory, June 1, 1966.

17. J. H. Frankfort and K. M. Black, Engineering and Evaluation Study for the Manufacture of Wood-Plastic Composites, USAEC Report KLX-1876, Vitro Engineering Company, June 3, 1966.

18. P. J. Roberts, W. L. Bridges, and A. O. Burford, Industrial Evaluation of Radiation Processed Wood-Plastic Composites, USAEC Report ORO-3415-1, Lockheed Georgia Company, October 1966. (Same as Report ER-8621)

19. W. E. Loos and J. A. Kent, Fastening of Wood-Plastic Combinations, USAEC Report ORO-2945-9, West Virginia University, September 1, 1967.

20. J. A. Kent, A. Winston, W. R. Boyle, and G. B. Taylor, Preparation of Wood-Plastic Combinations Using Gamma Radiation to Induce Polymerization, USAEC Report ORO-2945-7, West Virginia University, March 17, 1967.

21. J. A. Kent, G. B. Taylor, W. R. Boyle, and A. W. Winston, Radiation Induced Polymerization of Vinyl Monomers Impregnated in Wood, USAEC Report ORO-2945-8, West Virginia University, Dec. 6, 1966. Also in Chem. Eng. Progr. Symp. Ser. 64(83): 137-43 (1968). Presented at a Symposium on Industrial Radiation Chemical Processes, Detroit, Michigan, Dec. 6, 1966, CONF 661201-3.

23. J. A. Kent, W. E. Loos, W. R. Walters, W. R. Boyle, G. W. Taylor, and A. W. Winston, Preparation of Wood-Plastic Combinations Using Gamma Radiation to Induce Polymerization. Topical Report on Impregnation of Wood with Acrylic Monomers, USAEC Report ORO-2945-4, West Virginia University, April 1, 1966.

22. W. R. Boyle, A. Winston, and W. E. Loos, Preparation of Wood-Plastic Combinations Using Gamma Radiation to Induce Polymerization, USAEC Report ORO-2945-11, West Virginia University (1970).

24. E. Ellwood, R. Gilmore, J. A. Merrill, and W. K. Poole, An Investigation of Certain Physical and Mechanical Properties of Wood Plastic Combinations, USAEC Report ORO-638, North Carolina State University and Research Triangle Institute, May 1969.

DTIE: Supplemental bibliography will be submitted later.

DTIE: This will be updated before publishing.

ORNL ISOTOPE KILOWATT PROGRAM (2)

A. P. Fraas*

Supplementary Keywords: energy source; conversion, thermoelectric.

In April 1967 a conference[1] in Washington, D. C., on energy sources included discussions on radioisotopic power sources. The energy output of sources then available was less than 0.1 kW, although higher power sources were even then under development.

In 1968 Oak Ridge National Laboratory started work on a program** to evaluate various types of radioisotopic energy conversion systems for the production of 1 to 10 kW of electric power for terrestrial and undersea applications. The first phase of the program---a parametric and engineering analysis comparing the principal isotopic fuels and the principal types of energy conversion systems plus preparation of conceptual designs for the more attractive systems---was completed[2] in the summer of 1969.

In October 1969 ORNL was asked to proceed with a detailed engineering study of the three most promising systems developed in Phase I, i.e., a 5-kW_e organic Rankine-cycle system, a 3-kW_e steam Rankine-cycle system, and a 2-kW_e thermoelectric system. A program for a 3-year effort for calendar years 1970 - 1972 was planned, following reexamination of the conceptual designs presented in the Phase I report and consideration of possible improvements. The objective is to evolve by December 1972 a set of designs for two prototype power plants with a clear delineation of the development required in each case, including the cost and time for the

*Program Director, Reactor Division, Oak Ridge National Laboratory.

**For the U.S. Atomic Energy Commission Division of Reactor Development and Technology and the Naval Facilities Engineering Command.

various program steps. Because of limited funds and the desirability of narrowing the field to a single Rankine cycle system, particular attention was given to the relative merits of the organic and steam Rankine-cycle systems.

Organic Rankine-cycle System (3)

The Rankine-cycle system under study (Fig. 1), except for the regenerator, is a conventional system with the turbine, generator, and boiler feed pump on a single shaft. The regenerator increases the system efficiency by recovering the enthalpy difference between the superheated and saturated vapors.

Review of available information on organic working fluids indicated that Dowtherm A was the only organic fluid that had been studied sufficiently at various operating temperatures in the U.S.A. to be used without extensive testing. Most of the work on Dowtherm A Rankine-cycle systems has been directed toward the space power plant, where the fluid must withstand temperatures of at least 650°F and preferably 700°F. However, naval power units encounter lower temperatures, and the design study was directed toward the use of Dowtherm A at about 600°F. At this temperature, thermal degradation should not be serious even for periods of as long as 5 years.

To decrease the overall size of the power unit, a new system configuration was evolved.[3] It appears that both the cost of fabricating the isotope capsules and the size and weight of the heat block--shield assembly can be decreased by increasing the diameter of the fuel capsules and the length with a corresponding decrease in the number of fuel capsules from 19 to 7, compared to those in the Phase I design. Low-carbon iron was selected as the shield material, and a heat block--shield assembly was

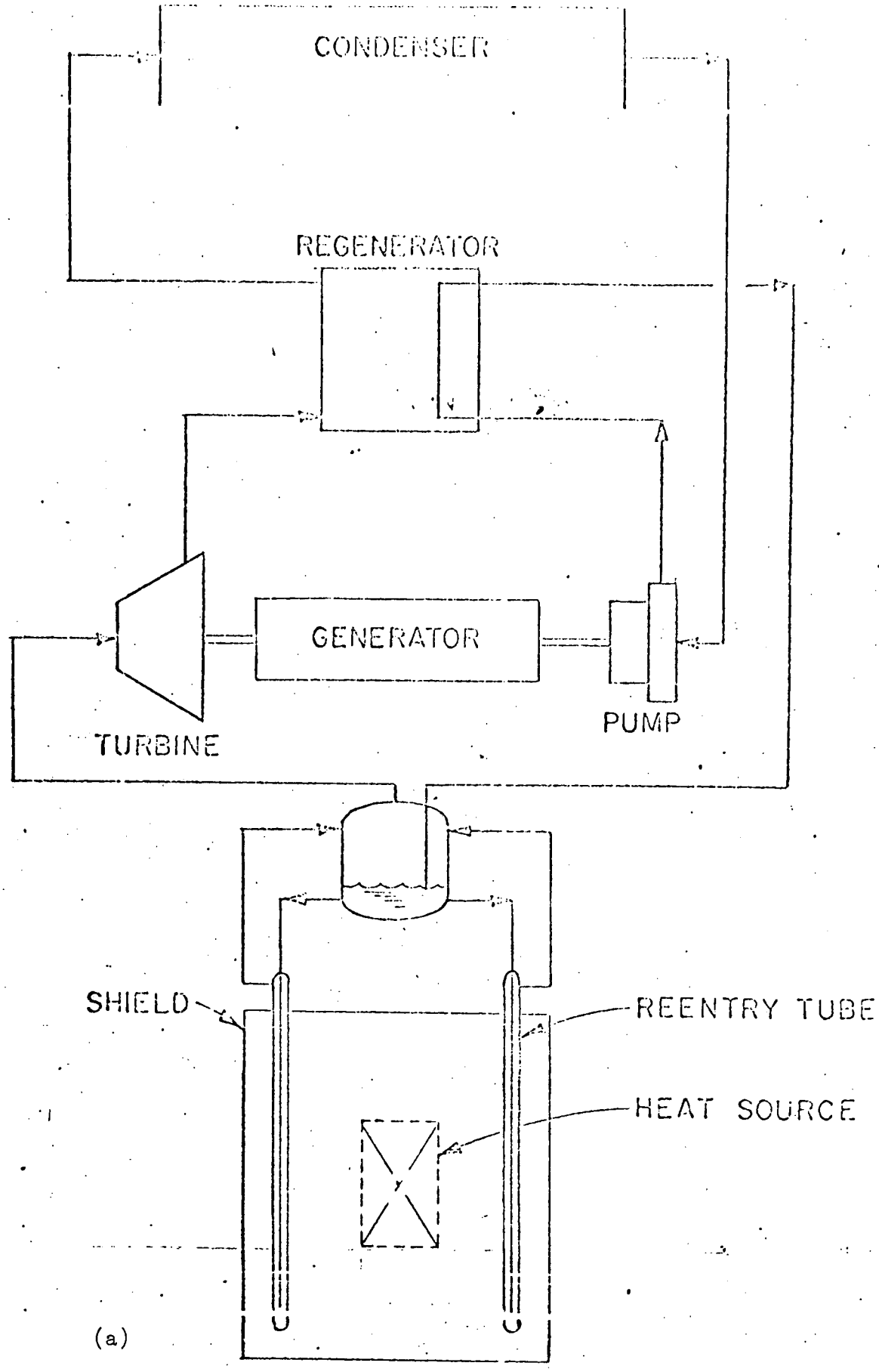

Fig. 1. Organic Rankine cycle system: (a) flow diagram and (b) preliminary design.

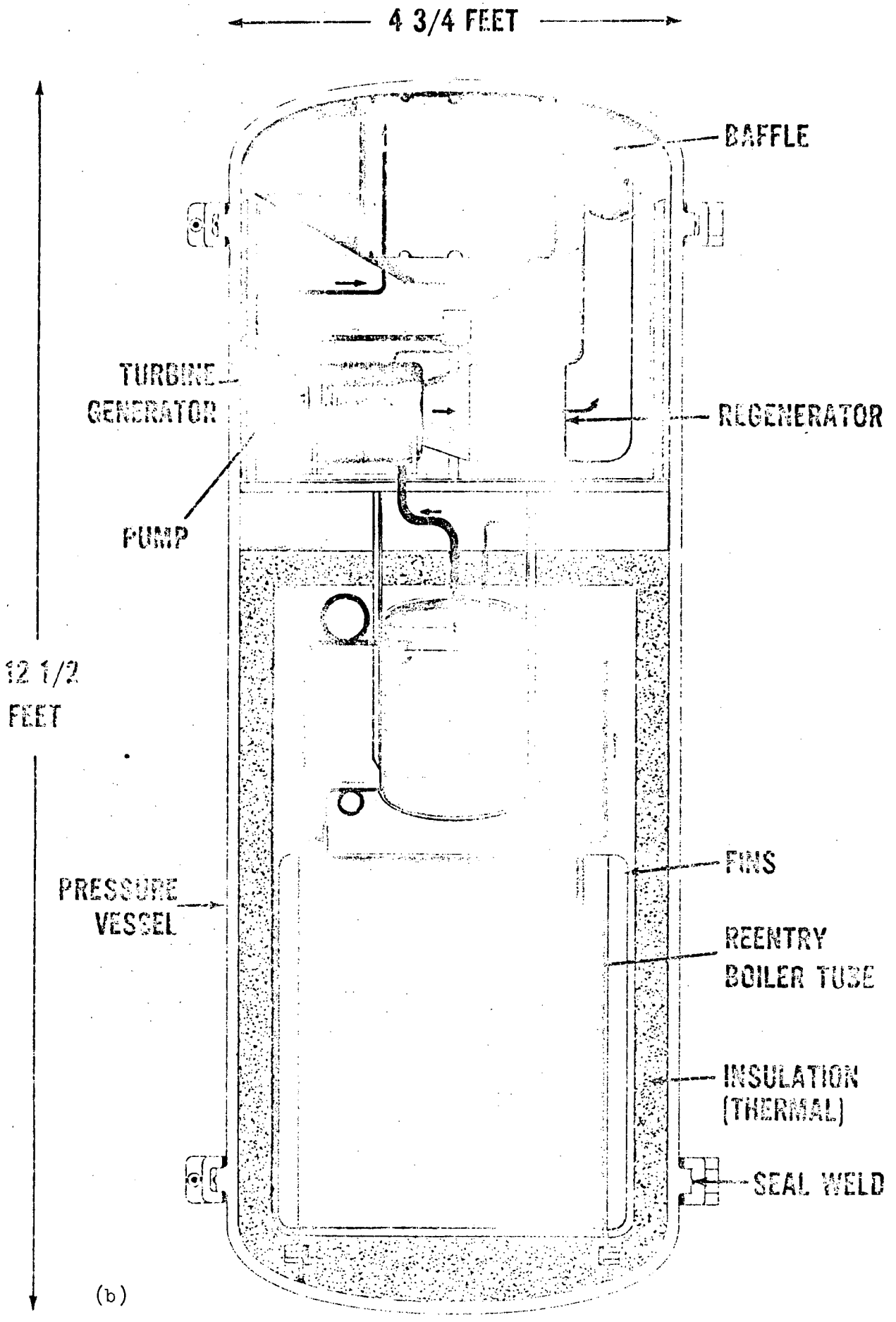
4 3/4 FEET
BAFFLE
TURBINE GENERATOR
REGENERATOR
PUMP
12 1/2 FEET
FINS
PRESSURE VESSEL
REENTRY BOILER TUBE
INSULATION (THERMAL)
SEAL WELD

(b)

evolved (Fig. 2) that will satisfy not only the requirements of the organic Rankine-cycle system, but also those of the steam Rankine-cycle and thermoelectric systems.

An initial investigation of the thermal insulation--thermal fuse problem led to the hope that a ceramic foam type of thermal insulation could be chosen to give good thermal insulation at normal operating temperatures and yet melt out if the temperature should be increased to 200°F above the design temperature. Tests of this material showed that this approach was not satisfactory, and a different concept---the use of a large number of layers of aluminum wire screen---was investigated. Preliminary results indicate that this screen should satisfy both the thermal insulation and thermal fuse requirements.

Steam Rankine-cycle System (3)

The principal problems, other than the turbine generator associated with the steam Rankine-cycle system presented in the Phase I study,[1] appear to be those of system control and the detailed performance characteristics of the reentry tube boiler. Preliminary studies indicate that there is a good possibility that an exceptionally simple but unorthodox control system can be used with a very high degree of reliability. One such system (Fig. 3) contains a thermostatically controlled valve in the line between the feed-water pump and the once-through boiler. Connections would be such that as the radioisotope decays and the heat generation rate decreases, the valve would gradually close, decreasing the feed-water flow rate.

Thermoelectric System (3)

All the thermoelectric power unit configurations presented in the Phase I study have serious shortcomings---they are either too large and

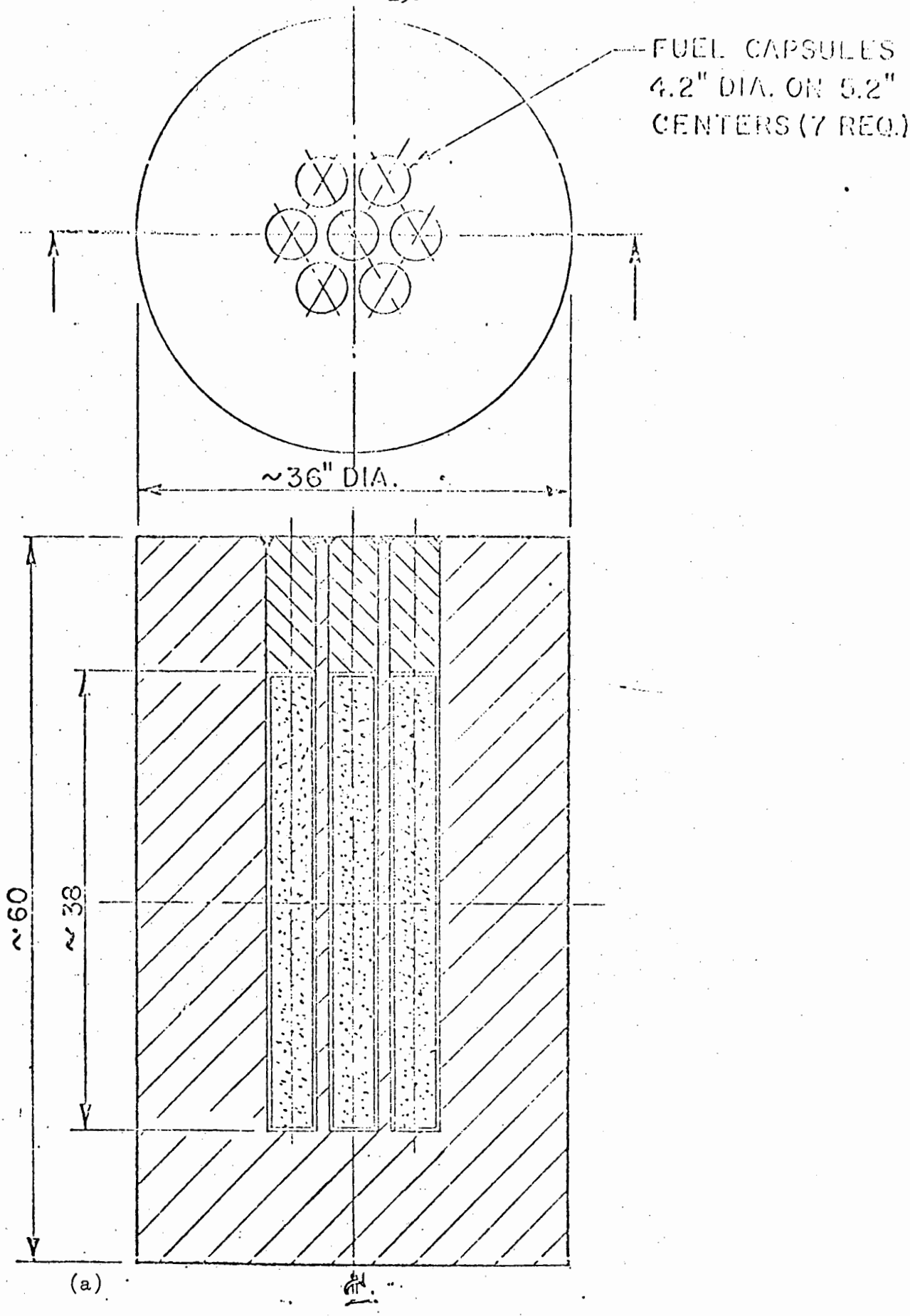

Fig. 2. Heat block-shield: (a) diagram and (b) preliminary design.

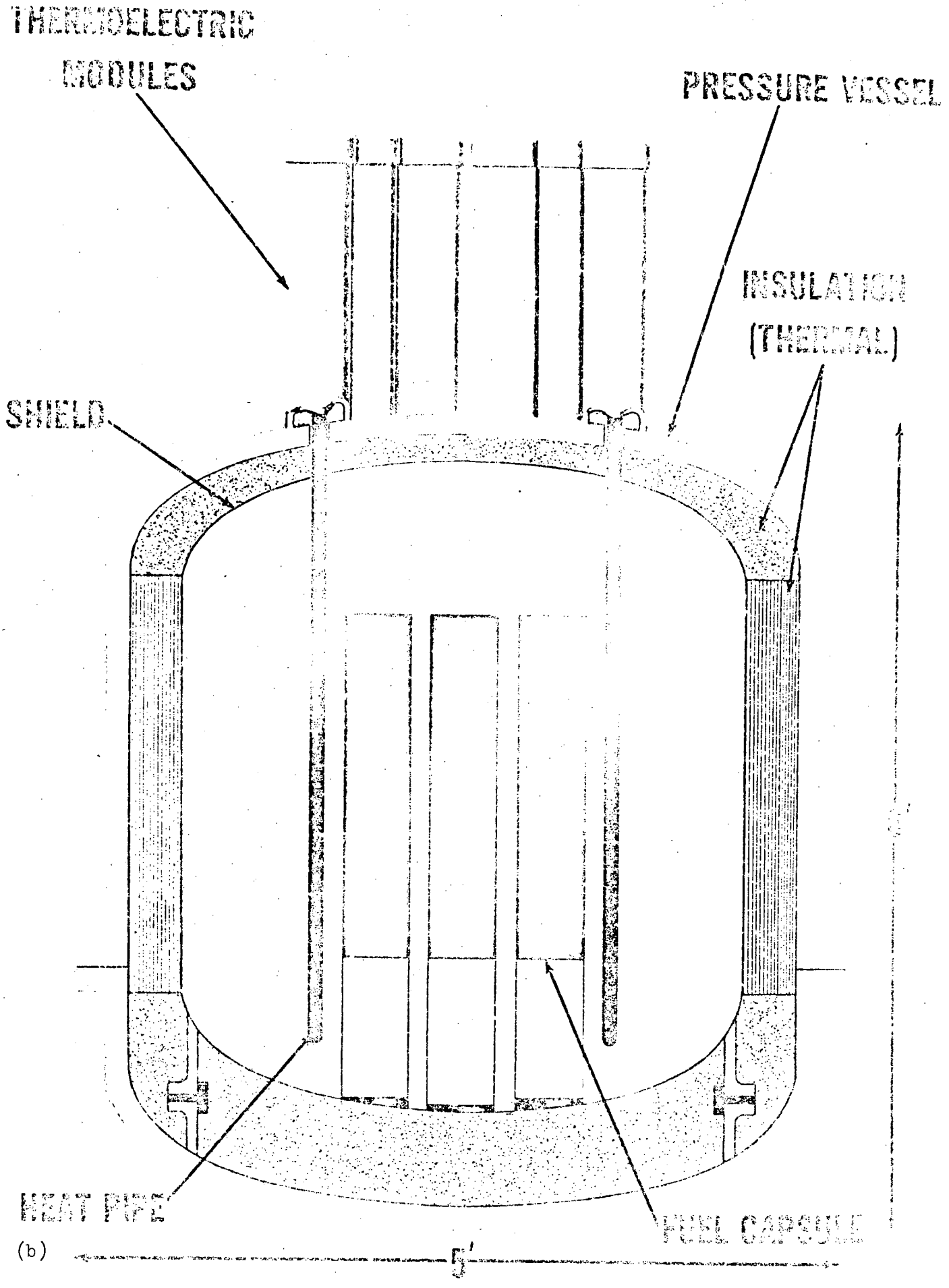
THERMOELECTRIC
MODULES
PRESSURE VESSEL
INSULATION
(THERMAL)
SHIELD
HEAT PIPE
FUEL CAPSULE
5'

(b)

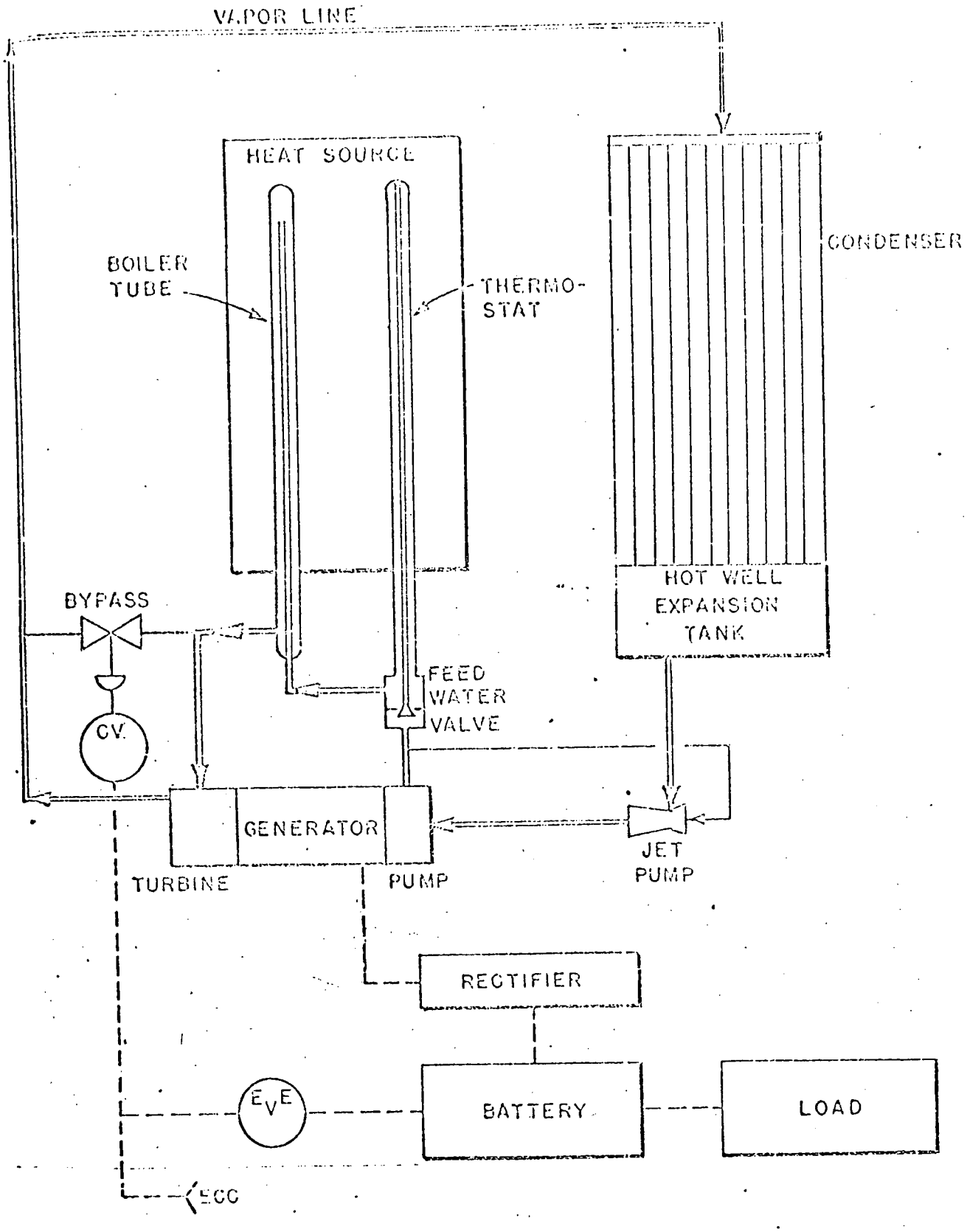

Fig. 3. Flow diagram of a small steam power plant with a radioisotopes heat source, a once-through boiler, and a very simple control.

bulky or have serious assembly problems. A Los Alamos--developed wick structure for heat pipes was used as the basis for designing a modular thermoelectric power unit that appears attractive from the standpoint of the principal criterions that have been evolved for naval isotope power units. A complete power unit consisting of a set of thermoelectric modules and heat pipes has been designed (Fig. 4) and is expected to serve as the reference design for the Phase II effort.

(M G)

References

1. R. M. Chapman, D. A. Patterson, et al. (eds.), A Report by the Panel on Energy Sources of the Committee on Undersea Warfare [Washington, D. C., April 1967], National Research Council, Publ. 1702, Natl. Acad. Sci., Washington, D. C., 1968; extracted in Isotopes and Radiation Technology 7: 449-51 (1970).
2. R. A. Robinson, Isotopes Kilowatt Program, Task 1, Conceptual Design and Evaluation, ORNL-TM-2366, Oak Ridge National Laboratory (January 1970).
3. A. P. Fraas, Isotope Kilowatt Program Quarterly Progress Report for Period Ending March 31, 1970, ORNL-TM-3011, Oak Ridge National Laboratory (July 1970).

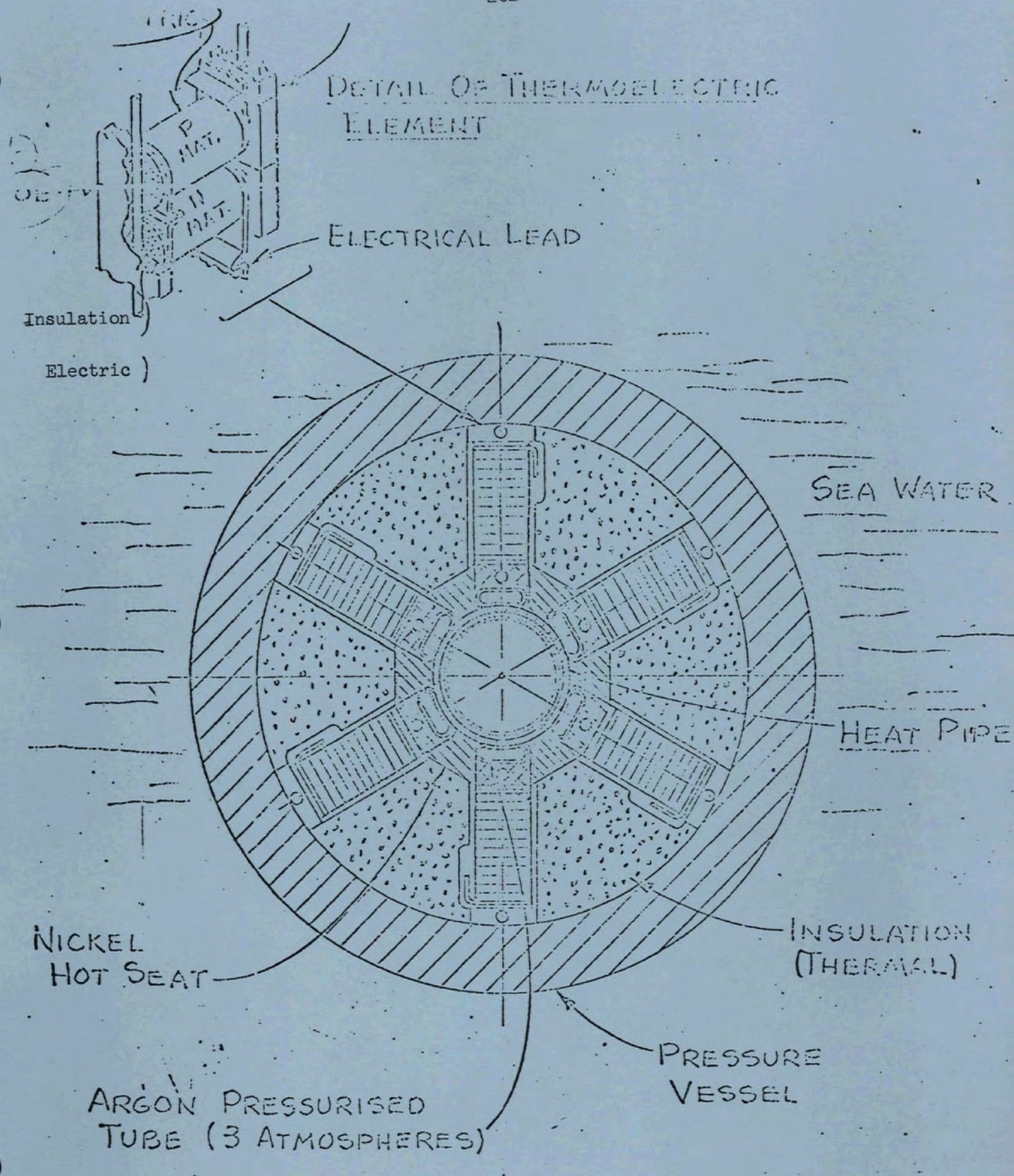

Fig. 4. Horizontal cross-section through a thermoelectric module.

DUAL-RADIOISOTOPIC METHOD FOR DIAGNOSIS OF PULMONARY EMBOLISM*

Supplementary Keywords: lung; medicine; ventilation; scanning; differentiation; flow measurement; xenon-133; iodine-131; indium-113m

A simple and sensitive method to aid in the diagnosis of pulmonary embolism by distinguishing it from other causes of perfusion abnormality consists in determining both pulmonary arterial blood flow with ^{131}I or ^{113m}In and ventilation rate with ^{133}Xe. That the dual procedure is more accurate than determination of blood flow alone was indicated by results of tests on 20 subjects. Ten of these subjects had documented pulmonary embolism in which the embolic lung was under-perfused and well ventilated, while in 5 patients with other pulmonary diseases, abnormalities of ventilation equaled or exceeded those of perfusion. Five were controls. The method is simple to perform and gives a low radiation exposure to the patient so that it may be repeated to follow the course of disease or the efficacy of treatment. The total time for perfusion scanning is 45 min and ventilation scanning 30 min or less.

The pulmonary arterial blood flow is determined from a perfusion scan. For this purpose, 300 μCi of ^{131}I-labeled human serum albumin macroaggregates or 3 mCi of ^{113m}In-labeled iron hydroxide particles of 25 to 50 μ dia is injected intravenously. These particles are temporarily trapped in the alveolar capillaries and precapillary arterioles, and perfusion images are made, requiring 3 to 8 min (10^5 to 3×10^5 counts). The regional ventilation is estimated with ^{133}Xe. The patient breathes out to residual volume and then breathes in to total lung capacity from a spirometer containing 50 mCi (5 mCi/liter) of ^{133}Xe gas in air. Since most patients inspire 2 to 5 liters of the radioactive mixture, 10 to 25 mCi of ^{133}Xe is transferred temporarily to the lungs. The patient holds his breath for 5 to 15 sec, and images are obtained with 10^5 counts.

---

*Abstract of paper by G. L. DeNardo, D. A. Goodwin, R. Ravasini, and P. A. Dietrich, The Ventilatory Lung Scan in the Diagnosis of Pulmonary Embolism, New England J. Medicine (in press).

The patients, either sitting up or lying down, were scanned with an Anger scintillation camera, using a diverging multichanneled collimator. A posterior and both lateral views of the chest were obtained and, in some instances, an anterior view.

In all ten patients with embolism the perfusion pattern was less normal and uniform than the ventilation pattern (Fig. 1). In the five patients with other pulmonary diseases---primarily chronic obstructive pulmonary disease---the abnormality in the ventilation pattern was equal to or greater than that of the perfusion pattern. The ventilation lung scan thus indicates whether the regional perfusion defects are associated with abnormal ventilation, while in embolism without infarction the embolic lung area appears under-perfused but well aerated. This is reflected on lung scans by relatively normal ventilation associated with significant perfusion abnormalities. In other pulmonary diseases the ischemic regions are also poorly ventilated. Although other conditions that might produce the pattern of normal ventilation with abnormal perfusion have not been precisely defined, theoretical considerations and limited empirical observations suggest that this pattern may be specific for pulmonary embolism.

(MG)

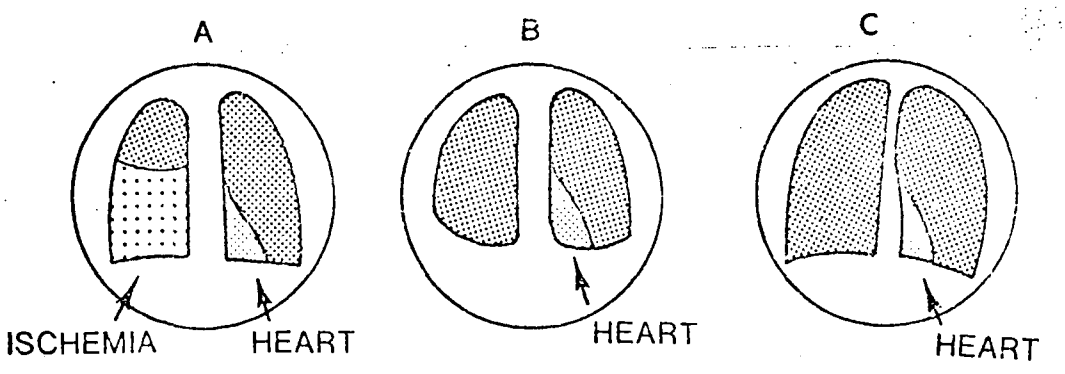

Fig. 1. Sketches of anterior views of three patients showing (a,b) perfusion and (c) ventilation scans.

RADIOISOTOPES AND RICE (2)

Supplementary Keywords: textbook; material tracing; comparison; tracer; mutation; grain; agriculture; x-ray machine; accelerator; conference; worldwide; cobalt-60; nitrogen-15; phosphorus-32.

With rice the staple diet of about half of mankind, the importance of any measures taken to increase crop yields and decrease production costs cannot be overestimated. Two recent publications of the IAEA (Vienna, Austria) describe projects in this field:

> Rice Fertilization, A 6-year isotope study on nitrogen and phosphorus fertilizer utilization, Tech. rpt. No. 108 (177 pp. $5.00).
>
> Rice Breeding with Induced Mutations. II, report of meeting in Oiso, Japan, 12-14 August 1968, Tech. rpt. No. 102 (124pp., $4.00).

Both projects were carried out under the sponsorship of the Joint FAO/IAEA Division of Atomic Energy in Food and Agriculture and of the Agriculture section of the IAEA Laboratory at Seibersdorf, the participants being mainly scientists from the major rice-producing countries of the world. There were about 20 and 35 participants in the fertilizer and mutations conferences, respectively.

A unique feature of the fertilization project was the annual meeting of the participants to compare and discuss the results obtained from the most recent field, greenhouse, and laboratory experiments and to plan the program for the next growing season. The study consisted in field application of fertilizers labeled with ^{32}P and ^{15}N in various chemical forms, in different locations with respect to the plant-rooting zone, and at various times during the growing season and then determining the amounts of these isotopes in the crops. This gave a direct measurement of the fertilizer uptake under field conditions. Crop yields were also determined.

The results of the fertilization study will allow more efficient utilization of fertilizer and an improvement in agricultural practices. For example, phosphate was more efficiently used when placed on the

surface than when put either shallowly or deep into the ground. Superphosphate applied in nurseries had no effect on phosphorus utilization after transplanting, and late application and splitting of application slightly decreased phosphorus utilization. Nitrogen from ammonium sulfate, urea, or monoammonium phosphate--ammonium sulfate was utilized better when placed 5 to 15 cm below the surface at transplanting time than when placed on the surface, while sodium nitrate, ammonium nitrate, and nitric phosphate were inefficient sources of nitrogen. Late application was better than early, and the soil pH did not affect the nitrogen utilization.

The 1968 meeting on rice breeding was the fourth* meeting of participants on a program initiated in 1964 to increase quality and quantity of rice crops. Mutations induced by both radiation---^{60}Co gamma rays, fast- and thermal-neutron beams, and x rays---and chemicals were discussed. Detailed tables of data on mutant characteristics are presented in the proceedings.

(MG)

---

*See I&RT 6: 319(1969) for review of reports on earlier work.

FROSTBITE EVALUATION WITH ^{131}I-RISA (2)

A radioisotopic technique for evaluating frostbite has been reported* from Albany (N. Y.) Medical College. The procedure, as tested on New Zealand white rabbits, consists in injecting 10 μCi of ^{131}I-labeled human RISA (radioiodinated serum albumen) into an ear vein and counting, at 5-min intervals, the activity in the animal's front paw, which had been frozen. The uninjured front paw as well as paws of entirely normal animals, were used as controls. The method was tested both immediately after exposure of the paw to cold and 24 hr later, since human frostbite cases are usually seen by a doctor after the damaged tissue has thawed.

Preliminary data showed a statistically significant difference in the radioactivity counting pattern in the damaged and undamaged paws (Fig. 1). Indications are that this method of detecting tissue damage---and thus of predicting tissue loss---could be useful in evaluating methods of treating frostbite.

---

*D. B. Kettelkamp, C. J. Bertuch, and P. Ramsey, Radioisotope (^{131}I RISA) Evaluation of Damage in Frostbite. An Experimental Study, J. Bone and Joint Surgery 51-A(4): 717-27 (1969).

Supplementary Keywords: medicine; diagnosis; skin; tracer.

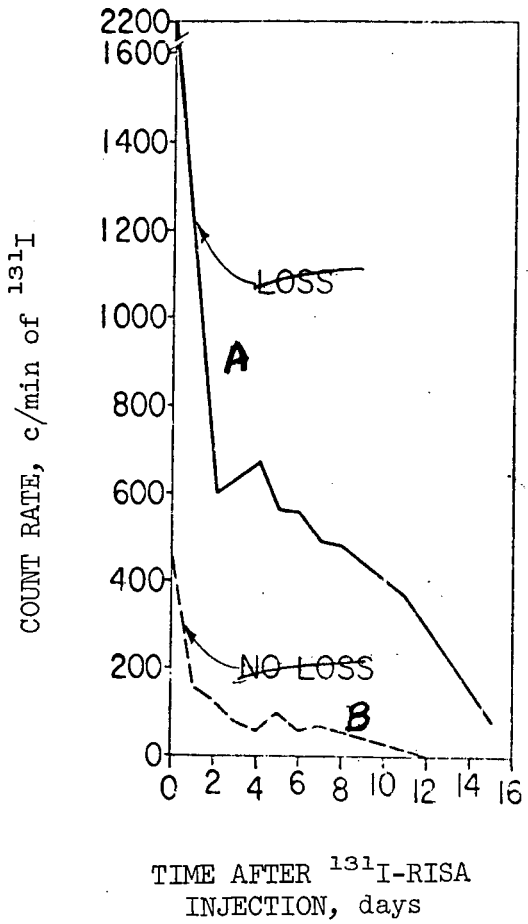

Fig. 1. Radioactivity count rate, per microcurie of ^{131}I injected, in paws of New Zealand white rabbits (A) damaged by freezing with resulting tissue loss and (B) undamaged.

Molecular Radiation Biology by Hermann Dertinger and Horst Jung, Heidelberg Science Library Vol. 12, translated from the German by R. P. O. Hüber and P. A. Gresham, Springer-Verlag, New York, 1970 (237 pp., 365 references).

Supplementary Keywords: textbook; review, technical; theory, applied; microbiology; industry; industry, food; industry, pharmaceutical; tracer; hydrogen-3; carbon-14; phosphorus-32; sulfur-35.

Many uses of ionizing radiation depend ultimately on the effect of radiation on materials at the molecular level. Dertinger and Jung review not only the theoretical bases of radiation effects but also some specific effects, e.g., the actions of radiation on enzymes and bacteria, which are of interest to the food and pharmaceutical processors, and the action of radiation on viruses, which is of interest to antitoxin manufacturers. Several types of applied radiation are considered---gamma, x, electron, proton, C^{6+} (and ultraviolet). Likewise some discussion is included of the action of energy from radioisotope tracers---e.g., ^{3}H, ^{14}C, ^{32}P, and ^{35}S---along with the effects of O_2 and heat. As a basic review of the subject this book should be useful to radioisotope users in general.

(MG)

Radiation Sensitivity of Toxins and Animal Poisons, Proc. Panel Bangkok, 19-22 May 1969 (STI/PUB/243), IAEA Vienna 1970 (118 pp., $4.00)

Supplementary Keywords: industry; industry, pharmaceutical; preparation, labeled material; industry, food; conference.

Many snake venoms, because of their protein nature, are relatively sensitive to radiation and can often be detoxified by an irradiation technique. Of interest to persons in many fields is the general review (111 references) presented here of the effect of radiation on biological properties, since other toxins of bacterial and plant origin are similarly affected. Specific subjects discussed by the Panel included radiation sensitivities of individual systems such as Clostridium botulinum toxins and cobratoxin. Not only theoretical aspects of detoxication but also possible practical applications were considered, e.g., detoxication of cobra venom.

The results of investigations presented at the meeting indicate the feasibility of using ionizing radiation for detoxication of toxins and venoms of bacterial, fungal, and animal origin, and its possible usefulness in the preparation of antivenoms.

The elimination of bacterial toxins from foodstuffs by irradiation does not seem to be promising since the toxins in food are highly protected by other components present.

One paper discussed labeling of snake venom with various radioisotopes. In principle, all methods available for labeling proteins in vitro and in vivo could be applicable for labeling toxins and venoms. More attention should be paid to working out suitable methods for labeling toxins and venoms, and to their use in biochemical, physiological, pharmacological and immunological studies of toxin action as well as of antigen-antibody interaction.

(MG)

DTIE: cap P

Medical Radionuclides: Radiation Dose and Effects (AEC Symposium Series 20). Proc. Symp. Oak Ridge Assoc. Univ. Dec. 8-11, 1969, editors: R. J. Cloutier, C. Lowell Edwards, W. S. Snyder, and E. B. Anderson. $3.00. (CONF-691212) (CFSTI) 528 pp, June 1970.

Ever since the introduction of radionuclides for diagnostic purposes, the trend has been to decrease radiation dosage to patient (and hazard to medical staff personnel) with increase in specificity and sensitivity of the test procedure.

At a Dec. 1969 conference the history of dosimetry procedures was presented, and principles involved in modern dosimetry practices were discussed. Consideration was given to patient doses resulting from certain specific diagnostic procedures, e.g., cisternography using ^{131}I-labeled human serum albumin, ^{133}Xe techniques, and ^{3}H-labeled thymidine procedures. The effects of radioisotopic techniques on various organs and tissues---blood, kidneys, gastrointestinal tract, and bone and marrow---were presented, and design of new radiopharmaceuticals and the future of radioisotopic diagnostic procedures were discussed. Radiotherapy isotopic considerations were limited to effects of radioactive iodine therapy and polycythemia vera treatment with radioisotopes.

Approximately 150 persons, mostly from the U.S.A., participated.

The printed proceedings of the conference became available within 6 months, and the editing, makeup, and printing are excellent.

(MG)

Supplementary Keywords: conference; medicine; diagnosis; dosimetry; tracer.

Neutrons From ^{2}H and ^{3}H May Fight Cancer*

Supplementary Keywords: source, neutron; accelerator; medicine; therapy.

The fusion of ^{2}H and ^{3}H may be the source of neutron beams for cancer therapy. A low-cost compact machine to deliver a 14-megavolt neutron beam is being developed at the University of Wisconsin. The beam will attack anoxic cells that are resistant to x- and gamma rays. The NIH-funded project is directed by Dr. Max L. M. Boone, head of the Radiotherapy Department of the University's hospitals, and Dr. Charles A. Kelsey, Associate Professor of Radiology. Dr. Boone has achieved good results with neutron therapy at Hammersmith in London, but the cyclotron neutron source he used was expensive and unwieldy.

(HPR)

---

*From Chemical and Engineering News, June 8, 1970, p. 61.

SHIPPING CASK EVALUATION* (2)

R. D. Seagren**

Abstract. Radioisotope shipping cask regulations are reviewed, and sources of information needed by the shipper are reviewed.

Supplementary Keywords: industry, transportation; bibliography; industry, nuclear energy; safety, container; phosphorus-33, krypton-85; strontium-90; molybdenum-99; curium-244.

(Introduction)

In January 1969 the United States Department of Transportation's (DOT) new packaging requirements for radioactive material went into effect. These regulations[1] are in substantial conformity with those of the International Atomic Energy Agency (IAEA).[2] Radioactive material is now classified into seven groups, depending on the radiotoxicity of the isotope concerned. Smaller amounts of more toxic material and larger amounts of less toxic material may be shipped in the same type of package. Shipping packages are now divided into two types: Type A and Type B. Type A packages are limited to small amounts of radioactive material, which if released in the event of a package being destroyed would not have catastrophic consequences. Type B packages are for shipments of somewhat larger amounts of radioactive material and are designed to contain the radioactive material when subjected to a series of consecutive hypothetical shipping accidents.

Figure 1 shows a typical Type A package, which is considered adequate containment for, e.g., 1 mCi of most alpha emitters--- 50 mCi of ^{90}Sr, 3 Ci of ^{33}P, or 20 Ci of ^{99}Mo, provided radiation requirements are met. This package is designed to meet what is termed "normal" conditions of transport. These include exposure to the equivalent of a 30-min cloud-burst, followed by the equivalent of a fall off the tailgate of a truck, a 1-ft drop onto each corner of the package, impact of a 13-lb steel rod from the height of 40 in., and a compression load 5 times the weight of the package for a period of 24 hr.

Figure 2 shows typical examples of Type B packages, suitable for, e.g., 20 Ci of most alpha emitters, 20 Ci of ^{90}Sr, 200 Ci of ^{33}P, 200 Ci of ^{99}Mo, or 50,000 Ci of ^{85}Kr. These packages are designed to meet normal conditions of transport and also to withstand a series of consecutive hypothetical accidents. The series of accidents are a 30-ft drop onto an unyielding surface, a 40-in. drop

*Presented at Radioisotope Production Technology Development Meeting at Oak Ridge, Tenn., June 2-3, 1970, sponsored by the USAEC's Division of Isotopes Development and the Atomic Industrial Forum. A second article in this area will be presented in a future issue of Isotopes and Radiation Technology.

**Isotopes Division, Oak Ridge National Laboratory.

ORNL-
DWG-16704

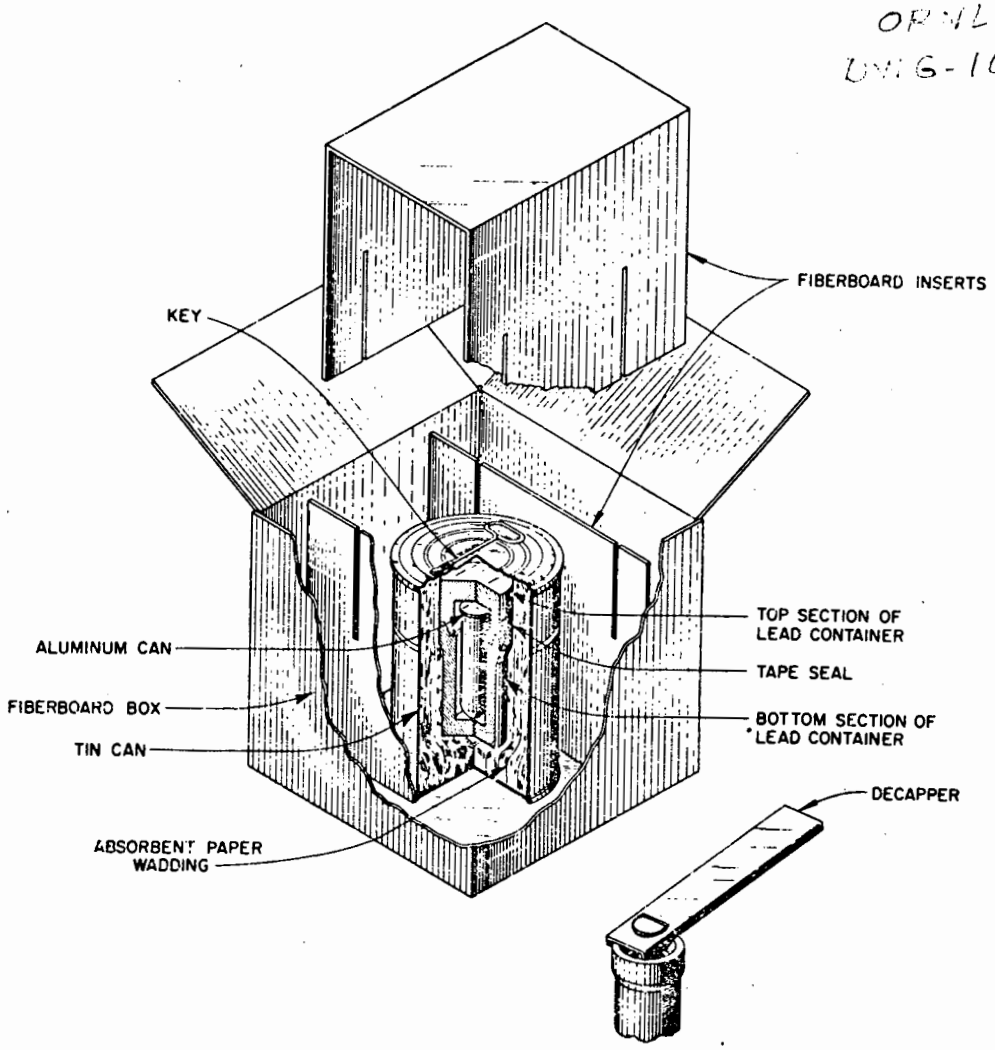

Fig. 1. Disposable Container for Solid Materials.
(Lead shielding — 1/4 and 1/2 in.)

onto a 6-in.-dia steel pin, exposure to a 30-min oil fire, and immersion in 50 ft of water.

Quantities of radioactive material larger than those specified for Type B packages must be shipped in packages especially approved by the AEC and the Department of Transportation. Packages formerly shipped under the authority of a Bureau of Explosives permit can no longer be used.

ORNL-DWG 94464

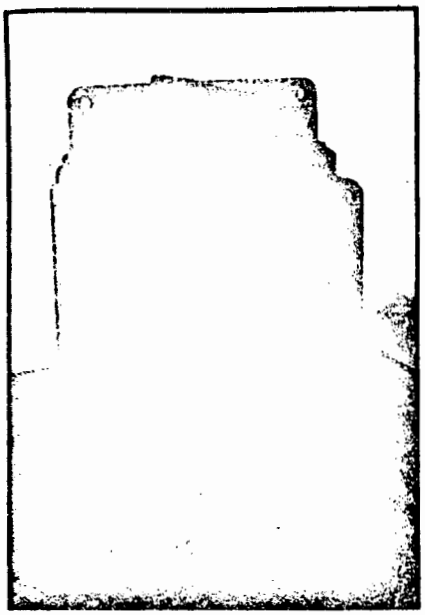

Uranium-Shielded Cask

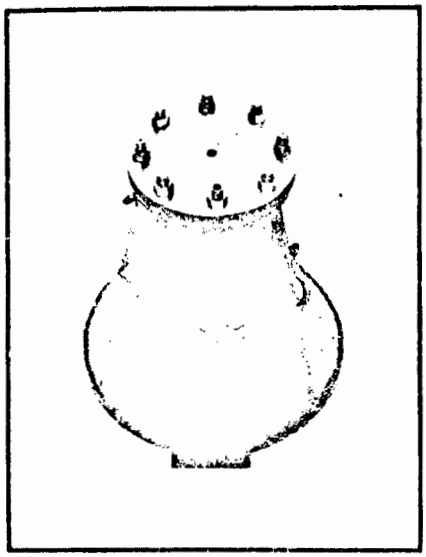

Tungsten-Shielded Cask

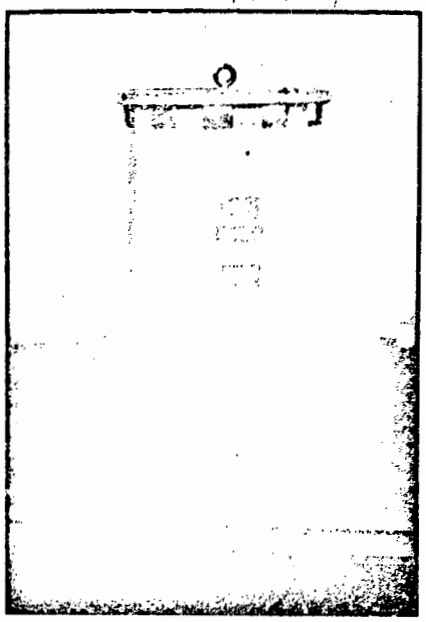

Double-Lead-Shielded Cask

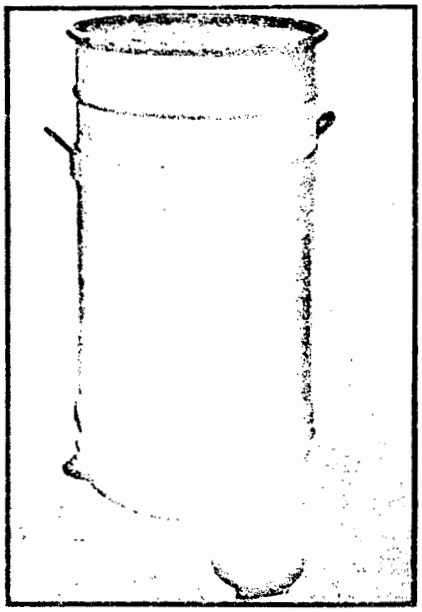

SHIPPING CONTAINERS

ORNL ISOTOPES DEVELOPMENT CENTER

New shipping containers have been developed to meet the new safety standards of the U.S. Department of Transportation for the packaging of large quantities of radioactive materials. This is part of a continuing program to insure reliability of shipping containers and to establish design standards for improved packaging of radioactive materials.

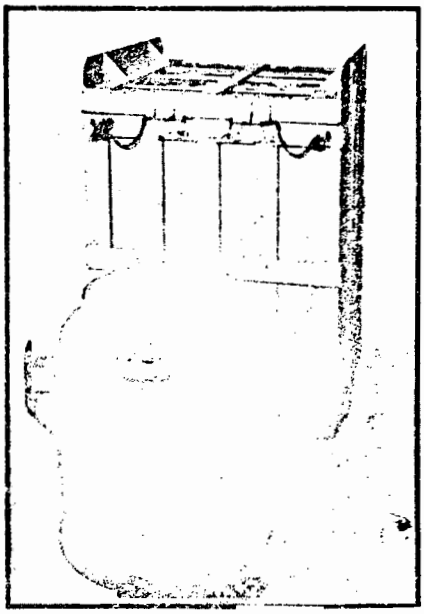

Radioactive gas cylinder with formed-plastic fire and impact shield

Lead-shielded cask with fire and impact shield

Fig. 2. Typical Type B Packages.

Regulatory Requirements (3)

Radiation regulations evolved during this century as knowledgeable persons became aware of the hazards

of radiation. Initially, they dealt with X rays and radium, but with the advent of the nuclear energy program, just prior to World War II, a whole new regulatory effort dealing with radiation safety came on the scene. Operating experience during the Manhattan Project made it apparent that regulatory direction of radiation safety was in the public interest, not only for the health and welfare of mankind, but also for allaying fears and overcoming reluctance to accept this little-understood form of energy.

DTIE: Do not change to "before

The AEC and the Public Health Service were initially instrumental in establishing standards for radiation safety. In recent years possibly every executive branch of the Federal government and presidential commission, as well as officials of 50 states and many cities and counties, have had something to add to radiation safety regulations.

Trade organizations have developed tariffs, or agreements, which, though not regulatory, deal with radiation and radioactive material.

It is apparent that regulatory personnel at all levels of government are sensitive to the many warnings regarding the real and sometimes imagined hazards of radiation, and it is often easy to conclude that some regulations are born of fear, by well meaning but not necessarily knowledgeable people. This fear of the unknown has been instrumental in the development of the most highly regulated industry in our history.

The basic regulation on packaging, 49 CFR, includesthe Hazardous Materials Regulations of the DOT.

A second set of rules is found in Title 10, which is the regulations set forth by the AEC, Part 71 of which is entitled "Packaging of Radioactive Material for Transport." Another set, Title 46, is the Coast Guard Regulations, Part 146 of which is entitled "Transportation or Storage of Explosives or Other Dangerous Articles or Substances and Combustible Liquids on Board Vessels."

For Type A packaging regulatory requirements are minimal. Essentially, the shipper certifies that his package is strong and tight and meets the requirements of normal conditions of transport.

Type B packaging is a different case. The user must furnish to the DOT proof that the package will withstand the series of four consecutive hypothetical accidents (drop, puncture, fire, and immersion). This proof may be either engineering evaluations, comparative data, or actual test results. If the Hazardous Materials Regulations Board of the DOT decides that the package complies with regulations and is indeed safe, it will issue a special permit, stating conditions of use and modes of transport to be used. In some cases, the DOT will ask the Division of Materials Licensing at AEC Headquarters to review the evaluation.

Packages to contain quantities of radioactive material larger than Type B quantities are handled in a still different manner. AEC regulations require that a licensee submit an evaluation of such a package to the Division of Material Licensing for approval. This evaluation must demonstrate compliance with all applicable requirements of 10 CFR 71. It is generally a formal engineering analysis. Let me point out that an analysis should cover the letter as well as the spirit of the regulation. A straight forward, honestly presented, fully documented evaluation of a package that is sincerely believed to be adequate will do much to eliminate the game of "20 Questions" that some regulatory groups are sometimes thought to play. After the AEC has issued a license amendment or other form of approval, a petition for a special permit must be submitted to the Office of Hazardous Materials of the DOT in the format of 49 CFR 170. This section of the regulations requires justification for a special permit, why the public interest would be served, and the basis upon which the petition would provide an adequate and reasonable degree of safety. The Office makes a technical review of the petition and then forwards it to the administrators of the modes of transport involved. The Highway, Railroad, or Aviation Administrations as well as the Coast Guard reviews the petition and either approves or disapproves it. If approved, a special permit is issued.

Developments (3)

The Division of Isotopes Development supports a continuing program of package design, development, and evaluation as part of the Source Safety Testing Program. The objective of this program is to evaluate radioactive material packaging to determine whether they meet performance standards developed by the AEC, DOT, and the IAEA. Since the Isotopes Division of Oak Ridge National Laboratory is responsible for all the Laboratory's shipments of radioactive material, it handles and evaluates all types of packaging and has been instrumental in the development of several new concepts of package design. Figure 3 shows a laminated fir plywood and maple fire and impact shield for transporting lead-shielded casks. Figure 4 shows a tungsten-shielded cask for material requiring up to 4 in. of lead shielding. The shield is an isostatically pressed and sintered tungsten alloy. A third design is a double lead-shielded cask. The purpose of this

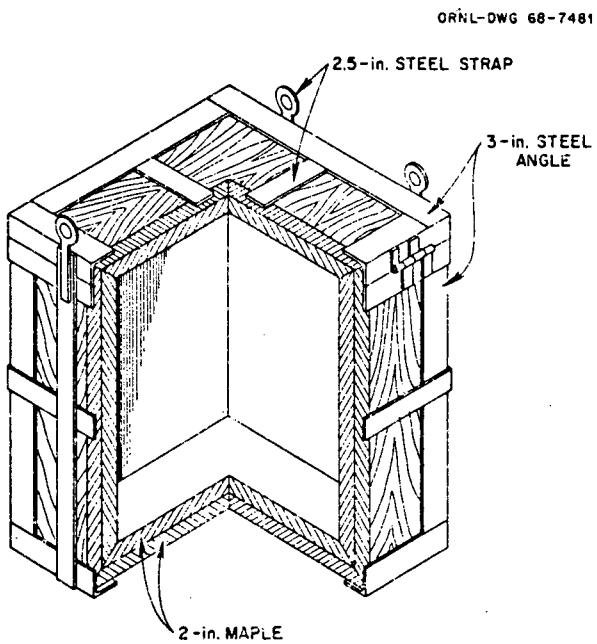

Fig. 3. Laminated Fir Plywood and Maple Fire and Impact Shield.

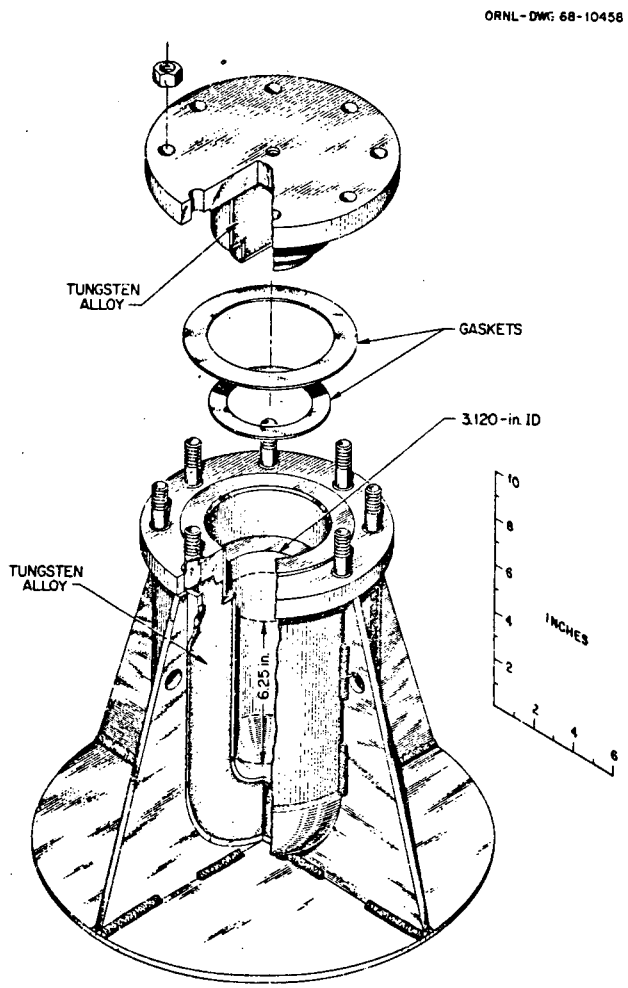

Fig. 4. Tungsten-Shielded Cask (380 lb).

design is to improve fire and impact resistance. A fourth design utilizes a laminated uranium construction as the radiation shield and also offers improved fire and impact resistance. Figure 5 shows a new design concept being developed for shielding fast neutrons emitted from some of the transuranium elements. The shielding consists of the lithium hydroxide monohydrate form, which offers approximately the same shielding effectiveness as water. Fire resistance is accomplished by transpiration cooling, the material being about half water.

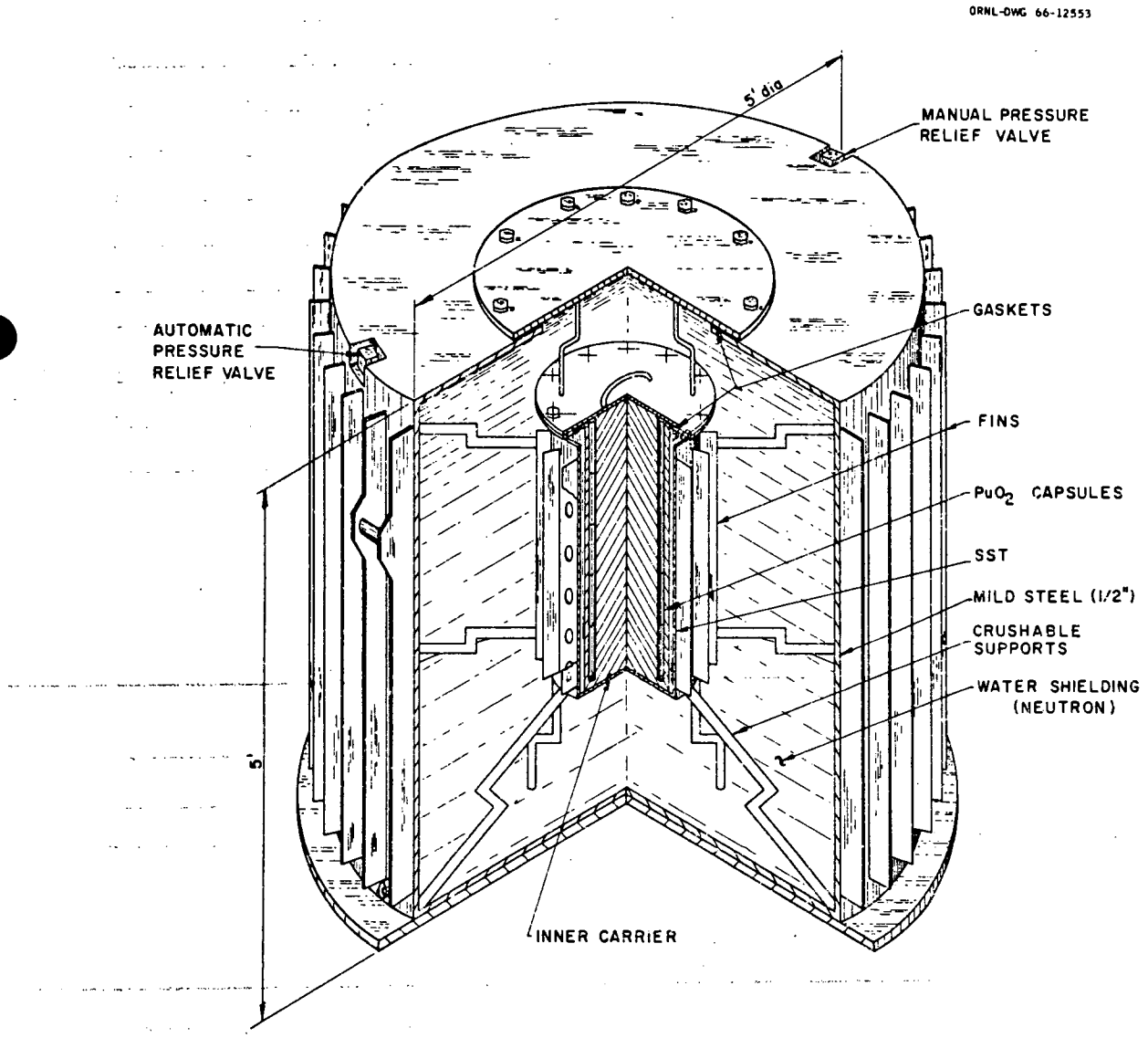

Fig. 5. Shipping Carrier for Bulk Shipment of PuO_2 Microspheres and Fueled PuO_2 Capsules.

DTIE: Do not change to "Before."

Design (3)

Prior to designing a new package or evaluating an old one, a user should first examine the DOT regulations to determine if there are packages that have already been approved for use in transporting the material under consideration. Such packages are referred to as "specification containers." The DOT regulations may be purchased from the Superintendent of Documents, Washington, D. C. as Title 49 of the Code of Federal Regulations.

If there are no specification containers that fit his need, the user should then examine the AEC Directory of Shipping Containers, assembled by the Division of Construction, AEC Headquarters. This directory may be purchased from the Superintendent of Documents, USGPO, Washington, D. C. 20402 Many of the packages listed in this directory have been approved for use under the authority of a special permit and require only the owner's permission and registration by the potential user with the Office of Hazardous Materials for their use.

If a package must be designed, the user may be interested in examining the Cask Designers'Guide, issued by the Nuclear Safety Information Center[3] at Oak Ridge National Laboratory. This guide, developed under the sponsorship of the Division of Reactor Development and Technology, contains information a designer needs to ensure that his package meets the performance standards required by the appropriate Federal regulations. It may be purchased from the Clearinghouse for Federal Scientific and Technical Information, Springfield, Va. (see front cover of Isotopes and Radiation Technology).

Another source of design information is the Nuclear Safety Information Center's storage of document abstracts on magnetic tape at the Central Computer Facility in Oak Ridge. This Center operates a routine program of selective dissemination of information to individuals according to their particular interest. It has issued an Indexed Bibliography on Transportation and Handling of Radioactive Materials,[4] which contains many abstracts of documents concerning package design and evaluation. This information is available at no cost from the Nuclear Safety Information Center.

A new package design or an existing package evaluation must first meet the requirements of normal conditions of transport. Lifting devices,

tie-downs, and package closures must be adequate to withstand the rough handling that packages receive in rail, truck, and air freight depots as well as in transit. The mere existence of a radioactive label on a package does not necessarily guarantee that it will be handled like a crate of eggs. Snatch-lifting, accidental falls from loading docks or tailgates, and load shifting are examples of transport conditions that must be considered. The primary aims of package design are to shield and to contain radioactive material when the packages are exposed to the wide range of environmental conditions as specified in the regulations.

Several avenues may be used to meet the requirements of the consecutive hypothetical accidents. As shown in Fig. 2, packages may be placed in fire-resistant outer containers that have impact resistance, e.g., steel-reinforced wooden cases or steel drums filled with vermiculite, fiberboard, or foamed plastic. The design of impact and fire shields is well understood, since they have been tested and accepted internationally. Another concept of package design is the assumption that outer shells will rupture or be punctured as a result of the impact accidents. In this case, loss of shielding may occur in the subsequent 30-min fire. Figure 6 shows a lead-shielded package based on a three-shell wall concept. The design provides inner and outer shells, plus a third shell that is positioned approximately 2 in. inside the outer one; this arrangement provides for two separate chambers to contain the lead shielding. Under accident conditions, breaching of the outer shell and subsequent loss of the outer layer of lead would not necessarily cause the cask to fail the required tests. The shielding effectiveness would not be substantially reduced, and the loss of lead would create an air gap that would decrease the effective heat input to the inner cavity of the package.

As shown in Fig. 7, a similar concept, in which puncture of the outer shell may be allowed in an accident, is utilized in several French packages. A layer of wet plaster, with 26% free water, is poured between a lead shield and the outer shell. If these packages are involved in fires, the outer shells perforate by virtue of fusible plugs and the plaster dries, forming an insulating layer around the lead shield. Results of tests indicate that the layer offers adequate protection from impact followed by a fire.

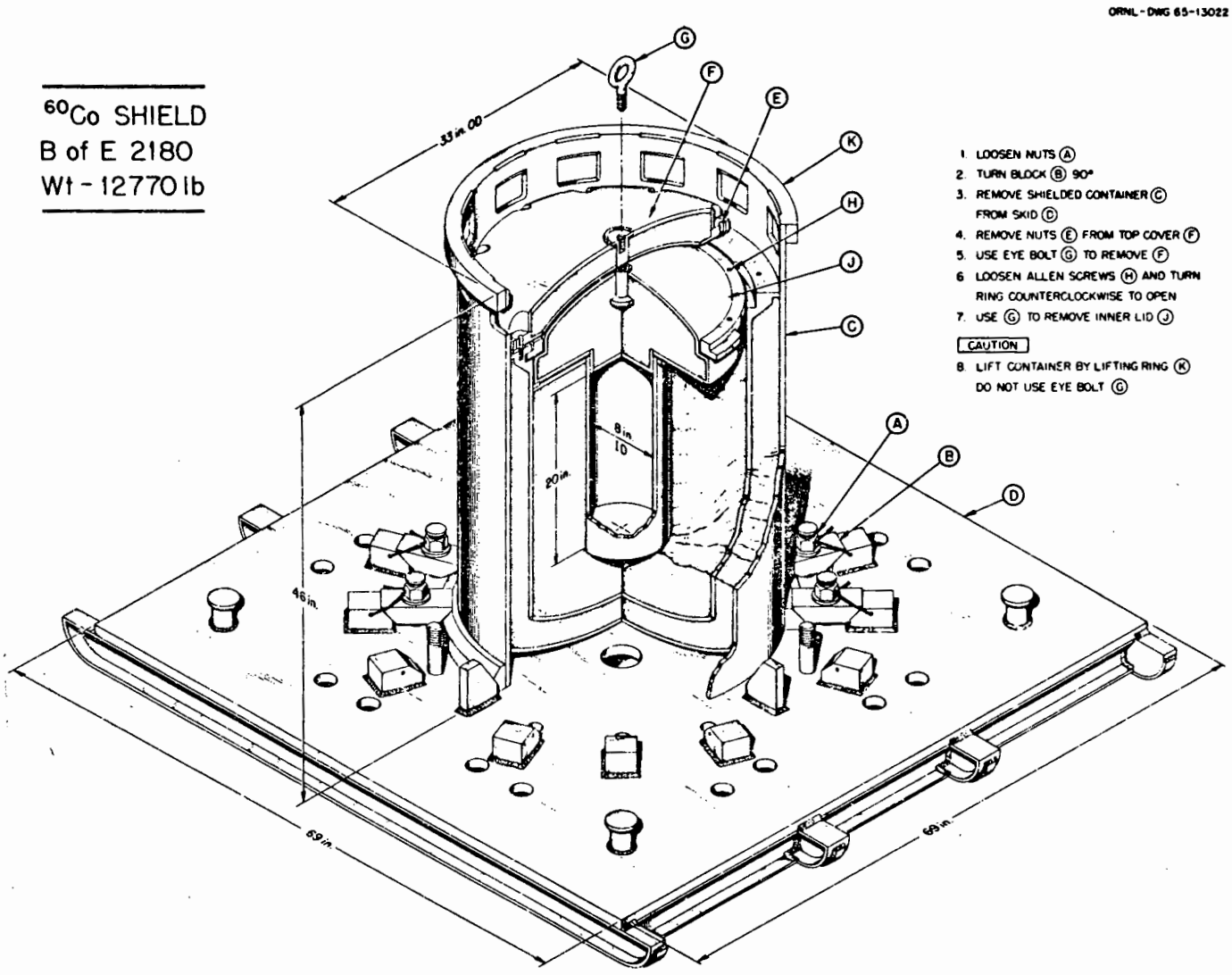

Fig. 6. Double Envelope Carrier.

CONTAINERS DE TRANSPORT POUR RADIO-ÉLÉMENTS ARTIFICIELS

(Modèle P)

ISOTOPE STORAGE AND TRANSPORT CONTAINERS

(Model P)

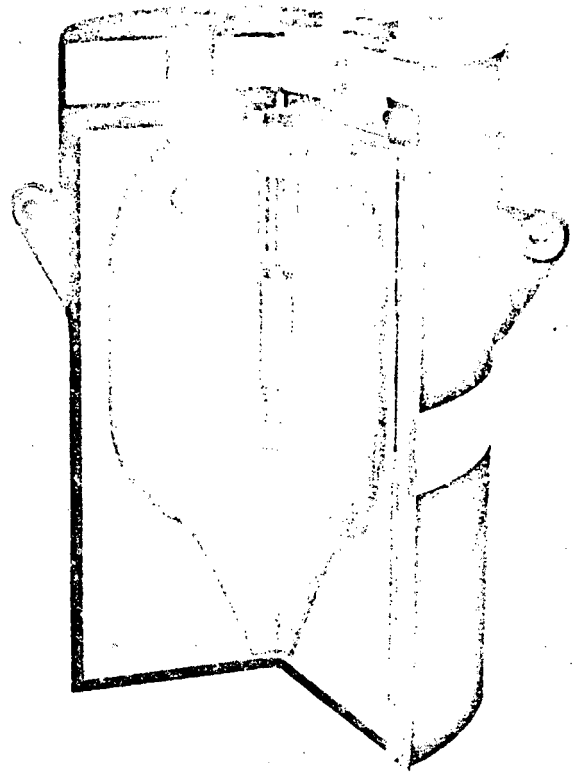

DESTINATION

Ces containers sont destinés au transport et au stockage de matière radioactive, contenue dans un tube standard à capuchon vissé ou soudé.

PURPOSE

These containers are designed for the transport and the storage of Isotopes kept in a standard box closed by a screwed or welded plug.

Fig. 7. Example of French Shielded Package.

The British have patented a fire shield which utilizes the evaporative cooling effect of the thermal decomposition of hydrated sodium borate, better known as Twenty Mule Team Borax. This decahydrate contains 48% water.

Since packages utilizing lead as radiation shielding have poor thermal accident resistance, many designers are looking at reinforced concrete, steel, and uranium as answers to regulatory requirements. These materials offer solutions to specific shielding or transport problems. Certain types of concrete offer neutron shielding; steel, although not so effective a gamma shielding as lead, has excellent impact and thermal resistance; and uranium, with twice the shielding effectiveness as lead, is a leading contender with its impact and thermal resistance and with the reduced weight of equivalent shielding.

Heat transfer is a prime design consideration for radioactive material packaging. Not only must packages remain effective in 130°F ambient air, but they must withstand solar heating as well as dissipate internal thermal decay heat. As in most equipment design work, trade-offs have to be made. A package insulated to withstand a 30-min fire, will naturally be limited as to the amount of thermal decay energy it may safely contain. Packages utilizing metal shielding, but without insulation, are excellent for the dissipation of internal thermal decay heat. The use of cooling fins on the outer shell of a package increases the thermal dissipation capabilities. The amount of thermal decay energy that a package will effectively contain must be determined in order to get regulatory approval.

Fabrication (3)

The fabrication of packages should be well documented, and materials should be ordered by specification. Shop practice should be by appropriate codes, such as the ASME Pressure Vessel Code and the Standards of the American Welding Society. Nondestructive testing should be specified. Quality control procedures developed by the Department of Defense and NASA are rapidly being recognized by AEC and DOT regulatory personnel as standards and guides in evaluating assembly proficiency in the fabrication of packages.

Testing (3)

Over the past 10 years extensive package testing has been carried out both in this country and abroad. This testing is well documented in the literature, and the information is available from the references in the Bibliography on Transportation mentioned above. It is highly probable that a search of the literature would reveal comparative test data that are applicable or can be extrapolated to apply to most existing packages and packages to be fabricated in the near future. Prior to testing a package, the comparative data approach could be used as a means of meeting regulatory requirements — i.e., use the test data of a package design that is similar or equal to the design under consideration. An engineering evaluation of a package to withstand hypothetical accidents, although more costly, will generally suffice. In the case of novel or unusual packages, documented tests on a prototype are generally necessary to answer the questions and alleviate the doubts raised by regulatory personnel. A compendium of package testing facilities under AEC control has been issued[5] by and is available from the Division of Construction, AEC Headquarters. Information may be obtained from this Division on availability of these facilities and pricing.

Approval (3)

The request for approval of the regulatory bodies for packages should be as broad as possible with regard to both present and possibly future conditions of use. Except in unusual cases, the user should not let himself be hamstrung by requesting approval for specific curie quantities of specific radioisotopes. For larger than Type B quantities, gram quantities or thermal-watt quantities should be requested, e.g., 100 W of any solid, nonfissile radioisotope. Some regulatory personnel are reluctant to give approval on this basis, but many of the packages now in use were approved on this broad-coverage basis. Disregarding the difference in radiotoxicity and shielding requirements, it stands to reason that a package that will contain 100 W of ^{60}Co will just as effectively contain 100 W of ^{244}Cm.

After a request for package approval has been made, instant action by regulatory bodies should not be expected. Generally it will take from 3 to 4 months to physically move the paper through the various regulatory agencies. This may appear to be slow, but consider the Internal Revenue Service and their review and approval of tax returns for estate settlements. They take 18 months merely to check the arithmetic. The AEC and DOT offer speedy service when you consider that they have to make the serious decisions that will affect the health and welfare of the people of this country.

In closing, permit me to quote from a letter from one of the AEC contractors regarding the evaluation of packaging:

> "In recent months, the public has shown an increasing concern about plans for the shipment of hazardous materials across our country. This concern has been demonstrated in the investigation of the movement of chemicals from the Rocky Mountain Arsenal. The Vermont Nuclear Power Town Meeting, held at the University of Vermont, and the Symposium on Nuclear Power and the Public sponsored by the University of Minnesota both aired the serious concerns of the citizenry for the possible increase of radiation and pollution of the environment from nuclear oriented enterprise. The public interest and the future of the industry demand that we take all reasonable action to verify our work."

I believe that this statement echoes the prevailing sentiment throughout the nuclear energy field.

(MG)

References (3)

1. Title 49 Code of Federal Regulations (CFR) Parts 170-190.
2. Regulations for the Safe Transport of Radioactive Materials, 1967 Edition, Safety Series No. 6, Vienna.
3. Nuclear Safety Information Center, Cask Designers' Guide, USAEC Report ORNL-NSIC-68, Oak Ridge National Laboratory.
4. Nuclear Safety Information Center, Indexed Bibliography on Transportation and Handling of Radioactive Materials, USAEC Report ORNL-NSIC-33, Oak Ridge National Laboratory.
5. USAEC Container Testing Facilities (no document number).

DEVELOPMENTS ABROAD ON RADIOISOTOPE-POWERED CARDIAC PACEMAKERS[1] (2)

Martha Gerrard

Supplementary Keywords: energy source; medicine; therapy; plutonium-238; promethium-147; safety; heart; nuclear battery; France; England; Australia.

France (3)

On April 27, 1970, at the Broussais Hospital in Paris, a cardiac pacemaker (Fig.1) that uses ^{238}Pu as the energy source was implanted[2,3] in a 58-year-old patient. The stimulator is 7 cm dia and 3 cm thick. The series now being constructed has a 23-mm-dia generator and the stainless steel has been replaced with titanium, so that the stimulator thickness is decreased and the weight is only about 160 g. The heat source is a 150-mg ^{238}Pu tablet, whose 87 years half-life gives the apparatus a useful life of about 10 years, compared to less than 2 years for cardiac stimulators based on chemical batteries. The source is 9 mm dia and 10 mm high, and the helium expansion volume is 60 mm^3. The thermal power is 75 mW. It is doubly encapsulated---one capsule of tantalum and one of platinum, each 1 mm thick and electron-welded.

The sealed source assembly and the thermoelectric converter---two rod-shaped bismuth telluride semiconductors---are inside an electron-welded stainless steel capsule, 1 mm thick and 27 mm dia. The electric power is 200 μW at 0.5 V. This power is fed to an electronic circuit that uses 160 μW, with a useful life of more than 10 years. The source power loss is 0.5 mV per month. The electrodes are epoxy clad. The generator has undergone prolonged and severe mechanical and thermal tests, and numerous safety tests have been made on the sealed capsule---leak tightness and shock, crushing, and fire resistance.

The electronics include a hysteresis type pacemaker relay with magnetic triggering. The implanted stimulator delivers to the patient's heart pulses of 0.92 msec at 6.8 V with an energy of 41.6 μjoules. The measured stimulation

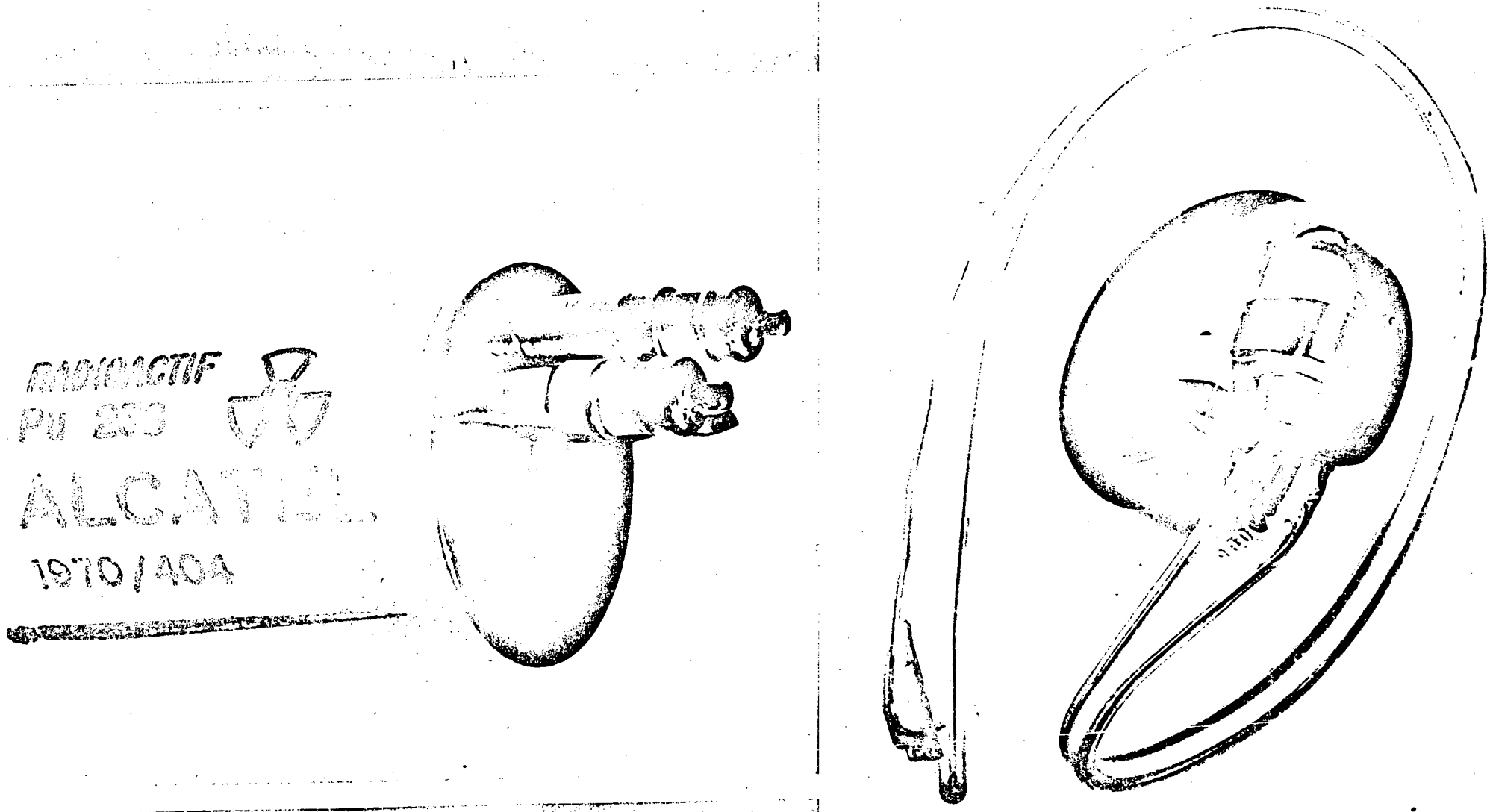

Fig. 1. (a) French cardiac pacemaker and (b) ^{238}Pu battery that powers it.

threshold was 0.54 μjoules with myocardiac electrodes implanted on the right ventricle (xiphoumbilical path). The pulse frequency corresponds to a period of 816 msec, or 73 per minute.

At contact with the stimulator, very close to the ^{238}Pu, the gamma and neutron doses are 1.9 and 1.2 mrem/hr, respectively. On the patient's skin---an average of 21 mm from the stimulator surface---these doses are 0.25 and 0.17 mrem/hr. Two dogs have carried similar sources for 1 year without any significant biological changes being noted. Tissues in contact with the stimulator are heated < 0.1°C above normal.

The myocardial electrode wires implanted in the patient have undergone tests in an accelerated test unit. A single-thread platinum wire irradiated in nonjoined spirals underwent 332 million flexions with a 7-mm radius of curvature and a 45 degree angle without breaking, while all other types of wires used for pacemakers had already broken.

The stimulator implanted in the patient is checked every month. The stimulator delivers a pulse only when the beat of the heart itself is below the stimulator control threshold.

The ^{238}Pu source was developed by René Berger and René Boucher, Commissariat à l'Energie Atomique, Fontenay-aux-Roses; the thermoelectric converter by M. Alais, Société Alcatel, Paris; the electronic circuits and controls by Pieter Mulier, Medtronics, Minneapolis, USA, who now market conventional pacemakers and have reached an agreement[4] with ALCATEL to market the ^{238}Pu pacemakers on an exclusive basis, possibly by 1975 (pending USAEC approval). Animal experimentation and clinical application were done by Professor Armand Piwnica, with Professor C. Dubost, Hôpital Broussais, Paris.

United Kingdom (3)

Two successful animal implants of nuclear-powered heart pacemakers have taken place in the U.K.[5] The first was carried out in a London hospital on Friday, 13th February, 1970, and the second in a Glasgow hospital on 20th March,

1970. Both animals---dogs---have so far responded well. The nuclear battery contains ^{238}Pu and is 2 in. long and about 0.5 in. across. It weighs about 1 oz and is designed to last for a minimum of 10 years. There is no radiation hazard to the patient, or to anyone else, from the small quantity of plutonium used and the battery is fully encapsulated to prevent the escape of radioactive material or attack from body fluids.

The battery was developed at Harwell in close collaboration with the Institute of Cardiology and the National Heart Hospital. Active discussions are going on with a U.K. firm about the manufacture and marketing of the battery at home and overseas, assuming that the exhaustive trials now proceeding will prove the device before its use in patients.

Australia (3)

The Nuclear Research Centre at Lucas Heights is assessing the possibilities of radioisotopic pacemakers in collaboration with the National Heart Foundation.[6] Contrary to developments in the U. S. and in Europe where mainly ^{238}Pu heat sources are used, the Australian concept is based on ^{147}Pm, alternate layers of ^{147}Pm and silicon crystals being used to generate electricity.[7] The power of the heat source is expected to be about 200 μW. The developer, F. C. Gatt, hopes eventually to be able to generate a 40-μA current at 5 V.

Safety (3)

A joint group of experts has been established[8] to draw up safety guidelines for the design and construction of radioisotopic pacemakers and to examine technical, legal, and administrative problems arising from their wide use. The group will be composed of specialists on the safety of nuclear pacemakers from the ENEA Study Group on Isotopic Batteries, Canada, United Kingdom, and United States as well as members of the ENEA Health and Safety Committee. They will investigate various facets of the problem, for example, how the plutonium battery would hold up in an airplane crash, accidental cremation, or other accidents. The need for such study is indicated by, to mention only a single incident, the difficulty experienced by France's first nuclear pacemaker recipient when she

tried to visit Spain. It took a special French-Spanish agreement to permit the trip.[9]

References (3)

1. Progress in Radioisotope-powered Pacemakers, Isotop. Radiat. Technol. 8(2):

2. First Implantation of a Nuclear Cardiac Stimulator Ever to Be Implanted in a Human (in French), Newsletter (Information Bulletin on Isotopic Generators and Batteries of the ENEA) 1(1): 2 (June 1, 1970).
3. Paul Laurens, ANS Meeting, Washington, Nov. 1970 (DTIE: reference in ANS proceedings will be supplied later)
4. Medtronics Inc. Has Reached Agreement, Nucleonics Week July 9, 1970, p. 8.
5. Nuclear-powered Heart Pacemakers, Atom No. 163: 100 (May 1970).
6. Nuclear Pacemaker Also Developed in Australia, Newsletter (Info. Bull. on Isotopic Generators and Batteries, ENEA, Paris) 1(1):4-5 (June 1, 1970).
8. ENEA Joint Group of Experts to Prepare International Standards for Radioisotopic Pacemakers, Newsletter (Ibid) 1(1): 5 (June 1, 1970).
9. ENEA Looking at Travel Problem of People with Nuclear Pacemakers, Nucleonics Week July 9, 1970, p. 8.
7. Isotope News from Australia, Nuclear News 13(8): 35 (1970); also in At. Energ. Australia 13(1): 37 (Jan. 1970).

ISOTOPE GROUP OF SWEDEN CELEBRATES 10 YEARS OF OPERATION

On May 26, 1970, Isotope Techniques Laboratory (ITL) of Stockholm observed its tenth year of service to industry. Seligman, of the IAEA, was a featured speaker.[1] He briefly reviewed the history and economics of isotope use and predicted a continuing expansion in this field. He said, in part:

"There will be a big increase in the use of isotopes and radiation for the well-known applications and a number of new ones will develop. If I may make a prediction---companies like ITL are still at the beginning of an exponential graph which for the next 10 years or even a generation---will not change its direction.

"Let us sum up with what the future will bring for large radiation sources. If we leave aside the already established industries, like sterilization of medical products and cross linking of polyethylene as well as the curing of paint, we can foresee the curing of rubber latex, the butadiene grafting of polyvinylchloride. The sulphoxidation of alkanes to produce detergents, although not looking too good, has already been claimed to be a success by at least one country. The copolymerization of ethylene and carbon monoxide might give new polykeytones and the copolymerization of ethylene with vinyl acetate might result in novel elastomers. A new field may be the production of novel ion-exchange materials from polyethylene or Teflon by grafting.

"On the sterilization front, we can prevent the formation of algae growth, for example, in cooling water. It may also have an influence in the fermentation industry. Some work is proceeding on transmutation doping for p/n junctions to the advantage of microcircuitry.

"Radiation-chemical synthesis---like the chlorination of methane, toluene, or benzene---may at last become an economic proposition; also the oxidation of toluene

is a possible one. The novel use of sensitizers might not only reduce the dose necessary for a certain process, but it might also have a directional effect on the preference of radiation-induced reactions. This could lead in the further future to the solid establishment of a radiation chemical industry which I predicted 15 years ago!"

(MG)

Reference (3)

1. H. Seligman, Industrial Isotope Application, Yesterday, Today and Tomorrow (English), Isotopnytt No. 42: 1-8 (July 1970).

AVAILABILITY OF ISOTOPES AND SERVICES (2)

ORNL Enriched Stable Isotope Inventory (3)

(DTIE: This table will be sent in later.)

Isotopic Separations (3)

(DTIE: This information will be sent in later.)

GE Announces Availability of ^{99}Mo (3)

Fission product ^{99}Mo is now available from General Electric Co., Vallecitos, Cal. The isotope, which is >99.99% pure and has a specific activity of >5 thousand Ci/g, is the parent of ^{99m}Tc, which is used in medicine to detect lesions in the brain, kidneys, lungs, liver, and other organs. The ^{99}Mo was introduced at a price of $225 per curie, pre-calibrated for four days from the date of scheduled delivery, with a packaging charge of $100.

New Isotope Shipping Container (3)

Aeroquip Corporation/Marman Division, 11214 Exposition Boulevard, Los Angeles, Calif. 90064, offers a new isotope shipping container which incorporates a 1-in. Conoseal Joint closure. The new capsule eliminates the necessity for remote welding, permits clean assembly, and is inexpensive enough to be discarded after one use.

Lockheed to Close Nuclear Lab. (3)

Lockheed-Georgia is closing, at least temporarily, its nuclear laboratory in Dawsonville, Ga. This laboratory, acquired from the U. S. Government in 1965, opened in 1957 for research on nuclear-powered aircraft and was later used for study of effects of radiation on equipment, for nuclear equipment development, and for wood-irradiation research.

Cornell Course in Radiation Techniques in Animal Sciences (3)

A training course on advanced techniques involving radioisotopes and radiation in animal science and veterinary medicine was sponsored at Cornell University in Ithaca, N. Y., by the International Atomic Energy Agency and the Food and Agriculture Organization. Twenty scientists and educators from 19 countries attended the six-week session from July 20 through September 4, 1970. The U. S. Atomic Energy Commission assisted in making arrangements for the course.

Professor C. L. Comar, Head of Physical Biology and Director of the Laboratory of Radiation Biology and a pioneer in such techniques [Isotopes and Radiation Technology 4(1)], was director of the course and responsible for its organization and administration. He also lectured on principles and practices of radioisotope usage in biological research. This training course was the ninth sponsored by the FAO-IAEA in the United States for foreign students.

Directory of High-energy Radiotherapy
Centres, 1970 ed., IAEA,
Vienna, 1970 (203 pp, $5.00)

The second edition of the Directory (first edition in 1968) lists, by city, 1670 centers in some 80 countries where radioisotope, both ^{60}Co and ^{137}Cs, and other high-energy teletherapy equipment (e.g. betatrons, linear accelerators, and Van de Graaff machines) are installed. Besides such information as address, energy of source and dose rate, model and manufacturer of equipment, and personnel employed, detailed tables are given showing distribution of centers by country, number of units installed per year, and other appropriate breakdowns of data.

The book should prove useful for anyone doing teletherapy work.

(MG)

Supplementary Keywords: medicine; therapy; accelerator; worldwide; cobalt-60; cesium-137.

AEC ACTIVITIES (2)

AEC Lab Develops Nuclear Probe to Spot Minerals on Ocean Floor (3)

A neutron probe, based on ^{252}Cf, for detection of minerals on the ocean floor has been successfully demonstrated by scientists at the Atomic Energy Commission's Pacific Northwest Laboratory at Richland, Washington. The undersea probe can determine gold, silver, copper, manganese, and some 25 other elements in quantities as low as 1 oz/ton in 3 to 5 min. The device is designed to operate from either a surface ship or submersible vehicle. The new technology uses ultra-low level and rapid neutron activation analysis. The ^{252}Cf emits neutrons which, when absorbed by the elements in question, induce a gamma radiation that is proportional to the amount of element present.

In the initial test, 200-lb mineral samples containing gold, silver, copper, and manganese were placed on the ocean bottom at Sequim Bay, Wash. The elements were detected and their amounts measured with a probe containing 0.2 mg of ^{252}Cf. The californium source was in a sealed stainless steel cylinder approximately 0.5 in. dia and 3 in. long, located at the end of the probe. A 1- or 2-min exposure of an area a few inches in diameter on the ocean floor is required, followed by a similar counting period with the detector. There is no environmental problem — the residual radioactivity in the ocean floor is nondetectable several hours after the irradiation.

Battelle-Northwest's research and development program calls for the development of a working prototype instrument which can be used for mapping minerals at depths of a thousand feet.

^{252}Cf Information Center (3)

A ^{252}Cf information center has been established at the AEC's Savannah River Plant. The growing number of inquiries about the ^{252}Cf market evaluation program, as well as technical questions about ^{252}Cf, have made it necessary to centralize and make readily available such information. A current bibliography of published literature on ^{252}Cf will be maintained. Questions will be directed to appropriate groups for answers.

Information regarding participation in the market evaluation program, copies of the brochure and progress reports, and information and answers to questions about ^{252}Cf may be obtained by telephoning 803-824-6331, ext. C-252, or writing to

Manager
Savannah River Operations Office
U. S. Atomic Energy Commission
Post Office Box A
Aiken, South Carolina 29801

First Space Atomic Battery to Begin Tenth Year of Operation (3)

The first space atomic battery, developed by the AEC, is heading into its tenth year in orbit. The grapefruit-size radioisotope thermoelectric generator, SNAP-3A, was launched June 29, 1961, from Cape Kennedy on a navigational satellite, and the generator has already operated four years beyond its five-year design life. It was designed to convert the heat given off by the ^{238}Pu fuel directly into 2.7 W of electricity. The prime contractor was the Martin Company, Baltimore.

Development of the SNAP series has continued, with SNAP-27 placed on the moon in 1969 [see Isotopes and Radiation Technology 7(4): 443-7; 449-51 (Summer 1970); and pp. in this issue].

AEC Exhibits Continue (3)

"Life Science Radiation Laboratory," an Atomic Energy Commission traveling exhibit featuring live demonstrations of the use of radiation in research, began showings on July 17 at the Columbus, Ohio, Center of Science and Industry. The exhibit uses live animals, insects, fish, and growing plants as well as inorganic materials to illustrate beneficial uses of radiation in biology, agriculture, and medicine. Demonstration experiments include exposing garden seeds, plants, and inorganic materials to radiation, and using radioisotopes as tracers to follow activities of animals and insects. The spectator and the demonstrator study the results together.

"Your Stake in the Atom" Exhibit (3)

"Your Stake in the Atom," the AEC's traveling educational program designed principally for state and local fairs, began its tenth season on the road on July 29 at the Central Wyoming Fair and Rodeo in Casper. The four-day Casper showing was the first of eight appearances at fairs in five western states, with the season continuing through early November. "Your Stake in the Atom" is operated for the AEC by Oak Ridge Associated Universities (ORAU), Oak Ridge, Tenn., and consists of 100 linear feet of colorful and animated display panels explaining the nation's nuclear energy research and development programs. Housed in a geodesic "Exhibidome," 50 ft dia and 25 ft high, the exhibit is manned by a specially trained science teacher-demonstrator and includes a demonstration of remote-controlled mechanical hands.

AEC Revises Inspection and Maintenance for Radiography Equipment (3)

The Atomic Energy Commission plans a change in its regulations to require licensees doing radiographic work to have programs for the inspection and maintenance of radiography equipment. Under a proposed amendment to Part 34, CFR, a licensee authorized to use sealed radioactive sources in radiography would be required to have an inspection and maintenance program for the radiographic exposure devices and storage containers which he uses. The licensee could either incorporate the recommendations of the equipment manufacturer into his program or could independently prepare instructions for consideration by the Commission. The licensee's program for inspection and maintenance of radiography equipment would be subject to periodic inspection by the Commission's Division of Compliance.

The proposed amendment is intended to reduce the number of radiation exposures attributable to improperly maintained equipment. The new regulations would be effective within 60 days after publication of notice in the Federal Register on June 26, 1970.

(DTIE: This item may require revision after Aug. 1970.)

Supplementary Keywords: regulation; safety.

AEC Advisory Committee (3)

Three new members have been named to AEC's Advisory Committee on Isotopes and Radiation Development: Vincent P. Guinn, chemistry professor at University of California at Irvine; Bernard Manowitz, head of the Brookhaven National Laboratory Radiation Division; and Edwin A. Wiggin, technical projects manager for the Atomic Industrial Forum. Ira L. Morgan, director of the University of Texas Center for Nuclear Studies, has been appointed chairman.

GENERAL (2)

Food Irradiation in Canada (3)

Supplementary Keywords: food preservation; industry; industry, food; review, popular; agriculture.

The status of the food irradiation program in Canada was reviewed recently for Nuclear Canada.[1] Canada has approved the use of radiation on three foods, but no private firm in the country is operating an irradiator for this purpose. An abortive attempt to sell irradiated potatoes on a commercial basis was a setback.[2] In Canada, as in the United States, the government is emphasizing high priority projects at the expense of exploratory studies.

The top priority studies supported by Atomic Energy of Canada Ltd. (AECL) have been the radurization of fresh fish and eviscerated poultry. Petition data will be supplemented with data from the Netherlands for irradiated chicken and from the United Kingdom for irradiated fish. Chickens are irradiated to 0.7 Mrad. The fish---haddock---will be given doses of 200 krads, although research in Canada has shown that high-quality fillets have an extended shelf-life after a dose of only 100 krads.

The AECL mobile irradiator was used in 1968 to treat scallops, plaice, and yellow flounder. A dose of 225 krads increased the shelf-life of scallops by 8 days. The optimum dose for plaice and yellow flounder is evidently between 75 and 150 krads.

Radurization of round steak has shown that 500 krads provides a shelf-life of 3 weeks at 40°F; controls were spoiled at 10 days. However, flavor changes were apparent in the irradiated meat; a lower dose will be used, with less gain in shelf-life. Studies on the rehydration of irradiated freeze-dried beef have been completed. The University of British Columbia is studying the effects of pasteurizing doses of radiation on protein and lipid fractions in red meat.

[1] Food Irradiation, Nucl. Canada, 9(7): 12-14 (July-August 1970).
[2] First Commercial Food Irradiator Bankrupted by Crop Failure, Isotop. Rad. Technol., 4(2): 203 (Winter 1966-1967).

Salmonella studies have shown that a dose of 500 krads will eliminate this pathogen from ground beef without affecting the Vitamin A content. The same proved true of Staphylococcus aureus in cured meats. Salmonella research at the University of Manitoba showed that a dose of 700 krads will reduce this pathogen adequately in a frozen egg substrate. The University of Alberta showed that a dose of more than 400 krads is needed to control salmonella in skim milk powder, but this dose causes development of an off-flavor.

Other products being studied include mushrooms and strawberries. A petition has been submitted to the government to approve mushrooms; it includes data from the Netherlands, which has cleared the use of radiation to retard cap opening of mushrooms. Because of the short growing season in Canada, strawberries do not have the high priority on obtaining clearance there that they do in the United States. Other studies are underway on blueberries, cherries, and cranberries. Doses used are up to 500 krads. Apple juice has been irradiated up to 600 krads with no change in pH and acidity, but there are changes in pectin and sugars.

Related programs using radiation in agriculture involve the use of low doses on seeds to stimulate growth and the sterilization of diets for laboratory animals. Crops studied included sweet corn, tomato, lettuce, egg plant, onion, cucumber, strawberry, rutabaga, green beans, field corn, barley, flax, spring wheat, durum wheat, oats, and grasses. Encouraging results have been obtained wihh cucumbers and strawberries. In addition to laboratory animal diets, poultry feed has been treated successfully with 1 Mrad to reduce salmonella infection: (FEM)

^{60}Co Sewage Treatment Plant Installed

A sewage treatment plant, designed and constructed by Energy Systems, Inc., of Melbourne, Fla., has been installed at a campground near Palmdale, Fla. The gamma radiation from ^{60}Co degrades up to 95% of the detergents present, whether biodegradable or not. Algae growth is inhibited. There is no residual activity, and operation, since startup in March 1970, has been economically competitive with conventional sewage treatment processes. The ^{60}Co source and accessory equipment can be added to existing treatment plants.

Amersham Receives Queen's Award (3)

For the second time in three years the Queen's Award to Industry has been made to the U. K. Atomic Energy Authority. It was awarded to the Authority's Radiochemical Centre, Amersham, for technological innovation in the production of the radioisotope ^{14}C and its compounds. In 1967 the Centre received the Queen's Award for export achievement and for technological innovation in the production for sale of radioisotopes for use in industry.

New Technique for Nondestructive Determination of Protein Quality (3)

A new technique for determining the quality of protein---for example, that in cereal grains---is announced by the Lawrence Radiation Laboratory (LRL) at Berkeley, Calif., operated by the Univ. of Calif. (UC) for the USAEC. Melvin P. Klein, physicist at LRL, and L. N. Kramer, graduate student in chemistry at UC, developed the method. Proteins are composed of more than 25 different amino acids, some of which are "essential," i.e., they cannot be synthesized by the human body. The new method identifies the individual acids, while previous methods have determined only the total protein.

The instrument used in the new procedure is an x-ray photoelectron spectrometer. Cereal grains under study are exposed to the radiation from an x-ray source in the instrument. As a result, electrons are emitted with energy patterns typical for each of a number of amino acids. Seed samples do not need to be destroyed. A portion of a seed can be tested and, if the sample is promising, the remainder of the seed can be planted and will grow. In this way mutants can be selected on a scientific rather than a trial-and-error basis, and faster progress in developing the desirable grains may result. It has been estimated that a 10 to 20% increase in quantity and quality of proteins in grains could have an enormous impact on world food supplies without changing agricultural or dietary habits.

Supplementary Keywords: biochemistry; nutrition; x-ray machine; agriculture; measurement, other.

[redacted]

INTERNAL DISTRIBUTION

1- 4. P. S. Baker
5. F. R. Bruce
6. J. H. Gillette
7. D. S. Napolitan (K-25)
8-10. C. P. Keim
11. A. F. Rupp
12. M. J. Skinner
13. Laboratory Records (RC)
14. Central Research Library

EXTERNAL DISTRIBUTION

15. Roland A. Anderson, Asst. General Counsel for Patents, USAEC, Washington, D. C. 20545.
16-21. H. B. Atkinson, DTI, USAEC, Washington, D. C. 20545
22. Battelle Memorial Institute, Pacific Northwest Laboratory, P. O. Box 999, Richland, Washington 99352.
23. B. F. Boardman, Idaho Nuclear Corp., P. O. Box 1845, Idaho Falls, Idaho 83401.
24-26. E. T. Bond, DTIE, AEC, P. O. Box 62, Oak Ridge, Tenn. 37830.
27. R. W. Dayton, Battelle Memorial Institute, 505 King Ave., Columbus, Ohio 43201.
28. W. E. Dreeszen, Ames Laboratory, Iowa State University, Ames, Iowa 50010.
29-30. Alvin Glassner, Argonne National Laboratory, 9700 S. Cass Ave., Argonne, Ill. 60440.

31-32. John C. Dempsey, DID, USAEC, Washington, D. C. 20545.
33. John A. Koch, Savannah River Patent Group, SROO, USAEC, P. O. Box A, Aiken, S. C. 29801.
34. Stephen Lawroski, Argonne National Laboratory, 9700 S. Cass Ave., Argonne, Ill. 60440.
35. George H. Lee, Chicago Patent Group, Chicago Operations Office, USAEC, 9800 S. Cass Ave., Argonne, Ill. 60439.
36. Los Alamos Scientific Laboratory, P. O. Box 1663, Los Alamos, N.M. 87544.
37. S. W. O'Rear, SRL, E. I. Du Pont de Nemours, Inc., Aiken, S. C. 29801.
38. H. S. Potter, New York Patent Group, Brookhaven National Laboratory, Upton, L.I., New York 11973.
39. Dennis Puleston, Head, Information Div., Brookhaven National Laboratory, Upton, L.I., New York 11973.
40. F. A. Robertson, California Patent Group, USAEC, San Francisco Operations Office, Livermore, Calif. 94550.
41. H. M. Roth, USAEC, ORO.
42. C. G. Stevenson, Manager, Technical Information, Battelle-Northwest, P. O. Box 999, Richland, Washington 99352.
43. D. S. Zachry, Jr., USAEC, ORO.

[redacted]