OAK RIDGE NATIONAL LABORATORY

operated by

UNION CARBIDE CORPORATION

for the

U.S. ATOMIC ENERGY COMMISSION

ORNL-TM-2819

53

LMFBR FUEL CYCLE STUDIES PROGRESS REPORT FOR DECEMBER 1969, NO. 10

NOTICE This document contains information of a preliminary nature and was prepared primarily for internal use at the Oak Ridge National Laboratory. It is subject to revision or correction and therefore does not represent a final report.

0002495

CTD/ADM-DMC

LEGAL NOTICE

This report was prepared as an account of Government sponsored work. Neither the United States, nor the Commission, nor any person acting on behalf of the Commission:

A. Makes any warranty or representation, expressed or implied, with respect to the accuracy, completeness, or usefulness of the information contained in this report, or that the use of any information, apparatus, method, or process disclosed in this report may not infringe privately owned rights; or

B. Assumes any liabilities with respect to the use of, or for damages resulting from the use of any information, apparatus, method, or process disclosed in this report.

As used in the above, "person acting on behalf of the Commission" includes any employee or contractor of the Commission, or employee of such contractor, to the extent that such employee or contractor of the Commission, or employee of such contractor prepares, disseminates, or provides access to, any information pursuant to his employment or contract with the Commission, or his employment with such contractor.

ORNL-TM-2819

Contract No. W-7405-eng-26

CHEMICAL TECHNOLOGY DIVISION
METALS AND CERAMICS DIVISION

LMFBR FUEL CYCLE STUDIES PROGRESS REPORT FOR DECEMBER 1969, NO. 10

I. AQUEOUS FUEL REPROCESSING
W. E. Unger, R. E. Blanco, D. J. Crouse, A. R. Irvine, C. D. Watson

II. FUEL MATERIAL PREPARATION
R. G. Wymer, R. E. Brooksbank, R. E. Leuze, J. P. Nichols
W. D. Bond, P. A. Haas

III. FUEL FABRICATION AND EVALUATION
A. L. Lotts, C. M. Cox, J. D. Sease, T. N. Washburn

JANUARY 1970

OAK RIDGE NATIONAL LABORATORY
Oak Ridge, Tennessee
UNION CARBIDE CORPORATION
for the
U. S. ATOMIC ENERGY COMMISSION

Previous issues of this report are listed below.

1. ORNL-TM-2552
2. ORNL-TM-2585
3. ORNL-TM-2624
4. ORNL-TM-2650
5. ORNL-TM-2671
6. ORNL-TM-2710
7. ORNL-TM-2748
8. ORNL-TM-2764
9. ORNL-TM-2795

CONTENTS

Page

ABSTRACT 1

HIGHLIGHTS 1

I. AQUEOUS FUEL REPROCESSING

1. Shipping (Task 1) 3
2. Receiving and Storage (Task 2) 6
3. Head-End Processing of LMFBR Fuels (Task 3) 7
4. Volatile Fission Product Removal (Task 4) 11
5. Dissolving (Task 5) 11
6. Feed Preparation (Task 6) 13
7. Solvent Extraction (Task 7) 16
8. Plutonium Purification (Task 8) 30
9. Waste Treatment and Storage (Task 9). 30
10. Off-Gas Treatment (Task 10) 31
11. Radiation and Shielding (Task 11) 36
12. Criticality (Task 12) 38
13. Engineering Studies (Task 13) 40

II. FUEL MATERIAL PREPARATION

1. Conversion Studies 48
2. Sol-Gel Processing for Preparation of LMFBR Recycle Fuel 51

III. FUEL FABRICATION AND EVALUATION

1. Fabrication Development 60
2. Fuel Evaluation 69

LMFBR FUEL CYCLE STUDIES PROGRESS REPORT FOR DECEMBER 1969, NO. 10

ABSTRACT

This report continues a series outlining progress in the development of methods for the reprocessing and fabrication of LMFBR fuels. Development work is reported on problems of irradiated fuel transport to the processing facility, the dissolution of the fuel and the chemical recovery of the PuO_2-UO_2 values, the containment of volatile fission products, product purification, preparation of fuel material by the sol-gel process, conversion of fuel processing plant product nitrate solutions to solids suitable for shipping and for fuel fabrication, fuel fabrication of sol-gel materials, and fuel evaluation studies, both in-pile and out-of-pile. Pertinent experimental results are presented for the information of those immediately concerned with the field. Detailed description of experimental work and data are included in topical reports and in the Chemical Technology Division and Metals and Ceramics Division Annual Reports.

HIGHLIGHTS

Division I

Preliminary heat transfer calculations indicate that canisters containing short-decay fuel subassemblies and housed inside a shipping cask containing up to 19 canisters will not reach temperatures sufficient to cause canister failure provided that there is substantial axial heat transport within the canister and that the canister material has substantial strength at temperatures approaching 1500°F. An expansion and revision of an earlier evaluation of LMFBR fuel shipping has been started. (Sect. 1.1)

Curves are presented for calculating the center pin cladding temperatures of intact LMFBR arrays for the case in which radiant heat transfer is controlling. (Sect. 3.1)

Tentative solvent extraction flowsheets for processing FTR fuel have been outlined with the help of the computer code SEPHIS. The expected distributions of plutonium and uranium between the aqueous and organic phases in the extraction and stripping systems are specified. (Sect. 7.1)

In preliminary laboratory tests, exposure of TBP solvent to light in the presence of uranium and nitric acid resulted in appreciable retention of the uranium by the solvent in the stripping step. (Sect. 7.2)

Butyl iodide was trapped very efficiently from air streams with iodized charcoal, silver impregnated alumina, and silver zeolite, with the last being the most effective. (Sect. 10.1)

Calculations indicate that an infinite planar array of FFTF or LMFBR elements, spaced on 1-ft centers, will be subcritical if the voids are filled with either air, water, or sodium. (Sect. 12.1)

Material balance flowsheets for an existing reprocessing facility were prepared based upon discharge material from four different reactors. (Sect. 13)

Division II

Glass equipment designed to simulate the operation of engineering equipment has been used successfully repeatedly to prepare plutonia sols (the APEX Process) suitable for mixing with urania sols made in a variety of ways, including the CUSP Process. After mixing, the sols are kept chilled to prevent thickening. If the mixed sol is kept chilled until formed into spheres, it behaves very satisfactorily through sphere forming. All sol combinations studied in the present series may be formed into microspheres with high yields (>90%). A wide range of forming conditions can be tolerated when the sol system is optimized to obtain the highest metal concentration and lowest nitrate-to-metal ratio consistent with sol stability. (Sect. 2.2)

Division III

Ten $(Pu_{0.20}, U_{0.80})O_2$ fuel rods, five with pellets and five by the Sphere-Pac process, have been fabricated for the ETR irradiation capsules 43-120 and 43-121. Assembly of these instrumented capsules is now in progress. (Sect. 1.1.2)

SG-3, the third capsule in a series of instrumented irradiation experiments in the ORR (Oak Ridge Research Reactor) to determine the thermal performance of sol-gel-derived $(U,Pu)O_2$, was inserted on December 7, 1969. To date, the capsule has operated satisfactorily to a maximum central temperature of 1100°C. (Sect. 2.2.3)

The second of the two Series I TREAT experiments was returned to ORNL and postirradiation examination of the two capsules is now in progress. The capsules have been disassembled and detail examination of the fuel pins has begun. (Sect. 2.2.4)

I. AQUEOUS FUEL REPROCESSING

(W. E. Unger, R. E. Blanco, D. J. Crouse, A. R. Irvine, C. D. Watson)

1. SHIPPING (TASK 1)

(A. R. Irvine, J. D. Rollins, R. S. Lowrie, R. L. Cox, J. H. Evans)

The objective of Task 1 is to assure that an economic and safe method of shipment of LMFBR spent fuel will be available when needed for transport of fuel from the demonstration and early commercial LMFBR's. The work involves analytical studies of the various facets of the problem; design, construction, and test of components, and of assemblies; and preliminary design of prototype casks.

The bulk of the effort on this task is directed toward expanding the store of information on the effectiveness of sodium as a primary coolant and of cask design features which can assure containment of coolant (and fission products) within the cask fuel cavity. Other coolants (including gases, liquids, and solids) have been considered, but they do not appear to be as attractive as liquid sodium.

Work performed during this report period was primarily in the areas of Tasks 1.1 through 1.4, which deal with evaluation and test of heat dissipation methods and of cask integrity.

Reportable accomplishments include the following:

1.1 Evaluation of Heat Dissipation Methods (Task 1.1)

A. Preliminary heat transfer calculations were made to determine the maximum fuel canister temperature in 7- and 19-element (AI Follow-on subassembly) casks under a loss-of-coolant (secondary) condition. It was assumed that decay heat was dissipated by radiation only from the intact sodium-filled canisters (containing one fuel subassembly each) to the wall of the cask cavity. The above configurations represent the situation wherein primary coolant (sodium) is contained within fueled canisters (of unspecified closure) under accident conditions and secondary coolant (e.g., sodium, lead alloy, or organic liquid) outside the canisters is lost. Results of the calculations are given in Table 1.1.

These data will be useful in establishing the minimum decay period required to prevent fuel pin failure during shipment. Of course, other pertinent data such as the temperature gradient across the sodium-filled canister and the temperature at which highly irradiated LMFBR fuel cladding will rupture (fail) must be determined before precise decay periods can be established. Data of the latter type will be obtained under other tasks (Tasks 1.2 and 1.9) of this program.

Table 1-1. Maximum Fuel Canister Temperatures in Casks Containing 7 and 19 AI Follow-On LMFBR Fuel Subassemblies Under Loss-of-Coolant Condition As a Function of Decay Time

Decay Time	Maximum Fuel Canister Temp.,[1] °F		
Days	7-Element		19-Element
30	1105	(1700)[2]	1430
60	970	(1512)	1265
90	895	(1415)	1165
120	835	(1300)	1100
150	785	(1260)	1035

(1) Based on uniform heat flux over the full length (15 ft) of the fuel canister (i.e., assumption of ideal heat transport by sodium).

(2) Values in parentheses are based on heat flux over a 43-in. section (active fuel length) of the fuel canister (worst case).

1.2 Heat Dissipation Tests (Task 1.2)

Work is still being delayed while replacements for defective heaters are being manufactured. A total of 91 replacement heaters have now been completed, 32 of which have been delivered and 56 of which are now in transit to Oak Ridge. The number required for startup is approximately 200.

1.3 and 1.4 Cask Integrity Studies and Tests (Tasks 1.3 and 1.4)

B. Efforts were initiated to rework a seal test block (which, with corresponding plug, simulates a shipping cask port opening and seal) to allow He leak detection at rates of 1×10^{-8} cc/sec or lower. The test block had been previously fabricated, tested, and its leakage detected (by the water displacement method) by the Gamah Corporation (see ORNL-TM-2795).

Test equipment is being modified and corresponding tests are being planned wherein a Baldwin press will be utilized to accurately measure the retaining force required for sealing when the proposed breach-lock clamp (1-mil relaxation of seal ring after locking) is used.

C. Cask modeling tests were conducted with impact specimens of 1:9.34 scale. However, graphical representations of force-time data recorded with load cell-oscilloscope equipment during testing exhibited anomalous characteristics (dual maxima). Subsequent investigation revealed that the problem was due to kinetic energy dissipation via bi-directional movement of the impact surface (armor plate) at the base of the drop tower. The necessary repairs (welds) were made and testing will be resumed the first week in January, 1970.

D. We were unable to obtain sealing with a metal vee seal assembly. The unit was sent to the gasket manufacturer for his examination to determine the cause of failure.

1.9 Engineering Evaluation of LMFBR Fuel Shipment (Task 1.9)

E. Efforts to revise and expand ORNL-CF-68-12-24 (An Engineering Evaluation of LMFBR Fuel Shipment) were initiated. Calculations were performed to determine approximate internal temperatures in a given cask configuration under accident conditions (see paragraph (A) under Task 1.1). Results of these calculations will be included in the Heat Transfer Section of the modified ORNL report. Other activities included calculations of fuel clad failure temperature for typical LMFBR fuel pins based on experimental stress-rupture data for neutron fluences (clad exposures) up to 1×10^{22} n/cm^2 ($E > 0.1$ Mev). Details of these calculations will be reported later.

Work during the following report period will continue along the same general lines. Additional cask model testing and in situ seal (1/6 scale) testing are planned. Revision and expansion of ORNL-CF-68-12-24 (An Engineering Evaluation of LMFBR Fuel Shipment) will continue.

2. RECEIVING AND STORAGE (TASK 2)
(A. R. Irvine and C. D. Watson)

This task is concerned with the means for rapid, effective economical, and safe operation of receiving and storage facilities for LMFBR fuels. The character of the work to be performed under this task will be determined largely by the outcome of investigations performed for the shipping and for the head-end processing tasks. Conversely, these other two tasks will be required to take into consideration the effect of variables in their area on the task of receiving and storage. This work will take cognizance of related work on fuel handling and sodium removal that will be performed under Elements 3 and 5, respectively, of the LMFBR program plan.

No effort was devoted to this task during the report period.

3. HEAD-END PROCESSING OF LMFBR FUELS (TASK 3)
(C. D. Watson)

The objective of this task is to develop economic head-end processing steps, in preparation for Purex recovery methods, for long- and short-decayed fuels.

In general all experimental work is being deferred pending completion of a Head-End Engineering Evaluation Study now being made.

Reportable accomplishments include:

3.1. Decay Heat Dissipation (Task 3.1)
(R. L. Cox)

The computer code HEX was used to generate the data shown in Fig. 3-1 which can be used to determine the center pin temperature as a function of emissivity, heat generation rate, and shroud temperature for the LMFBR fuel arrays shown. The ordinate in Fig. 3-1 is dimensionless so that any set of consistent units can be employed. The definitions of the various quantities in terms of English units are:

Q_A = pin surface heat flux, BTU/(hr-ft^2 of pin)

σ = Stefan-Boltzman constant, 0.1712×10^{-8} BTU/(hr-ft^2-°R^4),

T_c = absolute temperature of center pin, °R,

T_s = absolute temperature of shroud, °R,

PDR = pitch to diameter ratio, and

N_{Rods} = number of rods in array.

The results presented in Fig. 3-1 are based on the assumption of heat transfer by radiation only between rods in the array. This should be a reasonable assumption for fuel assemblies being handled in a gas atmosphere. As would be expected, Fig. 3-1 shows for assemblies having the same number of rods, that the temperature increases as the pins are more closed spaced. The effect of increasing the size of the array can be seen by comparing the AI follow-on assembly with the GE follow-on assemblies. The two assemblies have practically the same pitch to diameter ratio, but the GE assembly has two more rows or rods.

The pin surface heat flux as a function of decay time is given in Fig. 3-2 for the AI reference oxide core (specific power = 148 Mw/metric ton, burnup = 80,000 Mwd/metric ton, FFTF core (specific power = 100 Mw/metric ton, burnup = 45,000 Mwd/metric ton), AI follow-on inner core

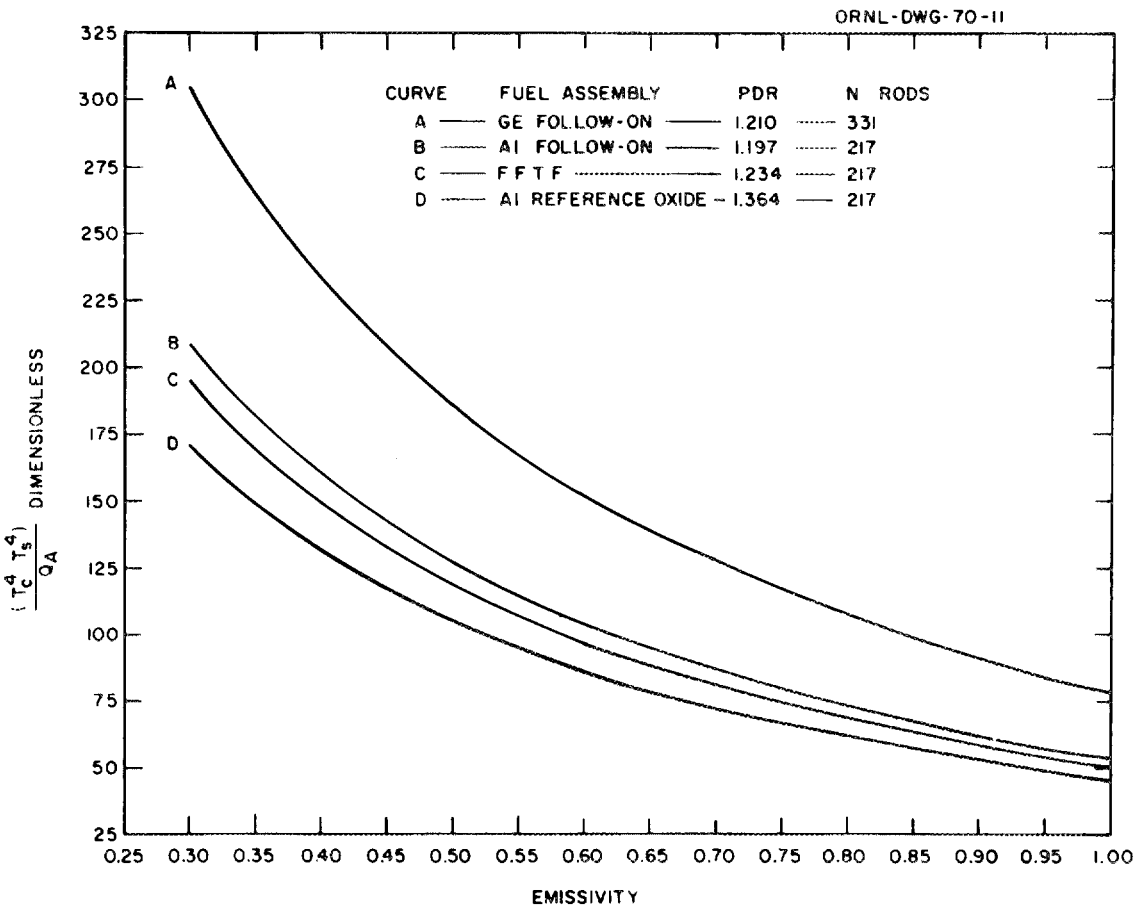

Fig. 3-1 Dimensionless Center Pin Temperature for LMFBR Fuel Assemblies.

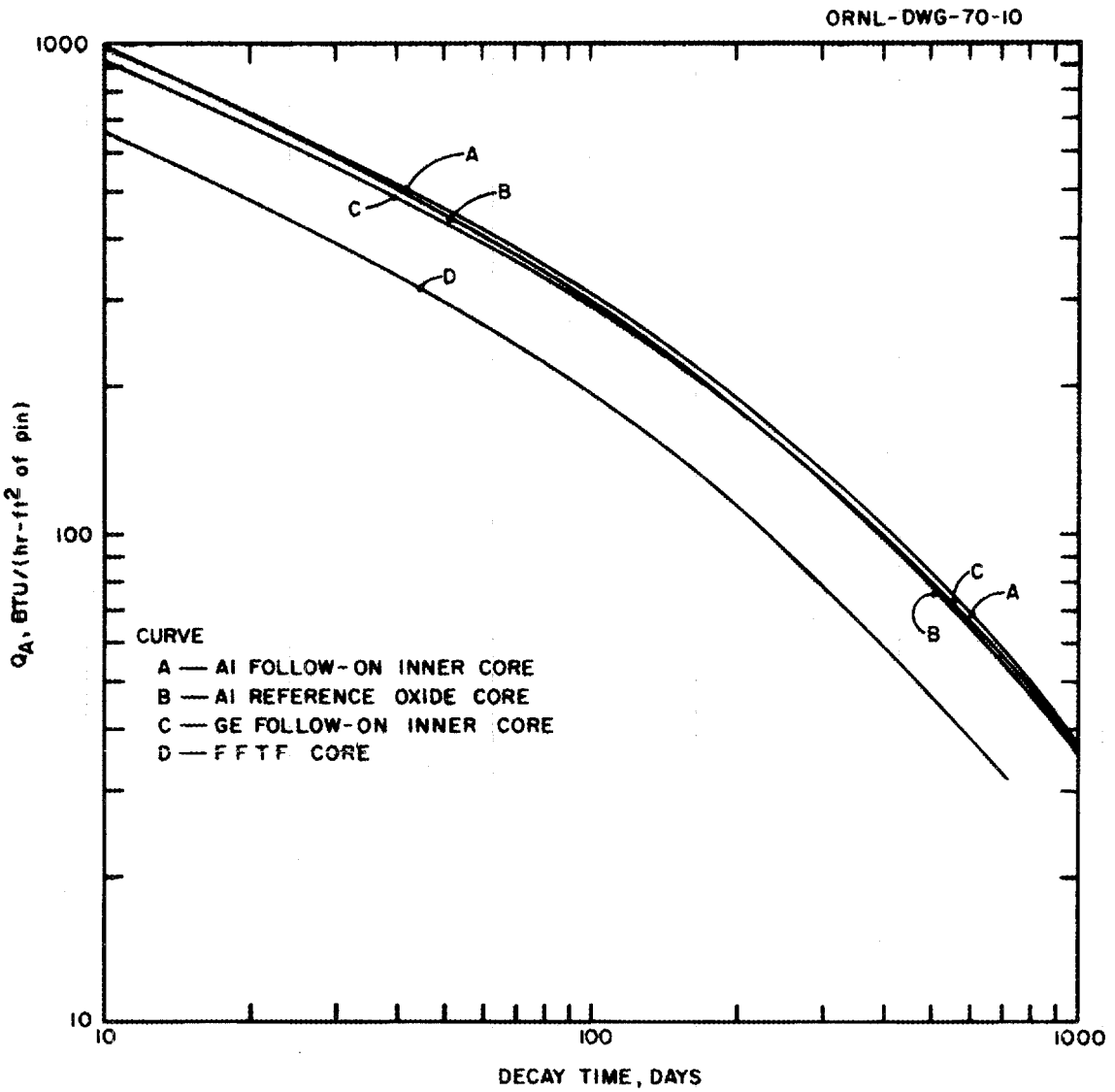

Fig. 3-2 Decay Heat Generation of LMFBR Fuel Pins.

(specific power = 105 Mw/metric ton, burnup = 77,000 Mwd/metric ton), and GE follow-on inner core (specific power = 138 Mw/metric ton, burnup = 101,000 Mwd/metric ton).

3.2. Dismantling of Multitubular Assemblies (Task 3.2)
(G. A. West, R. S. Lowrie)

All experimental work for dismantling LMFBR fuel assemblies has been deferred pending the completion of Head-End Engineering Evaluation Studies.

3.3. Shearing (Task 3.3)
(G. A. West, R. S. Lowrie)

The experimental work for the investigation of the shearing of LMFBR-type fuels has also been deferred pending completion of the Head-End Engineering Evaluation Studies.

3.7. Alternative Head-End Process (Task 3.7)
(S. D. Clinton, A. R. Irvine)

Melt-decladding is being considered as a backup process for the shear-leach head-end. All experimental work has been deferred pending completion of the Head-End Engineering Evaluation Study. Future activities will be limited to following the experimental work conducted by Argonne National Laboratory.

4. VOLATILE FISSION PRODUCT REMOVAL (TASK 4)
(D. J. Crouse, C. D. Watson)

The objective of Task 4 is to develop a head-end processing method for removing iodine, xenon, krypton, and tritium from the fuel prior to aqueous processing. Early removal of these gases from the fuel into a relatively small volume of gas would greatly facilitate off-gas treatment. This is of particular importance with respect to iodine control because of the very high plant retention factors that will be required for ^{131}I when treating short-cooled fuels.

There was no reportable progress on this task this month.

5. DISSOLVING (TASK 5)
(D. J. Crouse, C. D. Watson)

The objective of Task 5 is to ensure that LMFBR fuels can be dissolved in nitric acid with high metal recoveries. Since the dissolution characteristics of the fuels can vary widely depending on their plutonium content, method of preparation, and irradiation histories, extensive leaching data are being obtained to define the effects of the many variables. A thorough understanding of iodine chemistry in the dissolver system is needed as a guide for providing effective iodine control. The dissolver equipment must be designed and operated within rather narrow limitations imposed by criticality control and off-gas considerations. It appears that satisfactory solution of these problems can best be accomplished using a continuous dissolver and this approach is being emphasized. Evolution of a successful dissolver will require development of equipment for dependably moving the sheared stainless steel hulls and other solids through the system, and development of seals for isolating the system to prevent excessive in-leakage of diluent gases.

This month solubilities of tin and tellurium in nitric acid were determined. In a test with irradiated (U, Pu)C, there was no reaction of the metal carbides when contacted with boiling water for 3 hr.

5.1 Dissolution Data (Task 5.1)

<u>Solubilities of Fission Products</u> (W. Davis, Jr., A. H. Kibbey)

As described previously, we have prepared a nitric acid solution containing nearly all of the fission product elements (non-radioactive isotopes) for use in solvent extraction studies. At the same time, useful information is being obtained concerning the solubilities of the various fission product elements in the solvent extraction feed solutions. The concentration of each element is as described previously[1] but assuming

a dissolver product solution containing 500 g (U + Pu)/liter. Of the metal constituents, actinide elements were not included nor were tin, antimony, tellurium, and niobium. The last four elements are being tested for solubility in nitric acid and in the composite solution.

We have now observed that some fission products slowly precipitate from the stock solution described above, which is about 3 molar in nitric acid. A major component of this precipitate is silver, which would be present to the extent of about 0.37 g/kg (U + Pu) in the AI reference oxide composite fuel. For comparison, an advanced PWR running at steady state without plutonium recycle at a power density of 35 Mw/metric ton (U + Pu), and a burnup of 40,000 Mwd/metric ton (U + Pu) in 1143 days is calculated[2] to contain only 0.14 g Ag/kg (U + Pu). We have further estimated that only 0.08 g Ag/kg (U + Pu) will be produced during burnup of the TVA Brown's Ferry reactor fuel to 27,500 Mwd/metric ton (U + Pu). Thus, the quantity of silver formed in the LMFBR will be considerably greater than in light-water reactors. An LMFBR fuel processing plant of 5 ton/day capacity would process nearly 2 kg of silver per day, as well as significant amounts of palladium, and recovery of these elements conceivably could be economically feasible.

The chemical form of the silver precipitate is not yet known. It does contain zirconium, ruthenium, and palladium, but these do not appear to be part of the major anionic species. The mass of the precipitate is equivalent to 1.3% of the total contained fission product mass.

The solid acidic oxides of tin, tellurium, and antimony were prepared by dissolving the pure metals in reagent nitric acid solutions. Each of the precipitated metal oxides was recovered by filtration, water washed, air-dried at room temperature, and the oxides of tin and tellurium subsequently were used to determine solubilities in 1, 3, and 5 M HNO_3. At all three acid concentrations, the solubility of tin was less than 1 mg/ml, but tellurium solubilities showed an unexplained anomally: 0.13, 0.59, and 0.037 mg/ml in 1, 3, and 5 M HNO_3, respectively. We are now rechecking these measurements.

Hydrolysis of Irradiated 20% PuC--80% UC (J. H. Goode, V. C. A. Vaughen)

We previously described[3] an experiment in which we contacted unclad fragmented pieces of 20% PuC--80% UC, that had been irradiated to about 26,000 Mwd/ton, with demineralized water for 20 hr at room temperature and 4 hr at 85°C. No evolution of gas was detected, indicating that there was no reaction of the metal carbides with the water. We since have obtained analyses of the leach water and found that it contained no heavy metals but about 1% of the gross gamma emitters (essentially all ^{137}Cs).

In a continuation of this test, the (U, Pu)C pieces were boiled in fresh water for 3 hr. Again, there was no gas evolution nor dissolution of uranium or plutonium; however, an additional 2.5% of the ^{137}Cs was leached.

References

1. W. E. Unger, et al., LMFBR Fuel Cycle Studies Progress Report for September 1969, No. 6, ORNL-TM-2710.

2. W. Davis, Jr., and H. F. Soard, A Computer Program for Handling and Comparing Fission Product Data from RIBDOR for Mixtures of Reactor Fuels Irradiated Under Different Conditions: Application to Atomics International LMFBR Fuel, ORNL-TM-2393 (November 1968), Table 13.

3. W. E. Unger, et al., Aqueous Processing of LMFBR Fuels Progress Report June 1969, No. 4, ORNL-TM-2650.

6. FEED PREPARATION (TASK 6)
(D. J. Crouse)

The aqueous feed discharged from the dissolver will contain solids (undissolved fission products, corrosion products, etc.) and will probably require clarification prior to solvent extraction. Preparation of the feed for solvent extraction also will include adjustment of the plutonium valence and the nitric acid concentration, and a treatment to remove iodine. This task also covers feed preparation for subsequent process cycles.

This month studies of iodine removal from nitric acid solutions by gas sparging continued to show a decrease in the iodine volatilization rate at low iodine concentrations. A relatively large amount of black solids (primarily stainless steel components, silica, and noble metal fission products) precipitated from a solvent extraction feed solution that had been prepared from irradiated LMFBR fuel specimens and had stood for 2 months.

6.2 Iodine Control (Task 6.2)
(G. I. Cathers, C. J. Shipman)

Studies were continued of variables affecting the release of iodine from nitric acid solutions by sparging. Efficient removal of iodine from the dissolver solution prior to solvent extraction should lead to less iodine contamination of the organic extraction system and allow more efficient retention of iodine in the processing plant.

The standard transpiration technique now being employed consists of sparging 250 ml of nitric acid solution, containing ^{131}I tracer and carrier iodine, with a mixture of 22 ml/min N_2O_3 and 45 ml/min N_2. The decrease of iodine concentration in the solution with time is followed by determining the activity of the sparged solution. It was found that impurities in the nitric acid affect the results,[1] and, therefore, only

distilled nitric acid has been used recently in preparing the nitric acid solutions for test. This has seemed to improve the quality and reproducibility of the data, but we have not yet identified the offending impurity that is removed by the distillation step. The possibility that sorption of molecular I_2 on hydrated silica could lead to anomalous results was considered but rejected after one test in which 0.05 M Na_2SiO_3 was added to the solution. Despite the formation of a copious quantity of silica gel in the 4 M HNO_3 solution, no effect on the I_2 volatilization rate was discerned.

We have recently considered the hydrolysis reaction

$$I_2 + H_2O \rightleftharpoons HOI + H^+ + I^-$$

that could invalidate Henry's Law ($p \sim c$) at low iodine concentrations and thus lead to a non-linear logarithmic relationship between iodine concentration and sparging time. An analogous case has been observed in the behavior of Cl_2 as evidenced by its distribution between aqueous and organic solutions.[2] If this is substantiated, then the intermittent addition of iodine might be a necessary requisite to obtaining a low level of ^{131}I activity in process fuel solutions. Such additions would be utilizing the principle of isotopic dilution as well as keeping the I_2 concentration in a range where the volatility would be first-order, rather than a lower order, with respect to the I_2 concentration.

6.3 Feed Clarification (Task 6.3)
(J. H. Goode, V. C. A. Vaughen)

When additional plutonium analyses were requested on a sample of the solvent extraction feed solution that had stood about 2 months after use in cyclic solvent damage studies,[3] we found that a relatively large amount of black solids had precipitated. After centrifuging the solution and washing the solids, both the supernatant solution and solids were analyzed by emission spectroscopy. A qualitative analysis of the solids and a rough estimate of the concentrations of the various constituents in the supernatant solution are shown in Table 6-1. The precipitated material appears to be a mixture of stainless steel components, silica, and noble metal fission products. The instability of the 3 M HNO_3--95 g U/liter--20 g Pu/liter feed solution had been indicated earlier during radiochemical analysis by the gradual disappearance of $^{103-106}Ru$ and ^{95}Zr-Nb from solution upon standing. The concentrations of the stainless steel components and fission products in the supernatant solution were large enough to interfere with the analysis of plutonium by the usual coulometric titration procedure in a sulfuric acid medium.

Table 6-1. Analysis of Precipitate from Solvent Extraction Feed Solution

Element	Precipitated Solids	Supernatant Solution (g/liter)
Al	W	0.05
Ca	VW	0.1 - 0.5
Ce	W	0.2
Co	VW	Present
Cr	T	0.02
Cu	T	0.05
Fe	S-VS	0.5
La	VFT	0.05
Mn	VW	-
Mo	W	0.05
Na	T	0.5 - 2.0
Ni	M	0.2
Pb	W	0.04
Pd	M-S	0.1
Rh	W-M	-
Ru	Present	-
Si	S-VS	-
Sn	W	0.2
Zr	VW	0.02

VS = very strong, S = strong, M = moderate, W = weak, VW = very weak, T = trace, VFT = very faint trace, - = sought, not found.

References

1. W. E. Unger, et al., LMFBR Fuel Cycle Studies Progress Report for November, No. 9, ORNL-TM-2795.

2. A. C. Wahl and N. A. Bonner, Radioactivity Applied to Chemistry, p. 149.

3. W. E. Unger, et al., LMFBR Fuel Cycle Studies Progress Report for October, No. 8, ORNL-TM-2764.

7. SOLVENT EXTRACTION (TASK 7)
(D. J. Crouse, C. D. Watson)

The objective of Task 7 is to establish that LMFBR fuels can be processed successfully by solvent extraction methods. Initial emphasis is on development of solvent extraction flowsheets suitable for interim processing of LMFBR fuels in existing plants. Present Purex flowsheets are being modified where necessary to provide for the high plutonium content of these fuels. The wide solvent extraction experience accumulated at production sites is being assessed and factored into these studies. Particular emphasis is being given to experimental evaluation of iodine behavior in solvent extraction and to the effect of solvent damage on process performance, especially when processing short-cooled fuels. Different solvent extraction contactors are being evaluated with respect to their relative merits for processing LMFBR fuels.

This month the SEPHIS computer code for predicting the distribution of plutonium and uranium in the Purex system was refined and the code was used to help formulate solvent extraction flowsheets for FTR fuels. Solvent degradation studies showed that exposure of the solvent to light in the presence of uranium and nitric acid leads to considerable retention of uranium by the solvent. A literature survey was made to accumulate all useful data relating to the variation of the TBP vapor pressure with temperature.

7.1 Flowsheet Development (Task 7.1)

Computer Simulation of the TBP Extraction System (W. S. Groenier)

The computer code (SEPHIS) was written to predict plutonium and uranium distributions in the Purex system. A preliminary description of the code was given previously.[1] Compared to other existing methods for solvent extraction analysis, this code differs in the manner in which distribution coefficients (equilibrium ratio of solute in organic phase to solute in aqueous phase) are chosen. For each stage of the particular solvent extraction contactor under study, and for each time element of the transient (approach to steady-state operation), distribution coefficients are calculated from a correlation that relates to the total ionic strength of the system. This correlation has been reported and discussed in detail.[2]

Briefly, the correlation for any one solute may be represented by the following equations:

$$D_n = f_1 \ (K_1, K_2, K_3, x_1, \ldots . x_m) \quad ,$$

where D_n is the distribution coefficient for solute n, the K values are pseudo-equilibrium constants for the TBP complex formation reactions

(include imbedded activity coefficients) and the x values are aqueous phase compositions of each ionic species. Then each

$$K = f_2 \left(a + bz + cz^2 + dz^3\right) ,$$

where z is the total ionic strength of the system and a, b, c, and d are empirical coefficients. These coefficients have been evaluated using the recent plutonium(IV) extraction data reported by J. G. Moore.[3]

The SEPHIS code was recently revised to embody several new innovations and a totally new set of empirical coefficients. Most changes since the time of the previous report on this subject are concerned with obtaining the desired form of printed computer output. One important change has been to include the possibility of correcting predicted distribution coefficients to provide for a change in temperature from the temperature that applied to the empirical coefficients. The new coefficient values were required because of errors in the old set and because all experimental data from Reference 3 were not utilized previously.

The revised computer code has been used to predict the steady-state concentration profiles for the processing conditions used in two recent batch countercurrent tests. Agreements between predicted and experimental data were satisfactory for the first-cycle co-extraction of uranium and plutonium (Table 7-1) and for plutonium extraction in the second cycle (Table 7-2), although the agreement was not quite as good in the dilute region as it was in the data reported previously.[1]

The revised code has also been used as an aid in formulating flowsheets for processing FTR fuel (Figs. 7-1, 7-2, and 7-3) and for predicting the steady-state concentration profiles in each stage. The predicted profiles for co-extraction of uranium and plutonium in the first cycle and for extraction of plutonium in the second and third cycles are presented in Tables 7-3, 7-4, and 7-5. The profiles for stripping uranium in the first cycle and plutonium in the third cycle are shown in Tables 7-6 and 7-7.

In stripping plutonium in the third cycle (Table 7-7), the aqueous phase plutonium concentration exceeds 40 g/liter in some stages. This condition favors the formation of plutonium polymer at low aqueous acidities (< 0.2 M HNO_3). For this reason we are specifying the use of 0.3 M acid for stripping rather than 0.15 M acid that was used in earlier studies.[4] Confirmation is needed that a third phase will not form at the concentrated end of the plutonium stripping flowsheet. Third phase formation is avoided in the second and third plutonium extraction cycles (Tables 7-4 and 7-5) by operating at 40°C.

These flowsheet conditions represent only our latest predicted values using the computer, and are not fully verified by experimental data. Calculated losses are probably low as no retention of solute

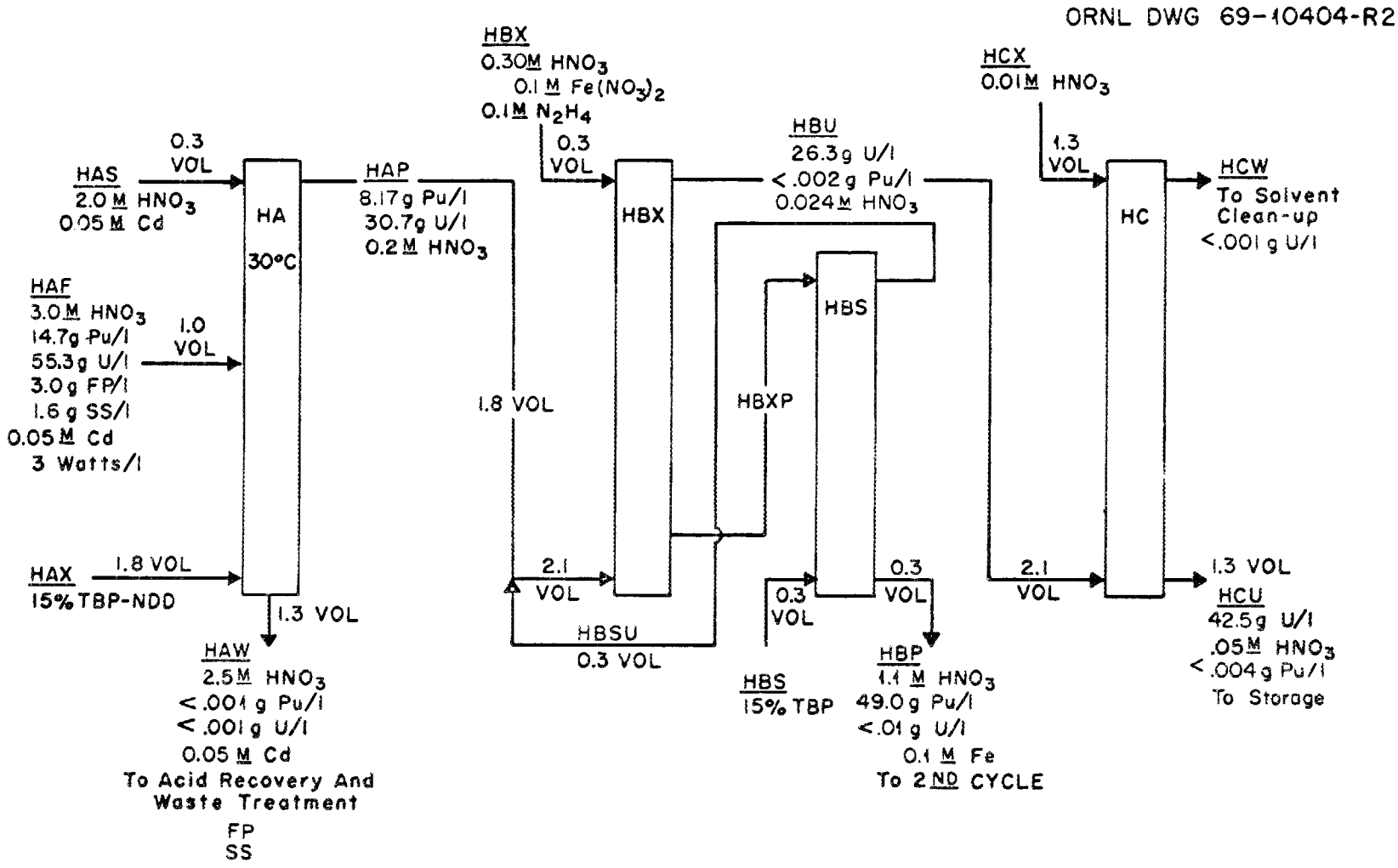

Fig. 7-1 First-Cycle Solvent Extraction Flowsheet for FTR Fuel.

ORNL DWG 69-10405-R2

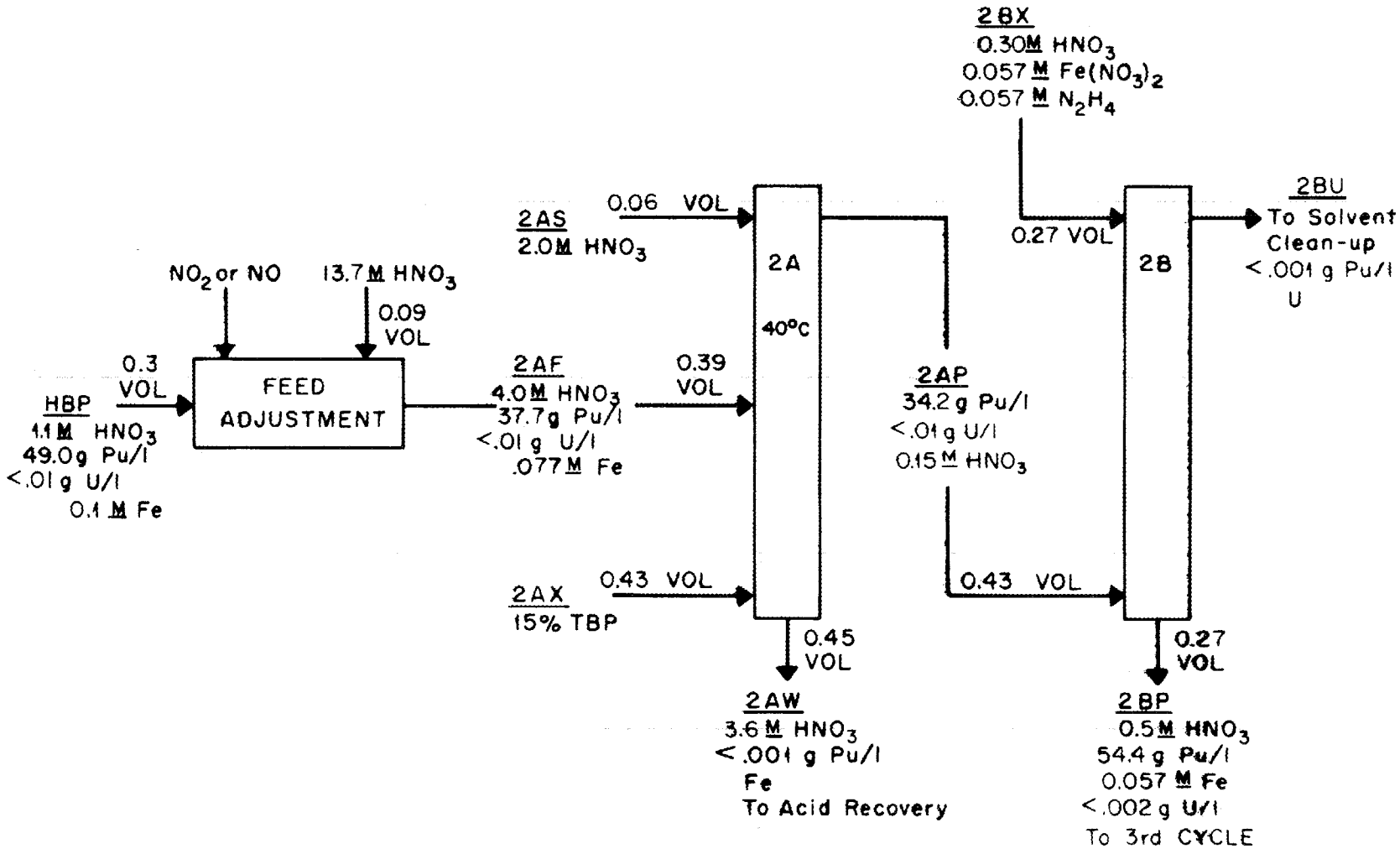

Fig. 7-2 Second-Cycle Solvent Extraction Flowsheet for FTR Fuel.

ORNL DWG 69-10406-R2

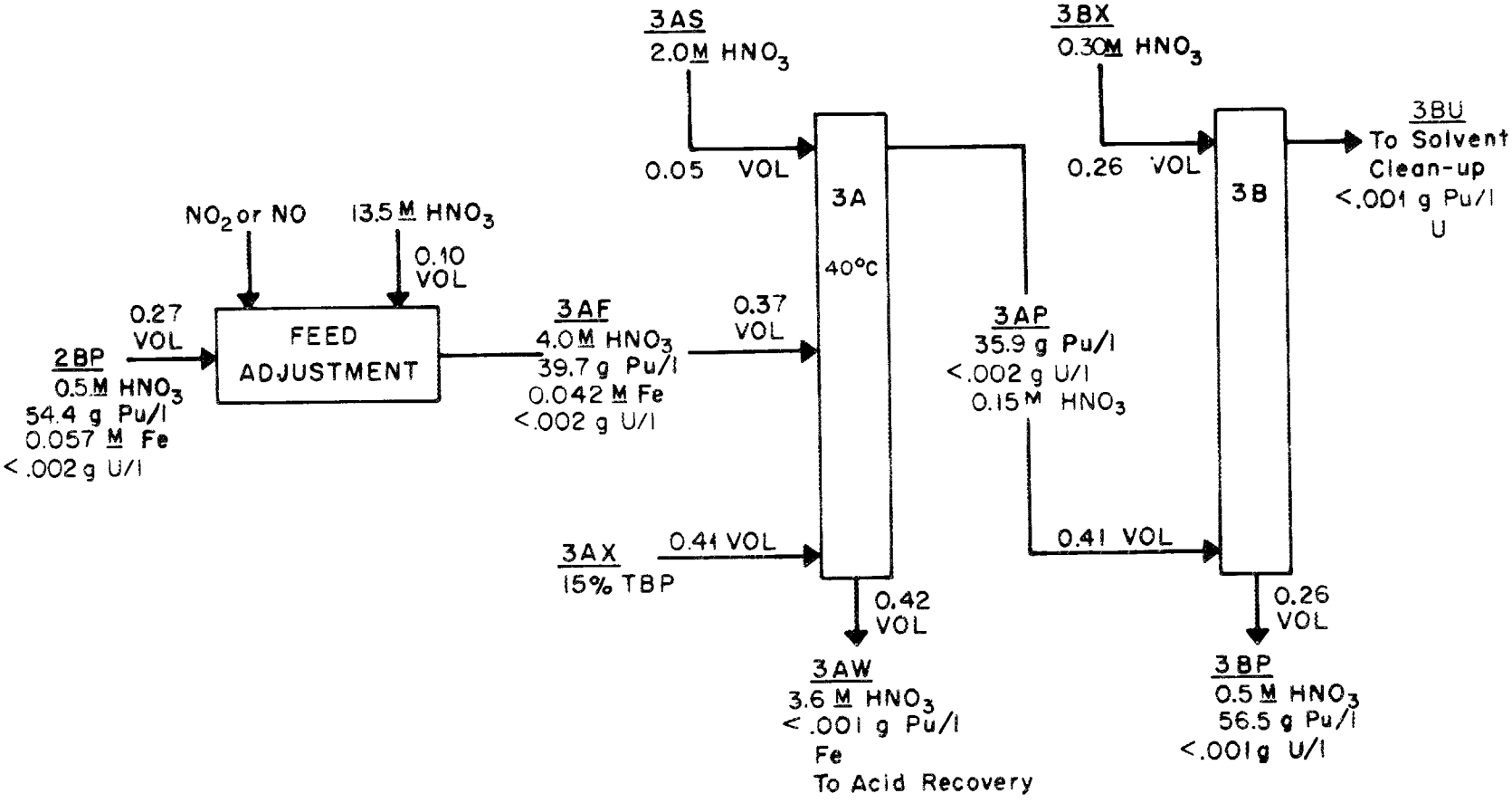

Fig. 7-3 Third-Cycle Solvent Extraction Flowsheet for FTR Fuel.

Table 7-1. Comparison of Experimental and Predicted Data for First-Cycle Co-Extraction of Uranium and Plutonium

Aqueous Feed: 3.2 M HNO_3, 67.7 g of U and 4.43 g of Pu(IV) per liter
Organic: 15.3% TBP--84.7% n-dodecane
Scrub Solution: 2 M HNO_3
Relative Volumes, Feed/Organic/Scrub: 1.0/1.8/0.3

	Organic Phase						Aqueous Phase					
	U (g/liter)		Pu (g/liter)		HNO_3 (M)		U (g/liter)		Pu (g/liter)		HNO_3 (M)	
Stage	A	B	A	B	A	B	A	B	A	B	A	B
Scrub -3	38.8	37.6	2.53	2.45	0.21	0.12	18.5	21.0	4.1	5.2	2.07	1.86
-2	42.1	41.1	2.91	3.31	0.21	0.10	23.0	28.3	5.8	9.1	2.10	1.82
-1	43.6	42.3	3.05	3.96	0.24	0.09	18.5	30.6	4.2	11.1	2.90	1.96
Feed	-		-		-		67.7		4.43		3.20	
Extraction -1	43.7	42.7	3.21	4.31	0.26	0.12	18.2	24.4	3.75	7.17	3.00	3.13
-2	13.9	17.6	2.65	5.16	0.29	0.28	2.72	2.53	0.91	1.88	2.90	3.33
-3	1.28	1.83	0.50	1.36	0.34	0.41	0.11	0.125	0.092	0.223	3.10	3.36
-4	0.07	0.090	0.074	0.161	0.34	0.44	<0.01	0.006	0.015	0.024	3.10	3.36
-5	<0.02	0.004	0.009	0.017	0.34	0.44	<0.01	<0.001	0.003	0.003	3.10	3.36
-6	<0.02	<0.001	0.002	0.002	0.35	0.44	<0.01	<0.001	0.001	<0.001	3.07	3.36
-7	<0.02	<0.001	<0.001	<0.001	0.34	0.44	<0.01	<0.001	0.001	<0.001	3.01	3.31
-8	<0.02	<0.001	0.004	<0.001	0.30	0.40	<0.01	<0.001	0.010	<0.001	2.64	2.75

A = Experimental value
B = Predicted value

Table 7-2. Comparison of Experimental and Predicted Data for Second-Cycle Extraction of Plutonium

Aqueous Feed: 4.1 M HNO_3, 19.2 g of Pu(IV) per liter
Organic: 15.0% TBP--85.0% n-dodecane
Scrub Solution: 2 M HNO_3
Relative Volumes, Feed/Organic/Scrub: 1.0/0.9/0.11

	Organic Phase				Aqueous Phase			
	Pu (g/liter)		HNO_3 (M)		Pu (g/liter)		HNO_3 (M)	
Stage	A	B	A	B	A	B	A	B
Scrub -3	20.7	21.3	0.24	0.20	14.1	12.9	2.2	2.0
-2	20.9	22.9	0.24	0.21	13.9	12.7	2.5	2.2
-1	19.9	22.9	0.22	0.23	11.4	10.1	2.8	2.6
Feed	-		-		19.2		4.1	
Extraction -1	22.0	22.6	0.35	0.28	6.60	6.34	3.9	4.0
-2	7.2	7.82	0.33	0.39	1.52	1.26	3.9	4.1
-3	1.8	1.55	0.34	0.45	0.307	0.204	4.0	4.1
-4	0.351	0.252	0.36	0.46	0.080	0.032	4.0	4.1
-5	0.075	0.039	0.36	0.46	0.034	0.005	4.0	4.1
-6	0.015	0.006	0.38	0.46	0.044	<0.001	4.0	4.1
-7	0.005	<0.001	0.37	0.45	0.029	<0.001	3.9	3.7

A = Experimental value
B = Predicted value

Table 7-3. Predicted Data for First-Cycle FFTF Co-Extraction of Uranium and Plutonium[a]

Aqueous Feed: 3 M HNO_3, 55.3 g of U and 14.7 g of Pu(IV) per liter
Organic: 15% TBP--85% n-dodecane
Scrub Solution: 2 M HNO_3
Relative Volumes, Feed/Organic/Scrub: 1.0/1.8/0.3

	Organic Phase			Aqueous Phase		
Stage	U (g/liter)	Pu (g/liter)	HNO_3 (M)	U (g/liter)	Pu (g/liter)	HNO_3 (M)
Scrub -3	30.7	8.09	0.11	15.3	16.2	1.83
-2	33.3	10.8	0.08	19.1	27.4	1.79
-1	33.9	12.7	0.07	20.2	33.1	1.90
Feed	-	-	-	55.3	14.7	3.0
Extraction -1	34.1	13.6	0.09	19.2	25.0	2.88
-2	13.8	18.0	0.19	3.26	11.2	3.09
-3	2.36	8.08	0.34	0.233	1.88	3.18
-4	0.168	1.35	0.41	0.012	0.233	3.20
-5	0.009	0.168	0.42	<0.001	0.028	3.20
-6	<0.001	0.020	0.42	<0.001	0.003	3.20
-7	<0.001	0.002	0.42	<0.001	<0.001	3.15
-8	<0.001	<0.001	0.39	<0.001	<0.001	2.62

[a]Operation at 30°C.

Table 7-4. Predicted Data for Second-Cycle Extraction of Plutonium (FTR Fuel)

Aqueous Feed: 4 M HNO_3, 37.7 g of Pu(IV) and < 0.02 g of U/liter
Organic: 15% TBP--85% n-dodecane
Scrub Solution: 2 M HNO_3
Relative Volumes, Feed/Organic/Scrub: 0.39/0.43/0.06
Temperature: 40°C

Stage	Organic Phase Pu (g/liter)	Organic Phase HNO_3 (M)	Aqueous Phase Pu (g/liter)	Aqueous Phase HNO_3 (M)
Scrub -3	34.1[a]	0.15	24.1	1.93
-2	37.5	0.14	27.4	2.01
-1	38.0	0.15	24.8	2.30
Feed	-	-	37.3	4.00
Extraction -1	37.6	0.19	17.1	3.90
-2	17.8	0.32	3.55	4.00
-3	3.70	0.43	0.475	4.02
-4	0.497	0.45	0.058	4.03
-5	0.061	0.46	0.007	4.03
-6	0.007	0.46	< 0.001	4.01
-7	< 0.001	0.44	< 0.001	3.59

[a] < 0.02 g U/liter.

Table 7-5. Predicted Data for Third-Cycle Extraction of Plutonium (FTR Fuel)

Aqueous Feed: 4 M HNO_3, 39.7 g of Pu(IV) per liter, < 0.002 g of U/liter
Organic: 15% TBP--85% n-dodecane
Scrub Solution: 2 M HNO_3
Relative Volumes, Feed/Organic/Scrub: 0.37/0.41/0.05
Temperature: 40°C

Stage	Organic Phase Pu (g/liter)	Organic Phase HNO_3 (M)	Aqueous Phase Pu (g/liter)	Aqueous Phase HNO_3 (M)
Scrub -3	35.8[a]	0.15	26.1	1.93
-2	39.0	0.14	29.2	2.02
-1	39.4	0.15	26.4	2.33
Feed	-	-	39.7	4.00
Extraction -1	39.0	0.18	19.0	3.92
-2	19.5	0.31	4.08	4.03
-3	4.17	0.42	0.537	4.06
-4	0.550	0.45	0.064	4.07
-5	0.065	0.46	0.008	4.07
-6	0.008	0.46	< 0.001	4.05
-7	< 0.001	0.44	< 0.001	3.62

[a] < 0.002 g of U/liter.

Table 7-6. Predicted Data for First-Cycle Stripping of Uranium (FTR Fuel)

Strip Solution: 0.01 M HNO_3
Organic Feed: 26.3 g of U and < 0.002 g of Pu per liter, 0.024 M HNO_3
Relative Volumes (Organic Feed/Strip Solution): 2.1/1.3
Temperature: 30°C

	Organic Phase		Aqueous Phase	
Stage	U (g/liter)	HNO_3 (M)	U (g/liter)	HNO_3 (M)
Strip -1	< 0.001[a]	< 0.001	< 0.001	0.010
-2	< 0.001	< 0.001	0.035	0.010
-3	0.021	< 0.001	2.73	0.011
-4	1.69	< 0.001	14.3	0.011
-5	8.86	< 0.001	27.2	0.012
-6	16.9	0.001	37.1	0.016
-7	22.9	0.003	42.5[b]	0.049

[a] < 0.001 g Pu/liter.

[b] 0.003 g Pu/liter.

Table 7-7. Predicted Data for Third-Cycle Stripping of Plutonium (FTR Fuel)

Strip Solution: 0.30 M HNO_3
Organic Feed: 35.9 g of Pu(IV) per liter, 0.15 M HNO_3, < 0.002 g of U/liter, 15% TBP--85% n-dodecane
Relative Volumes, Organic Feed/Strip Solution: 0.41/0.26
Temperature: 25-30°C

Stage	Organic Phase Pu (g/liter)	Organic Phase HNO_3 (M)	Aqueous Phase Pu (g/liter)	Aqueous Phase HNO_3 (M)
Strip -1	< 0.001[a]	0.025	< 0.001	0.30
-2	< 0.001	0.027	0.036	0.31
-3	0.023	0.032	1.93	0.33
-4	1.23	0.043	16.3	0.33
-5	10.3	0.041	36.2	0.32
-6	23.0	0.035	50.9	0.33
-7	32.3	0.043	56.6[b]	0.50

[a] < 0.002 g U/liter.
[b] < 10^{-4} g U/liter.

by possible solvent degradation products was considered and all of the plutonium was assumed to be in the quadrivalent state, whereas a small fraction might be present as Pu(VI). Finally, the use of the code in analyzing stripping operations (low ionic strength) must be verified experimentally.

Continued applications of the SEPHIS code will be made in the forthcoming months for AI reference and follow-on fuel types and for the GE follow-on fuel.

7.2 Solvent Stability (Task 7.2)

Effect of Light on the Retention of Uranium by TBP (J. G. Moore)

In a recent hot cell cyclic solvent extraction experiment, losses of plutonium and uranium to the stripped solvent increased from a negligible value (< 0.02%) in the first cycle to 0.43% and 0.35%, respectively, in the fourth cycle.[4] This did not appear to be a radiation damage effect since it had not been observed in other tests of this type at approximately similar radiation exposure levels. In this particular experiment, the solvent, after stripping with dilute nitric acid and washing with sodium carbonate solution in each cycle, was contacted with 3 M HNO_3 and allowed to stand overnight prior to the next extraction cycle. We considered the possibility that the observed damage may have been caused by nitric acid (or nitrous acid) attack, possibly accelerated by exposure to light. Some preliminary laboratory tests indicate that this may well have been the cause of the metal retention.

In one test series, 15% TBP--85% n-dodecane was loaded with uranium by contact with 3 M HNO_3--0.4 M $UO_2(NO_3)_2$ solution for 40 min and was then scrubbed by several contacts with 2 M HNO_3--0.1 M $UO_2(NO_3)_2$ solution. An aliquot of the scrubbed extract was immediately stripped by contacting it with seven consecutive 0.5 volumes of 0.1 M HNO_3. The remainder of the organic extract was divided into two parts; one part was placed in the dark and the other was placed in a graduate situated 15 cm from a 15-watt fluorescent light. Aliquots of each were taken after 1, 2, and 3 days and stripped with 0.1 M HNO_3. The amount of uranium retained by the "dark" sample (0.04%) did not change with time and was the same as for the sample that was stripped immediately. However, the amount retained by the "light" sample was 0.10, 0.20, and 0.36% after 1, 2, and 3 days, respectively.

In another experiment the TBP-n-dodecane was contacted with 3 M HNO_3 and the organic phase, after separation from the aqueous, was placed before the fluorescent light for 18 hr. An extraction-scrub cycle followed by an immediate stripping cycle using this organic solution resulted in only 0.04% of the uranium being retained by the organic phase. The failure to demonstrate metal retention in this test

indicates that the presence of uranium during exposure of the solvent to light may be an important factor.

Although not of importance with respect to plant operation, effects observed above could be highly important with respect to laboratory and hot cell experiments. Additional studies of this type are being made to define the magnitude of the degradation under a variety of conditions.

Vapor Pressure of Tri-n-butyl Phosphate (W. Davis, Jr., A. H. Kibbey)

Knowledge of the variation of the vapor pressure of TBP with temperature is necessary for (1) design of a flash or steam distillation process for purification of degraded TBP, and (2) refining the computer simulation of the solvent extraction process. There are many references to this vapor pressure, including 19 listed by Leroy.[5] Many of the quoted values are simply derived from the equation of Evans, Davies, and Jones;[6] but other values are of unknown origin. For this reason we performed a literature survey to determine which vapor pressures were measured and which were calculated. Using vapor pressure measurements from only 10 references in which we were able to find original experimental data, we determined the coefficients of the Antoine vapor pressure equation,

$$\ln P = A = \frac{B}{C + t}, \qquad (1)$$

where A, B, and C are constants, P is the vapor pressure and t is the temperature, in °C. Based on the assumption that all data have the same percentage uncertainty, and with P in units of mm Hg, the constants, and their standard deviations, are as follows:

$$A = 18.893 \pm 0.635$$

$$B = -6766.89 \pm 475.67$$

$$C = 259.33 \pm 17.84^{\circ}C$$

Standard deviation of fit = 19.35% of experimental pressure

Calculated heat of vaporization at 25°C = -14785 cal/mole

Calculated vapor pressure at 25°C = 7.4 microns

Considering the importance of TBP in the nuclear fuel processing industry, its vapor pressure and heat of vaporization are known to a rather poor level of accuracy.

References

1. W. E. Unger, et al., Aqueous Reprocessing of LMFBR Fuels, Progress Report, June 1969, No. 4, ORNL-TM-2650.

2. D. E. Horner, A Mathematical Model and Computer Program for Estimating Distribution Coefficients for Plutonium, Uranium, and Nitric Acid Extractions by Tri-n-Butyl Phosphate, ORNL-TM-2711 (in preparation).

3. J. G. Moore, The Extraction of Plutonium(VI) from Nitric Acid--Uranyl Nitrate Solutions with Tri-n-Butyl Phosphate, ORNL-4348 (January 1969).

4. W. E. Unger, et al., LMFBR Fuel Cycle Studies Progress Report for October, No. 8, ORNL-TM-2764.

5. P. Leroy, "Etude du Solvant Phosphate Tributylique 30%-Dodecane," CEA-R 3207 (March 1967).

6. D. P. Evans, W. C. Davies, and W. J. Jones, "The Lower Trialkyl Orthophosphates. Part I," J. Chem. Soc., 1310 (1930).

8. PLUTONIUM PURIFICATION (TASK 8)
(D. J. Crouse)

This task covers the process steps in purifying plutonium, starting with the plutonium product solution from the first Purex cycle and continuing through preparation of a product solution of adequate purity and concentration for delivery to the fuel refabrication operation.

Plutonium chemistry is reasonably well-known although the high plutonium content of LMFBR fuels makes some process revisions desirable. The large amounts of plutonium to be handled provide strong incentive for improving the efficiency of the plutonium purification processes since the cost of these operations will represent a much larger fraction of the total reprocessing costs than previously. In particular there appears to be a need for a higher capacity process than ion exchange for final decontamination of the plutonium.

This month progress was made in defining the flowsheets for the second and third plutonium purification cycles for FTR fuel. This information is included in Sect. 7.1 with the flowsheet information for the first cycle.

9. WASTE TREATMENT AND STORAGE (TASK 9)

Progress on this task is reported separately.

10. OFF-GAS TREATMENT (TASK 10)
(D. J. Crouse, C. D. Watson)

Retention of iodine is the major problem in treating the off-gas from processing of short-cooled LMFBR fuels since plant retention factors of 10^7 to 10^8 would be required. Retention of most of the xenon and krypton, and eventually tritium, also may be required for future large processing plants. Logic diagrams illustrating alternative processing methods, based on present knowledge, for removing the gases from off-gas streams were presented previously.[1] All promising methods will be evaluated and additional chemical and engineering data developed where necessary. Studies are active in the areas of (1) scrubbing iodine species from gas streams with mercuric nitrate--nitric acid and alkaline solutions, (2) decomposition of organic solvent vapors and organic iodides by catalytic oxidation, and (3) testing of solid iodine adsorbents.

This month several solid sorption agents were tested for removing butyl iodide from air streams with favorable results. In studies of catalytic oxidation of organic vapors, it was shown that Hopcalite is much more effective than cupric oxide as a catalyst. However, the Hopcalite was poisoned by passing an organic phosphate through the catalyst bed. Additional runs were made demonstrating efficient removal of iodine, in the form of methyliodide or butyl iodide, from air streams.

10.1 Iodine (Task 10.1)

Trapping of Volatile Radioiodine by Solid Sorbents (R. E. Adams, R. D. Ackley, Zell Combs)

The trapping of iodine in the form of butyl iodide (1-iodobutane) is under investigation. Data were obtained using ^{131}I-labeled butyl iodide for the following sorbents at the indicated temperatures: silver zeolite ($AgNO_3$-treated Linde Molecular Sieves Type 13X), 1/16-in. pellets, 100°C; Type 13X sieves (untreated), 1/16-in. pellets, 100°C; GX100 (silver-containing alumina from North American Carbon), 8 x 14 mesh, U. S., 100°C; and MSA 85851 iodized charcoal (from Mine Safety Appliances), 8-14 Tyler, 26-27°C. Of these sorbers, the silver zeolite was most efficient.

In these tests, air containing ^{131}I-labeled butyl iodide at a concentration of 41 ppm by volume was passed through a 2-in.-deep bed of the sorbent for varying periods of time (4 hr or more). The face velocities employed were 40 fpm at 26-27°C and 50 fpm at 100°C. The air also contained 2.9% moisture, by volume, and the sorbents with the exception of the untreated zeolite were preequilibrated at the test temperatures by having the air (with 2.9% H_2O vapor) flow through the test beds at the velocities mentioned for about 20 hr prior to introducing the butyl iodide. In addition, the air flow was, in each case,

continued for 1 hr after stopping the addition of butyl iodide.

The results of the tests, performed under conditions in which the amounts of butyl iodide were relatively large compared to the amounts of sorbent, are presented in Table 10-1. The silver zeolite was observed highly effective at 100°C up to a butyl iodide injection level of 87 mg/cm^3 of sorbent. Untreated zeolite was ineffective at 100°C. The GX100 sorbent is fairly effective at 100°C if the amount of butyl iodide introduced is not too large. Also, at 26-27°C, the MSA 85851 type of iodized charcoal exhibits good trapping capability up to 35 mg butyl iodide per cm^3 sorbent under the conditions that existed, although the permanency of the iodine retention by the charcoal remains to be determined. (This aspect is probably not an important factor with respect to the silver-containing sorbents at 100°C.) Similar tests with butyl iodide on silver zeolite and GX100 at 200°C are currently in progress along with tests at 28°C on another type of iodized charcoal.

Catalytic Oxidation of Organic Vapors (G. I. Cathers, M. R. Bennett)

The removal of organic material from process off-gas is desirable as a means of minimizing the formation of organic iodides and the attendant danger of inadequate control of the release of radioiodine to the atmospheric environment. Oxidation of organic vapors in the presence of catalyst is the method being emphasized at present to effect this removal.

Catalytic oxidation studies were initiated with butane-air mixtures in larger-scale equipment than was used in past work. The interrelationship of temperature and butane concentration with degree of oxidation was investigated as was the relative effectiveness of Hopcalite and cupric oxide (wire form) as catalyst material. Using a Beckman continuous hydrocarbon analyzer, it was possible to follow the course of oxidation in each test as the catalyst bed temperature was increased stepwise. In tests with Hopcalite catalyst, the air contained butane at concentrations of 256 or 137 ppm. Essentially 100% oxidation was achieved at 150°C for the lower butane concentration, and at 225°C for the higher concentration. With cupric oxide catalyst and butane concentration of 256 ppm in air, less than 10% oxidation was achieved at 225°C. Further increase in the temperature to 400°C increased the amount of oxidation to about 40%, which indicates some degree of catalytic effect; however, this catalyst is definitely inferior to Hopcalite.

One of the main areas of concern in the use of Hopcalite as catalyst material is the possibility of catalyst poisoning. Poisoning due to the presence of organic phosphates (from use of a tributyl phosphate extraction process) appeared to be a possibility, and is, therefore, being evaluated. In a preliminary scouting test, air containing about 1000 ppm of trimethyl phosphate was passed through 10 ml of Hopcalite at 350°C for 122 hr. At the end of this time a black residue (assumed to be decomposition products of the TMP) had condensed in the cool zone at the top of the column. Air

Table 10-1. Efficiency of Various Sorbents for Trapping Iodine in the Form of Butyl Iodide

Sorbent	Temp. (°C)	Face Velocity of Air (fpm)	Butyl Iodide Exposure Time (hr)	Wt. of Butyl Iodide per Vol. of Sorbent (mg/cm^3)	Observed Trapping Efficiency for 2-in. Bed Depth (%)
Silver zeolite	100	50	4	17	99.98
Silver zeolite	100	50	8	35	99.99
Silver zeolite	100	50	20	87	99.88
Silver zeolite	100	50	40	174	98.2
Untreated zeolite	100	50	20	87	20
GX100	100	50	4	17	96.0
GX100	100	50	8	35	88.0
GX100	100	50	20	87	70.7
MSA 85851	26	40	4	17	99.2
MSA 85851	26	40	8	35	98.4
MSA 85851	27	40	20	87	86.1
MSA 85851	27	40	40	174	57.7

containing about 256 ppm butane was then passed over the catalyst at various temperatures. No noticeable oxidation was observed up to a temperature of about 400°C. Further increase in the temperature to 500°C resulted in about 8% oxidation; however, this can probably be attributed to thermal effects.

The almost complete loss of catalyst efficiency in the phosphate test is attributed to the massive overdose employed. We are planning to continue evaluation of the phosphate poisoning effect but using shorter phosphate exposure periods.

Scrubbing of Alkyl Iodides from Air Streams with Mercury Solutions (D. J. Crouse, W. B. Howerton)

The distribution coefficient (D_G^L) of ^{131}I-labeled butyl iodide between 0.1 M HNO_3 (no mercuric ion present) and air was measured to be approximately 2 at 25°C. This distribution coefficient is about a factor of 2 lower than that measured previously[2] for methyl iodide.

Scrubbing Tests. – In earlier tests,[2] highly efficient removal of methyl iodide from air was obtained by dispersing the air into fine bubbles through a glass frit into a column containing mercuric nitrate--nitric acid solution. A high pressure drop across the frit, however, limited the gas flows to relatively low values. Some recent runs were made using a nickel metal frit to disperse the gas into a 2-in.-diam column of solution. The bubbles produced were much coarser and the pressure drop was much lower than when using the glass frit. The absorption efficiency was also somewhat lower although still high.

In three runs with methyl iodide, the methyl iodide concentration in the feed air stream ranged from 0.04 to 0.07 mg per liter of air. In the first run, at an air flow rate of 2 liters per minute and with 32 in. of 0.1 M $Hg(NO_3)_2$--0.1 M HNO_3 in the column, the iodine decontamination factor obtained was 1.2×10^4. The bubbles produced were estimated to be 3 to 4 mm in diameter and there was no apparent coalescence of the bubbles as they traveled up the column. In the second run, under the same conditions but with an air flow rate of 3 liters per min, the iodine decontamination factor was 7×10^3. In this run, the bubbles appeared to be 2 to 3 mm in diameter in the bottom few inches of the column, but there was considerable coalescence, producing bubbles as large as 10 mm in diameter at the top of the column.

A third run was then made, again at an air flow rate of 3 liters per minute but with 32 inches of 0.3 M $Hg(NO_3)_2$--0.15 M HNO_3 solution in the column. The iodine decontamination factor at the higher mercury concentration was greatly improved, being 6.7×10^4. The pressure drop across the column was equivalent to 96 mm of Hg; about 30% of this pressure drop was across the metal frit. In this run the bubbles were large throughout the column, ranging in diameter from 3 to 10 mm. Attempts to increase the air flow rate through the column to 5 liters per minute resulted in extremely unstable operation with the air pulsing

through the solution.

A single run was then made with air that contained ^{131}I-labeled butyl iodide at an initial concentration of 0.045 mg per liter. The air flow rate was 2 liters per min and the column contained 32 inches of 0.1 M $Hg(NO_3)_2$--0.1 M HNO_3. The iodine decontamination factor obtained was 800, which compares with a DF of 7×10^3 obtained above for methyl iodide under approximately the same column conditions.

As described previously,[3] absorption of iodine in the form of alkyl iodides with mercury solutions is inefficient in packed columns operated with the gas phase continuous (this is desirable to minimize the column pressure drop) because of the low solution hold-up in the column. We will try to circumvent this limitation by operating with a column that is packed with porous packing. A source of porous ceramic packing, which reportedly holds 17% of its volume of solution, has been located and some of this packing has been ordered for testing.

References

1. W. E. Unger, et al., Aqueous Processing of LMFBR Fuels Progress Report March 1969, No. 1, ORNL-TM-2552.

2. W. E. Unger, et al., LMFBR Fuel Cycle Studies Progress Report for November 1969, No. 9, ORNL-TM-2795.

3. W. E. Unger, et al., LMFBR Fuel Cycle Studies Progress Report for October, No. 8, ORNL-TM-2764.

11. RADIATION AND SHIELDING (TASK 11)
(J. P. Nichols)

The objective of this task is to develop information on radiation properties and shielding requirements of LMFBR fuels outside of the reactor with emphasis on those properties and requirements that relate to shipping and aqueous processing of these fuels. The work involves development of the basic radiation properties and production data for radionuclides (Task 11.1); development of computer programs for predicting the radiation properties of LMFBR fuel (Task 11.2); development of dose attenuation data for shield materials of interest (Task 11.3); and application of these data to LMFBR fuel cycle processes (Task 11.4).

11.2 Radiation Properties of LMFBR Fuel (Task 11.2)
(M. J. Bell)

Calculations were made with the ORIGEN program to estimate the concentrations of actinides in several types of light water moderated power reactors. These data are useful for estimation of plutonium isotopic compositions that may be recycled to LMFBR's and for comparison of the curium concentrations (thus, the neutron source strength) of LWR fuels with LMFBR fuels.

The feed compositions and burnup characteristics assumed for these calculations are representative of advanced light water reactors charged with enriched uranium and LWR discharged plutonium. They are:

1. An LWR fueled with 3.3% enriched uranium operating at an average specific power of 30 Mw/metric ton of heavy metal charged to the reactor and irradiated to a burnup of 33,000 Mwd/metric ton.

2. An LWR fueled with recycled plutonium and natural uranium operating at an average specific power of 27.5 Mwd/metric ton to 33,000 Mwd/metric ton burnup.

3. A plutonium recycle LWR with depleted uranium discharged from an LWR, also irradiated to 33,000 Mwd/metric ton at a specific power of 27.5 Mwd/metric ton.

The composition of the LWR discharged plutonium and the depleted uranium used for cases (2) and (3) was taken to be that computed for case (1).

Table 11-1 gives the composition of a number of important isotopes in the fresh fuel and in the discharged fuel at 150 days cooling time. More complete information on the composition, activity and heat generation rate of spent LWR fuels will be presented in a forthcoming report.

Table 11-1. Composition of Actinides in Fuel Charge and Discharge from Light Water Reactors

Isotope	Composition (g/metric ton of U + Pu charged to reactor)					
	Enriched Uranium Fuel		Pu Recycle-Natural Uranium		Pu Recycle-Depleted Uranium	
	Charge	Discharge[a]	Charge	Discharge[a]	Charge	Discharge[a]
^{235}U	33,000	7,930	6,930	1,860	8,190	2,280
^{236}U		4,080		846	4,160	3,390
^{238}U	967,000	943,000	968,000	946,000	963,000	942,000
^{237}Np		764		184		936
^{236}Pu		9.50×10^{-4}		2.31×10^{-4}		1.37×10^{-3}
^{238}Pu		306		260		608
^{239}Pu		5,330	15,000	5,620	15,000	5,670
^{240}Pu		2,160	6,230	3,590	6,230	3,650
^{241}Pu		1,000	2,770	2,360	2,770	2,390
^{242}Pu		351	998	2,130	998	2,130
^{241}Am		49.9		170		176
^{243}Am		91.2		1,070		1,040
^{242}Cm		6.6		42.2		42.3
^{244}Cm		31.1		705		669
Total	1,000,000	965,000	1,000,000	965,000	1,000,000	965,000

[a]Concentrations reported after 150 days of postirradiation decay.

12. CRITICALITY STUDIES (TASK 12)
(J. P. Nichols)

The objective of this task is to develop the criticality data and criticality control techniques that are needed for the safe and economical shipment and recovery of LMFBR fuels. Presently, the work on this task consists of process design studies at ORNL, theoretical criticality studies at the Oak Ridge Critical Experiments Facility, and experimental and theoretical criticality studies at the Battelle Northwest Plutonium Critical Mass Laboratory.

The task is divided into seven subtasks. Task 12.1, "Arrays of LMFBR Elements," has the purpose of developing criticality data for the shipment and storage of LMFBR fuel elements. Task 12.2, "UO_2-PuO_2 Solids at Low Moderation," has the purpose of developing the criticality parameters of UO_2-PuO_2 in air and molten metal that are needed for design of head-end equipment and safe arrays of PuO_2 product. Task 12.3, "UO_2-PuO_2 Solids in Fissile Solution," has the purpose of developing criticality data for the design of fuel dissolvers. Task 12.4, "Homogeneous Solutions of Uranium-Plutonium," has the objective of developing criticality data for the design of processes and equipment for feed adjustment, solvent extraction, ion exchange, product evaporation, and plutonium solution storage. Task 12.5, "Computational Techniques," has the objective of developing computational methods that may be used for reliable and accurate prediction of the criticality parameters of systems containing uranium and plutonium. Task 12.6, "Evaluated Criticality Data Compilation," has the purpose of generating a comprehensive compilation of criticality data for systems containing plutonium and mixtures of uranium and plutonium. Task 12.7, "Nondestructive Assay of Fissile Materials," has the objective of developing nondestructive techniques for accountability and control of fissile materials.

12.1 Arrays of LMFBR Elements (Task 12.1)
(D. W. Magnuson)

Preliminary criticality calculations have been made for infinite planar arrays of FFTF and LMFBR fuel elements to establish the basis for the design of fuel element storage facilities. The rectangular arrays were spaced on 12-in. centers in air, water, and sodium. Smeared atom densities, found to be satisfactory in previous calculations,[1] were used to construct a simulation of the core and axial blanket regions filled with air, water, or sodium; these regions were then assumed to be surrounded by a region of either air, water, or sodium. For the air-spaced case, a concrete reflector was included adjacent to the axial blankets but was not included for the water or sodium cases. The KENO Monte Carlo code with 16-group Hansen-Roach cross sections was used because of its applicability to the geometry of these problems. The results are given in Table 12-1.

Table 12-1. k_{eff} Values for Infinite Planar Storage Arrays of LMFBR and FFTF Fuel Elements Calculated by the KENO Monte Carlo Code

Fuel Element	k_{eff} for Infinite Planar Arrays Stored in: Air	Water	Sodium
AI Ref. Oxide	0.917 ± 0.007	0.617 ± 0.007	0.883 ± 0.005
AI Follow-On Outer	0.835 ± 0.006	0.564 ± 0.005	0.750 ± 0.005
GE Follow-On Outer	0.859 ± 0.007	0.562 ± 0.006	0.658 ± 0.004
FFTF Outer	0.799 ± 0.005	0.599 ± 0.007	0.751 ± 0.005

For the elements in water, the leakage is less than 0.2% and the reflectors on top and bottom can be considered infinite. Additional calculations may be required to evaluate the room return through the sodium and sodium-filled blanket regions since the leakage was from 30 to 35%; however, the k_{eff} values would be expected to increase but to be less than the k_{eff} values for the air-spaced calculations.

References

1. W. E. Unger et al., LMFBR Fuel Cycle Studies Progress Report for October 1969, No. 8, ORNL-TM-2764.

13. ENGINEERING STUDIES (TASK 13)
(A. R. Irvine, C. D. Watson)

The purpose of this task is to examine the overall problem of LMFBR spent fuel recovery plant design and to relate the individual problems involved in fuel recovery to the overall problem and to the other individual problems. The plant design surveys which are to be made include adaptation of existing LWR reprocessing facilities for recovery of fuel from FFTF and initial demonstration reactors, possible adaptation of later LWR reprocessing facilities to accept LMFBR spent fuel from commercial reactors during the first decade (or more) of their existence, and, finally, preparation of a conceptual design for a facility that will be needed when a large number of breeder reactors are in use. Individual problems to be evaluated range from special problems in safety and containment (which are peculiar to reprocessing of LMFBR spent fuel) to equipment design and operational procedures to prevent formation of plutonium polymer.

13.1 Existing Commercial Facilities

A study of existing commercial facilities is under way to determine their suitability for reprocessing spent fuel originating in the Fast Test Reactor (FTR). The study will also determine what additional modifications would be required to accommodate fast breeder reactor type fuels from demonstration and early commercial LMFBR's. The general approach is to investigate the lowest capital investment method (consistent with reasonable and safe operating practice) and then to determine the capital investment requirement for obtaining additional development information or lower overall operating cost. The Nuclear Fuel Services, Inc., reprocessing facility is being used as the basis for this study as it is currently the only commercial facility in operation.

General

Plans to visit the Nuclear Fuel Services plant to discuss various aspects of that facility and proposed FTR fuel processing methods were delayed indefinitely because of internal problems at NFS. A list of questions was transmitted to NFS to indicate the areas of greatest interest.

Reference Flowsheets (S. D. Clinton, W. S. Gronier, D. E. Horner)

Material balance flowsheets have been prepared for the processing of four Liquid Metal Fast Breeder Reactor fuel types using as a basis 1000 kg of U and Pu as fed to the reactor. The reactor fuel types considered are the Fast Test Reactor (FTR), Atomics International (AI) Reference Oxide, AI Follow-On, and General Electric (GE) Follow-On fuels. For a reactor fuel involving both core and blanket regions,

it is assumed that reprocessing is performed on an homogenized basis where material from each region is blended in the ratio in which the reactor is fueled.

The reprocessing plant material balance flowsheets for the FTR (see Fig. 13-1), AI Reference Oxide (see Fig. 13-2), AI Follow-On (see Fig. 13-3), and GE Follow-On (see Fig. 13-4) fuels present an estimate of the amount and concentration of uranium, plutonium, fission products, and stainless steel at the various equipment locations. For each case the fuel assemblies are assumed to be decayed for 180 days prior to reprocessing. The different fuel assemblies for the AI and GE reactors were homogenized to coincide with the scheduled rate of reactor discharge. For each flowsheet, the dissolver product concentration was set at 250 g of U and Pu per liter, and the feed to the first TBP solvent extraction cycle was diluted to 70 g of U and Pu per liter. Detailed flowsheets for the first, second, and third solvent extraction cycles for FTR fuel are shown in Sect. 7.0. Due to the higher Pu content of the FTR fuel assemblies (no blanket material present), the aqueous feed in the dissolver is poisoned with 0.2 M boron for criticality control. Presently, it has not been decided whether the unfueled stainless steel gas plenum sections from the shearing operation should be diverted away from the dissolver or pass through it. Approximately 1 wt % of the stainless steel was assumed to dissolve in the boiling 10-13 M HNO_3. The FTR material balance flowsheet has been presented previously,[1] however, a revision is being published due primarily to recent modifications in the TBP solvent extraction cycles and to a change from use of cadmium to use of boron for nuclear poisoning. This latter change was made because of expected adverse behavior of cadmium in the waste during calcination and the benefits to be gained from the presence of boron in the waste calcine. In addition, the cadmium cost would be approximately $750/metric ton of uranium plus plutonium; boron cost will be only about $50/metric ton of heavy metal feed.

Head-End Processing (C. D. Watson, R. S. Lowrie, R. L. Cox, W. S. Groenier, G. A. West)

The Head-End Engineering Evaluation Study was continued of the reprocessing of 180-day decayed FTR fuel in a Nuclear Fuel Services-type plant. Later, AI Reference Oxide, AI Follow-on, and GE Follow-on fuels will be studied and compared to FTR reprocessing. An analysis of the dismantling, shearing, and dissolution processing steps is presently being made. The analysis will include the mechanical processing, sodium deactivation, heat dissipation, and criticality aspects. Initial emphasis has been placed on a study of the mechanical processing equipment at NFS to reveal problem areas, if any, brought about by the physical dimensions of FTR fuel and the possible presence of sodium. During this month an evaluation of the adaptability of the water-filled fuel-storage canal to accommodate FTR fuel was completed as far as practical prior to discussions with Nuclear Fuel Services personnel.

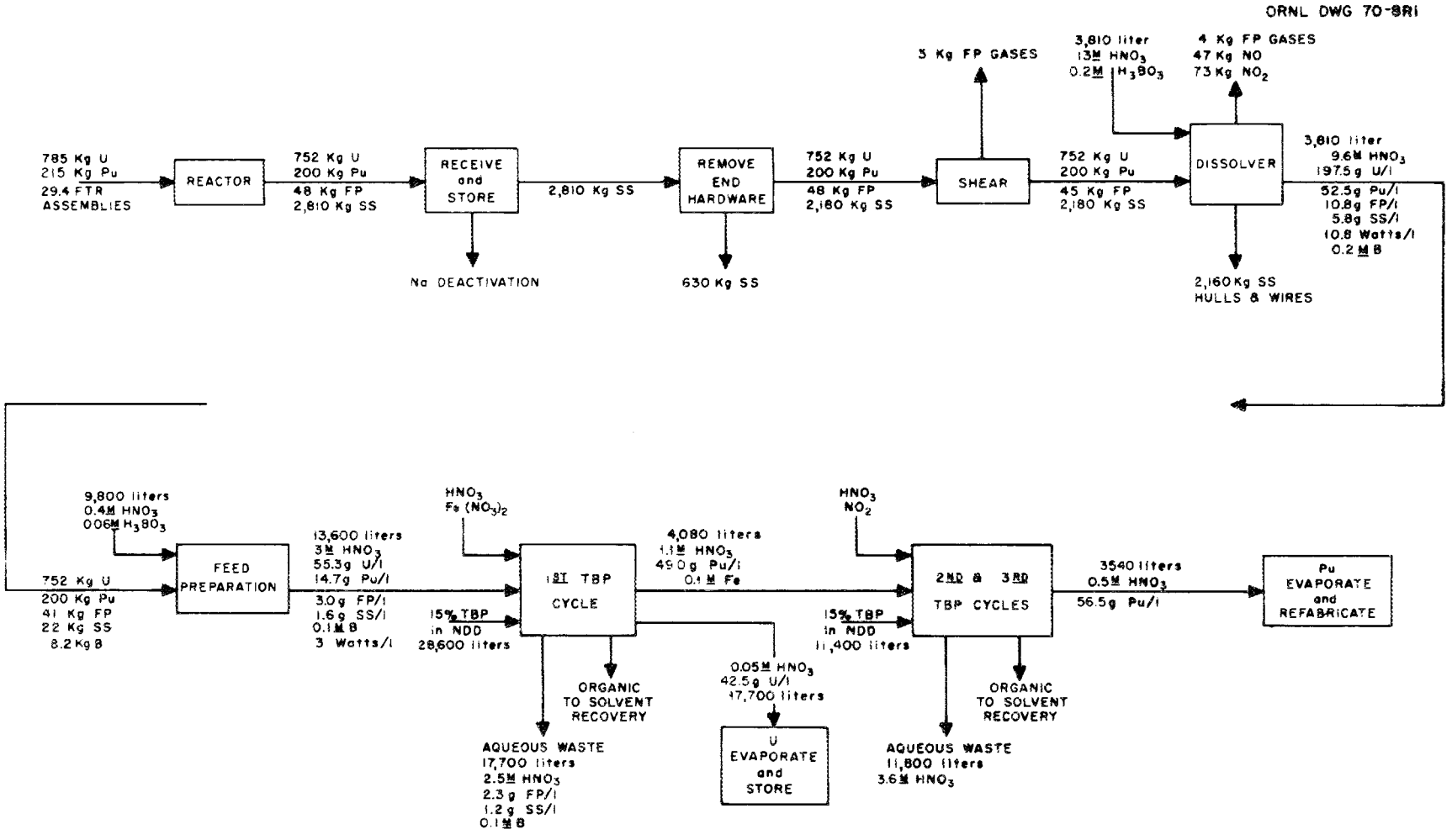

Fig. 13-1 Reprocessing Plant Material Balance for FTR Fuel Assemblies. (with Boron as a Soluble Poison)

ORNL DWG 69-12190R2

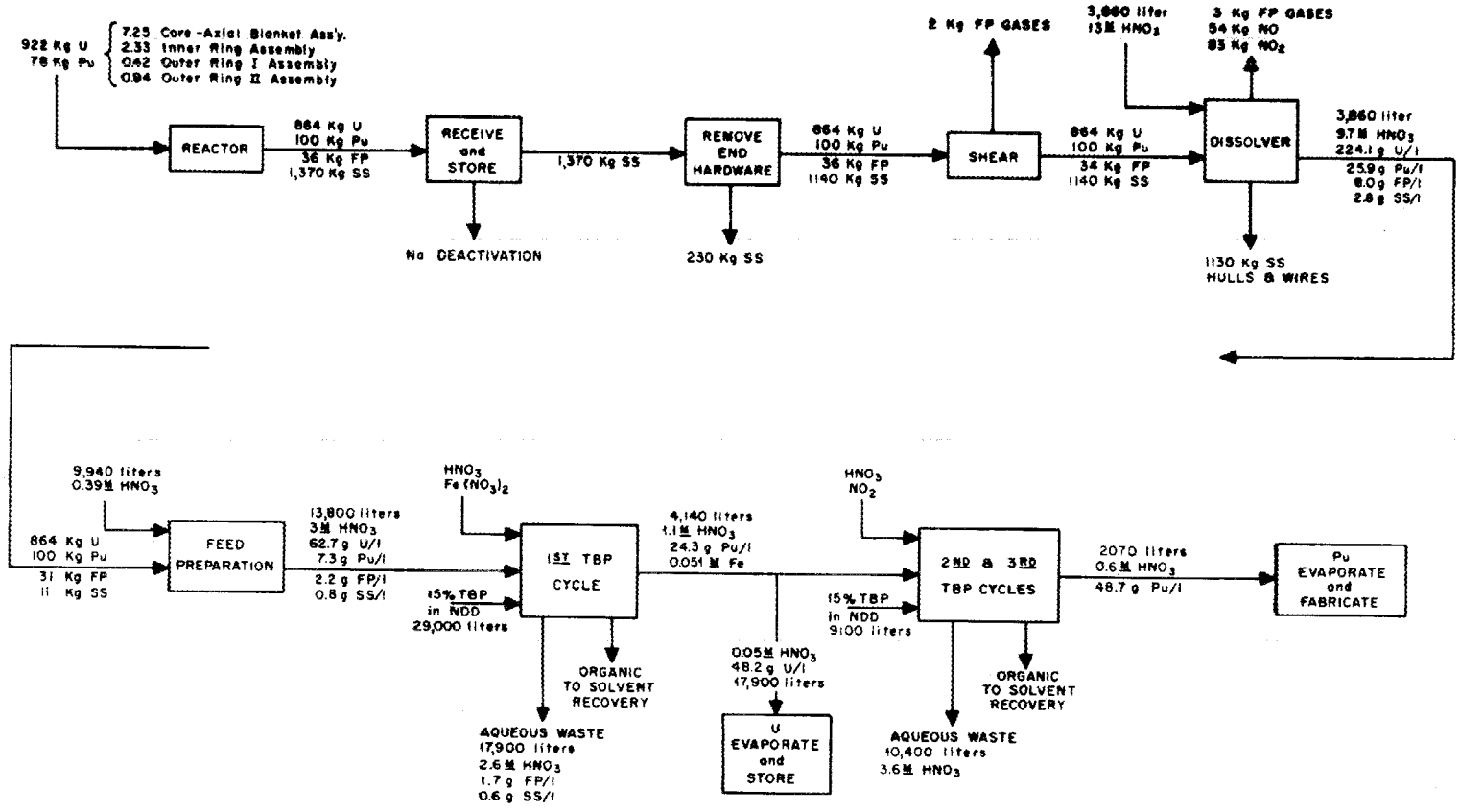

BASIS: 1,000 Kg (Pu + U) AS CHARGED TO THE REACTOR PER DAY

Fig. 13-2 Reprocessing Plant Material Balance for "AI" Reference Fuel Assemblies.

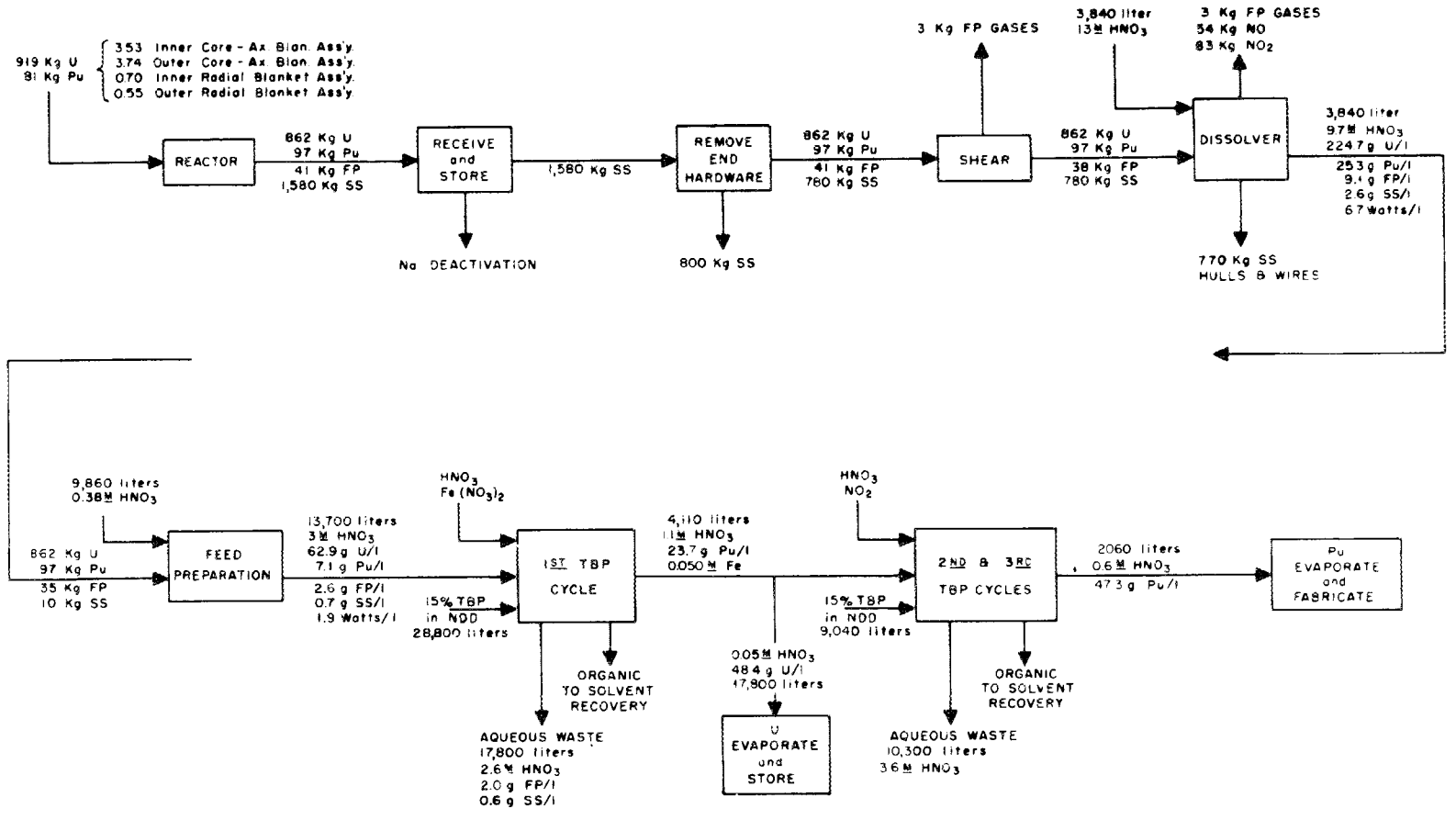

BASIS: 1,000 Kg (Pu + U) AS CHARGED TO THE REACTOR PER DAY

Fig. 13-3 Reprocessing Plant Material Balance for "AI" Follow-On Fuel Assemblies.

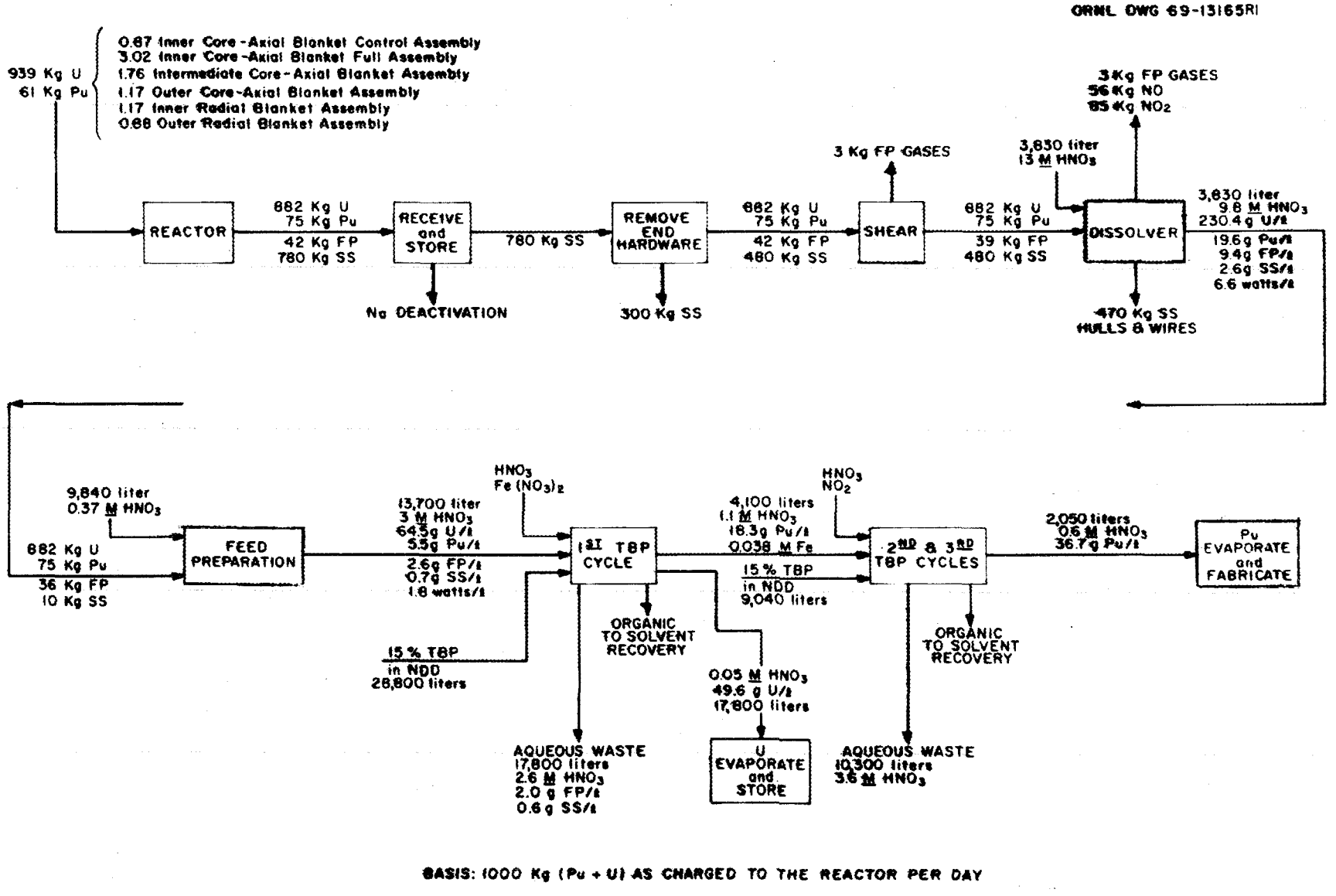

Fig. 13-4 Reprocessing Plant Material Balance for Homogenized GE Follow-On Fuel Assemblies.

The basic assumptions made for this study of the fuel storage canal were:

1. All of the external sodium on the fuel assemblies was deactivated and removed prior to their receipt in the canal. Further, cleaned fuel assemblies with detectable ruptured fuel rods were sealed in water-filled cans before being sent to the canal.

2. Fuel assemblies were received at the canal decayed a minimum of 45 days.

From an operating standpoint, no major problems should arise since most of the equipment has been used in previous campaigns. It will probably be necessary to increase the cooling capacity, increase the ion-exchanger capacity to accommodate an increased sodium load, and modify the existing storage baskets to handle FTR fuel.

Preliminary shielding calculations indicate that the dose rate at the surface of the pool, assuming 11 ft of water over the top of 45-day cooled fuel assemblies stored in a square array (20 in. center to center), would be less than 1 mr/hr. Criticality calculations (see Sect. 12.1) show that FTR fuel assemblies stored in water in a square array (12 in. center to center) are subcritical. The calculated $K_{effective}$ value was 0.599 ± 0.007.

Criticality (A. R. Irvine, J. D. Rollins, O. O. Yarbro)

No serious criticality problem in the head-end portion of the facility is present other than in the dissolver and solvent extraction system feed tanks. In the case of the dissolver, calculations indicate that criticality can definitely be avoided through use of 0.2 M boron in the dissolvent, 8 in. diam poisoned baskets, and by maintaining the liquid level down to a point only slightly above the top of the fuel baskets. Higher fluid levels would be acceptable except in the presence of gross amounts of undissolved fuel. Higher fluid levels are not desirable, however, in dissolving FTR fuel as they would result in a dissolver product with an undesirably low metal content. The tanks receiving the dissolver product will be subcritical provided the mole ratio of boron to fissile plutonium is ≥ 1 or if cadmium to plutonium is ≥ 0.25. In practice larger ratios than those indicated would be desired to provide a margin for safety.

Preliminary investigations of criticality problems in the extraction column indicate that the critical fissile plutonium concentration in the jacketed portion is 44 g/liter and is 61 g/liter in the unjacketed scrub portion in the absence of dissolved nuclear poisons. When using 15% TBP as the extractant, borderline conditions can be produced by gross deviation from standard flowsheet conditions.

However, we believe that the use of nuclear poisons in the scrub solution and the presence of nuclear poison in the extraction column feed solution will eliminate the problem in this column.

II. FUEL MATERIAL PREPARATION

R. G. Wymer, R. E. Brooksbank, R. E. Leuze,
J. P. McBride, W. D. Bond, P. A. Haas

1. CONVERSION STUDIES

(R. E. Brooksbank)

In the LMFBR fuel cycle, it would be highly advantageous to convert the product solutions from the fuel reprocessing plants to solid fuel materials that are suitable both for shipping and for direct use in refabrication of fuel elements. Earlier fuel cycle studies have not necessarily optimized the conversion to meet both of these requirements. In order to meet both requirements, the solids must be in the desired chemical form with the necessary purity. In this study, we hope to determine the best method for accomplishing the desired conversion. Although the major emphasis will be placed on conversions to oxides, the conversion to advanced fuel forms (such as carbides, nitrides, and carbonitrides) will be included in our studies.

We are studying processes that are currently in use or under development; an economic evaluation is being made prior to undertaking extensive laboratory and engineering process studies. The conversion processes being evaluated include a variety of approaches, such as fluidized-bed conversion, flame denitration, sol-gel, and numerous precipitation processes.

1.1 Sinterable Powder Preparation

(W. D. Bond, P. A. Haas, R. E. Brooksbank)

Laboratory and engineering studies of the conversion of aqueous solutions of uranium and plutonium to powders will be initiated after our process evaluation studies (Sect. 1.2) have indicated which of the possible methods are the more promising.

1.2 Process Evaluation

Currently plutonium is shipped from chemical processing plants as a nitrate solution. While this is satisfactory at present, safety considerations will probably dictate that the increased quantities of plutonium that will result from LMFBR fuel processing be shipped in a solid form. The objectives of this program are to define the most reasonable form for shipment to fabrication plants and to develop or adapt processes for this purpose. Processes currently used or being developed will be studied, and an economic evaluation will be made to establish the most promising approach. This work will, in turn, provide guidance for further experimental work. As a need for further developmental work is recognized, it will be reported.

The existing methods under study include those that are most likely to be used in production of first generation fast reactor fuel elements. They are: (1) dry powder blending of oxide powders for pelletizing, (2) coprecipitation of plutonium and uranium to provide a mixed oxide for

pelletizing, and (3) use of the sol-gel method to form either separate or blended UO_2 and PuO_2 microspheres or pelletizing stock. These are the most directly useful conversions, but if it appears desirable to convert to an intermediate solely for shipping purposes, this can also be considered.

1.2.1 Chemical Conversion (F. E. Harrington, J. D. Sease, R. B. Pratt)

We completed the study of the costs involved in four alternative routes to the fuel preparation and fuel element fabrication for a specific LMFBR, as described earlier.[1] The first draft of the report of this cost study was circulated internally, and the resulting comments are being evaluated.

Additional detailed cost studies will not be started until the conversion process has been more clearly defined.

1.2.2 Shipping and Storage (R. W. Horton)

Earlier studies[1] have shown that shipping solid oxide is significantly lower in cost (based on current charges) and much safer than shipping a nitrate solution. We are continuing to study the factors involved in optimizing the forms of uranium and plutonium to be shipped from the reprocessing plant to the fuel fabricators.

1.3 Advanced Fuel Studies
(W. D. Bond)

Increasing demands on reactor fuels make the development of new or improved fuels important. Among the more promising advanced fuel materials for the LMFBR are the monocarbides, carbonitrides, and nitrides of plutonium and uranium. Sol-gel processes for the preparation of these materials are being developed on a laboratory scale. Stable, codispersed oxide-carbon sols are prepared by effecting dispersion of carbon black in UO_2, PuO_2, or PuO_2-UO_2 sols be ultrasonic agitation, and the oxide-carbon sols are then formed into gel microspheres or shards. After drying the gels to remove volatile materials, the gels are converted either to the monocarbide or to nitrides or carbonitrides, depending on the atmospheres used in carbothermic reduction. Monocarbides are formed when the reduction is under vacuum or inert gas atmosphere, whereas nitride or carbonitride conversion is effected under a nitrogen atmosphere.

Most of our work has been concerned with the preparation of carbides. We have previously demonstrated the preparation of dense ThO_2 and $(Th,U)C_2$ microspheres by sol-gel processes. We have also prepared uranium carbide and plutonium carbide microspheres on a laboratory scale. We are now studying the preparation of uranium-plutonium carbide spheres and of uranium-plutonium carbonitride. Kinetic studies are being carried out on the carbothermic synthesis step to gain a better understanding of the rate-controlling mechanism.

---

[1] LMFBR Fuel Cycle Studies Progress Report No. 5, ORNL-TM-2671 (August 1969).

1.3.1 Fundamental Studies of (U,Pu)(C,N) Synthesis (T. B. Lindemer, W. L. Moore)

We have started a program for the study of the kinetics and thermodynamics of the carbothermic synthesis of $(U_{0.8}Pu_{0.2})(C,N)$. The conversion equipment to be used for this work (located in Building 3019) is comprised primarily of a fluidized bed furnace that was originally used to apply carbon coatings to microspheres. Three runs on this equipment were made with UO_2-C sol-gel shards to determine the operating characteristics of the system. We found that the product of these runs had an ultimate oxygen content of 1.2 to 1.7 wt % O_2, and a total carbon content that decreased with time of conversion. We know from previous work by Leitnaker, Notz, and Beatty that the oxygen content should be a few hundred parts per million. These results strongly indicated that the fluidizing gas was contaminated with oxygen or that the original piping was inadequate for this application. We have, therefore, replaced the original plastic gas lines with stainless steel tubing, and have also installed a gettering system to remove oxygen and water from the argon and nitrogen. Several items of auxiliary equipment have been designed and built for oxygen-free containment and transfer of the oxide-carbon feed and of the carbonitride product. An oxygen meter is also being built to monitor the oxygen potential in the systems; this instrument is capable of indicating oxygen pressures from 0.2 to 10^{-38} atmospheres of oxygen.

Since this work will require several small batches of sol-gel material that have widely varying ratios of metal to carbon, a second box is being converted for use as a shard preparation box. The external utilities to this box have been installed and there are a few minor installations left on the inside of the box. Equipment to dry the material and to adjust the oxygen to metal ratio of the oxide is almost complete.

Work in the immediate future will be concerned primarily with completion of the equipment modifications and construction. Precautions will be taken to ensure that the equipment is capable of maintaining an environment that has a low oxygen potential; this is essential to the control of the carbon to nitrogen ratio and of the oxygen content of the product. Sol-gel $(U,Pu)O_2$-C material to initiate the studies in this system has been obtained.

2. SOL-GEL PROCESSES FOR PREPARATION OF LMFBR RECYCLE FUEL
(R. E. Leuze)

Sol-gel processes are ideally suited to the preparation of LMFBR recycle fuel since they can be readily adapted to continuous and remote operation for processing materials behind shielding. The processes under development prepare sols by controlled solvent extraction of nitrate from plutonium and uranium nitrate solutions, the products from fuel reprocessing plants. The sols are then converted to the desired ceramic forms, usually high density oxide microspheres, required for subsequent fabrication into recycle fuel elements. This section reports progress for all of the process development and demonstration, equipment design, and instrument development being carried out to obtain sufficient information for design of a full scale facility. Also included is the preparation of sol-gel materials required for testing and for use in other parts of the LMFBR fuel cycle program.

2.1 Urania Sol Process and Equipment Development
(J. P. McBride)

Although the LMFBR recycle fuel under consideration is mixed urania-plutonia, study of urania sol preparation is important because urania is used as a fertile material in an LMFBR and is the major component in the mixed oxide. Urania sols are also useful for studying other phases of the program such as sphere forming and tray drying.

The CUSP process (Concentration Urania Sol Preparation) developed at ORNL has been selected as the method for preparation of urania sols since it is most amenable to scale-up and consistently produces good sols with desirable characteristics.[1,2] This section of the report covers all aspects of CUSP sol preparation including uranous nitrate feed preparation, laboratory- and engineering-scale process development, sol preparation, and equipment design and instrumentation.

Equipment Development (B. C. Finney)

The development of contactor concepts for preparing urania sol by the CUSP process in the Pilot Plant (Bldg. 3019) was continued. A series of six runs was made using the packed column contactor that had been moved from the Pilot Plant to Bldg. 3503 and reported last month.[3] The purpose of the current work was to evaluate a perforated plate and a spray header for dispersing the aqueous phase into the organic solvent and also evaluate what effect slight variations in operating procedures, especially during the second nitrate extraction cycle (i.e., crystallization period), might have on the UO_2 sol product. The runs were made operating organic continuous with co-current downflow.

The 1/2-in. ceramic Berl saddles were removed from the 2-in.-ID x 36-in.-long glass pipe[3] and a perforated fluorothene plate (25 equally spaced 0.125-in.-diam holes) was used to disperse the aqueous phase into the organic solvent for Runs PPHB-7 and 8 (Table 2-1). The aqueous was

Table 2-1. Summary Data for the Preparation of Urania Sol by the CUSP Process Using a Free-Fall Column

Run No.	PPHB-7[a]	-8[a]	SCHB-9[b]	-9A[b,c]	-10[b]	-11[b,d]	-12[b,d]
U, mg/ml	235.0	230.2	239.8	238.3	238.3	240.3	239.3
U(IV), % U	76	79	86	87	88	85	89
NO_3^-, mg/ml	6.74	7.87	7.63	6.24	6.84	6.58	4.58
NO_3^-/U, mole ratio	0.109	0.13	0.12	0.10	0.11	0.106	0.07
Conductivity, μ mhos/cm @ 25°C	3648	3420	4275	2860	3329	4184	2668
Conductivity at start of first extraction (feed), μ mhos/cm	68200	67200	67000	-	68500	65300	67000
First extraction time, min	116	116	119	-	124	115	119
Conductivity at start of second extraction, μ mhos/cm	4000	4000	35000	-	35000	35000	35000
Peak conductivity during second extraction, μ mhos/cm	71000	63000	41300	-	38300	36300	36500
Time above 40,000 μ mhos (second extraction)	67	63	8	-	0	0	0
Second extraction time, min	86	72	54	-	64	69	71

[a]A perforated fluorothene plate (twenty-four 0.125-in.-diam holes) used to disperse aqueous phase in organic.

[b]A spray header (3/4 in. diam with six 0.125-in.-diam holes) used to disperse aqueous phase in organic.

[c]The sol from Run SCHB-9 was left in the equipment overnight and additional NO_3^- was extracted.

[d]The U(IV) nitrate feed solution for Runs SCHB-11 and 12 was prepared in a 9-in.-ID reductor, whereas, the feed solution for previous runs of this series (PCHB-1 through SCHB-10) was prepared in a 6-in.-ID reductor.

satisfactorily dispersed into droplets but gas collected below the perforated plate during crystallization disrupting the flow of aqueous and organic down through the plate. The second nitrate extraction was started when the conductivity of the aqueous phase reached 40,000 μ mhos (~57°C) and the rate of nitrate extraction was regulated to hold the conductivity above 40,000 μ mhos for ~1 hr at 62°C. This mode of operation apparently resulted in excessive oxidation as indicated by the U(IV) contents of 76 and 79%.

A spray header (3/4 in. diam with six 0.125-in.-diam holes) was used to disperse the aqueous phase for Runs SCHB-9 through 12. The aqueous phase was satisfactorily dispersed into droplets and the gas released during crystallization was vented off through the annulus space between the spray header and glass pipe with no disruption of the flowing streams. The procedure used for these runs was to start the second nitrate extraction when the conductivity of the aqueous phase reached 35,000 μ mhos/cm and to regulate the rate of nitrate extraction to hold the conductivity below 40,000 μ mhos. The final conductivities of the sols were intentionally varied to prepare sols with a range of NO_3^-/U mole ratios.

The U(IV) nitrate feed for Runs PPHB-7 through SCHB-10 was prepared in a 6-in.-ID reductor and the feed for Runs SCHB-11 and 12 (2 sol runs/feed batch) was prepared in a 9-in.-ID reductor. There is no discernible difference in the feeds as determined by a chemical analysis (see Table 2-2). The difference in reduction times of 1.47 hr and 3.87 hr would indicate that the 6-in.-ID reductor is more efficient than the 9-in. reductor.

Table 2-2. U(IV) Nitrate Feed Analysis

Run No.	RR-73[a]	SR-29[b]
Sol Run No.	SCHB-9 and 10	SCHB-11 and 12
U, mg/ml	241.2	239.9
U(IV), %	76.6[c]	77[c]
NO_3^-, mg/ml	126.9	128
NH_4^+, mg/ml	0.014	0.014
C, mg/ml	4.57	5.55
$HCOO^-$, mg/ml	17.1	20.6
pH	1.04	1.04
Density, g/cm^3	1.3367	1.3368
Conductivity, μ mhos/cm	59964	62586
Reduction Time, hr	1.47	3.87

[a]Feed prepared in 6-in.-ID reductor.

[b]Feed prepared in 9-in.-ID reductor.

[c]Analyses of fresh feed samples in H_3PO_4 are usually low; control chemical tests indicated >99% U(IV).

The UO_2 sols prepared during Runs PPHB-7 through SCHB-12 will be characterized and conductivities monitored as a function of time to determine what effect the various modes of operation have on the properties of the sols.

2.2 Urania-Plutonia Sol Process and Equipment Development (R. E. Leuze)

This section of the report covers all aspects of mixed urania-plutonia sol preparation including preparation of high-nitrate plutonia sol, special treatment of CUSP sol prior to mixing with plutonia, techniques for mixing plutonia and urania sols, and treatments required to produce satisfactory mixed sol ready for subsequent processing into the desired ceramic form. Progress on equipment development and engineering-scale demonstration is also reported here.

Efforts at the present time are directed at setting process conditions and preparing equipment in order to demonstrate engineering-scale preparation of mixed UO_2-PuO_2 and to produce several kilograms of irradiation test material. In the process selected for this demonstration, urania sol is pretreated to remove excess formate and is then mixed with a high-nitrate plutonia sol prepared by an alcohol extraction process (APEX). The mixed sol is contacted with a secondary amine to extract excess nitrate and is subsequently formed into microspheres or shards which can be dried and calcined to dense oxide product.

Mixed Plutonia-Urania Sol Flowsheet Development (O. K. Tallent and M. H. Lloyd)

A series of experiments are presently in progress to prepare $(U\text{-}Pu)O_2$ microspheres by the CUSP-APEX mixed sol process. The purpose of these experiments is to demonstrate the reproducibility and reliability of the process on a laboratory scale. The flowsheet used, which involves plutonia sol preparation, pretreatment of urania sol, sol blending, and microsphere forming has been previously reported.[4]

When completed, this series will have involved the preparation of four APEX sols, blending each APEX sol with each of three CUSP sols and forming each batch (~10 g of total metal) into microspheres. The series will therefore consist of 12 microsphere-forming runs in which the behavior of four plutonia sols and three urania sols are compared. Although the primary purpose of this work is to demonstrate reproducibility of mixed sol-forming behavior, two sol parameters, concentration and nitrate content, were varied. The concentration of the plutonia sol was varied from 0.5 to 1.1 M and the NO_3^-/Pu mole ratio was varied from about 0.5 to 0.8. Urania sols were selected in which the NO_3^-/U mole ratio varied from 0.09 to 0.13.

A principal difficulty in an objective evaluation of sols is that they must be judged in part by forming behavior and microsphere

characteristics, and these properties are subject to numerous forming, drying and calcining variables in addition to sol characteristics. In order to isolate these effects, each mixed sol was formed in three individual batches. Since a still was not used in the forming column system, each batch was formed under conditions which varied with regard to water content of the solvent, pH, etc. Two drying conditions were also evaluated. Gel spheres were dried rapidly in argon and slowly in air prior to calcination. During the course of the experiments, solvent pH and surfactant concentrations were varied somewhat to qualitatively ascertain the effects of these variables. These variations were not intended to optimize forming and drying conditions, but they were extremely helpful in isolating effects which can be controlled by forming and drying conditions.

A detailed evaluation of these runs will be made next month; however, several preliminary observations can be made.

1. Consistently uniform APEX sols can be made in extraction equipment designed for this purpose. Conductivity measurements and simple acid-base titrations to determine total nitrate are useful to control necessary end-points.

2. In all cases, mixed sols maintained at 0°C remained fluid during the course of the experiments (4 to 6 hr), and flow characteristics to the forming column and in the two-fluid nozzle were excellent.

3. Although forming and drying conditions have not been optimized, it is presently possible to consistently prepare calcined microspheres (400 to 600 μ in diameter) in 90% yield on a laboratory scale (batch size contains 10 g of metal).

4. Four types of particle malformation were observed during microsphere preparation. These were coalescence of wet spheres in the forming column, cherry pitting, sphere cracking (which can be described as surface peeling), and microsphere cracking which results in the worst case in two half-spheres. Cherry pitting can be completely controlled by variations in surfactant, solvent water content and pH. Coalescence can probably be eliminated by appropriate selection of these variables. Surface peeling appears to be primarily associated with drying conditions. It was eliminated completely by rapid drying of the gel microspheres, and was aggravated by prolonged contact of gel spheres with solvent. Particle cracking, resulting in half-spheres, appears to relate to several variables. It can be expected that this problem will be the most difficult to eliminate in large-scale runs. However, the present work suggests that forming and drying conditions are extremely important in minimizing this problem.

5. All sol combinations evaluated in this series appear to be capable of producing microspheres in high yield if appropriate forming and drying conditions are selected; however, a wider range of forming conditions can be tolerated when the sol system is optimized to obtain maximum metal concentration and the minimum nitrate concentration consistent with good sol stability.

2.3 Sphere Preparation
(P. A. Haas)

All information concerning the conversion of urania and urania-plutonia sols into microspheres of the desired size and with the desired properties is reported here. This includes studies on sphere-forming, chemistry of the sphere-forming column, recycle of the drying alcohol, drying and firing of gel spheres, and classification of the fired particles. The latest information on adapting these process steps and equipment to remote operation is also included.

Factorial Forming Experiments for CUSP UO_2 Sols (P. A. Haas, A. B. Meservey, W. L. Pattison, W. D. Bond, J. P. McBride)

An experimental program is in progress to determine the effects of selected variables on the formation of gel spheres from CUSP UO_2 sols. The principal variables will be studied by a series of factorial design experiments and secondary variables will be checked by simple comparisons.

We have results for the three preliminary solvent compositions and for solvent cleanup versus noncleanup for the high Ethomeen-low Span composition. The following generalizations from UNOP tests are listed in the approximate order of decreasing magnitude of the effects. The first three generalizations are clear-cut and easy to see while the remainder are less clear-cut and a different observer might estimate different absolute values and order of magnitude.

1. The 0.8 v/o Span resulted in a wrinkled or "raisin" type of distortion over about one-third the surface of every particle. The remaining two-thirds of the surface of each particle was smooth. The 0.2 and 0.5 v/o Span gave none of this distortion.

2. The 0.05 v/o Span gave much more clustering and doublets than 0.2 v/o Span (5 to 40% doublets and clusters compared to 2 to 5%).

3. Gel spheres kept in Ar showed much less cracking and showed shinier surfaces than gel spheres dried in air at room temperature.

4. The first sample formed in a batch of 2 EH is of poorer appearance than the remaining three samples. This effect is smaller than the effect of air drying versus Ar atmosphere.

5. The 0.8 v/o Span gave duller and/or grayer surfaces than the lower Span concentration.

6. The 0.2 v/o Span gave samples with about 2% doublet particles from coalescence while the 0.8 v/o Span gave no doublets.

7. The high Ethomeen concentration resulted in a surface spalling type of cracking.

8. The difference between two standard 1 M CUSP UO_2 sols was small.

9. The effects of washing the surfactants and part of the 2EH with HNO_3-NaOH-very dilute HNO_3 to pH of 4.5 were small. The observed effects were probably due more to the reduced surfactant concentrations and/or $NaNO_3$ remaining in the 2EH rather than from washing. Stable emulsions were formed even with a very dilute HNO_3 wash. Higher Span concentrations and/or demineralized water washes made emulsions even more troublesome.

One Ethomeen-Span factorial experiment described in the November report,[5] was completed. The best column conditions at pH ~ 4.5 and 28°C, with about 1.2% H_2O in the 2EH, are in the region of 0.05 to 0.2 volume percent Ethomeen S/15 with about 0.2 volume percent Span 80. Sixteen different surfactant conditions were run, comprising the mixtures of zero, 0.05, 0.20 and 0.80 volume percent of Ethomeen with these same four levels of Span. Six sols were carried through the experiment. At zero and 0.05% Span levels, clustering occurred in at least some of the sols no matter what the Ethomeen concentration. At 0.2% Span, clustering was not a significant problem. At 0.8% Span, wrinkle-pitting (the raisin distortion) was prevalent at zero and 0.05% Ethomeen levels. Several high yields (50 to 95%) were obtained at 0.2% and 0.8% Ethomeen in 0.8% Span, but the high surfactant level caused problems of abrasion, cracking, or excessive emulsification, so that we prefer the 0.2% Span level over the 0.8% level.

Clustering with no Span was almost stopped by the highest Ethomeen level (0.8%), but this high level caused emulsification problems, so that we prefer to use Span as the anticlustering agent. If any Span is used (at least in an acidic medium), wrinkle-pitting becomes prevalent unless Ethomeen is added to prevent the pits and smooth the surfaces of the microspheres. Thus, Span-Ethomeen mixtures are distinctly better than either surfactant alone.

Differences were apparent among the several lots of UO_2 sols, some being more prone to cluster and some forming better or worse beads than others in the range of conditions tested. Our first results have been somewhat confused by cracking problems and we cannot yet pick the best sols. The cracking seems to have occurred during air exposure after argon drying at 200°C; exposure to air would not occur during normal operation. Some of the work will be repeated with modified procedures. In the absence of cracking, high yields (>90%) look probable for most CUSP sols in mixtures of 0.05 to 0.2% Ethomeen with 0.2% Span.

2.4 Preparation of Sol-Gel Test Materials
(W. T. McDuffee)

Preparation of sol-gel materials for use in other parts of the LMFBR fuel cycle program is reported here. This includes materials for irradiation capsules and the development of fuel fabrication techniques such as Sphere-Pac or pellet formation.

Preparation of Enriched Urania Sol (W. T. McDuffee)

Urania sol containing 2.7 kg of 93% enriched uranium was prepared by the precipitation-peptization method (pH 7.5).[6] The bulk (2.1 kg U) of this material was made for blending with PuO_2 sol for the preparation of dense mixed oxide microspheres (see below) for the EBR-II Series II irradiation specimens. The rest of the sol was to be used in HTGR fuel preparation studies.

During the course of the work, sol preparation techniques continued to improve and 1.0 to 1.1 M, stable UO_2 sols are now readily prepared at a >90% yield. The amount of peptizing acid was also decreased to give NO_3^-/U mole ratios in the final sols of 0.1 to 0.12, with no noticeable differences being observed in the time required for complete dispersion and peptization. Prior to blending these UO_2 sols with PuO_2 sols the "free formate" was extracted with dry n-hexanol. Since the n-hexanol also extracts water, UO_2 sols of up to 1.55 M U were obtained. These sols have been stable (i.e., deposited no solids on standing) and did not gel or noticeably thicken during a week of storage under argon.

Preparation of Dense (0.2 Pu, 0.8 $^{235}U)O_2$ Microspheres (W. T. McDuffee)

Approximately 1.5 kg of dense (0.2 Pu, 0.8 $^{235}U)O_2$ microspheres are to be prepared for loading the EBR-II, Series II irradiation specimens by the Sphere-Pac technique. Approximately 65% of the total is to be in the 200 to 400 μ diam range and the balance in the <44 μ range. The larger size fraction has been prepared and is being classified into the intermediate sizes required. Preparation of the smaller size fraction will begin immediately upon completion of the classification-characterization of the larger size fraction.

In preparing the mixed PuO_2-UO_2 sols from PuO_2 sol and the enriched UO_2 sol (previously extracted with n-hexanol to reduce the formate concentration) we are limited to batch sizes of ~200 g U + Pu because of criticality considerations. In addition and for the same reason, the enriched UO_2 sol is prepared in batches of 300 g U each. Some batch-to-batch differences in microsphere forming behavior of the mixed oxide sols were observed. These are seen not only in the sphere-forming behavior but also in the physical appearance and characteristics of the gel and dense oxide microspheres. In the early phases of the program during which the range of operating conditions for microsphere forming were explored, rather large fractions of the dried gel microspheres were cracked when removed from the forming column and the yield of round crack-free dense microspheres varied widely. From an initial low yield of 25% this has increased to as high as 90% in some of the later batches. The particle densities of those lots so far characterized are >95% of theoretical with 15 psi Hg porosity of <1%. However, the "tap density" has been 58 to 60%, somewhat lower than the desired 61 to 62%. Since it has been noted in the past that firing at 1450°C noticeable increases the "tap density", it is felt that these microspheres will be suitable for use in loading the irradiation specimens.

Small Diameter Urania Microspheres (P. A. Haas)

Small diameter (<44 μ) microspheres (see above) are being prepared from urania sol without the addition of plutonium. In experimentation on the Sphere-Pac technique these will be used to fill the void spaces between the larger spheres.

Two batches of -325 mesh urania microspheres were prepared for the Metals and Ceramics Division, using the new nonfluidized sphere-forming system.[7] About 1600 g of microspheres with a mean diameter of 25 μ was prepared for irradiation testing from 2 M UO_2 sol using 2-ethyl 1-hexanol as the drying alcohol. An additional 650 g of microspheres with a mean diameter of 15 μ was prepared for Sphere-Pac development from 1 M UO_2 sol using isoamyl alcohol as the drying solvent.

References

1. J. P. McBride, K. H. McCorkle, W. L. Pattison, and B. C. Finney, "Preparation of Concentrated, Crystalline Urania Sols by Solvent Extraction," presented at the 15th Annual Meeting of the American Nuclear Society, Seattle, Washington, June 15-19, 1969; summary published in Trans. Am. Nucl. Soc. 12, 206 (1969). Submitted for publication in Nuclear Applications.

2. J. P. McBride, K. H. McCorkle, and W. L. Pattison, LMFBR Fuel Cycle Studies Progress Report, No. 5, August (1969), ORNL-TM-2671, p. 52.

3. B. C. Finney and F. G. Kitts, LMFBR Fuel Cycle Studies Progress Report, No. 9, November (1969), ORNL-TM-2795, pp. 51, 52.

4. O. K. Tallent and M. H. Lloyd, LMFBR Fuel Cycle Studies Progress Report for October, No. 8, November (1969), ORNL-TM-2764, pp. 64, 65.

5. W. D. Bond, P. A. Haas, and J. P. McBride, LMFBR Fuel Cycle Studies Progress Report, No. 9, November (1969), ORNL-2795, pp. 56, 57.

6. J. P. McBride (compiler), Laboratory Studies of Sol-Gel Processes at the Oak Ridge National Laboratory, ORNL-TM-1980, p. 30 (September 1967).

7. Chem. Tech. Div. Ann. Prog. Rept., May 31, 1969, ORNL-4422, pp. 248-250.

III. FUEL FABRICATION AND EVALUATION

(A. L. Lotts, C. M. Cox, J. D. Sease, and
T. N. Washburn)

The primary emphasis of fuel fabrication and evaluation studies related to the fuel cycle for the liquid-metal fast breeder reactor is on oxide fuels. The objective of our program is to obtain an economically optimized $(U,Pu)O_2$ fuel cycle for a liquid-metal fast breeder reactor by extending the performance capability and advancing the fabrication technology of oxide fuels. These fuels have the most advanced technology and greatest potential for reliable operation in first-generation LMFBR's. They have been tested in fast-flux environments but as yet have not been exposed under actual prototypic conditions. Currently, the burnup and heat rate are limited to about 50,000 Mwd/metric ton and 16 kw/ft, respectively, based on irradiation experiments with fuels that are not necessarily optimized for thermal, chemical, and mechanical performance.

The capability of oxide fuels can possibly be improved by adjusting structures or void distribution in the fuels. We emphasize irradiating fuels derived from the sol-gel process with thoroughly characterized structures and void distributions different from those of the oxide fuels irradiated heretofore. These include fuels fabricated by Sphere-Pac, vibratory compaction, extrusion, and pelletization. We compare the performance of these with the performance of reference fuels such as pellets derived from mechanically blended powders and coprecipitated material. The development of computer programs to assist in the analysis of test results and the development of a mathematical model to predict the performance of a fuel rod are integrated with the test program.

1. FABRICATION DEVELOPMENT

(J. D. Sease)

The purpose of our fabrication development work is to provide suitable fabrication processes for sol-gel-derived materials and to fabricate irradiation test specimens and capsules for a variety of irradiation tests.

1.1 Process Development

This work is currently concerned with the engineering-scale development of the Sphere-Pac process and the development of sol-gel pelletization techniques for the fabrication of irradiation test specimens.

1.1.1 Sphere-Pac (C. R. Reese)

The purpose of the Sphere-Pac development program is to study the variables that affect the use of vibratory loading of fuel microspheres. In previous experiments the fine thoria microspheres used to infiltrate the coarse bed were predominantly $-44^{+}30$-μ sized particles. As the mean particle size of the coarse bed distribution was decreased the coarse bed density increased, whereas the total density decreased rapidly. The fines used for infiltration were too large to afford efficient packing. A cursory study in which a ThO_2 coarse bed was infiltrated with $-25^{+}15$-μ UO_2 fines showed an increase in packing efficiency. The Chemical Technology Division was requested to supply $-25^{+}5$-μ ThO_2 microspheres for further study.

1.1.2 Pelletization of Sol-Gel Urania-Plutonia (R. A. Bradley, W. H. Pechin)

ETR irradiation capsules 43-120 and 43-121 will each contain two pins loaded with $(Pu_{0.20},U_{0.80})O_2$ microspheres by the Sphere-Pac process and two pins loaded with 84% dense sol-gel $(Pu_{0.80},U_{0.80})O_2$ pellets. For both the pellets and microspheres, the O/M must be 1.98 ± 0.01 and the gas release less than 0.10 cm^3/g, preferably less than 0.05 cm^3/g. The preparation of the powder and the fabrication of four batches of pellets were described previously.[1]

The gas release of the pellets from these four batches was extremely high, about 1.0 cm^3/g; therefore, they were unacceptable. Most of those pellets were used in gas release studies described in Section 1.1.3 of this report.

During the past month we fabricated sufficient additional pellets to load the ETR capsules. We used the same fabrication procedures used previously except that we cooled the pellets from 850°C in argon instead of Ar–4% H_2 to prevent the retention of H_2 by the fuel.

Ten ETR pins have been loaded, five with pellets and five by the Sphere-Pac process. The densities of the pellets were 84 ± 1% which is equivalent to a smear density of 81 ± 1% T.D. The smear density of the pins loaded by the Sphere-Pac process was 83 to 84% T.D. These rods are presently being welded and undergoing nondestructive testing.

We have completed the preparation of the powder for the EBR-II pellets and are presently calcining it and performing sinterability tests.

---

[1]R. A. Bradley, "Pelletization of Sol-Gel Urania-Plutonis," Fuel Cycle Technology Monthly Report for Period Ending October 1969.

1.1.3 $(U,Pu)O_2$ Gas Release Studies (W. H. Pechin, R. A. Bradley)

The investigation of retention of H_2 by $(U,Pu)O_2$ pellets during heat treatment has been continued. It was reported last month that a low temperature moisture peak was observed in the furnace effluent upon heating $(U,Pu)O_2$ pellets in CO_2 after cooling in Ar–4% H_2. We attributed this peak to the oxidation of H_2 evolved by the pellets; however, the magnitude of the peak was only great enough to explain about 10% of the gas volume observed in the gas release measurement at 1600°C. We felt that this might be due to incomplete oxidation of the H_2 as it was evolved. To get more complete oxidation of the H_2, we made two runs heating to 400°C in air instead of CO_2. This resulted in a low temperature moisture peak equivalent to 0.17 cm^3/g in one run and 0.22 cm^3/g in the other. These values represent about 25 to 50% of the gas release volume measured on such pellets after cooling in Ar–4% H_2. The increased value observed on heating in air instead of CO_2 indicates that the H_2 was not completely oxidized in the CO_2 and leaves the possibility that it may not be completely oxidized in air; thus we have installed a catalytic unit in the effluent line from the furnace to ensure complete reaction between H_2 and O_2 before the gas reaches the moisture monitor.

1.2 Capsule Fabrication

Fabrication of the EBR-II, Series II unencapsulated fuel rods and the ETR oxide capsules continued.

1.2.1 EBR-II, Series II Unencapsulated Fuel Rods (R. B. Pratt, M. K. Preston)

During 1970 we plan to fabricate 19 unencapsulated fuel rods for a 37-rod subassembly to be inserted in the EBR-II Reactor. Planning, scheduling, design, and procurement have been the principal activities to date.

Fuel Rod Design. — The preliminary design for the fuel rod described last month has been transmitted to the Argonne National Laboratory for review and approval. Approval is expected in the near future.

Raw Material Procurement and Qualification. — Near the end of last month raw material samples were submitted for chemical analysis. To date no results concerning these samples have been received. The urgency of this work is not critical at this time.

Fabrication of Fuel Pellets. — Work is continuing on comminution of tray-dried plutonium shards. Work is also continuing on preparation of fuel pellet and Sphere-Pac specifications. The pellet specs are 50% complete; those for Sphere-Pac are 20% complete.

Fabrication of UO_2 Blanket Pellets. — To date the Ceramic Process group has test sintered some UO_2 pellets. These pellets have been submitted for chemical analysis and gas release determinations. We are currently awaiting the results of these tests. Also, a pressing die was designed. Fabrication of this die is 90% complete.

Fabrication of ThO_2 Insulator Pellets. — During the past month a number of test pellets were pressed and sintered. It was determined that the die being fabricated for pressing the UO_2 blanket pellets will also be suitable for pressing ThO_2 insulator pellets. The ThO_2 test pellets are ready to be submitted for chemical analysis.

Sphere-Pac Activities. — The Chemical Technology Division is currently having good success preparing $(U,Pu)O_2$ microspheres. The critical path presently concerns Sphere-Pac and pellet fabrication activities. Development work on Sphere-Pac loading needs more emphasis in the near future.

Equipment Design. — During fabrication of the fuel rods at least 1 cm^3 of xenon tagging gas must be introduced into each fuel rod. After reviewing methods developed by GE, PNL, ANL, and EBR-II for introducing xenon, work was begun on a method more suitable for our fuel pin design. Using the proposed system, each rod is evacuated, the free volume determined, and then re-evacuated prior to valving a measured amount of xenon into the rod. This action is followed by introduction of a measured amount of helium. The resulting mixture is at a pressure slightly above atmospheric. Gases are introduced through a capillary which is pinched, cut, flattened, and welded. This system appears to be advantageous in that helium and xenon are mixed in the fuel rod. Other systems investigated require the use of long hypodermic needles combined with a system which includes a septum and a mercury or cryogenic pumping system. Another approach uses a premix of helium and xenon. This system has the apparent disadvantage that substantial amounts of costly xenon are lost to the system. Our preliminary design for the ORNL xenon tagging system has been submitted to EBR-II personnel for review and approval. Pressure gages which have long delivery time have been ordered, and other components are being accumulated.

Welding Development and Qualification. — We are presently fabricating development hardware to qualify the proposed welding procedures, for x-ray technique development, and to prepare metallography samples. The welds to be qualified are the: (1) bottom end plug to tube [a cold area weld], (2) xenon tagging tube to top end plug [a cold area weld], (3) top end plug to tube [glove-box weld], and (4) xenon tagging tube closure [glove-box weld]. We will not develop the top end cap weld until we obtain final approval on the proposed fuel rod design.

1.2.2 ETR Mixed Oxide (M. K. Preston)

The next thermal flux irradiation test of mixed oxide fuels is a series of four instrumented capsules for the ETR. The capsules will be double encapsulated with NaK heat transfer bond and thermocouples for monitoring the clad surface temperatures. Fabrication of two capsules with four 3-in. fueled sections in each capsule is under way.

During the past month we have completed the following subassemblies: (1) five each Sphere-Pac fuel pins, (2) five each pellet loaded fuel pins, (3) six bottom capsule subassemblies, and (4) one brazed thermocouple assembly consisting of the top end plug and eight thermocouples brazed in place. Two of the pellet loaded fuel pins will have to be opened and a new end plug welded in place due to porosity in the final closure welds. We have assembled one complete ETR dummy capsule primarily to check out the NaK-44 loading procedures which is scheduled to be done the first week in January.

2. FUEL EVALUATION

(C. M. Cox, T. N. Washburn,
J. M. Leitnaker)

The fuel evaluation work involves both out-of-reactor and in-reactor tests to characterize the fuels of interest and to determine performance limits of the fuels.

2.1 Characterization of Fuels

The development of sol-gel fuel fabrication requires characterization of the material to control the process and to determine which properties are important to irradiation behavior. Characterization requires determining both the chemical composition and the physical properties. Thermodynamic studies contribute to the development of the process for the fuel and aid in predicting fuel performance for both irradiation testing and model studies.

2.2 Irradiation of Fuels

The final evaluation of $(U,Pu)O_2$ fuels will be based upon their irradiation performance. The irradiation testing program is concentrating on comparative tests of three fabrication forms: Sphere-Pac, pellets, and extrusions. The program includes thermal-flux irradiations that permit use of instrumented capsules and achievement of high burnup levels in relatively short times. These tests will provide supplemental information essential to the analysis of the fast-flux irradiation tests, in which the radial fission-rate distribution and cladding damage are more typical of anticipated LMFBR operating conditions. The test program also includes power transient tests to investigate fuel performance under abnormal operating conditions. The development of mathematical models to predict fuel behavior and of computer programs for analyzing fuel performance are integral parts of the irradiation test program.

No progress to report.

2.2.1 Uninstrumented ETR Tests (A. R. Olsen, D. R. Cuneo)

A series of uninstrumented capsules is being irradiated in the X-basket facilities of the Engineering Test Reactor (ETR). Each capsule contains four test rods arranged in tandem. The initial objective of these tests was to investigate the effects of fabrication form with extended burnup on fission-gas release, fission product migration, and fuel swelling. Some capsules are now being irradiated specifically to provide short-cooled irradiated fuel for LMFBR reprocessing studies. The current status of these tests is given in Table 1.

The metallographic examination of capsules 43-103 and 43-115 continued during the past month. Only sections from rod 43-115-3 have not been examined metallographically. The alpha and beta-gamma autoradiographs of selected sections from both 43-103 and 43-115 are scheduled for next month. Until these are available, detailed analysis of the data cannot be completed.

Fuel for capsules 43-117 through 43-119 was scheduled for delivery this month. However, a change in the pellet specifications for Fast Test Reactor fuel was made recently; therefore, delivery of the fuel for these tests is now expected in February. A final capsule design has been developed and hardware has been ordered. Detailed safety analysis calculations will be initiated as soon as the fuel composition is available.

Experiment 43-113 is operating without incident in the ETR.

Table 1. Noninstrumented Thermal Flux Tests of $(U,Pu)O_2$ Fuels

Experiment Number	Fuel		Number of Rods	Peak Burnup (% FIMA)[a]	Peak Linear Heat Rate (w/cm)	Peak Cladding Inner Surface Temperature (C°)	Status December 1969
	Form	Composition					
43-99	Sphere-Pac	$(^{235}U_{0.80},Pu_{0.20})O_{2.00}$	2	1.5[b]	1640[b]	1000	Examined
43-100	Sphere-Pac	$(^{235}U_{0.80},Pu_{0.20})O_{2.00}$	2	1.4[b]	1470[b]	900	Examined
43-103	Sphere-Pac Pellet	$UO_{2.02}$(20% ^{235}U) $UO_{2.00}$(20% ^{235}U)	3 1	5	690	530	Being examined
43-112	Sphere-Pac	$(^{238}U_{0.85},Pu_{0.15})O_{1.97}$ $UO_{2.02}$(20% ^{235}U)	3 1	0.7	500	360	Being examined
43-113	Sphere-Pac	$(^{238}U_{0.85},Pu_{0.15})O_{1.97}$ $UO_{2.02}$(20% ^{235}U)	3 1	10[c]	500[c]	380[c]	In-reactor, ≅ 8.5% FIMA
43-115	Sphere-Pac	$(^{238}U_{0.85},Pu_{0.15})O_{1.97}$ $UO_{2.02}$(20% ^{235}U)	3 1	5[c]	600[c]	460[c]	Being examined
43-116	Sphere-Pac	$(^{238}U_{0.85},Pu_{0.15})O_{1.97}$	4	1.5[c]	600[c]	460[c]	Being examined
43-117 43-118 43-119	Ref. FTR Pellets	$(^{238}U,Pu)O_{1.98}$	4	1.5[d]	600[c]	460[c]	In preparation

[a]FIMA is fissions per initial actinide metal atom.

[b]Rods failed in reactor from overpowering.

[c]These are target design values.

[d]This is an approximate level. Test will be irradiated for two ETR cycles to produce fuel for reprocessing studies.

2.2.2 Instrumented ETR Tests (C. F. Sanders)

Two instrumented ETR capsules are being constructed to investigate the swelling of Sphere-Pac fuels under conditions of high fission-gas retention.

During the past month the fuel pins were loaded, and the capsule assembly will be completed in January 1970.

2.2.3 ORR Instrumented Tests (R. B. Fitts, V. A. DeCarlo, D. R. Cuneo)

The ORR instrumented tests are designed to study the thermal performance of test fuel rods. The first series of tests involves studying the sol-gel-derived $(U,Pu)O_2$ fuels.

The first test, SG-1, was employed to check out the test capsule design and obtain a preliminary look at the thermal performance of sol-gel Sphere-Pac fuel. Both objectives were attained, and the Sphere-Pac fuel thermal performance was found to be generally the same as would have been expected for pellet fuel.

The second test, SG-2, contained Sphere-Pac $(U-20\%\ Pu)O_2$ fuel and was operated at gradually increasing heat generation rates until a fuel central temperature of 1500°C was reached. At this temperature the experiment was removed from the reactor in order to metallographically examine the fuel structure. This examination will provide a characterization of the fuel structure at and below 1500°C for use as a temperature indicator in uninstrumented irradiation tests. Samples for this purpose are awaiting their turn for examination. Detailed analysis of the in-reactor operating data is proceeding.

The third capsule, SG-3, contains one fuel rod of $(U-20\%\ Pu)O_2$ Sphere-Pac fuel at a smear density of 82% of theoretical and a second fuel rod of sol-gel pellet fuel of the same composition and smear density. This experiment will provide a direct comparison of Sphere-Pac and pellet fuel thermal performance to central temperatures of about 2000°C and furnish the structure-temperature relationship at temperatures near 2000°C. This capsule was inserted in the ORR pool-side facility on December 7, 1969 and has operated satisfactorily to a maximum central temperature of 1100°C to date.

2.2.4 Transient Irradiation Tests of Sol-Gel-Derived $(U,Pu)O_2$ Sphere-Pac and Pellet Fuels

(C. M. Cox, D. R. Cuneo, E. J. Manthos)

The second of the two capsules, TR-1 and TR-2, which were subjected to power transients at the TREAT reactor, was returned to Oak Ridge on November 17, 1969. Preliminary test data were reported last month.[1] Postirradiation examinations have confirmed the earlier indication that none of the fuel pins failed.

The empty shipping cask was returned to GE-Vallecitos via Idaho Falls. The inner capsules from TR-1 and TR-2 were removed from the outer capsules without incident except that one of the graphite sleeves in TR-2 was broken during disassembly. Both outer capsules were returned to Building 4508 after the inner capsules were removed. The heater cans were removed from both capsule bodies and inspected; we saw no evidences of damage to either heater can. The thermocouples and heaters were checked for electrical continuity and resistance, and the results were identical to those observed after assembly. The two heater thermocouples that apparently failed after the calibration transient of TR-1 were undamaged, and it appears that the failures may have been caused by a faulty connector either in or out of the capsule. The lower spring assemblies in both capsules were damaged. An Allen head set screw which acted as a spring travel stop was sheared apparently while the capsules were being handled at the reactor site. The sheared set screws were removed, and the two capsules were reassembled. We detected no transferrable contamination on the interior of the heater cans, capsule bodies, or exterior of the capsule bodies.

Both outer capsule interiors were evacuated and purged with argon several times and then filled with argon and sealed. The outer surfaces of the capsule bodies were wrapped with a vapor-phase rust inhibitor paper. The beta-gamma activity of the capsule bodies due to neutron activation was 35 mr/hr at a distance of 2 in. Both capsule bodies were stored on the roof over Room 265 in Building 4508.

Two flux monitor wires were exposed on the exterior of each capsule body during the transients. One wire from each capsule was sectioned into 1-in. lengths and submitted for analysis. The results from each set of wires have been received, and the flux profile from each transient compares favorably with the flux traverse obtained at TREAT with a ^{235}U fission counter.

---

[1] C. M. Cox and E. J. Manthos, "Transient Reactor Tests," LMFBR Fuel Cycle Studies Progress Report for November 1969, No. 9, ORNL-TM-2795, pp. 74–77 (December 1969).

A request was received from PNL to borrow and use the TREAT shipping container for shipment of two of their unirradiated TREAT capsules. Their request was granted, and the empty shipping container has been sent to PNL.

Postirradiation examinations of the inner capsules have been initiated. The inner capsules, containing three fuel pins each, were removed from their outer containment and gamma scanned outside of the hot cells. The beta-gamma activity of these inner capsules was about 200–250 mr/hr at 2 in. for TR-1 and about 300–350 mr/hr for TR-2. Comparing the two, the inner capsule of TR-2 showed considerably greater heating discoloration than that of TR-1.

Both inner capsules have been x-radiographed by Inspection Engineering. Neutron radiographs were taken at TREAT. Some regions of low density and fuel column separation have been noted from these. Gamma scans outside the hot cells showed normal appearances. Gas samples, both from the regions between the inner capsules and their containments and those from the regions above the Na coolant, showed no fission product activities. The Na was melted from the inner capsules and the fuel pin assemblies were removed.

The top and bottom fuel pins of TR-1 and the middle and bottom fuel pins of TR-2 exhibited circumferential grooves near their bottom ends. Discussions with those who handled the pins during fabrication indicate these may have been caused by a collet used to hold them during welding in a glove box.

The six pins are listed here for reference:

TR-1	Descriptions
Top fuel pin	14-35, TR-IC
Middle fuel pin	14-30-1, TR-IB
Bottom fuel pin	14-38, TR-IA

TR-2	Descriptions
Top fuel pin	14-36-2, TR-IIC
Middle fuel pin	14-30, TR-IIB
Bottom fuel pin	14-30, TR-IIA

All the pins from TR-II showed spotty discolorations. The bottom fuel pin shows these spots over most of its length. The spotted region of the middle pin tapers off to a clean appearance at the top of the pin. The top pin has relatively few spots, and they are dark against a clean cladding background, as opposed to light spots zgainst a dark background for the other two pins. The pins from TR-I were found to be much freer of these discolorations. Macro-photographs were taken to record these observations.

Dimensioning and germanium diode gamma scanning (in Bldg. 4501) are currently under way. Sectioning of the fuel pins will be done after consideration of all the nondestructive measurements.

2.2.5 Fast Flux Irradiation Tests (A. R. Olsen, F. J. Homan)

The EBR-II fast flux irradiation tests are designed to approximate conditions to be encountered in a commercial scale Liquid-Metal Fast Breeder Reactor. The objective of these tests is to establish the effects of fuel fabrication form, Sphere-Pac or pellet, and void distribution on the fuel swelling, fuel-cladding mechanical interaction, fission-gas release, and fission product distribution in a $(U,Pu)O_2$ fuel operating at typical heat rates to design burnup levels for a power producing LMFBR.

The Series I encapsulated tests all contain Sphere-Pac $(U,Pu)O_2$ fuel. There has been no change in the status of these tests (3.4% FIMA calculated peak burnup) because of the current scheduled shutdown of the EBR-II. Two of these five capsules are scheduled for removal during January at a peak calculated burnup of 4% FIMA. Approval-in-principle for the continued irradiation of the other three capsules to a burnup level of 10% FIMA has been received. The revised safety analysis for this extended burnup exposure is approximately 95% complete. The fission gas pressure buildup and fuel swelling calculations have been completed. The resulting stress-strain relationships were calculated by the FMØDEL code. In addition, the buildup of fission products and decay activities are being calculated.

The Series II unencapsulated fuel rod design has not yet been approved by the EBR-II project. The status of the fabrication of these pins is described in Section 1.2 of this report.

INTERNAL DISTRIBUTION

1. R. D. Ackley
2. R. E. Adams
3. G. M. Adamson, Jr.
4. L. G. Alexander
5. E. D. Arnold
6. M. J. Bell
7. M. R. Bennett
8. R. L. Bennett
9. R. E. Blanco
10. J. O. Blomeke
11. E. S. Bomar
12. W. D. Bond
13. G. E. Boyd
14. R. A. Bradley
15. R. E. Brooksbank
16. K. B. Brown
17. F. R. Bruce
18. W. D. Burch
19. W. H. Carr
20. W. L. Carter
21. G. I. Cathers
22. J. M. Chandler
23. S. D. Clinton
24. H. E. Cochran
25. C. F. Coleman
26. J. H. Coobs
27. C. M. Cox
28. R. L. Cox
29. D. J. Crouse
30. F. L. Culler, Jr.
31. J. E. Cunningham
32. F. C. Davis
33. W. Davis, Jr.
34. H. G. Duggan
35. J. H. Evans
36. D. E. Ferguson
37. L. M. Ferris
38. B. C. Finney
39. R. B. Fitts
40. J. D. Flynn
41. M. H. Fontana
42. E. J. Frederick
43. J. H. Frye, Jr.
44. W. Fulkerson
45. F. J. Furman
46. H. W. Godbee
47. H. E. Goeller
48. J. H. Goode
49. A. T. Gresky
50. W. R. Grimes
51. W. S. Groenier
52. P. A. Haas
53. R. G. Haire
54. R. L. Hamner
55. W. O. Harms
56. F. E. Harrington
57. C. C. Haws, Jr.
58. M. R. Hill
59. N. W. Hill
60. F. J. Homan
61. D. E. Horner
62. F. J. Hurst
63. A. R. Irvine
64. F. A. Kappelmann
65. P. R. Kasten
66. A. H. Kibbey
67. F. G. Kitts
68. B. B. Klima
69. J. M. Leitnaker
70. C. S. Lisser
71. R. E. Leuze
72. M. H. Lloyd
73. J. T. Long
74. A. L. Lotts
75. R. S. Lowrie
76. H. G. MacPherson
77. R. E. MacPherson, Jr.
78. D. W. Magnuson
79. S. Mann
80. E. J. Manthos
81. C. D. Martin, Jr.
82. J. P. McBride
83. R. W. McClung
84. K. H. McCorkle
85. W. T. McDuffee
86. A. B. Meservey
87. J. G. Moore
88. W. L. Moore
89. L. E. Morse
90. C. A. Mossman
91. J. P. Nichols
92. E. L. Nicholson
93. K. J. Notz
94. C. H. Odom
95. A. R. Olsen
96. J. R. Parrott

97. W. A. Pate
98. P. Patriarca
99. W. L. Pattison
100. W. H. Pechin
101. R. B. Pratt
102. R. H. Rainey
103. J. M. Robbins
104. J. T. Roberts
105. J. D. Rollins
106. A. D. Ryon
107. C. F. Sanders
108. J. M. Schmitt
109. J. L. Scott
110. J. D. Sease
111. L. B. Shappert
112. J. W. Snider
113. W. G. Stockdale
114. W. C. T. Stoddart
115. J. C. Suddath
116. O. K. Tallent
117. R. E. Thoma
118. R. E. Toucey
119. D. B. Trauger
120-121. W. E. Unger
122. V. C. A. Vaughen
123. T. N. Washburn
124. D. C. Watkin
125. C. D. Watson
126. A. M. Weinberg
127. J. R. Weir
128. G. A. West
129. M. E. Whatley
130. W. M. Woods
131. E. I. Wroblewski
132-133. R. G. Wymer
134. O. O. Yarbro
135. H. C. Young
136-137. Central Research Library
138. Document Reference Section
139-148. Laboratory Records
149. Laboratory Records, RC
150. ORNL Patent Office
151. Nuclear Safety Information Center

EXTERNAL DISTRIBUTION

AEC, Washington
152. P. Clark
153. J. Crawford
154. G. W. Cunningham
155. A. Van Echo
156. J. S. Griffo
157. N. Haberman
158. P. A. Halpine
159. J. A. McBride
160-169. W. H. McVey
170. H. Schneider
171-174. J. M. Simmons
175. E. E. Sinclair
176. A. N. Tardiff
177. W. R. Voigt
178. C. E. Weber
179. M. J. Whitman

AEC - ANL, USAEC, 9800 S. Cass Avenue, Argonne, Illinois 60439
180. M. E. Jackson, RDT Senior Site Representative

AEC - Canoga Park Area Office, USAEC, P. O. Box 591, Canoga Park, California 91305
181. C. W. Richards

AEC - Gulf General Atomic, P. O. Box 2325, San Diego, Calif. 92112
182. R. H. Ball, RDT Senior Site Representative

AEC - IDO, P. O. Box 2108, Idaho Falls, Idaho 83401
183. K. K. Kennedy, Idaho Operations Office

AEC - ORNL RDT Site Office
184. D. F. Cope, RDT Senior Site Representative
185. R. L. Philippone

AEC - ORO, Oak Ridge, Tennessee 37830
186-200. DTIE
201. Laboratory and University Division

AEC - Richland Operations Office, USAEC, P. O. Box 550, Richland, Washington 99352
202. W. Devine, Jr., Director, Production Reactor Division
203. P. H. Holsted, RDT Senior Site Representative, PNL
204. J. Morabito, FFTF Project Manager, RDT
205. J. Shirley, FFTF Project Administrator, RL

Allied Chemical Nuclear Products, Inc., Gen. Chem. Div., Box 35, Florham Park, N. J. 07932
206. R. I. Newman
207. E. M. Shank

ANL, 9700 South Cass Avenue, Argonne, Illinois 60439
208. A. Amorosi, LMFBR Program Office
209. Leslie Burris, Jr., Associate Director of Chemical Engineering Division
210. S. Lawroski
211. W. J. Mecham
212. M. Nevitt, Director, Metallurgy Division
213. W. B. Seefeldt
214. C. E. Stevenson
215. R. C. Vogel
216. D. S. Webster

ATCOR, Inc., 5 Westchester Plaza, Elmsford, New York 10523
217. Lois Seulowitz, Technical Librarian

Atlantic Richfield Hanford Co., Attention: Document Control, P. O. Box 250, Richland, Washington 99352
218. W. P. McCue
219. G. C. Oberg
220. Milt Szulinski
221. R. E. Tomlinson

Atomics International, Div. of North American Aviation, Inc., P. O. Box 309, Canoga Park, California 91305
222. R. Aronstein
223-226. Simcha Golan
227. C. A. Trilling

Babcock & Wilcox, Research and Development Div., P. O. Box 1260, Lynchburg, Virginia 24505
228. E. M. Croft
229. E. W. Dewell
230. David Mars

Battelle Pacific Northwest Laboratory, P. O. Box 999, Richland, Washington 99352
231. E. R. Astley
232. D. C. Boyd
233. E. D. Clayton
234. C. R. Cooley
235. Director, PNL
236. E. D. Grazzini
237. D. E. de Halas
238. A. M. Platt
239. R. C. Smith

BNL, Upton, New York 11973
240. E. E. Winche

Combustion Engineering, Inc., Nuclear Power Dept., P. O. Box 500, Windsor, Connecticut 06095
241-242. W. P. Staker

E. I. du Pont de Nemours & Co., Savannah River Laboratory, Aiken, South Carolina 29801
243. L. H. Meyer
244. D. A. Orth
245. E. B. Sheldon

General Electric Company, 283 Brokaw Rd., Santa Clara, Calif. 95050
246. R. G. Barnes
247. A. S. Gibson
248. W. H. Reas

Gulf General Atomic, P. O. Box 608, San Diego, California 92112
249. Stanley Donelson
250. A. J. Goodjohn
251-252. R. H. Graham
253. A. R. Matheson
254. R. E. Norman
255. J. N. Siltanen
256. K. B. Steyer

Idaho Nuclear Corporation, P. O. Box 1845, Idaho Falls, Idaho 83401
257. J. A. Buckham
258. W. J. Maeck

Massachusetts Institute of Technology, Cambridge, Massachusetts 02139
259. Manson Benedict

National Lead Company of Ohio, Cincinnati, Ohio
260. S. Marshall

National Lead, New Projects Dept., 11 Broadway, New York, N. Y. 10000
261. S. H. Brown

Nuclear Fuel Services, Inc., Wheaton, Maryland 20902
262. W. H. Lewis, Vice President

Nuclear Materials and Equipment Corp., Apollo, Pennsylvania 15613
263. C. S. Caldwell
264. W. J. Ross
265. M. Selman

United Nuclear Corp., Grasslands Rd., Elmsford, New York 10523
266. A. Strasser

Westinghouse Electric Corp., P. O. Box 355, Pittsburgh, Pa. 15230
267. E. F. Beckett
268. C. E. Guthrie

Westinghouse Electric Corp., P. O. Box 158, Madison, Pa. 15663
269. Robert Markley
270. W. C. Ritz