CENTRAL RESEARCH LIBRARY
DOCUMENT COLLECTION

OAK RIDGE NATIONAL LABORATORY
operated by
UNION CARBIDE CORPORATION • NUCLEAR DIVISION
for the
U.S. ATOMIC ENERGY COMMISSION

MARTIN MARIETTA ENERGY SYSTEMS LIBRARIES
3 4456 0286737 9

ORNL-TM-3295

cy. 1

COMPUTER PROGRAMS FOR SOME EDDY-CURRENT PROBLEMS - 1970

W. A. Simpson
J. W. Luquire
C. V. Dodd
W. G. Spoerl

OAK RIDGE NATIONAL LABORATORY
CENTRAL RESEARCH LIBRARY
DOCUMENT COLLECTION
LIBRARY LOAN COPY
DO NOT TRANSFER TO ANOTHER PERSON
If you wish someone else to see this document, send in name with document and the library will arrange a loan.

NOTICE This document contains information of a preliminary nature and was prepared primarily for internal use at the Oak Ridge National Laboratory. It is subject to revision or correction and therefore does not represent a final report.

This report was prepared as an account of work sponsored by the United States Government. Neither the United States nor the United States Atomic Energy Commission, nor any of their employees, nor any of their contractors, subcontractors, or their employees, makes any warranty, express or implied, or assumes any legal liability or responsibility for the accuracy, completeness or usefulness of any information, apparatus, product or process disclosed, or represents that its use would not infringe privately owned rights.

ORNL-TM-3295

Contract No. W-7405-eng-26

METALS AND CERAMICS DIVISION

COMPUTER PROGRAMS FOR SOME EDDY-CURRENT PROBLEMS — 1970

W. A. Simpson C. V. Dodd
J. W. Luquire W. G. Spoeri

JUNE 1971

OAK RIDGE NATIONAL LABORATORY
Oak Ridge, Tennessee
operated by
UNION CARBIDE CORPORATION
for the
U.S. ATOMIC ENERGY COMMISSION

MARTIN MARIETTA ENERGY SYSTEMS LIBRARIES

3 4456 0286737 9

CONTENTS

Page

Preface vii

Abstract 1

Introduction 1

Inductance of a Coil in Air 5
Discussion of AIRCO 6
Sample Calculation of AIRCO 8
AIRCO Program 11

Coil Above a Two-Conductor Plane 13
Normalized Coil Impedance 14
Discussion of CLADT 14
Sample Calculation of CLADT 16
CLADT Program 18
Defect in Cladding Material 19
Discussion of DEFEC 19
Sample Calculation of DEFEC 21
DEFEC Program 23
Lattice of Defects in Cladding Material 25
Discussion of DELAT 25
Sample Calculation of DELAT 27
DELAT Program 29
Defect in Base Material 31
Discussion of DEFECB 31
Sample Calculation of DEFECB 33
DEFECB Program 35
Force on a Conductor 37
Discussion of FORCE 37
Sample Calculation of FORCE 38
FORCE Program 39

Coil Above a Three-Conductor Plane 40
Discussion of 3CONDT 40
Sample Calculation of 3CONDT 43
3CONDT Program 44

Reflection-Type Coil Above a Single Conducting Plane 47
Magnitude and Phase of Induced Voltage 47
Discussion of RFLM 47
Sample Calculation of RFLM 49
RFLM Program 51
Normalized Impedances of Reflection-Type Coils 54
Discussion of MREP 54
Sample Calculation of MREP 55
MREP Program 57

Page

Reflection-Type Coil Above a Two-Conductor Plane 60
Magnitude and Phase of Induced Voltage 60
Discussion of RFLCT 60
Sample Calculation of RFLCT 63
RFLCT Program 65
Discussion of CLAD1 67
Sample Calculation of CLAD1 69
CLAD1 Program 71
Magnitude and Phase of Induced Voltage with Lift-Off Set . . 74
Discussion of DISC 74
Sample Calculation of DISC 76
DISC Program 77
Phase of Induced Voltage for a Range of Cladding Thickness Values with Lift-Off Automatically Set 78
Discussion of RFLC 78
Sample Calculation of RFLC 80
RFLC Program 82
Change in Magnitude and Phase of Induced Voltage Due to a Defect in the Cladding Material 85
Discussion of RFDFT 85
Sample Calculation of RFDFT 87
RFDFT Program 89
Change in Magnitude and Phase of Induced Voltage Due to a Lattice of Defects in the Cladding Material 92
Discussion of RFDFL2 92
Sample Calculation of RFDFL2 94
RFDFL2 Program 96
Change in Phase of Induced Voltage Due to a Lattice of Defects in the Cladding Material with Lift-Off Set 99
Discussion of BASREAD 99
Sample Calculation of BASREAD 101
BASREAD Program 103
Change in Magnitude and Phase of Induced Voltage Due to a Defect in the Base Material 105
Discussion of RFDFTB 105
Sample Calculation of RFDFTB 107
RFDFTB Program 109

Reflection-Type Coil Above a Three-Conductor Plane 112
Discussion of 3REFLT 112
Sample Calculation of 3REFLT 115
3REFLT Program 117

Through-Transmission Coils 119
Magnitude and Phase of Induced Voltage 120
Discussion of THRU 120
Sample Calculation of THRU 122
THRU Program 124

Page

Change in Magnitude and Phase of Induced Voltage Due to a Defect in the Plate Between the Coils 126
Discussion of THRUDF 126
Sample Calculation of THRUDF 128
THRUDF Program 130
Discussion of 2THRU 132
Sample Calculation of 2THRU 135
2THRU Program 137

Coil Between Two Conducting Planes 139
Discussion of BTNCO 139
Sample Calculation of BTNCO 142
BTNCO Program 143

Coil Encircling a Two-Conductor Rod 145
Normalized Coil Impedance 146
Discussion of ENCCO 146
Sample Calculation of ENCCO 148
ENCCO Program 150
Defect Sensitivity Factor for a Defect in the Outer Material 155
Discussion of ENDFT 155
Sample Calculation of ENDFT 157
ENDFT Program 159
Defect Sensitivity Factor for a Lattice of Defects in the Outer Material 164
Discussion of ENDFTL 164
Sample Calculation of ENDFTL 166
ENDFTL Program 168
Defect Sensitivity Factor for a Differential Coil System for a Lattice of Defects 174
Discussion of READIN 174
Sample Calculation of READIN 176
READIN Program 177
Defect Sensitivity Factor for a Defect in the Base Material . 179
Discussion of ENDFB 179
Sample Calculation of ENDFB 181
ENDFB Program 183

Coil Inside a Two-Conductor Tube 188
Normalized Coil Impedance 189
Discussion of INNCO 189
Sample Calculation of INNCO 191
INNCO Program 193
Defect Sensitivity Factor for a Defect in the Inner Material 197
Discussion of INDFT 197
Sample Calculation of INDFT 199
INDFT Program 201

Page

Defect Sensitivity Factor for a Lattice of Defects in the Inner Material 206
Discussion of INDFTL 206
Sample Calculation of INDFTL 208
INDFTL Program 210
Defect Sensitivity Factor for a Defect in the Outer Material 216
Discussion of INDFB 216
Sample Calculation of INDFB 217
INDFB Program 219

Eddy-Current Bridge 224
Description of BRIDGE 229
Sample Calculation of BRIDGE 230
BRIDGE Program 240

Phase-Sensitive Eddy-Current Instrument 245
Description of PHASEN 245
Sample Calculation of PHASEN 249
PHASEN Program 253

Accuracy of Calculations 257
Approximation of Functions 258
Discussion of $J_1(x)$ 258
Discussion of $\int_0^x xJ_1(x)dx$ 259
Discussion of $\int_0^x xI_1(x)dx$ 261
Discussion of $\int_0^x xK_1(x)dx$ 263
Discussion of $I_0(Z)$, $I_1(Z)$, $K_0(Z)$, $K_1(Z)$ 266

Step Size 271

Convergence 271

Additional Errors 272

Conclusions 273

Acknowledgment 273

List of Symbols 274

PREFACE

Computer Programs for Some Eddy-Current Problems was presented in its original form in August 1969 as ORNL-TM-2501. Since then a number of modifications have been made to improve the programs, or due to compiler changes on the Megasystems computer. Also, programs have been written for the electromagnetic properties of coils above three conductors and programs have been added that consider some of the properties of the eddy-current instruments used to perform the measurements. The programs in the earlier report are still valid; however, the modifications in this report provide improved efficiency.

COMPUTER PROGRAMS FOR SOME EDDY-CURRENT PROBLEMS – 1970

W. A. Simpson C. V. Dodd
J. W. Luquire[1] W. G. Spoeri

ABSTRACT

This report contains computer programs for solving some eddy-current problems frequently encountered in nondestructive testing. Operating instructions and examples are given for each program. These programs are written in BASIC language and may be used on a time-sharing computer. Various eddy-current tests can be quickly and accurately designed by utilizing these programs.

INTRODUCTION

This report contains computer programs developed to calculate the solutions to the equations derived in a previous report[2] which discusses the applicability of the equations to actual test problems. The programs are written in BASIC language, which is usually used with a time-sharing computer system. While these programs will operate, with a few modifications, on many different computer systems, they were written specifically for the Megasystems,[3] GE-430 BASIC. In most of these programs an optional "LET" has been implemented (i.e., with the present system it is no longer necessary to type "LET" at the beginning of each line). Instructions for running these programs and examples of their use are included with each program. Figure 1 illustrates those cases for which solutions have been obtained. Table 1 lists the various programs written for the specified geometrical configurations.

---

[1]Consultant from The University of Tennessee, Knoxville.

[2]C. V. Dodd, W. E. Deeds, J. W. Luquire, and W. G. Spoeri, Some Eddy-Current Problems and Their Integral Solutions, ORNL-4384 (April 1969).

[3]Megasystems, Inc., 460 Twelfth Avenue, New York, N.Y. 10018

ORNL-DWG 68-7311R

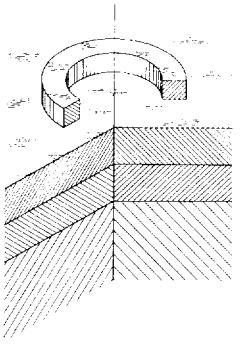

(a) CASE 1: COIL ABOVE THREE-CONDUCTOR PLANE.

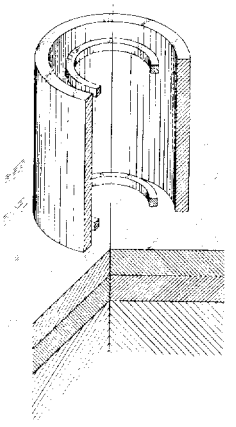

(b) CASE 2: REFLECTION-TYPE COIL (AS USED IN PHASE-SENSITIVE INSTRUMENT) ABOVE A THREE-CONDUCTOR PLANE.

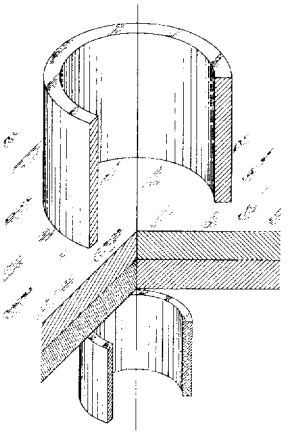

(c) CASE 3: THROUGH-TRANSMISSION COILS (AS USED IN PHASE-SENSITIVE INSTRUMENT.

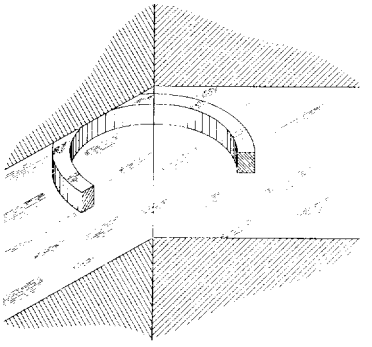

(d) CASE 4: COIL BETWEEN TWO-CONDUCTING PLANES (FOR SPACING MEASUREMENTS.

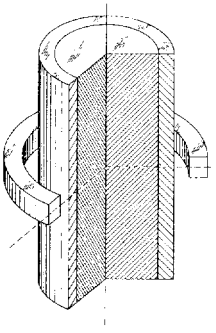

(e) CASE 5: COIL ENCIRCLING TWO CONDUCTOR ROD.

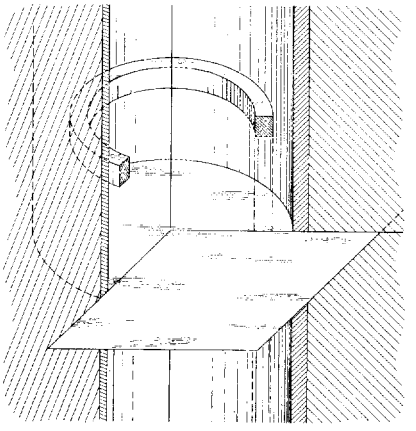

(f) CASE 6: COIL INSIDE TWO CONDUCTOR TUBE.

Fig. 1. Eddy-Current Testing Cases for Which Solutions Have Been Obtained in the Form of Integral Equations.

Table 1. Computer Programs for Solution of Equations for Eddy-Current Test Configurations

Configuration	Program Calculation	Program Name
Coil in air	Coil inductance, resistance, etc.	AIRCO
Coil above a two-conductor plane	Normalized coil impedance	CIADT
	Defect sensitivity factor for a defect in the cladding material	DEFEC
	Defect sensitivity factor for a lattice of defects in the cladding material	DELAT
	Defect sensitivity factor for a defect in the base material	DEFECB
	Net eddy-current force exerted on a conductor	FORCE
Coil above a three-conductor plane	Normalized coil impedance	3CONDT
Reflection-type coil above a single conducting plane	Magnitude and phase of induced voltage on a 3 × 5 lattice	RFLM
	Normalized impedance of coils	MREP
Reflection-type coil above a two-conductor plane	Magnitude and phase of induced voltage	RFLCT
	Normalized impedance of coils	CIAD1
	Phase shift of induced voltage with "lift-off" set	DISC
	Magnitude and phase of induced voltage for a range of cladding thickness values with "lift-off" automatically set	RFLC
	Change in magnitude and phase of induced voltage due to a defect in the cladding material	RFDFT
	Change in magnitude and phase of induced voltage due to lattice of defects in the cladding material	RFDFL2
	Change in phase of induced voltage due to a lattice of defects in the cladding material with the "lift-off" set	BASREAD
	Change in magnitude and phase of induced voltage due to a defect in the base material	RFDFTB
Reflection-type coil above a three-conductor plane	Magnitude and phase of the induced voltage	3REFLT
Through-transmission coils	Magnitude and phase of the induced voltage for a single conducting plate	THRU
	Change in magnitude and phase of induced voltage due to a defect in the plate between the coils	THRUDF
	Magnitude and phase of the induced voltage for a two-layered conductor	2THRU
Coil between two conducting planes	Normalized coil impedance	BTNCO

Table 1 (continued)

Configuration	Program Calculation	Program Name
Coil encircling a two-conductor rod	Normalized coil impedance	ENCCO
	Defect sensitivity factor for a defect in the outer material	ENDFT
	Defect sensitivity factor for a lattice of defects in the outer material	ENDFTL
	Defect sensitivity factor for a differential coil system for a lattice of defects	READIN
	Defect sensitivity factor for a defect in the inner material	ENDFB
Coil inside a two-conductor tube	Normalized coil impedance	INNCO
	Defect sensitivity factor for a defect in the inner material	INDFT
	Defect sensitivity factor for a lattice of defects in the inner material	INDFTL
	Defect sensitivity factor for a defect in the outer material	INDFB
Eddy-current bridge	Effect of drifts in circuit elements on eddy-current bridge measurements	BRIDGE
Phase-sensitive eddy-current instrument	Effect of drifts in circuit elements on measurements performed using the phase-sensitive instrument	PHASEN

Despite the apparent repetition, each of these programs and its respective discussion has been made essentially self-contained, although in some instances more than one program must be run to obtain the desired answer. For example, note that all the coil impedance values are given in terms of normalized impedances. The normalized values of impedances must be multiplied by the magnitude of the coil impedance in air, ωL, to obtain the actual coil impedance. The inductance, L, may be calculated from AIRCO.

The dimensions used in these programs are also normalized with respect to the mean coil radius, $\bar{r}$, and therefore have no units; M is defined as $\bar{r}^2\omega\mu\sigma$ and is also dimensionless, since $2/\omega\mu\sigma$ is the square of the eddy-current skin depth in meter-kilogram-second (mks) units. The value of M may also be calculated by the formula, $M = 5.09397 \times 10^{-7} \left(\frac{\bar{r}^2 f}{\rho}\right)$, where $\bar{r}$ is now expressed in mils, f is the frequency of cycles per second (Hertz), and ρ is the resistivity in microhm-centimeters.

The discussion and example that precede each of the detailed programs presume that the specific program has already been entered into the active computer memory. The accuracy of these programs is discussed in a later section.

INDUCTANCE OF A COIL IN AIR

We here consider the calculation of the inductance in air of a coil of rectangular cross section, as shown in Fig. 2. This is the type of coil that is used in many eddy-current tests. The impedance such a coil will have in air is:

$$Z_{air} = j \cdot 2 \cdot \pi \cdot f \cdot L \ ,$$

where Z is the impedance in ohms, j is the square root of minus one, f is the frequency in Hertz, and L is the inductance in henries. The impedance the coil will have when placed on a metal is $Z = \left| Z_{air} \right| \cdot Z_n$, where Z_n is the normalized impedance, which is calculated from one of the impedance programs. In addition, the integral calculated in the air

ORNL-DWG 68-10309

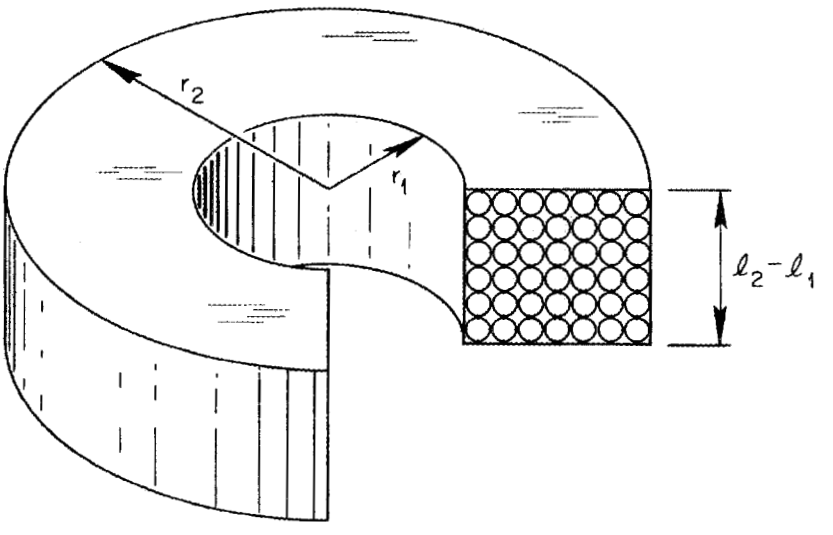

Fig. 2. A Rectangular Cross-Section Coil.

inductance program is also calculated (along with several other integrals) in all the impedance programs. Since this integral is one of the slowest to converge, it can be calculated separately for a coil in air and used in any of the impedance programs for cases with the same relative coil dimensions. The program AIRCO calculates the coil inductance and a "normalization factor" used in impedance calculations. The first normalization factor is used with planar conductors and the second is used with cylindrical conductors.

Discussion of AIRCO

This program is designed to calculate the inductance in air of a coil with rectangular cross section. Such a coil is shown in Fig. 2. In addition, this program will calculate two normalization factors that are used in other programs appearing in this report. To use this program, one must first divide all dimensions by the mean radius of the coil. The results will, of course, be dimensionless and will be referred to as being "normalized."

In the first portion of the program, the computer calculates the two normalization factors and the inductance divided by the product of the square of the number of turns on the coil and the mean coil radius. In order to determine the actual inductance, it is necessary to specify both the number of turns and the mean coil radius (in inches). The latter information is given in line 50 of the program. The number of turns, however, will depend on the wire gage selected and on the number of layers of insulation on the wire. On the other hand, the user may already know the inductance desired, but not the number of turns and wire gage necessary to give this inductance. In order to provide for a wide range of possible uses, the program has been designed to accept as input three numbers specifying the wire gage, number of turns, and desired inductance.

To use this program, one types the following lines into the program. (Note: Parentheses are not typed, but indicate that the appropriate number is to be typed there.)

20 Let R1 = (numerical value of normalized inner coil radius)

30 Let R2 = (numerical value of normalized outer coil radius)

40 Let L = (numerical value of normalized length of coil)

50 Let R3 = (numerical value of mean coil radius, in inches)

60 Let I3 = [number of insulation layers (i.e., 1, 2, 3, or 4)]

The program may now be run.

The print-out by the computer will have the following format:

```
COIL LENGTH IS (L)          R1 = (R1)              R2 = (R2)
        INDUCTANCE/N↑2*R(BAR) = --------

                    NORMALIZATION FACTOR

PLANAR CONDUCTOR --------      CYLINDRICAL CONDUCTOR --------

{SINGLE   }
{DOUBLE   } INSULATION
{TRIPLE   }
{QUADRUPLE}

WHAT IS WIRE GAGE, NUMBER OF TURNS, INDUCTANCE?

?
```

The various symbols enclosed in parentheses indicate that the numerical value of the symbol will be printed. The curly bracket indicates that the statement printed depends on the value of I3 in line 60.

There are four options that the user now has, depending on what he wishes to calculate and what is already known. They are, with "O" denoting unknown:

	WIRE GAGE	NUMBER OF TURNS	INDUCTANCE
1.	O	O	X

Here the program will calculate the number of turns necessary to give the specified inductance, the wire gage, number of turns per layer, number of layers, the actual inductance using the calculated number of turns, coil dc resistance, and Q at 1 kHz.

2.	O	X	O

When the number of turns is specified, as here, the program calculates the wire gage, number of turns per layer, number of layers, inductance, coil dc resistance, and Q at 1 kHz.

	WIRE GAGE	NUMBER OF TURNS	INDUCTANCE
3.	X	X	0

Here the program calculates the inductance, coil dc resistance, Q at 1 kHz, and the calculated number of turns that will fit on the coil, and finally, when the wire gage is specified:

4.	X	0	0

the computer calculates the number of turns, turns per layer, number of layers, inductance, coil dc resistance, and Q at 1 kHz.

After the question mark appears, the user types in the data in the order given above, with a comma between each value. The known values are typed in, and zeros are typed for the unknowns.

The inductance is in henries and the gage is American Wire Gage or Brown and Sharpe Wire Gage.

The example below is presented as an additional aid to those who wish to use this program.

Sample Calculation of AIRCO

Suppose that we wish to know the inductance of a coil 0.250 in. long with inner and outer radii of 0.125 and 0.375 in., respectively. We shall assume that the coil is to be wound with wire having a single layer of insulation.

First, we determine the mean coil radius to be 0.250 in., so that

Normalized inner coil radius = 0.125/0.250 = 0.5

Normalized outer coil radius = 0.375/0.250 = 1.5

Normalized coil length = 0.250/0.250 = 1

This information is now typed into the computer in the following format:

```
20 Let R1 = 0.5
30 Let R2 = 1.5
40 Let L  = 1
```

```
50 Let R3 = 0.250
60 Let I3 = 1
```

The program may now be run.

It should be noted that the program assumes the coil to be wound with copper wire. If this is not the case, the program may be altered by multiplying the entire expression in line 1340 by the ratio of the resistivity of the metal used to that of copper.

The program is now run with the following results:

```
COIL LENGTH IS 1          R1 = .5                    R2 = 1.5
            INDUCTANCE/N↑2*R(BAR) = 1.2665E-6

                        NORMALIZATION FACTOR
PLANAR CONDUCTOR .160405  CYLINDRICAL CONDUCTOR .503926
SINGLE INSULATION
WHAT IS WIRE GAGE, NUMBER OF TURNS, INDUCTANCE
?
```

Suppose the inductance is to be 200 μH and we wish the computer to calculate wire gage and number of turns. After the question mark we type:

```
? 0, 0, 2E-4
```

The computer then prints:

```
MEAN COIL RADIUS .25 INCHES
EXACT NUMBER OF TURNS NEEDED 157.698
GAGE #  #/LAYER  LAYERS INDUCTANCE RESISTANCE Q AT 1 KHZ
 24  121  11  11   1.17747E-4   .406886   1.81827
 25  169  13  13   2.29696E-4   .71663    2.0139
```

Thus the closest we can come is about 230 μH, using 169 turns of #25 wire. A closer value will require changing the coil dimensions.

Suppose instead that 1000 turns of wire are to be used and that we wish the computer to calculate the wire gage and inductance. After the question mark we type:

```
? 0, 1E3, 0
```

The computer then prints:

```
MEAN COIL RADIUS  .25 INCHES
NUMBER OF TURNS SPECIFIED 1000
GAGE #   #/LAYER  LAYERS INDUCTANCE RESISTANCE Q AT 1 KHZ
 32  784   28  28  4.94323E-3  16.8554  1.84268
 33  961   31  31  7.42721E-3  26.0531  1.79121
 34  1225  35  35  1.20684E-2  41.8777  1.81071
```

On the given coil form, 961 turns is the closest that we can come, using #33 wire. The inductance is about 7.43 mH.

As another example, suppose that the coil has been wound with 480 turns of #30 wire and we wish the computer to calculate the inductance. After the question mark we type:

```
? 30, 480, 0
```

The computer then prints:

```
MEAN COIL RADIUS  .25 INCHES
INDUCTANCE  1.85294E-3  RESISTANCE 6.4899 Q AT 1 KHZ 1.79392
ACTUAL NUMBER OF TURNS 480 CALCULATED NUMBER 484
```

The inductance was calculated using the specified (actual) number of turns. The last line of the print-out tells us that, with perfect winding techniques, we could have put 484 turns on the coil.

Finally, suppose that the coil is to be wound with #36 wire and we wish the computer to calculate the number of turns and the inductance. After the question mark we type:

```
? 36, 0, 0
```

The computer then types:

```
MEAN COIL RADIUS  .25 INCHES
GAGE #   #/LAYER  LAYERS   INDUCTANCE   RESISTANCE   Q AT 1 KHZ
 36  1936 44  44   3.01432E-2            105.237       1.7997
```

We see that 1936 turns are required and that the inductance is about 30 mH.

AIRCO Program

```
10 REM        AIRCØ       VERSIØN 12/17/69
20 R1=.87562
30 R2=1.12438
40L=.87065
50 R3=.201
60 I3=4
70 PRINT"CØIL LENGTH IS";L,"R1=";R1,"R2=";R2
80 LETS1=1E-2
90 LETS2=1
100 LETE1=.1
110 LET I6=0
120 LET B1=0
130 LET B2 =S2
140 LETI9=I6
150 FØRX=B1+S1/2 TØ B2 STEP S1
160 LET Z=R2*X
170 LET Q1=R2
180 GØSUB 1000
190 LET I2=F2
200 LET Z=R1*X
210 LET Q1=R1
220 GØSUB 1000
230 LET I1=F2
240 IF X*L>.005 THEN 270
250 LETA1=.5*X*L↑2-X↑2*L↑3/6
260 GØ TØ 280
270 LET A1=L+(EXP(-X*L)-1)/X
280 LET I6=I6+S1*(I2-I1)↑2*A1/X
290 NEXT X
300 IF(I6-I9)/I6>E1 THEN 1220
310 READS1,S2,E1
320 IF E1>0THENI220
330DATA2E-2,2,1E-2,5E-2,5,1E-3,1E-1,10,1E-4,.5,50,1E-5,2,200,1E-6,1,1,-1
340 LET Q6=8E-7*PI↑2*I6/(L*(R2-R1))↑2
350 PRINT"              INDUCTANCE/N↑2*R(BAR)=";Q6
360 PRINT
370 PRINT" ","          NØRMALIZATIØN FACTØR"
380 PRINT"PLANAR CØNDUCTØR";I6;"CYLINDRICAL CØNDUCTØR";PI*I6
390IF R3=0 THEN 1470
400 ØN I3 GØ TØ 410,470,530,590
410 C1=.460655
420 C2=.151396
430 C3=9.802228E-2
440 C4=2.56791E-2
450 PRINT "SINGLE INSULATIØN"
460 GØ TØ 640
470 C1=.891268
480 C2=.43444
490C3=.17864
500C4=5.47423E-2
510 PRINT"DØUBLE INSULATIØN"
520 GØ TØ 640
530 C1=1.08488
540 C2=.146042
550 C3=3*9.802228E-2
560 C4=3*2.56791E-2
570PRINT"TRIPLE INSULATIØN"
```

```
580 GØ TØ 640
590 C1=1.48545
600 C2=.290734
610 C3=4*9.802228E-2
620 C4=4*2.56791E-2
630 PRINT"QUADRUPLE INSULATIØN"
640 PRINT "WHAT IS WIRE GAGE,NUMBER ØF TURNS,INDUCTANCE"
650 INPUT G3,N3,L3
660 PRINT "MEAN CØIL RADIUS";R3;"INCHES"
670 IFL3=0THEN830
680 GØ SUB 1250
690PRINT"EXACT NUMBER ØF TURNS NEEDED";N4
700PRINT"GAGE #  #/LAYER  LAYERS INDUCTANCE RESISTANCE Q AT 1HZ"
710 PRINTG3;N3;N1;N2;L3;R5;Q3
720IFN4<N3THEN780
730 G3=G3+1
740 GØ SUB 1340
750PRINTG3;N3;N1;N2;L3;R5;Q3
760IFN3>N4THEN1470
770GØTØ730
780G3=G3-1
790GØ SUB 1340
800PRINTG3;N3;N1;N2;L3;R5;Q3
810IFN4>N3THEN1470
820GØTØ780
830 IFG3>0THEN880
840 N4=N3
850 GØ SUB 1260
860PRINT"NUMBER ØF TURNS SPECIFIED";N4
870 GØ TØ 700
880 IF N3>0THEN 930
890 GØ SUB 1340
900PRINT"GAGE   #  #/LAYER  LAYERS","INDUCTANCE","RESISTANCE","Q @1KHZ"
910PRINTG3;N3;N1;N2;L3,R5,Q3
920GØ TØ 1470
930N4=N3
940 R4=(.9989+.017*(G3/10-1))*10↑(G3/10-4)
950 GØ SUB 1430
960PRINT"INDUCTANCE";L3;"RESISTANCE";R5;"Q AT 1 KHZ";Q3
970 GØ SUB 1340
980PRINT"ACTUAL NUMBER ØF TURNS";N4;"CALCULATED NUMBER";N3
990 GØ TØ 1470
1000 IFZ>5THEN 1090
1010 LETL5=INT(2*Z)+3
1020 LETF1=.5*Q1*Q1*Z
1030 LET F2=F1/3
1040 FØRN=1TØL5
1050 LETF1=-F1*.250*Z*Z/(N*N+N)
1060 LETF2=F2+F1/(2*N+3)
1070 NEXTN
1080 GØTØ 1210
1090 IF Z>30 THEN 1160
1100 LET Q1=(((-188.1357/Z+109.1142)/Z-23.79333)/Z+2.050931)/Z
1110 LET Q1=((Q1-.1730503)/Z+.7034845)/Z-.064109E-3
1120 LET Q2=(((-5.817517/Z+2.105874)/Z-.6896196)/Z+.4952024)/Z
1130 LET Q2=(Q2-.187344E-2)/Z+.7979095
1140 LET F2=(1-SQR(Z)*(Q2*CØS(Z-PI/4)-Q1*SIN(Z-PI/4)))/(X*X)
1150 GØ TØ 1210
1160 LET P3=1/(Z*Z)
1170 LETP1=Z*(-1+P3*(-.5546875+2.48062114*P3))
1180 LETP2=.875+P3*(-.93457031+8.98975114*P3)
```

```
1190 LETF2=1+.79788456*(P1*CØS(Z-.78539816)+P2*SIN(Z-.78539816))/SQR(Z)
1200 LETF2=F2/(X*X)
1210 RETURN
1220 LETB1=B2
1230 LET B2=B2+S2
1240 GØ TØ 140
1250N4=SQR(L3/(R3*.0254*Q6))
1260 D3=R3*.95*SQR((R2-R1)*L/N4)
1270R4=1.0371E-5/(D3*D3)
1280 Q=40
1290G3=40+10*(LØG(R4)-LØG(.9989+.017*(Q/10-1)))/2.302585093
1300 IF ABS(Q-G3)<1E-4 THEN 1330
1310 Q=G3
1320 GØ TØ 1290
1330 G3=INT(G3)
1340R4=(.9989+.017*(G3/10-1))*10↑(G3/10-4)
1350D3=SQR(1.0371E-5/R4)
1360 IFG3>40 THEN 1390
1370 I3=(C1*LØG(D3*1000)-C2)*1E-3
1380 GØ TØ 1400
1390 I3=(C3*D3*1000+C4)*1E-3
1400 N1=INT(L*R3/(D3+I3))
1410 N2=INT((R2-R1)*R3/(D3+I3))
1420N3=N1*N2
1430 R5=N3*R3*R4*2*PI/12
1440L3=N3*N3*R3*.0254*Q6
1450Q3=2000*PI*L3/R5
1460 RETURN
1470 END
```

COIL ABOVE A TWO-CONDUCTOR PLANE

The case of a single coil above one conductor clad on another, as shown in Fig. 3, is typical of many eddy-current tests. Many impedance-bridge eddy-current instruments use this type of coil. In addition, this general case will reduce to a number of simpler cases. The programs in this section will calculate the normalized coil impedance (CLADT), the sensitivity of a single defect in the cladding material (DEFEC), the sensitivity of a defect at any point on a lattice in the cladding material (DELAT), the sensitivity factor for a defect in the base material (DEFECB), and the net eddy-current force exerted on the conductor (FORCE).

The impedance program can be used to study the effect on normalized coil impedance of variations in the thickness of the cladding and the conductivity and permeability of the cladding and base materials. In addition, we may take the conductivity of the base material to be zero and obtain the case of a coil above a plate.

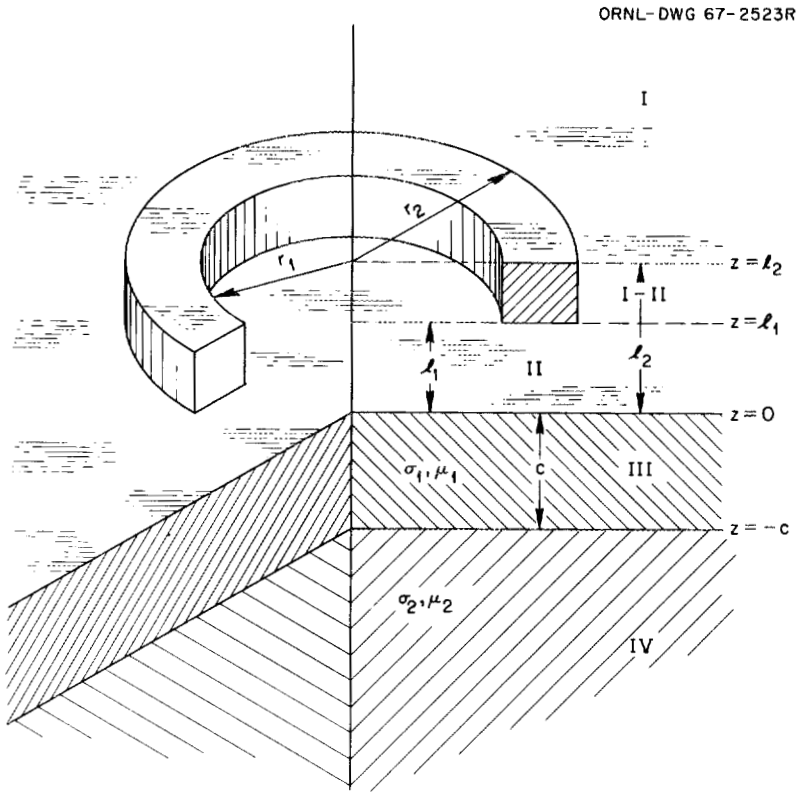

Fig. 3. A Coil of Rectangular Cross Section Above a Two-Conductor Plane.

The defect programs can be used to study the change in normalized coil impedance due to the presence of a defect. We shall call any discontinuity in the electromagnetic properties of the material a defect. In addition, the lattice program can be used to study the effects of a defect located at any point in a lattice. From these programs, we can optimize the effectiveness of a coil in detecting defects.

Normalized Coil Impedance

Discussion of CLADT

This program is designed to calculate the normalized impedance of a coil with rectangular cross section above a conductor consisting of two layers, which may be of different types of material (see Fig. 3).

To use this program, one must first divide all dimensions by the mean radius of the coil. These results will, of course, be dimensionless and will be referred to as being "normalized." The product of the

angular frequency of the driving current, the permeability, the conductivity, and the square of the mean radius of the coil must be calculated for each conductor. Let this product be denoted by $\omega\mu_1\sigma_1\overline{r}^2$ for the upper layer and by $\omega\mu_2\sigma_2\overline{r}^2$ for the lower layer.

Once these calculations have been made, one need only type the following lines into the program. (Note: Parentheses are not typed.)

```
20 LET R1 = (numerical value of normalized inner coil radius)
30 LET R2 = (numerical value of normalized outer coil radius)
40 LET L1 = (numerical value of normalized lift-off)
50 LET L2 = (numerical value of lift-off plus normalized coil length)
60 LET M1 = (numerical value of ωμ1σ1r̄²)
```

Note: If the conductivity of the upper conductor is zero, one must type two additional lines:

```
320 LET X1 = X
330 LET Y1 = 0
70  LET U1 = (numerical value of relative permeability of upper
              conductor)
80  LET M2 = (numerical value of ωμ2σ2r̄²)
```

Note: If the conductivity of the lower conductor is zero, one must type two additional lines:

```
350 LET X2 = X
360 LET Y2 = 0
90  LET U2 = (numerical value of relative permeability of lower
              conductor)
100 LET C  = (numerical value of normalized thickness of upper
              conductor)
```

The program may now be run.

The print-out by the computer will have the following format:

```
R1 = (R1)          R2 = (R2)          L1 = (L1)    L2 = (L2)
CLAD = (C),  M1 = (M1),   U1 = (U1),  M2 = (M2),   U2 = (U2)
X                  AIR VALUE          REAL PART        IMAG PART
5.                 ------             ------           ------
10                 ------             ------           ------
15                 ------             ------           ------
20                 ------             ------           ------
40                 ------             ------           ------
 NORMALIZED IMAG PART  ------  NORMALIZED REAL PART  ------
```

The various symbols enclosed in parentheses are used to indicate that the numerical value of the symbol will be printed. The four columns, headed "X," "AIR VALUE," "REAL PART," and "IMAG PART," are the upper limit of the numerical integration being performed by the computer, the value of the integral in the absence of the conductors, the real part of the integral in the presence of the conductors, and the imaginary part of the integral in the presence of the conductors, respectively. These appear principally to allow one to inspect the convergence of the integration. The last line is the normalized impedance of the coil in the presence of the conductors.

The example below is presented for additional aid to those who wish to use this program.

Sample Calculation of CLADT

Suppose that we wish to know the normalized impedance of a coil 0.250 in. long and with inner and outer radii of 0.125 and 0.375 in., respectively, due to the presence of 0.020 in. of copper clad on an aluminum conductor of effectively infinite thickness (at least four-coil diameters or skin depths, whichever is smaller). We shall assume the driving frequency to be 5 kHz and the lift-off to be 0.005 in.

First, we determine the mean coil radius to be 0.250 in., so that

Normalized radius of inner coil = 0.125/0.250 = 0.5

Normalized radius of outer coil = 0.375/0.250 = 1.5

Normalized lift-off = 0.005/0.250 = 0.02

Normalized coil length = 0.250/0.250 = 1

Normalized thickness of copper = 0.020/0.250 = 0.08

Furthermore,

Angular frequency of driving current = $2\pi \times 5000\ \text{sec}^{-1}$

Permeability of <u>both</u> conductors = $4\pi \times 10^{-7}$ h/m

Relative permeability of <u>both</u> conductors = 1

Conductivity of copper = 5.77×10^{7} mhos/m

Conductivity of aluminum = 2.86×10^{7} mhos/m

Thus,

$$\omega\mu_1\sigma_1\bar{r}^2 = 91.91$$
$$\omega\mu_2\sigma_2\bar{r}^2 = 45.48$$

This information is now typed into the program; that is, one types

```
20 LET R1 = 0.5
30 LET R2 = 1.5
40 LET L1 = 0.02
50 LET L2 = 1.02
60 LET M1 = 91.91
70 LET U1 = 1
80 LET M2 = 45.48
90 LET U2 = 1
100 LET C = 0.08
```

The program is now run with the following results:

```
R1 = 0.5        R2 = 1.5          L1 = 0.2E-01      L2 = 1.02
CLAD = 0.08    ,M1 = 91.91    ,U1 = 1    ,M2 = 45.48    ,U2 = 1
X                AIR VALUE         REAL PART        IMAG PART
 5               0.1592323         0.107332        -0.118106E-01
 10              0.1602305         0.1083125       -0.118325E-01
 15              0.1603371         0.108419        -0.11833E-01
 20              0.1603754         0.1084573       -0.11833E-01
 40              0.1604008         0.1084826       -0.11833E-01
NORMALIZED IMAG PART 0.6763225  NORMALIZED REAL PART 0.0737719
```

From this, we see that the normalized impedance of the coil is

$$Z_n = 0.0737719 + j\ 0.6763225\ .$$

CLADT Program

```
10 REM          CLADT           VERSIØN         07/08/68
20 LET R1=.8333
30 LET R2=1.1667
40 LET L1=.0476
50 LET L2=.3809
60 LET M1=77.05
70 LET U1=1
80 LET M2=40
90 LET U2=1
100 LET C=.05
110 PRINT "R1=";R1,"R2=";R2,"L1=";L1,"L2=";L2
120PRINT"CLAD=";C;",";"M1=";M1;",";"U1=";U1;",";"M2=";M2;",";"U2=";U2
130 PRINT "X", "AIR VALUE", "REAL PART", "IMAG PART"
140 LET S1=1E-2
150 LET S2=5
160 LET I6=0
170 LET I7=0
180 LET I8=0
190 LET I9 =0
200 LET B1=0
210 LET B2 =S2
220 FØR X = B1 +S1/2 TØ B2 STEP S1
230 LET Z=R2*X
240 LET Q1=R2
250 GØSUB 780
260 LET I2=F2
270 LET Z=R1*X
280 LET Q1=R1
290 GØSUB 780
300 LET I1=F2
310 LET S3=S1*(I2-I1)↑2/X
320 LET X1=.707107*(SQR(SQR(X*X*X*X+M1*M1)+X*X))/U1
330 LET Y1=.707107*(SQR(SQR(X*X*X*X+M1*M1)-X*X))/U1
340 IF X1*C*U1>15 THEN 490
350 LET X2=.707107*(SQR(SQR(X*X*X*X+M2*M2)+X*X))/U2
360 LET Y2=.707107*(SQR(SQR(X*X*X*X+M2*M2)-X*X))/U2
370 LET X3=EXP(2*X1*C*U1)
380 LET Y3=CØS(2*Y1*C*U1)
390 LET Y4=SIN(2*Y1*C*U1)
400 LET A6=(X-X1)*(X1+X2)+Y1*(Y1+Y2)
410 LET A7=(X-X1)*(Y1+Y2)-Y1*(X1+X2)
420 LETA5=(X+X1)*(X1-X2)-Y1*(Y1-Y2)+(A6*Y3-A7*Y4)*X3
430 LET B5=Y1*(X1-X2)+(X+X1)*(Y1-Y2)+(A7*Y3+A6*Y4)*X3
440 LET C6=(X+X1)*(X1+X2)-Y1*(Y1+Y2)
450 LET C7=Y1*(X1+X2)+(X+X1)*(Y1+Y2)
460 LET C5=(X-X1)*(X1-X2)+Y1*(Y1-Y2)+(C6*Y3-C7*Y4)*X3
470 LET D5=(X-X1)*(Y1-Y2)-Y1*(X1-X2)+(C7*Y3+C6*Y4)*X3
480 GØ TØ 530
490 LET A5 =X-X1
500 LET B5=-Y1
510 LET C5=X+X1
520 LET D5=Y1
530 LET K1=(A5*C5+B5*D5)/(C5*C5+D5*D5)
540 LET K2=(C5*B5-A5*D5)/(C5*C5+D5*D5)
550 IF X*L2>30 THEN 590
560 LET G=EXP(-2*X*L1)+EXP(-2*X*L2)-2*EXP(-X*(L1+L2))
```

```
570 LETG3=EXP(-X*(L2-L1))-1
580 GØ TØ 610
590 LET G=EXP(-X*L1)
600 LET G3=-1
610 LET I6=I6+S3*G*K1/(2*X)
620 LET I8=I8+S3*G*K2/(2*X)
630 LET I9=I9+S3*(G3/X+L2-L1)
640 NEXT X
650 LETB1=B2
660 LET B2=B2+S2
670 LET Q3=X+S1/2
680 LET I7=I9+I6
690 PRINT Q3,I9,I7,I8
700 IF X < 3 THEN 220
710 LET S1=5E-2
720 IF X<10 THEN 220
730 LET S1=.1
740LETS2=20
750 IF X<35 THEN 220
760 PRINT "NØRMALIZED IMAG PART";I7/I9,"NØRMALIZED REAL PART";-I8/I9
770 GØTØ 930
780 IF Z>5 THEN870
790 LETL5=INT(2*Z)+3
800 LETF1=.5*Q1*Q1*Z
810 LET F2=F1/3
820 FØRN=1TØL5
830 LETF1=-F1*.250*Z*Z/(N*N+N)
840 LETF2=F2+F1/(2*N+3)
850 NEXTN
860 GØTØ 920
870 LET Q1=(((-188.1357/Z+109.1142)/Z-23.79333)/Z+2.050931)/Z
880 LET Q1=((Q1-.1730503)/Z+.7034845)/Z-.064109E-3
890 LET Q2=(((-5.817517/Z+2.105874)/Z-.6896196)/Z+.4952024)/Z
900 LET Q2=(Q2-.187344E-2)/Z+.7979095
910 LET F2=(1-SQR(Z)*(Q2*CØS(Z-PI/4)-Q1*SIN(Z-PI/4)))/(X*X)
920 RETURN
930 END
```

Defect in Cladding Material

Discussion of DEFEC

This program is designed to calculate the defect sensitivity factor for a coil with rectangular cross section above a conductor consisting of two layers, which may be of different types of material. For this program, the defect must be located in the upper layer, which is labeled III in Fig. 3, p. 14.

To use this program, one must first divide all dimensions by the mean radius of the coil. The results will, of course, be dimensionless and will be referred to as being "normalized." The product of the angular frequency of the driving current, the permeability, the conductivity,

and the square of the mean radius of the coil must be calculated for each conductor. Let this product be denoted by $\omega\mu_1\sigma_1\overline{r}^2$ for the upper layer and by $\omega\mu_2\sigma_2\overline{r}^2$ for the lower one.

Once these calculations have been made, one need only type the following lines into the program. (Note: Parentheses should not be typed.)

20 LET R1 = (numerical value of normalized inner coil radius)

30 LET R2 = (numerical value of normalized outer coil radius)

40 LET L1 = (numerical value of normalized lift-off)

50 LET L2 = (numerical value of normalized lift-off plus normalized coil length)

60 LET M1 = (numerical value of $\omega\mu_1\sigma_1\overline{r}^2$)

70 LET M2 = (numerical value of $\omega\mu_2\sigma_2\overline{r}^2$)

Note: If the conductivity of the lower conductor is zero, one must type two additional lines:

380 LET X2 = X

390 LET Y2 = 0

80 LET C = (numerical value of normalized thickness of upper conductor)

90 LET R = (numerical value of normalized R position coordinate of defect)

100 LET Z1 = (numerical value of normalized Z position coordinate of defect)

110 LET I9 = (numerical value of normalization factor)

Note: This value may be obtained with the aid of AIRCO simply by placing the appropriate coil dimensions in that program.

The program may now be run.

The print-out by the computer will have the following format:

```
R1 = (R1)        R2 = (R2)        L1 = (L1)        L2 = (L2)
CLAD THICKNESS IS (C)             M1 = (M1)        M2 = (M2)
DEFECT IS LOCATED AT (R,Z) = (R),  (Z1)
X                MAGNITUDE        PHASE
5                ------           ------
10               ------           ------
15               ------           ------
20               ------           ------
25               ------           ------
30               ------           ------
35               ------           ------
```

The various symbols enclosed in parentheses are used here to indicate that the numerical value of the symbol will be printed. The three columns, headed "X," "MAGNITUDE," and "PHASE" are the upper limit of the numerical integration being performed by the computer, the magnitude of the defect sensitivity factor, and the phase of the defect sensitivity factor, respectively. These appear principally to allow one to inspect the convergence of the integration. The magnitude and phase values for X = 35 are considered to be correct, since the integrations in most cases converge sufficiently well for this value of X.

The example below is presented for additional aid to those who wish to use this program.

Sample Calculation of DEFEC

Suppose that we wish to know the defect sensitivity factor for a coil 0.250 in. long with inner and outer radii of 0.125 and 0.375 in., respectively, above 0.020 in. of copper clad on an aluminum conductor of effectively infinite thickness (at least four coil diameters or skin depths, whichever is smaller). Let us further suppose that we are interested in the defect sensitivity factor for the case in which the defect is located 0.010 in. below the surface of the copper, 0.250 in. from the coil axis. We shall assume the driving frequency to be 5 kHz and the lift-off to be 0.005 in.

First, we determine the mean coil radius to be 0.250 in., so that

Normalized inner coil radius = 0.125/0.250 = 0.5

Normalized outer coil radius = 0.375/0.250 = 1.5

Normalized lift-off = 0.005/0.250 = 0.02

Normalized coil length = 0.250/0.250 = 1

Normalized thickness of copper = 0.020/0.250 = 0.08

Normalized R position of defect = 0.250/0.250 = 1

Normalized Z position of defect = 0.010/0.250 = 0.04

Furthermore,

Angular frequency of driving current = $2\pi \times 5000$ sec^{-1}

Permeability of both conductors = $4\pi \times 10^{-7}$ h/m

Conductivity of copper = 5.77×10^{7} mhos/m

Conductivity of aluminum = 2.86×10^{7} mhos/m

Thus,

$$\omega\mu_1\sigma_1\overline{r}^2 = 91.91$$

$$\omega\mu_2\sigma_2\overline{r}^2 = 45.48$$

At this point, one determines the normalization factor by placing the normalized coil dimensions in AIRCO and running that program. It is worth noting that the normalization factor is independent of all variables except the coil dimensions. This factor is the first normalization factor in the print-out of AIRCO and for the case in point is found to be 0.1604008. The remaining procedure is quite simple.

The above information is now typed into the program as follows:

```
20 LET R1 = 0.5
30 LET R2 = 1.5
40 LET L1 = 0.02
50 LET L2 = 1.02
60 LET M1 = 91.91
70 LET M2 = 45.48
80 LET C = 0.08
90 LET R = 1
100 LET Z1 = -0.04
110 LET I9 = 0.1604008
```

The program is now run with the following results:

```
R1 = .5          R2 = 1.5          L1 = .02          L2 = 1.02
CLAD THICKNESS IS  .08             M1 = 91.91        M2 = 45.48
DEFECT IS LOCATED AT (R,Z) = 1  ,-.04
X                MAGNITUDE         PHASE
 5.               .157671          -1.96004
 10.              .159277          -1.9668
 15.              .158621          -1.96982
 20.              .159061          -1.967
 25.              .158876          -1.96833
 30.              .158929          -1.96793
 35.              .15892           -1.96799
```

From this, we see that the defect sensitivity factor is 0.15892 exp(−j 1.96799). To obtain the change in normalized impedance, we multiply the defect sensitivity factor by the product of the defect volume and the shape and orientation factor. Note that the defect volume must be calculated from dimensions which are normalized by the mean radius of the coil.

DEFEC Program

```
10 REM          DEFEC           VERSIØN        10/06/70
20 LET R1=.5
30 LET R2=1.5
40 LET L1=.02
50 LET L2=1.02
60 LET M1=91.91
70 LET M2=45.48
80 LET C=.08
90 LET R=1
100 LET Z1=-.04
110 LET I9=.1604008
120 PRINT "R1=";R1,"R2=";R2,"L1=";L1,"L2=";L2
130 PRINT "CLAD THICKNESS IS ";C,"M1=";M1,"M2=";M2
140 PRINT "DEFECT IS LØCATED AT (R,Z)=";R;",";Z1
150 PRINT "X", "MAGNITUDE" , "PHASE"
160 LET S1=1E-2
170 LET S2=5
180 LET I6=0
190 LET I8=0
200 LET B1=0
210 LET B2=S2
220 FØR X=B1 +S1/2 TØ B2 STEP S1
230 LET Z=R2*X
240 LET Q1=R2
250 GØSUB 780
260 LET I2=F2
270 LET Z=R1*X
280 LET Q1=R1
290 GØSUB 780
300 LET I1=F2
310 LET I3=I2-I1
320 LET Z=X*R
```

```
330 GØSUB 930
340 LETS3=(I2-I1)*J1*S1*(EXP(-X*L1)-EXP(-X*L2))
350 LET X1=.707107*SQR(SQR(X*X*X*X+M1*M1)+X*X)
360 LET Y1=.707107*SQR(SQR(X*X*X*X+M1*M1)-X*X)
370 IFX1*C>15THEN560
380 LET X2=.707107*SQR(SQR(X*X*X*X+M2*M2)+X*X)
390 LET Y2=.707107*SQR(SQR(X*X*X*X+M2*M2)-X*X)
400 LET X3=EXP(2*X1*C)
410 LET Y3=CØS(2*Y1*C)
420 LET Y4=SIN(2*Y1*C)
430 LET X5=X1+X2
440 LET X6=X1-X2
450 LET Y5=Y1+Y2
460 LET Y6=Y1-Y2
470 LETA5=(X5*CØS(Y1*(2*C+Z1))-Y5*SIN(Y1*(2*C+Z1)))*EXP(X1*(2*C+Z1))
480 LET A5=A5+(X6*CØS(-Y1*Z1)-Y6*SIN(-Y1*Z1))*EXP(-X1*Z1)
490 LETB5=(Y5*CØS(Y1*(2*C+Z1))+X5*SIN(Y1*(2*C+Z1)))*EXP(X1*(2*C+Z1))
500 LET B5=B5+(Y6*CØS(Y1*Z1)-X6*SIN(Y1*Z1))*EXP(-X1*Z1)
510 LET C6=(X+X1)*(X1+X2)-Y1*(Y1+Y2)
520 LET C7=Y1*(X1+X2)+(X+X1)*(Y1+Y2)
530 LET C5=(X-X1)*(X1-X2)+Y1*(Y1-Y2)+(C6*Y3-C7*Y4)*X3
540 LET D5=(X-X1)*(Y1-Y2)-Y1*(X1-X2)+(C7*Y3+C6*Y4)*X3
550 GØTØ600
560 LET A5=EXP(X1*Z1)*CØS(Y1*Z1)
570 LET B5=EXP(X1*Z1)*SIN(Y1*Z1)
580 LET C5=X+X1
590 LET D5=Y1
600 LETK1=(A5*C5+B5*D5)/(C5*C5+D5*D5)
610 LETK2=(C5*B5-A5*D5)/(C5*C5+D5*D5)
620 LETI6=I6+S3*K1
630 LETI8=I8+S3*K2
640 NEXT X
650 LET B1=B1+S2
660 LET B2=B2+S2
670 LET Q3=X+S1/2
680 LETQ2=ATN(I8/I6)
690 IFI6>0THEN710
700 LET Q2=Q2+3.1415927
710 PRINTQ3,3*M1*(I6*I6+I8*I8)/(4*PI*I9),2*Q2
720 IF X < 3 THEN 220
730 LET S1=5E-2
740 IF X<10 THEN 220
750 LETS1=.1
760 IFX<30THEN220
770 GØTØ 1040
780 IFZ>5THEN 870
790 LETL5=INT(2*Z)+3
800 LETF1=.5*Q1*Q1*Z
810 LET F2=F1/3
820 FØRN=1TØL5
830 LETF1=-F1*.250*Z*Z/(N*N+N)
840 LETF2=F2+F1/(2*N+3)
850 NEXTN
860 GØTØ 920
870 LET Q1=(((-188.1357/Z+109.1142)/Z-23.79333)/Z+2.050931)/Z
880 LET Q1=((Q1-.1730503)/Z+.7034845)/Z-.064109E-3
890 LET Q2=(((-5.817517/Z+2.105874)/Z-.6896196)/Z+.4952024)/Z
900 LET Q2=(Q2-.187344E-2)/Z+.7979095
910 LET F2=(1-SQR(Z)*(Q2*CØS(Z-PI/4)-Q1*SIN(Z-PI/4)))/(X*X)
920 RETURN
930 IFZ>3THEN 980
```

```
940 LET Q1=(((2.1E-11*Z↑2-5.38E-9)*Z↑2+6.757E-7)*Z↑2-5.42443E-5)*Z↑2
950 LET Q1=((Q1+2.60415E-3)*Z↑2-6.25E-2)*Z↑2+.5
960 LET J1=Z*Q1
970 GØTØ 1030
980 LET Q3=(((-.14604057/Z+.27617679)/Z-.20210391)/Z+4.61835E-3)/Z
990 LET Q3=((Q3+.14937)/Z+4.68E-6)/Z+.79788456
1000 LET Q4=(((-.21262014/Z+.19397232)/Z+6.022188E-2)/Z-1.7222733E-1)/Z
1010 LET Q4=((Q4+5.085E-4)/Z+.37498836)/Z-2.35619449+Z
1020 LET J1=Q3*CØS(Q4)/SQR(Z)
1030 RETURN
1040 END
```

Lattice of Defects in Cladding Material

Discussion of DELAT

This program is designed to calculate the defect sensitivity factor for a coil with rectangular cross section above a conductor consisting of two layers, which may be of different types of material. For this program, the defect may be located at any one of a number of points on a lattice in the upper layer, which is labeled III in Fig. 3, p. 14.

To use this program, one must first divide all dimensions by the mean radius of the coil. The results will, of course, be dimensionless and will be referred to as being "normalized." The product of the angular frequency of the driving current, the permeability, the conductivity, and the square of the mean radius of the coil must be calculated for each conductor. Let this product be denoted by $\omega\mu_1\sigma_1\overline{r}^2$ for the upper layer and by $\omega\mu_2\sigma_2\overline{r}^2$ for the lower one.

Once these calculations have been made, one need only type the following lines into the program. (Note: Parentheses should not be typed.)

12 LET R1 = (numerical value of normalized inner coil radius)

14 LET R2 = (numerical value of normalized outer coil radius)

16 LET L1 = (numerical value of normalized lift-off)

18 LET L2 = (numerical value of normalized lift-off plus normalized coil length)

20 LET M1 = (numerical value of $\omega\mu_1\sigma_1\overline{r}^2$)

22 LET M2 = (numerical value of $\omega\mu_2\sigma_2\overline{r}^2$)

Note: If the conductivity of the lower conductor is zero, one must type two additional lines:

86 LET X2 = X

88 LET Y2 = 0

24 LET C = (numerical value of normalized thickness of upper conductor)

26 LET I9 = (normalization factor)

Note: This value may be obtained with the aid of AIRCO simply by placing the appropriate coil dimensions in that program.

28 LET M9 = (numerical value of number of lattice spacings in R direction)

30 LET N9 = (numerical value of number of lattice spacings in Z direction)

32 LET R9 = (numerical value of maximum normalized radial position of defect)

Note: Neither M9 nor N9 may exceed 15. The lattice spacing in the R direction is R9/M9, while it is C/N9 in the Z direction.

The program may now be run.

The print-out by the computer will have the following format:

```
R1 = (R1)        R2=(R2)       L1=(L1)          L2=(L2)
CLAD THICKNESS   IS (C)        M1=(M1)          M2=(M2)
Z,R              (R(1))        (R(2))     **********        (R(M9))
(Z(1))           ------        ------     **********        ------
                 ------        ------     **********        ------
(Z(2))           ------        ------     **********        ------
                 ------        ------     **********        ------
   *               *             *            *                *
   *               *             *            *                *
   *               *             *            *                *
   *               *             *            *                *
(Z(N9))          ------        ------     **********        ------
                 ------        ------     **********        ------
```

The various symbols enclosed in parentheses are used here to indicate that the numerical value of the symbol will be printed. The upper value at each lattice point is the magnitude of the defect sensitivity factor, while the lower one is the phase of the defect sensitivity factor

for the case in which the defect is located at the given lattice point. It should be noted that the lattice points for which M9 > 4 will be printed below the last line – that is, the line containing Z(N9).

The example below is presented for additional aid to those who wish to use this program.

Sample Calculation of DELAT

Suppose that we wish to know the defect sensitivity factor for a coil 0.250 in. long with inner and outer radii of 0.125 and 0.375 in., respectively, above 0.020 in. of copper clad on an aluminum conductor of effectively infinite thickness (at least four coil diameters or skin depths, whichever is smaller). Let us further suppose that we are interested in the defect sensitivity factor for the cases in which the defect is located at any one of the points which lie within 0.500 in. of the coil axis on a 4 × 2 lattice in the copper conductor. We shall assume the driving frequency to be 5 kHz and the lift-off to be 0.005 in.

First, we determine the mean coil radius to be 0.250 in. so that

Normalized inner coil radius = 0.125/0.250 = 0.5
Normalized outer coil radius = 0.375/0.250 = 1.5
Normalized lift-off = 0.005/0.250 = 0.02
Normalized coil length = 0.250/0.250 = 1
Normalized thickness of copper = 0.020/0.250 = 0.08
Maximum radial position of defect = 0.500/0.250 = 2
Number of R lattice spacings = 4
Number of Z lattice spacings = 2

Furthermore,

Angular frequency of driving current = $2\pi \times 5000\ \mathrm{sec}^{-1}$
Permeability of both conductors = $4\pi \times 10^{-7}$ h/m
Conductivity of copper = 5.77×10^{7} mhos/m
Conductivity of aluminum = 2.86×10^{7} mhos/m

Thus,

$$\omega\mu_1\sigma_1\overline{r}^2 = 91.91$$
$$\omega\mu_2\sigma_2\overline{r}^2 = 45.48$$

At this point one determines the normalization factor by placing the normalized coil dimensions in AIRCO and running that program. It is worth noting that the normalization factor is independent of all variables except for the coil dimensions. This factor is the first normalization factor in the print-out of AIRCO and for the case in point is found to be 0.1604008. The remaining procedure is quite simple.

The above information is now typed into the program as follows:

```
12 LET R1 = 0.5
14 LET R2 = 1.5
16 LET L1 = 0.02
18 LET L2 = 1.02
20 LET M1 = 91.91
22 LET M2 = 45.48
24 LET C = 0.08
26 LET I9 = 0.1604008
28 LET M9 = 4
30 LET N9 = 2
32 LET R9 = 2
```

The program is now run with the following results:

R1 = 0.5	R2 = 1.5	L1 = 0.2E-01	L2 = 1.02	
CLAD = 0.08	M1 = 91.91	M2 = 45.48		
Z,R	0.25	0.75	1.25	1.75
-.02	2.48653E-2	.16025	.102609	2.13112E-2
	-1.80821	-1.86373	-2.215	-2.78744
-.06	1.62227E-2	.118717	8.76213E-2	.01964
	-2.35137	-2.21069	-2.35673	-2.61333

From this we see that for the case in which the defect is located at R = 1.25, Z = -0.06 the defect sensitivity factor is 0.0876213 exp(-j 2.35673).

To obtain the change in normalized impedance, we multiply the defect sensitivity factor by the product of the defect volume and the shape and orientation factor. Note that the defect volume must be calculated from dimensions which are normalized by the mean radius of the coil.

DELAT Program

```
10 REM          DELAT          VERSIØN 10/6/70
12 LET R1=.5
14 LET R2=1.5
16 LET L1=.02
18 LET L2=1.02
20 LET M1=91.91
22 LET M2=45.48
24 LET C=.08
26 LET I9=.1604008
28 LET M9=4
30 LET N9=2
32 LET R9=2
34 DIM R(18,15), I(18,15), P(18,15)
36 PRINT:1:R1,R2,L1,L2
38 PRINT:1:C,M1,M2,I9
39 PRINT:1:M9,N9,R9
40 LET S1=1E-2
42 LET S2=5
44 FØRJ=1TØN9
46 FØRI=1TØM9
48 LETR(I,J)=0
50 LETI(I,J)=0
52 NEXTI
54 NEXTJ
56 LET B1=0
58 LET B2 =S2
60 FØRX=B1+S1/2TØB2STEPS1
62 LET Z=R2*X
64 LET Q1=R2
66 GØSUB 246
68 LETI2=F2
70 LET Z=R1*X
72 LET Q1=R1
74 GØSUB246
76 LET I1=F2
78 LET S3=(I2-I1)*S1*(EXP(-X*L1)-EXP(-X*L2))
80 LET X1 = .707107*SQR(SQR(X*X*X*X+M1*M1)+X*X)
82 LET Y1 = .707107*SQR(SQR(X*X*X*X+M1*M1)-X*X)
84 IFX1*C>15THEN114
86 LET X2 = .707107*SQR(SQR(X*X*X*X+M2*M2)+X*X)
88 LET Y2 =.707107*SQR(SQR(X*X*X*X+M2*M2)-X*X)
90 LET X3=EXP(2*X1*C)
92 LET Y3=CØS(2*Y1*C)
94 LET Y4=SIN(2*Y1*C)
96 LET X5=X1+X2
98 LET X6=X1-X2
100 LET Y5=Y1+Y2
102 LET Y6=Y1-Y2
104 LET C6=(X+X1)*(X1+X2)-Y1*(Y1+Y2)
106 LET C7=Y1*(X1+X2)+(X+X1)*(Y1+Y2)
108 LET C5=(X-X1)*(X1-X2)+Y1*(Y1-Y2)+(C6*Y3-C7*Y4)*X3
110 LETD5=(X-X1)*(Y1-Y2)-Y1*(X1-X2)+(C7*Y3+C6*Y4)*X3
112 GØ TØ 118
114 LETC5=X+X1
116 LETD5=Y1
118 FØRJ=1TØN9
```

```
120 LETZ1=(.5-J)*C/N9
122 IFX1*C>15THEN136
124 LETZ2=2*C+Z1
126 LETA5=(X5*CØS(Y1*Z2)-Y5*SIN(Y1*Z2))*EXP(X1*Z2)
128 LETA5=A5+(X6*CØS(-Y1*Z1)-Y6*SIN(-Y1*Z1))*EXP(-X1*Z1)
130 LET B5=(Y5*CØS(Y1*Z2)+X5*SIN(Y1*Z2))*EXP(X1*Z2)
132 LET B5=B5+(Y6*CØS(Y1*Z1)-X6*SIN(Y1*Z1))*EXP(-X1*Z1)
134 GØ TØ 140
136 LETA5=EXP(X1*Z1)*CØS(Y1*Z1)
138 LETB5=EXP(X1*Z1)*SIN(Y1*Z1)
140 LETK1=(A5*C5+B5*D5)/(C5*C5+D5*D5)
142 LET K2=(C5*B5-A5*D5)/(C5*C5+D5*D5)
144 FØRI=1TØM9
146 LETR=(I-.5)*R9/M9
148 LETZ=X*R
150 GØSUB276
152 LETR(I,J)=R(I,J)+S3*K1*J1
154 LETI(I,J)=I(I,J)+S3*K2*J1
156 NEXT I
158 NEXTJ
160 NEXTX
162 LETB1=B1+S2
164 LETB2=B2+S2
166 LETS1=5E-2
168 IF X<15 THEN 60
170 LET S1=.1
172 IF X<35 THEN 60
174 FØRJ=1TØN9
176 FØRI=1TØM9
178 LET P(I,J)=2*ATN(I(I,J)/R(I,J))
180 IF R(I,J)>0 THEN 184
182 LET P(I,J)=P(I,J)+2*PI
184 LET R(I,J)=3*M1*(R(I,J)*R(I,J)+I(I,J)*I(I,J))/(4*PI*I9)
186 NEXTI
188 NEXTJ
190 PRINT:1:"Z,R",.5*R9/M9,1.5*R9/M9,2.5*R9/M9,3.5*R9/M9
192 FØRJ=1TØN9
194 PRINT:1:(.5-J)*C/N9,R(1,J),R(2,J),R(3,J),R(4,J)
196 PRINT:1:" ",P(1,J),P(2,J),P(3,J),P(4,J)
198 PRINT:1:
200 NEXTJ
202 IFM9<4.5THEN298
204 PRINT:1:4.5*R9/M9,5.5*R9/M9,6.5*R9/M9,7.5*R9/M9,8.5*R9/M9
206 FØRJ=1TØN9
208 PRINT:1:R(5,J), R(6,J),R(7,J),R(8,J),R(9,J)
210 PRINT:1:P(5,J),P(6,J),P(7,J),P(8,J),P(9,J)
212 PRINT:1:
214 NEXTJ
216 IFM9<9.5THEN298
218 PRINT:1:9.5*R9/M9,10.5*R9/M9,11.5*R9/M9,12.5*R9/M9,13.5*R9/M9
220 FØRJ=1TØN9
222 PRINT:1:R(10,J),R(11,J),R(12,J),R(13,J),R(14,J)
224 PRINT:1:P(10,J),P(11,J),P(12,J),P(13,J),P(14,J)
226 PRINT:1:
228 NEXTJ
230 IFM9<14.5THEN298
232 PRINT:1:14.5*R9/M9,15.5*R9/M9,16.5*R9/M9,17.5*R9/M9,18.5*R9/M9
234 FØRJ=1TØN9
236 PRINT:1:R(15,J),R(16,J),R(17,J),R(18,J)
```

```
238 PRINT:1:P(15,J),P(16,J),P(17,J),P(18,J)
240 PRINT:1:
242 NEXTJ
244 GØTØ 298
246 IFZ>5THEN 264
248 LETL5=INT(2*Z)+3
250 LETF1=.5*Q1*Q1*Z
252 LET F2=F1/3
254 FØRN=1TØL5
256 LETF1=-F1*.250*Z*Z/(N*N+N)
258 LETF2=F2+F1/(2*N+3)
260 NEXTN
262 GØTØ 274
264 LET Q1=(((-188.1357/Z+109.1142)/Z-23.79333)/Z+2.050931)/Z
266 LET Q1=((Q1-.1730503)/Z+.7034845)/Z-.064109E-3
268 LET Q2=(((-5.817517/Z+2.105874)/Z-.6896196)/Z+.4952024)/Z
270 LET Q1=(((2.1E-11*Z↑2-5.38E-9)*Z↑2+6.757E-7)*Z↑2-5.42443E-5)*Z↑2
272 LET F2=(1-SQR(Z)*(Q2*CØS(Z-PI/4)-Q1*SIN(Z-PI/4)))/(X*X)
274 RETURN
276 IFZ>3THEN 286
278 LET Q1=(((2.1E-11*2-5.38E-9)*2+6.757E-7)*2-5.42443E-5)*2
280 LET Q1=((Q1+2.60415E-3)*Z↑2-6.25E-2)*Z↑2+.5
282 LET J1=Z*Q1
284 GØTØ 296
286 LET Q3=(((-.14604057/Z+.27617679)/Z-.20210391)/Z+4.618353E-3)/Z
288 LET Q3=((Q3+.14937)/Z+4.68E-6)/Z+.79788456
290 LETQ4=(((-.2120014/Z+.19397232)/Z+6.02218E-2)/Z-1.7222733E-1)/Z
292 LETQ4=((Q4+5.085E-4)/Z+.37498836)/Z-2.35619449+Z
294 LETJ1=Q3*CØS(Q4)/SQR(Z)
296 RETURN
298END
```

Defect in Base Material

Discussion of DEFECB

This program is designed to calculate the defect sensitivity factor for a coil with rectangular cross section above a conductor consisting of two layers, which may be of different types of material. For this program, the defect must be located in the lower layer, which is labeled IV in Fig. 3, p. 14.

To use this program, one must divide all dimensions by the mean radius of the coil. The results will, of course, be dimensionless and will be referred to as being "normalized." The product of the angular frequency of the driving current, the permeability, the conductivity, and the square of the mean radius of the coil must be calculated for each conductor. Let this product be denoted by $\omega\mu_1\sigma_1\overline{r}^2$ for the upper layer and by $\omega\mu_2\sigma_2\overline{r}^2$ for the lower one.

Once these calculations have been made, one need only type the following lines into the program. (Note: Parentheses should not be typed.)

20 LET R1 = (numerical value of normalized inner coil radius)

30 LET R2 = (numerical value of normalized outer coil radius)

40 LET L1 = (numerical value of normalized lift-off)

50 LET L2 = (numerical value of normalized lift-off plus normalized coil length)

60 LET M1 = (numerical value of $\omega\mu_1\sigma_1\bar{r}^2$)

Note: If the conductivity of the upper conductor is zero, one must type two additional lines:

350 LET X1 = X

360 LET Y1 = 0

70 LET M2 = (numerical value of $\omega\mu_2\sigma_2\bar{r}^2$)

80 LET C = (numerical value of normalized thickness of upper conductor)

90 LET R = (numerical value of normalized R position coordinate of defect)

100 LET Z1 = (numerical value of normalized Z position coordinate of defect)

110 LET I9 = (normalization factor)

Note: This value may be obtained with the aid of AIRCO simply by placing the appropriate coil dimensions in that program.

The program may now be run.

The print-out by the computer will have the following format:

```
R1 = (R1)      R2 = (R2)     L1 = (L1)       L2 = (L2)
CLAD THICKNESS IS (C)        M1 = (M1)       M2 = (M2)
DEFECT POSITION IS           R = (R)         Z  = (Z1)
X                MAGNITUDE    PHASE
5                ------       ------
10               ------       ------
15               ------       ------
20               ------       ------
25               ------       ------
30               ------       ------
35               ------       ------
```

The various symbols enclosed in parentheses are used here to indicate that the numerical value of the symbol will be printed. The three columns, headed "X," "MAGNITUDE," and "PHASE," are the upper limit of the numerical integration being performed by the computer, the magnitude of the defect sensitivity factor, and the phase of the defect sensitivity factor, respectively. These appear principally to allow one to inspect the convergence of the integration. The magnitude and phase values for X = 35 are the ones for which convergence can be considered complete to within 0.01%.

The example below is presented for additional aid to those who wish to use this program.

Sample Calculation of DEFECB

Suppose that we wish to know the defect sensitivity factor for a coil 0.250 in. long with inner and outer radii of 0.125 and 0.375 in., respectively, above 0.020 in. of copper clad on an aluminum conductor of effectively infinite thickness (at least four coil diameters or skin depths, whichever is smaller). Let us further suppose that we are interested in the defect sensitivity factor for the case in which the defect is located 0.030 in. below the surface of the copper, 0.250 in. from the coil axis. We shall assume the driving frequency to be 5 kHz and the lift-off to be 0.005 in.

First, we determine the mean coil radius to be 0.250 in., so that

Normalized inner coil radius = 0.125/0.250 = 0.5
Normalized outer coil radius = 0.375/0.250 = 1.5
Normalized lift-off = 0.005/0.250 = 0.02
Normalized coil length = 0.250/0.250 = 1
Normalized thickness of copper = 0.020/0.250 = 0.08
Normalized R position of defect = 0.250/0.250 = 1
Normalized Z position of defect = 0.030/0.250 = 0.12

Furthermore,

Angular frequency of driving current = $2\pi \times 5000$ sec^{-1}
Permeability of both conductors = $4\pi \times 10^{-7}$ h/m

Conductivity of copper = 5.77×10^7 mhos/m

Conductivity of aluminum = 2.86×10^7 mhos/m

Thus,

$$\omega\mu_1\sigma_1\bar{r}^2 = 91.91$$
$$\omega\mu_2\sigma_2\bar{r}^2 = 45.48$$

At this point one determines the normalization factor by placing the normalized coil dimensions in AIRCO and running that program. It is worth noting that the normalization factor is independent of all variables excluding the coil dimensions. This factor is the first normalization factor in the print-out of AIRCO and for the case in point is found to be 0.1604008. The remaining procedure is quite simple.

The above information is now typed into the program as follows:

```
20 LET R1 = 0.5
30 LET R2 = 1.5
40 LET L1 = 0.02
50 LET L2 = 1.02
60 LET M1 = 91.91
70 LET M2 = 45.48
80 LET C = 0.08
90 LET R = 1
100 LET Z1 = -0.12
110 LET I9 = 0.1604008
```

The program is now run with the following results:

```
R1 = 0.5        R2 = 1.5        L1 = 0.2E-01      L2 = 1.02
CLAD THICKNESS IS 0.08          M1 = 91.91        M2 = 45.48
DEFECT POSITION IS              R = 1             Z = -0.12
X               MAGNITUDE       PHASE
5               0.1452237       -2.7559514
10              0.14763532      -2.7590948
15              0.14728876      -2.761718
20              0.14740717      -2.760311
25              0.14737916      -2.7607304
30              0.14738376      -2.7606505
35              0.1473835       -2.7606562
```

From this we see that the defect sensitivity factor is 0.1473835 exp(−j 2.7606562). To obtain the change in normalized impedance, we multiply the defect sensitivity factor by the product of the defect volume and the shape and orientation factor. Note that the defect volume must be calculated from dimensions which are normalized by the mean radius of the coil.

DEFECB Program

```
10 REM          DEFECB          VERSIØN         03/05/69
20 LET R1=.5
30 LET R2=1.5
40 LET L1=.02
50 LET L2=1.02
60 LET M1=91.91
70 LET M2=45.48
80 LET C=.08
90 LETR=1
100 LET Z1=-.12
110 LET I9=.1604008
120 PRINT "R1=";R1,"R2=";R2,"L1=";L1,"L2=";L2
130 PRINT "CLAD THICKNESS IS";C,"M1=";M1,"M2=";M2
140 PRINT "DEFECT PØSITIØN IS","R=";R,"Z=";Z1
150 PRINT "X", "MAGNITUDE" , "PHASE"
160 LET S1=1E-2
170 LET S2=5
180 LET I6=0
190 LET I8=0
200 LET B1=0
210 LET B2 =S2
220 FØR X = B1 +S1/2 TØ B2 STEP S1
230 LET Z=R2*X
240 LET Q1=R2
250 GØSUB 680
260 LET I2=F2
270 LET Z=R1*X
280 LET Q1=R1
290 GØSUB 680
300 LET I1=F2
310 LET I3=I2-I1
320 LET Z=X*R
330 GØSUB 830
340 LETS3=(I2-I1)*J1*S1*(EXP(-X*L1)-EXP(-X*L2))
350 LET X1 = .707107*SQR(SQR(X*X*X*X+M1*M1)+X*X)
360 LET Y1 = .707107*SQR(SQR(X*X*X*X+M1*M1)-X*X)
370 LET X2 = .707107*SQR(SQR(X*X*X*X+M2*M2)+X*X)
380 LET Y2=.707107*SQR(SQR(X*X*X*X+M2*M2)-X*X)
390 LET X3=EXP(2*X1*C)
400 LET Y3=CØS(2*Y1*C)
410 LET Y4=SIN(2*Y1*C)
420 LET X5=CØS((Y1+Y2)*C+Y2*Z1)
430 LET Y5=SIN((Y1+Y2)*C+Y2*Z1)
440 LET X6=2*EXP((X1+X2)*C+X2*Z1)
450 LET A5=X1*X5-Y1*Y5
```

```
460 LET B5=Y1*X5+X1*Y5
470 LET C6=(X+X1)*(X1+X2)-Y1*(Y1+Y2)
480 LET C7=Y1*(X1+X2)+(X+X1)*(Y1+Y2)
490 LET C5=(X-X1)*(X1-X2)+Y1*(Y1-Y2)+(C6*Y3-C7*Y4)*X3
500 LET D5=(X-X1)*(Y1-Y2)-Y1*(X1-X2)+(C7*Y3+C6*Y4)*X3
510 LETK1=X6*(A5*C5+B5*D5)/(C5*C5+D5*D5)
520 LETK2=X6*(C5*B5-A5*D5)/(C5*C5+D5*D5)
530 LETI6=I6+S3*K1
540 LETI8=I8+S3*K2
550 NEXT X
560 LET B1=B1+S2
570 LET B2=B2+S2
580 LETQ2=ATN(I8/I6)
590 IFI6>0THEN610
600 LET Q2=Q2+3.1415927
610 PRINT X+S1/2,M2*(I6*I6+I8*I8)/I9,2*Q2
620 IF X < 3 THEN 220
630 LET S1=5E-2
640 IF X<10 THEN 220
650 LETS1=.1
660 IFX<30THEN220
670 GØTØ 940
680 IFZ>5THEN 770
690 LETL5=INT(2*Z)+3
700 LETF1=.5*Q1*Q1*Z
710 LET F2=F1/3
720 FØRN=1TØL5
730 LETF1=-F1*.250*Z*Z/(N*N+N)
740 LETF2=F2+F1/(2*N+3)
750 NEXTN
760 GØTØ 820
770 LET Q1=(((-188.1357/Z+109.1142)/Z-23.79333)/Z+2.050931)/Z
780 LET Q1=((Q1-.1730503)/Z+.7034845)/Z-.064109E-3
790 LET Q2=(((-5.817517/Z+2.105874)/Z-.6896196)/Z+.4952024)/Z
800 LET Q2=(Q2-.187344E-2)/Z+.7979095
810 LET F2=(1-SQR(Z)*(Q2*CØS(Z-PI/4)-Q1*SIN(Z-PI/4)))/(X*X)
820 RETURN
830 IFZ>3THEN 880
840 LET Q1=(((2.1E-11*Z↑2-5.38E-9)*Z↑2+6.757E-7)*Z↑2-5.42443E-5)*Z↑2
850 LET Q1=((Q1+2.60415E-3)*Z↑2-6.25E-2)*Z↑2+.5
860 LET J1=Z*Q1
870 GØTØ 930
880 LET Q3=(((-.14604057/Z+.27617679)/Z-.20210391)/Z+4.61835E-3)/Z
890 LET Q3=((Q3+.14937)/Z+4.68E-6)/Z+.79788456
900 LET Q4=(((-.21262014/Z+.19397232)/Z+6.022188E-2)/Z-1.7222733E-1)/Z
910 LET Q4=((Q4+5.085E-4)/Z+.37498836)/Z-2.35619449+Z
920 LET J1=Q3*CØS(Q4)/SQR(Z)
930 RETURN
940 END
```

Force on a Conductor

Discussion of FORCE

This program is designed to calculate the force on a conducting plate of effectively infinite thickness due to the current flowing in a coil of rectangular cross section placed above it. The physical situation is depicted by Fig. 3, p. 14, assuming regions III and IV to be identical.

To use this program, one must first divide all dimensions by the mean radius of the coil. The results will, of course, be dimensionless and will be referred to as being "normalized." The product of the angular frequency of the driving current, the permeability, the conductivity, and the square of the mean radius of the coil must be calculated for the conductor. Let this product be denoted by $\omega\mu\sigma\bar{r}^2$.

Once these calculations have been made, one need only type the following lines into the program. (Note: Parentheses should not be typed.)

```
20 LET R1 = (numerical value of normalized inner coil radius)
30 LET R2 = (numerical value of normalized outer coil radius)
40 LET L = (numerical value of normalized lift-off)
50 LET L1 = (numerical value of normalized coil length)
60 LET M1 = (numerical value of ωμσr̄²)
```

The program may now be run.

The print-out by the computer will have the following format:

```
COIL LENGTH IS (L1)      R1 = (R1)      R2 = (R2)
LIFT-OFF IS (L)          M1 = (M1)
X                        FORCE/I↑2
5                        ------
10                       ------
15                       ------
20                       ------
```

The various symbols enclosed in parentheses are used here to indicate that the numerical value of the symbol will be printed. The first column, headed "X," is the upper limit of the numerical integration being performed by the computer, while the second column is the force divided

by the square of the ampere-turns of the coil. These appear principally to allow one to inspect the convergence of the integration. The force value for X = 20 is the one for which convergence can be considered to be complete.

The example below is presented for additional aid to those who wish to use this program.

Sample Calculation of FORCE

Suppose that we wish to know the force on a copper conductor of effectively infinite thickness (at least four coil diameters or skin depths, whichever is smaller) due to the current in a 0.250-in.-long coil with inner and outer radii of 0.125 and 0.375 in., respectively. The driving frequency is assumed to be 50 kHz and the lift-off to be 0.005 in.

First, we determine the mean coil radius to be 0.250 in., so that

Normalized inner coil radius = 0.125/0.250 = 0.5

Normalized outer coil radius = 0.375/0.250 = 1.5

Normalized lift-off = 0.005/0.250 = 0.02

Normalized coil length = 0.250/0.250 = 1

Furthermore,

Angular frequency of driving current = $2\pi \times 50{,}000\ \mathrm{sec}^{-1}$

Conductivity of copper = 5.77×10^{7} mhos/m

Permeability of copper = $4\pi \times 10^{-7}$ h/m

Thus,

$$\omega\mu\sigma\bar{r}^2 = 919.1.$$

The above information is now typed into the program as follows:

```
20 LET R1 = 0.5
30 LET R2 = 1.5
40 LET L = 0.02
50 LET L1 = 1
60 LET M1 = 919.1
```

The program is now run with the following results:

COIL LENGTH IS 1	R1 = 0.5	R2 = 1.5
LIFT-OFF IS 0.2E-01	M1 = 919.1	
X	FORCE/I↑2	
5	0.322771E-06	
10	0.324026E-06	
15	0.324096E-06	
20	0.324111E-06	

From this we see that the force per ampere-turn squared is 0.324111×10^{-6} N/(amp-turn)^2.

FORCE Program

```
10 REM          FØRCE              VERSIØN     07/26/68
20 LET R1=.8333
30 LET R2=1.1667
40 LET L=.0952
50 LET L1=.3333
60 LET M1=862.8
70 PRINT"CØIL LENGTH IS";L1,"R1=";R1,"R2=";R2
80 PRINT"LIFTØFF IS";L,"M1=";M1
90 PRINT"X"," ","FØRCE/I↑2"
100 LET S1=1E-2
110 LET S2=5
120 LET I6=0
130 LET B1=0
140 LET B2 =S2
150 FØR X=B1+S1/2 TØ B2 STEP S1
160 LET Z=R2*X
170 LET Q1=R2
180 GØ SUB 390
190 LET I2=F2
200 LET Z=R1*X
210 LET Q1=R1
220 GØ SUB 390
230 LET I1=F2
240 LET I3=I2-I1
250 LET S3=S1*I3*I3
260 LET X1=.707107*SQR(SQR(X*X*X*X+M1*M1)+X*X)
270 LET Y1=.707107*SQR(SQR(X*X*X*X+M1*M1)-X*X)
280 LET K1=Y1/(X1*X*X+2*X*X1*X1+X1*X1*X1+Y1*Y1*X1)
290 LET I6=I6+S3*K1*X*(EXP(-X*L)-EXP(-X*(L+L1)))↑2
300 NEXT X
310 LET B1=B1+S2
320 LET B2=B2+S2
330 LET F1=1.97392E-6*I6*M1/(L1*(R2-R1))↑2
340 PRINTX+S1/2," ",F1
350 IF X<3THEN 150
360 LET S1=5E-2
370 IF X<15 THEN 150
```

```
380 GØ TØ 540
390 IFZ>5THEN 480
400 LETL5=INT(2*Z)+3
410 LETF1=.5*Q1*Q1*Q1
420 LET F2=F1/3
430 FØRN=1TØL5
440 LETF1=-F1*.250*Z*Z/(N*N+N)
450 LETF2=F2+F1/(2*N+3)
460 NEXTN
470 GØTØ 530
480 LET Q1=(((-188.1357/Z+109.1142)/Z-23.79333)/Z+2.050931)/Z
490 LET Q1=((Q1-.1730503)/Z+.7034845)/Z-.064109E-3
500 LET Q2=(((-5.817517/Z+2.105874)/Z-.6896196)/Z+.4952024)/Z
510 LET Q2=(Q2-.187344E-2)/Z+.7979095
520 LET F2=(1-SQR(Z)*(Q2*CØS(Z-PI/4)-Q1*SIN(Z-PI/4)))/(X*X*X)
530 RETURN
540 END
```

COIL ABOVE A THREE-CONDUCTOR PLANE

Discussion of 3CONDT

This program is designed to calculate the normalized impedance of a coil with rectangular cross section above a conductor consisting of three layers, all of which may be of different types of material (see Fig. 4).

To use this program, one must first divide all dimensions by the mean radius of the coil. The results will, of course, be dimensionless and will be referred to as being "normalized." The product of the angular frequency of the driving current, the permeability, the conductivity, and the square of the mean radius of the coil must be calculated for each conductor. Let this product be denoted by $\omega\mu_1\sigma_1\bar{r}^2$ for the upper layer, by $\omega\mu_2\sigma_2\bar{r}^2$ for the middle layer, and by $\omega\mu_3\sigma_3\bar{r}^2$ for the lower layer.

Once these calculations have been made, one need only type the following lines into the program. (Note: Parentheses are not typed.)

20 LET R1 = (numerical value of normalized inner coil radius)

30 LET R2 = (numerical value of normalized outer coil radius)

40 LET L1 = (numerical value of normalized lift-off)

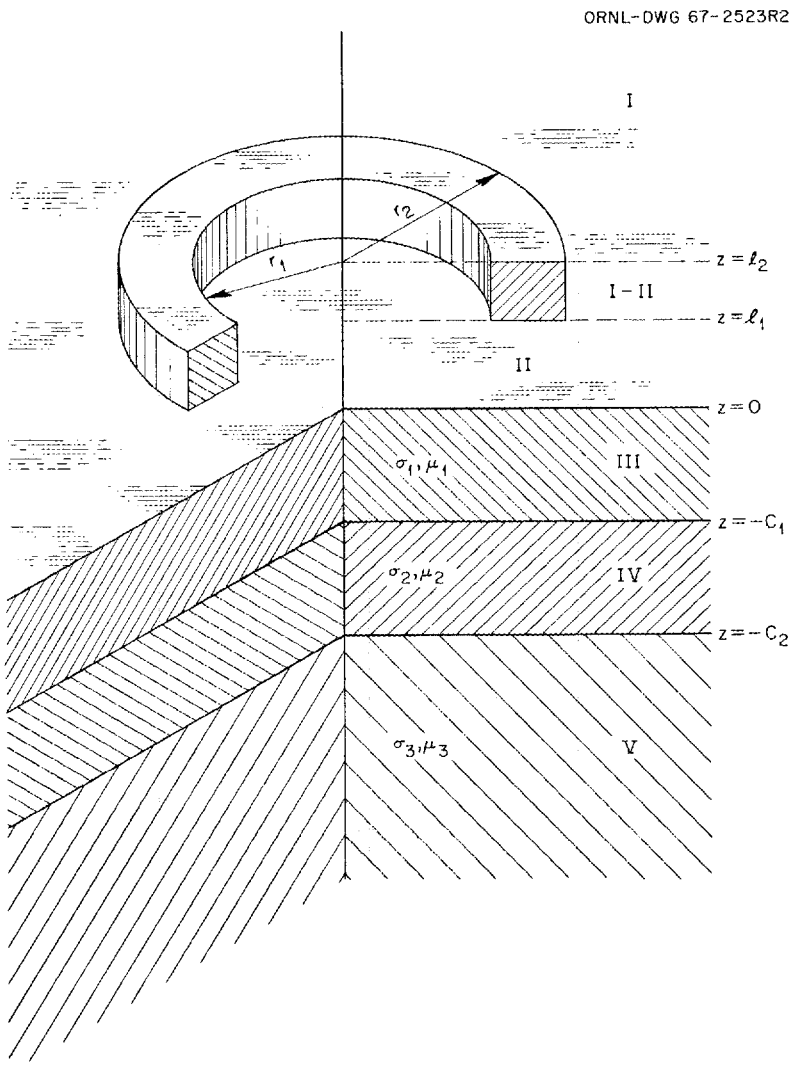

Fig. 4. A Coil with a Rectangular Cross Section Above a Three-Conductor Plane.

50 LET L2 = (numerical value of lift-off plus normalized coil length)

60 LET M1 = (numerical value of $\omega\mu_1\sigma_1\overline{r}^2$)

Note: If the conductivity of the upper conductor is zero, one must type two additional lines:

360 LET X1 = X

370 LET Y1 = 0

70 LET U1 = (numerical value of relative permeability of upper conductor)

80 LET M2 = (numerical value of $\omega\mu_2\sigma_2\overline{r}^2$)

Note: If the conductivity of the middle conductor is zero, one must type two additional lines:

390 LET X2 = X

400 LET Y2 = 0

90 LET U2 = (numerical value of relative permeability of middle conductor)

100 LET M3 = (numerical value of $\omega\mu_3\sigma_3\overline{r}^2$)

Note: If the conductivity of the lower conductor is zero, one must type two additional lines:

570 LET X3 = X

580 LET Y3 = 0

110 LET U3 = (numerical value of relative permeability of lower conductor)

120 LET C1 = (numerical value of normalized thickness of upper conductor)

130 LET C2 = (numerical value of normalized thickness of upper plus middle conductors)

The program may now be run.

The print-out by the computer will have the following format:

```
R1 = (R1)                    R2 = (R2)                  L1 = (L1)   L2 = (L2)
CLAD1 = (C1)                                            CLAD2 = (C2)
M1 = (M1)      M2 = (M2)     M3 = (M3)    U1 = (U1)     U2 = (U2)   U3 = (U3)
X                            AIR VALUE                  REAL PART   IMAG PART
5.                           ------                     ------      ------
10.                          ------                     ------      ------
15.                          ------                     ------      ------
20.                          ------                     ------      ------
40.                          ------                     ------      ------
NORMALIZED IMAG PART         ------     NORMALIZED IMAG PART        ------
```

The various symbols enclosed in parentheses are used to indicate that the numerical value of the symbol will be printed. The four columns, headed "X," "AIR VALUE," "REAL PART," and "IMAG PART," are the upper limit of the numerical integration being performed by the computer, the value of the integral in the absence of the conductors, the real part of the integral in the presence of the conductors, and the imaginary part

of the integral in the presence of the conductors, respectively. These appear principally to allow one to inspect the convergence of the integration. The last line is the normalized impedance of the coil in the presence of the conductors.

The example below is presented for additional aid to those who wish to use this program.

Sample Calculation of 3CONDT

Suppose we wish to know the normalized impedance of a coil 0.250 in. long with inner and outer radii of 0.125 and 0.375 in., respectively, in the presence of 0.010 in. of silver clad on 0.010 in. of copper which in turn is clad on an aluminum conductor of effectively infinite thickness (at least four coil diameters or skin depths, whichever is smaller). We shall assume the driving frequency to be 5 kHz and the lift-off to be 0.005 in.

First, we determine the mean coil radius to be 0.250 in., so that

Normalized inner radius of coil = 0.125/0.250 = 0.5
Normalized outer radius of coil = 0.375/0.250 = 1.5
Normalized lift-off = 0.005/0.250 = 0.02
Normalized coil length = 0.250/0.250 = 1.0
Normalized thickness of silver = 0.010/0.250 = 0.04
Normalized thickness of silver plus copper = 0.020/0.250 = 0.08

Furthermore,

Angular frequency of driving current = $2\pi \times 5000\ \mathrm{sec}^{-1}$
Permeability of all three conductors = $4\pi \times 10^{-7}$ h/m
Relative permeability of all three conductors = 1
Conductivity of silver = 6.14×10^{7} mhos/m
Conductivity of copper = 5.77×10^{7} mhos/m
Conductivity of aluminum = 2.86×10^{7} mhos/m

Thus,

$$\omega\mu_1\sigma_1\overline{r}^2 = 97.79$$
$$\omega\mu_2\sigma_2\overline{r}^2 = 91.91$$
$$\omega\mu_3\sigma_3\overline{r}^2 = 45.48$$

This information is now typed into the program as follows:

```
20 LET R1 = 0.5
30 LET R2 = 1.5
40 LET L1 = 0.02
50 LET L2 = 1.02
60 LET M1 = 97.79
70 LET U1 = 1
80 LET M2 = 91.91
90 LET U2 = 1
100 LET M3 = 45.48
110 LET U3 = 1
120 LET C1 = 0.04
130 LET C2 = 0.08
```

The program is now run with the following results:

```
R1 = .5          R2 = 1.5          L1 = .02          L2 = 1.02
CLAD1 = .04                        CLAD2 = .08
M1 = 97.79   M2 = 91.91   M3 = 45.48   U1 = 1   U2 = 1   U3 = 1
X              AIR VALUE             REAL PART          IMAG PART
5.             .159232               .107024            -1.17516E-2
10.            .160231               .108004            -1.17739E-2
15.            .160337               .108111            -1.17744E-2
20.            .160375               .108149            -1.17744E-2
40.            .160401               .108174            -1.17744E-2
NORMALIZED IMAG PART .674399  NORMALIZED REAL PART 7.34063E-2
```

Thus, the normalized impedance of the coil is $Z_n = 0.0734063 + j\ 0.674399$.

3CONDT Program

```
10 REM 3CØNDT VERSIØN 10\08\69
20LETR1=.5
30LETR2=1.5
40LETL1=.02
50LETL2=1.02
60LETM1=91.91
70LETU1=1
80LETM2=45.48
90 LET U2=1
100 LET M3=55
110 LET U3=1
120LETC1=.08
130 LET C2=.16
140 PRINT "R1=";R1,"R2=";R2,"L1=";L1,"L2=";L2
```

```
150PRINT"CLAD1=";C1, ,"CLAD2=";C2
160PRINT"M1=";M1;"M2=";M2;"M3=";M3;"U1=";U1;"U2=";U2;"U3=";U3
170 PRINT "X", "AIR VALUE", "REAL PART", "IMAG PART"
180 LET S1=1E-2
190 LET S2=5
200 LET I6=0
210 LET I7=0
220 LET I8=0
230 LET I9=0
240 LET B1=0
250 LET B2=S2
260 FØR X=B1+S1/2 TØ B2 STEP S1
270 LET Z=R2*X
280 LET Q1=R2
290 GØ SUB 1100
300 LET I2=F2
310 LET Z=R1*X
320 LET Q1=R1
330 GØ SUB 1100
340 LET I1=F2
350 LET S3=S1*(I2-I1)↑2/X
360 LET X1=.707107*(SQR(SQR(X*X*X*X+M1*M1)+X*X))/U1
370 LET Y1=.707107*(SQR(SQR(X*X*X*X+M1*M1)-X*X))/U1
380 IF X1*C1*U1>15 THEN 810
390 LET X2=.707107*(SQR(SQR(X*X*X*X+M2*M2)+X*X))/U2
400 LET Y2=.707107*(SQR(SQR(X*X*X*X+M2*M2)-X*X))/U2
410 LET X4=EXP(2*X1*C1*U1)
420 LET Y4=CØS(2*Y1*C1*U1)
430LETY5 = SIN(2*Y1*C1*U1)
440 LET A1=(X-X1)*(X1+X2)+Y1*(Y1+Y2)
450 LET A2=(X-X1)*(Y1+Y2)-Y1*(X1+X2)
460 LET D1 = (X+X1)*(X1-X2)-Y1*(Y1-Y2)
470 LET D2=(X+X1)*(Y1-Y2)+Y1*(X1-X2)
480 LET A5= D1+(A1*Y4-A2*Y5)*X4
490 LET B5=D2+(A2*Y4+A1*Y5)*X4
500 LET A4=(X+X1)*(X1+X2)-Y1*(Y1+Y2)
510 LET D4=(X+X1)*(Y1+Y2)+Y1*(X1+X2)
520 LET A3=(X-X1)*(X1-X2)+Y1*(Y1-Y2)
530 LET D3=(X-X1)*(Y1-Y2)-Y1*(X1-X2)
540 LET C5=A3+(A4*Y4-D4*Y5)*X4
550 LET D5=D3+(D4*Y4+A4*Y5)*X4
560 IF (X1*C1*U1+X2*(C2-C1)*U2)>15 THEN 850
570 LET X3=.707107*(SQR(SQR(X*X*X*X+M3*M3)+X*X))/U3
580 LET Y3=.707107*(SQR(SQR(X*X*X*X+M3*M3)-X*X))/U3
590 LET X5=EXP(2*X2*(C2-C1)*U2)
600 LET Y6=CØS(2*Y2*(C2-C1)*U2)
610 LETY7=SIN(2*Y2*(C2-C1)*U2)
620 LET G1=X2+X3
630 LET G2=Y2+Y3
640 LET G3=X2-X3
650 LET G4=Y2-Y3
660 LET G5=G1*A5-G2*B5
670LETG6=G1*B5+G2*A5
680LETA6=A3*Y4-D3*Y5
690LETD6=A3*Y5+D3*Y4
700LETA7=X5*(G5*Y6-G6*Y7)+G3*(A4+X4*A6)-G4*(D4+X4*D6)
710LETD7=X5*(G5*Y7+G6*Y6)+G3*(D4+X4*D6)+G4*(A4+X4*A6)
720LETG7=G1*C5-G2*D5
730LETG8=G1*D5+G2*C5
```

```
740LETB6=D1*Y4-D2*Y5
750LETC6=D1*Y5+D2*Y4
760 LET A8=X5*(G7*Y6-G8*Y7)+G3*(A1+X4*B6)-G4*(A2+X4*C6)
770LETD8=X5*(G7*Y7+G8*Y6)+G3*(A2+X4*C6)+G4*(A1+X4*B6)
780LETK1=(A7*A8+D7*D8)/(A8*A8+D8*D8)
790LETK2=(A8*D7-A7*D8)/(A8*A8+D8*D8)
800GØTØ870
810 LET A5=X-X1
820 LET B5=-Y1
830 LET C5=X+X1
840 LET D5=Y1
850 LET K1=(A5*C5+B5*D5)/(C5*C5+D5*D5)
860 LET K2=(C5*B5-A5*D5)/(C5*C5+D5*D5)
870 IF X*L2>30 THEN 910
880 LET G=EXP(-2*X*L1)+EXP(-2*X*L2)-2*EXP(-X*(L1+L2))
890 LETG3=EXP(-X*(L2-L1))-1
900 GØ TØ 930
910 LET G=EXP(-X*L1)
920 LET G3=-1
930 LET I6=I6+S3*G*K1/(2*X)
940 LET I8=I8+S3*G*K2/(2*X)
950 LET I9=I9+S3*(G3/X+L2-L1)
960 NEXT X
970 LETB1=B2
980 LET B2=B2+S2
990 LET Q3=X+S1/2
1000 LET I7=I9+I6
1010 PRINT Q3,I9,I7,I8
1020 IF X < 3 THEN 260
1030 LET S1=5E-2
1040 IF X<10 THEN 260
1050 LET S1=.1
1060LETS2=20
1070 IF X<35 THEN 260
1080 PRINT "NØRMALIZED IMAG PART";I7/I9,"NØRMALIZED REAL PART";-I8/I9
1090 GØTØ 1250
1100 IF Z>5 THEN1190
1110 LETL5=INT(2*Z)+3
1120 LETF1=.5*Q1*Q1*Z
1130 LET F2=F1/3
1140 FØRN=1TØL5
1150 LETF1=-F1*.250*Z*Z/(N*N+N)
1160 LETF2=F2+F1/(2*N+3)
1170 NEXTN
1180 GØTØ 1240
1190 LET Q1=(((-188.1357/Z+109.1142)/Z-23.79333)/Z+2.050931)/Z
1200 LET Q1=((Q1-.1730503)/Z+.7034845)/Z-.064109E-3
1210 LET Q2=(((-5.817517/Z+2.105874)/Z-.6896196)/Z+.4952024)/Z
1220 LET Q2=(Q2-.187344E-2)/Z+.7979095
1230 LET F2=(1-SQR(Z)*(Q2*CØS(Z-PI/4)-Q1*SIN(Z-PI/4)))/(X*X)
1240 RETURN
1250 END
```

REFLECTION-TYPE COIL ABOVE A SINGLE CONDUCTING PLANE

This type of coil system is used with the phase-sensitive eddy-current instrument[4,5] and consists of a large driver coil surrounding small pickup coils at each end, wound in opposition to each other. Typical uses for this coil arrangement are the measurement of conductivity in samples of effectively infinite thickness and clad or plate thickness in samples of effectively finite thickness. This section contains programs written for a reflection-type coil above a single conducting plane.

Magnitude and Phase of Induced Voltage

Discussion of RFLM

This program is designed to calculate the variation with conductivity, with lift-off set, of the phase shift of the voltage induced in two oppositely wound pickup coils of the same size by the current in a large driver coil above a conducting plane of effectively infinite thickness (at least four coil diameters or skin depths, whichever is smaller). The pickup coils must be identical, equidistant from the respective ends of the driver coil, and be within its length. They must also be coaxial with the driver coil.

The program calculates the magnitude and phase of the induced voltage at 15 points on a 3×5 lattice (5 values of lift-off and 3 values of conductivity). This allows one to examine the sensitivity to lift-off variations as well as to conductivity variations.

To use this program, one must first divide all dimensions by the mean radius of the driver coil. The results will, of course, be dimensionless and will be referred to as being "normalized." The product of the angular frequency of the driving current, the permeability, the conductivity, and the square of the mean radius of the driver coil must be calculated for the conductor. Let this product be denoted by $\omega\mu\sigma\bar{r}^2$.

---

[4] C. V. Dodd, Mater. Evaluation 22(6), 260–263 (1964).

[5] C. V. Dodd, Mater. Evaluation 26(3), 33–36 (1968).

Once these calculations have been made, one need only type the following lines into the program: (Note: Parentheses are not typed.)

20 LET R1 = (numerical value of normalized inner radius of driver)

30 LET R2 = (numerical value of normalized outer radius of driver)

40 LET R3 = (numerical value of normalized inner radius of pickups)

50 LET R4 = (numerical value of normalized outer radius of pickups)

60 LET L6 = (numerical value of normalized minimum lift-off)

70 LET L2 = (numerical value of normalized lift-off increment)

80 LET L3 = (numerical value of normalized length of driver coil)

90 LET L4 = (numerical value of normalized length of pickup coils)

100 LET L5 = (numerical value of normalized distance of pickup coils from their respective ends of the driver coil)

110 LET M1 = (numerical value of $\omega\mu\sigma\overline{r}^2$)

130 LET U1 = (numerical value of relative permeability of conducting region)

140 LET M9 = (numerical value of fractional change in conductivity)

The program may now be run.

The print-out by the computer will have the following format:

```
R1 = (R1)                R2 = (R2)          DRIVER LENGTH IS (L3)
R3 = (R3)                R4 = (R4)          PICKUP LENGTH IS (L4)
M1 = (M1)                U1 = (U1)          PICKUPS RECESSED (L5)
M VARIATION IS + -(100*M9) PERCENT
ZERO LIFT-OFF IS (L6)
VOLTAGE/PHASE/PHASE WITH DISCRIMINATOR SET
DISCRIMINATOR VOLTAGE IS (V1)
(L6)      (L6 + L2)     (L6 + 2*L2)      (L6 + 3*L2)      (L6 + 4*L2)
------    ------        ------           ------           ------
------    ------        ------           ------           ------
------    ------        ------           ------           ------

------    ------        ------           ------           ------
------    ------        ------           ------           ------
------    ------        ------           ------           ------

------    ------        ------           ------           ------
------    ------        ------           ------           ------
------    ------        ------           ------           ------
PHASE SHIFT ------  LIFT-OFF ------
% OF RANGE  ------  % OF TOTAL ------
```

The various symbols enclosed in parentheses are used to indicate that the numerical value of the symbol will be printed.

There are five columns of data, one under each value of lift-off. Each column is divided into three sections of three lines each. These sections correspond, from top to bottom, to the three values (−100*M9, nominal, and +100*M9, percent) of conductivity. The three lines in each section are, from top to bottom, the magnitude of the induced voltage divided by the product of frequency, driver current, number of turns on driver coil, number of turns on a pickup coil, and driver coil mean radius in meters; the phase of the induced voltage (in radians); and the phase shift between the induced voltage and a constant value which is taken to be the discriminator set point of the phase-sensitive eddy-current instrument (see DISC program, p. 77).

The last two lines of the print-out give the PHASE SHIFT, which is the phase shift due to the specified conductivity change; the LIFT-OFF, which is the phase shift due to the specified lift-off variation; the % OF RANGE, which is the LIFT-OFF divided by the PHASE SHIFT, multiplied by 100; and the % OF TOTAL, which is the % OF RANGE, multiplied by the total conductivity variation (2*M9).

The example below is presented as an additional aid to those who wish to use this program.

Sample Calculation of RFLM

Let us suppose we wish to measure the conductivity of a metal plate using a reflection-type coil arrangement in the phase-sensitive eddy-current instrument. The driver coil is assumed to be 0.500 in. long with inner and outer radii of 0.200 and 0.300 in., respectively. The pickup coils are assumed to be 0.200 in. long with inner and outer radii of 0.100 and 0.150 in., respectively, and are mounted flush with the ends of the driver. The conductor is taken to be a plate of stainless steel of effectively infinite thickness (at least four coil diameters or skin depths, whichever is smaller) whose conductivity may vary by ±10%. The driving current frequency is assumed to be 100 kHz and the minimum lift-off 0.025 in. The lift-off increment is taken to be 0.0125 in.

First, we determine the mean coil radius to be 0.250 in., so that

Normalized inner radius of driver coil = 0.200/0.250 = 0.800
Normalized outer radius of driver coil = 0.300/0.250 = 1.200
Normalized inner radius of pickup coil = 0.100/0.250 = 0.400
Normalized outer radius of pickup coil = 0.150/0.250 = 0.6
Normalized length of driver coil = 0.500/0.250 = 2.000
Normalized length of pickup coil = 0.200/0.250 = 0.800
Normalized length of pickup coils from the ends of the driver coil = 0
Normalized minimum lift-off = 0.025/0.250 = 0.100
Normalized increment of lift-off = 0.0125/0.250 = 0.050

Furthermore,

Angular frequency of driving current = $2\pi \times 100{,}000\ \mathrm{sec}^{-1}$
Permeability of stainless steel conductor = $4\pi \times 10^{-7}$ h/m
Relative permeability of conductor = 1
Nominal conductivity of stainless steel = 1.3333×10^{6} mhos/m

Thus,

$$\omega\mu\sigma\bar{r}^2 = 42.45$$

This information is typed into the program in the following manner:

```
20 LET R1 = 0.8
30 LET R2 = 1.2
40 LET R3 = 0.4
50 LET R4 = 0.6
60 LET L6 = 0.1
70 LET L2 = 0.05
80 LET L3 = 2.0
90 LET L4 = 0.8
100 LET L5 = 0
110 LET M1 = 42.45
130 LET U1 = 1
140 LET M9 = 0.1
```

The program is now run with the following results:

```
R1 = .8        R2 = 1.2        DRIVER LENGTH IS 2
R3 = .4        R4 = .6         PICKUP LENGTH IS .8
M1 = 42.45     U1 = 1          PICKUPS RECESSED 0
M VARIATION IS +-10. PERCENT
ZERO LIFT-OFF IS .1
VOLTAGE/PHASE/PHASE WITH DISCRIMINATOR SET

DISCRIMINATOR VOLTAGE IS -1.22406E-8
.1            .15           .2            .25           .3
3.49406E-7    3.00479E-7    2.59214E-7    2.24378E-7    1.94912E-7
1.9137        1.90723       1.90001       1.89237       1.88451
.017222       1.64576E-2    1.57363E-2    1.54316E-2    1.58309E-2

3.56237E-7    3.06256E-7    2.64095E-7    2.28504E-7    1.98406E-7
1.89715       1.89118       1.88444       1.87723       1.86978
0            -3.57488E-4   -7.15358E-4   -6.93439E-4   -2.85218E-9

3.62192E-7    3.11295E-7    2.68355E-7    2.32107E-7    2.01457E-7
1.88275       1.87722       1.87088       1.86405       1.85697
-1.49614E-2  -1.49674E-2  - .015009     - .014701     -1.37485E-2
PHASE SHIFT  3.21834E-2    LIFT-OFF  1.79043E-3
% OF RANGE  5.5632          % OF TOTAL 1.11264
```

from which we see that the phase shift due to a 20% change in conductivity is 3.21834×10^{-2} radians, while that due to lift-off is 1.79043×10^{-3} radians, the latter phase shift being 5.5632% of the former and 1.11264% of the total.

RFLM Program

```
10 REM          RFLM                    5/7/69
20R1=.75
30R2=1.25
40R3=.35
50R4=.7
60 L6=0
70L2=.05
80L3=.4
90L4=.1
100L5=.1
110 M1=45.48
120 M=M1
130 LET U1=1
140M9=.025
150 PRINT "R1=";R1, "R2=";R2, "DRIVER LENGTH IS";L3
160 PRINT "R3=";R3, "R4=";R4, "PICKUP LENGTH IS";L4
170 PRINT"M1=";M1,"U1=";U1,"PICKUPS RECESSED";L5
180PRINT"M VARIATIØN IS +-";100*M9;"PERCENT"
190 PRINT"ZERØ LIFT-ØFF IS";L6
200PRINT"VØLTAGE/PHASE/PHASE WITH DISCRIMINATØR SET"
210 LET S1=1E-2
220 LET S2=5
230FØRI=1TØ3
240 FØR J=1 TØ 5
250R(I,J)=0
```

```
260I(I,J)=0
270 NEXT J
280NEXTI
290 LET B1=0
300 LET B2 =S2
310 FØR X = B1 +S1/2 TØ B2 STEP S1
320 LET Z=R2*X
330 LET Q1=R2
340 GØSUB 1160
350 LET I2=F2
360 LET Z=R1*X
370 LET Q1=R1
380 GØSUB 1160
390 LET I1=F2
400 LET Z=R4*X
410 LET Q1=R4
420 GØSUB 1160
430 LET J2=F2
440 LET Z=R3*X
450 LET Q1=R3
460 GØSUB 1160
470 LET J1=F2
480 LET S3=S1*(I2-I1)*(J2-J1)
490 IF X*L3>50 THEN 530
500 LET G=EXP(-X*L5)+EXP(-X*(L3-L5))-EXP(-X*(L3-L4-L5))-EXP(-X*(L5+L4))
510 LET G5=EXP(-X*L3)-1
520 GØ TØ 550
530 LET G=EXP(-X*L5)*(1-EXP(-X*L4))
540 LET G5=-1
550FØRI=1TØ3
560M1=M*(1+(I-2)*M9)
570LETX1=.707106781*SQR(SQR(X*X*X*X+M1*M1)+X*X)/U1
580LETY1=.707106781*SQR(SQR(X*X*X*X+M1*M1)-X*X)/U1
590D5=X*X+2*X*X1+X1*X1+Y1*Y1
600K(I)=(X*X-X1*X1-Y1*Y1)/D5
610N(I)=-2*Y1*X/D5
620FØRJ=1TØ5
630L=(J-1)*L2+L6
640LETR(I,J)=R(I,J)+S3*K(I)*G*G5*EXP(-2*X*L)
650LETI(I,J)=I(I,J)+S3*N(I)*G*G5*EXP(-2*X*L)
660NEXTJ
670NEXTI
680NEXTX
690 LET B1=B2
700 LET B2=B2+S2
710 IF X < 3 THEN 310
720 LET S1=5E-2
730 IF X<9 THEN 310
740 LET S1=.1
750 IF X<19 THEN 310
760 PRINT
770 PRINT
780FØRI=1TØ3
790 FØR J=1 TØ 5
800LETM(I,J)=SQR(R(I,J)↑2+I(I,J)↑2)*2.4805E-5/((R2-R1)*(R4-R3)*L3*L4)
810LETP(I,J)=ATN(-R(I,J)/I(I,J))
820IFI(I,J)<ØTHEN850
830LETP(I,J)=P(I,J)+PI
840 PRINT:STØRE:M(I,J),P(I,J)
850 NEXT J
```

```
860NEXTI
870LETH1=M(2,1)
880LETH2=M(2,5)
890LETH5=P(2,1)
900LETH6=P(2,5)
910GØSUB1310
920 PRINT L6,L6+L2,L6+2*L2,L6+3*L2,L6+4*L2
930FØRI=1TØ3
940FØRJ=1TØ5
950Q1=M(I,J)
960Q2=P(I,J)
970GØSUB1360
980Y(I,J)=P
990NEXTJ
1000PRINT
1010PRINTM(I,1),M(I,2),M(I,3),M(I,4),M(I,5)
1020PRINTP(I,1),P(I,2),P(I,3),P(I,4),P(I,5)
1030PRINTY(I,1),Y(I,2),Y(I,3),Y(I,4),Y(I,5)
1040NEXTI
1050Q1=Y(1,1)
1060Q2=Q1
1070FØRJ=2TØ5
1080 IF Y(1,J)<Q1 THEN 1100
1090Q1=Y(1,J)
1100 IF Y(1,J)>Q2 THEN 1120
1110 Q2=Y(1,J)
1120 NEXTJ
1130Q3=Y(1,1)-Y(3,1)
1140PRINT"PHASE SHIFT";Q3;"LIFT-ØFF";Q1-Q2;"%";(Q1-Q2)*200*M9/Q3
1150 GØ TØ 1380
1160IFZ>5THEN1250
1170 LET L9=INT(2*Z)+3
1180 LET F1=.5*Q1*Q1*Q1
1190 LET F2=F1/3
1200 FØR N=1TØL9
1210 LETF1=-F1*.250*Z*Z/(N*N+N)
1220 LETF2=F2+F1/(2*N+3)
1230 NEXTN
1240 GØTØ 1300
1250 LET Q1=(((-188.1357/Z+109.1142)/Z-23.79333)/Z+2.050931)/Z
1260 LET Q1=((Q1-.1730503)/Z+.7034845)/Z-.064109E-3
1270 LET Q2=(((-5.817517/Z+2.105874)/Z-.6896196)/Z+.4952024)/Z
1280 LET Q2=(Q2-.187344E-2)/Z+.7979095
1290 LETF2=(1-SQR(Z)*(Q2*CØS(Z-PI/4)-Q1*SIN(Z-PI/4)))/(X*X*X)
1300 RETURN
1310 LET Ø1=ATN((H2*SIN(H6)-H1*SIN(H5))/(H1*CØS(H5)-H2*CØS(H6)))
1320 IFH1*CØS(H5)-H2*CØS(H6)>ØTHEN1340
1330 LETØ1=Ø1-3.14159265
1340 LETV1=H1*SIN(Ø1+H5)
1350PRINT"DISCRIMINATØR VØLTAGE IS";V1
1360 LET P=Ø1-ATN(V1/SQR(Q1*Q1-V1*V1))+Q2
1370RETURN
1380 END
```

Normalized Impedances of Reflection-Type Coils

Discussion of MREP

This program, which is designed to provide input data for the PHASEN program (see section on "Phase-Sensitive Eddy-Current Instrument"), simultaneously calculates the normalized impedances of driver and pickup coils in a reflection-type coil arrangement above a conducting plane of effectively infinite thickness (at least four coil diameters or skin depths, whichever is smaller).

The program calculates the normalized impedance of each coil at 5 points on a 1×5 lattice consisting of 5 values of lift-off and 1 value of conductivity. It is then printed three times on the file. This was done in the interest of saving computer time, since it was found that the error introduced into the PHASEN program by neglecting a 10% change in conductivity was of the order of 1% or less.

To use this program, one must first divide all dimensions by the mean radius of the driver coil. The results will, of course, be dimensionless and will be referred to as being "normalized." The product of the angular frequency of the driving current, the permeability, the conductivity, and the square of the mean radius of the driver coil must be calculated for the conductor. Let this product be denoted by $\omega\mu\sigma\bar{r}^2$.

Once these calculations have been made, one need only type the following lines into the program. (Note: Parentheses are not typed.)

20 LET R1 = (numerical value of normalized inner radius of driver coil)

30 LET R2 = (numerical value of normalized outer radius of driver coil)

40 LET R3 = (numerical value of normalized inner radius of pickup coils)

50 LET R4 = (numerical value of normalized outer radius of pickup coils)

60 LET L0 = (numerical value of normalized length of driver coil)

70 LET L1 = (numerical value of normalized length of pickup coils)

80 LET L2 = (numerical value of normalized distance of pickup coils from the ends of the driver coil)

90 LET L3 = (numerical value of normalized minimum lift-off)

100 LET L4 = (numerical value of normalized increment of lift-off)

130 LET M1 = (numerical value of $\omega\mu\sigma\bar{r}^2$)

140 LET U1 = (numerical value of relative permeability of conductor)

The program may now be run.

The print-out by the computer will have the following format:

```
R1 = (R1)                R2 = (R2)              DRIVER LENGTH IS (L0)
R3 = (R3)                R4 = (R4)              PICKUP LENGTH IS (L1)
M1 = (M1)                U1 = (U1)              PICKUPS RECESSED (L2)
                 NOR REAL PART---NOR IMAG PART

                         DRIVER COIL
------          ------        ------        ------        ------
------          ------        ------        ------        ------

                        BOTTOM PICKUP
------          ------        ------        ------        ------
------          ------        ------        ------        ------

                         TOP PICKUP
------          ------        ------        ------        ------
------          ------        ------        ------        ------
```

The various symbols enclosed in parentheses indicate that the numerical value of the symbol will be printed.

The top line of data in each block is the real part of the normalized impedance, calculated for each of the five lift-off values, and the bottom line is the imaginary part.

The example below is presented as an additional aid to those who wish to use this program.

Sample Calculation of MREP

As stated previously, this program is designed to be used in conjunction with the PHASEN program; thus, the example below is also referenced in that program.

Suppose it is desired to calculate the real and imaginary parts of the normalized impedances of all three coils in a reflection-type coil arrangement above a stainless steel plate of effectively infinite thickness (at least four coil diameters or skin depths, whichever is smaller).

The driver coil is assumed to be 0.5 in. long with inner and outer radii of 0.200 and 0.300 in., respectively. The pickup coils are assumed to be 0.200 in. long with inner and outer radii of 0.100 and 0.150 in., respectively, and are flush with the ends of the driver coil. The minimum distance from the stainless steel plate will be taken to be 0.025 in. The lift-off increment will be 0.0125 in. and the frequency of the driving current 100 kHz.

First, we determine the mean coil radius to be 0.250 in., so that

Normalized inner radius of driver coil = 0.200/0.250 = 0.800
Normalized outer radius of driver coil = 0.300/0.250 = 1.200
Normalized inner radius of pickup coil = 0.100/0.250 = 0.400
Normalized outer radius of pickup coil = 0.150/0.250 = 0.600
Normalized length of driver coil = 0.500/0.250 = 2.000
Normalized length of pickup coil = 0.200/0.250 = 0.800
Normalized distance of pickup coils from ends of driver coil = 0
Normalized minimum lift-off = 0.025/0.250 = 0.100
Normalized increment of lift-off = 0.0125/0.250 = 0.050

Furthermore,

Angular frequency of driving current = $2\pi \times 100{,}000\ \mathrm{sec}^{-1}$
Permeability of stainless steel conductor = $4\pi \times 10^{-7}$ h/m
Relative permeability of conductor = 1
Conductivity of stainless steel = 1.3333×10^{6} mhos/m

Thus,

$$\omega\mu\sigma\bar{r}^2 = 42.45$$

This information is now typed into the program in the following format:

```
20 LET R1 = 0.8
30 LET R2 = 1.2
40 LET R3 = 0.4
50 LET R4 = 0.6
60 LET L0 = 2.0
70 LET L1 = 0.8
80 LET L2 = 0
```

```
90 LET L3 = 0.1
100 LET L4 = 0.05
130 LET M1 = 42.45
140 LET U1 = 1
```

The program is now run with the following results:

```
R1 = .8        R2 = 1.2     DRIVER LENGTH IS 2
R3 = .4        R4 = .6      PICKUP LENGTH IS .8
M1 = 42.45     U1 = 1       PICKUPS RECESSED 0
                     NOR REAL PART --- NOR IMAG PART

                          DRIVER COIL
3.15732E-2    2.72132E-2    2.35718E-2    2.05092E-2    1.79181E-2
.878171       .891266       .902604       .912465       .921077

                         BOTTOM PICKUP
3.83668E-2    2.96496E-2    2.32058E-2    1.83751E-2    1.47074E-2
.920018       .934261       .945423       .95427        .961356

                          TOP PICKUP
7.11078E-4    6.39095E-4    5.75954E-4    5.20388E-4    4.71337E-4
.996022       .996327       .996603       .996851       .997076
```

Thus, for example, the real part of the normalized impedance of the bottom pickup coil, calculated for the minimum lift-off, is 3.83668E-2; and the imaginary part is 0.920018.

MREP Program

```
10 REM              MREP                VERSIØN 04/02/70
20 R1=.75
30 R2=1.25
40 R3=.35
50 R4=.7
60 L0=.6
70 L1=.2
80 L2=0
90 L3=0
100 L4=.05
110 L8=L3+L2
120 L6=L3+L0-L1-L2
130 M1=1.30921
140 U1=1
150 PRINT"R1=";R1,"R2=";R2,"DRIVER LENGTH IS";L0
160 PRINT"R3=";R3,"R4=";R4,"PICKUP LENGTH IS";L1
170 PRINT"M1=";M1,"U1=";U1,"PICKUPS RECESSED";L2
180 LET S1=1E-2
190 LET S2=5
200 FØR I=0 TØ 2
```

```
210 J(I)=0
220 N(I)=0
230 K(I)=0
240 M(I)=0
250 P(I)=0
260 Q(I)=0
270 NEXT I
280 I9=0
290 I0=0
300 LET B1=0
310 LET B2 =S2
320 FØR X = B1 +S1/2 TØ B2 STEP S1
330 LET Z=R2*X
340 LET Q1=R2
350 GØSUB 1230
360 LET I2=F2
370 LET Z=R1*X
380 LET Q1=R1
390 GØSUB 1230
400 LET I1=F2
410 LET S3=S1*(I2-I1)↑2/X
420 Z=R4*X
430 Q1=R4
440 GØ SUB 1230
450 J2=F2
460 Z=R3*X
470 Q1=R3
480 GØ SUB 1230
490 J1=F2
500 S4=S1*(J2-J1)↑2/X
510 IF X*L0>30 THEN 550
520 G1=EXP(-2*X*L0)+1-2*EXP(-X*L0)
530 G2=EXP(-X*L0)-1
540 GØ TØ 570
550 G1=1
560 G2=-1
570 IF X*L1>30 THEN 610
580 G3=EXP(-2*X*L1)+1-2*EXP(-X*L1)
590 G4=EXP(-X*L1)-1
600 GØ TØ 630
610 G3=1
620 G4=-1
630 IF X*L3>15 THEN 860
640 LET X1=.707107*(SQR(SQR(X*X*X*X+M1*M1)+X*X))/U1
650 LET Y1=.707107*(SQR(SQR(X*X*X*X+M1*M1)-X*X))/U1
660 D5=(X+X1)*(X+X1)+Y1*Y1
670 K1=((X-X1)*(X+X1)-Y1*Y1)/D5
680 K2=-2*X*Y1/D5
690 FØR I=0 TØ 2
700 Z1=2*X*(L3+L4*I)
710 IF Z1>30 THEN 860
720 Ø1=EXP(-Z1)
```

```
730 J(I)=J(I)+S3*G1*Ø1*K1/(2*X)
740 N(I)=N(I)+S3*G1*Ø1*K2/(2*X)
750 Z2=2*X*(L8+L4*I)
760 IF Z2>30 THEN 850
770 Ø2=EXP(-Z2)
780 K(I)=K(I)+S4*G3*Ø2*K1/(2*X)
790 M(I)=M(I)+S4*G3*Ø2*K2/(2*X)
800 Z3=2*X*(L6+L4*I)
810 IF Z3>30 THEN 850
820 Ø3=EXP(-Z3)
830 P(I)=P(I)+S4*G3*Ø3*K1/(2*X)
840 Q(I)=Q(I)+S4*G3*Ø3*K2/(2*X)
850 NEXT I
860 I9=I9+S3*(G2/X+L0)
870 I0=I0+S4*(G4/X+L1)
880 NEXT X
890 LETB1=B2
900 LET B2=B2+S2
910 IF X < 3 THEN 320
920 LET S1=5E-2
930 IF X<10 THEN 320
940 LET S1=.1
950LETS2=20
960 IF X<35 THEN 320
970 FØR I=0 TØ 2
980 B(I)=I9+J(I)
990 C(I)=I0+K(I)
1000 D(I)=I0+P(I)
1010 NEXT I
1090 PRINT"                    NØR REAL PART---NØR IMAG PART"
1100 PRINT
1110 PRINT"                                DRIVER CØIL"
1120 PRINT -N(0)/I9,-N(1)/I9,-N(2)/I9
1130 PRINT B(0)/I9,B(1)/I9,B(2)/I9
1140 PRINT
1150 PRINT"                               BØTTØM PICKUP"
1160 PRINT -M(0)/I0,-M(1)/I0,-M(2)/I0
1170 PRINT C(0)/I0,C(1)/I0,C(2)/I0
1180 PRINT
1190 PRINT"                                TØP PICKUP"
1200 PRINT -Q(0)/I0,-Q(1)/I0,-Q(2)/I0
1210 PRINT D(0)/I0,D(1)/I0,D(2)/I0
1220 GØ TØ 1380
1230 IF Z>5 THEN1320
1240 LETL5=INT(2*Z)+3
1250 LETF1=.5*Q1*Q1*Z
1260 LET F2=F1/3
1270 FØRN=1TØL5
1280 LETF1=-F1*.250*Z*Z/(N*N+N)
1290 LETF2=F2+F1/(2*N+3)
1300 NEXTN
1310 GØTØ 1370
1320 LET Q1=(((-188.1357/Z+109.1142)/Z-23.79333)/Z+2.050931)/Z
1330 LET Q1=((Q1-.1730503)/Z+.7034845)/Z-.064109E-3
1340 LET Q2=(((-5.817517/Z+2.105874)/Z-.6896196)/Z+.4952024)/Z
1350 LET Q2=(Q2-.187344E-2)/Z+.7979095
1360 LET F2=(1-SQR(Z)*(Q2*CØS(Z-PI/4)-Q1*SIN(Z-PI/4)))/(X*X)
1370 RETURN
1380 END
```

REFLECTION-TYPE COIL ABOVE A TWO-CONDUCTOR PLANE

This type of coil system is used with the phase-sensitive eddy-current instrument[6,7] and consists of a large driver coil surrounding small pickup coils at each end, wound in opposition to each other.

The programs in this section calculate the magnitude and phase of the induced voltage (RFLCT), the normalized impedances of the coils (CLAD1), the phase shift of the induced voltage with "lift-off" set (DISC), the phase shift over a range of cladding thickness values with "lift-off" automatically set (RFLC), the change in the magnitude and phase of the induced voltage due to a defect in the cladding material (RFDFT), the change in the magnitude and phase of the induced voltage due to a defect located at any point in a lattice in the cladding material (RFDFL2), the change in phase of the induced voltage due to a defect located at any point in a lattice in the cladding material with the "lift-off" set (BASREAD), and the change in the magnitude and phase of the induced voltage due to a defect in the base material (RFDFTB).

These programs are useful in optimizing the coil dimensions and the operating frequency for reflection-type coils.

Magnitude and Phase of Induced Voltage

Discussion of RFLCT

This program is designed to calculate the differences in magnitude and phase of the "voltages" induced in two oppositely wound pickup coils of the same size by the current in a large driver coil above a two-layered conductor. The physical situation is shown in Fig. 5. The pick-up coils must be identical, equidistant from the respective ends of the driver coil, and be within its length. They must also be coaxial with the driver coil. The two conducting layers may have different permeabilities and electrical conductivities.

---

[6] C. V. Dodd, Mater. Evaluation 22(6), 260–263 (1964).

[7] C. V. Dodd, Mater. Evaluation 26(3), 33–36 (1968).

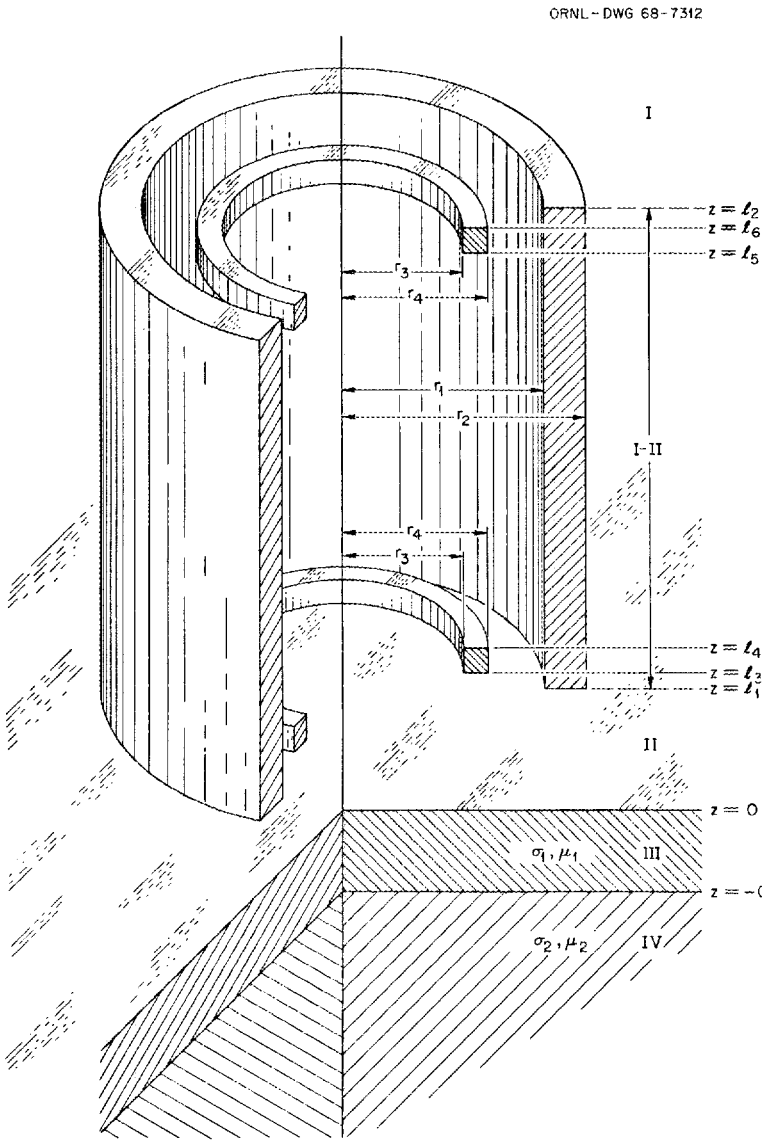

Fig. 5. A Reflection-Type Coil Above a Two-Conductor Plane.

To use this program, one must first divide all dimensions by the mean radius of the driver coil. The results will, of course, be dimensionless and will be referred to as being "normalized." The product of the angular frequency of the driving current, the permeability, the conductivity, and the square of the mean radius of the driver coil must be calculated for each conductor. Let this product be denoted by $\omega\mu_1\sigma_1\overline{r}^2$ for the upper layer and by $\omega\mu_2\sigma_2\overline{r}^2$ for the lower one.

Once these calculations have been made, one need only type the following lines into the program. (Note: Parentheses are not typed.)

20 LET R1 = (numerical value of normalized inner radius of driver)

30 LET R2 = (numerical value of normalized outer radius of driver)

40 LET R3 = (numerical value of normalized inner radius of pickups)

50 LET R4 = (numerical value of normalized outer radius of pickups)

60 LET L = (numerical value of normalized lift-off)

70 LET L2 = (numerical value of normalized length of driver)

80 LET L6 = (numerical value of normalized length of pickups)

90 LET L5 = (numerical value of normalized distance of pickups from ends of driver)

100 LET M1 = (numerical value of $\omega\mu_1\sigma_1\bar{r}^2$)

Note: If the conductivity of the upper conductor is zero, one must type two additional lines:

440 LET X1 = X

450 LET Y1 = 0

110 LET U1 = (numerical value of relative permeability of upper conductor)

120 LET M2 = (numerical value of $\omega\mu_2\sigma_2\bar{r}^2$)

Note: If the conductivity of the lower conductor is zero, one must type two additional lines:

470 LET X2 = X

480 LET Y2 = 0

130 LET U2 = (numerical value of relative permeability of lower conductor)

140 LET C = (numerical value of normalized thickness of upper conductor)

The program may now be run.

The print-out by the computer will have the following format:

```
R1 = (R1)        R2 = (R2)        DRIVER LENGTH IS (L2)
R3 = (R3)        R4 = (R4)        PICKUP LENGTH IS (L6)
PICKUPS ARE RECESSED (L5)         CLAD THICKNESS IS [C]
LIFT-OFF = (L)  ,  M1 = (M1)  ,  U1 = (U1)  ,  M2 = (M2) ,  U2 = (U2)
X                 MAGNITUDE            PHASE
5.                 ------              ------
10.                ------              ------
15.                ------              ------
20.                ------              ------
   VOLTAGE/FINN'R(BAR) = ------
```

The various symbols enclosed in parentheses are used here to indicate that the numerical value of the symbol will be printed. The first column, headed "X," is the upper limit of the integration being performed by the computer. The other two columns have self-explanatory headings. The last line printed is the magnitude of the peak (or root mean square) voltage difference divided by the product of the frequency of the driving current, the magnitude of the peak (or root mean square) current, the number of turns on the driver coil, the number of turns on a pickup coil, and the mean radius of the driver coil in meters.

The example below is presented for additional aid to those who wish to use this program.

Sample Calculation of RFLCT

Let us suppose that we wish to know the difference in the voltages induced in two pickup coils positioned inside the driver coil and flush with its ends. The driver coil is assumed to be 2 in. long with inner and outer radii of 0.200 and 0.300 in., respectively, while the pickup coils are assumed to be 0.200 in. long with inner and outer radii of 0.100 and 0.150 in., respectively. The conductors are taken to be 0.010 in. of copper clad on an effectively infinite thickness of aluminum (at least four coil diameters or skin depths, whichever is smaller). The driving current frequency is assumed to be 5 kHz; the lift-off 0.005 in.

First we determine the mean coil radius to be 0.250 in., so that

Normalized inner radius of driver coil = 0.200/0.250 = 0.8
Normalized outer radius of driver coil = 0.300/0.250 = 1.2
Normalized inner radius of pickup coil = 0.100/0.250 = 0.4
Normalized outer radius of pickup coil = 0.150/0.250 = 0.6
Normalized length of driver coil = 2.000/0.250 = 8
Normalized length of pickup coil = 0.200/0.250 = 0.8
Normalized lift-off = 0.005/0.250 = 0.02
Normalized distance of pickup from ends of driver coil = 0
Normalized thickness of copper = 0.010/0.250 = 0.04

Furthermore,

Angular frequency of driving current = $2\pi \times 5000$ sec^{-1}

Permeability of <u>both</u> conductors = $4\pi \times 10^{-7}$ h/m

Relative permeability of both conductors = 1

Conductivity of copper = 5.77×10^{7} mhos/m

Conductivity of aluminum = 2.86×10^{7} mhos/m

Thus,

$$\omega\mu_1\sigma_1\overline{r}^2 = 91.91$$
$$\omega\mu_2\sigma_2\overline{r}^2 = 45.48$$

This information is now typed into the program using the following format:

```
20 LET R1 = 0.8
30 LET R2 = 1.2
40 LET R3 = 0.4
50 LET R4 = 0.6
60 LET L = 0.02
70 LET L2 = 8
80 LET L6 = 0.8
90 LET L5 = 0
100 LET M1 = 91.91
110 LET U1 = 1
120 LET M2 = 45.48
130 LET U2 = 1
140 LET C = 0.04
```

The program is now run with the following results:

```
R1 = 0.8          R2 = 1.2    DRIVER LENGTH IS 8
R3 = 0.4          R4 = 0.6    PICKUP LENGTH IS 0.8
PICKUPS ARE RECESSED 0        CLAD THICKNESS IS 0.4E-01
LIFT-OFF = 0.2E-01    , M1 = 91.91    ,U1 = 1    ,M2 = 45.48    ,U2 = 1
X                     MAGNITUDE          PHASE
5                     0.3806977E-02      1.8412638
10                    0.3764764E-02      1.8319976
15                    0.3765228E-02      1.8322294
20                    0.3765232E-02      1.8322326
   VOLTAGE/FINN'R(BAR) = 0.1824152E-06
```

from which we see that the phase of the voltage difference is 1.8322326 (i.e., the phase value for X = 20). The actual magnitude of the voltage

difference is obtained by multiplying the last line by the frequency of the driving current (5000), the magnitude of the current, the number of turns on the driver coil, the number of turns on a pickup coil, and the mean radius of the driver coil in meters.

RFLCT Program

```
10 REM              RFLCT           VERSIØN  02/04/70
20 LET R1=.8
30 LET R2=1.2
40 LET R3=.4
50 LET R4=.6
60 LET L=.02
70 LET L2=8
80 LET L6=.8
90 LET L5=0
100 LET M1=91.91
110 LET U1=1
120 LET M2=45.48
130 LET U2=1
140 LET C=.04
150 PRINT "R1=";R1, "R2=";R2, "DRIVER LENGTH IS";L2
160 PRINT "R3=";R3, "R4=";R4, "PICKUP LENGTH IS";L6
170 PRINT "PICKUPS ARE RECESSED";L5, "CLAD THICKNESS IS";C
180 PRINT"LIFT ØFF=";L",M1=";M1",U1=";U1",M2=";M2",U2=";U2
190 PRINT "X", "MAGNITUDE", "PHASE"
200 LET S1=1E-2
210 LET S2=5
220 LET I6=0
230 LET I8=0
240 LET B1=0
250 LET B2 =S2
260 FØR X = B1 +S1/2 TØ B2 STEP S1
270 LET Z=R2*X
280 LET Q1=R2
290 GØSUB 920
300 LET I2=F2
310 LET Z=R1*X
320 LET Q1=R1
330 GØSUB 920
340 LET I1=F2
350 LET Z=R4*X
360 LET Q1=R4
370 GØSUB 920
380 LET J2=F2
390 LET Z=R3*X
400 LET Q1=R3
410 GØSUB 920
420 LET J1=F2
430 LET S3=S1*(I2-I1)*(J2-J1)
440 LETX1=.707106781*SQR(SQR(X*X*X*X+M1*M1)+X*X)/U1
450 LETY1=.707106781*SQR(SQR(X*X*X*X+M1*M1)-X*X)/U1
460 IF X1*C*U1>15 THEN 610
470 LETX2=.707106781*SQR(SQR(X*X*X*X+M2*M2)+X*X)/U2
480 LETY2=.707106781*SQR(SQR(X*X*X*X+M2*M2)-X*X)/U2
490 LET X3=EXP(2*X1*C*U1)
500 LET Y3=CØS(2*Y1*C*U1)
```

```
510 LET Y4=SIN(2*Y1*C*U1)
520 LET A6=(X-X1)*(X1+X2)+Y1*(Y1+Y2)
530 LET A7=(X-X1)*(Y1+Y2)-Y1*(X1+X2)
540 LETA5=(X+X1)*(X1-X2)-Y1*(Y1-Y2)+(A6*Y3-A7*Y4)*X3
550 LET B5=Y1*(X1-X2)+(X+X1)*(Y1-Y2)+(A7*Y3+A6*Y4)*X3
560 LET C6=(X+X1)*(X1+X2)-Y1*(Y1+Y2)
570 LET C7=Y1*(X1+X2)+(X+X1)*(Y1+Y2)
580 LET C5=(X-X1)*(X1-X2)+Y1*(Y1-Y2)+(C6*Y3-C7*Y4)*X3
590 LET D5=(X-X1)*(Y1-Y2)-Y1*(X1-X2)+(C7*Y3+C6*Y4)*X3
600 GØ TØ 650
610 LET A5 =X-X1
620 LET B5=-Y1
630 LET C5=X+X1
640 LET D5=Y1
650 LET K1=(A5*C5+B5*D5)/(C5*C5+D5*D5)
660 LET K2=(C5*B5-A5*D5)/(C5*C5+D5*D5)
670 IF X*L2>50 THEN 710
680 LET G=EXP(-X*L5)+EXP(-X*(L2-L5))-EXP(-X*(L2-L5-L6))-EXP(-X*(L5+L6))
690 LET G5=EXP(-X*L2)-1
700 GØ TØ 730
710 LET G=EXP(-X*L5)*(1-EXP(-X*L6))
720 LET G5=-1
730 LET G6=G*G5*EXP(-2*X*L)
740 LET I6=I6+G6*K1*S3
750 LET I8=I8+G6*K2*S3
760 NEXT X
770 LET B1=B2
780 LET B2=B2+S2
790 LET Q1=SQR(I6*I6+I8*I8)
800 LET Q2=ATN(-I6/I8)
810 IF I8<0 THEN 830
820 LET Q2=Q2+PI
830 PRINT X+S1/2, Q1, Q2
840 IF X < 3 THEN 260
850 LET S1=5E-2
860 IF X<9 THEN 260
870 LET S1=.1
880 IF X<19 THEN 260
890 PRINT "    VØLTAGE/FINN'R(BAR)=";
900 PRINT 2.4805E-5*Q1/((R4-R3)*(R2-R1)*L2*L6)
910 GØ TØ 1070
920 IF Z>5 THEN 1010
930 LET L9=INT(2*Z)+3
940 LET F1=.5*Q1*Q1*Q1
950 LET F2=F1/3
960 FØR N=1TØL9
970 LETF1=-F1*.250*Z*Z/(N*N+N)
980 LETF2=F2+F1/(2*N+3)
990 NEXTN
1000 GØTØ 1060
1010 LET Q1=(((-188.1357/Z+109.1142)/Z-23.79333)/Z+2.050931)/Z
1020 LET Q1=((Q1-.1730503)/Z+.7034845)/Z-.064109E-3
1030 LET Q2=(((-5.817517/Z+2.105874)/Z-.6896196)/Z+.4952024)/Z
1040 LET Q2=(Q2-.187344E-2)/Z+.7979095
1050 LET F2=(1-SQR(Z)*(Q2*CØS(Z-PI/4)-Q1*SIN(Z-PI/4)))/(X*X*X)
1060 RETURN
1070 END
```

Discussion of CLAD1

This program, which is designed to provide input data for the PHASEN program (see section on "Phase-Sensitive Eddy-Current Instrument"), simultaneously calculates the normalized impedances of driver and pickup coils in a reflection-type coil arrangement above a two-layered conducting plane (see Fig. 5, p. 61). The two conducting layers may have different values of conductivity and permeability.

The program calculates the normalized impedance of each coil at 5 points on a 1 × 5 lattice consisting of 5 values of lift-off and 1 value of clad thickness. It is then printed three times on the file. This was done in the interest of saving computer time, since it was found that the error introduced into the PHASEN program by neglecting a 10% change in clad thickness was of the order of 1% or less.

To use this program, one must first divide all dimensions by the mean radius of the driver coil. The results will, of course, be dimensionless and will be referred to as being "normalized." The product of the angular frequency of the driving current, the permeability, the conductivity, and the square of the mean radius of the driver coil must be calculated for each conductor. Let this product be denoted by $\omega\mu_1\sigma_1\bar{r}^2$ for the upper layer and by $\omega\mu_2\sigma_2\bar{r}^2$ for the lower one.

Once these calculations have been made, one need only type the following lines into the program. (Note: Parentheses are not typed.)

20 LET R1 = (numerical value of normalized inner radius of driver coil)

30 LET R2 = (numerical value of normalized outer radius of driver coil)

40 LET R3 = (numerical value of normalized inner radius of pickup coils)

50 LET R4 = (numerical value of normalized outer radius of pickup coils)

60 LET L0 = (numerical value of normalized length of driver coil)

70 LET L1 = (numerical value of normalized length of pickup coils)

80 LET L2 = (numerical value of normalized distance of pickup coils from the ends of the driver coil)

90 LET L3 = (numerical value of normalized minimum lift-off)

100 LET L4 = (numerical value of normalized increment of lift-off)

130 LET M1 = (numerical value of $\omega\mu_1\sigma_1\overline{r}^2$)

Note: If the conductivity of the upper conductor is zero, one must type two additional lines:

680 LET X1 = X

690 LET Y1 = 0

140 LET U1 = (numerical value of relative permeability of upper conductor)

150 LET M2 = (numerical value of $\omega\mu_2\sigma_2\overline{r}^2$)

Note: If the conductivity of the lower conductor is zero, one must type two additional lines:

710 LET X2 = X

720 LET Y2 = 0

160 LET U2 = (numerical value of relative permeability of lower conductor)

170 LET C = (numerical value of normalized clad thickness)

The program may now be run.

The print-out by the computer will have the following format:

```
R1 = (R1)     R2 = (R2)              DRIVER LENGTH IS (LO)
R2 = (R2)     R4 = (R4)              PICKUP LENGTH IS (L1)
M1 = (M1)     U1 = (U1)              PICKUPS RECESSED (L2)
M2 = (M2)     U2 = (U2)              CLAD THICKNESS (C)

                NOR REAL PART --- NOR IMAG PART

                         DRIVER COIL

 -----         -----        -----        -----        -----
 -----         -----        -----        -----        -----

                        BOTTOM PICKUP

 -----         -----        -----        -----        -----
 -----         -----        -----        -----        -----

                          TOP PICKUP

 -----         -----        -----        -----        -----
 -----         -----        -----        -----        -----
```

The various symbols enclosed in parentheses indicate that the numerical value of the symbol will be printed.

The top line of data in each block is the real part of the normalized impedance, calculated for each of the five lift-off values, and the bottom line is the imaginary part.

The example below is presented as an additional aid to those who wish to use this program.

Sample Calculation of CLAD1

As stated previously, this program is designed to be used in conjunction with the PHASEN program; thus, the example below is also referenced in that program.

Suppose it is desired to calculate the real and imaginary parts of the normalized impedances of all three coils in a reflection-type coil arrangement above a stainless steel plate. The driver coil is assumed to be 1 in. long with inner and outer radii of 0.200 and 0.300 in., respectively. The pickup coils are assumed to be 0.200 in. long with inner and outer radii of 0.100 and 0.150 in., respectively, and are flush with the ends of the driver. The stainless steel plate will be taken to be 0.025 in. thick and the minimum lift-off to be 0.025 in. The lift-off increment will be 0.0125 in., and the frequency of the driving current 100 kHz.

First, we determine the mean coil radius to be 0.250 in., so that

Normalized inner radius of the driver coil = 0.200/0.250 = 0.800
Normalized outer radius of the driver coil = 0.300/0.250 = 1.200
Normalized inner radius of the pickup coil = 0.100/0.250 = 0.400
Normalized outer radius of the pickup coil = 0.150/0.250 = 0.600
Normalized length of the driver coil = 0.500/0.250 = 2.000
Normalized length of the pickup coil = 0.200/0.250 = 0.800
Normalized distance of the pickup coils from ends of the driver coil = 0
Normalized minimum lift-off = 0.025/0.250 = 0.100
Normalized increment of lift-off = 0.0125/0.250 = 0.050
Normalized thickness of plate = 0.025/0.250 = 0.100

Furthermore,

Angular frequency of driving current = $2\pi \times 100{,}000\ \text{sec}^{-1}$

Permeability of stainless steel conductor = $4\pi \times 10^{-7}$ h/m

Relative permeability of conductor = 1

Conductivity of stainless steel = 1.3333×10^{6} mhos/m

Thus,

$$\omega\mu_1\sigma_1\bar{r}^2 = 42.45$$
$$\omega\mu_2\sigma_2\bar{r}^2 = 0$$

This information is now typed into the program as follows:

```
20 LET R1 = 0.8
30 LET R2 = 1.2
40 LET R3 = 0.4
50 LET R4 = 0.6
60 LET L0 = 2.0
70 LET L1 = 0.8
80 LET L2 = 0
90 LET L3 = 0
100 LET L4 = 0.05
130 LET M1 = 42.45
140 LET U1 = 1
150 LET M2 = 0
710 LET X2 = X
720 LET Y2 = 0
160 LET U2 = 1
170 LET C = 0.1
```

The program is now run with the following results:

```
R1 = .8      R2 = 1.2          DRIVER LENGTH IS 2
R3 = .4      R4 = .6           PICKUP LENGTH IS .8
M1 = 42.45   U1 = 1            PICKUPS RECESSED 0
M2 = 0       U2 = 1            CLAD THICKNESS = .1

                NOR REAL PART --- NOR IMAG PART

                          DRIVER COIL

5.99304E-2    5.22041E-2    4.56566E-2    4.00789E-2    .035305
.88838        .899672       .909541       .918199       .925821
```

BOTTOM PICKUP

5.67095E-2	4.50409E-2	.036173	2.93464E-2	2.40301E-2
.938451	.948338	.956264	.962684	.967934

TOP PICKUP

1.4727E-3	1.33055E-3	1.20497E-3	1.0937E-3	9.94858E-4
.996125	.996411	.99667	.996905	.997119

Thus, for example, the real part of the normalized impedance of the bottom pickup coil, calculated for the maximum lift-off, is 2.40301E-2; the imaginary part is 0.967934.

CLAD1 Program

```
10 REM            CLAD1            VERSIØN 05/06/70
20 R1=.75
30 R2=1.25
40 R3=.35
50 R4=.7
60 L0=.4
70 L1=.1
80 L2=.1
90 L3=.1
100 L4=.05
110 L8=L3+L2
120 L6=L0+L3-L1-L2
130 M1=45.48
140 U1=1
150 M2=91.91
160 U2=1
170 C=.1
180 PRINT"R1=";R1,"R2=";R2,"DRIVER LENGTH IS";L0
190 PRINT"R3=";R3,"R4=";R4,"PICKUP LENGTH IS";L1
200 PRINT"M1=";M1,"U1=";U1,"PICKUPS RECESSED";L2
210 PRINT"M2=";M2,"U2=";U2,"CLAD THICKNESS=";C
220 LET S1=1E-2
230 LET S2=5
240 FØR I=0 TØ 4
250 J(I)=0
260 N(I)=0
270 K(I)=0
280 M(I)=0
290 P(I)=0
300 Q(I)=0
310 NEXT I
320 I9=0
330 I0=0
340 LET B1=0
```

```
350 LET B2 =S2
360 FØR X = B1 +S1/2 TØ B2 STEP S1
370 LET Z=R2*X
380 LET Q1=R2
390 GØSUB 1450
400 LET I2=F2
410 LET Z=R1*X
420 LET Q1=R1
430 GØSUB 1450
440 LET I1=F2
450 LET S3=S1*(I2-I1)↑2/X
460 Z=R4*X
470 Q1=R4
480 GØ SUB 1450
490 J2=F2
500 Z=R3*X
510 Q1=R3
520 GØ SUB 1450
530 J1=F2
540 S4=S1*(J2-J1)↑2/X
550 IF X*LO>15 THEN 590
560 G1=EXP(-2*X*LO)+1-2*EXP(-X*LO)
570 G2=EXP(-X*LO)-1
580 GØ TØ 610
590 G1=1
600 G2=-1
610 IF X*L1>15 THEN 650
620 G3=EXP(-2*X*L1)+1-2*EXP(-X*L1)
630 G4=EXP(-X*L1)-1
640 GØ TØ 670
650 G3=1
660 G4=-1
670 IF X*L3>7.5 THEN 1080
680 LET X1=.707107*(SQR(SQR(X*X*X*X+M1*M1)+X*X))/U1
690 LET Y1=.707107*(SQR(SQR(X*X*X*X+M1*M1)-X*X))/U1
700 IF X1*C*U1>15 THEN 850
710 X2=.707107*(SQR(SQR(X*X*X*X+M2*M2)+X*X))/U2
720 Y2=.707107*(SQR(SQR(X*X*X*X+M2*M2)-X*X))/U2
730 LET X3=EXP(2*X1*C*U1)
740 LET Y3=CØS(2*Y1*C*U1)
750 LET Y4=SIN(2*Y1*C*U1)
760 LET A6=(X-X1)*(X1+X2)+Y1*(Y1+Y2)
770 LET A7=(X-X1)*(Y1+Y2)-Y1*(X1+X2)
780 LETA5=(X+X1)*(X1-X2)-Y1*(Y1-Y2)+(A6*Y3-A7*Y4)*X3
790 LET B5=Y1*(X1-X2)+(X+X1)*(Y1-Y2)+(A7*Y3+A6*Y4)*X3
800 LET C6=(X+X1)*(X1+X2)-Y1*(Y1+Y2)
810 LET C7=Y1*(X1+X2)+(X+X1)*(Y1+Y2)
820 LET C5=(X-X1)*(X1-X2)+Y1*(Y1-Y2)+(C6*Y3-C7*Y4)*X3
830 LET D5=(X-X1)*(Y1-Y2)-Y1*(X1-X2)+(C7*Y3+C6*Y4)*X3
840 GØ TØ 890
850 LET A5 =X-X1
860 ET B5=-Y1
```

```
870 LET C5=X+X1
880 LET D5=Y1
890 LET K1=(A5*C5+B5*D5)/(C5*C5+D5*D5)
900 LET K2=(C5*B5-A5*D5)/(C5*C5+D5*D5)
910 FØR I=0 TØ 4
920 Z1=2*X*(L3+L4*I)
930 IF Z1>15 THEN 1080
940 Ø1=EXP(-Z1)
950 J(I)=J(I)+S3*G1*Ø1*K1/(2*X)
960 N(I)=N(I)+S3*G1*Ø1*K2/(2*X)
970 Z2=2*X*(L8+L4*I)
980 IF Z2>15 THEN 1070
990 Ø2=EXP(-Z2)
1000 K(I)=K(I)+S4*G3*Ø2*K1/(2*X)
1010 M(I)=M(I)+S4*G3*Ø2*K2/(2*X)
1020 Z3=2*X*(L6+L4*I)
1030 IF Z3>15 THEN 1070
1040 Ø3=EXP(-Z3)
1050 P(I)=P(I)+S4*G3*Ø3*K1/(2*X)
1060 Q(I)=Q(I)+S4*G3*Ø3*K2/(2*X)
1070 NEXT I
1080 I9=I9+S3*(G2/X+L0)
1090 I0=I0+S4*(G4/X+L1)
1100 NEXT X
1110 LETB1=B2
1120 LET B2=B2+S2
1130 IF X < 3 THEN 360
1140 LET S1=5E-2
1150 IF X<10 THEN 360
1160 LET S1=.1
1170LETS2=20
1180 IF X<35 THEN 360
1190 FØR I=0 TØ 4
1200 B(I)=I9+J(I)
1210 C(I)=I0+K(I)
1220 D(I)=I0+P(I)
1230 NEXT I
1240 PRINT"                    NØR REAL PART---NØR IMAG PART"
1250 FØR I=1 TØ 3
1260 FØR J=0 TØ 4
1270 PRINT:STØRE2:-N(J)/I9,B(J)/I9
1280 PRINT:STØRE2:-M(J)/I0,C(J)/I0
1290 PRINT:STØRE2:-Q(J)/I0,D(J)/I0
1300 NEXT J
1310 NEXT I
1320 PRINT
1330 PRINT"                                DRIVER CØIL"
1340 PRINT -N(0)/I9,-N(1)/I9,-N(2)/I9,-N(3)/I9,-N(4)/I9
1350 PRINT B(0)/I9,B(1)/I9,B(2)/I9,B(3)/I9,B(4)/I9
1360 PRINT
1370 PRINT"                               BØTTØM PICKUP"
1380 PRINT -M(0)/I0,-M(1)/I0,-M(2)/I0,-M(3)/I0,-M(4)/I0
```

```
1390 PRINT C(0)/IO,C(1)/IO,C(2)/IO,C(3)/IO,C(4)/IO
1400 PRINT
1410 PRINT"                                    TØP PICKUP"
1420 PRINT -Q(0)/IO,-Q(1)/IO,-Q(2)/IO,-Q(3)/IO,-Q(4)/IO
1430 PRINT D(0)/IO,D(1)/IO,D(2)/IO,D(3)/IO,D(4)/IO
1440 GØ TØ 1600
1450 IF Z>5 THEN1540
1460 LETL5=INT(2*Z)+3
1470 LETF1=.5*Q1*Q1*Z
1480 LET F2=F1/3
1490 FØRN=1TØL5
1500 LETF1=-F1*.250*Z*Z/(N*N+N)
1510 LETF2=F2+F1/(2*N+3)
1520 NEXTN
1530 GØTØ 1590
1540 LET Q1=(((-188.1357/Z+109.1142)/Z-23.79333)/Z+2.050931)/Z
1550 LET Q1=((Q1-.1730503)/Z+.7034845)/Z-.064109E-3
1560 LET Q2=(((-5.817517/Z+2.105874)/Z-.6896196)/Z+.4952024)/Z
1570 LET Q2=(Q2-.187344E-2)/Z+.7979095
1580 LET F2=(1-SQR(Z)*(Q2*CØS(Z-PI/4)-Q1*SIN(Z-PI/4)))/(X*X)
1590 RETURN
1600 END
```

Magnitude and Phase of Induced Voltage with Lift-Off Set

Discussion of DISC

This program is designed to simulate the lift-off adjustment in the phase-sensitive eddy-current instrument. The voltage from either a reflection coil or a through transmission-type coil may vary as shown in Fig. 6. The discriminator in the phase-sensitive eddy-current instrument may be set to trigger at a voltage level, V_1. With the discriminator set at this level, there is relatively little variation in phase shift with lift-off. This program first calculates the voltage level V_1 from the amplitude and phase of the voltage for maximum and minimum lift-off. It then calculates the phase shift for any other signal with the discriminator set to trigger at voltage V_2.

To use this program, one must execute the preceding program (RFLCT) for maximum and minimum lift-off and then for various clad thicknesses, conductivities, or lift-off values. In each instance, the data of interest will be the magnitude and phase values for X = 20 since they comprise the input data for the program at hand.

ORNL-DWG 68-10310

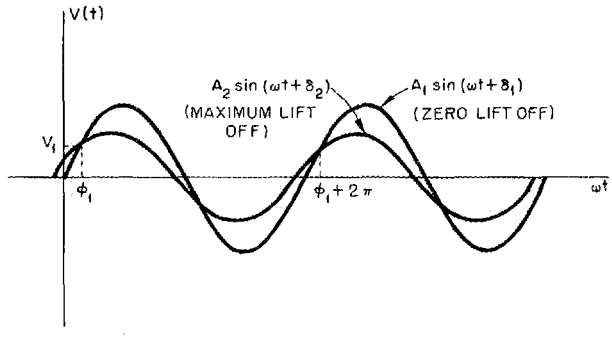

Fig. 6. Voltage Wave Form for Zero Lift-Off and Maximum Lift-Off.

Once this information has been obtained, one need only type the following line into the program. (Note: Parentheses are not typed.)

10 DATA (magnitude and phase values for minimum and maximum lift-off)

The program may now be run.

The print-out by the computer will have the following format:

```
ZERO PHASE IS ------          DISC. VOLT. IS ------
          WHAT ARE AI AND DI?
```

At this point, one types the magnitude and phase values for the thickness, conductivity, or lift-off of interest. The computer will then print

```
                    PHASE SHIFT IS ------
          WHAT ARE AI AND DI?
```

and the user again types magnitude and phase values of interest. The phase shift is printed, and new magnitude and phase values are requested. This sequence continues until the user exhausts all data obtained from the preceding program. The second quantity on the first line is the voltage at which the discriminator of the Phase-Sensitive Eddy-Current Instrument must be set in order that lift-off effects be minimized.

The example below is presented for additional aid to those who wish to use this program.

Sample Calculation of DISC

Let us suppose that we wish to know the variation with clad thickness, with lift-off set, of the difference in phase of the voltages induced in two pickup coil positions coaxially inside and flush with the ends of the driver coil. The driver coil is assumed to be 2 in. long with inner and outer radii of 0.200 and 0.300 in., respectively, while the pickup coils are assumed to be 0.200 in. long with inner and outer radii of 0.100 and 0.150 in., respectively. The conductors are assumed to be copper with a nominal thickness of 0.010 in. clad on an effectively infinite thickness of aluminum (at least four coil diameters or skin depths, whichever is smaller). Let us further suppose that we are interested in a thickness range of copper of ±10% about the nominal thickness. The frequency of the driving current is assumed to be 5 kHz, and the maximum and minimum lift-off values to be 0.050 and 0 in., respectively.

First we determine the mean driver coil radius to be 0.250 in., so that

Normalized inner radius of driver coil = 0.200/0.250 = 0.8
Normalized outer radius of driver coil = 0.300/0.250 = 1.2
Normalized inner radius of pickup coil = 0.100/0.250 = 0.4
Normalized outer radius of pickup coil = 0.150/0.250 = 0.6
Normalized minimum lift-off = 0/0.250 = 0
Normalized maximum lift-off = 0.050/0.250 = 0.2
Normalized length of driver coil = 2.000/0.250 = 8
Normalized length of pickup coil = 0.200/0.250 = 0.8
Normalized distance of pickup coil from ends of driver coil = 0
Normalized thicknesses of copper = 0.036, 0.040, 0.044

Furthermore,

Angular frequency of driving current = $2\pi \times 5000$ sec^{-1}
Permeability of <u>both</u> conductors = $4\pi \times 10^{-7}$ h/m
Relative permeability of both conductors = 1
Conductivity of copper = 5.77×10^{7} mhos/m
Conductivity of aluminum = 2.86×10^{7} mhos/m

Thus

$$\omega\mu_1\sigma_1\overline{r}^2 = 91.91$$
$$\omega\mu_2\sigma_2\overline{r}^2 = 45.48$$

This information is now typed into the preceding program which is then executed. The following information results:

LIFT-OFF	COPPER THICKNESS	MAGNITUDE	PHASE
0	0.04	0.3978011E-02	1.8335539
0.2	0.04	0.2343262E-02	1.8107041
0	0.036	0.39597E-02	1.8366082
0	0.044	0.3994483E-02	1.8304675

The magnitude and phase values for minimum and maximum lift-off are now typed into the program – that is, one types

```
10 DATA  0.3978011E-2,   1.8335539,   0.2343262E-2,   1.8107041
```

At this point the program is run, and the following results are obtained:

```
ZERO PHASE IS 1.2753124          DISC. VOLT. IS 0.1301623E-03
          WHAT ARE AI AND DI?     0.39597E-2,    1.8366082
                    PHASE SHIFT IS 3.0790429
          WHAT ARE AI AND DI?   0.3994483E-2,    1.8304675
                    PHASE SHIFT IS 3.0731886
```

From this we see that for zero lift-off and a copper thickness of 0.036 the phase shift, with lift-off set, is 3.0790429, while for the same lift-off and a copper thickness of 0.044 it is 3.0731886.

DISC Program

```
10 DATA 1.51288E-3,.656582,7.36538E-4,.535609
20 READ A1,D1,A2,D2
30 LET Ø1=ATN((A2*SIN(D2)-A1*SIN(D1))/(A1*CØS(D1)-A2*CØS(D2)))
40 LET V1=A1*SIN(Ø1+D1)
50 PRINT"ZERØ PHASE IS ";Ø1,"DISC. VØLT. IS ";V1
60 PRINT"            WHAT ARE AI AND DI";
70 INPUT A3,D3
80 PRINT
90 PRINT" ","PHASE SHIFT IS";Ø1-ATN(V1/SQR(A3*A3-V1*V1))+D3
100 PRINT
110 GØ TØ 60
120 END
```

Phase of Induced Voltage for a Range of Cladding Thickness Values with Lift-Off Automatically Set

Discussion of RFLC

This program is designed to calculate the variation with clad thickness, with lift-off set, of the phase shift of the voltage induced in two oppositely wound pickup coils of the same size by the current in a large driver coil above a two-layered conductor. The physical situation is shown in Fig. 5, p. 61. The pickup coils must be identical, equidistant from the respective ends of the driver coil, and be within its length. They must also be coaxial with the driver coil. The two conducting layers may have different permeabilities and electrical conductivities.

The program calculates the magnitude and phase of the induced voltage at 15 points on a 3×5 lattice (5 values of lift-off and 3 values of clad thickness). This allows one to examine the sensitivity to lift-off variations as well as to clad thickness variations.

To use this program, one must first divide all dimensions by the mean radius of the driver coil. The results will, of course, be dimensionless and will be referred to as being "normalized." The product of the angular frequency of the driving current, the permeability, the conductivity, and the square of the mean radius of the driver coil must be calculated for each conductor. Let this product be denoted by $\omega\mu_1\sigma_1\bar{r}^2$ for the upper layer and by $\omega\mu_2\sigma_2\bar{r}^2$ for the lower one.

Once these calculations have been made, one need only type the following lines into the program. (Note: Parentheses are not typed.)

20 LET R1 = (numerical value of normalized inner radius of the driver coil)

30 LET R2 = (numerical value of normalized outer radius of the driver coil)

40 LET R3 = (numerical value of normalized inner radius of the pickup coils)

50 LET R4 = (numerical value of normalized outer radius of the pickup coils)

60 LET L6 = (numerical value of normalized minimum lift-off)

70 LET L2 = (numerical value of normalized lift-off increment)

80 LET L3 = (numerical value of normalized length of driver coil)

90 LET L4 = (numerical value of normalized length of pickup coils)

100 LET L5 = (numerical value of normalized distance of pickup coils from the ends of the driver coil)

110 LET M1 = (numerical value of $\omega\mu_1\sigma_1\bar{r}^2$)

120 LET C9 = (numerical value of fractional change in clad thickness)

130 LET U1 = (numerical value of permeability of upper conductor)

140 LET M2 = (numerical value of $\omega\mu_2\sigma_2\bar{r}^2$)

Note: If the conductivity of the lower conductor is zero, one must type two additional lines into the program:

620 LET X2 = X

630 LET Y2 = 0

150 LET U2 = (numerical value of relative permeability of lower conductor)

The program may now be run.

The print-out by the computer will have the following format:

```
R1 = (R1)       R2 = (R2)            DRIVER LENGTH IS (L3)
R3 = (R3)       R4 = (R4)            PICKUP LENGTH IS (L4)
M1 = (M1)       U1 = (U1)            PICKUPS RECESSED (L5)
M2 = (M2)       U2 = (U2)
C IS (C) PLUS AND MINUS (100*C9) PERCENT
ZERO LIFT-OFF IS (L6)
VOLTAGE/PHASE/PHASE WITH DISCRIMINATOR SET
DISCRIMINATOR VOLTAGE IS (V1)
(L6)          (L6 + L2)    (L6 + 2*L2)   (L6 + 3*L2)    (L6 + 4*L2)
-----          -----        -----         -----          -----
-----          -----        -----         -----          -----
-----          -----        -----         -----          -----

-----          -----        -----         -----          -----
-----          -----        -----         -----          -----
-----          -----        -----         -----          -----

-----          -----        -----         -----          -----
-----          -----        -----         -----          -----
-----          -----        -----         -----          -----

PHASE SHIFT -----      LIFT-OFF -----
% OF RANGE  -----      % OF TOTAL -----
```

The various symbols enclosed in parentheses are used to indicate that the numerical value of the symbol will be printed.

There are five columns of data, one under each of the five values of lift-off. Each column is divided into three sections of three lines each. These sections correspond, from top to bottom, to the three values (−100*C9, nominal, and +100*C9, percent) of clad thickness. The three lines in each section are, from top to bottom, the magnitude of the induced voltage divided by the product of frequency, driver current, number of turns on the driver coil, number of turns on a pickup coil, and mean radius of the driver coil (in meters); the phase of the induced voltage; and the phase shift between the induced voltage and a constant value which is taken to be the discriminator set point of the phase-sensitive eddy-current instrument (see DISC program, p. 77). The last two lines give the PHASE SHIFT, which is the phase shift due to the specified variation in clad thickness; the LIFT-OFF, which is the phase shift due to the specified variation in lift-off; the % OF RANGE, which is the LIFT-OFF divided by the PHASE SHIFT, times 100; and the % OF TOTAL THICKNESS, which is the total variation in clad thickness (2*C9) times the % OF RANGE.

The example below is presented as an additional aid to those who wish to use this program.

Sample Calculation of RFLC

Let us suppose we wish to know the differences in the voltages induced in two pickup coils positioned inside the driver coil and flush with its ends. The driver coil is assumed to be 0.500 in. long with inner and outer radii of 0.200 and 0.300 in., respectively, while the pickups are taken to be 0.200 in. long with inner and outer radii of 0.100 and 0.150 in., respectively. The conductor is taken to be a plate of stainless steel 0.025 in. thick whose thickness may vary by ±10%. The frequency of the driving current is assumed to be 100 kHz and the minimum lift-off 0.025 in. The lift-off increment will be taken to be 0.0125 in.

First, we determine the mean coil radius to be 0.250 in., so that

Normalized inner radius of driver coil = 0.200/0.250 = 0.800

Normalized outer radius of driver coil = 0.300/0.250 = 1.200

Normalized inner radius of pickup coil = 0.100/0.250 = 0.400

Normalized outer radius of pickup coil = 0.150/0.250 = 0.600

Normalized length of driver coil = 0.500/0.250 = 2.000

Normalized length of pickup coil = 0.200/0.250 = 0.800

Normalized minimum lift-off = 0.025/0.250 = 0.100

Normalized increment of lift-off = 0.0125/0.250 = 0.050

Normalized distance of pickup coils from ends of driver coil = 0

Normalized thickness of stainless steel plate = 0.025/0.250 = 0.100

Furthermore,

Angular frequency of driving current = $2\pi \times 100{,}000\ \mathrm{sec}^{-1}$

Permeability of stainless steel conductor = $4\pi \times 10^{-7}$ h/m

Relative permeability of conductor = 1

Conductivity of stainless steel = 1.3333×10^{6} mhos/m

Thus,

$$\omega\mu_1\sigma_1\overline{r}^2 = 42.45$$

$$\omega\mu_2\sigma_2\overline{r}^2 = 0$$

This information is typed into the program using the following format:

```
20 LET R1 = 0.8
30 LET R2 = 1.2
40 LET R3 = 0.4
50 LET R4 = 0.6
60 LET L6 = 0.1
70 LET L2 = 0.05
80 LET L3 = 2.0
90 LET L4 = 0.8
100 LET L5 = 0
110 LET M1 = 42.45
120 LET C9 = 0.10
130 LET U1 = 1
140 LET M2 = 0
620 LET X2 = X
```

```
630 LET Y2 = 0
150 LET U2 = 1
160 LET C = 0.1
```

The program is now run with the following results:

```
R1 = .8        R2 = 1.2              DRIVER LENGTH IS 2
R3 = .4        R4 = .6               PICKUP LENGTH IS .8
M1 = 42.45     U1 = 1                PICKUPS RECESSED 0
M2 = 0         U2 = 1
C IS .1 PLUS AND MINUS 10. PERCENT
ZERO LIFT-OFF IS .1
VOLTAGE/PHASE/PHASE WITH DISCRIMINATOR SET
DISCRIMINATOR VOLTAGE IS -2.12874E-8

.1             .15            .2             .25            .3
3.41177E-7     2.94307E-7     2.54675E-7     2.21124E-7     1.92665E-7
2.23022        2.21858        2.20641        2.19397        2.18143
4.23914E-2     4.07057E-2     3.98332E-2     4.01277E-2     4.18844E-2

3.51116E-7     3.02629E-7     2.61659E-7     2.27002E-7     1.97625E-7
2.1896         2.17836        2.16659        2.15452        2.14234
1.45519E-11   -1.50022E-3    -2.2319E-3     -1.83224E-3    -2.80852E-9

3.58887E-7     3.09115E-7     2.67085E-7     2.31552E-7     2.01451E-7
2.15383        2.14301        2.13163        2.11994        2.10813
-3.70875E-2   -3.83351E-2    -3.88511E-2    -3.82646E-2    -3.62689E-2

PHASE SHIFT 7.94789E-2     LIFT-OFF 2.5582E-3
% OF RANGE  3.21872        % OF TOTAL .643744
```

from which we see that the phase shift due to a 20% change in clad thickness is 7.94789×10^{-2} radians, while that due to lift-off is 2.5582×10^{-3} radians, the latter phase shift being 3.21872% of the former and .643744% of the total thickness variation (20%).

RFLC Program

```
10 REM          RFLC          VERSIØN    01/05/70
20R1=.75
30R2=1.25
40R3=.35
50R4=.7
60L6=0
70L2=.05
80L3=.4
90L4=.1
100L5=.1
110 M1=45.48
120 LET C9=.05
130 LET U1=1
140 M2=91.91
```

```
150 LET U2=1
160 LET C=1
170 LET C1=C
180 PRINT "R1=";R1, "R2=";R2, "DRIVER LENGTH IS";L3
190 PRINT "R3=";R3, "R4=";R4, "PICKUP LENGTH IS";L4
200 PRINT"M1=";M1,"U1=";U1,"PICKUPS RECESSED";L5
210 PRINT"M2=";M2,"U2=";U2
220 PRINT"C IS";C;"PLUS AND MINUS";100*C9;"PERCENT"
230 PRINT"ZERØ LIFT-ØFF IS";L6
240PRINT"VØLTAGE/PHASE/PHASE WITH DISCRIMINATØR SET"
250 LET S1=1E-2
260 LET S2=5
270FØRI=1TØ3
280 FØR J=1 TØ 5
290R(I<J)=0
300I(I,J)=0
310 NEXT J
320NEXTI
330 LET B1=0
340 LET B2 =S2
350 FØR X = B1 +S1/2 TØ B2 STEP S1
360 LET Z=R2*X
370 LET Q1=R2
380 GØSUB 1480
390 LET I2=F2
400 LET Z=R1*X
410 LET Q1=R1
420 GØSUB 1480
430 LET I1=F2
440 LET Z=R4*X
450 LET Q1=R4
460 GØSUB 1480
470 LET J2=F2
480 LET Z=R3*X
490 LET Q1=R3
500 GØSUB 1480
510 LET J1=F2
520 LET S3=S1*(I2-I1)*(J2-J1)
530 IF X*L3>50 THEN 570
540 G=EXP(-X*L5)+EXP(-X*(L3-L5))-EXP(-X*(L3-L4-L5))-EXP(-X*(L4+L5))
550 G5=EXP(-X*L3)-1
560 GØ TØ 590
570 G=EXP(-X*L5)*(1-EXP(-X*L4))
580 G5=-1
590 X1=.70710681*SQR(SQR(X*X*X*X+M1*M1)+X*X)/U1
600 Y1=.70710681*SQR(SQR(X*X*X*X+M1*M1)-X*X)/U1
610 IF X1*C*U1>15 THEN 860
620 X2=.70710681*SQR(SQR(X*X*X*X+M2*M2)+X*X)/U2
630 Y2=.7710681*SQR(SQR(X*X*X*X+M2*M2)-X*X)/U2
640 A6==(X-1)*(X1+X2)+Y1*(Y1+Y2)
650 A7=(X-X1)*(Y1+Y2)-Y1*X1+PX22))
660 C7=Y1*(X1+X2)+(X+X1)*(Y1+Y2)
670 FØR I=1 TØ 3
680 C=C1*(1+(I-2)*C9)
690 X3=EXP(2*X1*C*U1)
700 Y3=CØS(2*Y1*C*U1)
710 Y4=SIN(2*Y1*C*U1)
720 A5=(X+X1)*(X1-X2)-Y1*(Y1-Y2)+(A6*Y3-A7*Y4)*X3
730000  AC66==(X+X1)*(X1+X2)-Y1*(Y1+Y2)
740 B5=Y1*(X1-X2)+(X+X1)*(Y1-Y2)+(A7*Y3+A6*Y4)*X3
```

```
750 C5=(X-X1)*(X1-X2)+Y1*(Y1-Y2)+(C6*Y3-C7*Y4)*X3
760 D5=(X-X1)*(Y1-Y2)-Y1*(X1-X2)+(C7*Y3+C6*Y4)*X3
770 K(I)=(A5*C5+D5*B5)/(C5*C5+D5*D5)
780 N(I)=(C5*B5-A5*D5)/(C5*C5+D5*D5)
790FØRJ=1TØ5
800L=(J-1)*L2+L6
810LETR(I,J)=R(I,J)+S3*K(I)*G*G5*EXP(-2*X*L)
820LETI(I,J)=I(I,J)+S3*N(I)*G*G5*EXP(-2*X*L)
830NEXTJ
840NEXTI
850 GØ TØ 990
860 A5=X-X1
870 B5=-Y1
880 C5=X+X1
890 D5=Y1
900 FØR I=1 TØ 3
910 K(I)=(A5*C5+D5*B5)/(C5*C5+D5*D5)
920 N(I)=(C5*B5-A5*D5)/(C5*C5+D5*D5)
930 FØR J=1 TØ 5
940 L=(J-1)*L2+L6
950 R(I,J)=R(I,J)+S3*K(I)*G*G5*EXP(-2*X*L)
960 I(I,J)=I(I,J)+S3*N(I)*G*G5*EXP(-2*X*L)
970 NEXT J
980 NEXT I
990NEXTX
1000 LET B1=B2
1010 LET B2=B2+S2
1020 IF X < 3 THEN 350
1030 LET S1=5E-2
1040 IF X<9 THEN 350
1050 LET S1=.1
1060 IF X<19 THEN 350
1070 PRINT
1080 PRINT
1090FØRI=1TØ3
1100 FØR J=1 TØ 5
1110LETM(I,J)=SQR(R(I,J)↑2+I(I,J)↑2)*2.4805E-5/((R2-R1)*(R4-R3)*L3*L4)
1120LETP(I,J)=ATN(-R(I,J)/I(I,J))
1130IFI(I,J)<ØTHEN1160
1140LETP(I,J)=P(I,J)+PI
1160 NEXT J
1170NEXTI
1180LETH1=M(2,1)
1190LETH2=M(2,5)
1200LETH5=P(2,1)
1210HETH6=P(2,5)
1220GØSUB1630
1230 PRINT L6,L6+L2,L6+2*L2,L6+3*L2,L6+4*L2
1240FØRI=1TØ3
1250FØRJ=1TØ5
1260Q1=M(I,J)
1270Q2=P(I,J)
1280GØSUB1680
1290Y(I,J)=P
1300NEXTJ
1310PRINT
1320PRINTM(I,1),M(I,2),M(I,3),M(I,4),M(I,5)
1330PRINTP(I,1),P(I,2),P(I,3),P(I,4),P(I,5)
1340PRINTY(I,1),Y(I,2),Y(I,3),Y(I,4),Y(I,5)
1350NEXTI
```

```
1360Q1=Y(1,1)
1370Q2=Q1
1380FØRJ=2TØ5
1390 IF Y(1,J)<Q1 THEN 1410
1400Q1=Y(1,J)
1410 IF Y(1,J)>Q2 THEN 1430
1420 Q2=Y(1,J)
1430 NEXTJ
1440Q3=Y(1,1)-Y(3,1)
1450PRINT"PHASE SHIFT";Q3;"LIFTØFF";Q1-Q2;"% ØF RANGE";100*(Q1-Q2)/Q3
1460 PRINT"% ØF TØTAL THICKNESS";(Q1-Q2)*200*C9/Q3
1470 GØ TØ 1700
1480IFZ>5THEN1570
1490 LET L9=INT(2*Z)+3
1500 LET F1=.5*Q1*Q1*Q1
1510 LET F2=F1/3
1520 FØR N=1TØL9
1530 LETF1=-F1*.250*Z*Z/(N*N+N)
1540 LETF2=F2+F1/(2*N+3)
1550 NEXTN
1560 GØTØ 1620
1570 LET Q1=(((-188.1357/Z+109.1142)/Z-23.79333)/Z+2.050931)/Z
1580 LET Q1=((Q1-.1730503)/Z+.7034845)/Z-.064109E-3
1590 LET Q2=(((-5.817517/Z+2.105874)/Z-.6896196)/Z+.4952024)/Z
1600 LET Q2=(Q2-.187344E-2)/Z+.7979095
1610 LETF2=(1-SQR(Z)*(Q2*CØS(Z-PI/4)-Q1*SIN(Z-PI/4)))/(X*X*X)
1620 RETURN
1630 LET Ø1=ATN((H2*SIN(H6)-H1*SIN(H5))/(H1*CØS(H5)-H2*CØS(H6)))
1640 IFH1*CØS(H5)-H2*CØS(H6)>0THEN1660
1650 LETØ1=Ø1-3.14159265
1660 LETV1=H1*SIN(Ø1+H5)
1670PRINT"DISCRIMINATØR VØLTAGE IS";V1
1680 LET P=Ø1-ATN(V1/SQR(Q1*Q1-V1*V1))+Q2
1690RETURN
1700 END
```

Change in Magnitude and Phase of Induced Voltage Due to a Defect in the Cladding Material

Discussion of RFDFT

This program is designed to calculate the defect sensitivity factor for a reflection-type coil above a two-layered conductor (see Fig. 5, p. 61). For this program, the defect must be in the upper layer. The pickup coils must be identical, equidistant from the respective ends of the driver coil, and entirely within its length. They must also be coaxial with the driver coil. The two conducting layers may have different electrical conductivities.

To use this program, one must first divide all dimensions by the mean radius of the driver coil. The results will, of course, be dimensionless and will be referred to as being "normalized." The product of

the angular frequency of the driving current, the permeability, the conductivity, and the square of the mean radius of the driver coil must be calculated for each conductor. Let this product be denoted by $\omega\mu_1\sigma_1\overline{r}^2$ for the upper layer and by $\omega\mu_2\sigma_2\overline{r}^2$ for the lower one.

Once these calculations have been made one need only type the following lines into the program. (Note: Parentheses are not typed.)

```
12 LET R1 = (numerical value of normalized inner radius of driver
            coil)
14 LET R2 = (numerical value of normalized outer radius of driver
            coil)
16 LET R3 = (numerical value of normalized inner radius of pickup
            coil)
18 LET R4 = (numerical value of normalized outer radius of pickup
            coil)
20 LET L = (numerical value of normalized lift-off)
22 LET L1 = (numerical value of normalized length of driver coil)
24 LET L2 = (numerical value of normalized length of pickup coil)
26 LET L3 = (numerical value of normalized distance of pickup coil
            from ends of driver coil)
28 LET M1 = (numerical value of ωμ1σ1r̄²)
30 LET M2 = (numerical value of ωμ2σ2r̄²)
```

Note: If the conductivity of the lower conductor is zero, one must type:

```
118 LET X2 = X
120 LET Y2 = 0
32 LET C = (numerical value of normalized thickness of upper
           conductor)
34 LET R = (numerical value of normalized r position coordinate
           of defect)
36 LET Z1 = (numerical value of normalized z position coordinate
            of defect)
```

The program may now be run.

For each lift-off value, the print-out by the computer will have the following format:

```
DEFECT PROGRAM FOR PHASE-SENSITIVE EDDY-CURRENT INSTRUMENT
DRIVER LENGTH IS (L1)     R1 = (R1)        R2 = (R2)
PICKUP LENGTH IS (L2)     R3 = (R3)        R4 = (R4)
CLAD THICKNESS IS (C)     M1 = (M1)        M2 = (M2)
DEFECT LOCATION IS        R = (R)          Z = (Z1)
PICKUP IS RECESSED (L3)   LIFT-OFF IS (L)
X            REAL #1      IMAG #1          REAL #2          IMAG #2
5            ------       ------           ------           ------
10           ------       ------           ------           ------
15           ------       ------           ------           ------
20           ------       ------           ------           ------
25           ------       ------           ------           ------
30           ------       ------           ------           ------
VOLTAGE/FINN'R(BAR) = ------                PHASE = ------
```

The various symbols enclosed in parentheses are used here to indicate that the numerical value of the symbol will be printed. The first column, headed "X," is the upper limit of the integration being performed by the computer, while the other four columns are the real and imaginary parts of the two integrals which appear in the expression for the defect voltage. These appear primarily to allow one to inspect the convergence of the integration. In addition to the phase of the defect sensitivity factor, the last line contains the magnitude of the defect sensitivity factor divided by the product of the frequency of the driving current, the numbers of turns on the driver and pickup coils, and the mean radius of the driver coil.

The example below is presented for additional aid to those who wish to use this program.

Sample Calculation of RFDFT

Suppose that we wish to know the defect sensitivity factor for the case of two pickup coils positioned inside and flush with the ends of the driver coil. The driver coil is assumed to be 2 in. long, with inner and outer radii of 0.200 and 0.300 in., respectively, while the pickup coils are assumed to be 0.200 in. long, with inner and outer radii 0.100 and 0.150 in., respectively. The conductor is assumed to be 0.010 in. of copper clad on an effectively infinite thickness of aluminum

(at least four coil diameters or skin depths, whichever is smaller). Let us further suppose that we are interested in the defect sensitivity factor for the case in which the defect is located 0.005 in. below the surface of the copper 0.250 in. from the coil axis. We shall assume the driving frequency to be 5 kHz and the lift-off to be zero.

First, we determine the mean driver coil radius to be 0.250 in., so that

Normalized inner radius of driver coil = 0.200/0.250 = 0.8
Normalized outer radius of driver coil = 0.300/0.250 = 1.2
Normalized inner radius of pickup coils = 0.100/0.250 = 0.4
Normalized outer radius of pickup coils = 0.150/0.250 = 0.6
Normalized lift-off = 0/0.250 = 0
Normalized length of driver = 2.000/0.250 = 8
Normalized length of pickup = 0.200/0.250 = 0.8
Normalized distance of pickups from ends of driver = 0
Normalized thickness of copper = 0.010/0.250 = 0.04
Normalized r position of defect = 0.250/0.250 = 1
Normalized z position of defect = 0.005/0.250 = 0.02

Furthermore,

Angular frequency of driving current = $2\pi \times 5000\ \mathrm{sec}^{-1}$
Permeability of <u>both</u> conductors = $4\pi \times 10^{-7}$ h/m
Conductivity of copper = 5.77×10^{7} mhos/m
Conductivity of aluminum = 2.86×10^{7} mhos/m

Thus

$$\omega\mu_1\sigma_1\bar{r}^2 = 91.91$$
$$\omega\mu_2\sigma_2\bar{r}^2 = 45.48$$

This information is now typed into the program as follows:

```
12 LET R1 = 0.8
14 LET R2 = 1.2
16 LET R3 = 0.4
18 LET R4 = 0.6
20 LET L  = 0
```

```
22 LET L1 = 8
24 LET L2 = 0.8
26 LET L3 = 0
28 LET M1 = 91.91
30 LET M2 = 45.48
32 LET C = 0.04
34 LET R = 1
36 LET Z1 = -0.02
```

The program is now run with the following results:

```
DEFECT PROGRAM FOR PHASE-SENSITIVE EDDY-CURRENT INSTRUMENT
DRIVER LENGTH IS 8          R1 = .8        R2 = 1.2
PICKUP LENGTH IS .8         R3 = .4        R4 = .6
CLAD THICKNESS IS .04       M1 = 91.91     M2 = 45.48
DEFECT LOCATION IS          R = 1          Z = -.02
PICKUP IS RECESSED 0        LIFT-OFF IS 0
X              REAL #1      IMAG #1        REAL #2        IMAG #2
5.             1.74519E-2   -1.84411E-2    -2.14218E-3    2.41172E-3
10.            2.12246E-2   -2.00995E-2    -8.40258E-4    1.82973E-3
15.            2.16198E-2   -2.01746E-2    -1.20443E-3    1.8995E-3
20.            .02157       -2.01695E-2    -1.17105E-3    1.89717E-3
25.            2.14739E-2   -.020162       -1.16697E-3    1.89662E-3
30.            2.14484E-2   -2.01604E-2    -1.17335E-3    1.89701E-3
VOLTAGE/FINN'R(BAR) = 1.39594E-7           PHASE = 1.37027
```

from which we see that the phase of the defect sensitivity factor is 1.37027, while its magnitude is the product of 1.39594×10^{-7}, the frequency of the driving current, the number of turns on the driver coil and pickup coils, and the mean radius of the driver coil.

RFDFT Program

```
10 REM            RFDFT          VERSIØN     10/6/70
12 LET R1=.8
14 LET R2=1.2
16 LET R3=.4
18 LET R4=.6
20 LET L=0
22 LET L1=8
24 LET L2=.8
26 LET L3=0
28 LET M1=91.91
30 LET M2=45.48
32 LET C=.04
34 LET R=1
36 LET Z1=-.02
```

```
38PRINT"                    DEFECT PRØGRAM FØR PHASE SENSITIVE EDDY"
40PRINT"                              CURRENT INSTRUMENT"
42PRINT
44PRINT
46PRINT"DRIVER LENGTH IS";L1,"R1=";R1,"R2=";R2
48PRINT"PICKUP LENGTH IS";L2,"R3=";R3,"R4=";R4
50PRINT"CLAD THICKNESS IS";C,"M1=";M1,"M2=";M2
52PRINT"DEFECT LØCATIØN IS","R=";R,"Z=";Z1
54PRINT "PICKUP IS RECESSED";L3,"LIFT ØFF IS";L
56PRINT"X","REAL #1","IMAG #1","REAL #2","IMAG #2"
58 LET S1=1E-2
60 LET S2=5
62 FØR I=1 TØ 2
64LETR(I)=0
66LETI(I)=0
68 NEXT I
70 LET B1=0
72 LET B2 =S2
74FØRX=B1+S1/2TØB2STEPS1
76 LET Z=R2*X
78 LET Q1=R2
80 GØSUB 218
82LETI2=F2
84 LET Z=R1*X
86 LET Q1=R1
88 GØ SUB 218
90 LET I1=F2
92 LET S3=(I2-I1)*S1*(EXP(-X*L)-EXP(-X*(L+L1)))
94 LET Z=R4*X
96 LETQ1=R4
98 GØ SUB 218
100 LET I4=F2
102 LET Z=R3*X
104 LET Q1=R3
106 GØ SUB 218
108 LET I3=F2
110 S4=(I4-I3)*S1*EXP(-X*L)*(1-EXP(-X*L2))*(EXP(-X*(L1-2*L3-L2))-1)
111 S4=S4*EXP(-X*L3)
112 LET X1 = .707107*SQR(SQR(X*X*X*X+M1*M1)+X*X)
114 LET Y1 = .707107*SQR(SQR(X*X*X*X+M1*M1)-X*X)
116IFX1*C>15THEN146
118 LET X2 = .707107*SQR(SQR(X*X*X*X+M2*M2)+X*X)
120 LET Y2=.707107*SQR(SQR(X*X*X*X+M2*M2)-X*X)
122 LET X3=EXP(2*X1*C)
124 LET Y3=CØS(2*Y1*C)
126 LET Y4=SIN(2*Y1*C)
128 LET X5=X1+X2
130 LET X6=X1-X2
132 LET Y5=Y1+Y2
134 LET Y6=Y1-Y2
136 LET C6=(X+X1)*(X1+X2)-Y1*(Y1+Y2)
138 LET C7=Y1*(X1+X2)+(X+X1)*(Y1+Y2)
140 LET C5=(X-X1)*(X1-X2)+Y1*(Y1-Y2)+(C6*Y3-C7*Y4)*X3
142LETD5=(X-X1)*(Y1-Y2)-Y1*(X1-X2)+(C7*Y3+C6*Y4)*X3
144 GØ TØ 150
146 LETC5=X+X1
148LETD5=Y1
150IFX1*C>15THEN164
152LETZ2=2*C+Z1
154LETA5=(X5*CØS(Y1*Z2)-Y5*SIN(Y1*Z2))*EXP(X1*Z2)
156 LETA5=A5+(X6*CØS(Y1*Z1)+Y6*SIN(Y1*Z1))*EXP(-X1*Z1)
158 LET B5=(Y5*CØS(Y1*Z2)+X5*SIN(Y1*Z2))*EXP(X1*Z2)
```

```
160 LETB5=B5+(Y6*COS(Y1*Z1)-X6*SIN(Y1*Z1))*EXP(-X1*Z1)
162GO TO 168
164LETA5=EXP(X1*Z1)*COS(Y1*Z1)
166LETB5=EXP(X1*Z1)*SIN(Y1*Z1)
168LETK1=(A5*C5+B5*D5)/(C5*C5+D5*D5)
170 LET K2=(C5*B5-A5*D5)/(C5*C5+D5*D5)
172LETZ=X*R
174GOSUB248
176LETR(1)=R(1)+S3*K1*J1
178 LET I(1)=I(1)+S3*K2*J1
180 LET R(2)=R(2)+S4*K1*J1
182 LET I(2)=I(2)+S4*K2*J1
184 NEXT X
186 PRINT X+S1/2,R(1),I(1),R(2),I(2)
188LETB1=B1+S2
190LETB2=B2+S2
192LETS1=5E-2
194 IF X<15 THEN 74
196 LET S1=.1
198 IF X<25 THEN 74
200 LET R(3)=R(1)*R(2)-I(1)*I(2)
202 LET I(3)=R(1)*I(2)+R(2)*I(1)
204 LET P=ATN(I(3)/R(3))
206 IF R(3)>0 THEN 210
208 LET P=P+PI
210 LET M=SQR(R(3)*R(3)+I(3)*I(3))
212 LET Q=3*2.4805E-5*M1/(2*PI*(R2-R1)*(R4-R3)*L1*L2)
214PRINT"VOLTAGE/FINN'R(BAR)=";Q*M,"PHASE=";P
216 GO TO 270
218 IF Z>5 THEN 236
220 LETL5=INT(2*Z)+3
222 LETF1=.5*Q1*Q1*Z
224 LET F2=F1/3
226 FORN=1TOL5
228 LETF1=-F1*.250*Z*Z/(N*N+N)
230 LETF2=F2+F1/(2*N+3)
232 NEXTN
234 GOTO 246
236 LET P1=(((-188.1357/Z+109.1142)/Z-23.79333)/Z+2.050931)/Z
238 LET P1=((P1-.1730503)/Z+.7034845)/Z-.064109E-3
240 LET P2=(((-5.817517/Z+2.105874)/Z-.6896196)/Z+.4952024)/Z
242 LET P2=(P2-.187344E-2)/Z+.7979095
244 LET F2=(1-SQR(Z)*(P2*COS(Z-PI/4)-P1*SIN(Z-PI/4)))/(X*X)
246 RETURN
248 IFZ>3THEN 258
250 LET Q1=(((2.1E-11*Z↑2-5.38E-9)*Z↑2+6.757E-7)*Z↑2-5.42443E-5)*Z↑2
252 LET Q1=((Q1+2.60415E-3)*Z↑2-6.25E-2)*Z↑2+.5
254 LET J1=Z*Q1
256 GOTO 268
258 LET Q3=(((-.14604057/Z+.27617679)/Z-.20210391)/Z+4.61835E-3)/Z
260 LET Q3=((Q3+.14937)/Z+4.68E-6)/Z+.79788456
262 LET Q4=(((-.21262014/Z+.19397232)/Z+6.022188E-2)/Z-1.7222733E-1)/Z
264 LET Q4=((Q4+5.085E-4)/Z+.37498836)/Z-2.35619449+Z
266 LET J1=Q3*COS(Q4)/SQR(Z)
268 RETURN
270 LET L=L+.1
272 PRINT
274 IF L<.25 THEN 46
276 END

READY
```

Change in Magnitude and Phase of Induced Voltage Due to a Lattice of Defects in the Cladding Material

Discussion of RFDFL2

This program is designed to calculate the defect sensitivity factor for a reflection-type coil above a two-layered conductor. For this program, the defect may be located at any one of a number of points on a lattice in the upper layer, which is labeled III in Fig. 5, p. 61. The pickup coils must be identical, equidistant from the respective ends of the driver coil, and entirely within its length. They must also be coaxial with the driver coil. The two conducting layers may have different electrical conductivities.

Before proceeding further, it is worth noting that in the execution of this program the data generated by the computer are stored in a data block which is used as input data for another program. Since there exist BASIC compilers which do not have this capability, this program may or may not be executable, depending upon the compiler used. If the latter situation arises, one may delete the character :1: wherever it appears in the program, thus causing the data to be printed at the console; otherwise, one may access the data by using the name :1:.

To use this program, one must first divide all dimensions by the mean radius of the driver coil. The results will, of course, be dimensionless and will be referred to as being "normalized." The product of the angular frequency of the driving current, the permeability, the conductivity, and the square of the mean driver coil radius must be calculated for each conductor. Let this product be denoted by $\omega\mu_1\sigma_1\bar{r}^2$ for the upper layer and by $\omega\mu_2\sigma_2\bar{r}^2$ for the lower one.

Once these calculations have been made, one must type the following lines into the program. (Note: Parentheses are not typed.)

12 LET R1 = (numerical value of normalized inner radius of driver coil)

14 LET R2 = (numerical value of normalized outer radius of driver coil)

16 LET R3 = (numerical value of normalized inner radius of pickup coils)

18 LET R4 = (numerical value of normalized outer radius of pickup coils)

20 LET L = (numerical value of normalized lift-off)

22 LET L1 = (numerical value of normalized length of driver coil)

24 LET L2 = (numerical value of normalized length of pickup coils)

26 LET L3 = (numerical value of normalized distance of pickup coils from ends of driver coil)

28 LET M1 = (numerical value of $\omega\mu_1\sigma_1\overline{r}^2$)

30 LET M2 = (numerical value of $\omega\mu_2\sigma_2\overline{r}^2$)

Note: If the conductivity of the lower conductor is zero, one must type two additional lines:

124 LET X2 = X

126 LET Y2 = 0

32 LET C = (numerical value of normalized thickness of upper conductor)

34 LET R9 = (numerical value of normalized maximum radial position of defect)

36 LET M9 = (numerical value of number of lattice spacings in r direction)

38 LET N9 = (numerical value of number of lattice spacings in z direction)

Note: Neither M9 nor N9 may exceed 15. The lattice spacing in the r direction is R9/M9, while it is C/N9 in the z direction.

After typing these lines, one need only create an empty data file using the name :1:. The program may then be run.

During the execution of this program, integral multiples of 5 which are less than or equal to 30 will be printed at the console. These appear as indications of how far the integration has proceeded. The data resulting from this program will have the following format:

```
(L1)      (R1)      (R2)
(L2)      (R3)      (R4)
(C)       (M1)      (M2)
(L3)      (L)
(M9)      (N9)
          (R(1))    (R(2))      **********      (R(M9))
(Z(1))    ------    ------      **********      ------
          ------    ------      **********      ------
(Z(2))    ------    ------      **********      ------
          ------    ------      **********      ------
   *        *         *            *               *
   *        *         *            *               *
   *        *         *            *               *
   *        *         *            *               *
(Z(N9))   ------    ------      **********      ------
          ------    ------      **********      ------
```

The various symbols enclosed in parentheses are used here to indicate that the numerical value of the symbol will be printed. The upper value at each lattice point is the magnitude of the defect sensitivity factor, while the lower one is the phase of the defect sensitivity factor for the case in which the defect is located at the given lattice point. It should be noted that the lattice points for which M9 > 4 will be printed below the last line – that is, the line containing Z(N9).

The example below is presented for additional aid to those who wish to use this program.

Sample Calculation of RFDFL2

Suppose that we wish to know the defect sensitivity factor for the case of two pickup coils positioned inside and flush with the ends of the driver coil. The driver coil is assumed to be 2 in. long with inner and outer radii of 0.200 and 0.300 in., respectively, while the pickup coils are assumed to be 0.200 in. in length with inner and outer radii of 0.100 and 0.150 in., respectively. The conductors are assumed to be 0.010 in. of copper clad on an effectively infinite thickness of aluminum (at least four coil diameters or skin depths, whichever is smaller). Let us further suppose that we are interested in the defect sensitivity factor for the cases in which the defect is located at any one of the points which lie within 0.500 in. of the coil axis on a 4 × 2 lattice in the copper conductor. We shall assume the driving frequency to be 5 kHz and the lift-off to be zero.

First, we determine the mean radius of the driver coil to be 0.250 in., so that

Normalized inner radius of driver coil = 0.200/0.250 = 0.8
Normalized outer radius of driver coil = 0.300/0.250 = 1.2
Normalized inner radius of pickups = 0.100/0.250 = 0.4
Normalized outer radius of pickups = 0.150/0.250 = 0.6
Normalized lift-off = 0/0.250 = 0
Normalized length of driver coil = 2.000/0.250 = 8
Normalized length of pickups = 0.200/0.250 = 0.8
Normalized distance of pickups from ends of driver = 0/0.250 = 0
Normalized thickness of copper = 0.010/0.250 = 0.04
Maximum radial position of defect = 0.500/0.250 = 2
Number of r lattice spacings = 4
Number of z lattice spacings = 2

Furthermore,

Angular frequency of driving current = $2\pi \times 5000$ sec^{-1}
Permeability of <u>both</u> conductors = $4\pi \times 10^{-7}$ h/m
Conductivity of copper = 5.77×10^{7} mhos/m
Conductivity of aluminum = 2.86×10^{7} mhos/m

Thus,

$\omega\mu_1\sigma_1\overline{r}^2 = 91.91$
$\omega\mu_2\sigma_2\overline{r}^2 = 45.48$

This information is now typed into the program using the following format:

```
12 LET R1 = 0.8
14 LET R2 = 1.2
16 LET R3 = 0.4
18 LET R4 = 0.6
20 LET L = 0
22 LET L1 = 8
24 LET L2 = 0.8
26 LET L3 = 0
28 LET M1 = 91.91
```

```
30 LET M2 = 45.48
32 LET C = 0.04
34 LET R9 = 2
36 LET M9 = 4
38 LET N9 = 2
```

An empty data file is now created, and the program is run with the following results:

8	.8	1.2		
.8	.4	.6		
.04	91.91	45.48		
0	0			
4	2			
	.25	.75	1.25	1.75
-.01	7.90209E-8	2.80396E-7	5.17974E-8	6.15896E-9
	1.52977	-4.6947	1.2978	1.10321
-.03	6.62192E-8	2.3361E-7	4.31258E-8	5.11103E-9
	1.32039	1.38167	1.07198	.873305

from which we see that for the case in which the defect is located at $R = 1.25$, $Z = -0.03$, the defect sensitivity factor is 0.431258×10^{-7} $\exp(+j\ 1.07198)$.

RFDFL2 Program

```
10 REM              RFDFL2            VERSIØN     10/6/70
12 LET R1=.8
14 LET R2=1.2
16 LET R3=.4
18 LET R4=.6
20 LET L=0
22 LET L1=8
24 LET L2=.8
26 LET L3=0
28 LET M1=91.91
30 LET M2=45.48
32 LET C=.04
34 LET R9=2
36 LET M9=4
38 LET N9=2
40 DIM M(18,18),I(18,18),S(18,18),J(18,18),N(18,18),P(18,18),R(18),Z(18)
44PRINT:1:L1,R1,R2
46PRINT:1:L2,R3,R4
48 PRINT:1:C,M1,M2
50PRINT:1:L3,L
52 PRINT:1:M9,N9
54PRINT:1:
56 LET S1=1E-2
58 LET S2=5
```

```
60 FØR I=1 TØ N9
62 FØR J=1 TØ M9
64 LET M(I,J)=0
66LETI(I,J)=0
68 LET S(I,J)=0
70 LET J(I,J)=0
72 NEXT J
74 NEXT I
76 LET B1=0
78 LET B2 =S2
80FØRX=B1+S1/2TØB2STEPS1
82 LET Z=R2*X
84 LET Q1=R2
86 GØSUB 326
88LETI2=F2
90 LET Z=R1*X
92 LET Q1=R1
94 GØ SUB 326
96 LET I1=F2
98 LET S3=(I2-I1)*S1*(EXP(-X*L)-EXP(-X*(L+L1)))
100 LET Z=R4*X
102 LETQ1=R4
104 GØ SUB 326
106 LET I4=F2
108 LET Z=R3*X
110 LET Q1=R3
112 GØ SUB 326
114 LET I3=F2
116 S4=(I4-I3)*S1*EXP(-X*L)*(1-EXP(-X*L2))*(EXP(-X*(L1-2*L3-L2))-1)
117 S4=S4*EXP(-X*L3)
118 LET X1 = .707107*SQR(SQR(X*X*X*X+M1*M1)+X*X)
120 LET Y1 = .707107*SQR(SQR(X*X*X*X+M1*M1)-X*X)
122IFX1*C>15THEN152
124 LET X2 = .707107*SQR(SQR(X*X*X*X+M2*M2)+X*X)
126 LET Y2=.707107*SQR(SQR(X*X*X*X+M2*M2)-X*X)
128 LET X3=EXP(2*X1*C)
130 LET Y3=CØS(2*Y1*C)
132 LET Y4=SIN(2*Y1*C)
134 LET X5=X1+X2
136 LET X6=X1-X2
138 LET Y5=Y1+Y2
140 LET Y6=Y1-Y2
142 LET C6=(X+X1)*(X1+X2)-Y1*(Y1+Y2)
144 LET C7=Y1*(X1+X2)+(X+X1)*(Y1+Y2)
146 LET C5=(X-X1)*(X1-X2)+Y1*(Y1-Y2)+(C6*Y3-C7*Y4)*X3
148LETD5=(X-X1)*(Y1-Y2)-Y1*(X1-X2)+(C7*Y3+C6*Y4)*X3
150 GØ TØ 156
152 LETC5=X+X1
154LETD5=Y1
156 FØR I=1 TØ N9
158 LET Z(I)=(.5-I)*C/N9
160 LET Z1=Z(I)
162IFX1*C>15THEN176
164LETZ2=2*C+Z1
166LETA5=(X5*CØS(Y1*Z2)-Y5*SIN(Y1*Z2))*EXP(X1*Z2)
168LETA5=A5+(X6*CØS(-Y1*Z1)-Y6*SIN(-Y1*Z1))*EXP(-X1*Z1)
170 LET B5=(Y5*CØS(Y1*Z2)+X5*SIN(Y1*Z2))*EXP(X1*Z2)
172 LETB5=B5+(Y6*CØS(Y1*Z1)-X6*SIN(Y1*Z1))*EXP(-X1*Z1)
174GØ TØ 180
176LETA5=EXP(X1*Z1)*CØS(Y1*Z1)
178LETB5=EXP(X1*Z1)*SIN(Y1*Z1)
```

```
180LETK1=(A5*C5+B5*D5)/(C5*C5+D5*D5)
182 LET K2=(C5*B5-A5*D5)/(C5*C5+D5*D5)
184 FØR J=1 TØ M9
186 LET R(J)=(J-.5)*R9/M9
188LETZ=X*R(J)
190GØSUB356
192LETM(I,J)=M(I,J)+S3*K1*J1
194 LET I(I,J)=I(I,J)+S3*K2*J1
196 LET S(I,J)=S(I,J)+S4*K1*J1
198 LET J(I,J)=J(I,J)+S4*K2*J1
200 NEXT J
202 NEXT I
204 NEXT X
206 PRINT X+S1/2,
208LETB1=B1+S2
210LETB2=B2+S2
212LETS1=5E-2
214 IF X<15 THEN 80
216 LET S1=.1
218 IF X<25 THEN 80
220 LET Q=3*2.4805E-5*M1/(2*PI*(R2-R1)*(R4-R3)*L1*L2)
222 FØR I=1 TØ N9
224 FØR J=1 TØ M9
226 LET N(I,J)=M(I,J)*S(I,J)-I(I,J)*J(I,J)
228 LET I(I,J)=M(I,J)*J(I,J)+S(I,J)*I(I,J)
230 LET P(I,J)=ATN(I(I,J)/N(I,J))
232 IF N(I,J)>0 THEN 236
234 LET P(I,J)=P(I,J)-PI
236 LET M(I,J)=SQR(N(I,J)*N(I,J)+I(I,J)*I(I,J))
238 NEXT J
240 NEXT I
242 PRINT:1:" ",
244 FØR J=1 TØ 4
246 PRINT:1:R(J),
248 NEXT J
250 FØR I=1 TØ N9
252 PRINT:1:Z(I),
254 FØR J=1 TØ 4
256 PRINT:1:Q*M(I,J),
258 NEXT J
260 PRINT:1:" ",
262 FØR J=1 TØ 4
264 PRINT:1:P(I,J),
266 NEXT J
268 PRINT:1:
270 NEXT I
272 IF M9<4.5 THEN 378
274 FØR J=5 TØ 9
276 PRINT:1:R(J),
278 NEXT J
280 FØR I=1 TØ N9
282 FØR J=5 TØ 9
284 PRINT:1:Q*M(I,J),
286 NEXT J
288 FØR J=5 TØ 9
290 PRINT:1:P(I,J),
292 NEXT J
294 PRINT:1:
296 NEXT I
298 IF M9<9.5 THEN 378
300 FØR J=10 TØ 14
```

```
302 PRINT:1:R(J),
304 NEXT J
306 FØR I=1 TØ N9
308 FØR J=10 TØ 14
310 PRINT:1:Q*M(I,J),
312 NEXT J
314 FØR J=10 TØ 14
316 PRINT:1:P(I,J),
318 NEXT J
320 PRINT:1:
322 NEXT I
324 IF M9<14.5 THEN 378
326 IF Z>5 THEN 344
328 LETL5=INT(2*Z)+3
330 LETF1=.5*Q1*Q1*Z
332 LET F2=F1/3
334 FØRN=1TØL5
336 LETF1=-F1*.250*Z*Z/(N*N+N)
338 LETF2=F2+F1/(2*N+3)
340 NEXTN
342 GØTØ 354
344 LET P1=(((-188.1357/Z+109.1142)/Z-23.79333)/Z+2.050931)/Z
346 LET P1=((P1-.1730503)/Z+.7034845)/Z-.064109E-3
348 LET P2=(((-5.817517/Z+2.105874)/Z-.6896196)/Z+.4952024)/Z
350 LET P2=(P2-.187344E-2)/Z+.7979095
352 LET F2=(1-SQR(Z)*(P2*CØS(Z-PI/4)-P1*SIN(Z-PI/4)))/(X*X)
354 RETURN
356 IFZ>3THEN 366
358 LET Q1=(((2.1E-11*Z↑2-5.38E-9)*Z↑2+6.757E-7)*Z↑2-5.42443E-5)*Z↑2
360 LET Q1=((Q1+2.60415E-3)*Z↑2-6.25E-2)*Z↑2+.5
362 LET J1=Z*Q1
364 GØTØ 376
366 LET Q3=(((-.14604057/Z+.27617679)/Z-.20210391)/Z+4.61835E-3)/Z
368 LET Q3=((Q3+.14937)/Z+4.68E-6)/Z+.79788456
370 LET Q4=(((-.21262014/Z+.19397232)/Z+6.022188E-2)/Z-1.7222733E-1)/Z
372 LET Q4=((Q4+5.085E-4)/Z+.37498836)/Z-2.35619449+Z
374 LET J1=Q3*CØS(Q4)/SQR(Z)
376 RETURN
378 LET L=L+.1
380PRINT:1:
382 IF L<.25 THEN 44
384 END

READY
```

Change in Phase of Induced Voltage Due to a Lattice of Defects in the Cladding Material with Lift-Off Set

Discussion of BASREAD

This program is designed to calculate, with lift-off set, the variation with defect parameters of the phase difference of the voltages induced in two identical, oppositely wound pickup coils by the current in a large driver coil above a two-layered conductor (see Fig. 5, p. 61). For this program, the defect may be located at any one of a number of

points on a lattice in the upper layer; it may also have any size, shape, and orientation. The pickup coils must be identical, equidistant from the respective ends of the driver coil, and be within its length. They must also be coaxial with the driver coil. The two conducting layers may have different electrical conductivities.

To use this program, one must first execute RFLC and then RFDFL2. The output data from the latter program comprises the input data for this program. It is worth noting that the data generated by the computer in the execution of RFDFL2 are stored in a data block, which is then read as input for this program. Since there exist BASIC compilers which do not have this capability, this program may or may not be executable, depending upon the compiler used.

Once the execution of RFLC and RFDFL2 is complete, one need only type the following lines into the program. (Note: Parentheses are not typed.)

12 LET M = (number of different size defects)

14 LET N = (number of shape and orientation factors)

28 LET V1 = (numerical value of discriminator voltage setting)

Note: This value is given in the print-out of RFLC.

30 LET O1 = (numerical value of zero phase)

Note: This value may also be obtained from RFLC by inserting:

1225 PRINT "ZERO PHASE IS"; O1

290 DATA = (numerical value of normalized defect volumes)

292 DATA = ("N" shape and orientation factors[8])

294 DATA = (magnitude and phase of voltage for each lift-off in the absence of defect)

The data required in line 294 are given in the middle block of the print-out of RFLC.

The program may now be run.

---

[8]C. V. Dodd, W. E. Deeds, J. W. Luquire, and W. G. Spoeri, Some Eddy-Current Problems and Their Integral Solutions, ORNL-4384 (1969).

The print-out by the computer will have the following format:

```
DRIVER LENGTH IS (L1)       R1 = (R1)          R2 = (R2)
PICKUP LENGTH IS (L2)       R3 = (R3)          R4 = (R4)
CLAD THICKNESS IS (C)       M1 = (M1)          M2 = (M2)
PICKUP IS RECESSED (L3)     LIFT-OFF IS (L)
DISC VOLTAGE IS (V1)        ZERO PHASE IS (O1)
DEFECT VOLUME IS (V(D))     S AND O FACTOR IS (S(O))
Z    , R        (R(1))      (R(2))     **********     (R(M9))
(Z(1))          ------      ------     **********     ------
                ------      ------     **********     ------
                ------      ------     **********     ------

(Z(2))          ------      ------     **********     ------
                ------      ------     **********     ------
                ------      ------     **********     ------

   *              *           *           *              *
   *              *           *           *              *
   *              *           *           *              *
   *              *           *           *              *

(Z(N9))         ------      ------     **********     ------
                ------      ------     **********     ------
```

The various symbols enclosed in parentheses are used here to indicate that the numerical value of the symbol will be printed. All symbols not defined above are defined in the explanatory material for RFDFL2. The first value at each lattice point is the magnitude of the defect sensitivity factor, while the second one is the phase of the defect sensitivity factor for the case in which the defect is located at the given lattice point. The third value at each lattice point is the phase shift, with lift-off set, in the presence of the defect. It should be noted that the lattice points for which $M9 > 4$ will be printed below the last line [i.e., the line containing Z(N9)]. The entire format is repeated for each lift-off, defect volume, and shape and orientation factor.

The example below is presented for additional aid to those who wish to use this program.

Sample Calculation of BASREAD

Suppose that we are interested in the case for which the input data is just that obtained from the sample calculation of RFDFL2. Furthermore, let us assume a spherical defect with a radius of 0.0125 in. in the upper layer.

First, the appropriate values are placed in RFLC and that program is executed, which yields the following information:

LIFT-OFF	MAGNITUDE	PHASE
0	0.1927237E-6	1.8335539
0.1	0.1469769E-6	1.824176
0.2	0.1135246E-6	1.8107041

V1 = −0.06306E-7 O1 = −1.86628

Furthermore,

Normalized defect volume = 5.235988E-4

Shape and orientation factor = 1

This information is now typed into the program using the following format:

```
12 LET M = 1
14 LET N = 1
28 LET V1 = -0.06306E-7
30 LET O1 = -1.86628
290 DATA 5.235988E-4
292 DATA 1
294 DATA.1927237E-6, 1.8335539, .1469769E-6, 1.824176, .1135246E-6
     1.8107041
```

Execution of the program yields the results that follow:

```
DRIVER LENGTH IS 8
PICKUP LENGTH IS 0.8
CLAD THICKNESS IS 0.4E-01
PICKUP IS RECESSED 0
DISC. VOLTAGE IS -0.0630599E-07  ZERO PHASE IS -1.86628
DEFECT VOLUME IS 0.5235987E-03   S AND O FACTOR IS 1
Z   ,   R  0.25            0.75            1.25            1.75
-0.1E-01   0.077631E-06    0.2754239E-06   0.5103326E-07   0.6173647E-08
          -1.6201885      -1.5614521      -1.8482656      -2.0370686
           0.715163E-03    0.2116282E-03   0.0753722E-03   0.1174203E-04

-0.3E-01   0.6204239E-07   0.2191606E-06   0.4031928E-07   0.486054E-08
          -1.8616698      -1.7992387      -2.103904       -2.2950456
           0.0934912E-03   0.2983547E-03   0.080938E-03    0.1141581E-04
```

from which we see that a spherical defect with a radius of 0.0125 in. located at r = 1.25, z = −0.03 yields a phase difference, with lift-off set, equal to 0.080938E-03. The results for other values of lift-off have been omitted for the sake of brevity.

BASREAD Program

```
10 DIM M(18,18),P(18,18),R(18),Z(18),V(18),S(18)
12 LET M=5
14 LET N=1
16 FØR D=1 TØ M
18 READ V(D)
20 NEXT D
22 FØR Ø=1 TØ N
24 READ S(Ø)
26 NEXT Ø
28 LET V1=-.40926E-8
30 LET Ø1=-3.394969
32PRINT"                    DEFECT PRØGRAM FØR PHASE SENSITIVE EDDY"
34PRINT"                              CURRENT INSTRUMENT"
36PRINT"                                  (LATTICE)"
38PRINT
40PRINT
44 READ V,P
46 INPUT :1: L1,R1,R2
48 INPUT :1: L2,R3,R4
50 INPUT :1: C,M1,M2
52 INPUT :1: L3,L
54 INPUT :1: M9,N9
56 FØR J=1 TØ 4
58 INPUT :1: R(J)
60 NEXT J
62 FØR I=1 TØ N9
64 INPUT :1: Z(I)
66 FØR J=1 TØ 4
68 INPUT :1: M(I,J)
70 NEXT J
72 FØR J=1 TØ 4
74 INPUT :1: P(I,J)
76 NEXT J
78 NEXT I
80 IF M9<4.5 THEN 130
82 FØR J=5 TØ 9
84 INPUT :1: R(J)
86 NEXT J
88 FØR I=1 TØ N9
90 FØR J=5 TØ 9
92 INPUT :1: M(I,J)
94 NEXT J
96 FØR J=5 TØ 9
98 INPUT :1: P(I,J)
100 NEXT J
102 NEXT I
104 IF M9<9.5 THEN 130
106 FØR J=10 TØ 14
108 INPUT :1: R(J)
110 NEXT J
112 FØR I=1 TØ N9
114 FØR J=10 TØ 14
116 INPUT :1: M(I,J)
118 NEXT J
```

```
120 FØR J=10 TØ 14
122 INPUT :1: P(I,J)
124 NEXT J
126 NEXT I
128 IF M9<14.5 THEN 130
130 FØR Ø=1 TØ N
132 FØR D=1 TØ M
134 PRINT"DRIVER LENGTH IS";L1,"R1=";R1,"R2=";R2
136 PRINT"PICKUP LENGTH IS";L2,"R3=";R3,"R4=";R4
138 PRINT"CLAD THICKNESS IS";C,"M1=";M1,"M2=";M2
140 PRINT "PICKUP IS RECESSED";L3,"LIFT ØFF IS";L
142 PRINT"DISC. VØLTAGE IS "V1,"ZERØ PHASE IS ";Ø1
144 PRINT"DEFECT VØLUME IS";V(D),"S & Ø FACTØR IS";S(Ø)
146 PRINT
148 PRINT "  Z  ,  R",
150 FØR J=1 TØ 4
152 PRINT R(J),
154 NEXT J
156 FØR I=1 TØ N9
158 PRINT Z(I),
160 FØR J=1 TØ 4
162 PRINT M(I,J),
164 NEXT J
166 PRINT " ",
168 FØR J=1 TØ 4
170 PRINT P(I,J),
172 NEXT J
174 PRINT" ",
176 FØR J=1 TØ 4
178 LET W1=V(D)*S(Ø)*M(I,J)*CØS(P(I,J))+V*CØS(P)
180 LET W2=V(D)*S(Ø)*M(I,J)*SIN(P(I,J))+V*SIN(P)
182 LET W3=ATN(W2/W1)
184 IF W1>0 THEN188
186 LET W3=W3+PI
188 PRINT Ø1-ATN(V1/SQR(W1↑2+W2↑2-V1↑2))+W3,
190 NEXT J
192 PRINT
194 NEXT I
196 IF M9<4.5 THEN 282
198 FØR J=5 TØ 9
200 PRINT R(J),
202 NEXT J
204 FØR I=1 TØ N9
206 FØR J=5 TØ 9
208 PRINT M(I,J),
210 NEXT J
212 FØR J=5 TØ 9
214 PRINT P(I,J),
216 NEXT J
218 FØR J=5 TØ 9
220 LET W1=V(D)*S(Ø)*M(I,J)*CØS(P(I,J))+V*CØS(P)
222 LET W2=V(D)*S(Ø)*M(I,J)*SIN(P(I,J))+V*SIN(P)
224 LET W3=ATN(W2/W1)
226 IF W1>0 THEN 230
228 LET W3=W3+PI
230 PRINT Ø1-ATN(V1/SQR(W1↑2+W2↑2-V1↑2))+W3,
```

```
232 NEXT J
234 PRINT
236 NEXT I
238 IF M9<9.5 THEN 282
240 FØR J=10 TØ 14
242 PRINT R(J),
244 NEXT J
246 FØR I=1 TØ N9
248 FØR J=10 TØ 14
250 PRINT M(I,J),
252 NEXT J
254 FØR J=10 TØ 14
256 PRINT P(I,J),
258 NEXT J
260 FØR J=10 TØ 14
262 LET W1=V(D)*S(Ø)*M(I,J)*CØS(P(I,J))+V*CØS(P)
264 LET W2=V(D)*S(Ø)*M(I,J)*SIN(P(I,J))+V*SIN(P)
266 LET W3=ATN(W2/W1)
268 IF W1>0 THEN 272
270 LET W3=W3+PI
272 PRINT Ø1-ATN(V1/SQR(W1↑2+W2↑2-V1↑2))+W3,
274 NEXT J
276 PRINT
278 NEXT I
280 IF M9<14.5 THEN 282
282 NEXT D
284 NEXT Ø
286 PRINT
288 IF L<.25 THEN 44
290 DATA .143675E-2,.214466E-2,.305362E-2,.418879E-2,.557527E-2
292 DATA 1
294DATA.136045E-6,3.364882,.103404E-6,3.35574,.079711E-6,3.343604
296 END
```

Change in Magnitude and Phase of Induced Voltage
Due to a Defect in the Base Material

Discussion of RFDFTB

This program is designed to calculate the defect sensitivity factor for a reflection-type coil above a two-layered conductor (see Fig. 5, p. 61). For this program the defect must be in the lower layer. The pickup coils must be identical, equidistant from the respective ends of the driver coil, and be within its length. They must also be coaxial with the driver coil. In addition, the two conductor layers may have different electrical conductivities.

To use this program, one must first divide all dimensions by the mean radius of the driver coil. The results will, of course, be

dimensionless and will be referred to as being "normalized." The product of the angular frequency of the driving current, the permeability, and the square of the mean driver coil radius must be calculated for each conductor. Let this product be denoted by $\omega\mu_1\sigma_1\bar{r}^2$ for the upper layer and by $\omega\mu_2\sigma_2\bar{r}^2$ for the lower one.

Once these calculations have been made, one need only type the following lines into the program. (Note: Parentheses are not typed.)

12 LET R1 = (numerical value of normalized inner radius of driver coil)

14 LET R2 = (numerical value of normalized outer radius of driver coil)

16 LET R3 = (numerical value of normalized inner radius of pickup coil)

18 LET R4 = (numerical value of normalized outer radius of pickup coil)

20 LET L = (numerical value of normalized lift-off)

22 LET L1 = (normalized length of driver coil)

24 LET L2 = (normalized length of pickup coil)

26 LET L3 = (normalized distance of pickup coil from ends of driver coil)

28 LET M1 = $(\omega\mu_1\sigma_1\bar{r}^2)$

30 LET M2 = $(\omega\mu_2\sigma_2\bar{r}^2)$

Note: If the conductivity of the upper conductor is zero, one must type two additional lines:

112 LET X1 = X

114 LET Y1 = 0

32 LET C = (numerical value of normalized thickness of upper conductor)

34 LET R = (numerical value of normalized r position coordinate of defect)

36 LET Z1 = (numerical value of normalized z position coordinate of defect)

The program may now be run.

For each lift-off value, the print-out by the computer will have the following format:

```
DEFECT PROGRAM FOR PHASE-SENSITIVE EDDY-CURRENT INSTRUMENT
DRIVER LENGTH IS (L1)      R1 = (R1)      R2 = (R2)
PICKUP LENGTH IS (L2)      R3 = (R3)      R4 = (R4)
CLAD THICKNESS IS (C)      M1 = (M1)      M2 = (M2)
DEFECT LOCATION IS         R = (R)        Z = (Z1)
PICKUP IS RECESSED (L3)    LIFT-OFF IS (L)
X          REAL #1         IMAG #1        REAL #2        IMAG #2
5          ------          ------         ------         ------
10         ------          ------         ------         ------
15         ------          ------         ------         ------
20         ------          ------         ------         ------
25         ------          ------         ------         ------
30         ------          ------         ------         ------
VOLTAGE/FINN'R(BAR) = ------               PHASE = ------
```

The various symbols enclosed in parentheses are used here to indicate that the numerical value of the symbol will be printed. The first column, headed "X," is the upper limit of the integration being performed by the computer, while the other four columns are the real and imaginary parts of the two integrals which appear in the expression for the defect voltage. These appear primarily to allow one to inspect the convergence of the integration. In addition to the phase of the defect sensitivity factor, the last line contains the magnitude of the defect sensitivity factor divided by the product of the frequency of the driving current, the number of turns on the driver and pickup coils, and the mean radius of the driver coil.

The example below is presented for additional aid to those who wish to use this program.

Sample Calculation of RFDFTB

Let us suppose that we wish to know the defect sensitivity factor for the case of two pickup coils positioned inside the driver coil and flush with its ends. The driver coil is assumed to be 2 in. long with inner and outer radii of 0.200 and 0.300 in., respectively, while the pickup coils are assumed to be 0.200 in. long with inner and outer radii of 0.100 and 0.150 in., respectively. The conductors are assumed to be 0.010 in. of copper clad on an effectively infinite thickness of aluminum

(at least four coil diameters or skin depths, whichever is smaller). Let us further suppose that we are interested in the defect sensitivity factor for the case in which the defect is located 0.015 in. below the surface of the copper, 0.250 in. from the coil axis. We shall assume the driving frequency to be 5 kHz and the lift-off to be 0.

First, we determine the mean radius of the driver coil to be 0.250 in., so that

Normalized inner radius of driver coil = 0.200/0.250 = 0.8
Normalized outer radius of driver coil = 0.300/0.250 = 1.2
Normalized inner radius of pickup coils = 0.100/0.250 = 0.4
Normalized outer radius of pickup coils = 0.150/0.250 = 0.6
Normalized lift-off = 0/0.250 = 0
Normalized length of driver coil = 2.000/0.250 = 8
Normalized length of pickup coils = 0.200/0.250 = 0.8
Normalized distance of pickup coils from ends of driver coil = 0
Normalized thickness of copper = 0.010/0.250 = 0.04
Normalized r position of defect = 0.250/0.250 = 1
Normalized z position of defect = 0.015/0.250 = 0.06

Furthermore,

Angular frequency of driving current = 10,000 π sec^{-1}
Permeability of <u>both</u> conductors = $4\pi \times 10^{-7}$ h/m
Conductivity of copper = 5.77×10^{7} mhos/m
Conductivity of aluminum = 2.86×10^{7} mhos/m

Thus,

$$\omega\mu_1\sigma_1\overline{r}^2 = 91.91$$
$$\omega\mu_2\sigma_2\overline{r}^2 = 45.48$$

This information is now typed into the program as follows:

```
12 LET R1 = 0.8
14 LET R2 = 1.2
16 LET R3 = 0.4
18 LET R4 = 0.6
20 LET L = 0
```

```
22 LET L1 = 8
24 LET L2 = 0.8
26 LET L3 = 0
28 LET M1 = 91.91
30 LET M2 = 45.48
32 LET C = 0.04
34 LET R = 1
36 LET Z1 = -0.06
```

The program is now run with the following results:

```
DEFECT PROGRAM FOR PHASE-SENSITIVE EDDY-CURRENT INSTRUMENT

DRIVER LENGTH IS 8          R1 = .8        R2 = 1.2
PICKUP LENGTH IS .8         R3 = .4        R4 = .6
CLAD THICKNESS IS .04       M1 = 91.91     M2 = 45.48
DEFECT LOCATION IS          R = 1          Z = -.06
PICKUP IS RECESSED 0        LIFT-OFF IS 0
X            REAL #1        IMAG #1        REAL #2        IMAG #2
5            1.11332E-2     -1.74977E-2    -1.35229E-3    2.29015E-3
10           1.37489E-2     -1.91176E-2    -4.49927E-4    1.72148E-3
15           1.39888E-2     -1.91847E-2    -6.7149E-4     1.78398E-3
20           .013965        -1.91809E-2    -6.57708E-4    1.78257E-3
25           1.39259E-2     -.019176       -6.55244E-4    1.78213E-3
30           1.39173E-2     -1.91751E-2    -6.57424E-4    1.78235E-3
VOLTAGE/FINN'R(BAR) = 4.73534E-8            PHASE = .981202
```

from which we see that the phase of the defect sensitivity factor is 0.981202, while its magnitude is the product of 0.473534×10^{-7}, the frequency of the driving current, the number of turns on the driver coil and pickup coils, and the mean radius of the driver coil.

RFDFTB Program

```
10 REM            RFDFTB            VERSION     10/6/70
12 LET R1=.8
14 LET R2=1.2
16 LET R3=.4
18 LET R4=.6
20 LET L=0
22 LET L1=8
24 LET L2=.8
26 LET L3=0
28 LET M1=91.91
30 LET M2=45.48
32 LET C=.04
34 LET R=1
36 LET Z1=-.06
```

```
38 PRINT"                    DEFECT PRØGRAM FØR PHASE SENSITIVE EDDY"
40 PRINT"                              CURRENT INSTRUMENT"
42 PRINT
44 PRINT
46 PRINT"DRIVER LENGTH IS";L1,"R1=";R1,"R2=";R2
48 PRINT"PICKUP LENGTH IS";L2,"R3=";R3,"R4=";R4
50 PRINT"CLAD THICKNESS IS";C,"M1=";M1,"M2=";M2
52 PRINT"DEFECT LØCATIØN IS","R=";R,"Z=";Z1
54 PRINT "PICKUP IS RECESSED";L3,"LIFT ØFF IS";L
56 PRINT"X","REAL #1","IMAG #1","REAL #2","IMAG #2"
58 LET S1=1E-2
60 LET S2=5
62 FØR I=1 TØ 2
64 LETR(I)=0
66 LETI(I)=0
68 NEXT I
70 LET B1=0
72 LET B2 =S2
74 FØRX=B1+S1/2TØB2STEPS1
76 LET Z=R2*X
78 LET Q1=R2
80 GØSUB 194
82 LETI2=F2
84 LET Z=R1*X
86 LET Q1=R1
88 GØ SUB 194
90 LET I1=F2
92 LET S3=(I2-I1)*S1*(EXP(-X*L)-EXP(-X*(L+L1)))
94 LET Z=R4*X
96 LETQ1=R4
98 GØ SUB 194
100 LET I4=F2
102 LET Z=R3*X
104 LET Q1=R3
106 GØ SUB 194
108 LET I3=F2
110 S4=(I4-I3)*S1*EXP(-X*L)*(1-EXP(-X*L2))*(EXP(-X*(L1-2*L3-L2))-1)
111 S4=S4*EXP(-X*L3)
112 LET X1 = .707107*SQR(SQR(X*X*X*X+M1*M1)+X*X)
114 LET Y1 = .707107*SQR(SQR(X*X*X*X+M1*M1)-X*X)
116 LET X2 = .707107*SQR(SQR(X*X*X*X+M2*M2)+X*X)
118 LET Y2=.707107*SQR(SQR(X*X*X*X+M2*M2)-X*X)
120 LET X3=EXP(2*X1*C)
122 LET Y3=CØS(2*Y1*C)
124 LET Y4=SIN(2*Y1*C)
126 LET X5=CØS((Y1+Y2)*C+Y2*Z1)
128 LET Y5=SIN((Y1+Y2)*C+Y2*Z1)
130 LET X6=2*EXP((X1+X2)*C+X2*Z1)
132 LET A5=X1*X5-Y1*Y5
134 LET B5=Y1*X5+X1*Y5
136 LET C6=(X+X1)*(X1+X2)-Y1*(Y1+Y2)
138 LET C7=Y1*(X1+X2)+(X+X1)*(Y1+Y2)
140 LET C5=(X-X1)*(X1-X2)+Y1*(Y1-Y2)+(C6*Y3-C7*Y4)*X3
142 LETD5=(X-X1)*(Y1-Y2)-Y1*(X1-X2)+(C7*Y3+C6*Y4)*X3
144 LETK1=X6*(A5*C5+B5*D5)/(C5*C5+D5*D5)
146 LET K2=X6*(C5*B5-A5*D5)/(C5*C5+D5*D5)
148 LETZ=X*R
150 GØSUB224
152 LETR(1)=R(1)+S3*K1*J1
154 LET I(1)=I(1)+S3*K2*J1
156 LET R(2)=R(2)+S4*K1*J1
```

```
158 LET I(2)=I(2)+S4*K2*J1
160 NEXT X
162 PRINT X+S1/2,R(1),I(1),R(2),I(2)
164 LETB1=B1+S2
166 LETB2=B2+S2
168 LETS1=5E-2
170 IF X<15 THEN 74
172 LET S1=.1
174 IF X<25 THEN 74
176 LET R(3)=R(1)*R(2)-I(1)*I(2)
178 LET I(3)=R(1)*I(2)+R(2)*I(1)
180 LET P=ATN(I(3)/R(3))
182 IF R(3)>0 THEN 186
184 LET P=P-PI
186 LET M=SQR(R(3)*R(3)+I(3)*I(3))
188 LET Q=3*2.4805E-5*M2/(2*PI*(R2-R1)*(R4-R3)*L1*L2)
190 PRINT"VØLTAGE/FINN'R(BAR)=";Q*M,"PHASE=";P
192 GØ TØ 246
194 IF Z>5 THEN 212
196 LETL5=INT(2*Z)+3
198 LETF1=.5*Q1*Q1*Z
200 LET F2=F1/3
202 FØRN=1TØL5
204 LETF1=-F1*.250*Z*Z/(N*N+N)
206 LETF2=F2+F1/(2*N+3)
208 NEXTN
210 GØTØ 222
212 LET P1=(((-188.1357/Z+109.1142)/Z-23.79333)/Z+2.050931)/Z
214 LET P1=((P1-.1730503)/Z+.7034845)/Z-.064109E-3
216 LET P2=(((-5.817517/Z+2.105874)/Z-.6896196)/Z+.4952024)/Z
218 LET P2=(P2-.187344E-2)/Z+.7979095
220 LET F2=(1-SQR(Z)*(P2*COS(Z-PI/4)-P1*SIN(Z-PI/4)))/(X*X)
222 RETURN
224 IFZ>3THEN 234
226 LET Q1=(((2.1E-11*Z↑2-5.38E-9)*Z↑2+6.757E-7)*Z↑2-5.42443E-5)*Z↑2
228 LET Q1=((Q1+2.60415E-3)*Z↑2-6.25E-2)*Z↑2+.5
230 LET J1=Z*Q1
232 GØTØ 244
234 LET Q3=(((-.14604057/Z+.27617679)/Z-.20210391)/Z+4.61835E-3)/Z
236 LET Q3=((Q3+.14937)/Z+4.68E-6)/Z+.79788456
238 LET Q4=(((-.21262014/Z+.19397232)/Z+6.022188E-2)/Z-1.7222733E-1)/Z
240 LET Q4=((Q4+5.085E-4)/Z+.37498836)/Z-2.35619449+Z
242 LET J1=Q3*COS(Q4)/SQR(Z)
244 RETURN
246 LET L=L+.1
248 PRINT
250 IF L<.25 THEN 46
252 END

READY
```

REFLECTION-TYPE COIL ABOVE A THREE-CONDUCTOR PLANE

This type of coil system is used with the phase-sensitive eddy-current instrument[9,10] and consists of a large driver coil surrounding small pickup coils at each end, wound in opposition to each other.

The program (3REFLT) in this section calculates the magnitude and phase of the voltage induced in the pickups of such a coil system.

Discussion of 3REFLT

This program is designed to calculate the differences in magnitude and phase of the voltages induced in twc oppositely wound pickup coils of the same size by the current in a large driver coil above a three-layered conductor (see Fig. 7). The pickup coils must be identical, equidistant from the respective ends of the driver coil, and be within its length. They must also be coaxial with the driver coil. All three conducting layers may have different permeabilities and electrical conductivities.

To use this program, one must first divide all dimensions by the mean radius of the driver coil. The results will, of course, be dimensionless and will be referred to as being "normalized." The product of the angular frequency of the driving current, the permeability, the conductivity, and the mean radius of the driver coil must be calculated for each conductor. Let this product be denoted by $\omega\mu_1\sigma_1\bar{r}^2$ for the upper layer, by $\omega\mu_2\sigma_2\bar{r}^2$ for the middle layer, and by $\omega\mu_3\sigma_3\bar{r}^2$ for the lower layer.

Once these calculations have been made, one need only type the following lines into the program. (Note: Parentheses are not typed.)

```
20 LET R1 = (numerical value of normalized inner radius of driver
            coil)
30 LET R2 = (numerical value of normalized outer radius of driver
            coil)
40 LET R3 = (numerical value of normalized inner radius of pickup
            coils)
```

---

[9] C. V. Dodd, Mater. Evaluation 22(6), 260–263 (1964).

[10] C. V. Dodd, Mater. Evaluation 26(3), 33–36 (1968).

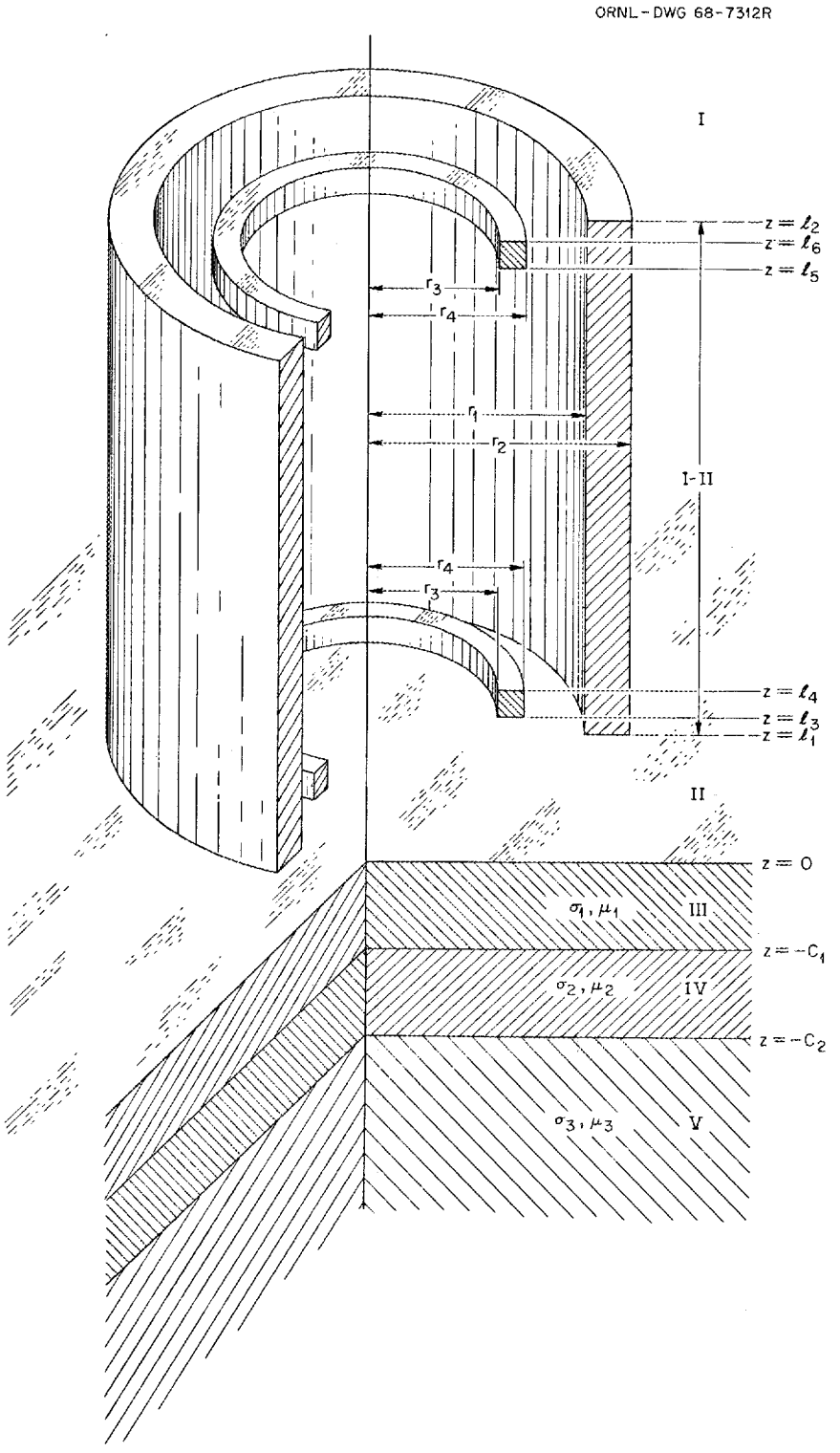

Fig. 7. Reflection-Type Coil Above a Three-Conductor Plane.

50 LET R4 = (numerical value of normalized outer radius of pickup coils)

60 LET L = (numerical value of normalized lift-off)

70 LET L2 = (numerical value of normalized length of driver coil)

80 LET L6 = (numerical value of normalized length of pickup coils)

90 LET L5 = (numerical value of normalized distance of pickup coils from the ends of the driver coil)

100 LET M1 = (numerical value of $\omega\mu_1\sigma_1\overline{r}^2$)

Note: If the conductivity of the upper conductor is zero, one must type two additional lines:

480 LET X1 = X

490 LET Y1 = 0

110 LET U1 = (numerical value of relative permeability of upper conductor)

120 LET M2 = (numerical value of $\omega\mu_2\sigma_2\overline{r}^2$)

Note: If the conductivity of the middle conductor is zero, one must type two additional lines:

510 LET X2 = X

520 LET Y2 = 0

130 LET U2 = (numerical value of relative permeability of middle conductor)

140 LET M3 = (numerical value of $\omega\mu_3\sigma_3\overline{r}^2$)

Note: If the conductivity of the lower conductor is zero, one must type two additional lines:

690 LET X3 = X

700 LET Y3 = 0

150 LET U3 = (numerical value of relative permeability of lower conductor)

160 LET C1 = (numerical value of normalized thickness of upper conductor)

170 LET C2 = (numerical value of normalized thickness of upper plus middle conductor)

The program may now be run.

The print-out by the computer will have the following format:

```
R1 = (R1)       R2 = (R2)            DRIVER LENGTH IS (L2)
R3 = (R3)       R4 = (R4)            PICKUP LENGTH IS (L6)
PICKUPS ARE RECESSED (L5)            CLAD1 = (C1)    CLAD2 = (C2)
LIFT-OFF = (L)
M1 = (M1)   U1 = (U1)   M2 = (M2)   U2 = (U2)  M3 = (M3)   U3 = (U3)
X                     MAGNITUDE                PHASE
5                       -----                  -----
10                      -----                  -----
15                      -----                  -----
20                      -----                  -----
VOLTAGE/FINN'R(BAR) = -----
```

The various symbols enclosed in parentheses are used here to indicate that the numerical value of the symbol will be printed. The first column, headed "X," is the upper limit of the integration being performed by the computer. The other two columns have self-explanatory headings. The last line printed is the magnitude of the peak (or root mean square) voltage difference divided by the product of the frequency of the driving current, the magnitude of the peak (or root mean square) current, the number of turns on the driver coil, the number of turns on a pickup coil, and the mean radius of the driver coil in meters.

The example below is presented for additional aid to those who wish to use this program.

Sample Calculation of 3REFLT

Let us suppose that we wish to know the difference in the voltages induced in two pickup coils positioned inside the driver coil and flush with its ends. The driver coil is assumed to be 2 in. long with inner and outer radii of 0.200 and 0.300 in., respectively, while the pickup coils are assumed to be 0.200 in. long with inner and outer radii of 0.100 and 0.150 in., respectively. The conductors are taken to be 0.005 in. of silver clad on 0.005 in. of copper which is in turn clad on an effectively infinite thickness of aluminum (at least four coil diameters or skin depths, whichever is smaller). The driving current frequency is assumed to be 5 kHz; the lift-off 0.005 in.

First, we determine the mean coil radius to be 0.250 in., so that

Normalized inner radius of driver coil = 0.200/0.250 = 0.8

Normalized outer radius of driver coil = 0.300/0.250 = 1.2

Normalized inner radius of pickup coil = 0.100/0.250 = 0.4

Normalized outer radius of pickup coil = 0.150/0.250 = 0.6

Normalized length of driver coil = 2.000/0.250 = 8

Normalized length of pickup coil = 0.200/0.250 = 0.8

Normalized lift-off = 0.005/0.250 = 0.02

Normalized distance of pickup coils from ends of driver coil = 0

Normalized thickness of silver = 0.005/0.250 = 0.02

Normalized thickness of silver plus copper = 0.010/0.250 = 0.04

Thus,

$$\omega\mu_1\sigma_1\overline{r}^2 = 97.79$$
$$\omega\mu_2\sigma_2\overline{r}^2 = 91.91$$
$$\omega\mu_3\sigma_3\overline{r}^2 = 45.48$$

This information is now typed into the program as follows:

```
20 LET R1 = 0.8
30 LET R2 = 1.2
40 LET R3 = 0.4
50 LET R4 = 0.6
60 LET L = 0.02
70 LET L2 = 8
80 LET L6 = 0.8
90 LET L5 = 0
100 LET M1 = 97.79
110 LET U1 = 1
120 LET M2 = 91.91
130 LET U2 = 1
140 LET M3 = 45.48
150 LET U3 = 1
160 LET C1 = 0.02
170 LET C2 = 0.04
```

The program is now run with the following results:

```
R1 = .8          R2 = 1.2                DRIVER LENGTH IS 8
R3 = .4          R4 = .6                 PICKUP LENGTH IS .8
PICKUPS ARE RECESSED 0                   CLAD1 = .02    CLAD2 = .04
LIFT-OFF = .02
M1 = 97.79   U1 = 1   M2 = 91.91   U2 = 1   M3 = 45.48   U3 = 1
X                    MAGNITUDE            PHASE
5.                   3.82381E-3           1.84004
10.                  3.7808E-3            1.83069
15.                  3.78128E-3           1.83092
20.                  3.78128E-3           1.83093
VOLTAGE/FINN'R(BAR) = 1.83193E-7
```

from which we see that the phase of the voltage difference is 1.83093 (i.e., the phase value for X = 20). The actual magnitude of the voltage difference is obtained by multiplying the last line by the frequency of the driving current (5000), the magnitude of the current, the number of turns on the driver coil, the number of turns on a pickup coil, and the mean radius of the driver coil in meters.

3REFLT Program

```
10 REM            3REFLT          VERSIØN  02/04/70
20 LET R1=.8
30 LET R2=1.2
40 LET R3=.4
50 LET R4=.6
60 LET L=.02
70 LET L2=8
80 LET L6=.8
90 LET L5=0
100 LET M1=91.91
110 LET U1=1
120 LET M2=45.48
130 LET U2=1
140 LET M3=55
150 LET U3=1
160 LET C1=.04
170 LET C2=.08
180 PRINT "R1=";R1, "R2=";R2, "DRIVER LENGTH IS";L2
190 PRINT "R3=";R3, "R4=";R4, "PICKUP LENGTH IS";L6
200 PRINT "PICKUPS ARE RECESSED";L5, "CLAD1=";C1, "CLAD2=";C2
210 PRINT "LIFTØFF=";L
220 PRINT "M1=";M1; "U1=";U1; "M2=";M2; "U2=";U2; "M3=";M3; "U3=";U3
230 PRINT "X", "MAGNITUDE", "PHASE"
240 LET S1=1E-2
250 LET S2=5
260 LET I6=0
270 LET I8=0
280 LET B1=0
290 LET B2 =S2
300 FØR X = B1 +S1/2 TØ B2 STEP S1
310 LET Z=R2*X
320 LET Q1=R2
```

```
330 GØSUB 1240
340 LET I2=F2
350 LET Z=R1*X
360 LET Q1=R1
370 GØSUB 1240
380 LET I1=F2
390 LET Z=R4*X
400 LET Q1=R4
410 GØSUB 1240
420 LET J2=F2
430 LET Z=R3*X
440 LET Q1=R3
450 GØSUB 1240
460 LET J1=F2
470 LET S3=S1*(I2-I1)*(J2-J1)
480 LET X1=.707106781*SQR(SQR(X*X*X*X+M1*M1)+X*X)/U1
490 LET Y1=.707106781*SQR(SQR(X*X*X*X+M1*M1)-X*X)/U1
500 IF X1*C1*U1>15 THEN 930
510 LET X2=.707106781*SQR(SQR(X*X*X*X+M2*M2)+X*X)/U2
520 LET Y2=.707106781*SQR(SQR(X*X*X*X+M2*M2)-X*X)/U2
530 LET X4=EXP(2*X1*C1*U1)
540 LET Y4=CØS(2*Y1*C1*U1)
550 LET Y5=SIN(2*Y1*C1*U1)
560 LET A1=(X-X1)*(X1+X2)+Y1*(Y1+Y2)
570 LET A2=(X-X1)*(Y1+Y2)-Y1*(X1+X2)
580 LET D1=(X+X1)*(X1-X2)-Y1*(Y1-Y2)
590 LET D2=(X+X1)*(Y1-Y2)+Y1*(X1-X2)
600 LET A5=D1+(A1*Y4-A2*Y5)*X4
610 LET B5=D2+(A2*Y4+A1*Y5)*X4
620 LET A4=(X+X1)*(X1+X2)-Y1*(Y1+Y2)
630 LET D4=(X+X1)*(Y1+Y2)+Y1*(X1+X2)
640 LET A3=(X-X1)*(X1-X2)+Y1*(Y1-Y2)
650 LET D3=(X-X1)*(Y1-Y2)-Y1*(X1-X2)
660 LET C5=A3+(A4*Y4-D4*Y5)*X4
670 LET D5=D3+(D4*Y4+A4*Y5)*X4
680 IF (X1*C1*U1+X2*(C2-C1)*U2)>15 THEN 970
690 LET X3=.707106781*(SQR(SQR(X*X*X*X+M3*M3)+X*X))/U3
700 LET Y3=.707106781*(SQR(SQR(X*X*X*X+M3*M3)-X*X))/U3
710 LET X5=EXP(2*X2*(C2-C1)*U2)
720 LET Y6=CØS(2*Y2*(C2-C1)*U2)
730 LET Y7=SIN(2*Y2*(C2-C1)*U2)
740 LET G1=X2+X3
750 LET G2=Y2+Y3
760 LET G3=X2-X3
770 LET G4=Y2-Y3
780 LET G5=G1*A5-G2*B5
790 LET G6=G1*B5+G2*A5
800 LET A6=A3*Y4-D3*Y5
810 LET D6=A3*Y5+D3*Y4
820 LET A7= X5*(G5*Y6-G6*Y7)+G3*(A4+X4*A6)-G4*(D4+X4*D6)
830 LET D7=X5*(G5*Y7+G6*Y6)+G3*(D4+X4*D6)+G4*(A4+X4*A6)
840 LET G7=G1*C5-G2*D5
850 LET G8=G1*D5+G2*C5
860 LET B6=D1*Y4-D2*Y5
870 LET C6=D1*Y5+D2*Y4
880 LET A8=X5*(G7*Y6-G8*Y7)+G3*(A1+X4*B6)-G4*(A2+X4*C6)
890 LET D8=X5*(G7*Y7+G8*Y6)+G3*(A2+X4*C6)+G4*(A1+X4*B6)
900 LET K1=(A7*A8+D7*D8)/(A8*A8+D8*D8)
910 LET K2=(A8*D7-A7*D8)/(A8*A8+D8*D8)
920 GØ TØ 990
930 LET A5 =X-X1
```

```
940 LET B5=-Y1
950 LET C5=X+X1
960 LET D5=Y1
970 LET K1=(A5*C5+B5*D5)/(C5*C5+D5*D5)
980 LET K2=(C5*B5-A5*D5)/(C5*C5+D5*D5)
990 IF X*L2>50 THEN 1030
1000LETG=EXP(-X*L5)+EXP(-X*(L2-L5))-EXP(-X*(L2-L5-L6))-EXP(-X*(L5+L6))
1010 LET G5=EXP(-X*L2)-1
1020 GØ TØ 1050
1030 LET G=EXP(-X*L5)*(1-EXP(-X*L6))
1040 LET G5=-1
1050 LET G6=G*G5*EXP(-2*X*L)
1060 LET I6=I6+G6*K1*S3
1070 LET I8=I8+G6*K2*S3
1080 NEXT X
1090 LET B1=B2
1100 LET B2=B2+S2
1110 LET Q1=SQR(I6*I6+I8*I8)
1120 LET Q2=ATN(-I6/I8)
1130 IF I8<0 THEN 1150
1140 LET Q2=Q2+PI
1150 PRINT X+S1/2, Q1, Q2
1160 IF X < 3 THEN 300
1170 LET S1=5E-2
1180 IF X<9 THEN 300
1190 LET S1=.1
1200 IF X<19 THEN 300
1210 PRINT "    VØLTAGE/FINN'R(BAR)=";
1220 PRINT 2.4805E-5*Q1/((R4-R3)*(R2-R1)*L2*L6)
1230 GØ TØ 1390
1240 IF Z>5 THEN 1330
1250 LET L9=INT(2*Z)+3
1260 LET F1=.5*Q1*Q1*Q1
1270 LET F2=F1/3
1280 FØR N=1TØL9
1290 LETF1=-F1*.250*Z*Z/(N*N+N)
1300 LETF2=F2+F1/(2*N+3)
1310 NEXTN
1320 GØTØ 1380
1330 LET Q1=(((-188.1357/Z+109.1142)/Z-23.79333)/Z+2.050931)/Z
1340 LET Q1=((Q1-.1730503)/Z+.7034845)/Z-.064109E-3
1350 LET Q2=(((-5.817517/Z+2.105874)/Z-.6896196)/Z+.4952024)/Z
1360 LET Q2=(Q2-.187344E-2)/Z+.7979095
1370 LET F2=(1-SQR(Z)*(Q2*CØS(Z-PI/4)-Q1*SIN(Z-PI/4)))/(X*X*X)
1380 RETURN
1390 END
```

THROUGH-TRANSMISSION COILS

This type of coil and conductor configuration, shown in Fig. 8, is also used with the phase-sensitive eddy-current instrument. It consists of a large driver coil and a pickup coil on opposite sides of a conductor. The signal transmitted by the driver coil passes through the conductor and is then detected by the pickup coil.

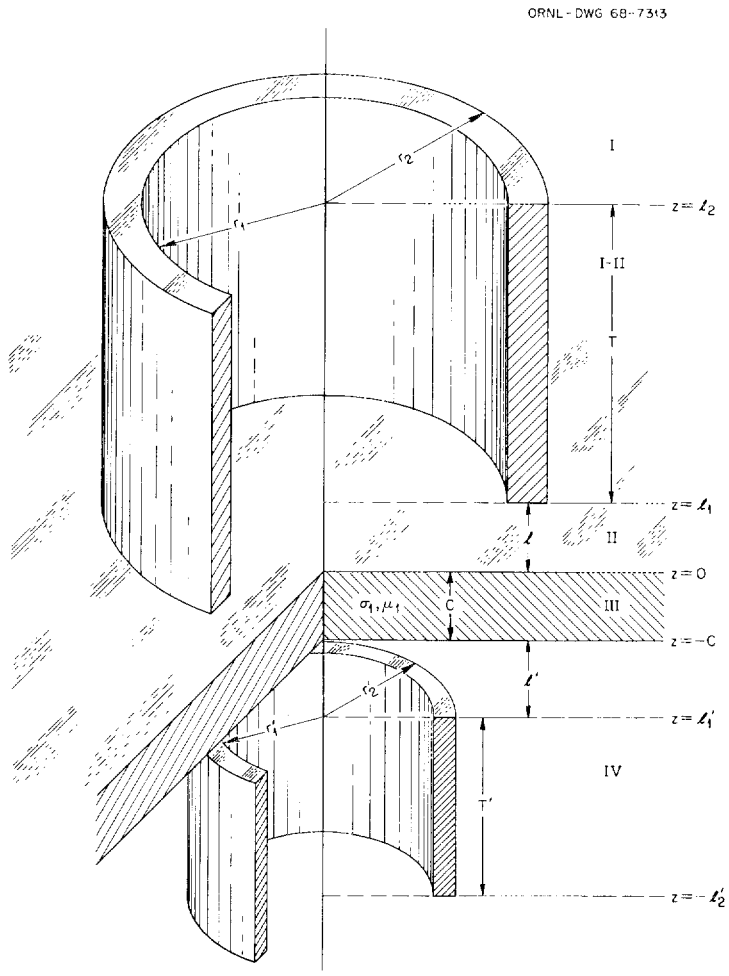

Fig. 8. A Through-Transmission Coil Arrangement.

In this section there are programs that calculate the magnitude and phase of the induced voltage (THRU) and the change in the magnitude and phase of the induced voltage due to a defect (THRUDF). In addition, the program, DISC, in the preceding section can be used to calculate the phase shift of the induced voltage with the lift-off set.

Magnitude and Phase of Induced Voltage

Discussion of THRU

This program is designed to calculate the magnitude and phase of the "voltage" induced in a pickup coil of rectangular cross section by the current in a driver coil of rectangular cross section positioned on the

opposite side of a conducting plate. The coils must be coaxial but may have different lengths and radii. The physical situation is shown in Fig. 8.

To use this program, one must first divide all dimensions by the mean radius of the driver coil. The results will, of course, be dimensionless and will be referred to as being "normalized." The product of the angular frequency of the driving current, the permeability, the conductivity, and the square of the mean driver coil radius must be calculated for the conducting plate. Let this product be denoted by $\omega\mu_1\sigma_1\bar{r}^2$.

Once these calculations have been made, one need only type the following lines into the program. (Note: Parentheses are not typed.)

20 LET R1 = (numerical value of normalized inner radius of driver coil)

30 LET R2 = (numerical value of normalized outer radius of driver coil)

40 LET R3 = (numerical value of normalized inner radius of pickup coil)

50 LET R4 = (numerical value of normalized outer radius of pickup coil)

60 LET L = (normalized lift-off of driver coil plus normalized lift-off of pickup coil)

70 LET L2 = (normalized length of driver coil)

80 LET L4 = (normalized length of pickup coil)

90 LET M1 = (numerical value of $\omega\mu_1\sigma_1\bar{r}^2$)

Note: If the conductivity of the conducting plate is zero, one must type two additional lines:

400 LET X1 = X

410 LET Y1 = 0

100 LET U1 = (numerical value of relative permeability of conducting plate)

110 LET C = (numerical value of normalized thickness of conducting plate)

The program may now be run.

The print-out by the computer will have the following format:

```
R1 = (R1)            R2 = (R2)        R3 = (R3)     R4 = (R4)
L2 = (L2)            L4 = (L4)        LIFT-OFF = (L1)
THICKNESS = (C)      M1 = (M1)        U1 = (U1)
X                 REAL OF PICKUP   IMAG OF PICKUP
1.                   ------           ------
2.                   ------           ------
3.                   ------           ------
4.                   ------           ------
5.                   ------           ------
10.                  ------           ------
15.                  ------           ------
25.                  ------           ------
35.                  ------           ------
MAGNITUDE IS ------                   PHASE IS ------
       VOLTAGE/FINN'R(BAR) = ------
```

The various symbols enclosed in parentheses are used here to indicate that the numerical value of the symbol will be printed. The first column, headed "X," is the upper limit of the integration being performed by the computer. The other two columns are the real and imaginary parts of the integral. The next to the last line contains the magnitude and phase of the integral. The last line printed is the magnitude of the peak (or root mean square) induced voltage divided by the product of the frequency of the driving current, the magnitude of the peak (or root mean square) current, the number of turns on the driver coil, the number of turns on the pickup coil, and the mean radius of the driver coil in meters.

The example below is presented for additional aid to those who wish to use this program.

Sample Calculation of THRU

Suppose that we wish to know the voltage induced in a pickup coil 0.025 in. long with inner and outer radii of 0.4875 and 0.5125 in., respectively, by the current in a driver coil positioned on the opposite side of a 0.250-in.-thick copper plate. The driver is assumed to be 0.800 in. long with inner and outer radii of 0.100 and 0.900 in., respectively. The frequency of the driving current is assumed to be 1.25 kHz, the lift-off of the driver coil to be 0.0125 in., and the lift-off of the pickup coil to be 0.0125 in.

First, we determine the mean radius of the driver coil to be 0.500 in., so that

Normalized inner radius of driver coil = 0.100/0.500 = 0.2
Normalized outer radius of driver coil = 0.900/0.500 = 1.8
Normalized inner radius of pickup coil = 0.4875/0.500 = 0.0975
Normalized outer radius of pickup coil = 0.5125/0.500 = 1.025
Normalized lift-off of driver coil = 0.0125/0.500 = 0.025
Normalized lift-off of pickup coil = 0.0125/0.500 = 0.025
Normalized length of driver coil = 0.800/0.500 = 1.6
Normalized length of pickup coil = 0.025/0.500 = 0.05
Normalized thickness of copper plate = 0.250/0.500 = 0.5

Furthermore,

Angular frequency of driving current = $2\pi \times 1250$ sec^{-1}
Permeability of copper = $4\pi \times 10^{-7}$ h/m
Relative permeability of copper = 1
Conductivity of copper = 5.77×10^{7} mhos/m

Thus,

$$\omega\mu_1\sigma_1\bar{r}^2 = 91.91$$

This information is now typed into the program in the following format:

```
20 LET R1 = 0.2
30 LET R2 = 1.6
40 LET R3 = 0.0975
50 LET R4 = 1.025
60 LET L = 0.05
70 LET L2 = 1.6
80 LET L4 = 0.05
90 LET M1 = 91.91
100 LET U1 = 1
110 LET C = 0.5
```

The program is now run with the following results:

```
R1 = 0.2            R2 = 1.6          R3 = 0.0975      R4 = 1.025
L2 = 1.6            L4 = 0.5B-01      LIFT-OFF = 0.5E-01
THICKNESS = 0.5     M1 = 91.91        U1 = 1
X                   REAL OF PICKUP    IMAG OF PICKUP
1                  -0.2095097E-05     0.2713761E-05
2                  -0.1267416E-04     0.1313368E-04
3                  -0.2058863E-04     0.1865904E-04
4                  -0.2141352E-04     0.1906794E-04
5                  -0.211496E-04      0.1901738E-04
10                 -0.2112395E-04     0.1902734E-04
15                 -0.2112471E-04     0.190259E-04
25                 -0.2112472E-04     0.1902593E-04
35                 -0.2112472E-04     0.1902593E-04
MAGNITUDE IS 0.2842956E-04            PHASE IS -3.979216
VOLTAGE/FINN'R(BAR) = 0.2715425E-07
```

from which we see that the phase of the induced voltage is −3.979216. The actual magnitude of the induced voltage is obtained by multiplying the last line by the frequency of the driving current (1250), the magnitude of the current, the number of turns on the driver coil, the number of turns on the pickup coil, and the mean radius of the driver coil in meters.

THRU Program

```
10 REM            THRU            VERSIØN  02/04/70
20 LET R1=0
30 LET R2=2
40 LET R3=.975
50 LET R4=1.025
60 LET L=0
70 LET L2=2
80 LET L4=.05
90 LET M1=77.05
100 LET U1=100
110 LET C=.5
120 PRINT "R1=";R1,"R2=";R2,"R3=";R3,"R4=";R4
130 PRINT"L2=";L2,"L4=";L4,"LIFTØFF=";L
140PRINT"THICKNESS=";C,"M1=";M1,"U1=";U1
150 PRINT"X","REAL ØF PICKUP","IMAG ØF PICKUP"
160 LET S1=1E-2
170 LET S2=1
180 LET I6=0
190 LET I8=0
200 LET B1=0
210 LET B2 =S2
```

```
220 FØR X=B1+(S1)/2 TØ B2 STEP S1
230 LET Z=R2*X
240 LET Q1=R2
250 GØSUB 760
260 LET I2=F2
270 LET Z=R1*X
280 LET Q1=R1
290 GØSUB 760
300 LET I1=F2
310 LET Z=R4*X
320 LET Q1=R4
330 GØSUB 760
340 LET J2=F2
350 LET Z=R3*X
360 LET Q1=R3
370 GØSUB 760
380 LET J1=F2
390 LET S3=X*S1*(I2-I1)*(J2-J1)
400 LET X1=.707107*(SQR(SQR(X*X*X*X+M1*M1)+X*X))/U1
410 LET Y1=.707107*(SQR(SQR(X*X*X*X+M1*M1)-X*X))/U1
420 LET X3=EXP(2*X1*C*U1)
430 LET Y3=CØS(2*Y1*C*U1)
440 LET Y4=SIN(2*Y1*C*U1)
450 LET A3=X1*CØS(Y1*C*U1)-Y1*SIN(Y1*C*U1)
460 LET B3=Y1*CØS(Y1*C*U1)+X1*SIN(Y1*C*U1)
470 LETC1=((X+X1)*(X+X1)-Y1*Y1)*Y3-2*Y1*(X+X1)*Y4
480 LETC2=Y1*Y1-(X-X1)*(X-X1)+X3*C1
490 LETD1=Y4((X+X1)*(X+X1)-Y1*Y1)+2*Y1*(X+X1)*Y3
500 LETD2=2*Y1*(X-X1)+X3*D1
510ETK1= A3*C2+B3*D2)/(C2*C2+D2*D2)
520 LETK2=(B3*C2-A3*D2)/(C2*C2+D2*D2)
530 LETG=(1-EXP(-X*L2))*(1-EXP(-X*L4))*EXP(-L*X+X1*C)
540LETI6=I6+S3*K1*G
550LETI8=I8+S3*K2*G
560 NEXT X
570LETB1=B2
580 LETB2=B2+S2
590 PRINT X+S1/2,I6,I8
600 IFX<3.5THEN220
610 LET S1=5E-2
620LETS2=5
630IFX<9THEN220
640LETS2=10
650LETS1=.1
660IFX<25THEN220
670 LETQ1=SQR(I6*I6+I8*I8)
680 LET Q2=ATN(-I6/I8)
690 IF I8<0 THEN 710
700 LET Q2=Q2+PI
710 PRINT"MAGNITUDE IS";Q1,"PHASE IS";-Q2
720 PRINT "          VØLTAGE/FINN'R(BAR)=";
730 PRINT 9.92201E-5*Q1/((R4-R3)*(R2-R1)*L2*L4)
```

```
740PRINT
750 GØ TØ 910
760 IFZ>5 THEN 850
770 LET L9=INT(2*Z)+3
780 LET F1=.5*Q1*Q1*Q1
790 LET F2=F1/3
800 FØR N=1TØL9
810 LETF1=-F1*.250*Z*Z/(N*N+N)
820 LETF2=F2+F1/(2*N+3)
830 NEXTN
840 GØTØ 900
850 LET Q1=(((-188.1357/Z+109.1142)/Z-23.79333)/Z+2.050931)/Z
860 LET Q1=((Q1-.1730503)/Z+.7034845)/Z-.064109E-3
870 LET Q2=(((-5.817517/Z+2.105874)/Z-.6896196)/Z+.4952024)/Z
880 LET Q2=(Q2-.187344E-2)/Z+.7979095
890 LET F2=(1-SQR(Z)*(Q2*CØS(Z-PI/4)-Q1*SIN(Z-PI/4)))/(X*X*X)
900 RETURN
910 END
```

Change in Magnitude and Phase of Induced Voltage Due to a Defect in the Plate Between the Coils

Discussion of THRUDF

This program is designed to calculate the defect sensitivity factor for a pickup coil of rectangular cross section due to the current in a driver coil of rectangular cross section positioned on the opposite side of the conducting plate containing the defect. The coils must be coaxial but may have different lengths and radii. The physical situation is shown in Fig. 8, p. 120.

To use the program, one must first divide all dimensions by the mean driver coil radius. The results will, of course, be dimensionless and will be referred to as being "normalized." The product of the angular frequency of the driving current, the permeability, the conductivity, and the square of the mean driver coil radius must be calculated for the conducting plate. Let this product be denoted by $\omega\mu_1\sigma_1\bar{r}^2$.

Once these calculations have been made, one need only type the following lines into the program. (Note: Parentheses are not typed.)

12 LET R1 = (numerical value of normalized inner radius of driver coil)

14 LET R2 = (numerical value of normalized outer radius of driver coil)

16 LET R3 = (numerical value of normalized inner radius of pickup coil)

18 LET R4 = (numerical value of normalized outer radius of pickup coil)

20 LET L1 = (numerical value of normalized lift-off of driver coil)

22 LET T1 = (numerical value of normalized length of driver coil)

24 LET L2 = (numerical value of normalized lift-off of pickup coil)

26 LET T2 = (numerical value of normalized length of pickup coil)

28 LET M1 = (normalized $\omega\mu_1\sigma_1\overline{r}^2$)

30 LET C = (normalized thickness of conducting plate)

32 LET R = (normalized r position coordinate of defect)

34 LET Z1 = (normalized z position coordinate of defect)

The program may now be run.

The print-out by the computer will have the following format:

```
DRIVER LENGTH IS (T1)          R1 = (R1)    R2 = (R2)
PICKUP LENGTH IS (T2)          R3 = (R3)    R4 = (R4)
DRIVER LIFT-OFF IS (L1)        PICKUP LIFT-OFF IS (L2)
PLATE THICKNESS IS (C)         M1 = (M1)
DEFECT POSITION IS             R = (R)      Z = (Z1)
X                 REAL #1      IMAG #1      REAL #2      IMAG #2
1                 ------       ------       ------       ------
2                 ------       ------       ------       ------
3                 ------       ------       ------       ------
4                 ------       ------       ------       ------
5                 ------       ------       ------       ------
10                ------       ------       ------       ------
15                ------       ------       ------       ------
20                ------       ------       ------       ------
25                ------       ------       ------       ------
30                ------       ------       ------       ------
35                ------       ------       ------       ------
VOLTAGE/FINN R'(BAR) = ------                PHASE = ------
```

The various symbols enclosed in parentheses are used here to indicate that the numerical value of the symbol will be printed. The first column, headed "X," is the upper limit of the integration being performed by the computer, while the other four columns are the real and imaginary parts of the two integrals which appear in the expression for the defect induced voltage. These appear primarily to allow one to inspect the convergence of the integration. In addition to the phase of the defect

sensitivity factor, the last line contains the magnitude of the defect sensitivity factor divided by the product of the frequency of the driving current, the number of turns on the driver and pickup coils, and the mean radius of the driver coil.

The example below is presented for additional aid to those who wish to use the program.

Sample Calculation of THRUDF

Suppose that we wish to know the defect sensitivity factor for a pickup coil 0.025 in. long with inner and outer radii of 0.4875 and 0.5125 in., respectively, positioned on the opposite side of a 0.250-in.-thick copper plate from a driver coil that is 0.800 in. long with inner and outer radii of 0.100 and 0.900 in., respectively. Let us further suppose that we are interested in the defect sensitivity factor for the coil in which the defect is located 0.125 in. below the surface of the copper 0.500 in. from the coil axis. The frequency of the driving current is assumed to be 1.25 kHz, the lift-off of the driver coil to be 0.0125 in., and the lift-off of the pickup coil to be 0.0125 in.

First, we determine the mean radius of the driver coil to be 0.500 in., so that

Normalized inner radius of driver coil = 0.100/0.500 = 0.2
Normalized outer radius of driver coil = 0.900/0.500 = 1.8
Normalized inner radius of pickup coil = 0.4875/0.500 = 0.0975
Normalized outer radius of pickup coil = 0.5125/0.500 = 1.025
Normalized lift-off of driver coil = 0.0125/0.500 = 0.025
Normalized lift-off of pickup coil = 0.0125/0.500 = 0.025
Normalized length of driver coil = 0.800/0.500 = 1.6
Normalized length of pickup coil = 0.0125/0.500 = 0.025
Normalized thickness of copper plate = 0.250/0.500 = 0.5
Normalized r position of defect = 0.500/0.500 = 1
Normalized z position of defect = 0.125/0.500 = 0.25

Furthermore,

Angular frequency of driving current = $2\pi \times 1250\ \mathrm{sec}^{-1}$
Permeability of copper = $4\pi \times 10^{-7}$ mhos/m

Relative permeability of copper = 1

Conductivity of copper = 5.77×10^7 mhos/m

Thus,

$$\omega\mu_1\sigma_1\bar{r}^2 = 91.91$$

This information is now typed into the program in the following format:

```
12 LET R1 = 0.2
14 LET R2 = 1.8
16 LET R3 = 0.0975
18 LET R4 = 1.025
20 LET L1 = 0.025
22 LET T1 = 1.6
24 LET L2 = 0.025
26 LET T2 = 0.05
28 LET M1 = 91.91
30 LET C = 0.5
32 LET R = 1
34 LET Z1 = -0.25
```

The program is now run with the following results:

```
DRIVER LENGTH IS 1.6          R1 = 0.2        R2 = 1.8
PICKUP LENGTH IS 0.5E-01      R3 = 0.0975     R4 = 1.025
DRIVER LIFT-OFF IS 0.25E-01   PICKUP LIFT-OFF IS 0.25E-01
PLATE THICKNESS IS 0.5        M1 = 91.91
DEFECT POSITION IS            R = 1           Z = -0.25
X              REAL #1        IMAG #1         REAL #2         IMAG #2
1            0.0629491E-01  0.0632373E-01  0.0691648E-03  0.0694502E-0
2            0.3331064E-01  0.328999E-01   0.0712987E-02  0.0700937E-0
3            0.464029E-01   0.453173E-01   0.1760296E-02  0.1686355E-0
4            0.4647456E-01  0.4538658E-01  0.2099335E-02  0.1990084E-0
5            0.4626008E-01  0.4522971E-01  0.1793536E-02  0.1744791E-0
10           0.4658471E-01  0.4536996E-01  0.1921084E-02  0.17991E-02
15           0.4640574E-01  0.4533249E-01  0.1934439E-02  0.1801759E-0
25           0.4642996E-01  0.4533432E-01  0.1946801E-02  0.1802697E-0
35           0.4643259E-01  0.4533443E-01  0.1949332E-02  0.1802795E-0
VOLTAGE/FINN'R(BAR) = 0.0789925E-05        PHASE = 1.5197954
```

From this we see that the phase of the defect sensitivity factor is 1.5197954, while its actual magnitude is obtained by multiplying 7.89925×10^{-7} by the frequency of the driving current (1250), the number

of turns on the driver coil, the number of turns on the pickup coil, and the mean radius of the driver coil in meters.

THRUDF Program

```
10 REM          THRUDF          VERSIØN         03/03/69
12 LET R1=.2
14 LET R2=1.8
16 LET R3=.0975
18 LET R4=1.025
20 LET L1=.025
22 LET T1=1.6
24 LET L2=.025
26 LET T2=.05
28 LET M1=91.91
30 LET C=.5
32 LET R=1
34 LET Z1=-.25
36 PRINT"DRIVER LENGTH IS";T1,"R1=";R1,"R2=";R2
38 PRINT"PICKUP LENGTH IS";T2,"R3=";R3,"R4=";R4
40 PRINT"DRIVER LIFTØFF IS";L1,"PICKUP LIFTØFF IS";L2
42 PRINT"PLATE THICKNESS IS";C,"M1=";M1
44 PRINT"DEFECT PØSITIØN IS","R=";R,"Z=";Z1
46 PRINT"X","REAL \1","IMAG \1","REAL \2","IMAG \2"
48 LET S1=1E-2
50 LET S2=1
52 FØR J=1 TØ 2
54 LET R(J)=0
56 LET I(J)=0
58 NEXT J
60 LET B1=0
62 LET B2=S2
64 FØR X=B1+S1/2 TØ B2 STEP S1
66 LET Z=R2*X
68 LET Q1=R2
70 GØ SUB 210
72 LET I2=F2
74 LET Z=R1*X
76 LET Q1=R1
78 GØ SUB 210
80 LET I1=F2
82 LET Z=R4*X
84 LET Q1=R4
86 GØ SUB 210
88 LET J3=F2
90 LET Z=R3*X
92 LET Q1=R3
94 GØ SUB 210
96 LET J2=F2
98 LET Z=R*X
100 GØ SUB 240
102 LET S3=S1*(I2-I1)*J1
104 LET S4=S1*(J3-J2)*J1
106 LET X1=.707107*SQR(SQR(X*X*X*X+M1*M1)+X*X)
108 LET Y1=.707107*SQR(SQR(X*X*X*X+M1*M1)-X*X)
110 LET X3=EXP(2*X1*C)
```

```
112 LET Y3=CØS(2*Y1*C)
114 LET Y4=SIN(2*Y1*C)
116 LET C6=(X+X1)*(X1+X2)-Y1*(Y1+Y2)
118 LET C7=Y1*(X1+X2)+(X+X1)*(Y1+Y2)
120 LET C5=(X-X1)*(X1-X2)+Y1*(Y1-Y2)+(C6*Y3-C7*Y4)*X3
122 LETD5=(X-X1)*(Y1-Y2)-Y1*(X1-X2)+(C7*Y3+C6*Y4)*X3
124 LET K=C5*C5+D5*D5
126 LET A1=X3*((X+X1)*Y3-Y1*Y4)
128 LET C1=X3*((X+X1)*Y4+Y1*Y3)
130 LET L=L1
132 LET T=T1
134 LET Y=Z1
136 GØ SUB 262
138 LET A4=A2
140 LET B4=C2
142 LET L=L2
144 LET T=T2
146 LET Y=-(Z1+C)
148 GØ SUB 262
150 LET A5=A2
152 LET B5=C2
154 LET K1=(A4*C5+B4*D5)/K
156 LET K2=(A4*D5-B4*C5)/K
158 LET K3=(A5*C5+B5*D5)/K
160 LET K4=(A5*D5-B5*C5)/K
162 LET R(1)=R(1)+S3*K1
164 LET I(1)=I(1)+S3*K2
166 LET R(2)=R(2)+S4*K3
168 LET I(2)=I(2)+S4*K4
170 NEXT X
172 PRINT X+S1/2,R(1),I(1),R(2),I(2)
174 LET B1=B1+S2
176 LET B2=B2+S2
178 IF X<3.5 THEN 64
180 LET S1=5E-2
182 LET S2=5
184 IF X<9 THEN 64
186 LET S1=.1
188 LET S2=10
190 IF X<25 THEN 64
192 LET R(3)=R(1)*R(2)-I(1)*I(2)
194 LET I(3)=R(1)*I(2)+R(2)*I(1)
196 LET M=SQR(R(3)*R(3)+I(3)*I(3))
198 LET P=ATN(I(3)/R(3))
200 IF R(3)>0 THEN 204
202 LET P=P+PI
204 LET Q=3*2.4805E-5*M1/(4*PI*T1*T2*(R2-R1)*(R4-R3))
206 PRINT "VØLTAGE/FINN'R(BAR)-";Q*M,"PHASE-";P
208 GØ TØ 276
210 IFZ>5THEN 228
212 LETL5=INT(2*Z)+3
214 LETF1=.5*Q1*Q1*Z
216 LET F2=F1/3
218 FØRN=1TØL5
220 LETF1=-F1*.250*Z*Z/(N*N+N)
222 LETF2=F2+F1/(2*N+3)
224 NEXTN
226 GØTØ 238
228 LET Q1=(((-188.1357/Z+109.1142)/Z-23.79333)/Z+2.050931)/Z
230 LET Q1=((Q1-.1730503)/Z+.7034845)/Z-.064109E-3
```

```
232 LET Q2=(((-5.817517/Z+2.105874)/Z-.6896196)/Z+.4952024)/Z
234 LET Q2=(Q2-.187344E-2)/Z+.7979095
236 LET F2=(1-SQR(Z)*(Q2*CØS(Z-PI/4)-Q1*SIN(Z-PI/4)))/(X*X)
238 RETURN
240 IFZ>3THEN 250
242 LET Q1=(((2.1E-11*Z↑2-5.38E-9)*Z↑2+6.757E-7)*Z↑2-5.42443E-5)*Z↑2
244 LET Q1=((Q1+2.60415E-3)*Z↑2-6.25E-2)*Z↑2+.5
246 LET J1=Z*Q1
248 GØTØ 260
250 LET Q3=(((-.14604057/Z+.27617679)/Z-.20210391)/Z+4.61835E-5)/Z
252 LET Q3=((Q3+.14937)/Z+4.68E-6)/Z+.79788456
254 LET Q4=(((-.21262014/Z+.19397232)/Z+6.022188E-2)/Z-1.7222733E-1)/Z
256 LET Q4=((Q4+5.085E-4)/Z+.37498836)/Z-2.35619449+Z
258 LET J1=Q3*CØS(Q4)/SQR(Z)
260 RETURN
262 LET X4=EXP(-X1*Y)
264 LET X5=CØS(Y1*Y)
266 LET Y5=SIN(Y1*Y)
268 LET X6=EXP(-X*L)*(1-EXP(-X*T))
270 LET A2=X6*(A1+X4*((X-X1)*X5-Y1*Y5))
272 LET C2=X6*(C1-X4*((X-X1)*Y5+Y1*X5))
274 RETURN
276 END
```

Discussion of 2THRU

This program is designed to calculate the magnitude and phase of the voltage induced in a pickup coil with a rectangular cross section by the current in a driver coil with a rectangular cross section positioned on the opposite side of a two-layered conducting plate. The coils must be coaxial but may have different lengths and radii. The arrangement is shown in Fig. 9.

To use this program, one must first divide all dimensions by the mean radius of the driver coil. The results will, of course, be dimensionless and will be referred to as being "normalized." The product of the angular frequency of the driving current, the permeability, the conductivity, and the square of the mean radius of the driver coil must be calculated for both layers of the conducting plate. Let this product be denoted by $\omega\mu_1\sigma_1\bar{r}^2$ for the upper conductor and by $\omega\mu_2\sigma_2\bar{r}^2$ for the lower conductor.

Once these calculations have been made one need only type the following lines into the program. (Note: Parentheses are not typed.)

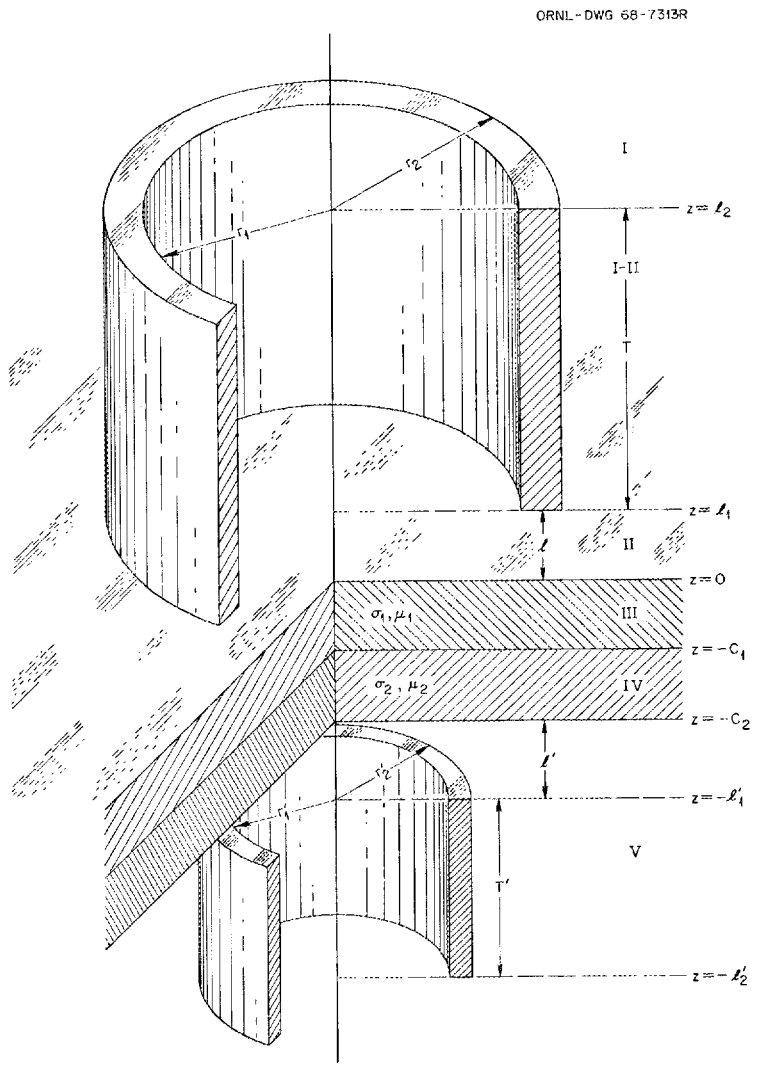

Fig. 9. Through-Transmission Coil Arrangement for a Two-Conductor Plate.

20 LET R1 = (numerical value of normalized inner radius of driver coil)

30 LET R2 = (numerical value of normalized outer radius of driver coil)

40 LET R3 = (numerical value of normalized inner radius of pickup coil)

50 LET R4 = (numerical value of normalized outer radius of pickup coil)

60 LET L = (normalized lift-off of driver coil plus normalized lift-off of pickup coil)

70 LET L2 = (normalized length of driver coil)

80 LET L4 = (normalized length of pickup coil)

90 LET M2 = (numerical value of $\omega\mu_1\sigma_1\overline{r}^2$)

Note: If the conductivity of the upper conductor is zero, one must type two additional lines:

440 LET X1 = X

450 LET Y1 = 0

100 LET U1 = (numerical value of relative permeability of upper conductor)

110 LET M2 = (numerical value of $\omega\mu_2\sigma_2\overline{r}^2$)

Note: If the conductivity of the lower conductor is zero, one must type two additional lines:

460 LET X2 = X

470 LET Y2 = 0

120 LET U2 = (numerical value of relative permeability of lower conductor)

130 LET C1 = (numerical value of normalized thickness of upper conductor)

140 LET C2 = (numerical value of normalized thickness of upper conductor plus normalized thickness of lower conductor)

The program may now be run.

The print-out by the computer will have the following format:

```
R1 = (R1)        R2 = (R2)        R3 = (R3)        R4 = (R4)
L2 = (L2)        L4 = (L4)        LIFTOFF = (L)
CLAD THICKNESS = (C1)             TOTAL THICKNESS = (C2)
M1 = (M1)        M2 = (M2)        U1 = (U1)        U2 = (U2)
X                REAL OF PICKUP   IMAG OF PICKUP
1.                  ------           ------
2.                  ------           ------
3.                  ------           ------
4.                  ------           ------
5.                  ------           ------
10.                 ------           ------
15.                 ------           ------
25.                 ------           ------
35.                 ------           ------
MAGNITUDE IS ------                  PHASE IS ------
VOLTAGE/FINN'R(BAR) = ------
```

The various symbols enclosed in parentheses are used here to indicate that the numerical value of the symbol will be printed. The first column, headed "X," is the upper limit of the integration being performed by the computer. The other two columns are the real and imaginary parts of the integral. The next to the last line contains the magnitude and phase of the integral. The last line printed is the magnitude of the peak (or root mean square) induced voltage divided by the product of the frequency of the driving current, the magnitude of the peak (or root mean square) current, the number of turns on the driver coil, the number of turns on the pickup coil, and the mean radius of the driver coil in meters.

The example below is presented for additional aid to those who wish to use this program.

Sample Calculation of 2THRU

Suppose that we wish to know the voltage induced in a pickup coil 0.025 in. long with inner and outer radii of 0.4875 and 0.5125 in., respectively, by the current in a driver coil positioned on the opposite side of a 0.250-in.-thick copper plate on which 0.010 in. of aluminum has been clad. The driver is taken to be 0.800 in. long with inner and outer radii of 0.100 and 0.900 in., respectively. The frequency of the driving current is 1.25 kHz, the lift-off of the driver coil 0.0125 in., and the lift-off of the pickup coil is 0.0125 in.

First, we determine the mean radius of the driver coil to be 0.500 in., so that

Normalized inner radius of driver coil = 0.100/0.500 = 0.2
Normalized outer radius of driver coil = 0.900/0.500 = 1.8
Normalized inner radius of pickup coil = 0.4875/0.500 = 0.0975
Normalized outer radius of pickup coil = 0.5125/0.500 = 1.025
Normalized lift-off of driver coil = 0.0125/0.500 = 0.025
Normalized lift-off of pickup coil = 0.0125/0.500 = 0.025
Normalized length of driver coil = 0.800/0.500 = 1.6
Normalized length of pickup coil = 0.025/0.500 = 0.05
Normalized thickness of upper conductor = 0.010/0.500 = 0.02

Normalized thickness of lower conductor plus upper conductor = (0.010 + 0.250)/0.500 = 0.52

Furthermore,

Angular frequency of driving current = $2\pi \times 1250\ \text{sec}^{-1}$

Permeability of both conductors = $4\pi \times 10^{-7}$ mhos/m

Conductivity of copper = 5.77×10^{7} mhos/m

Thus,

$$\omega\mu_1\sigma_1\bar{r}^2 = 45.48$$
$$\omega\mu_2\sigma_2\bar{r}^2 = 91.91$$

This information is now typed into the program in the following format:

```
20 LET R1 = 0.2
30 LET R2 = 1.8
40 LET R3 = 0.0975
50 LET R4 = 1.025
60 LET L = 0.05
70 LET L2 = 1.6
80 LET L4 = 0.05
90 LET M1 = 45.48
100 LET U1 = 1
110 LET M2 = 91.91
120 LET U2 = 1
130 LET C1 = 0.02
140 LET C2 = 0.52
```

The program is now run with the following results:

```
R1 = .2          R2 = 1.6     R3 = .0975     R4 = 1.025
L2 = 1.6         L4 = .05     LIFTOFF = .05
CLAD THICKNESS = .02                    TOTAL THICKNESS = .52
M1 = 45.48   M2 = 91.91   U1 = 1   U2 = 1
X                  REAL OF PICKUP     IMAG OF PICKUP
1.                   -1.76069E-6        2.6493E-6
2.                   -1.08048E-5        1.28964E-5
3.                   -1.76595E-5        1.84124E-5
4.                   -1.8379E-5         1.88304E-5
5.                   -1.81475E-5        1.87708E-5
10.                  -1.8125E-5         1.87782E-5
15.                  -1.81257E-5        1.87771E-5
25.                  -1.81257E-5        1.87771E-5
35.                  -1.81257E-5        1.87771E-5
MAGNITUDE IS 2.60983E-5                 PHASE IS -3.90934
VOLTAGE/FINN'R(BAR) = 2.49275E-8
```

from which we see that the phase of the induced voltage is −3.90934. The actual magnitude of the induced voltage is obtained by multiplying the last line by the frequency of the driving current (1250), the magnitude of the current, the number of turns on the driver coil, the number of turns on the pickup coil, and the mean radius of the driver coil in meters.

2THRU Program

```
10 REM        2THRU          VERSIØN        10/16/69
20 LET R1=0.2
30 LET R2=1.6
40 LET R3=0.0975
50 LET R4=1.025
60 LET L=0.05
70 LET L2=1.6
80 LET L4=.05
90 LET M1=91.91
100 LET U1=1
110 LET M2=91.91
120 LET U2=1
130 LET C1=0.25
140 LET C2=0.5
150 PRINT "R1=";R1,"R2=";R2,"R3=";R3,"R4=";R4
160 PRINT"L2=";L2,"L4=";L4,"LIFTØFF=";L
170 PRINT "CLAD THICKNESS=";C1, "TØTAL THICKNESS=";C2
180 PRINT "M1=";M1; "M2=";M2; "U1=";U1; "U2=";U2
190 PRINT"X","REAL ØF PICKUP","IMAG ØF PICKUP"
200 LET S1=1E-2
210 LET S2=1
220 LET I6=0
230 LET I8=0
240 LET B1=0
250 LET B2 =S2
260 FØR X=B1+(S1)/2 TØ B2 STEP S1
270 LET Z=R2*X
280 LET Q1=R2
290 GØSUB 1050
300 LET I2=F2
310 LET Z=R1*X
320 LET Q1=R1
330 GØSUB 1050
340 LET I1=F2
350 LET Z=R4*X
360 LET Q1=R4
370 GØSUB 1050
380 LET J2=F2
390 LET Z=R3*X
400 LET Q1=R3
410 GØSUB 1050
420 LET J1=F2
430 LET S3=X*S1*(I2-I1)*(J2-J1)
```

```
440 LET X1=.707107*SQR(SQR(X*X*X*X+M1*M1)+X*X)/U1
450 LET Y1=.707107*(SQR(SQR(X*X*X*X+M1*M1)-X*X))/U1
460 LET X2=.707107*(SQR(SQR(X*X*X*X+M2*M2)+X*X))/U2
470 LET Y2=.707107*(SQR(SQR(X*X*X*X+M2*M2)-X*X))/U2
480 LET B8=X1*X2-Y1*Y2
490 LET C8=X1*Y2+Y1*X2
500 LET F3=2*CØS(Y1*C1*U1)
510 LET F4=2*SIN(Y1*C1*U1)
520 LET F5=CØS(Y2*(C2-C1)*U2)
530 LET F6=SIN(Y2*(C2-C1)*U2)
540 LET A7=(B8*F3-C8*F4)*F5-(B8*F4+C8*F3)*F6
550 LET D7=(B8*F3-C8*F4)*F6+(B8*F4+C8*F3)*F5
560 LET X4=EXP(2*X1*C1*U1)
570 LET Y4=CØS(2*Y1*C1*U1)
580 LET Y5=SIN(2*Y1*C1*U1)
590 LET A1=(X-X1)*(X1+X2)+Y1*(Y1+Y2)
600 LET A2=(X-X1)*(Y1+Y2)-Y1*(X1+X2)
610 LET D1=(X+X1)*(X1-X2)-Y1*(Y1-Y2)
620 LET D2=(X+X1)*(Y1-Y2)+Y1*(X1-X2)
630 LET A3=(X-X1)*(X1-X2)+Y1*(Y1-Y2)
640 LET D3=(X-X1)*(Y1-Y2)-Y1*(X1-X2)
650 LET A4=(X+X1)*(X1+X2)-Y1*(Y1+Y2)
660 LET D4=(X+X1)*(Y1+Y2)+Y1*(X1+X2)
670 LET C5=A3+(A4*Y4-D4*Y5)*X4
680 LET D5=D3+(D4*Y4+A4*Y5)*X4
690 LET X5=EXP(2*X2*(C2-C1)*U2)
700 LET Y6=CØS(2*Y2*(C2-C1)*U2)
710 LET Y7=SIN(2*Y2*(C2-C1)*U2)
720 LET G1=X+X2
730 LET G2=X2-X
740 LET G7=G1*C5-Y2*D5
750 LET G8=G1*D5+Y2*C5
760 LET B6=D1*Y4-D2*Y5
770 LET C6=D1*Y5+D2*Y4
780 LET A8=X5*(G7*Y6-G8*Y7)+G2*(A1+X4*B6)-Y2*(A2+X4*C6)
790 LET D8=X5*(G7*Y7+G8*Y6)+G2*(A2+X4*C6)+Y2*(A1+X4*B6)
800 LET K1=(A7*A8+D7*D8)/(A8*A8+D8*D8)
810 LET K2=(A8*D7-A7*D8)/(A8*A8+D8*D8)
820 LET G=(1-EXP(-X*L2))*(1-EXP(-X*L4))*EXP(-L*X+X1*C1+X2*(C2-C1))
830 LET I6=I6+S3*K1*G
840 LET I8=I8+S3*K2*G
850 NEXT X
860 LET B1=B2
870 LETB2=B2+S2
880 PRINT X+S1/2,I6,I8
890 IF X<3.5 THEN 260
900 LET S1=5E-2
910 LET S2=5
920 IF X<9 THEN 260
930 LET S2=10
940 LET S1=.1
950 IF X<25 THEN 260
960 LETQ1=SQR(I6*I6+I8*I8)
970 LET Q2=ATN(-I6/I8)
980 IF I8<0 THEN 1000
990 LET Q2=Q2+PI
1000 PRINT"MAGNITUDE IS";Q1,"PHASE IS";-Q2
```

```
1010 PRINT "          VØLTAGE/FINN'R(BAR)=";
1020 PRINT 9.92201E-5*Q1/((R4-R3)*(R2-R1)*L2*L4)
1030 PRINT
1040 GØ TØ 1200
1050 IFZ>5 THEN 1140
1060 LET L9=INT(2*Z)+3
1070 LET F1=.5*Q1*Q1*Q1
1080 LET F2=F1/3
1090 FØR N=1TØL9
1100 LETF1=-F1*.250*Z*Z/(N*N+N)
1110 LETF2=F2+F1/(2*N+3)
1120 NEXTN
1130 GØTØ 1190
1140 LET Q1=(((-188.1357/Z+109.1142)/Z-23.79333)/Z+2.050931)/Z
1150 LET Q1=((Q1-.1730503)/Z+.7034845)/Z-.064109E-3
1160 LET Q2=(((-5.817517/Z+2.105874)/Z-.6896196)/Z+.4952024)/Z
1170 LET Q2=(Q2-.187344E-2)/Z+.7979095
1180 LET F2=(1-SQR(Z)*(Q2*CØS(Z-PI/4)-Q1*SIN(Z-PI/4)))/(X*X*X)
1190 RETURN
1200 END
```

COIL BETWEEN TWO CONDUCTING PLANES

A coil between two conducting planes, shown in Fig. 10, is normally used to measure the spacing between the two planes.[11] The program (BTNCO) in this section calculates the normalized coil impedance as a function of the various coil and conductor variables, including the spacing between the planes.

Discussion of BTNCO

This program is designed to calculate the normalized impedance of a coil of rectangular cross section between two conducting plates of effectively infinite thicknesses (at least four coil diameters or skin depths, whichever is smaller) (see Fig. 10). The plates may have different permeabilities and electrical conductivities.

To use this program, one must divide all dimensions by the mean radius of the coil. The results will, of course, be dimensionless and will be referred to as being "normalized." The product of the angular frequency of the driving current, the permeability, the conductivity, and the square of the mean radius of the coil must be calculated for each

[11] C. V. Dodd, Microtecnic 18(5,6), 1-7 (1964).

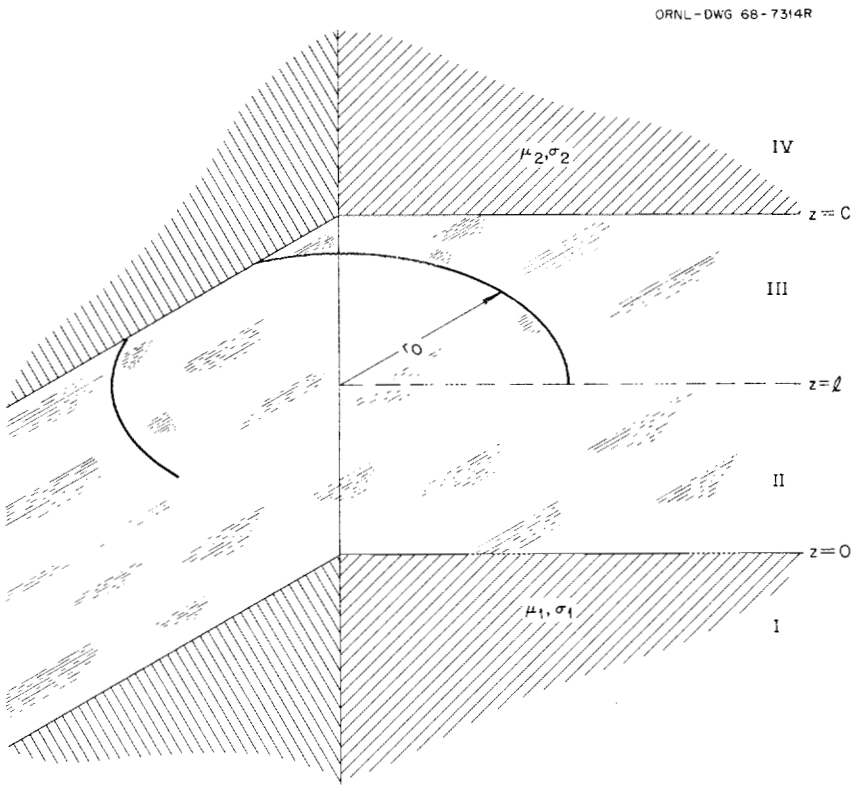

Fig. 10. A Coil of Rectangular Cross Section Between Two Conducting Plates.

conductor. Let this product be denoted by $\omega\mu_1\sigma_1\overline{r}^2$ for the upper plate and by $\omega\mu_2\sigma_2\overline{r}^2$ for the lower one.

Once these calculations have been made, one need only type the following lines into the program. (Note: Parentheses are not typed.)

20 LET R1 = (numerical value of normalized inner coil radius)

30 LET R2 = (numerical value of normalized outer coil radius)

40 LET L1 = (numerical value of normalized lift-off from lower conductor)

50 LET L2 = (numerical value of normalized lift-off from lower conductor plus normalized coil length)

60 LET M1 = (numerical value of $\omega\mu_1\sigma_1\overline{r}^2$)

Note: If the conductivity of the upper plate is zero, one must type two additional lines:

320 LET X1 = X

330 LET Y1 = 0

70 LET U1 = (numerical value of relative permeability of upper conductor)

80 LET M2 = (numerical value of $\omega\mu_2\sigma_2\bar{r}^2$)

Note: If the conductivity of the lower plate is zero, one must type two additional lines:

340 LET X2 = X

350 LET Y2 = 0

90 LET U2 = (numerical value of relative permeability of lower conductor)

100 LET C = (numerical value of normalized separation of conductors)

The program may now be run.

The print-out by the computer will have the following format:

```
R1 = (R1)        R2 = (R2)        L1 = (L1)        L2 = (L2)
M1 = (M1)        U1 = (U1)        M2 = (M2)        U2 = (U2)
                     CONDUCTOR SEPARATION IS (C)
X                AIR VALUE        REAL PART        IMAG PART
5                  ------           ------           ------
10                 ------           ------           ------
15                 ------           ------           ------
20                 ------           ------           ------
40                 ------           ------           ------
NORMALIZED IMAG PART ------       NORMALIZED REAL PART ------
```

The various symbols enclosed in parentheses are used here to indicate that the numerical value of the symbol will be printed. The first column, headed "X," is the upper limit of the integration being performed by the computer. The second column, headed "AIR VALUE," is the value of the integral in the absence of the two conductors, while the remaining two columns are the real and imaginary parts of the integral in the presence of the conductors. These appear chiefly to allow one to inspect the convergence of the integration. The last line is the normalized impedance of the coil in the presence of the conductors.

The example below is presented for additional aid to those who wish to use the program.

Sample Calculation of BTNCO

Let us suppose that we wish to know the normalized impedance of a coil of rectangular cross section 0.100 in. long with inner and outer radii of 0.125 and 0.375 in., respectively, positioned between two conducting plates which are separated by a distance of 0.125 in. The upper conductor is assumed to be copper, while the lower is assumed to be aluminum. The bottom of the coil is taken to be 0.005 in. from the aluminum conductor, and the frequency of the driving current to be 5 kHz.

First, we determine the mean coil radius to be 0.250 in., so that

Normalized inner coil radius = 0.125/0.250 = 0.5
Normalized outer coil radius = 0.375/0.250 = 1.5
Normalized lift-off = 0.005/0.250 = 0.02
Normalized coil length = 0.100/0.250 = 0.4
Normalized separation of conductors = 0.125/0.250 = 0.5

Furthermore,

Angular frequency of driving current = $2\pi \times 5000$ sec^{-1}
Permeability of both conductors = $4\pi \times 10^{-7}$ h/m
Relative permeability of both conductors = 1
Conductivity of copper = 5.77×10^{7} mhos/m
Conductivity of aluminum = 2.86×10^{7} mhos/m

Thus,

$$\omega\mu_1\sigma_1\bar{r}^2 = 91.91$$
$$\omega\mu_2\sigma_2\bar{r}^2 = 45.48$$

This information is now typed into the program using the following format:

```
20 LET R1 = 0.5
30 LET R2 = 1.5
40 LET L1 = 0.02
50 LET L2 = 0.42
60 LET M1 = 91.91
70 LET U1 = 1
80 LET M2 = 45.48
```

```
90 LET U2 = 1
100 LET C = 0.5
```

The program is now run with the following results:

R1 = 0.5	R2 = 1.5	L1 = 0.2E-01	L2 = 0.42
M1 = 91.91	U1 = 1	M2 = 45.48	U2 = 1

CONDUCTOR SEPARATION IS 0.5

X	AIR VALUE	REAL PART	IMAG PART
5	0.06617157	0.2512494E-01	-0.0852233E-01
10	0.0557785	0.2569981E-01	-0.0856341E-01
15	0.06684212	0.2577326E-01	-0.0856415E-01
20	0.06687971	0.2580084E-01	-0.0856423E-01
40	0.06689865	0.2581979E-01	-0.0856424E-01

NORMALIZED IMAG PART 0.38595379 NORMALIZED REAL PART 0.12801815

From this, we see that the normalized impedance is $Z_n = 0.12801815 + j\ 0.38595379$.

BTNCO Program

```
10 REM          BTNCØ          VERSIØN        07/08/68
20 LET R1=.8333
30 LET R2=1.1667
40 LET L1=.0476
50 LET L2=.3809
60 LET M1=77.05
70 LET U1=1
80 LET M2=40
90 LET U2=1
100 LET C=.5
110 PRINT "R1=";R1,"R2=";R2,"L1=";L1,"L2=";L2
120PRINT"M1=";M1,"U1=";U1,"M2=";M2,"U2=";U2
130 PRINT" ","CØNDUCTØR SEPARATIØN IS";C
140 PRINT "X", "AIR VALUE", "REAL PART", "IMAG PART"
150 LET S1=1E-2
160 LET S2=5
170 LET I6=0
180 LET I7=0
190 LET I8=0
200 LET B1=0
210 LET B2 =S2
220 FØR X = B1 +S1/2 TØ B2 STEP S1
230 LET Z=R2*X
240 LET Q1=R2
250 GØSUB 720
260 LET I2=F2
270 LET Z=R1*X
280 LET Q1=R1
290 GØSUB 720
300 LET I1=F2
310 LET S3=S1*(I2-I1)↑2/X
320 LET X1=.707107*(SQR(SQR(X*X*X*X+M1*M1)+X*X))/U1
330 LET Y1=.707107*(SQR(SQR(X*X*X*X+M1*M1)-X*X))/U1
```

```
340 LET X2=.707107*(SQR(SQR(X*X*X*X+M2*M2)+X*X))/U2
350 LET Y2=.707107*(SQR(SQR(X*X*X*X+M2*M2)-X*X))/U2
360 LET Y=X
370 GØ SUB 600
380 LET K3=K1
390 LET K4=K2
400 LET Y=-X
410 GØ SUB 600
420 LET K5=K1+K3
430 LET K6=K2+K4
440 LET I6=I6+2*S3*((L2-L1)+(EXP(-X*(L2-L1))-1)/X)
450 LET I7=I7+S3*(2*(L2-L1)+K5)
460 LET I8=I8+S3*K6
470 NEXT X
480 LETB1=B2
490 LET B2=B2+S2
500 LET Q3=X+S1/2
510 PRINT Q3,I6,I7,I8
520 IF X < 3 THEN 220
530 LET S1=5E-2
540 IF X<10 THEN 220
550 LET S1=.1
560LETS2=20
570 IF X<35 THEN 220
580 PRINT "NØRMALIZED IMAG PART";I7/I6,"NØRMALIZED REAL PART";-I8/I6
590 GØTØ 870
600 LET G1=2*(EXP(-Y*(L2-L1))-1)
610 LET G2=(EXP(-Y*L2)-EXP(-Y*L1))↑2
620 LET A1=G1*(Y+X2)+G2*(Y-X2)
630 LET C1=(Y+X1)*A1-Y1*Y2*(G1-G2)
640 LET C2=Y2*(Y+X1)*(G1-G2)+Y1*A1
650 LET A2=(Y+X1)*(Y+X2)-Y1*Y2
660 LET A3=(Y+X1)*Y2+(Y+X2)*Y1
670 LET C5=A2*Y-Y*((Y-X1)*(Y-X2)-Y1*Y2)*EXP(-2*Y*C)
680 LET D5=A3*Y+Y*((Y-X1)*Y2+Y1*(Y-X2))*EXP(-2*Y*C)
690 LET K1=(C1*C5+C2*D5)/(C5*C5+D5*D5)
700 LET K2=(C2*C5-C1*D5)/(C5*C5+D5*D5)
710 RETURN
720 IF Z>5 THEN810
730 LETL5=INT(2*Z)+3
740 LETF1=.5*Q1*Q1*Z
750 LET F2=F1/3
760 FØRN=1TØL5
770 LETF1=-F1*.250*Z*Z/(N*N+N)
780 LETF2=F2+F1/(2*N+3)
790 NEXTN
800 GØTØ 860
810 LET Q1=(((-188.1357/Z+109.1142)/Z-23.79333)/Z+2.050931)/Z
820 LET Q1=((Q1-.1730503)/Z+.7034845)/Z-.064109E-3
830 LET Q2=(((-5.817517/Z+2.105874)/Z-.6896196)/Z+.4952024)/Z
840 LET Q2=(Q2-.187344E-2)/Z+.7979095
850 LET F2=(1-SQR(Z)*(Q2*CØS(Z-PI/4)-Q1*SIN(Z-PI/4)))/(X*X)
860 RETURN
870 END
```

COIL ENCIRCLING A TWO-CONDUCTOR ROD

The case of a coil encircling a two-conductor rod, shown in Fig. 11, is typical of many eddy-current tests. If we let the inner conductor have zero conductivity, this general case reduces to the case of a coil encircling a tube. This type of coil is used with impedance bridge instruments.

In this section, we have programs that calculate the normalized coil impedance (ENCCO), the defect sensitivity factor for a defect in

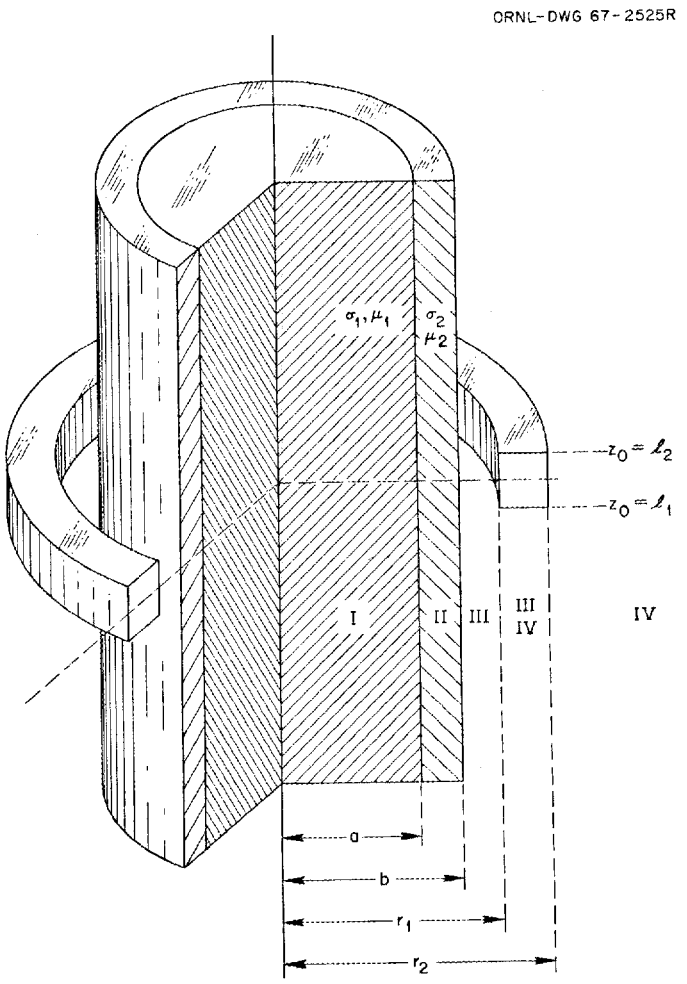

Fig. 11. A Coil of Rectangular Cross Section Encircling a Two-Conductor Rod.

the outer material (ENDFT), the defect sensitivity factor for a defect located at any point in a lattice in the outer material (ENDFTL), the defect sensitivity factor for a differential coil system and a defect located at any point in a lattice (READIN), and the defect sensitivity factor for a defect in the base material (ENDFB).

Normalized Coil Impedance

Discussion of ENCCO

This program is designed to calculate the normalized impedance of a coil with rectangular cross section coaxial with and encircling a two-conductor rod of effectively infinite (three or four coil diameters) length (see Fig. 11). The conductors may have different permeabilities and electrical conductivities.

To use this program, one must first divide all dimensions by the mean radius of the coil. The results will, of course, be dimensionless and will be referred to as being "normalized." The product of the angular frequency of the driving current, the permeability, the conductivity, and the square of the mean radius of the coil must be calculated for each conductor. Let this product be denoted by $\omega\mu_1\sigma_1\bar{r}^2$ for the inner conductor and by $\omega\mu_2\sigma_2\bar{r}^2$ for the outer one.

Once these calculations have been made, one need only type the following lines into the program. (Note: Parentheses are not typed.)

```
12 LET R1 = (numerical value of normalized inner coil radius)
14 LET R2 = (numerical value of normalized outer coil radius)
16 LET L1 = (numerical value of normalized distance between bottom
            of coil and z = 0 plane)
18 LET L2 = (numerical value of normalized distance between top of
            coil and z = 0 plane)
20 LET M1 = (numerical value of ωμ1σ1r̄²)
```

Note: If the conductivity of the inner conductor is zero, one must type two additional lines.

```
60 LET X1 = X
62 LET Y1 = 0
```

22 LET U1 = (numerical value of relative permeability of inner conductor)

24 LET M2 = (numerical value of $\omega\mu_2\sigma_2\bar{r}^2$)

Note: If the conductivity of the outer conductor is zero, one must type two additional lines.

56 LET X2 = X

58 LET Y2 = 0

26 LET U2 = (numerical value of relative permeability of outer conductor)

28 LET A = (numerical value of normalized radius of inner conductor)

30 LET B = (numerical value of normalized radius of outer conductor)

32 LET A9 = (normalization factor)

Note: This value may be obtained with the aid of AIRCO simply by placing the appropriate coil dimensions in that program.

The program may now be run.

The print-out by the computer will have the following format:

```
R1 = (R1)        R2 = (R2)        L1 = (L1)        L2 = (L2)
INN RAD = (A)    OUT RAD = (B)    AIR VALUE = (A9)
M1 = (M1)        U1 = (U1)        M2 = (M2)        U2 = (U2)
X                AIR VALUE        REAL PART        IMAG PART
1                ------           ------           ------
2                ------           ------           ------
3                ------           ------           ------
4                ------           ------           ------
5                ------           ------           ------
6                ------           ------           ------
7                ------           ------           ------
8                ------           ------           ------
9                ------           ------           ------
10               ------           ------           ------
11               ------           ------           ------
12               ------           ------           ------
13               ------           ------           ------
14               ------           ------           ------
15               ------           ------           ------
16               ------           ------           ------
NORMALIZED IMAG PART ------       NORMALIZED REAL PART ------
```

The various symbols enclosed in parentheses are used here to indicate that the numerical value of the symbol will be printed. The first

column, headed "X," is the upper limit of the integration being performed by the computer. The second column, headed "AIR VALUE," is the value of the integral in the absence of the two-conductor rod, while the remaining two columns are the real and imaginary parts of the integral in the presence of the conductors. These appear chiefly to allow one to inspect the convergence of the integration. The last line is the normalized impedance of the coil in the presence of the two-conductor rod.

The example below is presented for additional aid to those who wish to use the program.

Sample Calculation of ENCCO

Let us suppose that we wish to know the normalized impedance of a coil 0.155 in. long with inner and outer radii 0.420 and 0.580 in., respectively, due to the presence of a coaxial two-conductor rod of effectively infinite (three or four coil diameters) length. The inner conductor is assumed to be aluminum with a radius of 0.300 in., while the outer conductor is assumed to be copper with a radius of 0.400 in. We shall assume the frequency of the driving current to be 1.25 kHz and the distance of the bottom of the coil from the $z = 0$ plane to be 0.005 in.

First, we determine the mean coil radius to be 0.500 in., so that

Normalized inner coil radius = 0.420/0.500 = 0.84
Normalized outer coil radius = 0.580/0.500 = 1.16
Normalized distance from bottom of coil to $z = 0$ plane = 0.01
Normalized distance from top of coil to $z = 0$ plane = 0.32
Normalized radius of inner conductor = 0.300/0.500 = 0.6
Normalized radius of outer conductor = 0.400/0.500 = 0.8

Furthermore,

Angular frequency of driving current = $2\pi \times 1250$ sec^{-1}
Permeability of both conductors = $4\pi \times 10^{-7}$ h/m
Relative permeability of both conductors = 1
Conductivity of copper = 5.77×10^{7} mhos/m
Conductivity of aluminum = 2.86×10^{7} mhos/m

Thus,

$$\omega\mu_1\sigma_1\overline{r}^2 = 45.48$$
$$\omega\mu_2\sigma_2\overline{r}^2 = 91.91$$

At this point one determines the normalization factor by placing the normalized coil dimensions in AIRCO and running that program. It is worth noting that the normalization factor is independent of all parameters except the coil dimensions. This factor is normalization factor 2 in the print-out of AIRCO and for the case in point is found to be 0.01011632. With the normalization factor in hand, the remaining procedure is quite simple.

The above information is now typed into the program as follows:

```
12 LET R1 = 0.84
14 LET R2 = 1.16
16 LET L1 = 0.01
18 LET L2 = 0.32
20 LET M1 = 45.48
22 LET U1 = 1
24 LET M2 = 91.91
26 LET U2 = 1
28 LET A = 0.6
30 LET B = 0.8
32 LET A9 = 0.1011632E-1
```

Execution of the program yields the following results:

```
R1 = .84          R2 = 1.16          L1 = .01          L2 = .32
INN RAD = .6   OUT RAD = .8   AIR VALUE = 1.01163E-2
M1 = 45.48        U1 = 1             M2 = 91.91        U2 = 1
X                 AIR VALUE          REAL PART         IMAG PART
1.                1.04034E-3         -9.65715E-4       -4.48224E-4
2.                4.91629E-3          2.00179E-3       -7.28955E-4
3.                7.69354E-3          4.40082E-3       -8.92772E-4
4.                8.02258E-3          4.57181E-3       -9.85552E-4
5.                8.49571E-3          4.97829E-3       -1.03686E-3
6.                9.28378E-3          5.73816E-3       -1.06459E-3
7.                9.45269E-3          5.89514E-3       -1.07929E-3
8.                9.56387E-3          6.00128E-3       -1.08694E-3
9.                9.83788E-3          6.27314E-3       -1.09088E-3
10.               9.91996E-3          6.35432E-3       -1.09288E-3
11.               9.94553E-3          6.37951E-3       -1.0939E-3
12.               1.00317E-2          6.4655E-3        -1.0944E-3
13.               1.00638E-2          6.49755E-3       -1.09465E-3
14.               1.00687E-2          6.50242E-3       -1.09477E-3
15.               1.00888E-2          6.5225E-3        -1.09482E-3
16.               1.00968E-2          6.53046E-3       -1.09484E-3
NORMALIZED IMAG PART  .64747   NORMALIZED REAL PART  .108226
```

From this we see that the normalized impedance is $Z_n = 0.108226 + j\ 0.64747$.

ENCCO Program

```
10 REM              ENCCØ            VERSIØN     10/19/70
12 LET R1=0.84
14 LET R2=1.16
16 L1=0.01
18 L2=0.32
20 M1=45.48
22 U1=1
24 M2=91.91
26 U2=1
28 A=0.6
30 B=0.8
32 A9=0.1011632E-1
34PRINT"R1=";R1,"R2=";R2,"L1=";L1,"L2=";L2
36PRINT "INN RAD=";A;"ØUT RAD=";B;"AIR VALUE=";A9
38PRINT"M1=";M1,"U1=";U1,"M2=";M2,"U2=";U2
40 PRINT "X","AIR VALUE","REAL PART","IMAG PART"
42 LET M7=0
44 LET M8=0
46 LETM9=0
48 LETS1=1E-2
50 LETS2=1
52 LET B1=0
54 LET B2 =S2
56 FØR X = B1 +S1/2 TØ B2 STEP S1
```

```
58 LET X2 = .707107*SQR(SQR(X*X*X*X+M2*M2)+X*X)
60 LET Y2 = .707107*SQR(SQR(X*X*X*X+M2*M2)-X*X)
62 LET X1 = .707107*SQR(SQR(X*X*X*X+M1*M1)+X*X)
64 LET Y1 = .707107*SQR(SQR(X*X*X*X+M1*M1)-X*X)
66 LET Z1 = SQR(X1*X1+Y1*Y1)
68 LET Ø1 = ATN(Y1/X1)
70 LET Z2 = SQR(X2*X2+Y2*Y2)
72 LET  Ø2= ATN(Y2/X2)
74LETZ=A*Z1
76LETØ=Ø1
78GØSUB 318
80LETI1=Q1
82LETJ1=Q2
84LETI2=Q5
86LETJ2=Q6
88LETZ=A*Z2
90LETØ=Ø2
92GØSUB 318
94LETI3=Q1
96LETJ3=Q2
98LETK3=Q3
100LETN3=Q4
102LETI4=Q5
104LETJ4=Q6
106LETK4=Q7
108LETN4=Q8
110LETZ=X*B
112LETØ=0
114GØSUB 318
116 LET K5=Q3
118LETI6=Q5
120LETK6=Q7
122LETZ=B*Z2
124LETØ=Ø2
126GØSUB 318
128LETI7=Q1
130LETJ7=Q2
132LETK7=Q3
134LETN7=Q4
136LETI8=Q5
138LETJ8=Q6
140LETK8=Q7
142LETN8=Q8
144 LET Q1=-X*K5*K8*CØS(N8)+Z2*K7*K6*CØS(Ø2+N7)/U2
146 LET Q2=-X*K5*K8*SIN(N8)+Z2*K7*K6*SIN(Ø2+N7)/U2
148 LET D1 = SQR(Q1*Q1+Q2*Q2)
150GØSUB508
152LETE1=Q3
154LETQ1=Z1*I4*I1*CØS(Ø1+J4+J1)/U1-Z2*I2*I3*CØS(Ø2+J2+J3)/U2
156LETQ2=Z1*I4*I1*SIN(Ø1+J4+J1)/U1-Z2*I2*I3*SIN(Ø2+J2+J3)/U2
158 LET D2 = SQR(Q1*Q1+Q2*Q2)
160GØSUB508
```

```
162LETE2=Q3
164 LET Q1=Z1*K4*I1*CØS(Ø1+N4+J1)/U1+Z2*K3*I2*CØS(Ø2+N3+J2)/U2
166 LET Q2=Z1*K4*I1*SIN(Ø1+N4+J1)/U1+Z2*K3*I2*SIN(Ø2+N3+J2)/U2
168 LET D3 = SQR(Q1*Q1+Q2*Q2)
170GØSUB508
172LETE3=Q3
174 LET Q1=Z2*I7*K6*CØS(Ø2+J7)/U2+X*I8*K5*CØS(J8)
176 LET Q2=Z2*I7*K6*SIN(Ø2+J7)/U2+X*I8*K5*SIN(J8)
178 LET D4 = SQR(Q1*Q1+Q2*Q2)
180GØSUB508
182LETE4=Q3
184 LET Q1 = D1*D2*CØS(E1+E2)+D3*D4*CØS(E3+E4)
186 LET Q2 = D1*D2*SIN(E1+E2)+D3*D4*SIN(E3+E4)
188 LET D5 = SQR (Q1*Q1+Q2*Q2)
190GØSUB508
192LETE5=Q3
194LETG1=(I8*D3*CØS(J8+E3-E5)-K8*D2*CØS(N8+E2-E5))/(B*K6*D5)
196LETG1=G1-I6/K6
198LETG2=(I8*D3*SIN(J8+E3-E5)-K8*D2*SIN(N8+E2-E5))/(B*K6*D5)
200 LET Z = R2*X
202 LET Q1 = R2
204GØSUB 250
206 LET Q7 = K7
208LETI2=F8
210 LET Z = R1*X
212 LET Q1 = R1
214GØSUB 250
216 LET Q8 = K7
218LETI1=F8
220 LET S5=4*S1*((Q7-Q8)*SIN(X*(L2-L1)/2))↑2
222 LET S3=3.141593*X*S1*(I2-I1)↑2
224 LET A3 = S3*((EXP(-X*(L2-L1))-1)/X+L2-L1)
226 LET M7=M7+A3+G1*S5
228 LET M8=M8+G2*S5
230LETM9=M9+A3
232 NEXT X
234 PRINT X+S1/2,M9,M7,M8
236 LET S1=5E-2
238 LETB1=B1+S2
240 LETB2=B2+S2
242 IFX<15.5 THEN 56
244PRINT"NØRMALIZED IMAG PART";(A9-M9+M7)/A9,
246PRINT"NØRMALIZED REAL PART";-M8/A9
248GØTØ516
250 IF Z>5 THEN 298
252 LET L5=INT(20*(1-EXP(-Z/10))+4)
254 LETF1=0
256 LET F2=1
258LETF6=1
260LETT5=Q1*Q1*Q1
262 LETF8=T5/6
264 LET T6=1/2
```

```
266 LET K7 = Q1/(X*X)+(.577215665-1/2-1/3+LØG(Z/2))*T5/6
268 FØR R=1 TØ L5
270 LET F6=-1*F6
272 LET F1=F1+1/R
274 LET F2=F2+1/(R+1)
276 LET T5=T5*Z*Z
278 LETT6=T6/(4*R*(R+1))
280 LETC2=T6/(3+2*R)
282 LETF7=F6*T5*C2
284 LET C1=(.577215665-(F1+F2)/2-1/(3+2*R))*C2
286 LET F3=C1*T5+C2*LØG(Z/2)*T5
288 LET K7=K7+F3
290LETF8=F8+F7
292 NEXT R
294 LET K7=K7-3.1415927/(2*X*X*X)
296 GØ TØ 316
298 LET P1=(((-188.1357/Z+109.1142)/Z-23.79333)/Z+2.050931)/Z
300 LET P1=((P1-.1730503)/Z+.7034845)/Z-.064109E-3
302 LET P2=(((-5.817517/Z+2.105874)/Z-.6896196)/Z+.4952024)/Z
304 LET P2=(P2-.187344E-2)/Z+.7979095
306 LET P4=3.1415927
308 LET F8=(1-SQR(Z)*(P2*CØS(Z-P4/4)-P1*SIN(Z-P4/4)))/(X*X*X)
310 LET P3=(((.7989839/Z-1.1768576)/Z+.91571421)/Z-.67491295)/Z
312 LET P3=(P3+1.0958276)/Z+1.2533263
314 LET K7=-P3*SQR(Z)*EXP(-Z)/(X*X*X)
316 RETURN
318 IFZ>8THEN392
320 LETL5=20*(1-EXP(-Z/10))+4
322 LET T1=1
324 LETT5=Z/2
326 LETV1=T1
328 LETV2=0
330 V3=0
332 V4=0
334 LETV5=T5*CØS(Ø)
336 LETV6=T5*SIN(Ø)
338 LETV7=V5
340 LETV8=V6
342 LETF1=0
344 LETF2=1
346 FØR R=1 TØ L5
348 LET Z3=CØS(2*R*Ø)
350 LET Z4=SIN(2*R*Ø)
352 LET Z5=CØS((2*R+1)*Ø)
354 LET Z6=SIN((2*R+1)*Ø)
356 LETF1=F1+1/R
358 LETF2=F2+1/(R+1)
360 LET T1=T1*Z*Z/(4*R*R)
362 LET T5=T5*Z*Z/(4*R*(R+1))
364 LET V1=V1+T1*Z3
366 LET V2=V2+T1*Z4
368 LET V3=V3+T1*Z3*F1
```

```
370 LET V4=V4+T1*Z4*F1
372 LET V5=V5+T5*Z5
374 LET V7=V7+T5*(F1+F2)*Z5
376 LET V6=V6+T5*Z6
378 LET V8 =V8+T5*(F1+F2)*Z6
380 NEXTR
382 LET V3=V3-(0.577215665+LØG(Z/2))*V1+Ø*V2
384 LET V4=V4-(0.577215665+LØG(Z/2))*V2-Ø*V1
386 LETV7=-V7/2+CØS(Ø)/Z+(.577215665+LØG(Z/2))*V5-Ø*V6
388 LETV8=-V8/2-SIN(Ø)/Z+(.577215665+LØG(Z/2))*V6+Ø*V5
390 GØTØ474
392 LETF1=1
394 LETW7=1
396 LETW5=1
398 LET W3=1
400 LET W1=1
402 LETT2=1
404 LETT1=1
406 LET W2=0
408 LETW4=0
410 LETW6=0
412 LETW8=0
414 L5=3+20/Z
416 FØRR=1TØL5
418 LETF1=-F1
420 LET T2 =T2*(4-(2*R-1)*(2*R-1))/(8*R*Z)
422 LET T1=T1*(-(2*R-1)↑2)/(8*R*Z)
424 LET Z3=CØS(R*Ø)
426 LET Z4=SIN(R*Ø)
428 LET W1=W1+F1*T1*Z3
430 LET W2=W2-F1*T1*Z4
432 LET W3=W3+T1*Z3
434 LET W4=W4-T1*Z4
436 LET W5=W5+F1*T2*Z3
438 LET W6=W6-F1*T2*Z4
440 LET W7 =W7+T2*Z3
442 LET W8=W8-T2*Z4
444 NEXT R
446 LET Q9=.3989422804*EXP(Z*CØS(Ø))/SQR(Z)
448 LET Q5=Q9*(CØS(Z*SIN(Ø)-.5*Ø))
450 LET Q6=Q9*(SIN(Z*SIN(Ø)-.5*Ø))
452 LET Q9=1.253314137*EXP(-Z*CØS(Ø))/SQR(Z)
454 LET Q7=Q9*(CØS(-Z*SIN(Ø)-.5*Ø))
456 LET Q8=Q9*(SIN(-Z*SIN(Ø)-.5*Ø))
458 LET V5=W5*Q5-W6*Q6
460 LET V6=W6*Q5+W5*Q6
462 LET V7=W7*Q7-W8*Q8
464 LET V8=W8*Q7+W7*Q8
466 LET V1=W1*Q5-W2*Q6
468 LET V2=W1*Q6+W2*Q5
470 LET V3=W3*Q7-W4*Q8
472 LET V4=W3*Q8+W4*Q7
```

```
474 LETQ1=SQR(V1*V1+V2*V2)
476 LETQ2=ATN(V2/V1)
478 IFV1>0THEN482
480 LETQ2=Q2+3.1415927
482 LETQ3=SQR(V3*V3+V4*V4)
484 LETQ4=ATN(V4/V3)
486 IFV3>0THEN490
488 LETQ4=Q4+3.1415927
490 LETQ5=SQR(V5*V5+V6*V6)
492 LETQ6=ATN(V6/V5)
494 IFV5>0THEN498
496 LETQ6=Q6+3.1415927
498 LETQ7=SQR(V7*V7+V8*V8)
500 LETQ8=ATN(V8/V7)
502 IFV7>0THEN506
504 LETQ8=Q8+3.1415927
506 RETURN
508 LETQ3=ATN(Q2/Q1)
510 IFQ1>0THEN514
512 LETQ3=Q3+3.1415927
514 RETURN
516END
```

Defect Sensitivity Factor for a Defect in the Outer Material

Discussion of ENDFT

This program is designed to calculate the defect sensitivity factor for a coil with rectangular cross section, coaxial with and encircling a two-conductor rod of effectively infinite (three or four coil diameters) length. For this program, the defect must be in the outer conductor which is labeled II in Fig. 11, p. 145. The conductors may have different electrical conductivities.

To use this program, one must divide all dimensions by the mean radius of the coil. The results will, of course, be dimensionless and will be referred to as being "normalized." The product of the angular frequency of the driving current, the permeability, the conductivity, and the square of the mean radius of the coil must be calculated for each conductor. Let this product be denoted by $\omega\mu_1\sigma_1\overline{r}^2$ for the inner conductor and by $\omega\mu_2\sigma_2\overline{r}^2$ for the outer one.

Once these calculations have been made, one need only type the following lines into the program. (Note: Parentheses are not typed.)

12 LET R1 = (numerical value of normalized inner coil radius)

14 LET R2 = (numerical value of normalized outer coil radius)

16 LET L1 = (numerical value of normalized distance between bottom of coil and z = 0 plane)

18 LET L2 = (numerical value of normalized distance between top of coil and z = 0 plane)

20 LET M1 = (numerical value of $\omega\mu_1\sigma_1\overline{r}^2$)

Note: If the conductivity of the inner conductor is zero, one must type two additional lines.

60 LET X1 = X

62 LET Y1 = 0

22 LET M2 = (numerical value of $\omega\mu_2\sigma_2\overline{r}^2$)

24 LET A = (numerical value of normalized radius of inner conductor)

26 LET B = (numerical value of normalized radius of outer conductor)

28 LET R9 = (numerical value of normalized r position coordinate of defect)

30 LET Z9 = (numerical value of normalized z position coordinate of defect)

32 LET A9 = (normalization factor)

Note: This value may be obtained with the aid of AIRCO simply by placing the appropriate coil dimensions in that program.

The program may now be run.

The print-out by the computer will have the following format:

```
R1 = (R1)          R2 = (R2)          L1 = (L1)          L2 = (L2)
INN RAD = (A)      OUT RAD = (B)      AIR VALUE = (A9)
M1 = (M1)                             M2 = (M2)
DEFECT POSITION IS                    R = (R9)           Z = (Z9)
X                  MAGNITUDE          PHASE
1                   ------            ------
5                   ------            ------
10                  ------            ------
15                  ------            ------
20                  ------            ------
25                  ------            ------
30                  ------            ------
```

The various symbols enclosed in parentheses are used here to indicate that the numerical value of the symbol will be printed. The first

column, headed "X," is the upper limit of the integration being performed by the computer. The other two columns have self-explanatory headings and appear chiefly to allow one to inspect the convergence of the integration. The magnitude and phase values for X = 30 are considered to be correct since the integration in most cases converges sufficiently well for this value of X.

The example below is presented for additional aid to those who wish to use this program.

Sample Calculation of ENDFT

Let us suppose that we wish to know the defect sensitivity factor for a coil 0.155 in. long with inner and outer radii of 0.420 and 0.580 in., respectively, coaxial with and encircling a two-conductor rod of effectively infinite (three or four coil diameters) length. The inner conductor is assumed to be aluminum with a radius of 0.300 in., while the outer conductor is assumed to be copper with a radius of 0.400 in. Let us further suppose that we are interested in the defect sensitivity factor for the case in which the defect is located 0.350 in. from the axis and 0.0825 in. above the Z = 0 plane. We shall assume the frequency of the driving current to be 1.25 kHz and the distance of the bottom of the coil from the Z = 0 plane to be 0.005 in.

First, we determine the mean coil radius to be 0.500 in., so that

Normalized inner coil radius = 0.420/0.500 = 0.84
Normalized outer coil radius = 0.580/0.500 = 1.16
Normalized distance from bottom of coil to Z = 0 plane = 0.01
Normalized distance from top of coil to Z = 0 plane = 0.32
Normalized radius of inner conductor = 0.300/0.500 = 0.6
Normalized radius of outer conductor = 0.400/0.500 = 0.8
Normalized r position of defect = 0.350/0.500 = 0.7
Normalized z position of defect = 0.0825/0.500 = 0.165

Furthermore,

Angular frequency of driving current = $2\pi \times 1250\ \mathrm{sec}^{-1}$
Permeability of both conductors = $4\pi \times 10^{-7}$ h/m

Conductivity of copper = 5.77×10^7 mhos/m

Conductivity of aluminum = 2.86×10^7 mhos/m

Thus,

$$\omega\mu_1\sigma_1\bar{r}^2 = 45.48$$
$$\omega\mu_2\sigma_2\bar{r}^2 = 91.91$$

At this point, one determines the normalization factor by placing the normalized coil dimensions in AIRCO and running that program. It is worth noting that the normalization factor is independent of all parameters excluding the coil dimensions. This factor is normalization factor 2 in the print-out of AIRCO and for the case in point is found to be 0.01011632. With the normalization factor in hand, the remaining procedure is quite simple.

The above information is now typed into the program as follows:

```
12 LET R1 = 0.84
14 LET R2 = 1.16
16 LET L1 = 0.01
18 LET L2 = 0.32
20 LET M1 = 45.48
22 LET M2 = 91.91
24 LET A = 0.6
26 LET B = 0.8
28 LET R9 = 0.7
30 LET Z9 = 0.165
32 LET A9 = 0.1011632E-1
```

Execution of the program yields the following results:

```
R1 = .84          R2 = 1.16        L1 = .01          L2 = .32
INN RAD = .6      OUT RAD = .8     AIR VALUE = 1.01163E-2
M1 = 45.48                         M2 = 91.91
DEFECT POSITION IS                 R = .7            Z = .165
X                 MAGNITUDE        PHASE
1.                1.69385E-2      -2.87084
5.                .168507         -2.64092
10.               .240658         -2.48695
15.               .250567         -2.4526
20.               .251382         -2.44879
25.               .2513           -2.44928
30.               .25123          -2.44974
```

From this, we see that the defect sensitivity factor is 0.25123 $e^{-j\,2.44974}$.

To obtain the change in normalized impedance, we multiply the defect sensitivity factor by the product of the defect volume and the shape and orientation factor. Note that the defect volume must be calculated from dimensions which are normalized by the mean radius of the coil.

ENDFT Program

```
10 REM              ENDFT            VERSIØN     10/19/70
12 LET R1=.84
14 LET R2=1.16
16 LET L1=.01
18 LET L2=.32
20 LET M1=45.48
22 LET M2=91.91
24 LET A=.6
26 LET B=.8
28 LET R9=0.7
30 LET Z9=.165
32 LET A9=.1011632E-1
34 PRINT"R1=";R1,"R2=";R2,"L1=";L1,"L2=";L2
36 PRINT"INN RAD=";A,"ØUT RAD=";B,"AIR VALUE=";A9
38 PRINT"M1=";M1," ","M2=";M2
40 PRINT"DEFECT PØSITIØN IS","R=";R9,"Z=";Z9
42 PRINT "X","MAGNITUDE","PHASE"
44 LET M9=0
46 LET M7=0
48 LET M8=0
50 LETS1=1E-2
52 LETS2=1
54 LET B1=0
56 LET B2 =S2
58 FØR X = B1 +S1/2 TØ B2 STEP S1
60 LET X2=.707107*SQR(SQR(X*X*X*X+M2*M2)+X*X)
62 LET Y2=.707107*SQR(SQR(X*X*X*X+M2*M2)-X*X)
64 LET X1=.707107*SQR(SQR(X*X*X*X+M1*M1)+X*X)
66 LET Y1=.707107*SQR(SQR(X*X*X*X+M1*M1)-X*X)
68 LET Z1=SQR(X1*X1+Y1*Y1)
70 LET Ø1=ATN(Y1/X1)
72 LET Z2=SQR(X2*X2+Y2*Y2)
74 LET Ø2=ATN(Y2/X2)
76 LETZ=A*Z1
78 LETØ=Ø1
80 GØSUB 316
82 LETI1=Q1
84 LETJ1=Q2
86 LETI2=Q5
```

```
88 LETJ2=Q6
90 LETZ=A*Z2
92 LETØ=Ø2
94 GØSUB 316
96 LETI3=Q1
98 LETJ3=Q2
100 LETK3=Q3
102 LETN3=Q4
104 LETI4=Q5
106 LETJ4=Q6
108 LETK4=Q7
110 LETN4=Q8
112 LETZ=X*B
114 LETØ=0
116 GØSUB 316
118 LET K5=Q3
120 LETI6=Q5
122 LETK6=Q7
124 LETZ=B*Z2
126 LETØ=Ø2
128 GØSUB 316
130 LETI7=Q1
132 LETJ7=Q2
134 LETK7=Q3
136 LETN7=Q4
138 LETI8=Q5
140 LETJ8=Q6
142 LETK8=Q7
144 LETN8=Q8
146 LET Z=R9*Z2
148 LET Ø=Ø2
150 GØSUB 316
152 LETI9=Q5
154 LETJ9=Q6
156 LET K9=Q7
158 LET N9=Q8
160 LET Q1=-X*K5*K8*CØS(N8)+Z2*K7*K6*CØS(Ø2+N7)
162 LET Q2=-X*K5*K8*SIN(N8)+Z2*K7*K6*SIN(Ø2+N7)
164 LET D1=SQR(Q1*Q1+Q2*Q2)
166 GØSUB506
168 LETE1=Q3
170 LET Q1=Z1*I4*I1*CØS(Ø1+J4+J1)-Z2*I2*I3*CØS(Ø2+J2+J3)
172 LET Q2=Z1*I4*I1*SIN(Ø1+J4+J1)-Z2*I2*I3*SIN(Ø2+J2+J3)
174 LET D2=SQR(Q1*Q1+Q2*Q2)
176 GØSUB506
178 LETE2=Q3
180 LET Q1=Z1*K4*I1*CØS(Ø1+N4+J1)+Z2*K3*I2*CØS(Ø2+N3+J2)
182 LET Q2=Z1*K4*I1*SIN(Ø1+N4+J1)+Z2*K3*I2*SIN(Ø2+N3+J2)
184 LET D3=SQR(Q1*Q1+Q2*Q2)
186 GØSUB506
188 LETE3=Q3
190 LET Q1=Z2*I7*K6*CØS(Ø2+J7)+X*I8*K5*CØS(J8)
```

```
192 LET Q2=Z2*I7*K6*SIN(Ø2+J7)+X*I8*K5*SIN(J8)
194 LET D4=SQR(Q1*Q1+Q2*Q2)
196 GØSUB506
198 LETE4=Q3
200 LET Q1=D1*D2*CØS(E1+E2)+D3*D4*CØS(E3+E4)
202 LET Q2=D1*D2*SIN(E1+E2)+D3*D4*SIN(E3+E4)
204 LET D5=SQR(Q1*Q1+Q2*Q2)
206 GØSUB506
208 LETE5=Q3
210 LET G1=(I9*D3*CØS(J9+E3-E5)-K9*D2*CØS(N9+E2-E5))/(B*D5)
212 LET G2=(I9*D3*SIN(J9+E3-E5)-K9*D2*SIN(N9+E2-E5))/(B*D5)
214 LET Z = R2*X
216 LET Q1 = R2
218 GØSUB 268
220 LET Q7 = K7
222 LET Z = R1*X
224 LET Q1 = R1
226 GØSUB 268
228 LET Q8 = K7
230 LET S5=S1*(Q7-Q8)*(SIN(X*(Z9-L1))-SIN(X*(Z9-L2)))
232 LETM7=M7+G1*S5
234 LET M8=M8+G2*S5
236 NEXTX
238 LET M9=ATN(M8/M7)
240 IF M7>ØTHEN244
242 LET M9=M9+PI
244 LET N9=(3*M2)/(4*9.8696044*A9)
246 PRINT X+S1/2,N9*(M7*M7+M8*M8),2*M9
248 LET S1=5E-2
250 IF X>4.5 THEN 258
252 LETB1=1
254 LET B2=5
256 GØ TØ 58
258 LET S2=5
260 LET B1=B2
262 LET B2=B2+S2
264 IFX<29.5THEN58
266 GØ TØ 514
268 IFZ>3THEN308
270 LET L5=INT(20*(1-EXP(-Z/10))+4)
272 LETF1=0
274 LET F2=1
276 LETF6=1
278 LETT5=Q1*Q1*Q1
280 LET T6=1/2
282 LET K7=Q1/(X*X)+(.577215665-1/2-1/3+LØG(Z/2))*T5/6
284 FØR R=1 TØ L5
286 LET F1=F1+1/R
288 LET F2=F2+1/(R+1)
290 LET T5=T5*Z*Z
292 LET T6=T6/(4*R*(R+1))
294 LET C2=T6/(3+2*R)
```

```
296 LET C1=(.577215665-(F1+F2)/2-1/(3+2*R))*C2
298 LET F3=C1*T5+C2*LØG(Z/2)*T5
300 LET K7=K7+F3
302 NEXT R
304 LET K7=K7-PI/(2*X*X*X)
306 GØ TØ 314
308 LET P3=(((.7989839/Z-1.1768576)/Z+.91571421)/Z-.67491295)/Z
310 LET P3=(P3+1.0958276)/Z+1.2533263
312 LET K7=-P3*SQR(Z)*EXP(-Z)/(X*X*X)
314 RETURN
316 IFZ>8THEN390
318 LETL5=20*(1-EXP(-Z/10))+4
320 LET T1=1
322 LETT5=Z/2
324 LETV1=T1
326 LETV2=0
328 V3=0
330 V4=0
332 LETV5=T5*CØS(Ø)
334 LETV6=T5*SIN(Ø)
336 LETV7=V5
338 LETV8=V6
340 LETF1=0
342 LETF2=1
344 FØR R=1 TØ L5
346 LET Z3=CØS(2*R*Ø)
348 LET Z4=SIN(2*R*Ø)
350 LET Z5=CØS((2*R+1)*Ø)
352 LET Z6=SIN((2*R+1)*Ø)
354 LETF1=F1+1/R
356 LETF2=F2+1/(R+1)
358 LET T1=T1*Z*Z/(4*R*R)
360 LET T5=T5*Z*Z/(4*R*(R+1))
362 LET V1=V1+T1*Z3
364 LET V2=V2+T1*Z4
366 LET V3=V3+T1*Z3*F1
368 LET V4=V4+T1*Z4*F1
370 LET V5=V5+T5*Z5
372 LET V7=V7+T5*(F1+F2)*Z5
374 LET V6=V6+T5*Z6
376 LET V8 =V8+T5*(F1+F2)*Z6
378 NEXTR
380 LET V3=V3-(0.577215665+LØG(Z/2))*V1+Ø*V2
382 LET V4=V4-(0.577215665+LØG(Z/2))*V2-Ø*V1
384 LETV7=-V7/2+CØS(Ø)/Z+(.577215665+LØG(Z/2))*V5-Ø*V6
386 LETV8=-V8/2-SIN(Ø)/Z+(.577215665+LØG(Z/2))*V6+Ø*V5
388 GØTØ472
390 LETF1=1
392 LETW7=1
394 LET W5=1
396 LET W3=1
398 LET W1=1
```

```
400 LETT2=1
402 LETT1=1
404 LET W2=0
406 LETW4=0
408 LETW6=0
410 LET W8=0
412 L5=3+20/Z
414 FØR R=1 TØ L5
416 LETF1=-F1
418 LET T2 =T2*(4-(2*R-1)*(2*R-1))/(8*R*Z)
420 LET T1=T1*(-(2*R-1)↑2)/(8*R*Z)
422 LET Z3=CØS(R*Ø)
424 LET Z4=SIN(R*Ø)
426 LET W1=W1+F1*T1*Z3
428 LET W2=W2-F1*T1*Z4
430 LET W3=W3+T1*Z3
432 LET W4=W4-T1*Z4
434 LET W5=W5+F1*T2*Z3
436 LET W6=W6-F1*T2*Z4
438 LET W7 =W7+T2*Z3
440 LET W8=W8-T2*Z4
442 NEXTR
444 LET Q9=.3989422804*EXP(Z*CØS(Ø))/SQR(Z)
446 LET Q5=Q9*(CØS(Z*SIN(Ø)-.5*Ø))
448 LET Q6=Q9*(SIN(Z*SIN(Ø)-.5*Ø))
450 LET Q9=1.253314137*EXP(-Z*CØS(Ø))/SQR(Z)
452 LET Q7=Q9*(CØS(-Z*SIN(Ø)-.5*Ø))
454 LET Q8=Q9*(SIN(-Z*SIN(Ø)-.5*Ø))
456 LET V5=W5*Q5-W6*Q6
458 LET V6=W6*Q5+W5*Q6
460 LET V7=W7*Q7-W8*Q8
462 LET V8=W8*Q7+W7*Q8
464 LET V1=W1*Q5-W2*Q6
466 LET V2=W1*Q6+W2*Q5
468 LET V3=W3*Q7-W4*Q8
470 LET V4=W3*Q8+W4*Q7
472 LETQ1=SQR(V1*V1+V2*V2)
474 LETQ2=ATN(V2/V1)
476 IFV1>ØTHEN480
478 LET Q2=Q2+PI
480 LETQ3=SQR(V3*V3+V4*V4)
482 LETQ4=ATN(V4/V3)
484 IFV3>ØTHEN488
486 LET Q4=Q4+PI
488 LETQ5=SQR(V5*V5+V6*V6)
490 LETQ6=ATN(V6/V5)
492 IFV5>ØTHEN496
494 LET Q6=Q6+PI
496 LETQ7=SQR(V7*V7+V8*V8)
498 LETQ8=ATN(V8/V7)
500 IFV7>ØTHEN504
502 LET Q8=Q8+PI
```

```
504 RETURN
506 LETQ3=ATN(Q2/Q1)
508 IFQ1>0THEN512
510 LET Q3=Q3+PI
512 RETURN
514END
```

Defect Sensitivity Factor for a Lattice of Defects in the Outer Material

Discussion of ENDFTL

This program is designed to calculate the defect sensitivity factor for a coil with rectangular cross section coaxial with and encircling a two-conductor rod of effectively infinite (three or four coil diameters) length. For this program, the defect may be located at any one of a number of points on a lattice in the outer conductor, which is labeled II in Fig. 11, p. 145. The conductors may have different electrical conductivities.

Before proceeding further, it is worth noting that in the execution of this program the data generated by the computer are stored in a data block which is used as input data for another program. Since there exist BASIC compilers which do not have this capability, this program may or may not be executable, depending upon the compiler used. If the latter situation arises, one may delete the character :4: wherever it appears in the program, thus causing the data to be printed at the console; otherwise, one may access the data by using the name :4:.

To use this program, one must divide all dimensions by the mean radius of the coil. The results will, of course, be dimensionless and will be referred to as being "normalized." The product of the angular frequency of the driving current, the permeability, the conductivity, and the square of the mean radius of the coil must be calculated for each conductor. Let this product be denoted by $\omega\mu_1\sigma_1\overline{r}^2$ for the inner conductor and by $\omega\mu_2\sigma_2\overline{r}^2$ for the outer one.

Once these calculations have been made, one must type the following lines into the program. (Note: Parentheses are not typed.)

12 LET R1 = (numerical value of normalized inner coil radius)

14 LET R2 = (numerical value of normalized outer coil radius)

16 LET L1 = (numerical value of normalized distance between bottom of coil and Z = 0 plane)

18 LET L2 = (numerical value of normalized distance between top of coil and Z = 0 plane)

20 LET M1 = (numerical value of $\omega\mu_1\sigma_1\overline{r}^2$)

Note: If the conductivity of the inner conductor is zero, one must type two additional lines:

80 LET X1 = X

82 LET Y1 = 0

22 LET M2 = (numerical value of $\omega\mu_2\sigma_2\overline{r}^2$)

24 LET A = (numerical value of normalized radius of inner conductor)

26 LET B = (numerical value of normalized radius of outer conductor)

28 LET A9 = (normalization factor)

Note: This value may be obtained with the aid of AIRCO simply by placing the appropriate coil dimensions in that program.

30 LET R9 = (numerical value of number of lattice spacings in r direction)

32 LET Z9 = (numerical value of number of lattice spacings in z direction)

34 LET Z8 = (numerical value of maximum normalized z position coordinate of defect)

Note: Neither R9 nor Z9 may exceed 15. The lattice spacing in the r direction is (B-A)/R9, while it is Z8/Z9 in the z direction. In addition, Z8 is measured from the midplane of the coil.

After typing these lines, one need only create an empty data file using the name :4:, and the program may then be run.

During the execution of this program, the integers which are less than or equal to 30 will be consecutively printed at the console. These appear as indications of how far the integration has proceeded. The data resulting from this program will have the following format:

```
(R1)        (R2)      (L1)          (L2)
(A)         (B)       (A9)
(M1)                  (M2)
(R9)        (Z9)      (Z8)
            (R(1))    (R(2))     **********      (R(R9))
(Z(1))      ------    ------     **********      ------
            ------    ------     **********      ------
(Z(2))      ------    ------     **********      ------
            ------    ------     **********      ------
  *           *         *            *              *
  *           *         *            *              *
  *           *         *            *              *
  *           *         *            *              *
(Z(Z9))     ------    ------     **********      ------
            ------    ------     **********      ------
```

The various symbols enclosed in parentheses are used here to indicate that the numerical value of the symbol will be printed. The upper value at each lattice point is the magnitude of the defect sensitivity factor, while the lower one is the phase of the defect sensitivity factor for the case in which the defect is located at the given lattice point. It should be noted that the lattice points for which R9 > 4 will be printed below the last line [i.e., the line containing Z(Z9)].

The example below is presented for additional aid to those who wish to use this program.

Sample Calculation of ENDFTL

Let us suppose that we wish to know the defect sensitivity factor for the case of a coil 0.155 in. long with inner and outer radii of 0.420 and 0.580 in., respectively, coaxial with and encircling a two-conductor rod of effectively infinite (three or four coil diameters) length. The inner conductor is assumed to be aluminum with a radius of 0.300 in., while the outer conductor is assumed to be copper with a radius of 0.400 in. Let us further suppose that we are interested in the defect sensitivity factor for the cases in which the defect is located at any one of the points which lie within 1.000 in. of the midplane of the coil on a 4 × 2 lattice in the copper. We shall assume the frequency of the driving current to be 1.25 kHz and the distance of the bottom of of the coil from the Z = 0 plane to be 0.005 in.

First, we determine the mean coil radius to be 0.500 in., so that

Normalized inner coil radius = 0.420/0.500 = 0.84

Normalized outer coil radius = 0.580/0.500 = 1.16

Normalized distance from bottom of coil to Z = 0 plane = 0.01

Normalized distance from top of coil to Z = 0 plane = 0.32

Normalized radius of inner conductor = 0.300/0.500 = 0.6

Normalized radius of outer conductor = 0.400/0.500 = 0.8

Number of r lattice spacings = 4

Number of z lattice spacings = 2

Maximum normalized z coordinate of defect = 1.000/0.500 = 2

Furthermore,

Angular frequency of driving current = $2\pi \times 1250\ \text{sec}^{-1}$

Permeability of both conductors = $4\pi \times 10^{-7}$ h/m

Conductivity of copper = 5.77×10^{7} mhos/m

Conductivity of aluminum = 2.86×10^{7} mhos/m

Thus,

$$\omega\mu_1\sigma_1\bar{r}^2 = 45.48$$
$$\omega\mu_2\sigma_2\bar{r}^2 = 91.91$$

At this point one determines the normalization factor by placing the normalized coil dimensions in AIRCO and running that program. It is worth noting that the normalization factor is independent of all parameters excluding the coil dimensions. This factor is normalization factor 2 in the print-out of AIRCO and for the case in point is found to be 0.01011632. With the normalization factor in hand, the remaining procedure is quite simple.

The above information is now typed into the program as follows:

```
12 LET R1 = 0.84
14 LET R2 = 1.16
16 LET L1 = 0.01
18 LET L2 = 0.32
20 LET M1 = 45.48
22 LET M2 = 91.91
24 LET A = 0.6
26 LET B = 0.8
```

```
28 LET A9 = 0.1011632E-1
30 LET R9 = 4
32 LET Z9 = 2
34 LET Z8 = 2
```

An empty data file is now created and the program run with the following results:

.84	1.16	.01	.32	
.6	.8	1.01163E-2		
45.48		91.91		
4	2	2		
	.625	.675	.725	.775
-.335	1.14825E-2	1.62134E-2	2.49876E-2	4.15522E-2
	8.26914	8.90257	-2.93334	-2.18561
-1.335	9.77189E-5	1.51725E-4	2.56761E-4	4.61585E-4
	8.10211	8.75756	-3.08512	-2.36424

From this, we see that for the case of a defect located at R = 0.725, Z = -1.335 the defect sensitivity factor is $2.56761 \times 10^{-4} \exp(-j\ 3.08512)$. To obtain the change in normalized impedance, we multiply the defect sensitivity factor by the product of the defect volume and the shape and orientation factor. Note that the defect volume must be calculated from dimensions which are normalized by the mean radius of the coil.

ENDFTL Program

```
10 REM              ENDFTL            VERSIØN     10/20/70
12 LET R1=0.84
14 LET R2=1.16
16 LET L1=0.01
18 LET L2=0.32
20 LET M1=45.48
22 LET M2=91.91
24 LET A=0.6
26 LET B=0.8
28 LET A9=0.1011632E-1
30 LET R9=4
32 LET Z9=2
34 LET Z8=2
36 DIMM(18,18),I(18,18),P(18,18),R(18),Z(18)
38PRINT:4:R1,R2,L1,L2
40PRINT:4:A,B,A9
42PRINT:4:M1," ",M2
44PRINT:4:R9,Z9,Z8
46PRINT:4:
48 PRINT "    A PRØGRAM IS NØW RUNNING. PLEASE DØ NØT DISCØNNECT!!!"
50 PRINT
```

```
52 FØRI=1TØZ9
54 FØRJ=1TØR9
56 LETM(I,J)=0
58 LETI(I,J)=0
60 NEXTJ
62 NEXTI
64 LETS1=1E-2
66 LETS2=1
68 LETB1=0
70 LETB2=S2
72 FØRX=B1+S1/2TØB2STEPS1
74 LETX2=.707107*SQR(SQR(X*X*X*X+M2*M2)+X*X)
76 LETY2=.707107*SQR(SQR(X*X*X*X+M2*M2)-X*X)
78LETX1=.707107*SQR(SQR(X*X*X*X+M1*M1)+X*X)
80LETY1=.707107*SQR(SQR(X*X*X*X+M1*M1)-X*X)
82 LETZ1=SQR(X1*X1+Y1*Y1)
84 LETØ1=ATN(Y1/X1)
86 LETZ2=SQR(X2*X2+Y2*Y2)
88 LET Ø2=ATN(Y2/X2)
90 LETZ=A*Z1
92 LETØ=Ø1
94 GØSUB424
96 LETI1=Q1
98 LETJ1=Q2
100 LETI2=Q5
102 LETJ2=Q6
104 LETZ=A*Z2
106 LETØ=Ø2
108 GØSUB424
110 LETI3=Q1
112 LETJ3=Q2
114 LETK3=Q3
116 LETN3=Q4
118 LETI4=Q5
120 LETJ4=Q6
122 LETK4=Q7
124 LETN4=Q8
126 LETZ=X*B
128 LETØ=0
130 GØSUB424
132 LET K5=Q3
134 LETI6=Q5
136 LETK6=Q7
138 LETZ=B*Z2
140 LETØ=Ø2
142 GØSUB424
144 LETI7=Q1
146 LETJ7=Q2
148 LETK7=Q3
150 LETN7=Q4
152 LETI8=Q5
154 LETJ8=Q6
156 LETK8=Q7
158 LET N8=Q8
160 LET Q1=-X*K5*K8*CØS(N8)+Z2*K7*K6*CØS(Ø2+N7)
162 LET Q2=-X*K5*K8*SIN(N8)+Z2*K7*K6*SIN(Ø2+N7)
164 LETD1=SQR(Q1*Q1+Q2*Q2)
166 GØSUB614
168 LETE1=Q3
```

```
170 LETQ1=Z1*I4*I1*CØS(Ø1+J4+J1)-Z2*I2*I3*CØS(Ø2+J2+J3)
172 LETQ2=Z1*I4*I1*SIN(Ø1+J4+J1)-Z2*I2*I3*SIN(Ø2+J2+J3)
174 LETD2=SQR(Q1*Q1+Q2*Q2)
176 GØSUB614
178 LETE2=Q3
180 LET Q1=Z1*K4*I1*CØS(Ø1+N4+J1)+Z2*K3*I2*CØS(Ø2+N3+J2)
182 LET Q2=Z1*K4*I1*SIN(Ø1+N4+J1)+Z2*K3*I2*SIN(Ø2+N3+J2)
184 LETD3=SQR(Q1*Q1+Q2*Q2)
186 GØSUB614
188 LETE3=Q3
190 LET Q1=Z2*I7*K6*CØS(Ø2+J7)+X*I8*K5*CØS(J8)
192 LET Q2=Z2*I7*K6*SIN(Ø2+J7)+X*I8*K5*SIN(J8)
194 LETD4=SQR(Q1*Q1+Q2*Q2)
196 GØSUB614
198 LETE4=Q3
200 LETQ1=D1*D2*CØS(E1+E2)+D3*D4*CØS(E3+E4)
202 LETQ2=D1*D2*SIN(E1+E2)+D3*D4*SIN(E3+E4)
204 LETD5=SQR(Q1*Q1+Q2*Q2)
206 GØSUB614
208 LETE5=Q3
210 LETZ=R2*X
212 LETQ1=R2
214 GØSUB376
216 LETQ7=K7
218 LETZ=R1*X
220 LETQ1=R1
222 GØSUB376
224 LETS6=Q7-K7
226 LETØ=Ø2
228 FØRJ=1TØR9
230 LETR(J)=A+(J-.5)*(B-A)/R9
232 LETZ=Z2*R(J)
234 GØSUB424
236 LETI9=Q5
238 LETJ9=Q6
240 LETK9=Q7
242 LETN9=Q8
244 LETG1=(I9*D3*CØS(J9+E3-E5)-K9*D2*CØS(N9+E2-E5))/(B*D5)
246 LETG2=(I9*D3*SIN(J9+E3-E5)-K9*D2*SIN(N9+E2-E5))/(B*D5)
248 FØRI=1TØZ9
250 LETZ(I)=(L1+L2)/2-(I-.5)*Z8/Z9
252 LETS5=S1*S6*(SIN(X*(Z(I)-L1))-SIN(X*(Z(I)-L2)))
254 LETM(I,J)=M(I,J)+G1*S5
256 LETI(I,J)=I(I,J)+G2*S5
258 NEXTI
260 NEXTJ
262 NEXTX
264 PRINTX+S1/2,
266 LETS1=5E-2
268 LETB1=B1+S2
270 LETB2=B2+S2
272 IFX<29.5THEN72
274 FØRI=1TØZ9
276 FØRJ=1TØR9
278 LETP(I,J)=2*ATN(I(I,J)/M(I,J))
280 IFM(I,J)>ØTHEN284
282 LETP(I,J)=P(I,J)+2*PI
284 LETM(I,J)=M(I,J)*M(I,J)+I(I,J)*I(I,J)
286 NEXTJ
```

```
288 NEXTI
290 LETQ=(3*M2)/(4*9.8696044*A9)
292PRINT:4:" ",
294 FØRJ=1TØ4
296PRINT:4:R(J),
298 NEXTJ
300 FØRI=1TØZ9
302PRINT:4:Z(I),
304 FØRJ=1TØ4
306PRINT:4:Q*M(I,J),
308 NEXTJ
310PRINT:4:" ",
312 FØRJ=1TØ4
314PRINT:4:P(I,J),
316 NEXTJ
318PRINT:4:
320 NEXTI
322 IFR9<4.5THEN622
324 FØRJ=5TØ9
326PRINT:4:R(J),
328 NEXTJ
330 FØRI=1TØZ9
332 FØRJ=5TØ9
334PRINT:4:Q*M(I,J),
336 NEXTJ
338 FØRJ=5TØ9
340PRINT:4:P(I,J),
342 NEXTJ
344PRINT:4:
346 NEXTI
348 IFR9<9.5THEN622
350 FØRJ=10TØ14
352PRINT:4:R(J),
354 NEXTJ
356 FØRI=1TØZ9
358 FØRJ=10TØ14
360PRINT:4:Q*M(I,J),
362 NEXTJ
364 FØRJ=10TØ14
366PRINT:4:P(I,J),
368 NEXTJ
370PRINT:4:
372 NEXTI
374 IFR9<14.5THEN622
376 IFZ>3THEN416
378 LETL5=INT(20*(1-EXP(-Z/10))+4)
380 LETF1=0
382 LETF2=1
384 LETF6=1
386 LETT5=Q1*Q1*Q1
388 LETT6=1/2
390 LETK7=Q1/(X*X)+(.577215665-1/2-1/3+LØG(Z/2))*T5/6
392 FØRR=1TØL5
394 LETF1=F1+1/R
396 LETF2=F2+1/(R+1)
398 LET T5=T5*Z*Z
400 LETT6=T6/(4*R*(R+1))
402 LETC2=T6/(3+2*R)
404 LETC1=(.577215665-(F1+F2)/2-1/(3+2*R))*C2
```

```
406 LETF3=C1*T5+C2*LØG(Z/2)*T5
408 LETK7=K7+F3
410 NEXTR
412 LETK7=K7-3.1415927/(2*X*X*X)
414 GØTØ422
416 LETP3=(((.7989839/Z-1.1768576)/Z+.91571421)/Z-.67491295)/Z
418 LETP3=(P3+1.0958276)/Z+1.2533263
420 LETK7=-P3*SQR(Z)*EXP(-Z)/(X*X*X)
422 RETURN
424 IFZ>8THEN498
426 LETL5=20*(1-EXP(-Z/10))+4
428 LET T1=1
430 LETT5=Z/2
432 LETV1=T1
434 LETV2=0
436 V3=0
438 V4=0
440 LETV5=T5*CØS(Ø)
442 LETV6=T5*SIN(Ø)
444 LETV7=V5
446 LETV8=V6
448 LETF1=0
450 LETF2=1
452 FØR R=1 TØ L5
454 LET Z3=CØS(2*R*Ø)
456 LET Z4=SIN(2*R*Ø)
458 LET Z5=CØS((2*R+1)*Ø)
460 LET Z6=SIN((2*R+1)*Ø)
462 LETF1=F1+1/R
464 LETF2=F2+1/(R+1)
466 LET T1=T1*Z*Z/(4*R*R)
468 LET T5=T5*Z*Z/(4*R*(R+1))
470 LET V1=V1+T1*Z3
472 LET V2=V2+T1*Z4
474 LET V3=V3+T1*Z3*F1
476 LET V4=V4+T1*Z4*F1
478 LET V5=V5+T5*Z5
480 LET V7=V7+T5*(F1+F2)*Z5
482 LET V6=V6+T5*Z6
484 LET V8 =V8+T5*(F1+F2)*Z6
486 NEXTR
488 LET V3=V3-(0.577215665+LØG(Z/2))*V1+Ø*V2
490 LET V4=V4-(0.577215665+LØG(Z/2))*V2-Ø*V1
492 LETV7=-V7/2+CØS(Ø)/Z+(.577215665+LØG(Z/2))*V5-Ø*V6
494 LETV8=-V8/2-SIN(Ø)/Z+(.577215665+LØG(Z/2))*V6+Ø*V5
496 GØTØ580
498 LETF1=1
500 LETW7=1
502 LETW5=1
504 LET W3=1
506 LET W1=1
508 LETT2=1
510 LETT1=1
512 LET W2=0
514 LETW4=0
516 LETW6=0
518 LETW8=0
520 L5=3+20/Z
```

```
522 FØRR=1TØL5
524 LETF1=-F1
526 LET T2 =T2*(4-(2*R-1)*(2*R-1))/(8*R*Z)
528 LET T1=T1*(-(2*R-1)↑2)/(8*R*Z)
530 LET Z3=CØS(R*Ø)
532 LET Z4=SIN(R*Ø)
534 LET W1=W1+F1*T1*Z3
536 LET W2=W2-F1*T1*Z4
538 LET W3=W3+T1*Z3
540 LET W4=W4-T1*Z4
542 LET W5=W5+F1*T2*Z3
544 LET W6=W6-F1*T2*Z4
546 LET W7 =W7+T2*Z3
548 LET W8=W8-T2*Z4
550 NEXT R
552 LET Q9=.3989422804*EXP(Z*CØS(Ø))/SQR(Z)
554 LET Q5=Q9*(CØS(Z*SIN(Ø)-.5*Ø))
556 LET Q6=Q9*(SIN(Z*SIN(Ø)-.5*Ø))
558 LET Q9=1.253314137*EXP(-Z*CØS(Ø))/SQR(Z)
560 LET Q7=Q9*(CØS(-Z*SIN(Ø)-.5*Ø))
562 LET Q8=Q9*(SIN(-Z*SIN(Ø)-.5*Ø))
564 LET V5=W5*Q5-W6*Q6
566 LET V6=W6*Q5+W5*Q6
568 LET V7=W7*Q7-W8*Q8
570 LET V8=W8*Q7+W7*Q8
572 LET V1=W1*Q5-W2*Q6
574 LET V2=W1*Q6+W2*Q5
576 LET V3=W3*Q7-W4*Q8
578 LET V4=W3*Q8+W4*Q7
580 LETQ1=SQR(V1*V1+V2*V2)
582 LETQ2=ATN(V2/V1)
584 IFV1>ØTHEN588
586 LETQ2=Q2+3.1415927
588 LETQ3=SQR(V3*V3+V4*V4)
590 LETQ4=ATN(V4/V3)
592 IFV3>ØTHEN596
594 LETQ4=Q4+3.1415927
596 LETQ5=SQR(V5*V5+V6*V6)
598 LETQ6=ATN(V6/V5)
600 IFV5>ØTHEN604
602 LETQ6=Q6+3.1415927
604 LETQ7=SQR(V7*V7+V8*V8)
606 LETQ8=ATN(V8/V7)
608 IFV7>ØTHEN612
610 LETQ8=Q8+3.1415927
612 RETURN
614 LETQ3=ATN(Q2/Q1)
616 IFQ1>ØTHEN620
618 LETQ3=Q3+3.1415927
620 RETURN
622END

READY
```

Defect Sensitivity Factor for a Differential Coil System
for a Lattice of Defects

Discussion of READIN

This program is designed to calculate the differential defect sensitivity for a differential coil system which is shown encircling a two-conductor rod in Fig. 12. One may also use this program for a differential coil system inside a two-conductor tube. The coils must have rectangular cross sections, identical dimensions, and a common axis. The two conductors need not have the same electrical conductivity.

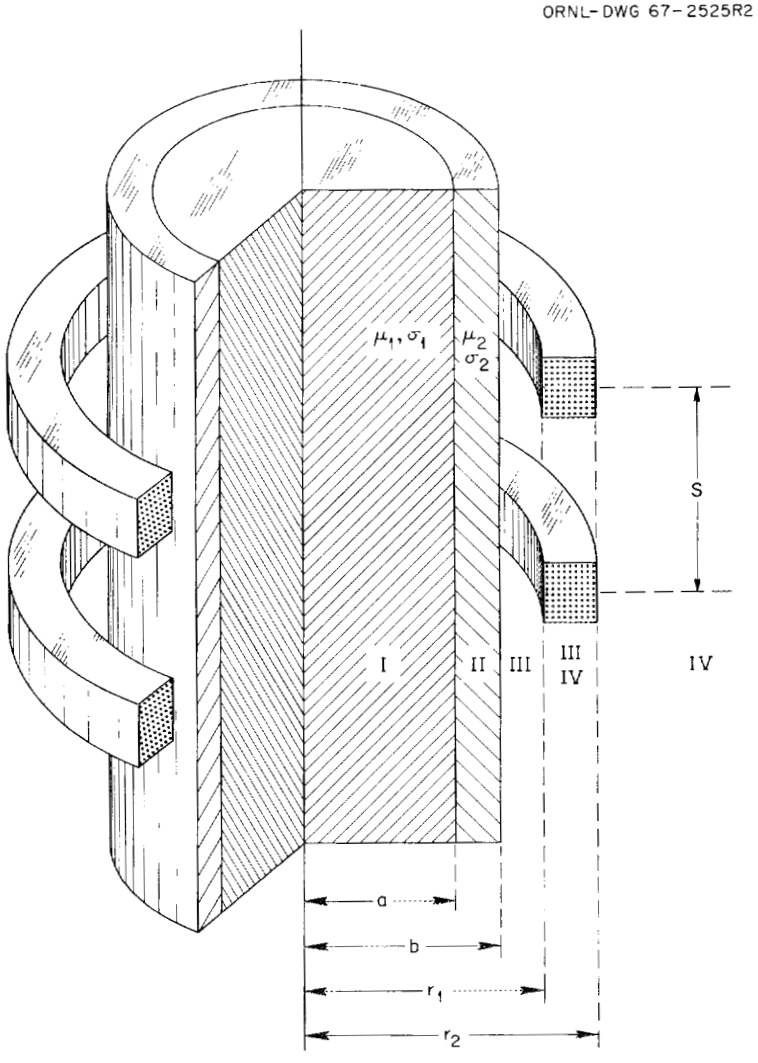

Fig. 12. A Differential Encircling Coil System.

To use this program, one must execute the program which calculates the defect sensitivity factor for a coil encircling a two-conductor rod (ENDFTL) or for a coil inside a two-conductor tube (INDFTL). The output data from either of these programs comprise the input data for the program at hand. It is worth noting that the data generated by the computer in the execution of either ENDFTL or INDFTL are stored in a data block, which is then read as input for this program. Since there exist BASIC compilers which do not have this capability, this program may or may not be executable, depending upon the compiler used.

Once the execution of either of the above-named programs is complete, one need only type the following lines into the program. (Note: Parentheses are not typed.)

12 LET D = (numerical value of center-to-center coil spacing)

Note: This spacing is in units of z lattice spacings, which are equal to Z8/Z9 for either case of interest. The definitions of Z8 and Z9 can be found in the explanatory material for either ENDFTL or INDFTL. The name of the data file must now be typed into each line which contains an "input" command (e.g., line 18) which becomes: 18 input: (name of file containing data): R1, R2, L1, L2. The program may now be run.

The print-out by the computer will have the following format:

```
RADII OF BOTH COILS ARE            INNER = (R1)   OUTER = (R2)
LENGTH OF BOTH COILS IS (L2-L1)    AIR VALUE IS (A9)
RADII OF CONDUCTORS ARE            INNER = (A)    OUTER = (B)
COILS ARE SEPARATED (D*Z8/Z9)      M1 = (M1)      M2 = (M2)
   Z    ,    R    (R(1))           (R(2))      **********     (R(R9))
(Z(1))           ------            ------      **********     ------
                 ------            ------      **********     ------
(Z(2))           ------            ------      **********     ------
                 ------            ------      **********     ------
   *               *                 *            *             *
   *               *                 *            *             *
   *               *                 *            *             *
   *               *                 *            *             *
(Z(Z9'))         ------            ------      **********     ------
                 ------            ------      **********     ------
```

The various symbols enclosed in parentheses are used here to indicate that the numerical value of the symbol will be printed. All lengths are normalized and the Z(I)'s are measured from the midplane of the coil

system. The upper value at each lattice point is the magnitude of the differential defect sensitivity factor, while the lower one is the phase of the differential defect sensitivity factor for the case in which the defect is located at the given lattice point. It should be noted here that the lattice points for which R9 > 4 will be printed below the last line [i.e., the line containing Z(Z9′)]. Furthermore, Z9′ = Z9 − 1 − Int(D/2), where Z9 and all other symbols are defined in the explanatory material for both ENDFTL and INDFTL.

The example below is presented for additional aid to those who wish to use this program.

Sample Calculation of READIN

Let us suppose that we are interested in the differential defect sensitivity factor for the case in which the input data are just those obtained from the example immediately preceding ENDFTL. Furthermore, let us suppose that the center-to-center separation of the coils is two z lattice spacings.

Since the output of ENDFTL is written on the file :4:, the following lines are typed into the program:

```
10 LET D = 2
18 INPUT   :4: R1, R2, L1, L2, etc. for the other input lines.
```

The program is then run with the following results:

```
RADII OF BOTH COILS ARE        INNER = .84        OUTER = 1.16
LENGTH OF BOTH COILS IS  .31   AIR VALUE IS 1.01163E-2
RADII OF CONDUCTORS ARE        INNER = .6         OUTER = .8
COILS ARE SEPARATED 2          M1 = 45.48         M2 = 91.91

   Z    ,   R      .625          .675          .725          .775
-.5               1.13862E-2   1.60633E-2   2.47338E-2   .041098
                 -4.2958      -3.66244     -2.93177     -2.18361
```

From this, we see that for the case in which the defect is located at R = 0.725, Z = −0.5, the differential defect sensitivity factor is $0.247338 \times 10^{-1}\ e^{-j\ 2.93177}$.

READIN Program

```
10 REM            READIN            VERSIØN  11/15/69
12 LETD=3
14 LETH=INT(D/2)
16 DIM M(18,18),P(18,18),S(18,18),I(18,18),Ø(18,18),R(18),Z(18)
18 INPUT:4:R1,R2,L1,L2
20 INPUT:4:A,B,A9
22 INPUT:4:M1,M2
24 INPUT:4:R9,Z9,Z8
26 FØRJ=1TØ4
28 INPUT:4:R(J)
30 NEXTJ
32 FØRI=1TØZ9
34 INPUT:4:Z(I)
36 FØRJ=1TØ4
38 INPUT:4:M(I,J)
40 NEXTJ
42 FØRJ=1TØ4
44 INPUT:4:P(I,J)
46 NEXTJ
48 NEXTI
50 IFR9<4.5THEN98
52 FØR J=5 TØ 9
54 INPUT:4:R(J)
56 NEXTJ
58 FØRI=1TØZ9
60 FØRJ=5TØ9
62 INPUT:4:M(I,J)
64 NEXTJ
66 FØRJ=5TØ9
68 INPUT:4:P(I,J)
70 NEXTJ
72 NEXTI
74 IFR9<9.5THEN98
76 FØRJ=10TØ14
78 INPUT:4:R(J)
80 NEXTJ
82 FØRI=1TØZ9
84 FØRJ=10TØ14
86 INPUT:4:M(I,J)
88 NEXTJ
90 FØRJ=10TØ14
92 INPUT:4:P(I,J)
94 NEXTJ
96 NEXTI
98 PRINT"RADII ØF BØTH CØILS ARE","INNER=";R1,"ØUTER=";R2
100 PRINT"LENGTH ØF BØTH CØILS IS";L2-L1,"AIR VALUE IS";A9
102 PRINT"RADII OF CØNDUCTØRS ARE","INNER=";A,"ØUTER=";B
104 PRINT"CØILS ARE SEPARATED";D*Z8/Z9,"M1=";M1,"M2=";M2
106 FØR I=H+1 TØ Z9
```

```
108 LET Q=I-H
110 IF I>D THEN 116
112 LET K=D+1-I
114 GØ TØ 118
116 LET K=I-D
118 FØR J=1 TØ R9
120 LET S(Q,J)=M(K,J)*CØS(P(K,J))-M(I,J)*CØS(P(I,J))
122 LET I(Q,J)=M(K,J)*SIN(P(K,J))-M(I,J)*SIN(P(I,J))
124 IF S(Q,J)<>0 THEN130
126 LETØ(Q,J)=-(3.1415927)/2
128 GØ TØ 136
130 LETØ(Q,J)=ATN(I(Q,J)/S(Q,J))
132 IFS(Q,J)>0 THEN136
134 LETØ(Q,J)=Ø(Q,J)-3.1415927
136 LET S(Q,J)=SQR(S(Q,J)*S(Q,J)+I(Q,J)*I(Q,J))
138 NEXT J
140 NEXT I
142 FØR I=1 TØ Z9-(H+1)
144 LET Z(I)=Z(I)-(L1+L2)/2
146 NEXT I
148 IF D=2*H THEN 158
150 LET Z=Z(1)
152 FØR I=1 TØ Z9-(H+1)
154 LET Z(I)=Z(I)-Z
156 NEXT I
158 PRINT
160 PRINT"     Z   ,   R",
162 FØRJ=1TØ4
164 PRINTR(J),
166 NEXTJ
168 FØRI=1TØZ9-(H+1)
170 @RINTZ(I),
172 FØRJ=1TØ4
174 PRINT S(I,J),
176 NEXTJ
178 PRINT" ",
180 FØRJ=1TØ4
182 PRINTØ(I,J),
184 NEXTJ
186 PRINT
188 NEXTI
190 IFR9<4.5THEN242
192 FØRJ=5TØ9
194 PRINTR(J),
196 NEXTJ
198 FØRI=1TØZ9-(H+1)
200 FØRJ=5TØ9
202 PRINT S(I,J),
204 NEXTJ
206 FØRJ=5TØ9
208 PRINTØ(I,J),
210 NEXTJ
```

```
212 PRINT
214 NEXTI
216 IFR9<9.5THEN242
218 FØRJ=10TØ14
220 PRINTR(J),
222 NEXTJ
224 FØRI=1TØZ9-(H+1)
226 FØRJ=10TØ14
228 PRINT S(I,J),
230 NEXTJ
232 FØRJ=10TØ14
234 PRINTØ(I,J),
236 NEXTJ
238 PRINT
240 NEXTI
242 PRINT
244 END
```

Defect Sensitivity Factor for a Defect in the Base Material

Discussion of ENDFB

This program is designed to calculate the defect sensitivity factor for a coil with rectangular cross section coaxial with and encircling a two-conductor rod of effectively infinite (three or four coil diameters) length. For this program, the defect must be in the inner conductor which is labeled II in Fig. 11, p. 145. The conductors may have different electrical conductivities.

To use this program, one must first divide all dimensions by the mean radius of the coil. The results will, of course, be dimensionless and will be referred to as being "normalized." The product of the angular frequency of the driving current, the permeability, the conductivity, and the square of the mean radius of the coil must be calculated for each conductor. Let this product be denoted by $\omega\mu_1\sigma_1\bar{r}^2$ for the inner conductor and by $\omega\mu_2\sigma_2\bar{r}^2$ for the outer one.

Once these calculations have been made, one need only type the following lines into the program. (Note: Parentheses are not typed.)

12 LET R1 = (numerical value of the normalized inner coil radius)

14 LET R2 = (numerical value of the normalized outer coil radius)

16 LET L1 = (numerical value of the normalized distance between bottom of coil and Z = 0 plane)

18 LET L2 = (numerical value of the normalized distance between top of coil and Z = 0 plane)

20 LET M1 = (numerical value of $\omega\mu_1\sigma_1\overline{r}^2$)

22 LET M2 = (numerical value of $\omega\mu_2\sigma_2\overline{r}^2$)

Note: If the conductivity of the outer conductor is zero, one must type two additional lines:

60 LET X2 = X

62 LET Y2 = 0

24 LET A = (numerical value of normalized radius of inner conductor)

26 LET B = (numerical value of normalized radius of outer conductor)

28 LET R9 = (numerical value of normalized r position coordinate of defect)

30 LET Z9 = (numerical value of normalized z position coordinate of defect)

32 LET A9 = (normalization factor)

Note: This value may be obtained with the aid of AIRCO simply by placing the appropriate coil dimensions in that program.

The program may now be run.

The print-out by the computer will have the following format:

```
R1 = (R1)          R2 = (R2)          L1 = (L1)          L2 = (L2)
INN RAD = (A)      OUT RAD = (B)      AIR VALUE = (A9)
M1 = (M1)                             M2 = (M2)
DEFECT POSITION IS                    R = (R9)           Z = (Z9)
X                  MAGNITUDE          PHASE
1                   ------            ------
5                   ------            ------
10                  ------            ------
15                  ------            ------
20                  ------            ------
25                  ------            ------
30                  ------            ------
```

The various symbols enclosed in parentheses are used here to indicate that the numerical value of the symbol will be printed. The first column, headed "X," is the upper limit of the integration being performed by the computer. The other two columns have self-explanatory headings and appear primarily to allow one to inspect the convergence of the

integration. The magnitude and phase values for X = 30 are considered to be correct since the integration, in most cases, converges sufficiently well for this value of X.

The example below is presented for additional aid to those who wish to use this program.

Sample Calculation of ENDFB

Let us suppose that we wish to know the defect sensitivity factor for a coil 0.155 in. in length with inner and outer radii of 0.420 and 0.580 in., respectively, coaxial with and encircling a two-conductor rod of effectively infinite (three or four coil diameters) length. The inner conductor is assumed to be aluminum with a radius of 0.300 in., while the outer conductor is assumed to be copper with a radius of 0.400 in. Let us further suppose that we are interested in the defect sensitivity factor for the case in which the defect is located 0.250 in. from the axis and 0.0825 in. above the Z = 0 plane. We shall assume the frequency of the driving current to be 1.25 kHz and the distance of the bottom of the coil from the Z = 0 plane to be 0.005 in.

First, we determine the mean coil radius to be 0.500 in., so that

Normalized inner coil radius = 0.420/0.500 = 0.84
Normalized outer coil radius = 0.580/0.500 = 1.16
Normalized distance from botton of coil to Z = 0 plane = 0.01
Normalized distance from top of coil to Z = 0 plane = 0.32
Normalized radius of inner conductor = 0.300/0.500 = 0.6
Normalized radius of outer conductor = 0.400/0.500 = 0.8
Normalized r position of defect = 0.200/0.500 = 0.5
Normalized z position of defect = 0.0825/0.500 = 0.165

Furthermore,

Angular frequency of driving current = $2\pi \times 1250$ sec^{-1}
Permeability of both conductors = $4\pi \times 10^{-7}$ h/m
Conductivity of copper = 5.77×10^{7} mhos/m
Conductivity of aluminum = 2.86×10^{7} mhos/m

Thus,

$$\omega\mu_1\sigma_1\bar{r}^2 = 45.48$$
$$\omega\mu_2\sigma_2\bar{r}^2 = 91.91$$

At this point one determines the normalization factor by placing the normalized coil dimensions in AIRCO and running that program. It is worth noting that the normalization factor is independent of all parameters excluding the coil dimensions. This factor is normalization factor 2 in the print-out of AIRCO and for the case in point is found to be 0.01011632. With the normalization factor in hand, the remaining procedure is quite simple.

The above information is now typed into the program as follows:

```
12 LET R1 = 0.84
14 LET R2 = 1.16
16 LET L1 = 0.01
18 LET L2 = 0.32
20 LET M1 = 45.48
22 LET M2 = 91.91
24 LET A = 0.6
26 LET B = 0.8
28 LET R9 = 0.5
30 LET Z9 = 0.165
32 LET A9 = 0.1011632E-1
```

Execution of the program yields the following results:

```
R1 = .84          R2 = 1.16         L1 = .01          L2 = .32
INN RAD = .6      OUT RAD = .8      AIR VALUE = 1.01163E-2
M1 = 45.48                          M2 = 91.91
DEFECT POSITION IS                  R = .5            Z = .165
X                 MAGNITUDE         PHASE
1.                1.53765E-3        7.54112
5.                1.34156E-2        7.85114
10.               .016374           8.00735
15.               1.64629E-2        8.02217
20.               1.64634E-2        8.02278
25.               1.64634E-2        8.02276
30.               1.64634E-2        8.02275
```

From this we see that the defect sensitivity factor is $0.0164634\ e^{j8.02275}$.

To obtain the change in normalized impedance, we multiply the defect sensitivity factor by the product of the defect volume and the shape and orientation factor. Note that the defect volume must be calculated from dimensions which are normalized by the mean radius of the coil.

ENDFB Program

```
10 REM            ENDFB          VERSIØN      10/31/69
12 LET R1=.84
14 LET R2=1.16
16 LET L1=.01
18 LET L2=.32
20 LET M1=45.48
22 LET M2=91.91
24 LET A=.6
26 LET B=.8
28 LET R9=.5
30 LET Z9=.165
32 LET A9=.1011632E-1
34 PRINT"R1=";R1,"R2=";R2,"L1=";L1,"L2=";L2
36 PRINT"INN RAD=";A,"ØUT RAD=";B,"AIR VALUE=";A9
38 PRINT"M1=";M1," ","M2=";M2
40 PRINT"DEFECT PØSITIØN IS","R=";R9,"Z=";Z9
42 PRINT "X","MAGNITUDE","PHASE"
44 LET M9=0
46 LET M7=0
48 LET M8=0
50 LETS1=1E-2
52 LETS2=1
54 LET B1=0
56 LET B2 =S2
58 FØR X = B1 +S1/2 TØ B2 STEP S1
60 LET X2=.707107*SQR(SQR(X*X*X*X+M2*M2)+X*X)
62 LET Y2=.707107*SQR(SQR(X*X*X*X+M2*M2)-X*X)
64 LET X1=.707107*SQR(SQR(X*X*X*X+M1*M1)+X*X)
66 LET Y1=.707107*SQR(SQR(X*X*X*X+M1*M1)-X*X)
68 LET Z1=SQR(X1*X1+Y1*Y1)
70 LET Ø1=ATN(Y1/X1)
72 LET Z2=SQR(X2*X2+Y2*Y2)
74 LET Ø2=ATN(Y2/X2)
76 LETZ=A*Z1
78 LETØ=Ø1
80 GØSUB 312
82 LETI1=Q1
84 LETJ1=Q2
86 LETI2=Q5
88 LETJ2=Q6
90 LETZ=A*Z2
92 LETØ=Ø2
```

```
94 GØSUB 312
96 LETI3=Q1
98 LETJ3=Q2
100 LETK3=Q3
102 LETN3=Q4
104 LETI4=Q5
106 LETJ4=Q6
108 LETK4=Q7
110 LETN4=Q8
112 LETZ=X*B
114 LETØ=0
116 GØSUB 312
118 LET K5=Q3
120 LETI6=Q5
122 LETK6=Q7
124 LETZ=B*Z2
126 LETØ=Ø2
128 GØSUB 312
130 LETI7=Q1
132 LETJ7=Q2
134 LETK7=Q3
136 LETN7=Q4
138 LETI8=Q5
140 LETJ8=Q6
142 LETK8=Q7
144 LETN8=Q8
146 LETZ=R9*Z1
148 LETØ=Ø1
150 GØ SUB 312
152 LETI9=Q5
154 LETJ9=Q6
156 LET Q1=-X*K5*K8*CØS(N8)+Z2*K7*K6*CØS(Ø2+N7)
158 LET Q2=-X*K5*K8*SIN(N8)+Z2*K7*K6*SIN(Ø2+N7)
160 LET D1=SQR(Q1*Q1+Q2*Q2)
162 GØSUB502
164 LETE1=Q3
166 LET Q1=Z1*I4*I1*CØS(Ø1+J4+J1)-Z2*I2*I3*CØS(Ø2+J2+J3)
168 LET Q2=Z1*I4*I1*SIN(Ø1+J4+J1)-Z2*I2*I3*SIN(Ø2+J2+J3)
170 LET D2=SQR(Q1*Q1+Q2*Q2)
172 GØSUB502
174 LETE2=Q3
176 LET Q1=Z1*K4*I1*CØS(Ø1+N4+J1)+Z2*K3*I2*CØS(Ø2+N3+J2)
178 LET Q2=Z1*K4*I1*SIN(Ø1+N4+J1)+Z2*K3*I2*SIN(Ø2+N3+J2)
180 LET D3=SQR(Q1*Q1+Q2*Q2)
182 GØSUB502
184 LETE3=Q3
186 LET Q1=Z2*I7*K6*CØS(Ø2+J7)+X*I8*K5*CØS(J8)
188 LET Q2=Z2*I7*K6*SIN(Ø2+J7)+X*I8*K5*SIN(J8)
190 LET D4=SQR(Q1*Q1+Q2*Q2)
192 GØSUB502
194 LETE4=Q3
196 LET Q1=D1*D2*CØS(E1+E2)+D3*D4*CØS(E3+E4)
```

```
198 LET Q2=D1*D2*SIN(E1+E2)+D3*D4*SIN(E3+E4)
200 LET D5=SQR(Q1*Q1+Q2*Q2)
202 GØSUB502
204 LETE5=Q3
206 LET G1=I9*CØS(J9-E5)/(A*B*D5)
208 LET G2=I9*SIN(J9-E5)/(A*B*D5)
210 LET Z = R2*X
212 LET Q1 = R2
214 GØSUB 264
216 LET Q7 = K7
218 LET Z = R1*X
220 LET Q1 = R1
222 GØSUB 264
224 LET Q8 = K7
226 LET S5=S1*(Q7-Q8)*(SIN(X*(Z9-L1))-SIN(X*(Z9-L2)))
228 LETM7=M7+G1*S5
230 LET M8=M8+G2*S5
232 NEXTX
234 LET M9=ATN(M8/M7)
236 IF M7>0THEN240
238 LET M9=M9+PI
240 LET N9=(3*M1)/(4*9.8696044*A9)
242 PRINT X+S1/2,N9*(M7*M7+M8*M8),2*M9
244 LET S1=5E-2
246 IF X>4.5 THEN 254
248 LETB1=1
250 LET B2=5
252 GØ TØ 58
254 LET S2=5
256 LET B1=B2
258 LET B2=B2+S2
260 IFX<29.5THEN58
262 GØ TØ 510
264 IFZ>3THEN304
266 LET L5=INT(20*(1-EXP(-Z/10))+4)
268 LETF1=0
270 LET F2=1
272 LETF6=1
274 LETT5=Q1*Q1*Q1
276 LET T6=1/2
278 LET K7=Q1/(X*X)+(.577215665-1/2-1/3+LØG(Z/2))*T5/6
280 FØR R=1 TØ L5
282 LET F1=F1+1/R
284 LET F2=F2+1/(R+1)
286 LET T5=T5*Z*Z
288 LET T6=T6/(4*R*(R+1))
290 LET C2=T6/(3+2*R)
292 LET C1=(.577215665-(F1+F2)/2-1/(3+2*R))*C2
294 LET F3=C1*T5+C2*LØG(Z/2)*T5
296 LET K7=K7+F3
298 NEXT R
300 LET K7=K7-PI/(2*X*X*X)
```

```
302 GØ TØ 310
304 LET P3=(((.7989839/Z-1.1768576)/Z+.91571421)/Z-.67491295)/Z
306 LET P3=(P3+1.0958276)/Z+1.2533263
308 LET K7=-P3*SQR(Z)*EXP(-Z)/(X*X*X)
310 RETURN
312 IFZ>8THEN386
314 LETL5=20*(1-EXP(-Z/10))+4
316 LET T1=1
318 LETT5=Z/2
320 LETV1=T1
322 LETV2=0
324 V3=0
326 V4=0
328 LETV5=T5*CØS(Ø)
330 LETV6=T5*SIN(Ø)
332 LETV7=V5
334 LETV8=V6
336 LETF1=0
338 LETF2=1
340 FØR R=1 TØ L5
342 LET Z3=CØS(2*R*Ø)
344 LET Z4=SIN(2*R*Ø)
346 LET Z5=CØS((2*R+1)*Ø)
348 LET Z6=SIN((2*R+1)*Ø)
350 LETF1=F1+1/R
352 LETF2=F2+1/(R+1)
354 LET T1=T1*Z*Z/(4*R*R)
356 LET T5=T5*Z*Z/(4*R*(R+1))
358 LET V1=V1+T1*Z3
360 LET V2=V2+T1*Z4
362 LET V3=V3+T1*Z3*F1
364 LET V4=V4+T1*Z4*F1
366 LET V5=V5+T5*Z5
368 LET V7=V7+T5*(F1+F2)*Z5
370 LET V6=V6+T5*Z6
372 LET V8 =V8+T5*(F1+F2)*Z6
374 NEXTR
376 LET V3=V3-(0.577215665+LØG(Z/2))*V1+Ø*V2
378 LET V4=V4-(0.577215665+LØG(Z/2))*V2-Ø*V1
380 LETV7=-V7/2+CØS(Ø)/Z+(.577215665+LØG(Z/2))*V5-Ø*V6
382 LETV8=-V8/2-SIN(Ø)/Z+(.577215665+LØG(Z/2))*V6+Ø*V5
384 GØTØ468
386 LETF1=1
388 LETW7=1
390 LETW5=1
392 LET W3=1
394 LET W1=1
396 LETT2=1
398 LETT1=1
400 LET W2=0
402 LETW4=0
404 LETW6=0
```

```
406 LETW8=0
408 L5=3+20/Z
410 FØRR=1TØL5
412 LETF1=-F1
414 LET T2 =T2*(4-(2*R-1)*(2*R-1))/(8*R*Z)
416 LET T1=T1*(-(2*R-1)↑2)/(8*R*Z)
418 LET Z3=CØS(R*Ø)
420 LET Z4=SIN(R*Ø)
422 LET W1=W1+F1*T1*Z3
424 LET W2=W2-F1*T1*Z4
426 LET W3=W3+T1*Z3
428 LET W4=W4-T1*Z4
430 LET W5=W5+F1*T2*Z3
432 LET W6=W6-F1*T2*Z4
434 LET W7 =W7+T2*Z3
436 LET W8=W8-T2*Z4
438 NEXT R
440 LET Q9=.3989422804*EXP(Z*CØS(Ø))/SQR(Z)
442 LET Q5=Q9*(CØS(Z*SIN(Ø)-.5*Ø))
444 LET Q6=Q9*(SIN(Z*SIN(Ø)-.5*Ø))
446 LET Q9=1.253314137*EXP(-Z*CØS(Ø))/SQR(Z)
448 LET Q7=Q9*(CØS(-Z*SIN(Ø)-.5*Ø))
450 LET Q8=Q9*(SIN(-Z*SIN(Ø)-.5*Ø))
452 LET V5=W5*Q5-W6*Q6
454 LET V6=W6*Q5+W5*Q6
456 LET V7=W7*Q7-W8*Q8
458 LET V8=W8*Q7+W7*Q8
460 LET V1=W1*Q5-W2*Q6
462 LET V2=W1*Q6+W2*Q5
464 LET V3=W3*Q7-W4*Q8
466 LET V4=W3*Q8+W4*Q7
468 LETQ1=SQR(V1*V1+V2*V2)
470 LETQ2=ATN(V2/V1)
472 IFV1>ØTHEN476
474 LET Q2=Q2+PI
476 LETQ3=SQR(V3*V3+V4*V4)
478 LET Q4=ATN(V4/V3)
480 IFV3>ØTHEN484
482 LET Q4=Q4+PI
484 LETQ5=SQR(V5*V5+V6*V6)
486 LETQ6=ATN(V6/V5)
488 IFV5>ØTHEN492
490 LET Q6=Q6+PI
492 LETQ7=SQR(V7*V7+V8*V8)
494 LETQ8=ATN(V8/V7)
496 IFV7>ØTHEN500
498 LET Q8=Q8+PI
500 RETURN
502 LETQ3=ATN(Q2/Q1)
504 IFQ1>ØTHEN508
506 LET Q3=Q3+PI
508 RETURN
510END

READY
```

COIL INSIDE A TWO-CONDUCTOR TUBE

The case of a coil inside a two-conductor tube, shown in Fig. 13, is typical of a number of tubing inspection problems. If we take the conductivity of the outer conductor to be zero, the problem reduces to a coil inside a single tube. This type of coil is used with impedance-bridge instruments for many eddy-current tubing testers.

In this section, there are programs which calculate the normalized coil impedance (INNCO), the defect sensitivity factor for a defect in the inner material (INDFT), the defect sensitivity factor for a defect located at any point in a lattice in the inner material (INDFTL), and the defect sensitivity factor for a defect in the outer material (INDFB).

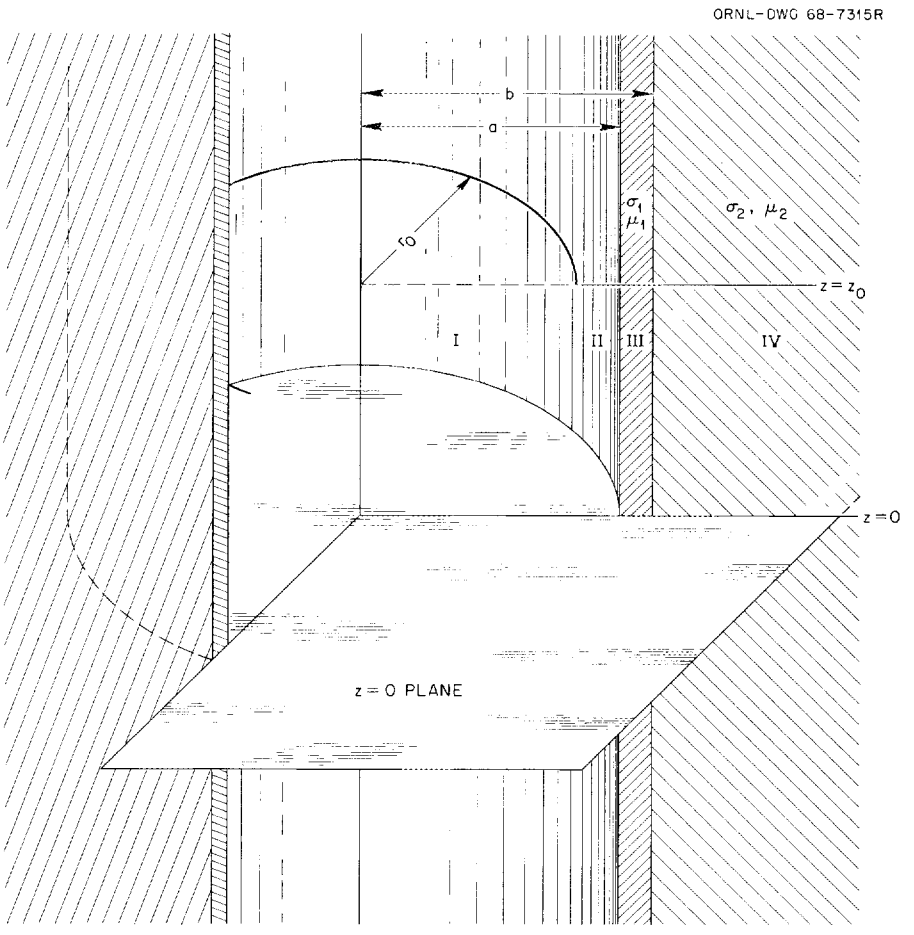

Fig. 13. A Coil of Rectangular Cross Section Inside a Two-Conductor Tube.

In addition the program, READIN, p. 177, can be applied to calculate the defect sensitivity factor for a differential coil system for a defect located at any point in a lattice.

Normalized Coil Impedance

Discussion of INNCO

This program is designed to calculate the normalized impedance of a coil with rectangular cross section coaxial with and inside a two-conductor tube of effectively infinite (three or four coil diameters) length. The wall thickness of the outer conductor is also effectively infinite as shown in Fig. 13. The conductors may have different permeabilities and electrical conductivities.

To use this program, one must first divide all dimensions by the mean radius of the coil. The results will, of course, be dimensionless and will be referred to as being "normalized." The product of the angular frequency of the driving current, the permeability, the conductivity, and the square of the mean radius of the coil must be calculated for each conductor. Let this product be denoted by $\omega\mu_1\sigma_1\overline{r}^2$ for the inner conductor and by $\omega\mu_2\sigma_2\overline{r}^2$ for the outer one.

Once these calculations have been made one need only type the following lines into the program. (Note: Parentheses are not typed.)

12 LET R1 = (numerical value of normalized inner coil radius)
14 LET R2 = (numerical value of normalized outer coil radius)
16 LET L1 = (numerical value of normalized distance between bottom of coil and Z = 0 plane)
18 LET L2 = (numerical value of normalized distance between top of coil and Z = 0 plane)
20 LET M1 = (numerical value of $\omega\mu_1\sigma_1\overline{r}^2$)

Note: If the conductivity of the inner conductor is zero, one must type two additional lines:

62 LET X1 = X
64 LET Y1 = 0

22 LET U1 = (numerical value of relative permeability of inner conductor)

24 LET M2 = (numerical value of $\omega\mu_2\sigma_2\bar{r}^2$)

Note: If the conductivity of the outer conductor is zero, one must type two additional lines:

58 LET X2 = X

60 LET Y2 = 0

26 LET U2 = (numerical value of relative permeability of outer conductor)

28 LET A = (numerical value of normalized radius of inner conductor)

30 LET B = (numerical value of normalized radius of outer conductor)

32 LET A9 = (normalization factor)

Note: This value may be obtained with the aid of AIRCO simply by placing the appropriate coil dimensions in that program.

The program may now be run.

The print-out by the computer will have the following format:

```
R1 = (R1)          R2 = (R2)          L1 = (L1)          L2 = (L2)
INN RAD = (A)      OUT RAD = (B)      AIR VALUE = (A9)
M1 = (M1)          U1 = (U1)          M2 = (M2)          U2 = (U2)
X                  AIR VALUE          REAL PART          IMAG PART
1                   ------             ------             ------
2                   ------             ------             ------
3                   ------             ------             ------
4                   ------             ------             ------
5                   ------             ------             ------
6                   ------             ------             ------
7                   ------             ------             ------
8                   ------             ------             ------
9                   ------             ------             ------
10                  ------             ------             ------
11                  ------             ------             ------
12                  ------             ------             ------
13                  ------             ------             ------
14                  ------             ------             ------
15                  ------             ------             ------
NORMALIZED IMAG PART ------     NORMALIZED REAL PART ------
```

The various symbols enclosed in parentheses are used here to indicate that the numerical value of the symbol will be printed. The first column, headed "X," is the upper limit of the integration being performed

by the computer. The second column, headed "AIR VALUE," is the value of the integral in the absence of the two-conductor rod, while the remaining two columns are the real and imaginary parts of the integral in the presence of the conductors. These appear primarily to allow one to inspect the convergence of the integration. The last line is the normalized impedance of the coil in the presence of the two-conductor rod.

The example below is presented for additional aid to those who wish to use this program.

Sample Calculation of INNCO

Let us suppose that we wish to know the normalized impedance of a coil 0.155 in. long with inner and outer radii of 0.420 and 0.580 in., respectively, due to the presence of a coaxial two-conductor tube of effectively infinite (three or four coil diameters) length. The inner conductor is assumed to be copper with a radius of 0.600 in., while the outer conductor is assumed to be aluminum with a radius of 0.700 in. We shall assume the frequency of the driving current to be 1.25 kHz and the distance of the bottom of the coil from the Z = 0 plane to be 0.005 in.

First, we determine the mean coil radius to be 0.500 in., so that

Normalized inner coil radius = 0.420/0.500 = 0.84
Normalized outer coil radius = 0.580/0.500 = 1.16
Normalized distance from bottom of coil to Z = 0 plane = 0.01
Normalized distance from top of coil to Z = 0 plane = 0.32
Normalized radius of inner conductor = 0.600/0.500 = 1.2
Normalized radius of outer conductor = 0.700/0.500 = 1.4

Furthermore,

Angular frequency of driving current = $2\pi \times 1250$ sec^{-1}
Permeability of both conductors = $4\pi \times 10^{-7}$ h/m
Relative permeability of both conductors = 1
Conductivity of copper = 5.77×10^{7} mhos/m
Conductivity of aluminum = 2.86×10^{7} mhos/m

Thus,

$$\omega\mu_1\sigma_1\bar{r}^2 = 91.91$$
$$\omega\mu_2\sigma_2\bar{r}^2 = 45.48$$

At this point, one determines the normalization factor by placing the normalized coil dimensions in AIRCO and running that program. It is worth noting that the normalization factor is independent of all parameters excluding the coil dimensions. This factor is normalization factor 2 in the print-out of AIRCO and for the case in point is found to be 0.01011632. With the normalization factor in hand, the remaining procedure is quite simple.

The above information is now typed into the program as follows:

```
12 LET R1 = 0.84
14 LET R2 = 1.16
16 LET L1 = 0.01
18 LET L2 = 0.32
20 LET M1 = 91.91
22 LET U1 = 1
24 LET M2 = 45.48
26 LET U2 = 1
28 LET A = 1.2
30 LET B = 1.4
32 LET A9 = 0.1011632E-1
```

Execution of the program yields the following results:

```
R1 = .84              R2 = 1.16              L1 = .01              L2 = .32
INN RAD = 1.2         OUT RAD = 1.4          AIR VALUE = 1.01163E-2
M1 = 91.91            U1 = 1                 M2 = 45.48            U2 = 1
X                     AIR VALUE              REAL PART             IMAG PART
1.                   1.04034E-3            -1.32295E-3           -3.35516E-4
2.                   4.91628E-3             1.50431E-3           -5.92461E-4
3.                   7.69354E-3             3.85285E-3           -7.581E-4
4.                   8.02258E-3             4.00405E-3           -8.56243E-4
5.                   8.49571E-3             4.40202E-3           -9.11933E-4
6.                   9.28377E-3             5.15804E-3           -9.42622E-4
7.                   9.45269E-3             5.31326E-3           -9.5914E-4
8.                   9.56387E-3             5.4186E-3            -9.67865E-4
9.                   9.83787E-3             5.69011E-3           -9.72406E-4
10.                  9.91995E-3             5.77112E-3           -9.74744E-4
11.                  9.94553E-3             5.79624E-3           -9.75934E-4
12.                  1.00317E-2             5.88219E-3           -9.76533E-4
13.                  1.00638E-2             5.91423E-3           -9.7683E-4
14.                  1.00687E-2             5.91909E-3           -9.76973E-4
15.                  1.00888E-2             5.93917E-3           -9.7704E-4
NORMALIZED IMAG PART  .589809             NORMALIZED REAL PART  9.65806E-2
```

From this we see that the normalized impedance is $Z_n = 0.0965806 + j\ 0.589809$.

INNCO Program

```
10 REM              INNCØ            VERSIØN     10/20/70
12 LETR1=.84
14 LETR2=1.16
16LETL1=.01
18LETL2=.32
20LETM1=91.91
22LETU1=1
24LETM2=45.48
26LETU2=1
28LETA=1.2
30LETB=1.4
32LETA9=.1011632E-1
34PRINT"R1=";R1,"R2=";R2,"L1=";L1,"L2=";L2
36PRINT"INN RAD=";A,"ØUT RAD";B,"AIR VALUE=";A9
38PRINT"M1=";M1,"U1=";U1,"M2=";M2,"U2=";U2
40PRINT"X","AIR VALUE","REAL PART","IMAG PART"
42LETM7=0
44LETM8=0
46LETM9=0
48LETS1=1E-2
50LETS2=1
52LETB1=0
54LETB2=S2
56FØRX=B1+S1/2TØB2STEPS1
58LETX2=.707107*SQR(SQR(X*X*X*X+M2*M2)+X*X)
60LETY2=.707107*SQR(SQR(X*X*X*X+M2*M2)-X*X)
62LETX1=.707107*SQR(SQR(X*X*X*X+M1*M1)+X*X)
64LETY1=.707107*SQR(SQR(X*X*X*X+M1*M1)-X*X)
66LETZ1=SQR(X1*X1+Y1*Y1)
68LETØ1=ATN(Y1/X1)
70LETZ2=SQR(X2*X2+Y2*Y2)
72LET Ø2=ATN(Y2/X2)
74LETZ=A*X
76LETØ=0
78GØSUB308
80LETI1=Q1
82LETI2=Q5
84LETK2=Q7
86LETZ=A*Z1
88LETØ=Ø1
90GØSUB308
92LETI3=Q1
94LETJ3=Q2
96LETK3=Q3
98LETN3=Q4
100LETI4=Q5
102LETJ4=Q6
104LETK4=Q7
106LETN4=Q8
108LETZ=B*Z1
```

```
110LETØ=Ø1
112GØSUB308
114LETI5=Q1
116LETJ5=Q2
118LETK5=Q3
120LETN5=Q4
122LETI6=Q5
124LETJ6=Q6
126LETK6=Q7
128LETN6=Q8
130LETZ=B*Z2
132LETØ=Ø2
134GØSUB308
136LETK7=Q3
138LETN7=Q4
140LETK8=Q7
142LETN8=Q8
144LETQ1=X*I4*I1*CØS(J4)-Z1*I3*I2*CØS(Ø1+J3)/U1
146LETQ2=X*I4*I1*SIN(J4)-Z1*I3*I2*SIN(Ø1+J3)/U1
148LETD1=SQR(Q1*Q1+Q2*Q2)
150GØSUB498
152LETE1=Q3
154 LET Q1=-Z1*K5*K8*CØS(Ø1+N5+N8)/U1+Z2*K7*K6*CØS(Ø2+N7+N6)/U2
156 LET Q2=-Z1*K5*K8*SIN(Ø1+N5+N8)/U1+Z2*K7*K6*SIN(Ø2+N7+N6)/U2
158LETD2=SQR(Q1*Q1+Q2*Q2)
160GØSUB498
162LETE2=Q3
164 LET Q1=-Z2*K7*I6*CØS(Ø2+N7+J6)/U2-Z1*I5*K8*CØS(Ø1+J5+N8)/U1
166 LET Q2=-Z2*K7*I6*SIN(Ø2+N7+J6)/U2-Z1*I5*K8*SIN(Ø1+J5+N8)/U1
168LETD3=SQR(Q1*Q1+Q2*Q2)
170GØSUB498
172LETE3=Q3
174 LET Q1=X*K4*I1*CØS(N4)+Z1*K3*I2*CØS(Ø1+N3)/U1
176 LET Q2=X*K4*I1*SIN(N4)+Z1*K3*I2*SIN(Ø1+N3)/U1
178LETD4=SQR(Q1*Q1+Q2*Q2)
180GØSUB498
182LETE4=Q3
184LETQ1=D1*D2*CØS(E1+E2)+D3*D4*CØS(E3+E4)
186LETQ2=D1*D2*SIN(E1+E2)+D3*D4*SIN(E3+E4)
188LETD5=SQR(Q1*Q1+Q2*Q2)
190GØSUB498
192LETE5=Q3
194LETG1=(I4*D2*CØS(J4+E2-E5)+K4*D3*CØS(N4+E3-E5))/(D5*A*I2)-K2/I2
196LETG2=(I4*D2*SIN(J4+E2-E5)+K4*D3*SIN(N4+E3-E5))/(D5*A*I2)
198LETZ=R2*X
200LETQ1=R2
202GØSUB 260
204LETQ7=V1
206LETI2=V2
208LETZ=R1*X
210LETQ1=R1
212GØSUB 260
214LETQ8=V1
216LETI1=V2
218LETQ9=Q7-Q8
220LETS5=4*S1*(Q9*SIN(X*(L2-L1)/2))↑2
222LETA1=G1*S5
```

```
224LETA2=G2*S5
226LETI3=I2-I1
228LETS3=3.141592*X*I3*I3*S1
230LETA3=S3*((EXP(-X*(L2-L1))-1)/X+L2-L1)
232LETM7=M7+A1+A3
234LETM8=M8+A2
236LETM9=M9+A3
238NEXTX
240LETQ3=X+(S1)/2
242PRINTQ3,M9,M7,M8
244LETS1=5E-2
246LETB1=B1+S2
248LETB2=B2+S2
250IFX<14THEN56
252PRINT"NØRMALIZED IMAG PART";(A9-M9+M7)/A9,
254PRINT"NØRMALIZED REAL PART";-M8/A9
256PRINT
258GØTØ506
260 IF Z>5 THEN 286
262LETL5=20*(1-EXP(-Z/10))+4
264LETF1=Q1*Q1*Q1/2
266LETF2=1
268LETV1=F1/3
270LETV2=V1
272FØRR=1TØL5
274LETF1=F1*Z*Z/(4*R*(R+1))
276LETF2=-F2
278LETV1=V1+F1/(3+2*R)
280LETV2=V2+F2*F1/(3+2*R)
282NEXTR
284 GØ TØ 306
286 LET P1=(((-188.1357/Z+109.1142)/Z-23.79333)/Z+2.050931)/Z
288 LET P1=((P1-.1730503)/Z+.7034845)/Z-.064109E-3
290 LET P2=(((-5.817517/Z+2.105874)/Z-.6896196)/Z+.4952024)/Z
292 LET P2=(P2-.187344E-2)/Z+.7979095
294 LET P4=3.1415927
296 LET V2=(1-SQR(Z)*(P2*CØS(Z-P4/4)-P1*SIN(Z-P4/4)))/(X*X*X)
298 LET P3=(((1660.794/Z-1737.556)/Z+543.6694)/Z+11.81804)/Z
300 LET P3=(((P3-33.78366)/Z+5.108402)/Z-.6130935)/Z
302 LET P3=(P3-.3360836)/Z+.3987795
304 LETV1=P3*SQR(Z)*EXP(Z)/(X*X*X)
306RETURN
308 IFZ>8THEN382
310 LETL5=20*(1-EXP(-Z/10))+4
312 LET T1=1
314 LETT5=Z/2
316 LETV1=T1
318 LETV2=0
320 V3=0
322 V4=0
324 LETV5=T5*CØS(Ø)
326 LETV6=T5*SIN(Ø)
328 LETV7=V5
330 LETV8=V6
332 LETF1=0
334 LETF2=1
336 FØR R=1 TØ L5
```

```
338 LET Z3=CØS(2*R*Ø)
340 LET Z4=SIN(2*R*Ø)
342 LET Z5=CØS((2*R+1)*Ø)
344 LET Z6=SIN((2*R+1)*Ø)
346 LETF1=F1+1/R
348 LETF2=F2+1/(R+1)
350 LET T1=T1*Z*Z/(4*R*R)
352 LET T5=T5*Z*Z/(4*R*(R+1))
354 LET V1=V1+T1*Z3
356 LET V2=V2+T1*Z4
358 LET V3=V3+T1*Z3*F1
360 LET V4=V4+T1*Z4*F1
362 LET V5=V5+T5*Z5
364 LET V7=V7+T5*(F1+F2)*Z5
366 LET V6=V6+T5*Z6
368 LET V8 =V8+T5*(F1+F2)*Z6
370 NEXTR
372 LET V3=V3-(0.577215665+LØG(Z/2))*V1+Ø*V2
374 LET V4=V4-(0.577215665+LØG(Z/2))*V2-Ø*V1
376 LETV7=-V7/2+CØS(Ø)/Z+(.577215665+LØG(Z/2))*V5-Ø*V6
378 LETV8=-V8/2-SIN(Ø)/Z+(.577215665+LØG(Z/2))*V6+Ø*V5
380 GØTØ464
382 LETF1=1
384 LETW7=1
386 LETW5=1
388 LET W3=1
390 LET W1=1
392 LETT2=1
394 LETT1=1
396 LET W2=0
398 LETW4=0
400 LETW6=0
402 LETW8=0
404 L5=3+20/Z
406 FØRR=1TØL5
408 LETF1=-F1
410 LET T2 =T2*(4-(2*R-1)*(2*R-1))/(8*R*Z)
412 LET T1=T1*(-(2*R-1)↑2)/(8*R*Z)
414 LET Z3=CØS(R*Ø)
416 LET Z4=SIN(R*Ø)
418 LET W1=W1+F1*T1*Z3
420 LET W2=W2-F1*T1*Z4
422 LET W3=W3+T1*Z3
424 LET W4=W4-T1*Z4
426 LET W5=W5+F1*T2*Z3
428 LET W6=W6-F1*T2*Z4
430 LET W7 =W7+T2*Z3
432 LET W8=W8-T2*Z4
434 NEXT R
436 LET Q9=.3989422804*EXP(Z*CØS(Ø))/SQR(Z)
438 LET Q5=Q9*(CØS(Z*SIN(Ø)-.5*Ø))
440 LET Q6=Q9*(SIN(Z*SIN(Ø)-.5*Ø))
442 LET Q9=1.253314137*EXP(-Z*CØS(Ø))/SQR(Z)
444 LET Q7=Q9*(CØS(-Z*SIN(Ø)-.5*Ø))
446 LET Q8=Q9*(SIN(-Z*SIN(Ø)-.5*Ø))
448 LET V5=W5*Q5-W6*Q6
450 LET V6=W6*Q5+W5*Q6
```

```
452 LET V7=W7*Q7-W8*Q8
454 LET V8=W8*Q7+W7*Q8
456 LET V1=W1*Q5-W2*Q6
458 LET V2=W1*Q6+W2*Q5
460 LET V3=W3*Q7-W4*Q8
462 LET V4=W3*Q8+W4*Q7
464 LETQ1=SQR(V1*V1+V2*V2)
466 LETQ2=ATN(V2/V1)
468 IFV1>0THEN472
470 LETQ2=Q2+3.1415927
472 LETQ3=SQR(V3*V3+V4*V4)
474 LETQ4=ATN(V4/V3)
476 IFV3>0THEN480
478 LETQ4=Q4+3.1415927
480 LETQ5=SQR(V5*V5+V6*V6)
482 LETQ6=ATN(V6/V5)
484 IFV5>0THEN488
486 LETQ6=Q6+3.1415927
488 LETQ7=SQR(V7*V7+V8*V8)
490 LETQ8=ATN(V8/V7)
492 IFV7>0THEN496
494 LETQ8=Q8+3.1415927
496 RETURN
498 LETQ3=ATN(Q2/Q1)
500 IFQ1>0THEN504
502 LETQ3=Q3+3.1415927
504 RETURN
506END

READY
```

Defect Sensitivity Factor for a Defect in the Inner Material

Discussion of INDFT

This program is designed to calculate the defect sensitivity factor for a coil with rectangular cross section coaxial with and inside a two-conductor tube of effectively infinite (three or four coil diameters) length. The wall thickness of the outer conductor is also effectively infinite. For this program, the defect must be in the inner conductor which is labeled III in Fig. 13, p. 188. The conductors may have different electrical conductivities.

To use this program, one must first divide all dimensions by the mean radius of the coil. The results will, of course, be dimensionless and will be referred to as being "normalized." The product of the angular frequency of the driving current, the permeability, the conductivity, and the square of the mean radius of the coil must be calculated for each

conductor. Let this product be denoted by $\omega\mu_1\sigma_1\overline{r}^2$ for the inner conductor and by $\omega\mu_2\sigma_2\overline{r}^2$ for the outer one.

Once these calculations have been made, one need only type the following lines into the program. (Note: Parentheses are not typed.)

12 LET R1 = (numerical value of normalized inner coil radius)

14 LET R2 = (numerical value of normalized outer coil radius)

16 LET L1 = (numerical value of normalized distance between bottom of coil and Z = 0 plane)

18 LET L2 = (numerical value of normalized distance between top of coil and Z = 0 plane)

20 LET M1 = (numerical value of $\omega\mu_1\sigma_1\overline{r}^2$)

22 LET M2 = (numerical value of $\omega\mu_2\sigma_2\overline{r}^2$)

Note: If the conductivity of the outer conductor is zero, one must type two additional lines.

60 LET X2 = X

62 LET Y2 = 0

24 LET A = (numerical value of normalized radius of inner conductor)

26 LET B = (numerical value of normalized radius of outer conductor)

Note: This value may be obtained with the aid of AIRCO simply by placing the appropriate coil dimensions in that program.

28 LET A9 = (normalization factor)

30 LET R9 = (numerical value of normalized radius of r position coordinate of defect)

32 LET Z9 = (numerical value of normalized radius of z position coordinate of defect)

The program may now be run.

The print-out by the computer will have the following format:

```
R1 = (R1)          R2 = (R2)          L1 = (L1)          L2 = (L2)
INN RAD = (A)      OUT RAD = (B)      AIR VALUE = (A9)
M1 = (M1)                             M2 = (M2)
DEFECT POSITION IS                    R = (R9)           Z = (Z9)
X                  MAGNITUDE          PHASE
1                   ------             ------
5                   ------             ------
10                  ------             ------
15                  ------             ------
20                  ------             ------
25                  ------             ------
```

The various symbols enclosed in parentheses are used here to indicate that the numerical value of the symbol will be printed. The first column, headed "X," is the upper limit of the integration being performed by the computer. The other two columns have self-explanatory headings and appear principally to allow one to inspect the convergence of the integration. The magnitude and phase values for X = 25 are considered to be correct since the integration in most cases converges sufficiently well for this value of X.

The example below is presented for additional aid to those who wish to use this program.

Sample Calculation of INDFT

Let us suppose that we wish to know the defect sensitivity factor for a coil 0.155 in. long with inner and outer radii of 0.420 and 0.580 in., respectively, coaxial with and inside a two-conductor tube of effectively infinite (three or four coil diameters) length. The inner conductor is assumed to be copper with a radius of 0.600 in., while the outer conductor is assumed to be aluminum with a radius of 0.700 in. Let us further suppose that we are interested in the defect sensitivity factor for the case in which the defect is located 0.650 in. from the axis and 0.0825 in. above the Z = 0 plane. We shall assume the frequency of the driving current to be 1.25 kHz and the distance of the bottom of the coil from the Z = 0 plane to be 0.005 in.

First, we determine the mean coil radius to be 0.500 in., so that

Normalized inner coil radius = 0.420/0.500 = 0.84
Normalized outer coil radius = 0.580/0.500 = 1.16
Normalized distance from bottom of coil to Z = 0 plane = 0.01
Normalized distance from top of coil to Z = 0 plane = 0.32
Normalized radius of inner conductor = 0.600/0.500 = 1.2
Normalized radius of outer conductor = 0.700/0.500 = 1.4
Normalized r position of defect = 0.650/0.500 = 1.3
Normalized z position of defect = 0.0825/0.500 = 0.165

Furthermore,

Angular frequency of driving current = $2\pi \times 1250$ sec^{-1}
Permeability of both conductors = $4\pi \times 10^{-7}$ h/m

Conductivity of copper = 5.77×10^7 mhos/m

Conductivity of aluminum = 2.86×10^7 mhos/m

Thus,

$$\omega\mu_1\sigma_1\bar{r}^2 = 91.91$$
$$\omega\mu_2\sigma_2\bar{r}^2 = 45.48$$

At this point one determines the normalization factor by placing the normalized coil dimensions in AIRCO and running that program. It is worth noting that the normalization factor is independent of all parameters excluding the coil dimensions. This factor is normalization factor 2 in the print-out of AIRCO and for the case in point is found to be 0.01011632. With the normalization factor in hand, the remaining procedure is quite simple.

The above information is now typed into the program as follows:

```
12 LET R1 = 0.84
14 LET R2 = 1.16
16 LET L1 = 0.01
18 LET L2 = 0.32
20 LET M1 = 91.91
22 LET M2 = 45.48
24 LET A = 1.2
26 LET B = 1.4
28 LET A9 = 0.1011632E-1
30 LET R9 = 1.3
32 LET Z9 = 0.165
```

Execution of the program yields the following results:

```
R1 = .84          R2 = 1.16          L1 = .01          L2 = .32
INN RAD = 1.2     OUT RAD = 1.4      AIR VALUE = 1.01163E-2
M1 = 91.91                           M2 = 45.48
DEFECT POSITION IS                   R = 1.3           Z = .165
X                 MAGNITUDE          PHASE
1.                6.84521E-3        -2.83022
5.                8.32674E-2        -2.62241
10.               .123555           -2.46001
15.               .129339           -2.42232
20.               .129826           -2.41805
25.               .129775           -2.41861
```

From this we see that the defect sensitivity factor is $0.129775\ e^{-j2.41861}$.

To obtain the change in normalized impedance, we multiply the defect sensitivity factor by the product of the defect volume and the shape and orientation factor. Note that the defect volume must be calculated from dimensions which are normalized by the mean radius of the coil.

INDFT Program

```
10 REM                INDFT            VERSIØN     10/20/70
12 LET R1=.84
14 LET R2=1.16
16 LET L1=.01
18 LET L2=.32
20 LET M1=91.91
22 LET M2=45.48
24 LET A=1.2
26 LET B=1.4
28 LET A9=.1011632E-1
30 LET R9=1.3
32 LET Z9=.165
34PRINT"R1=";R1,"R2=";R2,"L1=";L1,"L2=";L2
36PRINT"INN RAD=";A,"ØUT RAD=";B,"AIR VALUE=";A9
38PRINT"M1=";M1," ","M2=";M2
40PRINT"DEFECT PØSITIØN IS","R=";R9,"Z=";Z9
42PRINT"X","MAGNITUDE","PHASE"
44LETM7=0
46LETM8=0
48LETM9=0
50LETS1=1E-2
52LETS2=1
54LETB1=0
56LETB2=S2
58FØRX=B1+S1/2TØB2STEPS1
60LETX2=.707107*SQR(SQR(X*X*X*X+M2*M2)+X*X)
62LETY2=.707107*SQR(SQR(X*X*X*X+M2*M2)-X*X)
64LETX1=.707107*SQR(SQR(X*X*X*X+M1*M1)+X*X)
66LETY1=.707107*SQR(SQR(X*X*X*X+M1*M1)-X*X)
68LETZ1=SQR(X1*X1+Y1*Y1)
70LETØ1=ATN(Y1/X1)
72LETZ2=SQR(X2*X2+Y2*Y2)
74LET Ø2=ATN(Y2/X2)
76LETZ=A*X
78LETØ=0
80GØSUB300
82LETI1=Q1
84LETI2=Q5
86LETK2=Q7
```

```
88LETZ=A*Z1
90LETØ=Ø1
92GØSUB300
94LETI3=Q1
96LETJ3=Q2
98LETK3=Q3
100LETN3=Q4
102LETI4=Q5
104LETJ4=Q6
106LETK4=Q7
108LETN4=Q8
110LETZ=B*Z1
112LETØ=Ø1
114GØSUB300
116LETI5=Q1
118LETJ5=Q2
120LETK5=Q3
122LETN5=Q4
124LETI6=Q5
126LETJ6=Q6
128LETK6=Q7
130LETN6=Q8
132LETZ=B*Z2
134LETØ=Ø2
136GØSUB300
138LETK7=Q3
140LETN7=Q4
142LETK8=Q7
144LETN8=Q8
146LETZ=R9*Z1
148LETØ=Ø1
150GØSUB300
152LETI9=Q5
154LETJ9=Q6
156LETK9=Q7
158LETN9=Q8
160LETQ1=X*I4*I1*CØS(J4)-Z1*I3*I2*CØS(Ø1+J3)
162LETQ2=X*I4*I1*SIN(J4)-Z1*I3*I2*SIN(Ø1+J3)
164LETD1=SQR(Q1*Q1+Q2*Q2)
166 GØSUB490
168LETE1=Q3
170 LET Q1=-Z1*K5*K8*CØS(Ø1+N5+N8)+Z2*K7*K6*CØS(Ø2+N7+N6)
172 LET Q2=-Z1*K5*K8*SIN(Ø1+N5+N8)+Z2*K7*K6*SIN(Ø2+N7+N6)
174LETD2=SQR(Q1*Q1+Q2*Q2)
176 GØSUB490
178LETE2=Q3
180 LET Q1=-Z2*K7*I6*CØS(Ø2+N7+J6)-Z1*I5*K8*CØS(Ø1+J5+N8)
182 LET Q2=-Z2*K7*I5*SIN(Ø2+N7+J6)-Z1*I5*K8*SIN(Ø1+J5+N8)
184LETD3=SQR(Q1*Q1+Q2*Q2)
186 GØSUB490
188LETE3=Q3
190 LET Q1=X*K4*I1*CØS(N4)+Z1*K3*I2*CØS(Ø1+N3)
```

```
192 LET Q2=X*K4*I1*SIN(N4)+Z1*K3*I2*SIN(Ø1+N3)
194LETD4=SQR(Q1*Q1+Q2*Q2)
196 GØSUB490
198LETE4=Q3
200LETQ1=D1*D2*CØS(E1+E2)+D3*D4*CØS(E3+E4)
202LETQ2=D1*D2*SIN(E1+E2)+D3*D4*SIN(E3+E4)
204LETD5=SQR(Q1*Q1+Q2*Q2)
206GØSUB490
208LETE5=Q3
210LETG1=(I9*D2*CØS(J9+E2-E5)+K9*D3*CØS(N9+E3-E5))/(A*D5)
212LETG2=(I9*D2*SIN(J9+E2-E5)+K9*D3*SIN(N9+E3-E5))/(A*D5)
214LETZ=R2*X
216LETQ1=R2
218GØSUB 272
220LETQ7=V1
222LETZ=R1*X
224LETQ1=R1
226GØSUB 272
228LETQ8=V1
230LETQ9=Q7-Q8
232LETS5=S1*Q9*(SIN(X*(Z9-L1))-SIN(X*(Z9-L2)))
234LETM7=M7+G1*S5
236LETM8=M8+G2*S5
238NEXTX
240LETM9=ATN(M8/M7)
242IFM7>ØTHEN246
244LETM9=M9+3.1415927
246LETN9=(3*M1)/(4*9.8696044*A9)
248PRINTX+S1/2,N9*(M7*M7+M8*M8),2*M9
250LETS1=5E-2
252IFX>4.5THEN260
254LETB1=1
256LETB2=5
258GØTØ58
260LETS2=5
262LETB1=B2
264LETB2=B2+S2
266IFX<24.5THEN58
268PRINT
270 GØTØ498
272IFZ>3THEN290
274LETL5=20*(1-EXP(-Z/10))+4
276LETF1=Q1*Q1*Q1/2
278LETV1=F1/3
280FØRR=1TØL5
282LETF1=F1*Z*Z/(4*R*(R+1))
284LETV1=V1+F1/(3+2*R)
286NEXTR
288 GØ TØ 298
290LETP3=(((1660.794/Z-1737.556)/Z+543.6694)/Z+11.81804)/Z
292LETP3=(((P3-33.78366)/Z+5.108402)/Z-.6130935)/Z
294LETP3=(P3-.3360836)/Z+.3987795
```

```
296 LETV1=P3*SQR(Z)*EXP(Z)/(X*X*X)
298RETURN
300 IFZ>8THEN374
302 LETL5=20*(1-EXP(-Z/10))+4
304 LET T1=1
306 LETT5=Z/2
308 LETV1=T1
310 LETV2=0
312 V3=0
314 V4=0
316 LETV5=T5*CØS(Ø)
318 LETV6=T5*SIN(Ø)
320 LETV7=V5
322 LETV8=V6
324 LETF1=0
326 LETF2=1
328 FØR R=1 TØ L5
330 LET Z3=CØS(2*R*Ø)
332 LET Z4=SIN(2*R*Ø)
334 LET Z5=CØS((2*R+1)*Ø)
336 LET Z6=SIN((2*R+1)*Ø)
338 LETF1=F1+1/R
340 LETF2=F2+1/(R+1)
342 LET T1=T1*Z*Z/(4*R*R)
344 LET T5=T5*Z*Z/(4*R*(R+1))
346 LET V1=V1+T1*Z3
348 LET V2=V2+T1*Z4
350 LET V3=V3+T1*Z3*F1
352 LET V4=V4+T1*Z4*F1
354 LET V5=V5+T5*Z5
356 LET V7=V7+T5*(F1+F2)*Z5
358 LET V6=V6+T5*Z6
360 LET V8 =V8+T5*(F1+F2)*Z6
362 NEXTR
364 LET V3=V3-(0.577215665+LØG(Z/2))*V1+Ø*V2
366 LET V4=V4-(0.577215665+LØG(Z/2))*V2-Ø*V1
368 LETV7=-V7/2+CØS(Ø)/Z+(.577215665+LØG(Z/2))*V5-Ø*V6
370 LETV8=-V8/2-SIN(Ø)/Z+(.577215665+LØG(Z/2))*V6+Ø*V5
372 GØTØ456
374 LETF1=1
376 LETW7=1
378 LETW5=1
380 LET W3=1
382 LET W1=1
384 LETT2=1
386 LETT1=1
388 LET W2=0
390 LETW4=0
392 LETW6=0
394 LETW8=0
396 L5=3+20/Z
398 FØRR=1TØL5
```

```
400 LETF1=-F1
402 LET T2 =T2*(4-(2*R-1)*(2*R-1))/(8*R*Z)
404 LET T1=T1*(-(2*R-1)↑2)/(8*R*Z)
406 LET Z3=CØS(R*Ø)
408 LET Z4=SIN(R*Ø)
410 LET W1=W1+F1*T1*Z3
412 LET W2=W2-F1*T1*Z4
414 LET W3=W3+T1*Z3
416 LET W4=W4-T1*Z4
418 LET W5=W5+F1*T2*Z3
420 LET W6=W6-F1*T2*Z4
422 LET W7 =W7+T2*Z3
424 LET W8=W8-T2*Z4
426 NEXT R
428 LET Q9=.3989422804*EXP(Z*CØS(Ø))/SQR(Z)
430 LET Q5=Q9*(CØS(Z*SIN(Ø)-.5*Ø))
432 LET Q6=Q9*(SIN(Z*SIN(Ø)-.5*Ø))
434 LET Q9=1.253314137*EXP(-Z*CØS(Ø))/SQR(Z)
436 LET Q7=Q9*(CØS(-Z*SIN(Ø)-.5*Ø))
438 LET Q8=Q9*(SIN(-Z*SIN(Ø)-.5*Ø))
440 LET V5=W5*Q5-W6*Q6
442 LET V6=W6*Q5+W5*Q6
444 LET V7=W7*Q7-W8*Q8
446 LET V8=W8*Q7+W7*Q8
448 LET V1=W1*Q5-W2*Q6
450 LET V2=W1*Q6+W2*Q5
452 LET V3=W3*Q7-W4*Q8
454 LET V4=W3*Q8+W4*Q7
456 LETQ1=SQR(V1*V1+V2*V2)
458 LETQ2=ATN(V2/V1)
460 IFV1>ØTHEN464
462 LETQ2=Q2+3.1415927
464 LETQ3=SQR(V3*V3+V4*V4)
466 LETQ4=ATN(V4/V3)
468 IFV3>ØTHEN472
470 LETQ4=Q4+3.1415927
472 LETQ5=SQR(V5*V5+V6*V6)
474 LETQ6=ATN(V6/V5)
476 IFV5>ØTHEN480
478 LETQ6=Q6+3.1415927
480 LETQ7=SQR(V7*V7+V8*V8)
482 LETQ8=ATN(V8/V7)
484 IFV7>ØTHEN488
486 LETQ8=Q8+3.1415927
488 RETURN
490 LETQ3=ATN(Q2/Q1)
492 IFQ1>ØTHEN496
494 LETQ3=Q3+3.1415927
496 RETURN
498END

READY
```

Defect Sensitivity Factor for a Lattice of Defects in the Inner Material

Discussion of INDFTL

This program is designed to calculate the defect sensitivity factor for a coil with rectangular cross section coaxial with and inside a two-conductor tube of effectively infinite (three or four coil diameters) length. The wall thickness of the outer conductor is also effectively infinite (three or four skin depths). For this program, the defect may be located at any one of a number of points on a lattice in the inner conductor, which is labeled III in Fig. 13, p. 188. The conductors may have different electrical conductivities.

Before proceeding further, it is worth noting that in the execution of this program the data generated by the computer are stored in a data block which is used as input data for another program. Since there exist BASIC compilers which do not have this capability, this program may or may not be executable, depending upon the compiler used. If the latter situation arises, one may delete the character :2: wherever it appears in the program, thus causing the data to be printed at the console; otherwise one may access the data by using the name :2:.

To use this program, one must first divide all dimensions by the mean radius of the core. The results will, of course, be dimensionless and will be referred to as being "normalized." The product of the angular frequency of the driving current, the permeability, the conductivity, and the square of the mean radius of the coil must be calculated for each conductor. Let this product be denoted by $\omega\mu_1\sigma_1\bar{r}^2$ for the inner conductor and by $\omega\mu_2\sigma_2\bar{r}^2$ for the outer one.

Once these calculations have been made, one must type the following lines into the program. (Note: Parentheses are not typed.)

```
12 LET R1 = (numerical value of normalized inner coil radius)
14 LET R2 = (numerical value of normalized outer coil radius)
16 LET L1 = (numerical value of normalized distance between bottom
            of coil and Z = 0 plane)
18 LET L2 = (numerical value of normalized distance between top of
            coil and Z = 0 plane)
```

20 LET M1 = (numerical value of $\omega\mu_1\sigma_1\overline{r}^2$)

22 LET M2 = (numerical value of $\omega\mu_2\sigma_2\overline{r}^2$)

Note: If the conductivity of the outer conductor is zero, one must type two additional lines:

76 LET X2 = X

78 LET Y2 = 0

24 LET A = (numerical value of normalized radius of inner conductor)

26 LET B = (numerical value of normalized radius of outer conductor)

28 LET A9 = (normalization factor)

Note: This value may be obtained with the aid of AIRCO simply by placing the appropriate coil dimensions in that program.

30 LET R9 = (numerical value of number of lattice spacings in the r direction)

32 LET Z9 = (numerical value of number of lattice spacings in the z direction)

34 LET Z8 = (numerical value of maximum normalized z position coordinate of defect)

Note: Neither R9 nor Z9 may exceed 15. The lattice spacing in the r direction is (B-Z)/R9, while it is Z8/Z9 in the z direction. In addition, Z8 is measured from the midplane of the coil.

After typing these lines, one need only create an empty data file using the name :2:; the program may then be run.

During the execution of this program, the integers which are less than or equal to 20 will be consecutively printed at the console. These appear as indications of how far the integration has proceeded. The data resulting from this program will have the following format:

```
(R1)          (R2)          (L1)          (L2)
(A)           (B)           (A9)
(M1)                        (M2)
(R9)          (Z9)          (Z8)
              (R(1))        (R(2))        **********    (R(R9))
(Z(1))        ------        ------        **********    ------
              ------        ------        **********    ------
(Z(2))        ------        ------        **********    ------
              ------        ------        **********    ------
   *            *             *             *             *
   *            *             *             *             *
   *            *             *             *             *
   *            *             *             *             *
(Z(Z9))       ------        ------        **********    ------
              ------        ------        **********    ------
```

The various symbols enclosed in parentheses are used here to indicate that the numerical value of the symbol will be printed. The upper value at each lattice point is the magnitude of the defect sensitivity factor, while the lower one is the phase of the defect sensitivity factor for the case in which the defect is located at the given lattice point. It should be noted that the lattice points for which R9 > 4 will be printed below the last line (i.e., the line containing Z/R9).

The following example is presented for additional aid to those who wish to use this program.

Sample Calculation of INDFTL

Let us suppose that we wish to know the defect sensitivity factor for the case of a coil 0.155 in. long with inner and outer radii of 0.420 and 0.580 in., respectively, coaxial with and inside a two-conductor tube of effectively infinite (three or four coil diameters) length. The inner conductor is assumed to be copper with a radius of 0.600 in., while the outer is assumed to be aluminum with a radius of 0.700 in. Let us further suppose that we are interested in the defect sensitivity factor for the cases in which the defect is located at any one of the points which lie within 1.000 in. of the midplane of the coil on a 4 × 2 lattice in the copper. We shall assume the frequency of the driving current to be 1.25 kHz and the distance of the bottom of the coil from the Z = 0 plane to be 0.005 in.

First, we determine the mean coil radius to be 0.500 in., so that

Normalized inner coil radius = 0.420/0.500 = 0.84
Normalized outer coil radius = 0.580/0.500 = 1.16
Normalized distance from bottom of coil to Z = 0 plane = 0.01
Normalized distance from top of coil to Z = 0 plane = 0.32
Normalized radius of inner conductor = 0.600/0.500 = 1.2
Normalized radius of outer conductor = 0.400/0.500 = 1.4
Number of r lattice spacings = 4
Number of z lattice spacings = 2
Maximum normalized z coordinate of defect = 1.000/0.500 = 2

Furthermore,

Angular frequency of driving current = $2\pi \times 1250\ \mathrm{sec}^{-1}$
Permeability of both conductors = $4\pi \times 10^{-7}$ h/m
Conductivity of copper = 5.77×10^{7} mhos/m
Conductivity of aluminum = 2.86×10^{7} mhos/m

Thus,

$\omega\mu_1\sigma_1\bar{r}^2 = 91.91$
$\omega\mu_2\sigma_2\bar{r}^2 = 45.48$

At this point one determines the normalization factor by placing the normalized coil dimensions in AIRCO and running that program. It is worth noting that the normalization factor is independent of all parameters excluding the coil dimensions. This factor is normalization factor 2 in the print-out of AIRCO and for the case in point is found to be 0.01011632. With the normalization factor in hand, the remaining procedure is quite simple.

The above information is now typed into the program as follows:

```
12 LET R1 = 0.84
14 LET R2 = 1.16
16 LET L1 = 0.01
18 LET L2 = 0.32
20 LET M1 = 91.91
22 LET M2 = 45.48
```

```
24 LET A = 1.2
26 LET B = 1.4
28 LET A9 = 0.1011632E-1
30 LET R9 = 4
32 LET Z9 = 2
34 LET Z8 = 2
```

An empty data file is now created and the program run with the following results:

.84	1.16	.01	.32	
1.2	1.4	1.01163E-2		
91.91		45.48		
4	2	2		
	1.225	1.275	1.325	1.375
-.335	1.73148E-2	9.57992E-3	5.7352E-3	3.73408E-3
	-2.23563	-3.00254	8.81929	8.17699
-1.335	1.83913E-5	9.43342E-6	5.13913E-6	3.04802E-6
	-2.70347	9.11392	8.35868	7.66988

From this, we see that for the case of a defect located at R = 1.325, Z = -1.335 the defect sensitivity factor is $5.13913 \times 10^{-6}\ e^{j8.35868}$.

To obtain the change in normalized impedance, we multiply the defect sensitivity factor by the product of the defect volume and the shape and orientation factor. Note that the defect volume must be calculated from dimensions which are normalized by the mean radius of the coil.

INDFTL Program

```
10 REM              INDFTL            VERSIØN     10/20/70
12 LET R1=.84
14 LET R2=1.16
16 LET L1=.01
18 LET L2=.32
20 LET M1=91.91
22 LET M2=45.48
24 LET A=1.2
26 LET B=1.4
28 LET A9=.1011632E-1
30 LET R9=4
32 LET Z9=2
34 LET Z8=2
36DIMM(18,18),I(18,18),P(18,18),R(18),Z(18)
38PRINT:2:R1,R2,L1,L2
40PRINT:2:A,B,A9
42PRINT:2:M1," ",M2
```

```
44PRINT:2:R9,Z9,Z8
46PRINT:2:
48 PRINT "  A PRØGRAM IS NØW RUNNING. PLEASE DØ NØT DISCØNNECT!!!"
50PRINT
52FØRI=1TØZ9
54FØRJ=1TØR9
56LETM(I,J)=0
58LETI(I,J)=0
60NEXTJ
62NEXTI
64LETS1=1E-2
66LETS2=1
68LETB1=0
70LETB2=S2
72FØRX=B1+S1/2TØB2STEPS1
74LETX2=.707107*SQR(SQR(X*X*X*X+M2*M2)+X*X)
76LETY2=.707107*SQR(SQR(X*X*X*X+M2*M2)-X*X)
78LETX1=.707107*SQR(SQR(X*X*X*X+M1*M1)+X*X)
80LETY1=.707107*SQR(SQR(X*X*X*X+M1*M1)-X*X)
82LETZ1=SQR(X1*X1+Y1*Y1)
84LETØ1=ATN(Y1/X1)
86LETZ2=SQR(X2*X2+Y2*Y2)
88LETØ2=ATN(Y2/X2)
90LETZ=A*X
92LETØ=0
94GØSUB406
96LETI1=Q1
98LETI2=Q5
100LETK2=Q7
102LETZ=A*Z1
104LETØ=Ø1
106GØSUB406
108LETI3=Q1
110LETJ3=Q2
112LETK3=Q3
114LETN3=Q4
116LETI4=Q5
118LETJ4=Q6
120LETK4=Q7
122LETN4=Q8
124LETZ=B*Z1
126LETØ=Ø1
128GØSUB406
130LETI5=Q1
132LETJ5=Q2
134LETK5=Q3
136LETN5=Q4
138LETI6=Q5
140LETJ6=Q6
142LETK6=Q7
144LETN6=Q8
146LETZ=B*Z2
148LETØ=Ø2
150GØSUB406
152LETK7=Q3
154LETN7=Q4
156LETK8=Q7
```

```
158LETN8=Q8
160LETQ1=X*I4*I1*CØS(J4)-Z1*I3*I2*CØS(Ø1+J3)
162LETQ2=X*I4*I1*SIN(J4)-Z1*I3*I2*SIN(Ø1+J3)
164LETD1=SQR(Q1*Q1+Q2*Q2)
166GØSUB596
168LETE1=Q3
170 LET Q1=-Z1*K5*K8*CØS(Ø1+N5+N8)+Z2*K7*K6*CØS(Ø2+N7+N6)
172 LET Q2=-Z1*K5*K8*SIN(Ø1+N5+N8)+Z2*K7*K6*SIN(Ø2+N7+N6)
174LETD2=SQR(Q1*Q1+Q2*Q2)
176GØSUB596
178LETE2=Q3
180 LET Q1=-Z2*K7*I6*CØS(Ø2+N7+J6)-Z1*I5*K8*CØS(Ø1+J5+N8)
182 LET Q2=-Z2*K7*I6*SIN(Ø2+N7+J6)-Z1*I5*K8*SIN(Ø1+J5+N8)
184LETD3=SQR(Q1*Q1+Q2*Q2)
186GØSUB596
188LETE3=Q3
190 LET Q1=X*K4*I1*CØS(N4)+Z1*K3*I2*CØS(Ø1+N3)
192 LET Q2=X*K4*I1*SIN(N4)+Z1*K3*I2*SIN(Ø1+N3)
194LETD4=SQR(Q1*Q1+Q2*Q2)
196GØSUB596
198LETE4=Q3
200LETQ1=D1*D2*CØS(E1+E2)+D3*D4*CØS(E3+E4)
202LETQ2=D1*D2*SIN(E1+E2)+D3*D4*SIN(E3+E4)
204LETD5=SQR(Q1*Q1+Q2*Q2)
206GØSUB596
208LETE5=Q3
210LETZ=R2*X
212LETQ1=R2
214GØSUB378
216LETQ7=V1
218LETZ=R1*X
220LETQ1=R1
222GØSUB378
224LETQ8=V1
226LETS6=Q7-Q8
228LETØ=Ø1
230FØRJ=1TØR9
232LETR(J)=A+(B-A)*(J-.5)/R9
234LETZ=Z1*R(J)
236GØSUB406
238LETI9=Q5
240LETJ9=Q6
242LETK9=Q7
244LETN9=Q8
246LETG1=(I9*D2*CØS(J9+E2-E5)+K9*D3*CØS(N9+E3-E5))/(A*D5)
248LETG2=(I9*D2*SIN(J9+E2-E5)+K9*D3*SIN(N9+E3-E5))/(A*D5)
250FØRI=1TØZ9
252LETZ(I)=(L1+L2)/2-(I-.5)*Z8/Z9
254LETS5=S1*S6*(SIN(X*(Z(I)-L1))-SIN(X*(Z(I)-L2)))
256LETM(I,J)=M(I,J)+G1*S5
258LETI(I,J)=I(I,J)+G2*S5
260NEXTI
262NEXTJ
264NEXTX
266PRINTX+S1/2,
268LETS1=5E-2
270LETB1=B1+S2
```

```
272LETB2=B2+S2
274IFX<19.5THEN72
276FØRI=1TØZ9
278FØRJ=1TØR9
280LETP(I,J)=2*ATN(I(I,J)/M(I,J))
282IFM(I,J)>ØTHEN286
284LETP(I,J)=P(I,J)+2*PI
286LETM(I,J)=M(I,J)*M(I,J)+I(I,J)*I(I,J)
288NEXTJ
290NEXTI
292LETQ=3*M1/(4*9.8696044*A9)
294PRINT:2:"",
296FØRJ=1TØ4
298PRINT:2:R(J),
300NEXTJ
302FØRI=1TØZ9
304PRINT:2:Z(I),
306FØRJ=1TØ4
308PRINT:2:Q*M(I,J),
310NEXTJ
312PRINT:2:"",
314FØRJ=1TØ4
316PRINT:2:P(I,J),
318NEXTJ
320PRINT:2:
322NEXTI
324IFR9<4.5THEN604
326FØRJ=5TØ9
328PRINT:2:R(J),
330NEXTJ
332FØRI=1TØZ9
334FØRJ=5TØ9
336PRINT:2:Q*M(I,J),
338NEXTJ
340FØRJ=5TØ9
342PRINT:2:P(I,J),
344NEXTJ
346PRINT:2:
348NEXTI
350IFR9<9.5THEN604
352FØRJ=10TØ14
354PRINT:2:R(J),
356NEXTJ
358FØRI=1TØZ9
360FØRJ=10TØ14
362PRINT:2:Q*M(I,J),
364NEXTJ
366FØRJ=10TØ14
368PRINT:2:P(I,J),
370NEXTJ
372PRINT:2:
374NEXTI
376IFR9<14.5THEN604
378IFZ>3THEN396
380LETL5=INT(20*(1-EXP(-Z/10))+4)
382LETF1=Q1*Q1*Q1/2
384LETV1=F1/3
```

```
386FØRR=1TØL5
388LETF1=F1*Z*Z/(4*R*(R+1))
390LETV1=V1+F1/(3+2*R)
392NEXTR
394GØTØ404
396LETP3=(((1660.794/Z-1737.556)/Z+543.6694)/Z+11.81804)/Z
398LETP3=(((P3-33.78366)/Z+5.108402)/Z-.6130935)/Z
400LETP3=(P3-.3360836)/Z+.3987795
402LETV1=P3*SQR(Z)*EXP(Z)/(X*X*X)
404RETURN
406 IFZ>8THEN480
408 LETL5=20*(1-EXP(-Z/10))+4
410 LET T1=1
412 LETT5=Z/2
414 LETV1=T1
416 LETV2=0
418 V3=0
420 V4=0
422 LETV5=T5*CØS(Ø)
424 LETV6=T5*SIN(Ø)
426 LETV7=V5
428 LETV8=V6
430 LETF1=0
432 LETF2=1
434 FØR R=1 TØ L5
436 LET Z3=CØS(2*R*Ø)
438 LET Z4=SIN(2*R*Ø)
440 LET Z5=CØS((2*R+1)*Ø)
442 LET Z6=SIN((2*R+1)*Ø)
444 LETF1=F1+1/R
446 LETF2=F2+1/(R+1)
448 LET T1=T1*Z*Z/(4*R*R)
450 LET T5=T5*Z*Z/(4*R*(R+1))
452 LET V1=V1+T1*Z3
454 LET V2=V2+T1*Z4
456 LET V3=V3+T1*Z3*F1
458 LET V4=V4+T1*Z4*F1
460 LET V5=V5+T5*Z5
462 LET V7=V7+T5*(F1+F2)*Z5
464 LET V6=V6+T5*Z6
466 LET V8 =V8+T5*(F1+F2)*Z6
468 NEXTR
470 LET V3=V3-(0.577215665+LØG(Z/2))*V1+Ø*V2
472 LET V4=V4-(0.577215665+LØG(Z/2))*V2-Ø*V1
474 LETV7=-V7/2+CØS(Ø)/Z+(.577215665+LØG(Z/2))*V5-Ø*V6
476 LETV8=-V8/2-SIN(Ø)/Z+(.577215665+LØG(Z/2))*V6+Ø*V5
478 GØTØ562
480 LETF1=1
482 LETW7=1
484 LETW5=1
486 LET W3=1
488 LET W1=1
490 LETT2=1
492 LETT1=1
494 LET W2=0
496 LETW4=0
498 LETW6=0
```

```
500 LETW8=0
502 L5=3+20/Z
504 FØRR=1TØL5
506 LETF1=-F1
508 LET T2 =T2*(4-(2*R-1)*(2*R-1))/(8*R*Z)
510 LET T1=T1*(-(2*R-1)↑2)/(8*R*Z)
512 LET Z3=CØS(R*Ø)
514 LET Z4=SIN(R*Ø)
516 LET W1=W1+F1*T1*Z3
518 LET W2=W2-F1*T1*Z4
520 LET W3=W3+T1*Z3
522 LET W4=W4-T1*Z4
524 LET W5=W5+F1*T2*Z3
526 LET W6=W6-F1*T2*Z4
528 LET W7 =W7+T2*Z3
530 LET W8=W8-T2*Z4
532 NEXT R
534 LET Q9=.3989422804*EXP(Z*CØS(Ø))/SQR(Z)
536 LET Q5=Q9*(CØS(Z*SIN(Ø)-.5*Ø))
538 LET Q6=Q9*(SIN(Z*SIN(Ø)-.5*Ø))
540 LET Q9=1.253314137*EXP(-Z*CØS(Ø))/SQR(Z)
542 LET Q7=Q9*(CØS(-Z*SIN(Ø)-.5*Ø))
544 LET Q8=Q9*(SIN(-Z*SIN(Ø)-.5*Ø))
546 LET V5=W5*Q5-W6*Q6
548 LET V6=W6*Q5+W5*Q6
550 LET V7=W7*Q7-W8*Q8
552 LET V8=W8*Q7+W7*Q8
554 LET V1=W1*Q5-W2*Q6
556 LET V2=W1*Q6+W2*Q5
558 LET V3=W3*Q7-W4*Q8
560 LET V4=W3*Q8+W4*Q7
562 LETQ1=SQR(V1*V1+V2*V2)
564 LETQ2=ATN(V2/V1)
566 IFV1>ØTHEN570
568 LETQ2=Q2+3.1415927
570 LETQ3=SQR(V3*V3+V4*V4)
572 LETQ4=ATN(V4/V3)
574 IFV3>ØTHEN578
576 LETQ4=Q4+3.1415927
578 LETQ5=SQR(V5*V5+V6*V6)
580 LETQ6=ATN(V6/V5)
582 IFV5>ØTHEN586
584 LETQ6=Q6+3.1415927
586 LETQ7=SQR(V7*V7+V8*V8)
588 LETQ8=ATN(V8/V7)
590 IFV7>ØTHEN594
592 LETQ8=Q8+3.1415927
594 RETURN
596 LETQ3=ATN(Q2/Q1)
598 IFQ1>ØTHEN602
600 LETQ3=Q3+3.1415927
602 RETURN
604END

READY
```

Defect Sensitivity Factor for a Defect in the Outer Material

Discussion of INDFB

This program is designed to calculate the defect sensitivity factor for a coil with rectangular cross section coaxial with and inside a two-conductor tube of effectively infinite (three or four coil diameters) length. The wall thickness of the outer conductor is also effectively infinite (three or four skin depths). For this program, the defect must be in the outer conductor which is labeled IV in Fig. 13, p. 188. The conductors may have different electrical conductivities.

To use this program, one must first divide all dimensions by the mean radius of the coil. The results will, of course, be dimensionless and will be referred to as being "normalized." The product of the angular frequency of the driving current, the permeability, the conductivity, and the square of the mean radius of the coil must be calculated for each conductor. Let this product be denoted by $\omega\mu_1\sigma_1\bar{r}^2$ for the inner conductor and by $\omega\mu_2\sigma_2\bar{r}^2$ for the outer one.

Once these calculations have been made, one need only type the following lines into the program. (Note: Parentheses are not typed.)

12 LET R1 = (numerical value of normalized inner coil radius)

14 LET R2 = (numerical value of normalized outer coil radius)

16 LET L1 = (numerical value of normalized distance between bottom of coil and Z = 0 plane)

18 LET L2 = (numerical value of normalized distance between top of coil and Z = 0 plane)

20 LET M1 = (numerical value of $\omega\mu_1\sigma_1\bar{r}^2$)

22 LET M2 = (numerical value of $\omega\mu_2\sigma_2\bar{r}^2$)

Note: If the conductivity of the inner conductor is zero, one must type two additional lines:

60 LET X1 = X

62 LET Y1 = 0

24 LET A = (numerical value of normalized radius of inner conductor)

26 LET B = (numerical value of normalized radius of outer conductor)

28 LET A9 = (normalization factor)

Note: This value may be obtained with the aid of AIRCO simply by placing the appropriate coil dimensions in that program.

30 LET R9 = (numerical value of normalized r position coordinate of defect)

32 LET Z9 = (numerical value of normalized z position coordinate of defect)

The program may now be run.

The print-out by the computer will have the following format:

```
R1 = (R1)          R2 = (R2)          L1 = (L1)          L2 = (L2)
INN RAD = (A)      OUT RAD = (B)      AIR VALUE = (A9)
M1 = (M1)                             M2 = (M2)
DEFECT POSITION IS                    R = (R9)           Z = (Z9)
X                  MAGNITUDE          PHASE
1                   ------            ------
5                   ------            ------
10                  ------            ------
15                  ------            ------
20                  ------            ------
25                  ------            ------
```

The various symbols enclosed in parentheses are used here to indicate that the numerical value of the symbol will be printed. The first column, headed "X," is the upper limit of the integration being performed by the computer. The other two columns have self-explanatory headings and appear chiefly to allow one to inspect the convergence of the integration. The magnitude and phase values for X = 25 are considered to be correct since the integration in most cases converges sufficiently well for this value of X.

The example below is presented for additional aid to those who wish to use this program.

Sample Calculation of INDFB

Let us suppose that we wish to know the defect sensitivity factor for a coil 0.155 in. long with inner and outer radii of 0.420 and 0.580 in., respectively, coaxial with and inside a two-conductor tube of effectively infinite (three or four coil diameters) length. The inner conductor is assumed to be copper with a radius of 0.600 in., while the

outer conductor is assumed to be aluminum with a radius of 0.700 in. Let us further suppose that we are interested in the defect sensitivity factor for the case in which the defect is located 0.750 in. from the axis and 0.0825 in. above the Z = 0 plane. We shall assume the frequency of the driving current to be 1.25 kHz and the distance of the bottom of the coil from the Z = 0 plane to be 0.005 in.

First, we determine the mean coil radius to be 0.500 in., so that

Normalized inner coil radius = 0.420/0.500 = 0.84
Normalized outer coil radius = 0.580/0.500 = 1.16
Normalized distance from bottom of coil to Z = 0 plane = 0.01
Normalized distance from top of coil to Z = 0 plane = 0.32
Normalized radius of inner conductor = 0.600/0.500 = 1.2
Normalized radius of outer conductor = 0.700/0.500 = 1.4
Normalized r position of defect = 0.750/0.500 = 1.5
Normalized z position of defect = 0.0825/0.500 = 0.165

Furthermore,

Angular frequency of driving current = $2\pi \times 1250\ \mathrm{sec}^{-1}$
Permeability of both conductors = $4\pi \times 10^{-7}$ h/m
Conductivity of copper = 5.77×10^{7} mhos/m
Conductivity of aluminum = 2.86×10^{7} mhos/m

Thus,

$$\omega\mu_1\sigma_1\bar{r}^2 = 91.91$$
$$\omega\mu_2\sigma_2\bar{r}^2 = 45.48$$

At this point one determines the normalization factor by placing the normalized coil dimensions in AIRCO and running that program. It is worth noting that the normalization factor is independent of all parameters excluding the coil dimensions. This factor is normalization factor 2 in the print-out of AIRCO and for the case in point is found to be 0.01011632. With the normalization factor in hand, the remaining procedure is quite simple.

The above information is now typed into the program as follows:

```
12 LET R1 = 0.84
14 LET R2 = 1.16
16 LET L1 = 0.01
18 LET L2 = 0.32
20 LET M1 = 91.91
22 LET M2 = 45.48
24 LET A = 1.2
26 LET B = 1.4
28 LET A9 = 0.1011632E-1
30 LET R9 = 1.5
32 LET Z9 = 0.165
```

Execution of the program yields the following results:

```
R1 = .84          R2 = 1.16          L1 = .01          L2 = .32
INN RAD = 1.2     OUT RAD = 1.4      AIR VALUE = 1.01163E-2
M1 = 91.91                           M2 = 45.48
DEFECT POSITION IS                   R = 1.5           Z = .165
X                 MAGNITUDE          PHASE
1                 3.87969E-4        7.52726
5                 4.14216E-3        7.82334
10                5.18987E-3        7.99527
15                5.22209E-3        8.01217
20                5.22224E-3        8.01287
25                5.22226E-3        8.01285
```

From this we see that the defect sensitivity factor is 5.22226×10^{-3} $e^{j8.01285}$

To obtain the change in normalized impedance, we multiply the defect sensitivity factor by the product of the defect volume and the shape and orientation factor. Note that the defect volume must be calculated from dimensions which are normalized by the mean radius of the coil.

INDFB Program

```
10 REM              INDFB            VERSIØN      10/20/70
12 LET R1=.84
14 LET R2=1.16
16 LET L1=.01
18 LET L2=.32
20 LET M1=91.91
```

```
22 LET M2=45.48
24 LET A=1.2
26 LET B=1.4
28 LET A9=.1011632E-1
30 LET R9=1.5
32 LET Z9=.165
34PRINT"R1=";R1,"R2=";R2,"L1=";L1,"L2=";L2
36PRINT"INNRAD=";A,"ØUT RAD=";B,"AIR VALUE=";A9
38PRINT"M1=";M1," ","M2=";M2
40PRINT"DEFECT PØSITIØN IS","R=";R9,"Z=";Z9
42PRINT"X","MAGNITUDE","PHASE"
44LETM7=0
46LETM8=0
48LETM9=0
50LETS1=1E-2
52LETS2=1
54LETB1=0
56LETB2=S2
58FØRX=B1+S1/2TØB2STEPS1
60LETX2=.707107*SQR(SQR(X*X*X*X+M2*M2)+X*X)
62LETY2=.707107*SQR(SQR(X*X*X*X+M2*M2)-X*X)
64LETX1=.707107*SQR(SQR(X*X*X*X+M1*M1)+X*X)
66LETY1=.707107*SQR(SQR(X*X*X*X+M1*M1)-X*X)
68LETZ1=SQR(X1*X1+Y1*Y1)
70LETØ1=ATN(Y1/X1)
72LETZ2=SQR(X2*X2+Y2*Y2)
74LET Ø2=ATN(Y2/X2)
76LETZ=A*X
78LETØ=0
80GØSUB296
82LETI1=Q1
84LETI2=Q5
86LETK2=Q7
88LETZ=A*Z1
90LETØ=Ø1
92GØSUB296
94LETI3=Q1
96LETJ3=Q2
98LETK3=Q3
100LETN3=Q4
102LETI4=Q5
104LETJ4=Q6
106LETK4=Q7
108LETN4=Q8
110LETZ=B*Z1
112LETØ=Ø1
114GØSUB296
116LETI5=Q1
118LETJ5=Q2
120LETK5=Q3
122LETN5=Q4
124LETI6=Q5
```

```
126LETJ6=Q6
128LETK6=Q7
130LETN6=Q8
132LETZ=B*Z2
134LETØ=Ø2
136GØSUB296
138LETK7=Q3
140LETN7=Q4
142LETK8=Q7
144LETN8=Q8
146 LETZ=R9*Z2
148 LETØ=Ø2
150 GØSUB296
152 LETK9=Q7
154 LETN9=Q8
156LETQ1=X*I4*I1*CØS(J4)-Z1*I3*I2*CØS(Ø1+J3)
158LETQ2=X*I4*I1*SIN(J4)-Z1*I3*I2*SIN(Ø1+J3)
160LETD1=SQR(Q1*Q1+Q2*Q2)
162GØSUB486
164LETE1=Q3
166 LET Q1=-Z1*K5*K8*CØS(Ø1+N5+N8)+Z2*K7*K6*CØS(Ø2+N7+N6)
168 LET Q2=-Z1*K5*K8*SIN(Ø1+N5+N8)+Z2*K7*K6*SIN(Ø2+N7+N6)
170LETD2=SQR(Q1*Q1+Q2*Q2)
172GØSUB486
174LETE2=Q3
176 LET Q1=-Z2*K7*I6*CØS(Ø2+N7+J6)-Z1*I5*K8*CØS(Ø1+J5+N8)
178 LET Q2=-Z2*K7*I6*SIN(Ø2+N7+J6)-Z1*I5*K8*SIN(Ø1+J5+N8)
180LETD3=SQR(Q1*Q1+Q2*Q2)
182GØSUB486
184LETE3=Q3
186 LET Q1=X*K4*I1*CØS(N4)+Z1*K3*I2*CØS(Ø1+N3)
188 LET Q2=X*K4*I1*SIN(N4)+Z1*K3*I2*SIN(Ø1+N3)
190LETD4=SQR(Q1*Q1+Q2*Q2)
192GØSUB486
194LETE4=Q3
196LETQ1=D1*D2*CØS(E1+E2)+D3*D4*CØS(E3+E4)
198LETQ2=D1*D2*SIN(E1+E2)+D3*D4*SIN(E3+E4)
200LETD5=SQR(Q1*Q1+Q2*Q2)
202GØSUB486
204LETE5=Q3
206LETG1=-(K9*CØS(N9-E5))/(A*B*D5)
208LETG2=-(K9*SIN(N9-E5))/(A*B*D5)
210LETZ=R2*X
212LETQ1=R2
214GØSUB 268
216LETQ7=V1
218LETZ=R1*X
220LETQ1=R1
222GØSUB 268
224LETQ8=V1
226LETQ9=Q7-Q8
228LETS5=S1*Q9*(SIN(X*(Z9-L1))-SIN(X*(Z9-L2)))
```

```
230LETM7=M7+G1*S5
232LETM8=M8+G2*S5
234NEXTX
236LETM9=ATN(M8/M7)
238IFM7>0THEN242
240LETM9=M9+3.1415927
242LETN9=(3*M2)/(4*9.8696044*A9)
244PRINTX+S1/2,N9*(M7*M7+M8*M8),2*M9
246LETS1=5E-2
248IFX>4.5THEN256
250LETB1=1
252LETB2=5
254GØTØ58
256LETS2=5
258LETB1=B2
260LETB2=B2+S2
262IFX<24.5THEN58
264PRINT
266 GØ TØ 494
268IFZ>3THEN286
270LETL5=20*(1-EXP(-Z/10))+4
272LETF1=01*01*01/2
274LETV1=F1/3
276FØRR=1TØL5
278LETF1=F1*Z*Z/(4*R*(R+1))
280LETV1=V1+F1/(3+2*R)
282NEXTR
284 GØ TØ 294
286LETP3=(((1660.794/Z-1737.556)/Z+543.6694)/Z+11.81804)/Z
288LETP3=(((P3-33.78366)/Z+5.108402)/Z-.6130935)/Z
290LETP3=(P3-.33608)/Z+.3987795
292 LETV1=P3*SQR(Z)*EXP(Z)/(X*X*X)
294RETURN
296 IFZ>8THEN370
298 LETL5=20*(1-EXP(-Z/10))+4
300 LET T1=1
302 LETT5=Z/2
304 LETV1=T1
306 LET V2=0
308 V3=0
310 V4=0
312 LETV5=T5*CØS(Ø)
314 LETV6=T5*SIN(Ø)
316 LETV7=V5
318 LETV8=V6
320 LETF1=0
322 LETF2=1
324 FØR R=1 TØ L5
326 LET Z3=CØS(2*R*Ø)
328 LET Z4=SIN(2*R*Ø)
330 LET Z5=CØS((2*R+1)*Ø)
332 LET Z6=SIN((2*R+1)*Ø)
```

```
334 LETF1=F1+1/R
336 LETF2=F2+1/(R+1)
338 LET T1=T1*Z*Z/(4*R*R)
340 LET T5=T5*Z*Z/(4*R*(R+1))
342 LET V1=V1+T1*Z3
344 LET V2=V2+T1*Z4
346 LET V3=V3+T1*Z3*F1
348 LET V4=V4+T1*Z4*F1
350 LET V5=V5+T5*Z5
352 LET V7=V7+T5*(F1+F2)*Z5
354 LET V6=V6+T5*Z6
356 LET V8 =V8+T5*(F1+F2)*Z6
358 NEXTR
360 LET V3=V3-(0.577215665+LØG(Z/2))*V1+Ø*V2
362 LET V4=V4-(0.577215665+LØG(Z/2))*V2-Ø*V1
364 LETV7=-V7/2+CØS(Ø)/Z+(.577215665+LØG(Z/2))*V5-Ø*V6
366 LETV8=-V8/2-SIN(Ø)/Z+(.577215665+LØG(Z/2))*V6+Ø*V5
368 GØTØ452
370 LETF1=1
372 LETW7=1
374 LETW5=1
376 LET W3=1
378 LET W1=1
380 LETT2=1
382 LETT1=1
384 LET W2=0
386 LETW4=0
388 LETW6=0
390 LETW8=0
392 L5=3+20/Z
394 FØRR=1TØL5
396 LETF1=-F1
398 LET T2 =T2*(4-(2*R-1)*(2*R-1))/(8*R*Z)
400 LET T1=T1*(-(2*R-1)↑2)/(8*R*Z)
402 LET Z3=CØS(R*Ø)
404 LET Z4=SIN(R*Ø)
406 LET W1=W1+F1*T1*Z3
408 LET W2=W2-F1*T1*Z4
410 LET W3=W3+T1*Z3
412 LET W4=W4-T1*Z4
414 LET W5=W5+F1*T2*Z3
416 LET W6=W6-F1*T2*Z4
418 LET W7 =W7+T2*Z3
420 LET W8=W8-T2*Z4
422 NEXT R
424 LET Q9=.3989422804*EXP(Z*CØS(Ø))/SQR(Z)
426 LET Q5=Q9*(CØS(Z*SIN(Ø)-.5*Ø))
428 LET Q6=Q9*(SIN(Z*SIN(Ø)-.5*Ø))
430 LET Q9=1.253314137*EXP(-Z*CØS(Ø))/SQR(Z)
432 LET Q7=Q9*(CØS(-Z*SIN(Ø)-.5*Ø))
434 LET Q8=Q9*(SIN(-Z*SIN(Ø)-.5*Ø))
436 LET V5=W5*Q5-W6*Q6
```

```
438 LET V6=W6*Q5+W5*Q6
440 LET V7=W7*Q7-W8*Q8
442 LET V8=W8*Q7+W7*Q8
444 LET V1=W1*Q5-W2*Q6
446 LET V2=W1*Q6+W2*Q5
448 LET V3=W3*Q7-W4*Q8
450 LET V4=W3*Q8+W4*Q7
452 LETQ1=SQR(V1*V1+V2*V2)
454 LETQ2=ATN(V2/V1)
456 IFV1>0THEN460
458 LETQ2=Q2+3.1415927
460 LETQ3=SQR(V3*V3+V4*V4)
462 LETQ4=ATN(V4/V3)
464 IFV3>0THEN468
466 LETQ4=Q4+3.1415927
468 LETQ5=SQR(V5*V5+V6*V6)
470 LETQ6=ATN(V6/V5)
472 IFV5>0THEN476
474 LETQ6=Q6+3.1415927
476 LETQ7=SQR(V7*V7+V8*V8)
478 LETQ8=ATN(V8/V7)
480 IFV7>0THEN484
482 LETQ8=Q8+3.1415927
484 RETURN
486 LETQ3=ATN(Q2/Q1)
488 IFQ1>0THEN492
490 LETQ3=Q3+3.1415927
492 RETURN
494END

READY
```

EDDY-CURRENT BRIDGE

A bridge circuit, used in many eddy-current instruments, is shown in Fig. 14. Suppose that the bridge is unbalanced slightly and that the magnitude and phase of the unbalance voltage are measured with both L1 and L2 in air. If probe coil L1 is now brought into the vicinity of a conductor, both the magnitude and phase of the unbalance voltage will change. This change may be used to measure permeability, conductivity, or clad thickness provided that the bridge can be made to ignore variations in any two of these quantities while measuring the third.

As an example of the use of the bridge, let us consider the problem of determining the permeability of a metal plate. Figure 15 is a plot of the real versus the imaginary part of the normalized impedance of a

ORNL-DWG 70-5238

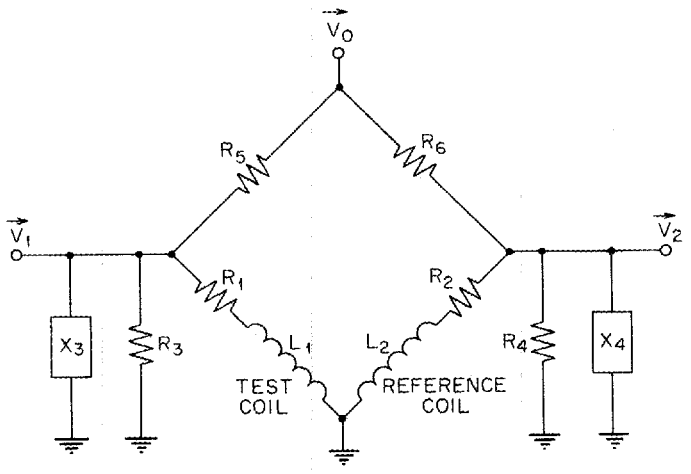

Fig. 14. A Typical Eddy-Current Bridge.

ORNL-DWG 70-5236R

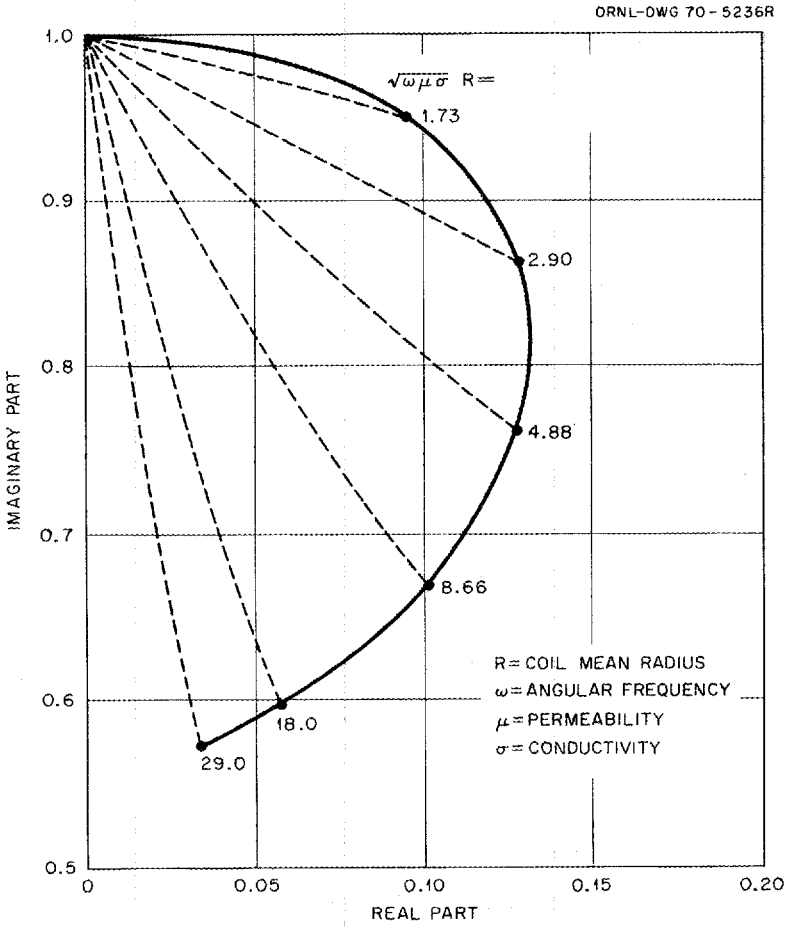

Fig. 15. Normalized Coil Impedance as a Function of M.

coil above the plate for a number of values of the parameter $M = \omega\mu\sigma\bar{r}^2$, where ω is the angular frequency of the driving current, μ the permeability, σ the conductivity, and $\bar{r}$ the mean coil radius in meters. For any point on the curve, a change in either frequency or conductivity will cause the point to move along the solid curve. The dashed lines indicate the variation with lift-off (i.e., a point originally on the solid curve will move along one of the dashed lines if the lift-off is varied). Note that in the region of the curve for small values of M, the variation with lift-off is approximately parallel to the variation with conductivity. This is a desirable effect, since we wish to make the variation due to all the unwanted variables parallel to each other and perpendicular to the change caused by the variable we wish to measure.

Figure 16 is an enlargement of the region of the curve with small values of M shown in Fig. 15. Three additional curves corresponding to permeabilities of 1.003, 1.005, and 1.007 are also included. The dashed line again indicates the variation with lift-off. The nine points shown on the graph represent three values of conductivity for each of three permeability curves. Here it can easily be seen that the variation due to conductivity, which is approximately parallel to the variation due to lift-off, is essentially perpendicular to the variation due to permeability. Thus, it is expected that we can separate these effects, responding to the permeability changes while ignoring changes in conductivity or lift-off.

Let us now suppose that the nine points on the impedance diagram of Fig. 16 represent the complex impedance of test coil L1 in the bridge circuit of Fig. 14. Corresponding to these nine values of impedance, there are nine values of the complex voltage $\vec{V}_1$ across L1 which are gotten by a 1:1 mapping of the impedances onto a voltage diagram. This is shown in Fig. 17. Here each point is identified by the set (a,b) where a identifies the permeability value and b the conductivity value.

The problem now resolves itself into finding a way to make the bridge insensitive to conductivity changes (i.e., to changes in $\vec{V}_1$ along the solid curves) while maximizing the response to permeability changes (i.e., to changes in $\vec{V}_1$ which jump from one curve to another). This is accomplished in the following manner.

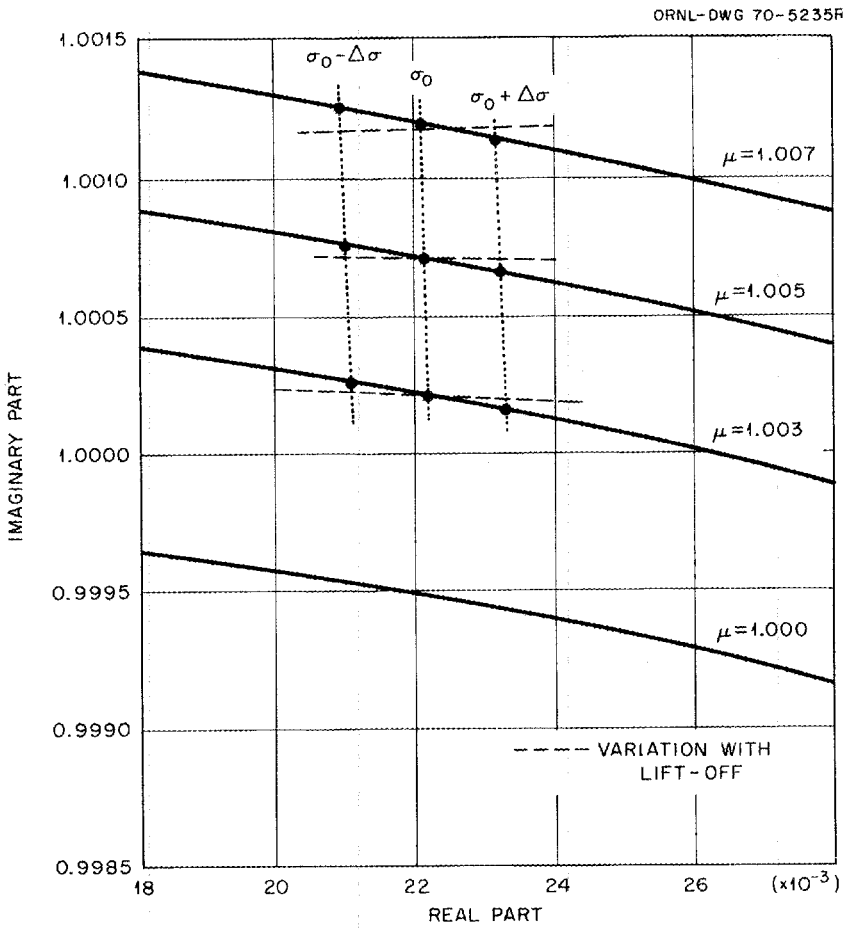

Fig. 16. Variations in Normalized Impedance Due to Variations in Permeability and Conductivity.

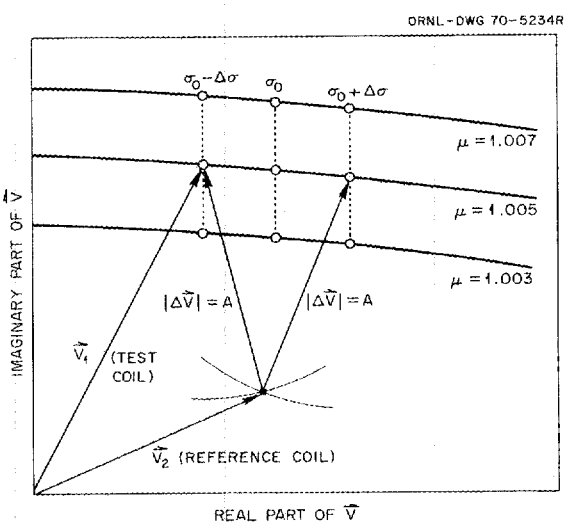

Fig. 17. Variations in Voltage Due to Variations in Conductivity and Permeability.

Suppose two circles of radius A are drawn about the end points [(2,1) and (2,3)] of the middle permeability curve of Fig. 17. The intersection of these two curves defines two points which are equidistant from the specified values of $\vec{V}_1$. Arbitrarily choosing the lower of these two points and assigning to it the coordinates (x_2, y_2), the bridge is now adjusted so that the complex voltage $\vec{V}_2$ across the reference coil L2 is given by $\vec{V}_2 = x_2 + jy_2$. Now we see that as the conductivity varies (thereby varying $\vec{V}_1$ along the solid curve), the phase of the unbalance voltage $(\Delta\vec{V} = \vec{V}_1 - \vec{V}_2)$ changes, but the magnitude remains practically constant. On the other hand, a permeability change will cause little variation in the phase of $\Delta\vec{V}$ but a relatively large change in the magnitude. Thus, by monitoring $|\Delta\vec{V}|$ it is possible to determine the permeability while ignoring changes in conductivity or lift-off.

The question arises as to the optimum value of A, the magnitude of the voltage unbalance at the two balance points. Large values of A will minimize the variation of $|\Delta\vec{V}|$ with conductivity but will decrease the sensitivity of the bridge to variations in permeability. In addition, large values of A tend to increase the detrimental effects of drifts in the circuit elements of the bridge. Hence, a compromise must be reached. Our work has shown that a value of A in the neighborhood of one-hundredth to one-tenth of $|\vec{V}_1|$ is a reasonable compromise.

The program responsible for making the foregoing calculations is the BRIDGE program (see p. 240). This program accepts as input the nine values of the normalized impedance shown in Fig. 16. It then calculates the nine corresponding complex values of $\vec{V}_1$, the bridge set point $\vec{V}_2$, and the nine values of $\Delta\vec{V}$. In order to do this, the user must specify the two points from which $\vec{V}_2$ is determined and the value of A. This is effected by typing in the correct values in lines 12 through 16 of the program. For instance, if lines 12 and 14 are:

```
12 DATA 2, 1
14 DATA 2, 3
```

the BRIDGE program will calculate the value of $\vec{V}_2$ using points (2,1) and (2,3) as shown in Fig. 17. Line 16 of the program gives the value of A in units of $|\vec{V}_1|$.

Description of BRIDGE

This program is designed to calculate the response of the bridge circuit shown in Fig. 14 to changes in the normalized impedance of the test coil L1. Since part of the input to this program consists of normalized impedances, the circuit is useful for the measurement of any parameter which would effect a change in these impedances (e.g., permeability, conductivity, clad thickness, etc.).

The bridge is designed to operate with a certain unbalance when both the test coil (L1) and the reference coil (L2) are in air. Then, when the test coil is brought into the vicinity of a conducting plane, the magnitude and phase of the unbalanced voltage are altered.

The program calculates the magnitude and phase of the unbalanced voltage at nine points on a 3 × 3 lattice consisting of three lift-off values and three values of the parameter being measured (e.g., permeability). This allows one to determine the sensitivity of the measurement to lift-off variations as well as to changes in the parameter being measured. The program then calculates the effect on the unbalanced voltage of a drift in each of the other circuit elements. This makes it possible to assign a maximum permissible drift to each element.

To execute the program, one need only type the following lines: (Note: Parentheses are not typed.)

12 DATA (X1), (Y1) [X1 and Y1 are bridge balance points (see p. 228)]
14 DATA (X2), (Y2) [X2 and Y2 are bridge balance points (see p. 228)]
16 DATA (A) [A is the normalized magnitude of the bridge unbalance (see p. 228)]
18–38 DATA (The normalized impedances are typed in lines 18–34)
200 LET L6 = [numerical value of minimum lift-off (in mils)]
210 LET L2 = [numerical value of lift-off increment (in mils)]
260 LET S1 = (numerical value of fractional change in frequency)
270 LET S2 = (numerical value of fractional change in amplifier gain)
280 LET S3 = (numerical value of fractional change in bridge resistor R6)
290 LET S4 = (numerical value of fractional change in both bridge resistors, R5 and R6, simultaneously)

```
300 LET S5 = (numerical value of fractional change in test coil
             inductance)
320 LET S7 = (numerical value of fractional change in both test
             coil and reference coil inductance, simultaneously)
330 LET S8 = (numerical value of fractional change in test coil
             dc resistance)
340 LET S9 = (numerical value of fractional change in test coil
             dc resistance and reference coil dc resistance,
             simultaneously)
350 LET S0 = (numerical value of fractional change in amplifier
             input resistance)
360 LET F = (numerical value of frequency)
370 LET V0 = (numerical value of applied voltage)
380 LET G = (numerical value of amplifier gain)
390 LET L1 = (numerical value of test coil inductance)
400 LET R1 = (numerical value of test coil dc resistance)
410 LET R3 = (numerical value of amplifier input resistance)
420 LET X3 = (numerical value of amplifier input reactance)
430 LET R5 = (numerical value of first bridge resistor)
440 LET R6 = (numerical value of second bridge resistor)
450 LET R4 = (numerical value of amplifier input resistance)
460 LET X4 = (numerical value of amplifier input reactance)
470 LET R2 = (numerical value of reference coil dc resistance)
480 LET L2 = (numerical value of reference coil inductance)
```

The program may now be run. The example below is presented as an additional aid to those who wish to use this program.

Sample Calculation of BRIDGE

Suppose we wish to measure the permeability of a piece of stainless steel tubing using an encircling coil in one leg of the bridge circuit. The tubing is assumed to be 0.250 in. in outside diameter with a nominal wall thickness of 0.015 in. The coil is assumed to be 0.125 in. long with inner and outer radii of 0.130 and 0.205 in., respectively. The frequency is taken to be 5 kHz.

The normalized impedances of the coil are determined by running the ENCCO program (see p. 150) for the nine values of permeability and lift-off desired. Suppose the relative permeability is known to be in the range of 1.003 to 1.007. The three permeability values used in the calculations are then chosen to be 1.003, 1.005, and 1.007. Since the nominal outer radius of the tubing is 0.125 in. while the inner radius of the coil is 0.130 in., the nominal lift-off is 5 mils. Assuming that this may vary by as much as ±1 mil, the three lift-off values are chosen to be 4, 5, and 6 mils.

Before running the ENCCO program it is necessary to run AIRCO in order to obtain the normalization factor for a cylindrical conductor. We first determine the mean radius of the coil to be 0.1675 in., so that

Normalized inner radius of coil = 0.130/0.1675 = 0.7761
Normalized outer radius of coil = 0.205/0.1675 = 1.2239
Normalized length of coil = 0.125/0.1675 = 0.7463

This information is typed into AIRCO in the following manner:

```
20 LET R1 = 0.7761
30 LET R2 = 1.2239
40 LET L = 0.7463
```

The program is now run, and the normalization factor for a cylindrical conductor is found to be 3.75739E-2. We may now proceed to the determination of the normalized impedances.

From the above data we find (for a relative permeability of 1.003 and nominal lift-off):

Normalized inner radius of tubing = 0.110/0.1675 = 0.6567
Normalized outer radius of tubing = 0.125/0.1675 = 0.7463

Furthermore,

Angular frequency of driving current = $2\pi \times 5000$ sec^{-1}
Permeability of inner (air) conductor = $4\pi \times 10^{-7}$ h/m
Relative permeability of inner conductor = 1
Conductivity of inner conductor = 0
Permeability of outer (stainless steel) conductor
= $1.003 \times 4\pi \times 10^{-7}$ h/m

Relative permeability of outer conductor = 1.003

Conductivity of stainless steel = 1.3333×10^6 mhos/m

Thus,

$$\omega\mu_1\sigma_1\bar{r}^2 = 0$$
$$\omega\mu_2\sigma_2\bar{r}^2 = 0.9528$$

The above information is typed into ENCCO using the following format:

```
12 LET R1 = 0.7761
14 LET R2 = 1.2239
16 LET L1 = 0
18 LET L2 = 0.7463
20 LET M1 = 0
60 LET X1 = X
62 LET Y1 = 0
22 LET U1 = 1
24 LET M2 = 0.9528
26 LET U2 = 1.003
28 LET A = 0.6567
30 LET B = 0.7463
32 LET A9 = 3.75739E-2
```

The program may now be run.

The same calculations must be performed for the two remaining permeabilities and lift-offs. This is most conveniently done by READ statements on the permeability (line 26) and tubing radii (lines 28 and 30) and by simple looping. When this is done, the following normalized impedances may be constructed, as shown in Table 1. The top line in Table 1 is the real part of the normalized impedance and the bottom line the imaginary part. We are now ready to run the BRIDGE program.

Suppose we wish to evaluate the effect of a 0.01% drift in each of the various circuit elements on the unbalance voltage. Thus, S1 through S0 (lines 260–350) are 0.0001. Furthermore, let

Test coil dc resistance = 1.78 ohms

Test coil inductance = 11.5 mH

Table 2. Normalized Impedance Values

Permeability (kHz)	Lift-Off, mils		
	4	5	6
1.003	2.27237E-2 1.00022	2.21138E-2 1.00022	2.14917E-2 1.00023
1.005	2.26893E-2 1.00073	2.20804E-2 1.00072	2.14593E-2 1.00072
1.007	2.26551E-2 1.00124	2.20472E-2 1.00122	2.14271E-2 1.00121

Reference coil inductance = 10 mH

Applied voltage = 100 V

Amplifier gain = 150

Amplifier input resistance = 100K ohms

Bridge resistor R5 = 100K ohms

Amplifier input reactance = 1×10^{10} ohms (this value was chosen to make the input reactance effectively infinite)

Normalized magnitude of the voltage unbalance = 0.04

The dc resistance of the reference coil and the value of bridge resistor R6 are not specified because they are made variable to allow control over the balance set point. Both of these values are calculated and printed out by the program.

The above information is typed into BRIDGE as follows:

```
12 DATA 2, 1
14 DATA 2, 3
16 DATA 0.04
18 DATA 2.127237E-2, 1.00022
20 DATA 2.21138E-2, 1.00022
22 DATA 2.14917E-2, 1.00023
24 DATA 2.26893E-2, 1.00073
26 DATA 2.20804E-2, 1.00072
28 DATA 2.14593E-2, 1.00072
30 DATA 2.26551E-2, 1.00124
32 DATA 2.20472E-2, 1.00122
```

```
34 DATA 2.14271E-2, 1.00121
200 L6 = 4
210 L7 = 1
260 S1 = 1E-4
270 S2 = 1E-4
280 S3 = 1E-4
290 S4 = 1E-4
300 S5 = 1E-4
310 S6 = 1E-4
320 S7 = 1E-4
330 S8 = 1E-4
340 S9 = 1E-4
350 S0 = 1E-4
360 F = 5E-3
370 V0 = 100
380 G = 150
390 L1 = 1.15E-2
400 R1 = 178
410 R3 = 1E-5
420 X3 = 1E-10
430 R5 = 1E-5
440 R4 = 1E-5
450 X4 = 1E-10
460 L2 = 0.01
```

The program is now run with the following results:

```
              BRIDGE UNBALANCE SET USING
X1              Y1              X2              Y2     NOR MAG OF UNBAL
 2               1               2               3              .04
BRIDGE VOLTAGE 100 VOLTS AC   FREQUENCY 5000 HZ    GAIN 150
   BDG RES     AIR INDUCTANCE COIL D C RES    AMP IMP R-I
1   100000     .0115           178             100000   1E+10
2      ?       .01              ?              100000   1E+10
X IS SET ON .187769          Y IS SET ON .342663

NOMINAL BRIDGE VOLTAGES AND PHASES
LIFT-OFF       4 MILS          5 MILS          6 MILS
PERMEABILITY
1.003          2.40112         2.40114         2.40216
              -2.74206E-2     -2.74043E-2     -2.63881E-2
```

PHASE	88.812	89.5949	90.3929
DRIFT	0	0	0
1.005	2.42854	2.42805	2.42854
	1.01863E-10	-4.96904E-4	1.01863E-10
PHASE	88.8598	89.6326	90.4208
DRIFT	0	0	0
1.007	2.45597	2.45496	2.45493
	2.74223E-2	2.64114E-2	2.63885E-2
PHASE	88.9062	89.6693	90.4478
DRIFT	0	0	0

VALUES OF R2 AND R6 FOR BALANCE
R2 = 169.476 R6 = 91029.

EFFECTS OF DRIFTS
.01 % INCREASE IN FREQUENCY F = 5000.5
BRIDGE UNBALANCE POINT DRIFTS TO X = .18777 Y = .342698

LIFT-OFF	4 MILS	5 MILS	6 MILS
PERMEABILITY			
1.003	2.40136	2.40138	2.40239
	-2.71798E-2	-2.71651E-2	-2.61506E-2
PHASE	88.809	89.5918	90.3899
DRIFT	2.40849E-4	2.3916E-4	2.37537E-4
1.005	2.42879	2.42829	2.42878
	2.43486E-4	-2.55137E-4	2.40114E-4
PHASE	88.8568	89.6296	90.4178
DRIFT	2.43486E-4	2.41767E-4	2.40114E-4
1.007	2.45621	2.4552	2.45518
	2.76685E-2	2.66558E-2	2.66311E-2
PHASE	88.9033	89.6663	90.4449
DRIFT	2.46128E-4	2.44378E-4	2.42694E-4

.01 % INCREASE IN AMPLIFIER GAIN G = 150.015
BRIDGE UNBALANCE POINT DRIFTS TO X = .187769 Y = .342663

LIFT-OFF	4 MILS	5 MILS	6 MILS
PERMEABILITY			
1.003	2.40136	2.40138	2.4024
	-2.71805E-2	-2.71642E-2	-2.61479E-2
PHASE	88.812	89.5949	90.3929
DRIFT	2.40083E-4	2.40084E-4	2.40185E-4
1.005	2.42879	2.42829	2.42879
	2.42825E-4	-2.54129E-4	2.42824E-4
PHASE	88.8598	89.6326	90.4208
DRIFT	2.42825E-4	2.42775E-4	2.42824E-4
1.007	2.45621	2.4552	2.45518
	2.76679E-2	2.66569E-2	2.66339E-2
PHASE	88.9062	89.6693	90.4478
DRIFT	2.45567E-4	2.45466E-4	2.45462E-4

.01 % INCREASE IN BRIDGE RESISTOR R6 = 91038.1
BRIDGE UNBALANCE POINT DRIFTS TO X = .187751 Y = .342629

LIFT-OFF PERMEABILITY	4 MILS	5 MILS	6 MILS
1.003	2.4063	2.40628	2.40726
	-2.22414E-2	-2.22627E-2	-2.12858E-2
PHASE	88.7472	89.5284	90.3247
DRIFT	5.17919E-3	5.1416E-3	5.10229E-3
1.005	2.43372	2.43319	2.43364
	5.17691E-3	4.64284E-3	5.10088E-3
PHASE	88.7956	89.5668	90.3533
DRIFT	5.17691E-3	5.13975E-3	5.10088E-3
1.007	2.46114	2.46009	2.46003
	.032597	3.15494E-2	.031488
PHASE	88.8427	89.6041	90.381
DRIFT	5.17468E-3	5.13794E-3	5.09951E-3

.01 % INCREASE IN BOTH BRIDGE RESISTORS R5-R6 100010. 91038.1
BRIDGE UNBALANCE POINT DRIFTS TO X = .187751 Y = .342629

LIFT-OFF PERMEABILITY	4 MILS	5 MILS	6 MILS
1.003	2.40088	2.4009	2.40192
	-2.76598E-2	-2.76435E-2	-2.66274E-2
PHASE	88.8121	89.5949	90.3929
DRIFT	-2.39216E-4	-2.39219E-4	-2.39321E-4
1.005	2.4283	2.42781	2.4283
	-2.41947E-4	-7.38803E-4	-2.4195E-4
PHASE	88.8598	89.6326	90.4208
DRIFT	-2.41947E-4	-2.41899E-4	-2.4195E-4
1.007	2.45572	2.45471	2.45469
	2.71777E-2	2.61668E-2	2.61439E-2
PHASE	88.9063	89.6693	90.4479
DRIFT	-2.44679E-4	-2.44579E-4	-2.44579E-4

.01 % INCREASE IN BRIDGE VOLTAGE VO = 100.01
BRIDGE UNBALANCE POINT DRIFTS TO X = .187788 Y = .342698

LIFT-OFF PERMEABILITY	4 MILS	5 MILS	6 MILS
1.003	2.40136	2.40138	2.4024
	-2.71805E-2	-2.71642E-2	-2.61479E-2
PHASE	88.812	89.5949	90.3929
DRIFT	2.40082E-4	2.40084E-4	2.40184E-4
1.005	2.42879	2.42829	2.42879
	2.42825E-4	-2.5413E-4	2.42823E-4
PHASE	88.8598	89.6326	90.4208
DRIFT	2.42825E-4	2.42774E-4	2.42823E-4
1.007	2.45621	2.4552	2.45518
	2.76679E-4	2.66569E-4	2.66339E-2
PHASE	88.9062	89.6693	90.4478
DRIFT	2.45567E-4	2.45465E-4	2.45462E-4

.01 % INCREASE IN TEST COIL INDUCTANCE L1 = 1.15012E-2
BRIDGE UNBALANCE POINT DRIFTS TO X = .187769 Y = .342663

LIFT-OFF	4 MILS	5 MILS	6 MILS
PERMEABILITY			
1.003	2.4065	2.40652	2.40753
	-.02204	-2.20252E-2	-2.10116E-2
PHASE	88.8099	89.5911	90.3874
DRIFT	5.38065E-3	5.37902E-3	5.37647E-3
1.005	2.43393	2.43343	2.43392
	5.38332E-3	4.8847E-3	5.37899E-3
PHASE	88.8576	89.6288	90.4153
DRIFT	5.38332E-3	5.3816E-3	5.37899E-3
1.007	2.46135	2.46034	2.46031
	3.28083E-2	3.17956E-2	.03177
PHASE	88.904	89.6654	90.4424
DRIFT	5.38599E-3	5.38419E-3	5.38152E-3

.01 % INDUCTANCE INCREASE IN BOTH L1-L2 1.15012E-2 .010001
BRIDGE UNBALANCE POINT DRIFTS TO X = .18777 Y = .342698

LIFT-OFF	4 MILS	5 MILS	6 MILS
PERMEABILITY			
1.003	2.40136	2.40138	2.40239
	-2.71798E-2	-2.71651E-2	-2.61506E-2
PHASE	88.809	89.5918	90.3899
DRIFT	2.40849E-4	2.39159E-4	2.37536E-4
1.005	2.42879	2.42829	2.42878
	2.43486E-4	-2.55137E-4	2.40114E-4
PHASE	88.8568	89.6296	90.4178
DRIFT	2.43486E-4	2.41767E-4	2.40114E-4
1.007	2.45621	2.4552	2.45518
	2.76685E-2	2.66558E-2	2.66311E-2
PHASE	88.9033	89.6663	90.4449
DRIFT	2.46128E-4	2.44378E-4	2.42694E-4

.01 % INCREASE IN TEST COIL RESISTANCE R1 = 178.018
BRIDGE UNBALANCE POINT DRIFTS TO X = .187769 Y = .342663

LIFT-OFF	4 MILS	5 MILS	6 MILS
PERMEABILITY			
1.003	2.40114	2.40112	2.4021
	-2.74024E-2	-2.74223E-2	-.026443
PHASE	88.7488	89.5316	90.3297
DRIFT	1.8215E-5	-1.79928E-5	-5.49031E-5
1.005	2.42856	2.42803	2.42849
	1.5971E-5	-5.16678E-4	-5.62287E-5
PHASE	88.7973	89.5701	90.3583
DRIFT	1.59709E-5	-1.97737E-5	-5.62288E-5
1.007	2.45598	2.45493	2.45487
	2.74361E-2	2.63899E-2	2.63309E-2
PHASE	88.8444	89.6074	90.386
DRIFT	1.37882E-5	-2.15038E-5	-5.75116E-5

.01 % RESISTANCE INCREASE IN BOTH R1-R2 178.018 169.493
BRIDGE UNBALANCE POINT DRIFTS TO X = .187788 Y = .342663

LIFT-OFF	4 MILS	5 MILS	6 MILS
PERMEABILITY			
1.003	2.40112	2.40114	2.40215
	-2.74249E-2	-2.74069E-2	-.026389
PHASE	88.815	89.5978	90.3958
DRIFT	-4.30326E-6	-2.6276E-6	-9.19506E-7
1.005	2.42854	2.42804	2.42854
	-4.22006E-6	-4.9947E-4	-8.79954E-7
PHASE	88.8627	89.6355	90.4237
DRIFT	-4.22016E-6	-2.56595E-6	-8.80056E-7
1.007	2.45596	2.45495	2.45493
	2.74182E-2	2.64089E-2	2.63876E-2
PHASE	88.9091	89.6721	90.4507
DRIFT	-4.13992E-6	-2.50635E-6	-8.39427E-7

.01 % INCREASE IN AMPLIFIER INPUT RES R3 = 100010
BRIDGE UNBALANCE POINT DRIFTS TO X = .187769 Y = .342663

LIFT-OFF	4 MILS	5 MILS	6 MILS
PERMEABILITY			
1.003	2.40114	2.40116	2.40218
	-2.74007E-2	-2.73842E-2	-2.63679E-2
PHASE	88.8124	89.5952	90.3932
DRIFT	1.99134E-5	2.00838E-5	2.0255E-5
1.005	2.42856	2.42807	2.42856
	1.99344E-5	-4.76802E-4	2.02704E-5
PHASE	88.8601	89.6329	90.4211
DRIFT	1.99343E-5	2.01022E-5	2.02703E-5
1.007	2.45599	2.45498	2.45495
	2.74423E-2	2.64315E-2	2.64087E-2
PHASE	88.9066	89.6696	90.4481
DRIFT	1.99551E-5	2.01209E-5	2.02868E-5

RANGE 5.38098E-2 LIFT-OFF: 1.92136 %
RMS DRIFT 7.49254E-3 % OF RANGE IS 13.9241

The program first prints out the bridge set points (X1, Y1; X2, Y2), the normalized magnitude of the unbalanced voltage, the applied voltage, the frequency and the amplifier gain. Next it prints out the values of the various components of the bridge. Note that a question mark is printed for the values of bridge resistor 2 (R6) and coil 2-dc resistance (R2). This is done to indicate that these values are not yet known. The program then calculates and prints out the real and imaginary parts of the voltage $\vec{V}_2$ that must exist across the reference coil to produce the

specified unbalanced voltage. These values are given, respectively, by the lines "x is set on _____" and "y is set on _____."

Next the program prints out the nominal output voltages and phases (i.e., the values that would exist in the absence of drifts in the circuit components). There are seen to be four numbers associated with each value of lift-off and permeability. From top to bottom, these values are the magnitude of the unbalance voltage, the difference between the magnitudes of the calculated and specified unbalance voltages, the phase of the unbalance voltage (in degrees) and the DRIFT, which is the difference between the magnitude of the unbalance voltage and the corresponding value in the nominal voltages and phases block. Obviously, the latter value will be zero for the nominal block.

As an example, in the present case, for a lift-off of 4 mils and a permeability of 1.005, the magnitude of the output voltage is 2.42854 V, the difference between this value and the specified value is 1.01863×10^{-10} V (it should be quite small since the present example is one of the set points) and the phase of the output voltage is 88.8598 deg. The DRIFT is, of course, zero.

Following the nominal voltages and phases block, the values of R2 and R6 necessary to give the specified unbalance voltage are printed. Thus, if R2 is 169.476 Ω and R6 is 91.029K Ω, then the real part of the complex voltage across the test coil will be 0.187769 and the imaginary part will be 0.342663, as was printed out previously.

The program next determines the effects of drifts in the circuit components on the magnitude and phase of the unbalanced voltage. For example, for a 0.01% increase in frequency, the real and imaginary parts of the bridge unbalanced voltage drift to 0.18777 and 0.342698, respectively. For a lift-off of 4 mils and a permeability of 1.007, the output voltage is 2.45621 V and the phase is 88.9033 deg. This output voltage represents a drift of 2.40083×10^{-4} V from the corresponding nominal value.

A glance at the drifts in the various blocks indicates that the worst offenders are the bridge resistor R6 and the test coil inductance L1. A 0.01% increase in either of these quantities gives rise to a drift of about 5×10^{-3} V. It should be noted, however, that this is

for unmatched drift (i.e., if either R5 and R6 drift together or L1 and L2 drift together, the effect is much less).

At the end of the print-out are listed the RANGE, which is the average voltage change due to the specified permeability change; the LIFT-OFF percent, which is the percent of RANGE attributable to lift-off errors (i.e., it is the voltage change due to lift-off variations divided by the voltage change due to permeability variations, multiplied by 100); the RMS DRIFT, which is the root mean square value of the set composed of the largest drift in each block; and the % OF RANGE, which is the percent of the RANGE represented by the RMS DRIFT.

BRIDGE Program

```
10 REM              BRIDGE            VERSIØN  04/21/70
12 DATA 2,1
14 DATA 2,3
16 DATA .04
18 DATA 2.27237E-2,1.00022
20 DATA 2.21138E-2,1.00022
22 DATA 2.14917E-2,1.00023
24 DATA 2.26893E-2,1.00073
26 DATA 2.20804E-2,1.00072
28 DATA 2.14593E-2,1.00072
30 DATA 2.26551E-2,1.00124
32 DATA 2.20472E-2,1.00122
34 DATA 2.14271E-2,1.00121
200 L6=3
210 L7=2
220 READ X1,Y1,X2,Y2,A
230 PRINT"              BRIDGE UNBALANCE SET USING"
240PRINT"X1","Y1","X2","Y2       NØR MAG ØF UNBAL"
250 PRINTX1,Y1,X2,Y2,A
260 S1=1E-4
270 S2=1E-4
280 S3=1E-4
290 S4=1E-4
300 S5=1E-4
310 S6=1E-4
320 S7=1E-4
330 S8=1E-4
340 S9=1E-4
350 S0=1E-4
360 F=5E3
370 V0=100
380 G=150
390 L1=1.15E-2
```

```
400 R1=178
410 R3=1E5
420 X3=1E10
430 R5=1E5
440 R4=1E5
450 X4=1E10
460 L2=.01
470PRINT"BRIDGE VØLTAGE";VO;"VØLTS AC    FREQUENCY";F;"HZ   GAIN";G
480 PRINT"   BDG RES","AIR INDUCTANCE","CØIL D C RES","AMP IMP R-I"
490PRINT"1";R5,L1,R1,R3;X3
500 PRINT"2";"   ?",L2,"  ?",R4;X4
510W=2*PI*F
520 FØR I =1TØ3
530 FØR J=1 TØ 3
540 READ R(I,J),I(I,J)
550 GØ SUB 2180
560 NEXTJ
570NEXTI
580 A=A*SQR((V(X1,Y1)↑2+W(X1,Y1)↑2)/(R(X1,Y1)↑2+I(X1,Y1)↑2))
590C=(V(X1,Y1)-V(X2,Y2))↑2
600B=(W(X1,Y1)-W(X2,Y2))↑2
610Q=SGN((V(X1,Y1)-V(X2,Y2))*(W(X1,Y1)-W(X2,Y2)))
620X=.5*(V(X1,Y1)+V(X2,Y2)+Q*SQR(B*(4*A*A-B-C)/(B+C)))
630 Y=.5*(W(X1,Y1)+W(X2,Y2)-SQR(C*(4*A*A-B-C)/(B+C)))
640A=A*G
650PRINT"X IS SET ØN";X,"Y IS SET ØN";Y
660PRINT
670 PRINT"NØMINAL BRIDGE VØLTAGES AND PHASES"
680 GØ SUB 2430
690 FØR I=1 TØ 3
700 FØR J=1 TØ 3
710 S(I,J)=A(I,J)
720 NEXT J
730 NEXT I
740 GØ SUB 2540
750 FØR I=1 TØ 3
760 Q3=A(I,1)-A
770 Q4=Q3
780 FØR J=2 TØ 3
790 IF (A(I,J)-A)<Q3 THEN 810
800 Q3=A(I,J)-A
810 IF (A(I,J)-A)>Q4 THEN 830
820 Q4=A(I,J)-A
830 NEXT J
840 D(I)=ABS(Q3-Q4)
850 C(I)=(Q3+Q4)/2
860 NEXT I
870 G1=D(1)
880 FØR I=2 TØ 3
890 G2=D(I)
900 IF G2<G1 THEN 920
910 G1=G2
920 NEXT I
930 Q5=ABS(C(1)-C(3))
940 K1=(X*(VO-X)-Y*Y)/(X*X+Y*Y)
950 K2=-Y*VO/(X*X+Y*Y)
960 A1=X4+K1*R4/K2
970 C=W*L2*(X4*W*L2+K1*R4/K2*(X4+W*L2))
980 R2=(-R4*X4+SQR(R4*R4*X4*X4-4*A1*C))/(2*A1)
```

```
990 Ø1=R4*X4*X4*(R2*R2+R4*R2+W*W*L2*L2)
1000 Ø2=R4*R4*X4*(X4*W*L2+W*W*L2*L2+R2*R2)
1010 Ø3=X4*(R2+R4)+R4*W*L2
1020 Ø4=X4*W*L2-R2*R4
1030 R6=(K1*Ø1-K2*Ø2)/(Ø3*Ø3+Ø4*Ø4)
1040 PRINT"VALUES ØF R2 AND R6 FØR BALANCE"
1050 PRINT"R2=";R2,"R6=";R6
1060 PRINT
1070 PRINT "EFFECTS ØF DRIFTS"
1080 IF S1=0 THEN 1180
1090 W=W*(1+S1)
1100PRINT 100*S1;"% INCREASE IN FREQUENCY    F=";W/(2*PI)
1110 GØ SUB 2270
1120 GØ SUB 2370
1130 GØ SUB 2430
1140 GØ SUB 2540
1150 GØ SUB 2720
1160 TO=Q6
1170 W=W/(1+S1)
1180 IF S2=0 THEN 1280
1190 G=G*(1+S2)
1200PRINT 100*S2;"% INCREASE IN AMPLIFIER GAIN    G=";G
1210 GØ SUB 2270
1220 GØ SUB 2370
1230 GØ SUB 2430
1240 GØ SUB 2540
1250 GØ SUB 2720
1260 T1=Q6
1270 G=G/(1+S2)
1280 IF S3=0 THEN 1380
1290 R6=R6*(1+S3)
1300PRINT 100*S3;"% INCREASE IN BRIDGE RESISTØR     R6=";R6
1310 GØ SUB 2270
1320 GØ SUB 2370
1330 GØ SUB 2430
1340 GØ SUB 2540
1350 GØ SUB 2720
1360 T2=Q6
1370 R6=R6/(1+S3)
1380 IF S4=0 THEN 1500
1390 R5=R5*(1+S4)
1400 R6=R6*(1+S4)
1410 PRINT100*S4;"% INCREASE IN BØTH BRIDGE RESISTØRS  R5-R6";R5;R6
1420 GØ SUB 2270
1430 GØ SUB 2370
1440 GØ SUB 2430
1450 GØ SUB 2540
1460 GØ SUB 2720
1470 T3=Q6
1480 R5=R5/(1+S4)
1490 R6=R6/(1+S4)
1500 IF S5=0 THEN 1600
1510 VO=VO*(1+S5)
1520PRINT 100*S5;"% INCREASE IN BRIDGE VØLTAGE    VO=";VO
1530 GØ SUB 2270
1540 GØ SUB 2370
1550 GØ SUB 2430
1560 GØ SUB 2540
```

```
1570 GØ SUB 2720
1580 T4=Q6
1590 VO=VO/(1+S5)
1600 IF S6=0 THEN 1700
1610 L1=L1*(1+S6)
1620PRINT 100*S6;"% INCREASE IN TEST CØIL INDUCTANCE  L1=";L1
1630 GØ SUB 2270
1640 GØ SUB 2370
1650 GØ SUB 2430
1660 GØ SUB 2540
1670 GØ SUB 2720
1680 T5=Q6
1690 L1=L1/(1+S6)
1700 IF S7=0 THEN 1820
1710 L1=L1*(1+S7)
1720 L2=L2*(1+S7)
1730PRINT 100*S7;"% INDUCTANCE INCREASE IN BØTH L1&L2";L1;L2
1740 GØ SUB 2270
1750 GØ SUB 2370
1760 GØ SUB 2430
1770 GØ SUB 2540
1780 GØ SUB 2720
1790 T6=Q6
1800 L1=L1/(1+S7)
1810 L2=L2/(1+S7)
1820 IF S8=0 THEN 1920
1830 R1=R1*(1+S8)
1840PRINT 100*S8;"% INCREASE IN TEST CØIL RESISTANCE  R1=";R1
1850 GØ SUB 2270
1860 GØ SUB 2370
1870 GØ SUB 2430
1880 GØ SUB 2540
1890 GØ SUB 2720
1900 T7=Q6
1910 R1=R1/(1+S8)
1920 IF S9=0 THEN 2040
1930 R1=R1*(1+S9)
1940 R2=R2*(1+S9)
1950PRINT 100*S9;"% RESISTANCE INCREASE IN BØTH R1&R2";R1;R2
1960 GØ SUB 2270
1970 GØ SUB 2370
1980 GØ SUB 2430
1990 GØ SUB 2540
2000 GØ SUB 2720
2010 T8=Q6
2020 R1=R1/(1+S9)
2030 R2=R2/(1+S9)
2040 IF SO=0 THEN 2130
2050 R3=R3*(1+SO)
2060PRINT 100*SO;"% INCREASE IN AMPLIFIER INPUT RES  R3=";R3
2070 GØ SUB 2270
2080 GØ SUB 2370
2090 GØ SUB 2430
2100 GØ SUB 2540
2110 GØ SUB 2720
2120 T9=Q6
2130 Q8=TO*TO+T1*T1+T2*T2+T3*T3+T4*T4+T5*T5+T6*T6+T7*T7+T8*T8+T9*T9
2140 Q9=SQR(Q8)
2150 PRINT"RANGE";Q5;"    LIFTØFF:";100*G1/Q5;"%"
```

```
2160 PRINT"RMS DRIFT";Q9;"     % ØF RANGE IS";100*Q9/Q5
2170 GØ TØ 2810
2180 A1=R3*X3*(R1+W*L1*R(I,J))
2190 B1=R3*X3*W*L1*I(I,J)
2200 C1=R3*(X3+W*L1*I(I,J))+X3*(R1+W*L1*R(I,J))
2210 D1=X3*W*L1*I(I,J)-R3*(R1+W*L1*R(I,J))
2220Q1=(A1*C1+B1*D1)/(C1*C1+D1*D1)
2230Q2=(B1*C1-A1*D1)/(C1*C1+D1*D1)
2240V(I,J)=VØ*(Q1*(R5+Q1)+Q2*Q2)/((R5+Q1)↑2+Q2↑2)
2250W(I,J)=VØ*Q2*R5/((R5+Q1)↑2+Q2↑2)
2260 RETURN
2270 A1=R4*X4*R2
2280 B1=R4*X4*W*L2
2290 C1=R4*(X4+W*L2)+X4*R2
2300 D1=X4*W*L2-R4*R2
2310Q1=(A1*C1+B1*D1)/(C1*C1+D1*D1)
2320Q2=(B1*C1-A1*D1)/(C1*C1+D1*D1)
2330 X=VØ*(Q1*(R6+Q1)+Q2*Q2)/((R6+Q1)↑2+Q2↑2)
2340 Y=VØ*Q2*R6/((R6+Q1)↑2+Q2↑2)
2350 PRINT"BRIDGE UNBALANCE PØINT DRIFTS TØ X=";X;"   Y=";Y
2360RETURN
2370FØRI=1TØ3
2380 FØR J=1 TØ 3
2390 GØ SUB 2180
2400NEXTJ
2410NEXTI
2420RETURN
2430 FØR I=1 TØ 3
2440 FØR J=1 TØ 3
2450 A(I,J)=G*SQR((V(I,J)-X)↑2+(W(I,J)-Y)↑2)
2460 U(I,J)=ATN((W(I,J)-Y)/(V(I,J)-X))
2470 IF (V(I,J)-X)<0 THEN 2490
2480 GØ TØ 2500
2490 U(I,J)=U(I,J)+PI
2500 U(I,J)=57.295779513*U(I,J)
2510 NEXT J
2520 NEXT I
2530 RETURN
2540 PRINT"LIFT-ØFF",L6;"MILS",L6+L7;"MILS",L6+2*L7;"MILS"
2550 PRINT "PERMEABILITY"
2560 PRINT"1.003",A(1,1),A(1,2),A(1,3)
2570 PRINT"  ",A(1,1)-A,A(1,2)-A,A(1,3)-A
2580 PRINT"PHASE",U(1,1),U(1,2),U(1,3)
2590 PRINT"DRIFT",A(1,1)-S(1,1),A(1,2)-S(1,2),A(1,3)-S(1,3)
2600 PRINT
2610 PRINT"1.005",A(2,1),A(2,2),A(2,3)
2620 PRINT"  ",A(2,1)-A,A(2,2)-A,A(2,3)-A
2630 PRINT"PHASE",U(2,1),U(2,2),U(2,3)
2640 PRINT"DRIFT",A(2,1)-S(2,1),A(2,2)-S(2,2),A(2,3)-S(2,3)
2650 PRINT
2660 PRINT"1.007",A(3,1),A(3,2),A(3,3)
2670 PRINT"  ",A(3,1)-A,A(3,2)-A,A(3,3)-A
2680 PRINT"PHASE",U(3,1),U(3,2),U(3,3)
2690 PRINT"DRIFT",A(3,1)-S(3,1),A(3,2)-S(3,2),A(3,3)-S(3,3)
2700 PRINT
2710 RETURN
2720 Q6=ABS(A(1,1)-S(1,1))
2730 FØR I=1 TØ 3
```

```
2740 FØR J=1 TØ 3
2750 Q7=ABS(A(I,J)-S(I,J))
2760 IF Q7<Q6 THEN 2780
2770 Q6=Q7
2780 NEXT J
2790 NEXT I
2800 RETURN
2810 END
```

PHASE-SENSITIVE EDDY-CURRENT INSTRUMENT

Description of PHASEN

For a circuit containing no other components, the magnitude and phase of the voltage induced in the pickup coils of the reflection-type coil arrangement, shown in Fig. 5, p. 61, can be determined by running the RFLC (p. 82) or RFLM program (see p. 51) for the particular coils. If this coil arrangement is utilized in an actual circuit, however, the other circuit elements will alter the magnitude and phase of the induced voltage.

One such use of the reflection-type coil arrangement is in the phase-sensitive eddy-current instrument, an equivalent circuit for which is shown in Fig. 18. The PHASEN program was designed to calculate the magnitude and phase of the voltage supplied to the discriminator of the instrument and to evaluate the phase shifts introduced by drifts in the circuit elements. The calculations are made, not for a single lift-off and clad thickness (or conductivity), but for a 3×5 lattice of points involving five lift-off values and three clad thicknesses (or conductivities). This allows one to determine the sensitivity of the instrument to lift-off variations as well as to changes in the clad thickness (or conductivity).

To execute this program, it is necessary to determine the mutual inductance between the driver and pickup coils and also the real and imaginary parts of the normalized impedance of both driver and pickup coils. This information is provided by two additional programs. If the instrument is being used to measure clad thickness, the mutual inductance is obtained by running the RFLC program; if conductivity, the appropriate program is RFLM. In the former case the normalized impedances

ORNL-DWG 70-5237

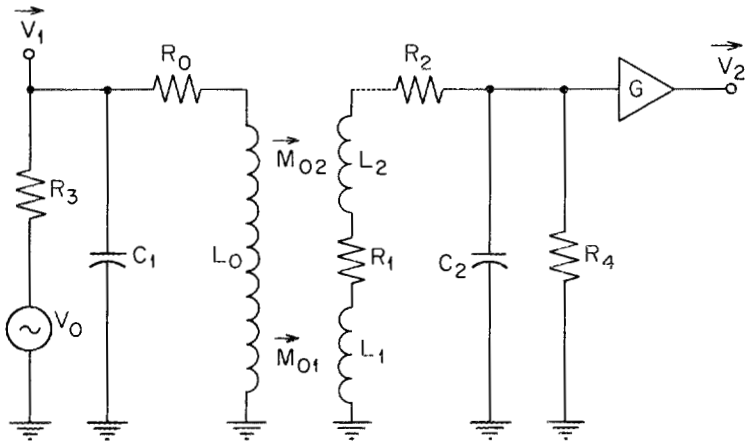

Fig. 18. Equivalent Circuit for the Phase-Sensitive Eddy-Current Instrument.

of driver and pickup coils are obtained by running CLAD1 (see p. 71) and in the latter case by running MREP (see p. 57).

It is worth noting that the quantity actually calculated by the RLFC (or RFLM) program is not the mutual inductance between driver and pickup coils, but rather the induced voltage divided by the product of frequency, driver current, number of turns on driver coil, number of turns on a pickup coil, and the square of the driver coil mean radius (in meters). From this information, the complex mutual inductance is calculated by PHASEN.

In order to expedite the input of data, the PHASEN program has been designed to read from a file the data generated by the RFLC (RFLM) and CLAD1 (MREP) programs. In order to do this, it is necessary to alter RFLC (RFLM) and CLAD1 (MREP) so that they will print on a file. This is explained in the sample calculation of this program.

For BASIC compilers which do not have the capability of printing on a file it will be necessary to type in the data manually. Care should be taken to ensure that the RFLC (RFLM) data are typed in first and that all data are typed in the correct order.

To execute the PHASEN program, one types the following lines. (Note: Parentheses are not typed.)

```
20 LET S0 = (numerical value of fractional change in dc resistance
             of the driver coil)
30 LET S1 = (numerical value of fractional change in dc resistance
             of the pickup coil)
40 LET S2 = (numerical value of fractional change in input
             resistance of the amplifier)
50 LET S3 = (numerical value of fractional change in applied voltage)
60 LET S4 = (numerical value of fractional change in frequency)
70 LET S5 = (numerical value of fractional change in capacitance
             of the driver circuit)
80 LET S6 = (numerical value of fractional change in capacitance
             of the pickup circuit)
90 LET S7 = (numerical value of fractional change in driver
             inductance)
100 LET S8 = (numerical value of fractional change in pickup
              inductance)
110 LET R0 = (numerical value of dc resistance of the driver coil)
120 LET R1 = (numerical value of dc resistance of first pickup coil)
130 LET R2 = (numerical value of dc resistance of second pickup coil)
140 LET R3 = (numerical value of internal resistance of voltage
              source)
150 LET R4 = (numerical value of input resistance of the amplifier)
160 LET C1 = (numerical value of capacitance of the driver circuit)
170 LET C2 = (numerical value of capacitance of the pickup circuit)
180 LET L0 = (numerical value of driver inductance)
190 LET L1 = (numerical value of inductance of the first pickup coil)
200 LET L2 = (numerical value of inductance of the second pickup
              coil)
210 LET V0 = (numerical value of applied voltage)
220 LET N = (numerical value of number of turns on driver coil)
230 LET N1 = (numerical value of number of turns on a pickup coil)
240 LET G = (numerical value of gain of amplifier)
250 LET R = [numerical value of mean radius of the driver coil
             (in meters)]
260 LET F = (numerical value of frequency)
```

430 LET R5 = (numerical value of external series resistance, if any, added to driver coil)

The program may now be run.

The print-out by the computer will have the following format:

```
DRIVER RES        PICKUP RES        AMP INPUT RES        VOLTAGE
  (R0)              (R1)                (R4)               (V0)
DRIVER IND        PICKUP IND          GAIN               FREQUENCY
  (L0)              (L1)                (G)                (F)
DRIVER SERIES RESISTANCE IS (R5)
V2                % OF RANGE                        DRIFTS
 ------             ------                 ------   ------   ------
                                           ------   ------   ------
                                           ------   ------   ------
 PHASE SHIFT ------      RMS DRIFT ------       % IS ------
```

The various symbols enclosed in parentheses indicate that the numerical value of the symbol will be printed.

The first column, headed "V2," is the magnitude of the voltage at the output of the amplifier. The second column, headed "% OF RANGE," is roughly the percent of the total phase shift attributable to variations in lift-off [actually, it is the change in phase shift due to lift-off variations divided by the change in phase shift due to clad thickness (or conductivity) variations, multiplied by 100]. Under the third column, headed "DRIFTS," are printed nine values. Each of these corresponds to the largest value in the 3 × 5 lattice of phase shift changes produced by a drift in one of the nine circuit elements whose variations are given in lines 20 through 100 of the program. Reading from left to right and from top to bottom, the drifts are those due, respectively, to changes in dc resistance of the driver coil, dc resistance of the pickup coil, input resistance of the amplifier, applied voltage, frequency, capacitance of the driver circuit, capacitance of the pickup circuit, driver inductance, and pickup inductance. Finally, the last line of the print-out gives the PHASE SHIFT, which is the phase shift due to the specified variation in clad thickness (or conductivity), the RMS DRIFT, which is the root mean square value of all nine drifts; and the PERCENT OF PHASE SHIFT represented by RMS DRIFT (i.e., the value of RMS DRIFT divided by the value of PHASE SHIFT) multiplied by 100.

The example below is presented as an additional aid to those who wish to use this program.

Sample Calculation of PHASEN

Suppose we wish to evaluate the effect of drifts in circuit elements on the measurement of the thickness of a stainless steel plate whose thickness may vary by ±10%. We will assume that the driver coil is 0.500 in. long and that the inner and outer radii of the coil are 0.200 and 0.300 in., respectively. The pickups are 0.200 in. long with inner and outer radii of 0.100 and 0.150 in., respectively, and are mounted flush with the ends of the driver. The stainless steel plate is taken to be 0.025 in. thick ±10%.

Before proceeding, it will be necessary to run the RFLC program (see p. 82) to determine the mutual inductance between driver and pickup coils. The sample calculation provided in the description of the RFLC program is the same as needed for the present example; thus, we may use the data given therein.

As was previously mentioned, the PHASEN program is designed to input from a file the data generated by the auxiliary programs. To do this, it will be necessary to alter these programs so that they will print on a file. This is accomplished as follows.

Suppose we wish the RFLC program to print on a file named STORE. We first save an empty file by this name. Then we call up the RLFC program and type

```
1160 PRINT:STORE:M(I,J),P(I,J)
1165 NEXT J
```

The program is then run. The data given on p. 82 will be printed in STORE in row-wise order, and only the first two lines of each section will be printed. These data will then be read by the PHASEN program.

For BASIC compilers which do not have the capability of printing on a file, it will be necessary to type in the RFLC data manually and to alter the PHASEN program. The latter effect is accomplished by changing line 360 of the PHASEN program to read

```
360 READ M, P
```

and by entering the RFLC data in DATA statements. These statements may be placed anywhere in the PHASEN program, but care must be taken to ensure that the data are typed in row-wise order. As an example, the following statements might be employed:

```
91 DATA 3.41177E-7,  2.23022
92 DATA 2.94307E-7,  2.21858
.
.
.
96 DATA 3.51116E-7,  2.1896
.
.
.
```

etc., until all 15 data pairs are entered. The DATA statements need not be numbered consecutively, but they must appear in the order given above.

Having generated the mutual inductance data by running the RFLC program, we now must calculate the normalized impedances of driver and pickup coils. This is accomplished by running the CLAD1 program (see p. 71). The sample calculation provided in the description of CLAD1 is again just that necessary for the present example; thus, we may use the data on pp. 70, 71.

To avoid the labor of typing in this data, the CLAD1 program may be altered to print on a file. Suppose this file is to be named STORE2. We first save an empty file by this name. Then we call up the CLAD1 program and type

```
1250 FOR I = 1 TO 3
1260 FOR J = 0 TO 4
1270 PRINT:  STORE2:  -N(J)/I9, B(J)/I9
1280 PRINT:  STORE2:  -M(J)/I0, C(J)/I0
1290 PRINT:  STORE2:  -Q(J)/I0, D(J)/I0
1300 NEXT J
1310 NEXT I
```

The program is then run. The data given on pp. 70, 71 will be printed in STORE2 column-wise order and read by the PHASEN program.

Note that the instructions given in lines 1250–1310 will cause the same data to be printed three times. This is due to the fact that the CLAD1 calculations are performed for a single clad thickness rather than for the three values actually given; thus, the data are repeated twice to provide the required number of data points. As explained in the description of the CLAD1 program, this procedure saves computer time with little loss in accuracy.

For BASIC compilers which do not have the capability of printing on a file, it will again be necessary to type in the data manually and to alter the PHASEN program. The latter effect is accomplished by changing lines 470, 480, and 490 of the PHASEN program to read

```
470 READ R(I,J), I(I,J)
480 READ S(I,J), J(I,J)
490 READ T(I,J), K(I,J)
```

and by entering the CLAD1 data in DATA statements. Care must be taken to ensure that the data are typed in column-wise order and that all CLAD1 DATA statements follow those due to RFLC. As an example, the following statements might be employed:

```
261 DATA 5.99304E-2,  .88838
262 DATA 5.67095E-2,  .938451
263 DATA 1.4727E-3,   .996125
264 DATA 5.22041E-2,  .899672
```

etc. The 15 data pairs on pp. 70, 71 are typed in this manner and then repeated twice, making a total of 45 lines of CLAD1 data. The advantage of having the programs print on a file thus becomes obvious.

Having provided the PHASEN program with the necessary data from RFLC and CLAD1, the parameters of the bridge circuit may be entered. Suppose we wish to evaluate the effect of a 1% change in each of the various elements of the circuit. Then the fractional changes S0 through S8 are all equal to 0.01. Furthermore, suppose

dc resistance of the driver coil = 13.48 Ω

dc resistance of the pickup coil = 0.487 Ω

Internal resistance of voltage source = 0.1 Ω

Input resistance of the amplifier = 100,000 Ω

Capacitance of the driver circuit = 75 pF

Capacitance of the pickup circuit = 75 pF

Driver inductance = 2.835 mH

Pickup inductance = 21.41 μH

Applied voltage = 10 V

Number of turns on driver coil = 627

Number of turns on pickup coil = 72

Amplifier gain = 1000

Mean radius of the driver coil = 6.35×10^{-3} m

Frequency = 100,000 sec^{-1}

External series resistance added to driver coil = 0

This information is typed into the program using the following format:

```
20 LET S0 = 0.01
30 LET S1 = 0.01
40 LET S2 = 0.01
50 LET S3 = 0.01
60 LET S4 = 0.01
70 LET S5 = 0.01
80 LET S6 = 0.01
90 LET S7 = 0.01
100 LET S8 = 0.01
110 LET R0 = 13.48
120 LET R1 = 0.487
130 LET R2 = 0.487
140 LET R3 = 0.1
150 LET R4 = 1E-5
160 LET C1 = 7.5E-11
170 LET C2 = 7.5E-11
180 LET L0 = 2.835E-3
190 LET L1 = 2.141E-5
200 LET L2 = 2.141E-5
210 LET V0 = 10
220 LET N = 627
```

```
230 LET N1 = 72
240 LET G = 1E-3
250 LET R = 6.35E-3
260 LET F = 1E-5
430 LET R5 = 0
```

The program is now run with the following results:

```
DRIVER RES        PICKUP RES        AMP INPUT RES       VOLTAGE
  13.48              .487              100000              10
DRIVER IND        PICKUP IND        GAIN                FREQUENCY
 .002835           2.141E-5           1000               100000
DRIVER SERIES RESISTANCE IS 0
V2                % OF RANGE                          DRIFTS
 63.4988            8.62631          8.52916E-5  2.25438E-7  2.59772E-6
                                     1.70993E-3  9.12737E-5  4.71482E-8
                                     2.78463E-6  1.64554E-3  2.51373E-6
PHASE SHIFT  8.07678E-2   RMS DRIFT  2.3764E-3  % IS 2.94226
```

from which we see that the phase shift due to a 1% change in resistance of the driver coil is 8.52916E-5 radians, that due to a 1% change in resistance of the pickup coil is 2.25438E-7 radians, etc. The average phase shift due to the specified variation in thickness is 8.07678E-2 radians, and the RMS value of all nine drifts is 2.3764E-3 radians, the latter value being 2.94226% of the former. The voltage delivered to the discriminator is 63.4988 V, and the phase shift due to the specified variation in lift-off is 8.62631% of the phase shift due to the specified variation in thickness.

PHASEN Program

```
10 REM          PHASEN            VERSIØN   01/20/70
20 S0=.01
30 S1=.01
40 S2=.01
50 S3=.01
60 S4=.01
70 S5=.01
80 S6=.01
90 S7=.01
100 S8=.01
110 R0=39.55
120 R1=1.2
130 R2=1.2
```

```
140 R3=.1
150 R4=1E5
160 C1=7.5E-11
170 C2=7.5E-11
180 L0=3.2E-3
190 L1=2.3E-5
200 L2=2.3E-5
210 V0=10
220 N=575
230 N1=65
240 G=1000
250 R=5.08E-3
260 F=400
270 PRINT"DRIVER RES","PICKUP RES","AMP INPUT RES","VØLTAGE"
280 PRINT R0,R1,R4,V0
290 PRINT
300 PRINT"DRIVER IND","PICKUP IND","GAIN","FREQUENCY"
310 PRINT L0,L1,G,F
320 PRINT
330 PRINT
340 FØR I=1 TØ 3
350 FØR J=1 TØ 5
360 INPUT:STØRE:M,P
370 A=(M*N*N1*R)/(2*PI)
380 M(I,J)=A*SIN(P)
390 P(I,J)=-(A*CØS(P))
400 NEXT J
410 NEXT I
420 W=2*PI*F
430 R5=1E3*W*L0
440 R6=R0+R5
450 FØR I=1 TØ 3
460 FØR J=1 TØ 5
470 INPUT:STØRE2:R(I,J),I(I,J)
480 INPUT:STØRE2:S(I,J),J(I,J)
490 INPUT:STØRE2:T(I,J),K(I,J)
500 NEXT J
510 NEXT I
520 GØ SUB 1580
530 V2=B(2,1)
540 Ø2=B(2,5)*SIN(D(2,5))-B(2,1)*SIN(D(2,1))
550 Ø3=B(2,1)*CØS(D(2,1))-B(2,5)*CØS(D(2,5))
560 Ø1=ATN(Ø2/Ø3)
570 IF Ø3<0 THEN 590
580 GØ TØ 600
590 Ø1=Ø1+PI
600 V1=B(2,1)*SIN(Ø1+D(2,1))
610 GØ SUB 1910
620 FØR I=1 TØ 3
630 FØR J=1 TØ 5
640 Q(I,J)=G(I,J)
650 NEXT J
```

```
660 NEXT I
670 FØR I=1 TØ 3
680 Q1=G(I,1)
690 Q2=Q1
700 FØR J=2 TØ 5
710 IF G(I,J)<Q1 THEN 730
720 Q1=G(I,J)
730 IF G(I,J)>Q2 THEN 750
740 Q2=G(I,J)
750 NEXT J
760 C(I)=ABS(Q1-Q2)
770 N(I)=(Q1+Q2)/2
780 NEXT I
790 Q8=C(1)
800 FØR I=2 TØ 3
810 Q9=C(I)
820 IF Q9<Q8 THEN 840
830 Q8=Q9
840 NEXT I
850 Q3=N(1)-N(3)
860 IF S0=0 THEN 930
870 R6=R6*(1+S0)
880 GØ SUB 1580
890 GØ SUB 1910
900 GØ SUB 1990
910 T0=Q4
920 R6=R6/(1+S0)
930 IF S1=0 THEN 1000
940 R1=R1*(1+S1)
950 GØ SUB 1580
960 GØ SUB 1910
970 GØ SUB 1990
980 T1=Q4
990 R1=R1/(1+S1)
1000 IF S2=0 THEN 1070
1010 R4=R4*(1+S2)
1020 GØ SUB 1580
1030 GØ SUB 1910
1040 GØ SUB 1990
1050 T2=Q4
1060 R4=R4/(1+S2)
1070 IF S3=0 THEN 1140
1080 V0=V0*(1+S3)
1090 GØ SUB 1580
1100 GØ SUB 1910
1110 GØ SUB 1990
1120 T3=Q4
1130 V0=V0/(1+S3)
1140 IF S4=0 THEN 1210
1150 W=W*(1+S4)
1160 GØ SUB 1580
1170 GØ SUB 1910
```

```
1180 GØ SUB 1990
1190 T4=Q4
1200 W=W/(1+S4)
1210 IF S5=0 THEN 1280
1220 C1=C1*(1+S5)
1230 GØ SUB 1580
1240 GØ SUB 1910
1250 GØ SUB 1990
1260 T5=Q4
1270 C1=C1/(1+S5)
1280 IF S6=0 THEN 1350
1290 C2=C2*(1+S6)
1300 GØ SUB 1580
1310 GØ SUB 1910
1320 GØ SUB 1990
1330 T6=Q4
1340 C2=C2/(1+S6)
1350 IF S7=0 THEN 1420
1360 LO=LO*(1+S7)
1370 GØ SUB 1580
1380 GØ SUB 1910
1390 GØ SUB 1990
1400 T7=Q4
1410 LO=LO/(1+S7)
1420 IF S8=0 THEN 1490
1430 L1=L1*(1+S8)
1440 GØ SUB 1580
1450 GØ SUB 1910
1460 GØ SUB 1990
1470 T8=Q4
1480 L1=L1/(1+S8)
1490 Q6=T0*T0+T1*T1+T2*T2+T3*T3+T4*T4+T5*T5+T6*T6+T7*T7+T8*T8
1500 Q7=SQR(Q6)
1510 PRINT"DRIVER SERIES RESISTANCE IS";R5
1520 PRINT"V2","% ØF RANGE","  ","DRIFTS"
1530 PRINT V2,100*Q8/Q3,T0,T1,T2
1540 PRINT"  ","  ",T3,T4,T5
1550 PRINT"  ","  ",T6,T7,T8
1560PRINT"PHASE SHIFT";Q3;"   RMS DRIFT";Q7;"   % IS";100*Q7/Q3
1570 GØ TØ 2130
1580 FØR I=1 TØ 3
1590 FØR J=1 TØ 5
1600 A1=R3/(1+(W*C1*R3)↑2)
1610 B1=-W*C1*R3*A1
1620 A2=R4/(1+(W*C2*R4)↑2)
1630 B2=-W*C2*R4*A2
1640 A3=A2+W*L1*S(I,J)+W*L2*T(I,J)+R1+R2
1650 B3=B2+W*L1*J(I,J)+W*L2*K(I,J)
1660 G1=M(I,J)↑2-P(I,J)↑2
1670 G2=2*M(I,J)*P(I,J)
1680 K1=R6+W*LO*R(I,J)+W*W*(G1*A3+G2*B3)/(A3*A3+B3*B3)
1690 K2=W*LO*I(I,J)+W*W*(G2*A3-G1*B3)/(A3*A3+B3*B3)
1700 G3=K1*A1-K2*B1
1710 G4=K1*B1+K2*A1
1720 V(I,J)=(VO/R3)*(G3*(K1+A1)+G4*(K2+B1))/((K1+A1)↑2+(K2+B1)↑2)
1730 W(I,J)=(VO/R3)*(G4*(K1+A1)-G3*(K2+B1))/((K1+A1)↑2+(K2+B1)↑2)
```

```
1740 A4=(A3*M(I,J)+B3*P(I,J))/(A3*A3+B3*B3)
1750 B4=(A3*P(I,J)-B3*M(I,J))/(A3*A3+B3*B3)
1760 Z1=A1*A2-B1*B2
1770 Z2=A1*B2+B1*A2
1780 A5=(Z1*(A1+K1)+Z2*(B1+K2))/((A1+K1)↑2+(B1+K2)↑2)
1790 B5=(Z2*(A1+K1)-Z1*(B1+K2))/((A1+K1)↑2+(B1+K2)↑2)
1800 U(I,J)=(V0/R3)*W*G*(A4*B5+B4*A5)
1810 Y(I,J)=-(V0/R3)*W*G*(A4*A5-B4*B5)
1820 D(I,J)=ATN(Y(I,J)/U(I,J))
1830 IF U(I,J)<0 THEN 1850
1840 GØ TØ 1860
1850 D(I,J)=D(I,J)+PI
1860 A(I,J)=SQR(V(I,J)↑2+W(I,J)↑2)
1870 B(I,J)=SQR(U(I,J)↑2+Y(I,J)↑2)
1880 NEXT J
1890 NEXT I
1900 RETURN
1910 FØR I=1 TØ 3
1920 FØR J=1 TØ 5
1930 G(I,J)=Ø1-ATN(V1/SQR(B(I,J)↑2-V1*V1))+D(I,J)
1940 IF ABS(G(I,J))<PI THEN 1960
1950 G(I,J)=G(I,J)-SGN(G(I,J))*2*PI
1960 NEXT J
70 NEXT I
1980 RETURN
1990 FØR I=1 TØ 3
2000 FØR J=1 TØ 5
2010 L(I,J)=G(I,J)-Q(I,J)
2020 NEXT J
2030 NEXT I
2040 Q4=ABS(L(1,1))
2050 FØR I=1 TØ 3
2060 FØR J=1 TØ 5
2070 Q5=ABS(L(I,J))
2080 IF Q5<Q4 THEN 2100
2090 Q4=Q5
2100 NEXT J
2110 NEXT I
2120 RETURN
2130 END
```

ACCURACY OF CALCULATIONS

In this section we shall discuss the accuracy with which these programs calculate the integrals presented in a previous report.[12] There

[12] C. V. Dodd, W. E. Deeds, J. W. Luquire, and W. G. Spoeri, Some Eddy-Current Problems and Their Integral Solutions, ORNL-4384 (1969).

are three main sources of error in the numerical evaluation of these integrals: (1) the accuracy of the approximation of the various functions in the integrands, (2) the step size in the numerical evaluation of the integral, and (3) the convergence of the integrals.

Approximation of Functions

We approximated the following functions which were not standard functions in the BASIC language:

$J_1(x)$, $\int xJ_1(x)dx$, $I_1(z)$ $\int xI_1(x)dx$, $I_0(z)$

$K_1(z)$, $\int xK_1(x)dx$, $K_0(z)$

J_1 is a first-order Bessel function of the first kind, and I_1 and K_1 are first-order modified Bessel functions of the first and second kind, respectively. The argument x is a real number, and z is a complex number. We shall now discuss the accuracy of each of these approximations.

Discussion of $J_1(x)$

The approximation for $J_1(x)$ is taken from the Handbook of Mathematical Functions,[13] Eqs. 9.4.4 and 9.4.6. For x = 0 to 3 we use the approximation:

$$J_1(x) = \frac{1}{2}x - (6.25E\text{-}2)x^3 + (2.60415E\text{-}3)x^5 - (5.42443E\text{-}5)x^7 + (6.757E\text{-}7)x^9 - (5.38E\text{-}9)x^{11} + (2.1E\text{-}11)x^{13} \quad .$$

The reported error is less than 1.3E-8. For x between 3 and infinity we use the approximation:

$$J_1(x) = \frac{Q_3}{x^{\frac{1}{2}}} \cos(Q_4) \ ,$$

[13]National Bureau of Standards, Handbook of Mathematical Functions, p. 370, U.S. Government Printing Office, Washington, D. C., 1964.

where

$$Q_3 = 0.79788456 + (4.68E\text{-}6)/x + 0.14937/x^2 + (4.61835E\text{-}3)/x^3$$
$$- 0.20210391/x^4 + 0.27617679/x^5 - 0.14604057/x^6$$

and

$$Q_4 = x - 2.35619449 + 0.37498836/x + (5.085E\text{-}4)/x^2 - 0.17222733/x^3$$
$$+ (6.022188E\text{-}2)/x^4 + 0.19397232/x^5 - 0.21262014/x^6 \quad .$$

The reported error is less than 9E-8.

<u>Discussion of $\int_0^x xJ_1(x)dx$</u>

This range of integration was divided into two regions. To approximate the integral from 0 to 5, we use the series representation[13] (Eq. 9.1.10) for $J_1(x)$, multiply by x, and integrate term by term with respect to x.

$$\int_0^x xJ_1(x)dx = \sum_{n=0}^{\infty} (-1)^n \left(\frac{1}{2}\right)^{2n+1} \frac{x^{2n+3}}{n!(n+1)!(2n+3)}$$

We take 2x+3 terms in the approximation.

For the region between 5 and infinity we use the approximation:

$$\int_0^x xJ_1(x)dx = 1 - \sqrt{x}\ [Q_2 \cos(x - \pi/4) - Q_1 \sin(x - \pi/4)] \quad ,$$

where the coefficients,

$$Q_2 = 0.7979095 - (0.187344E\text{-}2)/x + 0.4952024/x^2 - 0.6896196/x^3$$
$$+ 2.105874/x^4 - 5.817517/x^5$$

and

$$Q_1 = -(0.064109E\text{-}3) + 0.7034845/x - 0.1730503/x^2 + 2.050931/x^3$$
$$- 23.79333/x^4 + 109.1142/x^5 - 188.1357/x^6 \quad ,$$

have been determined by a least-squares fit. The "actual value" was calculated by numerical integration of $xJ_1(x)$ and agrees with values calculated from National Bureau of Standards tables to within ±1E-8.

X	APPROXIMATION	ACTUAL VALUE	DIFFERENCE
0.5	0.204456E-01	0.204456E-01	0.3410605E-12
1	0.15453272	0.15453272	0.0909494E-11
1.5	0.473708	0.473708	0.1273292E-10
2	0.97798873	0.97798873	-0.3637978E-11
2.5	1.5889403	1.5889403	0.2910383E-10
3	2.1677231	2.1677231	0.2910383E-10
3.5	2.5537528	2.5537528	0.2910383E-10
4	2.6133333	2.6133333	0.1455191E-10
4.5	2.2843038	2.2843038	0.1455191E-10
5	1.6032957	1.6032957	0.0727595E-10
5.5	0.70655645	0.70655573	-0.0719424E-05
6	-0.19765044	-0.10765039	0.4333287E-07
6.5	-0.87913766	-0.87913832	-0.0661486E-05
7	-1.1459147	-1.1459147	0.1809094E-06
7.5	-0.89837738	-0.89837617	0.1211148E-05
8	-0.16246094	-0.16245976	0.1174163E-05
8.5	0.90846388	0.90846427	0.3920904E-06
9	2.065269	2.0652688	-0.1579173E-06
9.5	3.0217648	3.0217649	0.0818108E-06
10	3.526368	3.5263689	0.0933519E-05
10.5	3.4286108	3.4286126	0.1799518E-05
11	2.7228899	2.7228921	0.2154891E-05
11.5	1.5570277	1.5570296	0.1853659E-05
12	0.20184917	0.2018503	0.1133443E-05
12.5	-1.0120725	-1.0120721	0.4056128E-06
13	-1.775617	-1.775617	0.0633735E-07
13.5	-1.8801856	-1.8801856	0.4095636E-07
14	-1.2743509	-1.2743509	0.3716413E-06
14.5	-0.0828132	-0.08281247	0.0730123E-05
15	1.4185281	1.4185289	0.0868487E-05
15.5	2.8665793	2.86658	0.0673477E-05
16	3.8992502	3.8992504	0.2041342E-06
16.5	4.2463153	4.2463149	-0.3473251E-06
17	3.8000754	3.8000746	-0.0846717E-05
17.5	2.647369	2.6473679	-0.1120075E-05
18	1.0537113	1.0537101	-0.115321E-05
18.5	-0.597843	-0.59784403	-0.1029275E-05
19	-1.8990298	-1.8990306	-0.0873602E-05
19.5	-2.5175747	-2.5175755	-0.0777552E-05
20	-2.282114	-2.2821147	-0.0747525E-05
20.5	-1.2291259	-1.2291267	-0.071802E-05
21	0.40084917	0.4008486	-0.5746023E-06
21.5	2.2180202	2.2180199	-0.2416927E-06
22	3.7767232	3.7767235	0.2741726E-06
22.5	4.6849525	4.6849534	0.0864063E-05

X	APPROXIMATION	ACTUAL VALUE	DIFFERENCE
23	4.7030693	4.7030707	0.1347827E-05
23.5	3.8068092	3.8068108	0.1541149E-05
24	2.1980817	2.198083	0.1335603E-05
24.5	0.25973223	0.25973298	0.0753498E-05
25	−1.5356547	−1.5356547	−0.4289904E-07
25.5	−2.7411629	−2.7411637	−0.0804589E-05
26	−3.0469315	−3.0469327	−0.1279477E-05
26.5	−2.3597314	−2.3597327	−0.1319582E-05
27	−0.83031503	−0.83031598	−0.0948286E-05
27.5	1.1792652	1.1792648	−0.3639288E-06
28	3.1813856	3.1813857	0.1216831E-06
28.5	4.6813188	4.681319	0.2125743E-06
29	5.2996209	5.2996206	−0.2395245E-06
29.5	4.8681301	4.8681289	−0.1147825E-05
30	3.475291	3.4752888	−0.2178421E-05

The error in the approximation is about ±2E-6 or less between 0 and 30. For greater values of x, the error is slightly larger, although the integral approximations have usually converged before x reaches 30.

In the program AIRCO, which is somewhat slower to converge, we use a third approximation between 30 and infinity. It has the same form as used before:

$$\int_0^x xJ_1(x)dx = 1 + \sqrt{\frac{2}{\pi x}}\,[P_1\cos(x - \pi/4) + P_2\sin(x - \pi/4)] \ ,$$

where the coefficients $P_1 = -x - 0.5546875/x + 2.48062114/x^3$ and $P_2 = 0.875 - 0.93457031/x^2 + 8.98975114/x^4$ have been determined by a least squares fit. The error in this approximation is less than 1E-6.

Discussion of $\int_0^x xI_1(x)dx$

This integral was also divided into integrals over two regions. To approximate the integral from 0 to 5, we use the series representation[13] (Eq. 9.6.10) for $I_1(x)$, multiply by x, and integrate term by term with respect to x:

$$\int_0^x xI_1(x)dx = \sum_{n=0}^{15} \left(\frac{1}{2}\right)^{1+2n} \frac{x^{2n+3}}{n!(n+1)!(2n+3)} \ .$$

We take L5 terms in the series where $L5 = 20 + \left(1 - e^{-x/10}\right) + 4$. For the region between 5 and infinity, we use the following approximation:

$$\int_0^\infty xI_1(x)dx = P_3 x^{\frac{1}{2}} e^x ,$$

where the coefficient $P_3 = 0.3987795 - 0.3360836/x - 0.6130935/x^2 + 5.108402/x^3 - 33.78366/x^4 + 11.81804/x^5 + 543.6694/x^6 - 1737.556/x^7 + 1660.794/x^8$ has been determined by a least-squares fit.

The variation between the approximation and the "actual value" is shown in the following tabulation. The "actual value" was calculated by numerical integration of $xI_1(x)$ and agrees with values calculated from seven-place tables.[14]

X	"ACTUAL VALUE"	APPROXIMATION	DIFFERENCE	DIFFERENCE/ "ACTUAL VALUE"
0.5	0.2122687E-01	0.2122687E-01	−0.6232312E-09	−0.294E-07
1	0.17954477	0.17954478	−0.0702584E-07	−0.391E-07
1.5	0.66401539	0.66401541	−0.2136584E-07	−0.322E-07
2	1.7841686	1.7841686	−0.462096E-07	−0.259E-07
2.5	4.0764673	4.0764675	−0.1673761E-06	−0.411E-07
3	8.4814158	8.4814162	−0.399712E-06	−0.471E-07
3.5	16.644762	16.644763	−0.0825617E-05	−0.496E-07
4	31.432477	31.432478	−0.1491745E-05	−0.475E-07
4.5	57.811153	57.811157	−0.4028668E-05	−0.0697E-06
5	104.35068	104.35069	−0.0853184E-04	−0.0818E-06
5.5	185.78408	185.78496	−0.0883081E-02	−0.47533E-05
6	327.36	327.36114	−0.1143995E-02	−0.34946E-05
6.5	572.23069	572.23054	0.1523569E-03	0.2663E-06
7	993.97292	993.96971	0.3207929E-02	0.32274E-05
7.5	1717.7781	1717.7708	0.0734394E-01	0.42753E-05
8	2956.269	2956.2582	0.1085959E-01	0.36734E-05
8.5	5069.9682	5069.9573	0.1093128E-01	0.21561E-05
9	8669.2788	8669.2752	0.3615498E-02	0.417E-06
9.5	14786.309	14786.325	−0.1590186E-01	−0.10754E-05
10	25164.12	25164.173	−0.5256569E-01	−0.20889E-05
10.5	42743.237	42743.346	−0.10980105	−0.25689E-05
11	72479.343	72479.53	−0.18637943	−0.25715E-05
11.5	122716.63	122716.9	−0.27078056	−0.22066E-05
12	207492.91	207493.25	−0.33177948	−0.1599E-05
12.5	350406.21	350406.51	−0.30313491	−0.08651E-05

[14] L. N. Karmazine and E. A. Cistova, Tables of Bessel Functions of Imaginary Argument and Their Integrals (in Russian), Moscow, 1958.

X	"ACTUAL VALUE"	APPROXIMATION	DIFFERENCE	DIFFERENCE/ "ACTUAL VALUE"
13	591096.98	591097.04	−0.5995178E-01	−0.1014E-06
13.5	996109.6	996108.98	0.61592102	0.6183E-06
14	1.6770822E+06	1.6770801E+06	2.0863723	0.1244E-05
14.5	2.8211956E+06	2.8211907E+06	4.9243621	0.17455E-05
15	4.74212E+06	4.74211E+06	9.9997863	0.21087E-05
15.5	7.9652235E+06	7.9652049E+06	18.574401	0.23319E-05
16	1.3370026E+07	1.3369994E+07	32.384155	0.24221E-05
16.5	2.2428269E+07	2.2428215E+07	53.514404	0.2386E-05
17	3.7601638E+07	3.7601554E+07	84.590332	0.22496E-05
17.5	6.3005982E+07	6.3005854E+07	127.91943	0.20303E-05
18	1.0552023E+08	1.0552004E+08	184.25976	0.17462E-05
18.5	1.7663717E+08	1.7663692E+08	250.09277	0.14159E-05
19	2.9555155E+08	2.9555124E+08	312.30273	0.10567E-05
19.5	4.9431117E+08	4.9431083E+08	338.29492	0.06844E-05
20	8.2640693E+08	8.2640667E+08	259.04687	0.3135E-06
20.5	1.3810941E+09	1.3810942E+09	−59.710937	−0.432E-07
21	2.307263E+09	2.3072638E+09	−864.45312	−0.3747E-06
21.5	3.8532169E+09	3.8532195E+09	−2587.9687	−0.06716E-05
22	6.432944E+09	6.4329499E+09	−5959	−0.09263E-05
22.5	1.0736505E+10	1.0736517E+10	−12154.562	−0.11321E-05
23	1.7913864E+10	1.7913887E+10	−22997.125	−0.12838E-05
23.5	2.9880974E+10	2.9881015E+10	−41173	−0.13779E-05
24	4.9829313E+10	4.9829383E+10	−70311.75	−0.14111E-05
24.5	8.3073949E+10	8.3074064E+10	−114742.5	−0.13812E-05
25	1.3846482E+11	1.38465E+11	−178234	−0.12872E-05
25.5	2.3073483E+11	2.3073509E+11	−260375	−0.11285E-05
26	3.8440606E+11	3.844064E+11	−347820	−0.09048E-05
26.5	6.4028688E+11	6.4028727E+11	−394904	−0.6168E-06
27	1.0662769E+12	1.0662772E+12	−282428	−0.2649E-06
27.5	1.7753336E+12	1.7753333E+12	264592	0.149E-06
28	2.955342E+12	2.9553402E+12	1.845152E+06	0.6243E-06
28.5	4.9187696E+12	4.9187639E+12	5.700768E+06	0.1159E-05
29	8.1851962E+12	8.1851818E+12	1.4332672E+07	0.1751E-05
29.5	1.3618472E+13	1.3618439E+13	3.26672E+07	0.23987E-05
30	2.2654628E+13	2.2654558E+13	7.0231808E+07	0.31001E-05

The error is equally small for values greater than 30, although most of the integrals have converged before 30.

Discussion of $\int_0^x xK_1(x)dx$

This integral was also divided into integrals over two regions. To approximate the integral from 0 to 5, we use the series representation (Eq. 9.6.11), multiply by x, and integrate each term with respect to x. We obtain:

$$\int_0^x xK_1(x)dx = x + \sum_{n=0}^{L5} \frac{x^{2n+3}}{2^{2n+1}\, n!(n+1)!(2n+3)} \left[\ln (x/2) - \frac{1}{2n+3} \right.$$

$$\left. + 0.577215665 - \left(1 + \frac{1}{2} + \frac{1}{3} + \ldots \frac{1}{n} + \frac{1}{2n+2}\right)\right] .$$

We take L5 terms in the series where $L5 = 20\left(1 - e^{-x/10}\right) + 4$.

For the region between 5 and infinity we use the following approximation:

$$\int_0^x xK_1(x)dx = \frac{\pi}{2} - \sqrt{x}\ e^{-x}\ P_4 ,$$

where $P_4 = 1.2533263 + 1.0958276/x - 0.67491295/x^2 + 0.91571421/x^3 - 1.1768576/x^4 + 0.79898397/x^5$ has been determined by a least-squares fit.

Since the value of this integral converges to $\pi/2$ at infinity and we actually use the difference of two such integrals, we have subtracted $\pi/2$ from the approximation in the program. In the following tabulation we give values of $\pi/2 - \int_0^x xK_1(x)dx$ as these are easier to compare.

X	"ACTUAL VALUE"	APPROXIMATION	DIFFERENCE	DIFFERENCE/ "ACTUAL VALUE"
0.5	1.1059033	1.1059033	0.218287E-10	0.2E-10
1	0.74931091	0.74931091	0.4365574E-10	0.6E-10
1.5	0.4969222	0.4969222	0.0727595E-09	0.15E-09
2	0.32490833	0.32490833	0.0873114E-09	0.27E-09
2.5	0.21029136	0.21029136	0.0800355E-09	0.38E-09
3	0.13506675	0.13506675	0.5820766E-10	0.43E-09
3.5	0.08623054	0.08623054	0.0960426E-08	0.1114E-07
4	0.5478545E-01	0.5478545E-01	0.5529727E-09	0.1009E-07
4.5	0.3466817E-01	0.3466817E-01	0.327418E-09	0.0944E-07
5	0.2186441E-01	0.2186441E-01	0.4816683E-08	0.2203E-06
5.5	0.1375002E-01	0.1374999E-01	0.2589445E-07	0.188323E-05
6	0.0862574E-01	0.0862573E-01	0.0805027E-07	0.093329E-05
6.5	0.5399539E-02	0.5399535E-02	0.3622602E-08	0.067091E-05
7	0.3373622E-02	0.337362E-02	0.1857699E-08	0.55065E-06
7.5	0.2104306E-02	0.2104305E-02	0.0942506E-08	0.44789E-06
8	0.1310607E-02	0.1310606E-02	0.4552447E-09	0.34735E-06
8.5	0.0815179E-02	0.0815179E-02	0.208935E-09	0.25631E-06
9	0.5064157E-03	0.5064156E-03	0.0923456E-09	0.18235E-06
9.5	0.3142559E-03	0.3142559E-03	0.4061284E-10	0.12923E-06

X	"ACTUAL VALUE"	APPROXIMATION	DIFFERENCE	DIFFERENCE/ "ACTUAL VALUE"
10	0.1948157E-03	0.1948157E-03	0.1897326E-10	0.09739E-06
10.5	0.1206607E-03	0.1206607E-03	0.102629E-10	0.08506E-06
11	0.0746691E-03	0.0746691E-03	0.0668354E-10	0.08951E-06
11.5	0.4617194E-04	0.461719E-04	0.4966693E-11	0.10757E-06
12	0.2853005E-04	0.2853004E-04	0.3883671E-11	0.13613E-06
12.5	0.1761719E-04	0.1761719E-04	0.3036126E-11	0.17234E-06
13	0.1087178E-04	0.1087178E-04	0.232353E-11	0.21372E-06
13.5	0.0670522E-04	0.0670522E-04	0.1731087E-11	0.25817E-06
14	0.4133235E-05	0.4133234E-05	0.1256023E-11	0.30388E-06
14.5	0.2546516E-05	0.2546515E-05	0.089001E-11	0.3495E-06
15	0.1568178E-05	0.1568177E-05	0.6176448E-12	0.39386E-06
15.5	0.0965271E-05	0.0965271E-05	0.4209618E-12	0.43611E-06
16	0.5939093E-06	0.5939091E-06	0.2824546E-12	0.47559E-06
16.5	0.3652727E-06	0.3652725E-06	0.1869459E-12	0.5118E-06
17	0.2245692E-06	0.2245691E-06	0.1222615E-12	0.54443E-06
17.5	0.1380155E-06	0.1380155E-06	0.0791129E-12	0.57322E-06
18	0.0847927E-06	0.0847926E-06	0.5071247E-13	0.59808E-06
18.5	0.5207738E-07	0.5207735E-07	0.3223202E-13	0.61893E-06
19	0.3197471E-07	0.3197469E-07	0.2033009E-13	0.063582E-05
19.5	0.1962625E-07	0.1962624E-07	0.1273265E-13	0.064876E-05
20	0.1204335E-07	0.1204335E-07	0.0792275E-13	0.065785E-05
20.5	0.0738826E-07	0.0738825E-07	0.4899943E-14	0.066321E-05
21	0.4531344E-08	0.4531341E-08	0.3013214E-14	0.066497E-05
21.5	0.2778475E-08	0.2778473E-08	0.1842953E-14	0.06633E-05
22	0.1703276E-08	0.1703275E-08	0.1121315E-14	0.065833E-05
22.5	0.1043919E-08	0.1043918E-08	0.0678791E-14	0.065023E-05
23	0.063967E-08	0.063967E-08	0.4088661E-15	0.063918E-05
23.5	0.3918833E-09	0.3918831E-09	0.2450567E-15	0.062533E-05
24	0.2400334E-09	0.2400333E-09	0.1461453E-15	0.60885E-06
24.5	0.1469957E-09	0.1469956E-09	0.0867124E-15	0.5899E-06
25	0.0900033E-09	0.0900032E-09	0.5117688E-16	0.56861E-06
25.5	0.5509805E-10	0.5509802E-10	0.3003811E-16	0.54518E-06
26	0.3372412E-10	0.337241E-10	0.175268E-16	0.51971E-06
26.5	0.2063832E-10	0.2063831E-10	0.1016153E-16	0.49236E-06
27	0.1262815E-10	0.1262815E-10	0.5850297E-17	0.46327E-06
27.5	0.0772573E-10	0.0772573E-10	0.3341809E-17	0.43256E-06
28	0.4725805E-11	0.4725803E-11	0.1891953E-17	0.40035E-06
28.5	0.289035E-11	0.2890349E-11	0.1059969E-17	0.36673E-06
29	0.1767525E-11	0.1767524E-11	0.586557E-18	0.33185E-06
29.5	0.1080745E-11	0.1080744E-11	0.3196755E-18	0.29579E-06
30	0.0660731E-11	0.0660731E-11	0.1708922E-18	0.25864E-06

The "actual value" agrees with values calculated from seven-place tables.[14] The error for values greater than 30 is similarly small.

Discussion of $I_0(Z)$, $I_1(Z)$, $K_0(Z)$, $K_1(Z)$

These functions are all calculated in a single subroutine. The approximations between 0 and 8 are calculated from the following series.[15]

$$I_0(Z) = \sum_{n=0}^{N} \frac{Z^{2n}}{2^{2n}\,(n!)(n!)} ,$$

$$I_1(Z) = \sum_{n=0}^{N} \frac{Z^{2n+1}}{2^{2n+1}\,n!(n+1)!} ,$$

$$K_0(Z) = \sum_{n=0}^{N} \frac{Z^{2n}}{2^{2n}\,(n!)(n!)} \left[\ell n\,(Z/2) + 0.577215665 - \left(1 + \frac{1}{2} + \frac{1}{3} + \ldots + \frac{1}{n}\right)\right] ,$$

$$K_1(Z) = \frac{1}{Z} + \sum_{n=0}^{N} \frac{Z^{2n+1}}{2^{2n+1}\,n!(n+1)!} \left[\ell n(Z/2) + 0.577215665 - \left(1 + \frac{1}{2} + \frac{1}{3} + \ldots + \frac{1}{n} + \frac{1}{2n+2}\right)\right] .$$

We take $N = 20\left(1 - e^{-|Z|/10}\right) + 4$ terms in the series.

For the functions between 8 and infinity we use Formula 157, p. 201 of ref. 15 for I_n, neglecting terms with the factor e^{-Z} and Formula 204, p. 204 for K_n.

$$I_1(Z) = \frac{e^{Z}}{\sqrt{2\pi Z}} \left[1 - \frac{(4-1^2)}{1!8Z} + \frac{(4-1^2)(4-3^2)}{2!(8Z)^2} - \ldots + \frac{(-1)^{n-1}\,(4-1^2)\,\ldots\,[4-(2n-3)^2]}{(n-1)!(8Z)^{n-1}}\right] ,$$

[15] N. W. McLachlan, Bessel Functions for Engineers, 2nd ed., Oxford, 1955.

$$I_0(Z) = \frac{e^Z}{\sqrt{2\pi z}} \left[1 - \frac{(-1)^2}{1!8Z} + \frac{(-1)^2(-3)^2}{2!(8Z)^2} - \ldots + \frac{(-1)^{n-1}\,(-1)^2 \ldots [-(2n-3)^2]}{(n-1)!(8Z)^{n-1}} \right] ,$$

$$K_1(Z) = \sqrt{\frac{\pi}{2Z}}\, e^{-Z} \left[1 + \frac{(4-1^2)}{1!8Z} + \frac{(4-1^2)(4-3^2)}{2!(8Z)^2} + \ldots + \frac{(4-1^2) \ldots [4-(2n-3)^2]}{(n-1)!(8Z)^{n-1}} \right] ,$$

$$K_0(Z) = \sqrt{\frac{\pi}{2Z}}\, e^{-Z} \left[1 + \frac{(-1)^2}{1!8Z} + \frac{(-1)^2(-3)^2}{2!(8Z)^2} + \ldots + \frac{(-1)^2 \ldots [-(2n-3)^2]}{(n-1)!(8Z)^{n-1}} \right] .$$

We take 3 + 20/x terms in each series. The "actual value" was calculated from seven-place tables from Table II of ref. 15 between 0 and 10 and interpolated from five-place reciprocal values (National Bureau of Standards Table 9.12) between 10 and 30. The following tabulation gives the values of these functions for $Z = xe^{i\pi/4}$.

I_0	MAG	PHASE	K_0	MAG	PHASE
I_1	MAG	PHASE	K_1	MAG	PHASE
x = 1					
APPROXIMATION	1.01552	0.248294	0.572032		-1.0458
"ACTUAL VALUE"	1.015525	0.248294	0.572032		-1.045803
APPROXIMATION	0.501301	0.91029	0.77887		-1.25487
"ACTUAL VALUE"	0.5013011	0.9102899	0.7788704		-1.2548657
x = 2					
APPROXIMATION	1.22901	0.912639	0.206644		4.50937
"ACTUAL VALUE"	1.229006	0.912639	0.206644		4.509372
APPROXIMATION	1.04117	1.27874	0.244293		4.37855
"ACTUAL VALUE"	1.0411672	1.2787396	0.2442934		4.3785449

x = 3				
APPROXIMATION	1.95019	1.68456	8.42993E-2	3.79316
"ACTUAL VALUE"	1.950193	1.684559	8.4299E-2	3.793160
APPROXIMATION	1.79991	1.84504	9.45153E-2	3.69776
"ACTUAL VALUE"	1.799908	1.8450429	9.451534E-2	3.6977643
x = 4				
APPROXIMATION	3.43912	2.41189	3.62456E-2	3.0809
"ACTUAL VALUE"	3.439118	2.411887	3.6246E-2	3.080902
APPROXIMATION	3.1729	2.51161	3.95299E-2	3.0058
"ACTUAL VALUE"	3.172896	2.5116109	3.95299E-2	3.0058023
x = 5				
APPROXIMATION	6.23116	3.12297	1.60525E-2	2.37047
"ACTUAL VALUE"	6.231163	3.122970	1.6052E-2	2.370473
APPROXIMATION	5.80906	3.20357	1.72129E-2	2.30854
"ACTUAL VALUE"	5.809060	3.2035660	1.721295E-2	2.3085387
x = 6				
APPROXIMATION	11.5008	3.83318	7.24598E-3	1.66104
"ACTUAL VALUE"	11.500794	3.833179	7.246E-3	1.661043
APPROXIMATION	10.8502	3.89998	7.6815E-3	1.60834
"ACTUAL VALUE"	10.850182	3.8999760	7.681504E-3	1.6083434
x = 7				
APPROXIMATION	21.5479	4.54298	3.31456E-3	0.95222
"ACTUAL VALUE	21.547863	4.542982	3.315E-3	0.952219
APPROXIMATION	20.5003	4.59912	3.48497E-3	0.906355
"ACTUAL VALUE"	20.500302	4.5991161	3.484972E-3	0.9063566
x = 8				
APPROXIMATION	40.8176	-1.03113	1.53106E-3	0.243824
"ACTUAL VALUE"	40.8174	-1.03114	1.53111E-3	0.243795
APPROXIMATION	39.0697	-0.982745	1.59991E-3	0.203194
"ACTUAL VALUE"	39.06966	-0.9827449	1.599890E-3	0.2031949
x = 9				
APPROXIMATION	77.9564	-0.322577	7.12627E-4	-0.464365
"ACTUAL VALUE"	77.9566	-0.32257	7.12628E-4	-0.464361
APPROXIMATION	74.9741	-0.279991	7.41044E-4	-0.500778
"ACTUAL VALUE"	74.97404	-0.2799960	7.410441E-4	-0.5007787
x = 10				
APPROXIMATION	149.847	0.385675	3.33666E-4	-1.17232
"ACTUAL VALUE"	149.847	0.385673	3.33665E-4	-1.17232
APPROXIMATION	144.671	0.423688	3.45627E-4	-1.20534
"ACTUAL VALUE"	144.67053	0.4236874	3.456272E-4	-1.2053372
x = 11				
APPROXIMATION	289.537	1.0937	1.56988E-4	4.40305
"ACTUAL VALUE"	289.535	1.09371	1.56989E-4	4.40305
APPROXIMATION	280.419	1.12803	1.621E-4	4.37285
"ACTUAL VALUE"	280.419	1.12802	1.62099E-4	4.3728

x = 12				
APPROXIMATION	561.844	1.80157	7.41599E-5	3.69535
"ACTUAL VALUE"	561.841	1.80157	7.41601E-5	3.69535
APPROXIMATION	545.591	1.83286	7.63713E-5	3.66753
"ACTUAL VALUE"	545.600	1.83286	7.63705E-5	3.6675
x = 13				
APPROXIMATION	1094.17	2.50931	3.51512E-5	2.98773
"ACTUAL VALUE"	1094.16	2.50931	3.51512E-5	2.98774
APPROXIMATION	1064.9	2.53806	3.6118E-5	2.96194
"ACTUAL VALUE"	1064.93	2.53803	3.61179E-5	2.9619
x = 14				
APPROXIMATION	2137.35	3.21696	1.67095E-5	2.28019
"ACTUAL VALUE"	2137.34	3.21696	1.67095E-5	2.28019
APPROXIMATION	2084.19	3.24355	1.7136E-5	2.25615
"ACTUAL VALUE"	2084.21	3.24347	1.71359E-5	2.2562
x = 15				
APPROXIMATION	4186.06	3.92453	7.96291E-6	1.5727
"ACTUAL VALUE"	4186.05	3.92453	7.96292E-6	1.57270
APPROXIMATION	4088.77	3.94926	8.15248E-6	1.55019
"ACTUAL VALUE"	4088.69	3.94927	8.15249E-6	1.5502
x = 16				
APPROXIMATION	8217.22	4.63204	3.80298E-6	0.865254
"ACTUAL VALUE"	8217.23	4.63204	3.80299E-6	0.86526
APPROXIMATION	8037.99	4.65516	3.88781E-6	0.844094
"ACTUAL VALUE"	8038.04	4.65517	3.88782E-6	0.8441
x = 17				
APPROXIMATION	16162.7	-0.943679	1.81973E-6	0.157849
"ACTUAL VALUE"	16162.7	-0.94369	1.81974E-6	0.15785
APPROXIMATION	15830.6	-0.921984	1.85792E-6	0.137884
"ACTUAL VALUE"	15830.6	-0.921995	1.85792E-6	0.1379
x = 18				
APPROXIMATION	31847.0	-0.236259	8.72224E-7	-0.549525
"ACTUAL VALUE"	31847.2	-0.23627	8.72224E-7	-0.549526
APPROXIMATION	31228.6	-0.215818	8.89503E-7	-0.568423
"ACTUAL VALUE"	31228.0	-0.215795	8.89516E-7	-0.5685
x = 19				
APPROXIMATION	62850.6	0.471127	4.18703E-7	-1.25687
"ACTUAL VALUE"	62851	0.471126	4.18703E-7	-1.25687
APPROXIMATION	61693.5	0.490451	4.26559E-7	-1.27481
"ACTUAL VALUE"	61693.4	0.490455	4.26549E-7	-1.2749
x = 20				
APPROXIMATION	124212	1.17848	2.01269E-7	4.31899
"ACTUAL VALUE"	124213	1.17849	2.01268E-7	4.31899
APPROXIMATION	122038	1.19681	2.04855E-7	4.30192
"ACTUAL VALUE"	122037	1.19681	2.04854E-7	4.3019

x = 21				
APPROXIMATION	245793	1.88582	9.6868E-8	3.61169
"ACTUAL VALUE"	245794	1.88582	9.68677E-8	3.61169
APPROXIMATION	241694	1.90324	9.8511E-8	3.5954
"ACTUAL VALUE"	241693	1.90324	9.85107E-8	3.5954
x = 22				
APPROXIMATION	486943	2.59313	4.66734E-8	2.9044
"ACTUAL VALUE"	486943	2.59313	4.66732E-8	2.90440
APPROXIMATION	479188	2.60973	4.74288E-8	2.88883
"ACTUAL VALUE"	479179	2.60976	4.74292E-8	2.8888
x = 23				
APPROXIMATION	965701	3.30042	2.25112E-8	2.19713
"ACTUAL VALUE"	965697	3.30042	2.24112E-8	2.19713
APPROXIMATION	950983	3.31628	2.28597E-8	2.18222
"ACTUAL VALUE"	950975	3.31628	2.28597E-8	2.1822
x = 24				
APPROXIMATION	1.91701E+6	4.0077	1.08676E-8	1.48987
"ACTUAL VALUE"	1.917E+6	4.0077	1.08676E-8	1.48988
APPROXIMATION	1.889E+6	4.02288	1.10288E-8	1.47556
"ACTUAL VALUE"	1.88899E+6	4.02292	1.10287E-8	1.4755
x = 25				
APPROXIMATION	3.8088E+6	-1.56822	5.25099E-9	0.782626
"ACTUAL VALUE"	3.80876E+6	-1.56823	5.25097E-9	0.78263
APPROXIMATION	3.77556E+6	-1.55367	5.32573E-9	0.768873
"ACTUAL VALUE"	3.75539E+6	-1.55367	5.32573E-9	0.7688
x = 26				
APPROXIMATION	7.57366E+6	-0.860973	2.53917E-9	7.53902E-2
"ACTUAL VALUE"	7.57359E+6	-0.86098	2.53916E-9	7.54E-2
APPROXIMATION	7.47143E+6	-0.846996	2.57391E-9	6.21526E-2
"ACTUAL VALUE"	7.47149E+6	-0.84697	2.57390E-9	6.21E-2
x = 27				
APPROXIMATION	1.50712E+7	-0.153734	1.22873E-9	-0.631836
"ACTUAL VALUE"	1.50711E+7	-0.15374	1.22873E-9	-0.631836
APPROXIMATION	1.48753E+7	-0.140288	1.24492E-9	-0.644596
"ACTUAL VALUE"	1.48754E+7	-0.14027	1.24490E-9	-0.6446
x = 28				
APPROXIMATION	3.00119E+7	0.553496	5.95003E-10	-1.33905
"ACTUAL VALUE"	3.00117E+7	0.553493	5.95002E-10	-1.33905
APPROXIMATION	2.96355E+7	0.566449	6.02559E-10	-1.35137
"ACTUAL VALUE"	2.96360E+7	0.5664	6.02557E-10	-1.3514
x = 29				
APPROXIMATION	5.98024E+7	1.26072	2.88306E-10	4.23692
"ACTUAL VALUE"	5.9802E+7	1.26071	2.88306E-10	4.23693
APPROXIMATION	5.90781E+7	1.27321	2.9184E-10	4.22502
"ACTUAL VALUE"	5.90777E+7	1.2732	2.91843E-10	4.2250

x = 30				
APPROXIMATION	1.19235E+8	1.96793	1.39779E-10	3.52972
"ACTUAL VALUE"	1.19235E+8	1.96793	1.3978E-10	3.52972
APPROXIMATION	1.17839E+8	1.98000	1.41436E-10	3.5182
"ACTUAL VALUE"	1.17841E+8	1.9800	1.41436E-10	3.5182

The error is similarly small for values greater than 30.

Step Size

The integrals are evaluated by dividing the range of integration into a large number of small increments and summing the product of integrand (evaluated at the midpoint) and the increment. (A number of different integration schemes were tried, including a twenty-point Gaussian quadrature, but this was the fastest and most accurate up to a point.) The smaller the step size, the greater the accuracy and the greater the execution time. For very small step sizes, the round-off error in the computer will become a contributing factor. The step size was chosen to have the fastest running time and still retain high accuracy. For the region between 0 and 5, most of the integrands are varying rapidly, and the integrals converge to 90% or more of their final value. Therefore, in most programs, we have taken the step size to be 0.01 between 0 and 5, 0.05 between 5 and 15, and 0.1 for x greater than 15. In the encircling coil and inner coil programs, we take the step size to be 0.01 between 0 and 1 and 0.05 for values greater than 1. The error due to the step size varies with the coil and conductor configuration and the value of $\overline{r}^2\omega\mu\sigma$, but is smaller than 0.01% in all cases tested. This error can be reduced by decreasing the value of the step size. (This is named S1 in all the programs.)

Convergence

The values of the integrands in the programs are zero at x = 0 and go to zero as x goes to infinity. The convergence of the integrals also depends on the coil and conductor configuration and the values of $\overline{r}^2\omega\mu\sigma$. The air value in the impedance calculations is the slowest to converge. Table 2 shows the percentage error between the value at

Table 3. Percentage Error in Convergence Tests of Air Value

Length	1	0.5	0.1	0.01
R_2-R_1				
0.01	2.418	3.435	9.095	23.287
0.05	0.8364	1.194	3.183	7.199
0.1	0.1203	0.1734	0.4810	1.171
0.2	0.0457	0.0671	0.1978	0.4961
0.3	0.0133	0.0199	0.05281	0.1760
0.4	0.0095	0.0144	0.0460	0.1247
0.5	0.0072	0.0110	0.0355	0.0957

x = 40 and the final value as a function of the coil dimensions. In some of the longer running programs, such as INNCO and ENCCO, the air value is calculated in AIRCO; this value is used to calculate the final normalized impedances. Similar techniques can be used in the other impedance programs if the error indicated in Table 2 is too large. The value calculated by AIRCO is accurate to about 1E-6.

In addition, the integration can be carried out further by modifying the program. The programs, in general, have a statement IF $X < X_{MAX}$ THEN 110 where the value of X_{MAX} is usually 35. This statement will transfer the control back to a "FOR" loop. By increasing the value of X_{MAX} the program will carry the integration to $X_{MAX} + 5$ in some cases and to $X_{MAX} + 1$ in others.

Additional Errors

In addition to the three major sources of error mentioned, there is some error due to computer round-off. While this is very small in most cases, for extreme coil dimensions it can become quite large. For example, very small values of the coil length, L, produce considerable round-off error due to inaccuracies in calculating the expression

$$L + \left(e^{-xL} - 1\right)/x \quad .$$

For values of L less than 0.001, this should be calculated by a polynomial expansion for small values of x L. (This is done in AIRCO.) For values of L = 0.001 and larger, the error is less than 0.004%.

Round-off errors are in general very small on the GE 430 computer, which carries eleven places. On other machines, however, it may have a much larger effect.

CONCLUSIONS

The programs in this report can be used to accurately calculate properties utilized in many eddy-current tests. By using these programs, the design engineer can quickly optimize a particular eddy-current testing parameter such as test frequency or a coil dimension. Use of these programs should prove extremely valuable in development of eddy-current testing procedures and will result in the design of better and more economical eddy-current tests.

ACKNOWLEDGMENT

The authors would like to express their appreciation to W. E. Deeds and C. C. Lu for reviewing and editing the manuscript and to Frances Scarboro for the final typing.

LIST OF SYMBOLS

Symbol	Name	MKS Unit	Dimensions
f	Frequency	Hertz	$1/T$
j	Square root of minus 1		
L	Inductance	henries	ML^2/Q^2
N	Turns of wire		
$\bar{r}$	Mean coil radius	meters	L
Z_n	Normalized impedance	ohms	ML^2/Q^2T
δ	Skin depth	meters	L
μ	Permeability	henries/meter	ML/Q^2
ρ	Resistivity	ohm meter	ML^3/Q^2T
σ	Conductivity	mho/meter	Q^2T/ML^3
ω	Angular frequency	radians/sec	$1/T$

INTERNAL DISTRIBUTION

1–3. Central Research Library
4. ORNL Y-12 Technical Library Document Reference Section
5–14. Laboratory Records Department
15. Laboratory Records, ORNL-RC
16. ORNL Patent Office
17. G. M. Adamson, Jr.
18. D. Canonico
19. G. W. Clark
20. F. L. Culler
21. J. E. Cunningham
22–71. C. V. Dodd
72. J. H Frye, Jr.
73. W. Fulkerson
74. J. W. Garber (Y-12)
75. W. O. Harms
76–78. M. R. Hill
79. C. C. Lu
80. D. L. Mason (Y-12)
81. R. W. McClung
82. F. D. Mundt (Y-12)
83. H. C. Schweinler
84. G. M. Slaughter
85. W. A. Simpson
86. D. B. Trauger
87. J. R. Weir, Jr.

EXTERNAL DISTRIBUTION

88. S. Aveyard, AERE-Harwell, Didcot, Berkshire, England
89. Robert W. Bailey, Jr., WRAMA/MMETM, Service Engineering, Robbins AFB, Georgia 31093
90. Robert A. Baker, Sandia Laboratories, Division 7361, P.O. Box 5800, Albuquerque, New Mexico 87115
91. Carl E. Baum, Kirtland AFB, New Mexico 87117
92. R. L. Brown, Jr., WADCO, P.O. Box 1970, Richland, Washington 99352
93. R. L. Caryl, LTV Electrosystems, Inc., Commercial Services Division, P.O. Box 1056, Greenville, Texas 75401
94. C. C. Cheng, Physics Department, Northwestern College, Orange City, Iowa
95. D. F. Cope, RDT, SSR, AEC, Oak Ridge National Laboratory
96. W. E. Deeds, the University of Tennessee
97. Robert F. Feldman, General Electric Company, Route I-75, Maildrop E-45, Evendale, Ohio 45215
98. John H. Flora, Battelle Memorial Institute, Columbus, Ohio 43201
99. Ronald Frailer, Physical Laboratory Branch, Inspection Operations Division, Quality Assurance Directorate, Edgewood Arsenal, Md. 21010
100. Robert C. Grubinskas, Department of the Army, Army Materials and Mechanics Research Center, Watertown, Mass. 02172
101. Donald L. Green, WADCO, P.O. Box 1970, Richland, Washington 99352
102. R. H. Jungers, Hq. AFLC/MAFT, Wright-Patterson AFB, Ohio 45433
103. H. L. Libby, Battelle-Northwest, Richland, Wash. 99352

104. C. L. Matthews, RDT, OSR, AEC, Oak Ridge National Laboratory
105. M. C. McIlwain, R-QUAL-ARA, G. C. Marshall Space Flight Center, Marshall Center, Ala. 35812
106. H. Pederson, WADCO, P.O. Box 1970, Richland, Washington 99352
107. J. F. Pierce, the University of Tennessee
108. C. J. Renken, Argonne National Laboratory
109. R. R. Rowand, Hg. AFML/MAMN, Wright-Patterson AFB, Ohio 45433
110. Roy S. Sharpe, AERE-Harwell, Didcot, Berkshire, England
111. Carl B. Shaw, WADCO, P.O. Box 1970, Richland, Washington 99352
112. J. M. Simmons, AEC, Washington
113. Maraland Stanley, Idaho Nuclear Corporation, ARA3 Bldg. 621, P.O. Box 1845, Idaho Falls 83401
114. E. E. Stansbury, the University of Tennessee
115. Harold Stevens, Hq. AFML/MAMN, Wright-Patterson AFB, Ohio 45433
116. Gerald C. Stoker, Sandia Laboratories, Division 7361, P.O. Box 5800, Albuquerque, New Mexico 87115
117. F. E. Thompson, Chief, Physical Laboratory Branch, Quality Assurance Directorate, Edgewood Arsenal, Md. 21010
118. D. L. Waidelich, Department of Electrical Engineering, University of Missouri, Columbia, Mo. 65201
119. J. K. White, Westinghouse Research and Development, Pittsburgh, Pa. 15235
120. Laboratory and University Division, AEC, Oak Ridge Operations
121-122. Division of Technical Information Extension