LOCKHEED MARTIN ENERGY RESEARCH LIBRARIES
3 4456 0513840 0

CENTRAL RESEARCH LIBRARY
DOCUMENT COLLECTION

OAK RIDGE NATIONAL LABORATORY
operated by
UNION CARBIDE CORPORATION
for the
U. S. ATOMIC ENERGY COMMISSION

ORNL-TM-3310

cy. 44

RADIOISOTOPE PROGRAM (8000) PROGRESS REPORT FOR JANUARY 1971

A. F. Rupp

OAK RIDGE NATIONAL LABORATORY
CENTRAL RESEARCH LIBRARY
DOCUMENT COLLECTION
LIBRARY LOAN COPY
DO NOT TRANSFER TO ANOTHER PERSON
If you wish someone else to see this document, send in name with document and the library will arrange a loan.
UCN-7969
13 3-67

NOTICE This document contains information of a preliminary nature and was prepared primarily for internal use at the Oak Ridge National Laboratory. It is subject to revision or correction and therefore does not represent a final report.

This report was prepared as an account of work sponsored by the United States Government. Neither the United States nor the United States Atomic Energy Commission, nor any of their employees, nor any of their contractors, subcontractors, or their employees, makes any warranty, express or implied, or assumes any legal liability or responsibility for the accuracy, completeness or usefulness of any information, apparatus, product or process disclosed, or represents that its use would not infringe privately owned rights.

ORNL-TM-3310

Contract No. W-7405-eng-26

Isotopes Development Center

RADIOISOTOPE PROGRAM (8000) PROGRESS REPORT FOR JANUARY 1971

A. F. Rupp

Work Sponsored by
AEC Division of Isotopes Development

FEBRUARY 1971

OAK RIDGE NATIONAL LABORATORY
Oak Ridge, Tennessee
operated by
UNION CARBIDE CORPORATION
for the
U.S. ATOMIC ENERGY COMMISSION

LOCKHEED MARTIN ENERGY RESEARCH LIBRARIES

3 4456 0513840 0

CONTENTS

Page

RADIOISOTOPE PRODUCTION AND MATERIALS DEVELOPMENT 1

REACTOR-PRODUCED ISOTOPES - 08-01-01 1

A. Biomedical Radioisotopes 1

1. Phosphorus-33 1
2. Potassium-43 1

B. Reactor Products Pilot Production 3

C. Miscellaneous 3

1. HFIR Target Testing 3

ACCELERATOR-PRODUCED ISOTOPES - 08-01-02 3

A. Biomedical Radioisotopes 3

1. Indium-111 3
2. Gallium-67 4
3. Rubidium-84 4
4. Bismuth-206 4

B. Accelerator Pilot Production 5

FISSION PRODUCTS - 08-01-03 6

A. Krypton-85 Enrichment 6

B. Cesium-137 Gamma Source Development 7

1. Cesium Source Form Development 7

C. Cesium-137 Pilot Production 9

1. Processing and Process Status 9
2. Operational Summary 9
3. Current Orders 9
4. Cesium Sources for BNL 9

D. Strontium-90 Pilot Production 10

1. Processing and Process Status 10
2. Operational Summary 10
3. Current Orders 10
4. Source Fabrication and Special Form Containers 11

E. Short-Lived Fission Products Pilot Production 11

Page

F. Promethium-147 Source Fabrication, Powder Shipments, and Current Orders 11

G. Technetium-99 11

APPLICATIONS AND TECHNOLOGY SUPPORT - 08-01-04 13

A. Low-Energy Gamma and Secondary X-Ray Sources 13

1. Plutonium-238 13

B. Radioisotope Characterization, Quality Control, and Standards 14

1. Radioisotope Characterization 14
2. Radioisotope Special Analysis and Quality Control . . . 14

TECHNOLOGY UTILIZATION - 08-01-05 15

A. Information Center 15

B. Isotopes and Radiation Technology 15

C. Publications 15

RADIOISOTOPE APPLICATIONS DEVELOPMENT 15

BASIC TECHNOLOGY DEVELOPMENT - 08-03-01 15

A. Liquid Scintillation Counting 15

SYSTEMS ENGINEERING APPLICATIONS - 08-03-02 17

A. Oceanographic Systems Study 17

RADIOISOTOPE SALES 18

ADMINISTRATIVE 18

RADIOISOTOPE PROGRAM (8000) PROGRESS REPORT FOR JANUARY 1971

A. F. Rupp

RADIOISOTOPE PRODUCTION AND MATERIALS DEVELOPMENT

REACTOR-PRODUCED ISOTOPES - 08-01-01

A. Biomedical Radioisotopes

1. Phosphorus-33

The purpose of this project is to develop methods of preparing hundred-millicurie quantities of carrier-free phosphorus-33 containing $\leq 5\%$ phosphorus-32. The two methods of producing phosphorus-33 being evaluated are based on the irradiation of highly enriched targets of sulfur-33 (>92 at. %) or chlorine-36 (approximately 63 at. %), in a fast neutron flux. Phosphorus-33 (25.2 days; 0.248-MeV β^-_{max}) has both a longer half-life and a lower energy beta than phosphorus-32 (14.3 days; 1.709-MeV β^-_{max}), which makes it advantageous for autoradiography, long-term ecological and agricultural studies, synthesis of tagged complex organophosphorus compounds, and double labeling experiments.

A target containing 2.55 g of $K^{36}Cl$ was irradiated for one HFIR cycle and has been opened for processing. One of the two quartz ampules was broken when the target assembly was opened. The small amount of KCl that spilled was recovered by aspirating the powder into a vacuum flask. This target is being processed to fill current requirements for phosphorus-33. Two additional targets, containing about 1 g each, are presently under irradiation.

2. Potassium-43

The objectives of this project are: to prepare potassium-43 by the $^{43}Ca(n,p)^{43}K$ reaction, using isotopically enriched ^{43}CaO targets, in quantities sufficient for medical and biological experiments; to define a method for separating potassium-43 from the target in a purity suitable for medical use; and to establish cooperative programs with medical institutions interested in evaluating its usefulness. Potassium-43 with a half-life of 22.4 hr and gamma-ray emissions of 0.373 and 0.617 MeV, is potentially useful for metabolic and clinical studies of blood flow, rejection of transplanted organs, and kidney function.

Two shipments of potassium-43 were made. Irradiated enriched (∿50%) ^{43}CaO was dissolved in HCl and processed by ion exchange. Data on the targets and products are summarized in Tables 1 and 2.

Table 1. Yield of Potassium-43 from Calcium-43 Target

	Target 313	Target 314
Weight ^{43}CaO (∿50%),[a] mg	145.3	158.0
Irradiation time, hr	83	67
Product delivery date	1-6-71	1-19-71
Total product at 8:00 AM on delivery date, mCi		
Potassium-43	8.84	10.80
Potassium-42	1.1 (11.9%)	1.3 (12.7%)

[a]Recovered 12-23-70. Isotopic analysis: ^{40}Ca, 21.9 at. %; ^{41}Ca, <0.001 at. %; ^{42}Ca, 8.31 at. %; ^{43}Ca, 50.7 at. %; ^{44}Ca, 19.0 at. %; ^{45}Ca, ≤0.01 at. %; ^{46}Ca, <0.001 at. %; and ^{48}Ca, 0.057 at. %.

Table 2. Radionuclides Found in Dissolver Sample by Gamma Scanning

Radionuclide	Half-life	Activity at Discharge[a] (mCi)		Specific Activity at Discharge (μCi per mg of target)	
		No. 313	No. 314	No. 313	No. 314
Potassium-43	22.4 h	20.8	24.2	143	160
Potassium-42	12.4 h	4.9	5.9	34	39
Sodium-24	15.0 h	10.5	4.2	72	28
Manganese-56	2.58 h	7.6	13.5	52	89
Strontium-87m	2.83 h	22.3	37.0	153	243
Calcium-47	4.53 d	0.48	0.62	3.3	4.1
Scandium-46	83.8 d	1.9	3.8	13	25
Scandium-47	3.35 d	0.46	0.41	3.1	2.7
Europium-152m	9.3 h	—	0.4	—	3.0
Samarium-153	46.8 h	0.4	0.4	3	2.9
Lanthanum-140	40.2 h	0.06	0.09	0.4	0.6
Cadmium-115	53.5 h	0.16	0.25	1.1	1.6
Bromine-82	35.4 h	0.2	0.4	1	3
Antimony-122	2.74 d	0.06	0.06	0.4	0.4

[a]Total target.

Isotopic analysis of the calcium target recovered from the ion-exchange processing of target No. 313 showed substantially no change in the abundances reported in September.[1] During the processing of target 314, a trace of visible solids was detected when the potassium-43 eluate was taken to dryness. This was probably due to operating the column at a flow rate which was fast enough to allow target calcium to bleed through. No radioactive impurities were detected in the product and the amount of residue was inconsequential compared to weight of salts in the isotonic saline medium of the final product solution. No abnormal reactions were noted by cooperative researchers.

Shipments were made under medical cooperative programs to Johns Hopkins Medical Institution, University Hospitals of Cleveland, University of Mississippi Medical Center, and Peter Bent Brigham Hospital.

B. Reactor Products Pilot Production (Production and Inventory Accounts)

Processed Units		Service Irradiations	
Radioisotope	Amount (mCi)	Type	Number
Calcium-47	12	Vanadium samples	1
		Y_2O_3	1
		Iron-nickel	1

C. Miscellaneous

1. HFIR Target Testing

Six removable beryllium stringers were tested this month with no failures.

ACCELERATOR-PRODUCED ISOTOPES - 08-01-02

A. Biomedical Radioisotopes

1. Indium-111

The objectives of this program are to define and optimize production parameters and to make sufficient material available to cooperative participants for their evaluation of indium-111 as a diagnostic radionuclide in such applications as spinal-cerebral cisternography, aerosol lung studies, delayed brain scanning, visualization of the lymphatic system, metabolic studies of indium-labeled macroaggregates and colloids, and tumor localization. Indium-111 has gamma emissions of 173 keV (89%) and 247 keV (94%) ideally suited for external detection and an optimal half-life (2.81 days) for labeling and distribution studies which must be carried out over 24 hr or longer.

[1] A. F. Rupp, Radioisotope Program (8000) Progress Report for September 1970, ORNL-TM-3183, Oak Ridge National Laboratory.

One batch of indium-111, approximately 120 mCi, was prepared and portions of the batch were supplied to interested clinicians as a special research material at full-cost recovery. Preliminary experiments have indicated that it may be possible to use Cerenkov radiation counting for semiquantitative quality control of the product to ensure that the indium-114m content (usually <0.01% of the indium-111 activity at end of bombardment) is not unexpectedly high due to inadvertent contamination of the enriched cadmium-111 target with natural cadmium. This method of analysis will be investigated further to determine its value for quality control of routine production.

2. Gallium-67

The objectives of this program are to determine the optimal target configuration for gallium-67 (78 hr) production by the $^{68}Zn(p,2n)^{67}Ga$ reaction in acceptable purity and quantity and to provide gallium-67 for clinical applications research and development. Interest in this isotope has been spurred by evidence, obtained by the Medical Division of Oak Ridge Associated Universities (ORAU), of a high uptake of carrier-free gallium-67 by lymphoid tumors in both animals and humans.

Gallium-67 decays by electron capture with the emission of four main gamma rays of 93, 184, 296, and 388 keV with intensities of 40, 23, 20, and 8%, respectively.

Two gallium-67 preparations were shipped to ORAU and 12 smaller orders were filled for other customers. Cyclotron target failure problems continue to plague this program. In an attempt to overcome these target failure difficulties, a higher melting Zn-Cu alloy tube target will be tested during February. A rough draft of our accumulated production and processing experience has been prepared and will be submitted for publication soon.

3. Rubidium-84

The objectives of this program are to improve the technology for the production of higher purity rubidium-84 by use of an enriched krypton-84 target. Rubidium-84 is usually produced by proton bombardment of natural krypton targets, but this product is unsuitable for positron camera scanning due to appreciable amounts of rubidium-83 produced simultaneously. The use of rubidium-84 for myocardial scanning with a positron camera has increased the demand for a higher purity product.

One rubidium-84 production run using an enriched krypton-84 target was made, and the product was supplied to customers.

4. Bismuth-206

The objectives of this program are to evaluate the pertinent production parameters and to provide 6.24-day bismuth-206 for evaluation as a diagnostic radionuclide in medicine. Bismuth-206 has been used to delineate brain tumors in

patients with known brain tumors which are poorly visualized by more common radionuclides. Even though very favorable tumor-to-background activity ratio has been obtained by earlier workers, the lack of an appropriate scanning system suitable for the high-energy emissions of this nuclide [803 keV (99%), 880 keV (72%), 895 keV (19%), et al.] has retarded the evaluation of the isotope. We have a cooperative program with Vanderbilt Medical School for the evaluation of bismuth-206 as a diagnostic radionuclide using their high-energy photon scanning system.

A 160-mg $^{207}Pb(NO_3)_2$ target (92.4 at. % lead-207) was irradiated in a window-target holder in the ORNL 86-Inch Cyclotron with approximately 22-MeV protons (estimated proton energy in target was approximately 19.2 MeV) to produce bismuth-206 by the $^{207}Pb(p,2n)^{206}Bi$ reaction. Due to target difficulties, no useful production rate data were obtained, but sufficient bismuth-206 was prepared to obtain preliminary data on product radionuclidic purity. Only bismuth-206 was detected in a Ge(Li) spectrum made on a sample after chemical purification. The counting sample will be recounted after decay of the bismuth-206 to determine the extent of 30-year bismuth-207 contamination. Preliminary work has begun on a $PbCl_2$ precipitation-cation exchange separation procedure to separate lead and bismuth. Preliminary data indicate greater than 95% bismuth recovery.

B. Accelerator Pilot Production (Production and Inventory Accounts)

Table 3 gives the January 1971 accelerator irradiations for ORNL and non-ORNL customers.

Table 3. Accelerator Irradiations and Runs for January 1971

Product	No. of Runs	Time (hr:min) Beam	Misc.	Total	Total Charges
		ORNL Programs			
Gallium-67	3	6:50	3:35	10:25	$ 930.68
Indium-111	1	2:30	1:15	3:45	371.82
Bismuth-206	1	1:00	1:15	2:15	226.75
Total		10:20	6:05	16:25	$ 1,529.25
		Non-ORNL Programs			
Cobalt-57	1	50:00	1:15	51:15	$ 8,541.64
Technetium-95m	1	1:00	1:15	2:15	372.78
Rubidium-84	1	8:00	1:55	9:55	2,455.65
Yttrium-87	2	5:00	2:30	7:30	1,170.20
Yttrium-88	1	8:00	1:15	9:15	1,380.25
Total		72:00	8:10	80:10	$13,920.52

FISSION PRODUCTS - 08-01-03

A. Krypton-85 Enrichment

The depleted ends were removed from unit CD (see Fig. 1) and were replaced by product from units C and D. The depleted ends were removed from units C and D and were replaced with normal feed.

Unit	Activity in Unit (Ci)	Time Since Last Product Removal (days)	Count Rate in Product Section (counts/min) Dec 1970	Jan 1971
A	—	254	—	—
AB	1537	130	10,500	11,500
B	1406	130	8,850	9,400
C	1622	20	8,600	3,400
CD	2565	270	12,100	11,800
D	1470	20	7,000	3,200

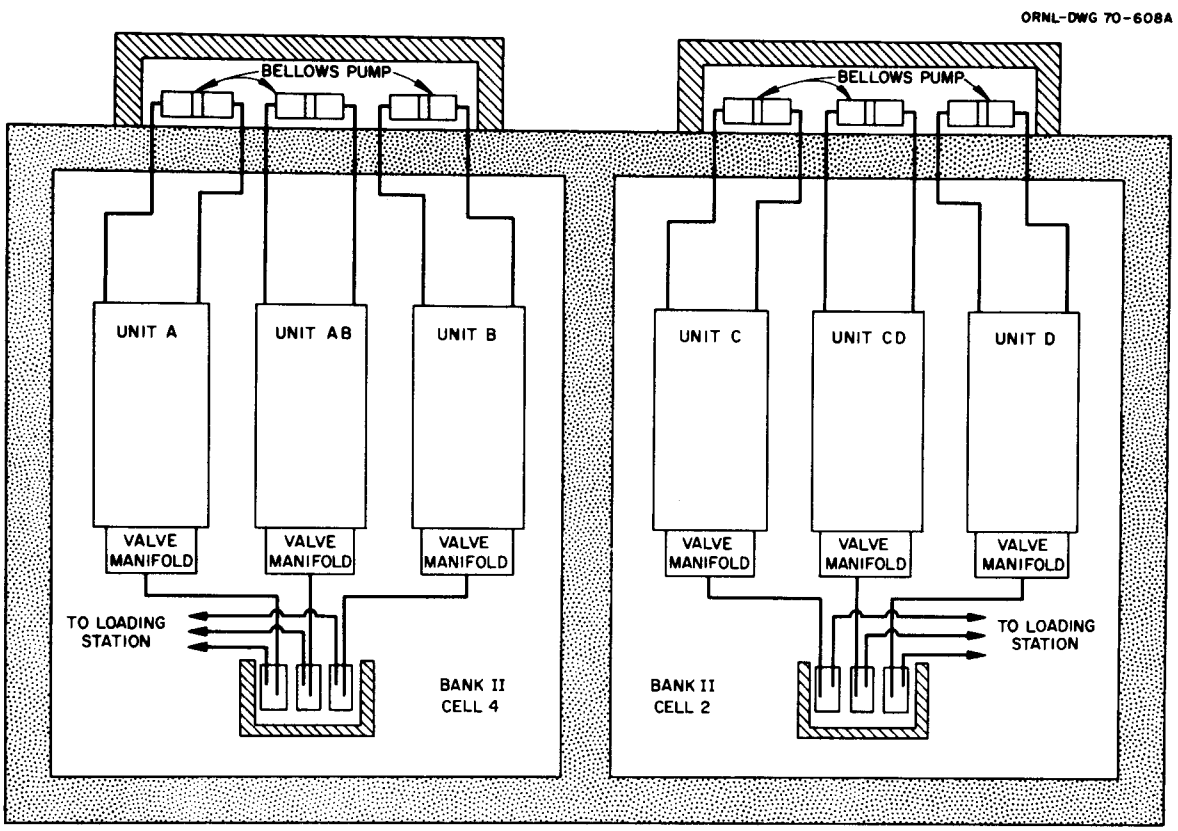

Fig. 1. Schematic Arrangement of Krypton-85 Columns.

B. Cesium-137 Gamma Source Development

1. Cesium Source Form Development

Cesium-137 chloride has been the compound of choice for radiation sources in applications of moderate temperature conditions. In many respects cesium chloride is the ideal compound; the cesium weight per unit volume is high, the radiation resistance of the CsCl is excellent, the compatibility with stainless steel at ambient temperatures is excellent, and its preparation is straightforward. However, the projected conditions of use of cesium-137 gamma sources are increasingly severe with respect to temperature, and some applications indicate the need for a cesium source material which has low solubility. In view of these projected conditions of use, the testing of $^{137}CsCl$ at elevated temperatures is being done and the development of a low solubility, temperature resistant source form of cesium is being studied.

Additional studies have been made of the stability in aqueous solvents of cesium niobates from the $CsOH-Nb_2O_5$ aqueous slurry reaction. The amount of insoluble cesium niobates increases rapidly when the calcination temperature is raised from 120 to 700°C, but further increase to 1000°C does not appear to have any effect. At 120°C the amount of insoluble cesium niobates is increased only slightly by doubling the slurry reaction time.

X-ray diffraction patterns of the products showed little or no evidence of CsOH and Nb_2O_5, implying that the soluble portion represents mostly cesium niobates with low Nb/Cs ratios. The atomic ratios Nb/Cs calculated from the chemical analysis of a few sample solutions were as low as approximately 0.4, depending upon the solvent used, while the same ratio for several insoluble samples varied from 2.1 to 3.0.

The possibility that soluble cesium niobates may have an amorphous structure is based on a comparison of the diffraction patterns of the original product and product from which the soluble portion had been removed. Although both patterns appeared to be identical, the pattern for the latter was much more defined. The diffraction patterns for the insoluble compounds from different solvents were practically the same despite the fact that the Nb/Cs ratio of the compounds varied from approximately 2 to 3. The exact type of structure and the values of lattice parameters for these compounds have not been determined; however, the diffraction patterns appear to be those that could have originated from the cubic perovskite type of structure for $NaNbO_3$ and $KNbO_3$ reported in the literature.

Since the power density is one of the key parameters in determining the usefulness of the source compound, it was estimated for cesium niobates of typical "stoichiometries" encountered in the present work. The values for the first three compounds in Table 4 are calculated from the assumed densities and cesium isotopic purity. Data for other types of potential cesium source compounds are included. The ideal form of cesium niobates

from the standpoint of the power density is the one with the Nb/Cs ratio of 1.0 (0.354 W/cm^3). However, compounds with the Nb/Cs ratio of up to 2 would also have relatively high power densities (about 0.27 W/cm^3).

Table 4. Power Densities of Various Potential Cesium-137 Gamma Source Compounds

Source Compound	Density[a] (g/cm^3)	Total Cesium Content (wt %)	Power Density[c] (W/cm^3)
$CsNb_{1.5}O_{4.25}$	~5[b]	34.8	0.265
$CsNb_2O_{5.5}$	~5.5[b]	33.0	0.276
$CsNb_3O_8$	~6[b]	24.9	0.227
$CsNbO_3$	4.8	48.5	0.354
CsCl	4.0	78.8	0.479
$Cs_2O \cdot Al_2O_3 \cdot 4SiO_2$	2.8	43.7	0.186

[a]Assume 0% voids.
[b]Estimated value.
[c]Assume an isotopic purity of 36.5% cesium-137, the balance being mostly cesium-133. A specific power of 0.152 W per g of cesium (total) is used.

According to two recent Russian papers, when the synthesis of compounds of the type $Me^{I}Me^{V}O_3$ (where Me^{I} is an alkali metal and Me^{V} is either niobium or tantalum) is carried out by sintering alkali carbonates with $Me^{V}_2O_5$, the covering atmosphere (vacuum, air, or nitrogen) exerts significant influences on the rate of reaction, and the structure and physicochemical properties of the product. The tendency for the reaction to be retarded in the presence of air was attributed to the chemisorption of O_2, H_2O, and CO_2 by the solid reaction products. The variations in the structure and in the physicochemical properties when the melts were covered by various gases did not always take place simultaneously. This phenomenon was explained by the authors as due to the deformability of the ABO_3 structure (in the present case A = Me^{I} and B = Me^{V}) that is characterized by a considerable proportion of ionic polarizability.

The current status in the development of alternative cesium-137 source forms has been described in a report entitled "Preliminary Studies on Alternative Cesium-137 Gamma Radiation Source Compounds." The purpose of this report was to update the progress and to conduct a preliminary evaluation of the technical and economic feasibilities of the processes under consideration.

C. Cesium-137 Pilot Production (Production and Inventory Accounts)

1. Processing and Process Status

No cesium-137 processing was done this month. The current cesium-137 process status is as follows.

Item	Cesium-137 (Ci)
In-process material	561,000
Cesium-137 chloride products	220,700
Sources in fabrication	0
Completed sources awaiting shipment	46,500

2. Operational Summary

Item	January 1971		FY 1971	
	Number	Amount (Ci)	Number	Amount (Ci)
HAPO shipments received	0	0	1	388,200
Product batches prepared	0	0	0	0
Sources fabricated	0	0	62	43,400
Special form containers loaded	0	0	9	97,000
Sources shipped to customers	0	0	283	163,300
Special form containers shipped	0	0	12	98,000

3. Current Orders

Current orders for cesium-137 as sources or bulk powder are shown below:

Customer	Amount (Ci)	Estimated Shipping Date
J. L. Shephard and Associates	540	March 1971
Atomic Energy of Canada Limited	1,500	March 1971
C.E.A., France	200,001	April 1971
American Hoechst Corporation	5	April 1971
Brookhaven National Laboratory	203,000	June 1971
Total	405,046	

Orders on hand for cesium-137 as bulk powder or sources to be scheduled and shipped as released by the customer include Atomic Energy of Canda Limited, approximately 154,300 Ci, and Radiation Resources, 200,001 Ci. Cesium sources containing 40,000 Ci are on hand awaiting receipt of shipping instructions from Radiation Resources.

4. Cesium Sources for BNL

A request to supply cesium sources containing measured amounts of cesium-134 and cesium-137 activities was received. The sources will be fabricated of CsCl and will be used by Brookhaven National Laboratory to make radiation

output measurements to compare with calculations in a gamma irradiator design study. In order to assure homogeneous distribution of the activity, the CsCl salt was made by making a solution of inactive CsCl to which the required activity was added and then evaporating the solution to dryness. About 4 kg of CsCl was blended in this manner to produce six different batches containing varying specific activities of cesium-134, cesium-137, and mixtures of the two. The powder will be pressed into pellets of the required density at the Fission Products Development Laboratory.

D. Strontium-90 Pilot Production (Production and Inventory Accounts)

1. Processing and Process Status

Preparation of strontium-90 fuel for a series of pellets to be made for AGN was started. Since the pellets need to be relatively high in power density (greater than 1 W/cm^3), the fuel will be in the distrontium titanate form. Three batches totaling approximately 120,000 Ci were prepared. The total needed for the AGN pellets is 225,000 Ci. The current strontium-90 process status is as follows.

Item	Strontium (Ci)
In-process material	1,170,000
$^{90}SrTiO_3$ products	514,000
Sources in fabrication	0
Returned SNAP sources	295,000
Completed sources awaiting shipment	125,000

2. Operational Summary

Item	January 1971		FY 1971	
	Number	Amount (Ci)	Number	Amount (Ci)
HAPO shipments received	0	0	0	0
Product batches prepared	3	120,000	3	120,000
Sources completed	3	325,600	11	688,900
Special form containers loaded	0	0	25	53,400
Shipments to customers	3	325,600	28	691,200

3. Current Orders

Current orders for strontium-90 as sources or bulk powder are:

Customer	Amount (Ci)	Estimated Shipping Date
U. S. Navy	208,000	February 1971
U. S. Navy	424,000	May 1971

Orders on hand for bulk powder or sources to be scheduled and shipped as released by the customer include Isotopes, Inc., approximately 105,000 and 20,000 Ci.

4. Source Fabrication and Special Form Containers

The strontium-90 work during January was concerned with the fabrication and testing of three Sentinel-25F heat sources. Two of these sources were fabricated without difficulty, but a misalignment of the welding electrode caused the third source to be rejected. This source was opened and the fuel was transferred to another capsule.

Difficulty in obtaining the necessary weld penetration on test pieces caused further delay. This problem was resolved when the customer (Teledyne) informed us that the test pieces they had sent were from a different alloy (Hastelloy C-276). After returning to the original alloy (Hastelloy C), normal weld penetrations were obtained.

These three sources represented a total of 325,600 Ci of strontium-90. The sources ranged from 733 to 745 W. The loading of these sources into generators and the subsequent testing of these generators were accomplished without difficulty.

E. Short-Lived Fission Products Pilot Production (Production and Inventory Accounts)

Isotope	Number of Batches	Amount (Ci)
Xenon-133	3	∿900
Iodine-131	2	130

F. Promethium-147 Source Fabrication, Powder Shipments, and Current Orders

The outstanding order from McDonnell Douglas Astronautics Company for 50,000 Ci is due to be shipped in February from Richland, Washington.

G. Technetium-99

An extrapolation chamber was set up in the laboratory to measure radiation source output and uniformity as a part of the source development program. The extrapolation chamber consists of a parallel plate ionization chamber with a variable air gap and a vibrating reed electrometer (Cary 31) to measure the ion current produced by the absorption of the radiation in the air gap.

Voltage output measurements were made with electrode gap settings varying from 0.1 mm up to 1.5 mm. The ion current was obtained by dividing the output voltage by the value of the input resistor. A plot of ion current versus electrode gap (see Fig. 2) was made and the slope of the curve as it passes through the origin was determined from two widely separated points lying on the straight portion. The surface dose rate was calculated by

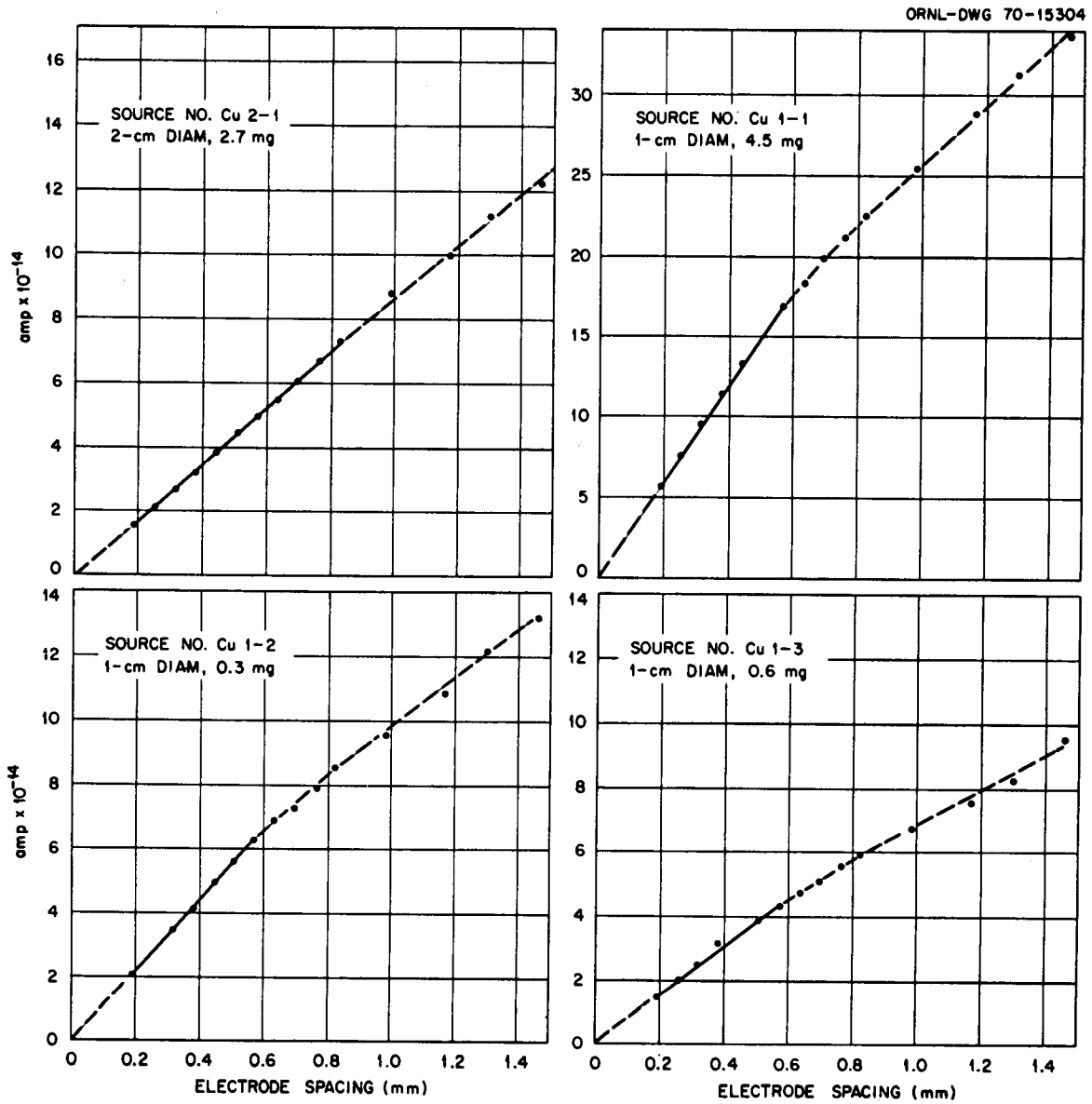

Fig. 2. Current Versus Electrode Spacing for Dose Determination of the Four Sources.

multiplying the slope by the proper energy and volume conversion factors and applying corrections for temperature, barometric pressure, and accelerating electrode thickness.

Surface dose rates were determined for four technetium-99 sources. These sources were prepared by electrodepositing technetium-99 on a 0.001-in.-thick copper disk (2-in. diam). One 2-cm-diam source contained 2.7 mg of technetium. Three 1-cm-diam sources contained 4.5, 0.8, and 0.6 mg of technetium-99. Calculations of surface dose rates were made for comparison, and the results are shown in Table 5.

Table 5. Calculated and Measured Dose Rates for Technetium-99 Sources

Source No.	Amount (mg)	Amount (mCi)	Dose Rate (rad/hr) Measured	Dose Rate (rad/hr) Calculated
Cu 2-1	2.7	0.0459	147	148
Cu 1-1	4.5	0.0765	479	822
Cu 1-2	0.8	0.0136	178	169
Cu 1-3	0.6	0.0102	128	132

Good agreement exists between calculated values and measured dose rates except in the case of source Cu 1-1. In the other cases the beta spectrum emitted from the technetium-99 plate was essentially unchanged because the technetium-99 layer was very thin and therefore did not absorb the betas. In the case of the Cu 1-1 source, the technetium-99 layer is five times as thick and requires additional work to evaluate the absorption coefficient if precise calculations are necessary.

APPLICATIONS AND TECHNOLOGY SUPPORT - 08-01-04

A. Low-Energy Gamma and Secondary X-Ray Sources

1. Plutonium-238

Plutonium-238 decays with a half-life of 87.4 years and produces alpha radiation of approximately 5.5 MeV and low-energy gamma radiation. The 43.5-keV gamma is the most abundant. Our search for low-energy photon radiation (below 100 keV) sources is directed toward the identification and examination of high-purity radioisotopes which have low-energy gamma radiation, particularly those radioisotopes which are being purified and enriched by calutron separation. The enrichment by calutron separation obtains high specific activity radioisotope material from which more useful sources can be fabricated.

Plutonium-238 decays by alpha emission to its ground state in 72% of the disintegrations. Twenty-eight percent of the disintegrations are by alpha emission to the uranium-234 43.5-keV energy level. In the decay of plutonium-238 there are several gammas of energy greater than 43.5 keV.[2] The sum of the percentages of all the photons above 43.5 keV is less than 0.005%.

Small quantities of high-purity $^{238}PuO_2$ are being encapsulated in stainless steel or vanadium capsules to be used as neutron flux monitors. The flux monitors contain approximately 0.5 mg of PuO_2 or about 8.0 mCi of

[2] C. M. Lederer, J. M. Hollander, and I. Perlman, Table of Isotopes, 6th ed., Wiley, New York, 1967.

plutonium-238. The 0.150-in.-long by 0.050-in.-diam capsules can also be used as radiation sources and as such can be arranged in different arrays such as line or ring sources. Although the plutonium-238 is 99.5% of the total plutonium in the source, a trace of plutonium-241 is present which decays to americium-241. The 59.3-keV gamma from the decay of americium-241 is also seen in the energy spectrum from the source.

The greatest interest in this radioactive source is in the 43.5-keV gamma and the lower plutonium and uranium X-ray radiation. The 43.5-keV gamma radiation is highly converted as it emerges from the nucleus (e/γ - 740), so that of the 28% in the decay of plutonium-238 only 0.038% emerges from the nucleus.[3] The absorption of the 43.5-keV gamma energy as it emerges from the nucleus produces L X rays of uranium and plutonium. These X-ray energies are at 17.6 and 20.4 keV. The photon energy peaks were measured by a Si(Li) detector and a multichannel gamma spectrometer.

By summing the areas under the peaks the approximate ratios between the quantities of 17.6 keV, 20.4 keV, and 43.5 keV are 1.7:2.5:1.0. No correction was made for absorption in the source capsule or beryllium window of the Si(Li) crystal. It is apparent that the quantity of each of the two X-ray energies produced is equal to or greater than the amount of 43.5 keV photon which emerges from the nucleus.

B. Radioisotope Characterization, Quality Control, and Standards

1. Radioisotope Characterization

Information has been exchanged with staff members at four universities, who have attempted to confirm the reported variation of half-life of iodine-131 with chemical state of iodine. Their finding of negligible variation agrees with ours[4] and has been submitted for publication in Physical Review. An inquiry about production of radionuclides by photonuclear reactions and by deuteron reactions was answered by reference to the Photonuclear Data Center at the National Bureau of Standards and to three issues of Nuclear Data Tables containing charged-particle reaction lists. The dearth of reliable information on gamma exposure rates from radionuclides[5] has been alleviated by appearance of a handbook.[6] Continued interest suggests the inclusion of that information in the next edition of the Isotope User's Guide, i.e., the numerical constant for each gamma emitter listed.

2. Radioisotope Special Analysis and Quality Control

A summary of local practices with respect to radioisotope calibrations and standards has been prepared. Statistical data on our measurements of "outside" standards are included: 78 preparations of 35 nuclides were measured

---

[3] Ibid.

[4] A. F. Rupp, Radioisotope Program (8000) Progress Report for January 1970, ORNL-TM-2876, Oak Ridge National Laboratory.

[5] A. F. Rupp, Radioisotope Program (8000) Progress Report for February 1970, ORNL-TM-2910, Oak Ridge National Laboratory.

[6] D. Nachtigall, Table of Specific Gamma Ray Constants, K. Thiemig, Munich, 1969.

in recent years, and the average difference between the values of ORNL and the suppliers was 2.0%. After consideration by interested people, a "guide" for radioactivity calibrations may be developed. The general need for information is exemplified by the fact that the section "Availability of Standards" was rated "very useful" by 54% of the respondents to a questionnaire on the Isotope User's Guide. Local measurements of cesium-134 and cesium-137 were reviewed as a result of a user's request for "known" materials. It was concluded that the isotopes can be measured singly with an uncertainty of 2-3%. Verification of measurements by use of national (NBS) and international (IAEA) standards is possible for cesium-137, but not for cesium-134. In answer to an inquiry about confirmation of measurement of beta dose rate from a technetium-99 source, it was suggested that one could use sources prepared from solutions of cobalt-60, promethium-147, or calcium-45 which had been assayed against standards of those nuclides.

TECHNOLOGY UTILIZATION - 08-01-05

A. Information Center

Of the 102 requests for information filled in January, 20% of them came from industry. In filling these requests, 168 items were sent out: four machine searches, 80 documents already prepared by the Center, and 84 brief searches. Sixteen sales letters were translated. A list of reviews in progress is shown on page 16.

B. Isotopes and Radiation Technology

Galley proofing of Isotopes and Radiation Technology 8(3) and writing and editing of the manuscript for 8(4) were virtually completed. Writing and editing of 9(1) was begun.

C. Publications

C. G. Invernizzi, "Ionic Conditioning of Air," from Conference on Isotope Radiation Techniques in the Building Industry, Brussels, October 28-30, 1970, No. 53, ORNL-tr-2427, translated by Helen Warren from French.

RADIOISOTOPE APPLICATIONS DEVELOPMENT

BASIC TECHNOLOGY DEVELOPMENT - 08-03-01

A. Liquid Scintillation Counting

Our study of counting multiple isotopes simultaneously in Cerenkov systems has been completed and is being prepared for publication. We have shown that excellent results can be obtained in these systems if the E_{max} of the isotopes concerned are sufficiently separated (such as phosphorus-32 and chlorine-36). A novel and simple computer program has been developed that

Title	Author(s)	Status (% Complete)
DID Research and Developments - 1970	Isotopes Information Center Staff	At DTIE for reproduction
Iodine-125	P. S. Baker and Martha Gerrard	30
List of AEC Radioisotope Customers with Summary of Radioisotope Shipments, FY 1970	Ruth Curl, compiler	At reproduction
Patent Literature on Process Radiation and Irradiator Design, Part 1. U. S. Patents 1950 Through 1968	R. E. Greene, Helen S. Warren, and P. S. Baker	Draft approved by DID; publication preparation in progress
Potato Sprout Inhibition by Radiation, Part 2	F. E. McKinney	40
Radioisotopes in the Steel Industry, Part 2	W. R. Pavlik, Republic Steel Corp. (F. E. McKinney, Ed.)	75
Selected Abstracts of World Literature on Production and Industrial Uses of Radioisotopes, Part 4	Martha Gerrard and P. S. Baker	50
Self-Diffusion in Liquids	F. J. Miller	75
Strontium-90	Roberta Shor, R. H. Lafferty, Jr., and P. S. Baker	Final typing
Technetium-99m: Preparation and Uses	Martha Gerrard and P. S. Baker	60
Radioisotopes in the Textile Industry	F. J. Miller	90
Grain Disinfestation - A Worldwide Review	F. E. McKinney	20
AEC Participation in the Development of Wood-Plastic Composites	R. E. Greene	95
Permuted Isotopes and Radiation Technology Indexes (PIRTI) 1962-1969, Vols. 1-7	Helen Raaen, P. S. Baker, R. H. Lafferty, Jr., Ann S. Klein, and Linda P. Helton, Eds.	Ready for reproduction
Presowing Irradiation of Seed	Russian book translated and edited by P. S. Baker and Martha Gerrard	Final typing being proofed
Radiation Processing of Sewage	Martha Gerrard	Final typing
Iodine-131 Production Methods	French report being translated by Martha Gerrard	Final typing

will predict the errors associated with multiple isotope analysis; all that is needed are the Cerenkov response functions of the individual isotopes. The predicted and observed errors are in very close agreement.

We have extended our Cerenkov techniques to practical measurement applications in the environment. These initial studies are directed toward radioisotope residue levels in streams and ponds in the ORNL area. We have also developed an interesting method to quickly identify the approximate beta energy of low level isotopes in solution. Based on a 30-min count, the lower detection limit for a moderate energy emitter in glass vials is ≈ 0.8 pCi/ml (at the 3σ background level). We propose that this limit can be reduced by a factor of 2 if polyethylene vials are used (less potassium-40); this will be checked in the near future. The general survey of the ORNL area will be continued.

SYSTEMS ENGINEERING APPLICATIONS - 08-03-02

A. Oceanographic Systems Study

Radionuclides appear to be useful tools to study sand transport phenomena and, although many experiments have been conducted to demonstrate their effectiveness as tracers, little is known concerning whether or not the dynamic systems in which they are used can be tagged well enough to achieve quantitative data leading to an understanding of basic mechanisms. The Radioisotope Sand Tracing (RIST) study has progressed through equipment development to the point where important system tagging parameters can be studied.

All the equipment has been returned to ORNL and is being readied for the next experiment. Routine maintenance is being performed on the survey equipment, and modifications to the instrument shelter are being made to accommodate the PDP/8I computer. The PDP/8I system has been completed and programs to collect and display the data have been written. By using the incremental magnetic tape unit, it is possible to generate interpolated radiation contour maps at the test site. This should be a real asset to the experimenters in making daily decisions that affect the collection of data and the results from the overall experiment.

A thorough study of the data collected from the plug injections at Point Mugu has been completed. Three plug injections were made at water depths of 2, 15, and 18 ft. The plugs were then sampled by obtaining 12-in. cores. By using collimators in 1-in. increments the cores were counted to obtain the distribution of activity as a function of depth.

Sand transport rates through the plug were calculated. The results from the -15 ft injection are given below.

Four core samples were obtained from the plug over 26 hr. The time at which each sample was obtained can be designated as T_1, T_2, T_3, and T_4. Any time period, T_1 to T_2 or T_1 to T_3, etc., can be used for the calculations.

Time Period	Sand Transport (cm^3/hr)
T_1-T_2	3120
T_2-T_3	1299
T_3-T_4	4995
T_1-T_4	985
T_2-T_4	1616

There is a high degree of variance which we believe is primarily caused by nonuniformity in the plug and the sampling technique. The next plug experiments will concentrate on these two problem areas.

RADIOISOTOPE SALES

Requests for quotations were received from C.E.A., New York, for 200,000 and 300,000 Ci of strontium-90 as strontium titanate bulk powder and from the Government of India for 10,000 to 100,000 Ci of cesium-137 as encapsulated sources.

Shipments made during the month that may be of interest are 12,501 Ci of tritium and 200 Ci of krypton-85 to Radiochemical Centre, England, and 325,600 Ci of strontium-90 to the U. S. Navy.

The radioisotope sales proceeds and shipments for the first six months of FY 1970 and 1971 are given in Table 6.

Table 6. Radioisotope Sales and Shipments

Item	7-1-69 thru 12-31-69	7-1-70 thru 12-31-70
Inventory items	$304,346	$276,859
Major products	57,277	66,390
Radioisotope services	125,492	165,522
Cyclotron irradiations	72,637	71,986
Miscellaneous processed materials	41,801	37,821
Packing and shipping	37,615	43,850
Total Income	$639,168	$662,428
Number of Shipments	1,260	1,646

ADMINISTRATIVE

Travel by IDC personnel and visitors to the IDC are given in Tables 7 and 8.

Table 7. Travel by IDC Personnel

Site Visited	Purpose of Visit
Wrightsville Beach, N. C.	To attend briefing on field test to be made on RIST project
Washington, D. C.	Discuss RIST program with DID personnel
Washington, D. C.	Attend meeting of Highway Research Board Committee A2H01 and for discussions with DID on TPR

Table 8. Visitors to IDC

Affiliation	Purpose of Visit
University of Southern California Los Angeles, California	To obtain information on radiopharmaceuticals
Stedman Corporation	To discuss tracing of textile industry components

INTERNAL DISTRIBUTION

1. A. L. Allen
2. M. A. Baker
3. P. S. Baker
4. E. E. Beauchamp
5. G. E. Boyd
6-8. T. A. Butler
9. F. N. Case
10. J. A. Cox
11. F. L. Culler
12. W. C. Davis
13. J. S. Drury
14. J. H. Gillette
15. H. R. Gwinn
16. R. F. Hibbs
17. K. E. Jamison
18. Lynda Kern
19. E. H. Kobisk
20. E. Lamb
21. R. E. Leuze
22. J. L. Liverman
23. L. O. Love
24. W. S. Lyon
25. R. E. McHenry
26. F. M. O'Hara
27. W. W. Parkinson
28. J. J. Pinajian
29. M. E. Ramsey
30. S. A. Reynolds
31-32. R. A. Robinson
33. D. A. Ross
34. A. F. Rupp
35. R. W. Schaich
36. A. H. Snell
37. K. A. Spainhour
38. M. R. Skidmore
39-40. H. F. Stringfield
41. D. B. Trauger
42. A. M. Weinberg
43. J. C. White
44-45. Central Research Library
46. Document Reference Section
47-51. Laboratory Records Department
52. Laboratory Records - RC

EXTERNAL DISTRIBUTION

53. G. A. Andrews, ORAU, Medical Division, Oak Ridge, Tennessee
54. Hal Atkins, Brookhaven National Laboratory, Upton, New York
55. D. S. Ballantine, AEC, Washington, D. C.
56-59. R. F. Barker, AEC, Washington, D. C.
60. N. F. Barr, AEC, Washington, D. C.
61. O. M. Bizzell, AEC, Washington, D. C.
62. C. R. Buchanan, AEC, Washington, D. C.
63. R. L. Butenhoff, AEC, Washington, D. C.
64. T. D. Chikalla, PNL, Richland, Washington
65. D. F. Cope, AEC Site Representative, ORNL
66. J. C. Dempsey, AEC, Washington, D. C.
67. W. K. Eister, AEC, Washington, D. C.
68. E. E. Fowler, AEC, Washington, D. C.
69. J. D. Goldstein, AEC, Washington, D. C.
70. A. Gottschalk, Argonne Cancer Research Hospital, Chicago, Illinois
71. F. D. Haines, AEC, Washington, D. C.
72-74. J. E. Hansen, PNL, Richland, Washington
75. J. W. Irvine, MIT (Consultant)
76. J. Lawrence, Lawrence Radiation Laboratory, Berkeley, California
77. J. E. Machurek, AEC, Washington, D. C.
78. J. N. Maddox, AEC, Washington, D. C.
79. J. C. Malaro, AEC, Washington, D. C.
80. W. E. Mott, AEC, Washington, D. C.
81. J. A. Powers, AEC, Washington, D. C.
82. G. J. Rotariu, AEC, Washington, D. C.

83. B. A. Ryan, AEC, Richland, Washington
84. W. D. Sandberg, AEC, Aiken, South Carolina
85. S. J. Seiken, AEC, Washington, D. C.
86. R. W. Shivers, AEC, Washington, D. C.
87. F. J. Skozen (Krizek), Argonne Cancer Research Hospital, Chicago
88. P. E. Smith, ARHCO, Richland, Washington
89. L. G. Stang, Jr., BNL, New York
90. G. Taplin, University of California, Los Angeles, California
91-96. D. H. Turno, SRL, Aiken, South Carolina
97. A. R. Van Dyken, AEC, Washington, D. C.
98. Laboratory and University Division
99-113. Division of Technical Information Extension