LOCKHEED MARTIN ENERGY RESEARCH LIBRARIES
3 4456 0513882 9

CENTRAL RESEARCH LIBRARY
DOCUMENT COLLECTION

**OAK RIDGE NATIONAL LABORATORY**
operated by
**UNION CARBIDE CORPORATION** • NUCLEAR DIVISION
for the
U. S. ATOMIC ENERGY COMMISSION

ORNL-TM-3653

cy. 44

[redacted]

# RADIOISOTOPE PROGRAM (8000) PROGRESS REPORT FOR NOVEMBER 1971

A. F. Rupp

OAK RIDGE NATIONAL LABORATORY
CENTRAL RESEARCH LIBRARY
DOCUMENT COLLECTION
**LIBRARY LOAN COPY**
DO NOT TRANSFER TO ANOTHER PERSON
If you wish someone else to see this document, send in name with document and the library will arrange a loan.
UCN-7969
(3) 3-67)

**NOTICE** This document contains information of a preliminary nature and was prepared primarily for internal use at the Oak Ridge National Laboratory. It is subject to revision or correction and therefore does not represent a final report.

This report was prepared as an account of work sponsored by the United States Government. Neither the United States nor the United States Atomic Energy Commission, nor any of their employees, nor any of their contractors, subcontractors, or their employees, makes any warranty, express or implied, or assumes any legal liability or responsibility for the accuracy, completeness or usefulness of any information, apparatus, product or process disclosed, or represents that its use would not infringe privately owned rights.

ORNL-TM-3653

Contract No. W-7405-eng-26

Isotopes Development Center

# RADIOISOTOPE PROGRAM (8000) PROGRESS REPORT FOR NOVEMBER 1971

A. F. Rupp

Work Sponsored by
AEC Division of Isotopes Development

DECEMBER 1971

OAK RIDGE NATIONAL LABORATORY
Oak Ridge, Tennessee 37830
operated by
UNION CARBIDE CORPORATION
for the
U.S. ATOMIC ENERGY COMMISSION

LOCKHEED MARTIN ENERGY RESEARCH LIBRARIES

3 4456 0513882 9

CONTENTS

Page

RADIOISOTOPE PRODUCTION AND MATERIALS DEVELOPMENT . . . . . 1

REACTOR-PRODUCED ISOTOPES - 08-01-01 . . . . . 1

A. Biomedical Radioisotopes . . . . . 1

1. Potassium-43 . . . . . 1
2. Phosphorus-33 . . . . . 2

B. Miscellaneous . . . . . 3

1. Cerium-141 Source for Los Alamos . . . . . 3

C. Isotopic Power . . . . . 5

1. Thulium-170 . . . . . 5

D. Rare-Earth Radionuclides . . . . . 6

1. Europium-156 . . . . . 7

E. Purification of Cadmium-109 . . . . . 7

F. Reactor Products Pilot Production . . . . . 9

ACCELERATOR-PRODUCED ISOTOPES - 08-01-02 . . . . . 9

A. Biomedical Radioisotopes . . . . . 9

1. Gallium-67 . . . . . 9
2. Indium-111 . . . . . 10
3. Rubidium-83 . . . . . 11

B. Accelerator Pilot Production . . . . . 12

C. Rare-Earth Radionuclides . . . . . 13

1. Terbium-156 . . . . . 13

FISSION PRODUCTS - 08-01-03 . . . . . 14

A. Krypton-85 Enrichment . . . . . 14

B. Cesium-137 Gamma Source Development . . . . . 15

1. Alternative Cesium-137 Source Form Development . . . . 15

Page

C. Cesium-137 Pilot Production . . . . . 19

1. Processing and Process Status . . . . . 19
2. Operational Summary . . . . . 19
3. Current Orders . . . . . 19

D. Strontium-90 Pilot Production . . . . . 20

1. Processing and Process Status . . . . . 20
2. Operational Summary . . . . . 20
3. Current Orders . . . . . 21
4. URIPS-8 Generator Assembly . . . . . 21

E. Short-Lived Fission Products Pilot Production . . . . . 21

SOURCE DEVELOPMENT - 08-01-04 . . . . . 21

A. Radiation Processing . . . . . 21

B. Radiation Source Development . . . . . 25

C. Radioisotope Characterization, Quality Control, and Standards . . . . . 25

1. Radioisotope Characterization . . . . . 25
2. Radioisotope Special Analysis and Quality Control . . 26

D. Radioisotope Safety . . . . . 26

1. Gas Chromatograph Foils — Cleaning Procedure Tests . 26

TECHNOLOGY UTILIZATION - 08-01-05 . . . . . 28

A. Information Center . . . . . 28

B. Isotopes and Radiation Technology . . . . . 29

C. Translation . . . . . 29

RADIOISOTOPE SYSTEMS DEVELOPMENT . . . . . 30

OCEANOGRAPHIC AND NATURAL RESOURCES DEVELOPMENT - 08-03-02 . 30

A. Sand Transport Study . . . . . 30

1. RIST Plug Model for Volume Rate of Sand Transport . . 30

RADIOISOTOPES SALES . . . . . 34

ADMINISTRATIVE . . . . . 35

PUBLICATIONS . . . . . 36

# RADIOISOTOPE PROGRAM (8000) PROGRESS REPORT FOR NOVEMBER 1971

*A. F. Rupp*

## REACTOR-PRODUCED ISOTOPES - 08-01-01

### A. Biomedical Radioisotopes

#### 1. Potassium-43

The objectives of this project are: to prepare potassium-43 by the $^{43}Ca(n,p)^{43}K$ reaction, using isotopically enriched $^{43}CaO$ targets, in quantities sufficient for medical and biological experiments; to define a method for separating potassium-43 from the target in a purity suitable for medical use; and to establish cooperative programs with medical institutions interested in evaluating its usefulness. Potassium-43, with a half-life of 22.5 hr and gamma-ray emissions of 0.373 and 0.617 MeV, is potentially useful for metabolic and clinical studies of blood flow, rejection of transplanted organs, and kidney function because the dose rate would permit multiple doses.

Two batches of potassium-43 were made; data for the runs are summarized in Tables 1 and 2. On one batch the $^{43}CaO$ target was suspended in water and treated with solid $CO_2$ to metathesize it to $CaCO_3$, which was then filtered. Part of the target remained lodged in a portion of the broken ampule, and it could only be removed by dissolving in HCl. The $CaCO_3$ precipitate was found to contain about half the potassium-43 activity, so the dissolved sample was loaded on the cation column and separated in the usual way. The precipitation of $CaCO_3$ without acid dissolution of the target presents a practical problem in the recovery of potassium-43.

Table 1. Yield of Potassium-43 from Calcium-43 Targets

| | Target 427 | Target 436 |
|---|---|---|
| Weight $^{43}CaO$ (mg) | 186[a] | 166[b] |
| Irradiation time (hr) | 64.3[c] | 66 |
| Product delivery date | 11/2/71 | 11/16/71 |
| Total product at 8:00 AM on delivery date (mCi) | | |
| Potassium-43 | 10.4 | 11.6 |
| Potassium-42 | 1.2 (11.3%) | 1.5 (13.1%) |

[a]61.63% $^{43}Ca$, new target, batch 136326.

[b]61.6% $^{43}Ca$, recovered 11/11/71 from targets 417 and 427.

[c]Reactor at 80% full power.

Table 2. Radionuclides Found in Dissolver Sample by Gamma Scanning

| Radionuclide | Half-Life | Activity at Discharge[a] (mCi) | | Activity Concentration at Discharge (μCi/mg of target) | |
|---|---|---|---|---|---|
| | | Target 427 | Target 436 | Target 427 | Target 436 |
| Potassium-43 | 22.5 h | 25.4 | 31.3 | 137 | 189 |
| Potassium-42 | 12.4 h | 5.6 | 7.8 | 30 | 47 |
| Sodium-24 | 15.0 h | 0.76 | 2.3 | 4.1 | 14 |
| Manganese-56 | 2.58 h | 0.76 | 8.7 | 4.1 | 52 |
| Strontium-87m | 2.83 h | 51 | 34 | 270 | 200 |
| Calcium-47 | 4.53 d | 0.28 | 0.36 | 1.5 | 2.2 |
| Scandium-46 | 83.8 d | — | 0.38 | — | 2.3 |
| Scandium-47 | 3.35 d | 0.11 | 0.33 | 0.6 | 2.0 |
| Copper-64 | 12.8 h | 0.7 | 3.3 | 3.8 | 20 |
| Lanthanum-140 | 40.2 h | — | 0.26 | — | 1.6 |
| Samarium-153 | 28.4 h | 0.01 | 0.25 | 0.05 | 1.5 |
| Bromine-82 | 35.4 h | 0.07 | — | 0.4 | — |
| Chromium-51 | 27.7 d | — | 0.03 | — | 0.2 |

[a]Total target.

A small-bore tubing was attached to the bottom of the ion-exchange column and wrapped around an in-cell radiation probe. This experiment demonstrated a practical way to determine when the sodium-24 and potassium-43 peaks were eluting from the column. This technique should be useful in monitoring in-cell operations when the process is scaled up.

Shipments of potassium-43 were made to Johns Hopkins; National Institutes of Health; University Hospitals of Cleveland; University of Texas Medical Center in Galveston; and V. A. Center, Wood, Wisconsin. The National Institutes of Health is increasing its standing order for potassium-43.

## 2. Phosphorus-33

The purpose of this project is to develop methods of preparing hundred-millicurie quantities of carrier-free phosphorus-33 containing $\leq$ 5% phosphorus-32. The two methods of producing phosphorus-33 being evaluated are based on the irradiation of highly enriched targets of sulfur-33 (>92 at. %) or chlorine-36 (approximately 63 at. %) in a fast neutron flux. Phosphorus-33 (25.2 days; 0.248-MeV $\beta^-_{max}$) has both a longer half-life and a lower energy beta than phosphorus-32 (14.3 days; 1.709-MeV $\beta^-_{max}$), which makes it advantageous for autoradiography, longer

ecological and agricultural experiments than with phosphorus-32, synthesis of tagged complex organophosphorus compounds, and double labeling experiments.

Additional process development has been undertaken on the separation and purification of phosphorus-33 based on the work of McIsaac and Voigt[1] who used an $Fe(OH)_3$ column suspended on a strongly acidic cation exchanger to separate $^{32}PO_4^{3-}$ from $^{35}SO_4^{2-}$. By suspending the $Fe(OH)_3$ in such a manner, the system exhibits chromatographic behavior rather than the less efficient batch behavior encountered when separate $Fe(OH)_3$ precipitation-dissolution cycles are performed in conventional glassware. This approach also offers the advantage that no extraneous ions [i.e., $SO_4^{2-}$ ion which is added as $Fe_2(SO_4)_3 \cdot 9H_2O$ in the present separation procedure for $K^{36}Cl$ targets] are added that must later be separated from the target material before it can be re-irradiated. The use of the column also offers the advantage of much less handling and a greater adaptability to remote operation.

The results of a preliminary experiment utilizing an $Fe(OH)_3$ column suspended on AG50W-X4, 200-400 mesh cation exchange resin are shown in Fig. 1. A synthetic KCl dissolver solution which was 0.08 *M* in NaCl, 0.43 *M* in KCl, pH ≈6 and tagged with $^{32}PO_4^{3-}$ and $^{35}SO_4^{2-}$ was prepared (eluent A in Fig. 1) and passed through the $Fe(OH)_3$ column. This was followed by 24 ml of $H_2O$ wash (eluent B in Fig. 1) and then finally by 30 ml of 1.0 *N* $H_2SO_4$ (eluent C in Fig. 1). Samples were collected in 10-ml volumes and Cerenkov radiation counted directly to determine the phosphorus-32 behavior (solid line in Fig. 1). After Cerenkov counting of phosphorus-32 activities, 1.0-ml aliquots were taken from each counting sample for sulfur-35 determination by liquid scintillation counting (dotted lines in Fig. 1). A chemical spot test for chloride ion was performed at the end of the sixth sample (volume ≈59 ml) and found to be negative.

This initial experiment is considered very successful, for it indicates that (1) macro amounts of KCl do not affect the $^{32}P$-$^{35}S$ separation, (2) a $K^{36}Cl$ target could be easily removed from the column without appreciable "tailing," and (3) phosphorus-32 losses should be minimal. Additional processing development will be performed during the next quarter to ensure complete recovery of $^{36}Cl^-$ ion and to better characterize and define optimal preparation and operating characteristics for this column before utilization in routine processing.

## B. Miscellaneous

### 1. Cerium-141 Source for Los Alamos

Los Alamos was interested in a high-purity, high-specific activity cerium-141 source to be used to align experiments in a beam tube over 1000 feet long.

---

[1]L. D. McIsaac and A. Voigt, *A New Technique for the Separation of Radiophosphorus from Sulfur*, ISC-271, Ames Laboratory (1952).

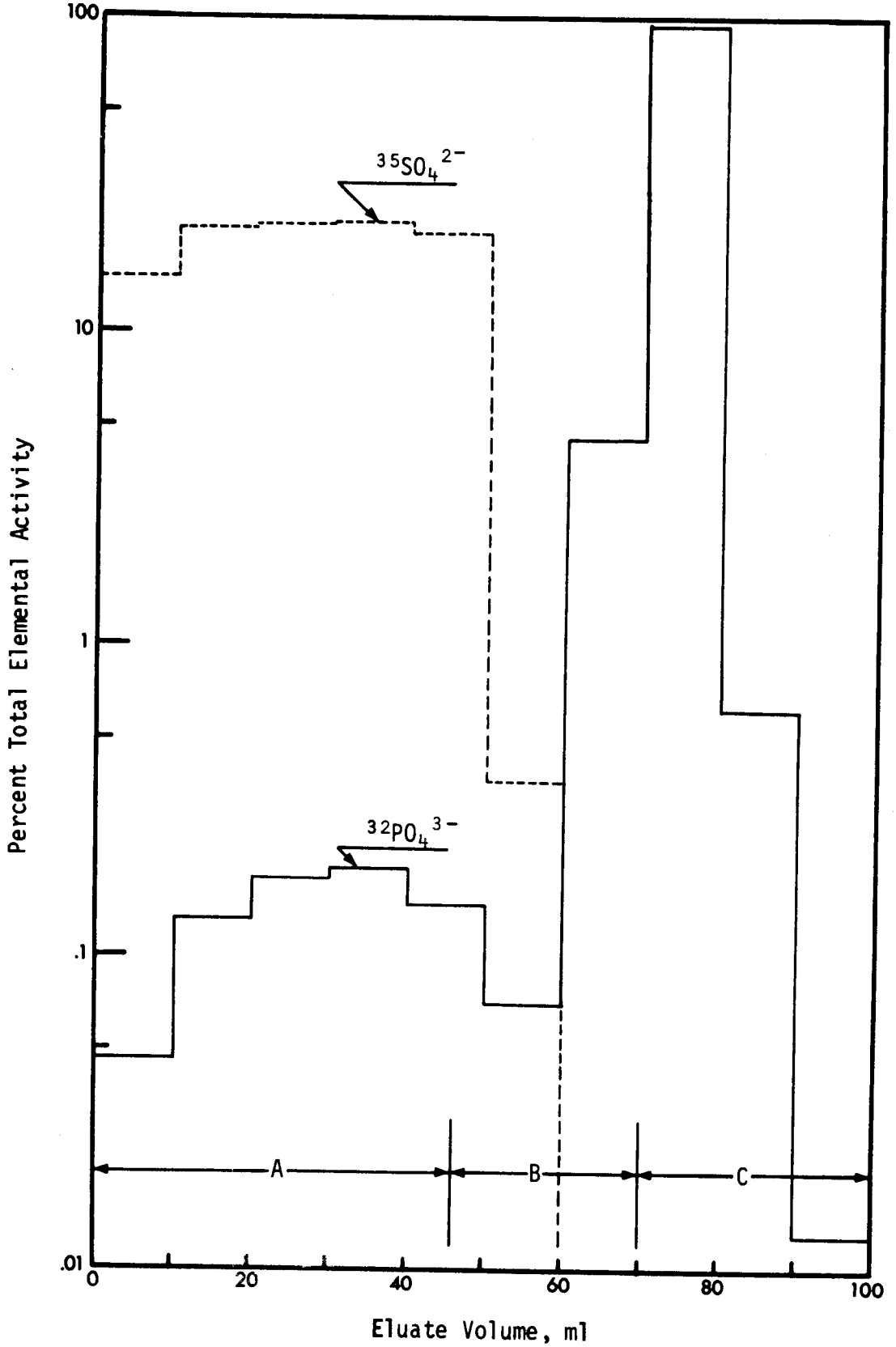


Fig. 1. $Fe(OH)_3$ Elution Profiles of $^{32}PO_4^{3-}$ and $^{35}SO_4^{3-}$ Ions.

The photon beam will be passed through a 14-mil-diam lead pinhole collimator and focused on a sensitive film with a magnification factor of 2.5. Calculations indicated that a 0.6-cm-diam by 0.2-cm-high $CeO_2$ disk with a specific activity of 40 Ci/g would provide an exposure field of only 0.15 μR/hr at the film, thus high specific activity was an essential requirement. ORNL was asked to provide the source after no commercial suppliers could be found.

The target material for the source was 99.7% enriched $^{140}CeO_2$. A test irradiation for three days in the HFIR hydraulic tube indicated the presence of traces of samarium which would lead to europium-156 activity over a long irradiation. The target material was, therefore, purified by solvent extraction of Ce(IV) with di(2-ethylhexyl)phosphate and recovered by precipitation and calcining of oxalate. A capsule containing 0.97 g $^{140}CeO_2$ was irradiated in the HFIR, and, despite reactor operating difficulties at the time, an exposure of approximately 41 days was achieved by extending the delivery date.

The irradiated quartz ampule was broken and the $CeO_2$ was sieved to remove quartz. Enough target was available to make a backup wafer, and two wafers were made by cold-pressing oxide in a 7-mm Teflon-coated die and sintering for 8 hr at 1450°C. A portion of the powder was dissolved, and the solution was analyzed radiochemically and spectrographically for cerium. From these analyses a specific activity of 67 Ci $^{141}Ce$ per g $CeO_2$ was calculated. The only activity observed which did not arise from the cerium isotopes present was <0.1% of 15-hr sodium-24 one day after reactor discharge, attesting to the target purity. The other activities identified are summarized below:

| Activity | Half-Life | Origin | % Activity One Day After Discharge |
|---|---|---|---|
| $^{139}Ce$ | 138 d | $^{138}Ce(n,\gamma)^{139}Ce$ | 0.025 |
| $^{143}Ce$ | 33 h | $^{142}Ce(n,\gamma)^{143}Ce$ | 0.8 |
| $^{140}La$ | 40.2 h | $^{140}Ce(n,p)^{140}La$ | 0.054 |
| $^{142}Pr$ | 19.2 h | $^{141}Ce \xrightarrow{\beta^-} {}^{141}Pr(n,\gamma)^{142}Pr$ | 2.4 |

Both wafers were satisfactory and were shipped to Los Alamos on schedule. Their dimensions are summarized below:

| Wafer | Diam (cm) | Height (cm) | Weight (g) | $^{141}Ce$ Activity (Ci) |
|---|---|---|---|---|
| 1 | 0.653 | 0.262 | 0.470 | 31.5 |
| 2 | 0.653 | 0.208 | 0.372 | 25.0 |

## C. Isotopic Power

### 1. Thulium-170

The objectives of this research are to provide sufficient data on thulium-170 to permit assessment of its potential application as an isotopic power source for short-duration missions.

Work to correct the water leakage problem inside the vacuum furnace is still in progress. Since attempts to repair the cooling coils at ORNL were unsuccessful, the coils have been returned to the manufacturer for repair. The experiment will be resumed as soon as the repair work is completed.

## D. Rare-Earth Radionuclides

> It is becoming increasingly apparent that various insoluble compounds of rare earths (e.g., sulfides) may be extremely useful in mechanically outlining obstructions due to cancerous tissue in the capillary and lymphatic system of the body. The wide span of half-lives and gamma radiations available in this class of radionuclides which have essentially identical chemical properties allows a wide choice of nuclides.
>
> Furthermore, many of these nuclides exhibit Mössbauer properties, again with a wide range of resonance cross section, natural width, minimum observable width, and recoil energy.
>
> The rare earths occupy a region of the chart of the nuclides where the spherical nuclei change to permanently deformed nuclei, with abrupt changes in nuclear structure properties. This transition region is particularly attractive for comparison of the observed nuclear properties to theoretical predictions.

One of the major problems in producing rare-earth radionuclides for medical application or for Mössbauer applications is the fact that in many cases even a cursory estimation of the activity prepared has not been possible because of the lack of detailed information concerning the decay scheme.

We have recently reported on the carrier-free preparation of 15.2-day europium-156 and 5.4-day terbium-156.[2,3] These nuclei decay by negatron and electron capture, respectively, to excited levels in gadolinium-156. The 89.0-keV metastable level of gadolinium-156 exhibits Mössbauer properties. Our interest, in addition to developing production techniques, was to establish absolute values for the intensities of the gamma rays emitted by europium-156 and terbium-156. Terbium-156 is discussed in the "Accelerator-Produced Isotopes" section.

---

[2]A. F. Rupp, *Radioisotope Program (8000) Progress Report for June 1971*, ORNL-TM-3501, Oak Ridge National Laboratory, p. 5.

[3]A. F. Rupp, *Radioisotope Program (8000) Progress Report for April 1971*, ORNL-TM-3414, Oak Ridge National Laboratory, p. 9.

1. Europium-156

The beta feeding to the 1965.89-keV level has been established as 33.3%. Since there are no gamma-ray transitions feeding this level, we are able to adjust the de-excitations from this level to be equal to 33.3% and from that normalize all other gamma-ray intensities. Table 3 lists those of the 95 gamma rays in gadolinium-156 produced by the decay of europium-156 which have absolute intensities in excess of 1%.

Table 3. Europium-156: Energies and Absolute Intensities of the Gamma Rays in Excess of 1%

| Gamma-Ray Energy (keV) | Absolute Intensity (%) |
|---|---|
| 88.95 | 9.6 |
| 599.47 | 2.40 |
| 646.29 | 7.18 |
| 723.47 | 6.17 |
| 811.77 | 11.1 |
| 867.01 | 1.49 |
| 944.35 | 1.48 |
| 960.50 | 1.65 |
| 1065.14 | 5.56 |
| 1079.16 | 4.67 |
| 1153.47 | 7.58 |
| 1154.09 | 5.59 |
| 1230.71 | 9.23 |
| 1242.42 | 7.64 |
| 1277.43 | 3.35 |
| 1366.41 | 1.88 |
| 1877.03 | 1.79 |
| 1937.71 | 2.22 |
| 1965.95 | 4.44 |
| 2026.65 | 3.75 |
| 2097.70 | 4.40 |
| 2180.91 | 2.57 |
| 2186.71 | 3.90 |
| 2205.38 | 1.02 |
| 2269.90 | 1.17 |

E. Purification of Cadmium-109

Cadmium-109 can be produced by neutron irradiation of cadmium-108, $^{108}Cd(n,\gamma)^{109}Cd$, or by irradiation of natural silver, $^{107}Ag(n,\gamma)^{108m}Ag \xrightarrow{2.4\ m} {}^{108}Cd(n,\gamma)^{109}Cd$.

The specific activity of the cadmium-109 produced by the above reactions is limited to approximately 3 mCi

of cadmium-109 per milligram of cadmium because of the high cross section[4] for the reaction, $^{109}Cd(n,\gamma)^{110}Cd$.

Cadmium decays with a half-life of 460 days, producing low-energy silver x rays (∿22 keV) and 88-keV gamma rays. The lower energy x ray is particularly useful for fluorescence x-ray analyses of those elements whose K or L x-ray energies are below 22 keV.

In order to achieve a high sensitivity of measurement of the x-ray energy below 22 keV, the scattered or background radiation should be as low as possible. It is desirable, therefore, to have a source which is fabricated from cadmium-109 of high radiochemical purity and high-specific activity. This high-purity cadmium-109 can be produced in a cyclotron by the following reaction: $^{109}Ag(p,n)^{109}Cd$.

A source is being fabricated to contain approximately 80 mCi of cyclotron-produced cadmium-109. This source will be loaned to the U. S. Naval Research Laboratory, Washington, D. C., for use in detecting traces of lead by fluorescence x-ray analysis on air filters. The L x ray of lead is produced by the absorption of the 22-keV x ray from cadmium-109.

The cyclotron target was a solid block of highly purified natural silver metal. It was proton bombarded for 13 hr to yield approximately 100 mCi of cadmium-109. The reaction occurs in the first approximately 0.005-in. surface of the target. A 5-in. square area by 0.005-in.-thick layer was dissolved from the silver block by using two 100-ml volumes of 8.0 *N* $HNO_3$ solution. This nitric acid solution contained the cadmium-109, with traces of cobalt-57, cobalt-56, and silver-105-106.

The method chosen for the separation of silver from cadmium-109 was to extract the silver nitrate from 8.0 *N* $HNO_3$ solution with 30% 0′0′0′tri-isooctylphosphothionate-70% hexane.[4,5] Three extractions removed the silver such that no silver chloride precipitated upon addition of dilute HCl solution. Losses of cadmium-109 into the organic layer were less than 3%.

Traces of cobalt-56 and cobalt-57 were separated from cadmium-109 by ion exchange. The solution from the solvent extraction was boiled to near dryness to remove the nitric acid and diluted with distilled water to 0.1-0.2 *N* acid. The cobalt-56-57 and cadmium-109 were adsorbed from this solution on a small (1.0 cm by 9.0 cm) Dowex 50, X-8, 200-mesh resin column. Elution with 0.2 *N* HCl selectively removed the cadmium-109 from the cobalt-56-57 which remained on the resin bed.

---

[4]R. E. Lewis and T. A. Butler, *Reactor Production and Characterization of Cadmium-109*, ORNL-4247, Oak Ridge National Laboratory (1968).

[5]T. H. Handley and J. A. Dean, *Anal. Chem.* 32, 1878-83 (1960).

A Gamma Ionization Chamber (GIC), which measures the radiation with a $4\pi$ geometry, was calibrated using a National Bureau of Standards cadmium-109 source. The presently accepted data[6] of 460-day half-life and 3.8% disintegration rate of the 88-keV gamma in the decay of cadmium-109 were used in the standardization of the GIC.

A 10-mCi cadmium-109 source was fabricated by absorbing the solution containing the radioactivity in porous graphite and evaporating the solution to dryness. This graphite piece was a 1-mm-thick by 5-mm-diam disk. It was then encapsulated into an aluminum source holder with a 0.006-in. aluminum window.

Efforts will be made to electroplate the cadmium-109 onto a suitable metal backing without the addition of carrier material.

F. Reactor Products Pilot Production (Production and Inventory Accounts)

| Processed Units | | Service Irradiations | |
|---|---|---|---|
| Radioisotope | Amount (mCi) | Type | Number |
| Calcium-47 | 11 | Vanadium | 2 |
| Copper-67 | 14 | $^{152}Gd_2O_3$ | 1 |
| | | Tungsten-180 | 1 |
| | | Platinum-196 | 3 |
| | | Platinum-Tin | 1 |
| | | Iron-Nickel | 1 |

ACCELERATOR-PRODUCED ISOTOPES - 08-01-02

A. Biomedical Radioisotopes

1. Gallium-67

The objectives of this program are to determine the optimal target configuration for gallium-67 (78.2 hr) production by the $^{68}Zn(p,2n)^{67}Ga$ reaction in acceptable purity and quantity and to provide gallium-67 for clinical applications research and development. Interest in this isotope has been spurred by evidence, obtained by the Medical Division of Oak Ridge Associated Universities (ORAU), of a high uptake of carrier-free gallium-67 by lymphoid tumors in both animals and humans.

Gallium-67 decays by electron capture with the emission of four main gamma rays of 93, 185, 300, and 394 keV with intensities of 42, 24, 17, and 5%, respectively.

---

[6] S. A. Reynolds, ORNL, private communication.

Four weekly shipments of 100-mCi batches of gallium-67 citrate were supplied to ORAU as part of the Cooperative Group to Study Localization of Radiopharmaceuticals (CGSLR) project, with minor fractions of each batch being packaged as the chloride and supplied to customers. Demand for this radionuclide as a radiochemical in the chloride form has fallen off markedly during the last month, presumably due to the advent of a commercial supply as a radiopharmaceutical ready for injection. The sales level of gallium-67 will be followed through the end of the year to determine the rate of usage other than ORAU.

Development work has been continued[7] on an electrodeposited zinc-on-copper target design. An 8.5-mil-thick plate was prepared from a chloride system and irradiated in the ORNL 86-Inch Cyclotron at a 15° angle for 1 hr with 22-MeV protons at a current of 200 μA. This target showed no visible signs of beam damage and produced approximately 40% greater amounts of gallium-67 than the 5-mil target run previously. This was expected since it was known that the 5-mil target was not thick enough to degrade the proton beam energy below the $^{68}Zn(p,2n)^{67}Ga$ reaction threshold. The effect of target thickness will be investigated in order to optimize production rates and target costs. Additional work will be carried out using natural zinc to develop and test an electroplating procedure suitable for routine preparation of enriched zinc-68 targets. Present data would indicate that an 8.5-mil-thick zinc-68 target could require about $1,200 worth of zinc-68, with an additional $400 worth of material tied up in electrolyte inventory. The durability of this target design to bombardment with different beam current intensities will also be investigated before a production demonstration run is undertaken with an enriched zinc-68 target.

Two production runs were also performed using a Ti-Cu-Zn alloy target. The original "certified" assay received from the supplier of the alloy showed no titanium content, but upon dissolution in concentrated HCl a violet color characteristic of $Ti^{3+}$ was observed, and gamma pulse height analysis of the dissolver solution showed vanadium-48 which would be a titanium proton reaction product. The approximately 1.3% copper present in the alloy also precipitates upon dissolution in HCl as CuCl and, it was discovered later, scavenges approximately 30% of the carrier-free gallium-67 from the dissolver solution. The chemical separation employed does separate the vanadium-48 from the gallium-67 product effectively, but this target cannot be used for routine production until additional chemical development is performed to reduce initial dissolver solution losses. Such development will be undertaken as time allows.

2. Indium-111

The objectives of this program have been to define and optimize the pertinent production parameters for the economical production of indium-111 of satisfactory

---

[7]A. F. Rupp, *Radioisotope Program (8000) Progress Report for October 1971*, ORNL-TM-3627, Oak Ridge National Laboratory, p. 5.

quality for radiopharmaceutical manufacture. The current objectives are to obtain practical operating experience of the procedures developed by pilot production and to provide this radionuclide to interested customers as a special research material — in batch lots — for their evaluation. Indium-111 has been suggested for such studies as spinal-cerebral cisternography, aerosol lung studies, delayed brain scanning, visualization of the lymphatic system, metabolic studies of indium-labeled macroaggregates and colloids, and tumor localization. Indium-111 has gamma emissions of 173 keV (89%) and 247 keV (94%) ideally suited for external detection and an optimal half-life (2.83 days) for labeling and distribution studies which must be carried out over 24 hr or longer.

With the initiation of weekly indium-111 production, four batches of indium-111 were prepared and portions supplied to interested clinicians as a special research material. In response to customer requests, the indium-111 shipping schedule has been changed from Tuesday to Friday with a decay allowance to 0800 (EST) of the next Monday.

Preliminary attempts to prepare an electroplated cadmium-on-copper electrodeposited target for indium-111 production via the $^{112}Cd(p,2n)^{111}In$ reaction have been unsuccessful. This reaction path should offer the advantages of both higher cross sections and more efficient beam utilization.

3. Rubidium-83

The chief objectives of this work are: (1) to elucidate, define, and optimize pertinent production parameters for preparing a high-purity product acceptable for human use and (2) to make sufficient material available to cooperative participants on an "excess material" basis for their medical and research applications and evaluation. Rubidium-83 (86 days) is prepared by cyclotron bombardment of strontium-84.

Long-lived, high-purity rubidium-83 for use in long-term metabolic studies of patients with Duchenne muscular dystrophy has been prepared at ORNL by bombardment of enriched $^{84}SrCO_3$ targets with 22 MeV protons in the ORNL 86-Inch Cyclotron. The three principal nuclear reactions that yield rubidium-83 under these irradiation conditions are shown below:

$$^{84}Sr(p,2n)^{83}Y \xrightarrow{\varepsilon,\beta^+} {}^{83}Sr \xrightarrow{\varepsilon,\beta^+} {}^{83}Rb$$

$$^{84}Sr(p,pn)^{83}Sr \xrightarrow{\varepsilon,\beta^+} {}^{83}Rb$$

$$^{84}Sr(p,2p)^{83}Rb$$

Enriched strontium-84 was selected as the target isotope to maximize the amount of rubidium-83 produced with the proton beam energy available (i.e., $E_p \leq 22$ MeV) and to minimize production of other rubidium radioisotopes which would result in unwanted radiation dose to the patient.

During the course of this work, the decay of a high-purity rubidium-83 sample has been followed for more than five half-lives, and the half-life has been determined to be 86.2 ± 0.1 days. The high-energy (≥ 520-keV) photon energies and relative intensities of rubidium-83 have also been determined from spectral data collected for the half-life determination. These results are summarized in Table 4 and agree well with the values of Gunnink *et al.*[8] A manuscript of this work has been prepared and will be submitted for publication within the next reporting period.

Table 4. Rubidium-83 Gamma-Ray Energies and Relative Intensities

| This Work | | Gunnink *et al.* | |
|---|---|---|---|
| $E_\gamma$ (keV) | Relative Intensity | $E_\gamma$ (keV) | Relative Intensity |
| 520.35 ± 0.10 | 283 ± 2 | 520.43 | 283 |
| 529.54 ± 0.10 | 184 ± 1 | 529.65 | 183 |
| 552.50 ± 0.10 | 100 | 552.63 | 100 |
| 648.55 ± 0.33 | 0.607 ± 0.057 | | |
| (680.38) | (0.146) | | |
| 788.93 ± 0.22 | 4.30 ± 0.14 | 790.1 | 4.4 |
| 798.40 ± 0.24 | 1.57 ± 0.11 | | |

## B. Accelerator Pilot Production (Production and Inventory Accounts)

Table 5 gives the November 1971 accelerator runs for ORNL and non-ORNL programs.

Table 5. Accelerator Irradiations and Runs for November 1971

| Product | No. of Runs | Time (hr:min) | | | Total Charges |
|---|---|---|---|---|---|
| | | Beam | Misc. | Total | |
| | | ORNL Programs | | | |
| Cobalt-57 | 1 | 45:20 | 1:15 | 46:35 | $ 4,583 |
| Cobalt-61 | 8 | 16:00 | 5:40 | 21:40 | 2,112 |
| Gallium-67 | 6 | 16:10 | 5:55 | 22:05 | 2,292 |
| Indium-111 | 4 | 12:55 | 5:45 | 18:40 | 1,930 |
| Europium-150 | 1 | 20:00 | 1:15 | 21:15 | 2,031 |
| Gadolinium-151 | 1 | 3:00 | 1:00 | 4:00 | 393 |
| Target Test | 1 | 1:00 | 1:15 | 2:15 | 221 |
| Total | | | | | $13,562 |
| | | Non-ORNL Programs | | | |
| Gold-195 | 1 | 5:00 | 1:15 | 6:15 | $ 1,447 |

[8] R. Gunnink, J. B. Niday, R. P. Anderson, and R. A. Meyer, *Gamma Ray Energies and Intensities*, UCID-14539, University of California Radiation Laboratory (1969).

## C. Rare-Earth Radionuclides

### 1. Terbium-156

The beta feeding of the 2044.89-keV level was established as 74.1%. Again, since there are no gamma rays feeding this level, we are able to adjust the relative intensities of the gamma rays de-exciting this level and from that normalize all other gamma-ray intensities. Table 6 lists those of the 108 gamma rays in gadolinium-156 produced by the decay of europium-156 which have absolute intensities in excess of 1%.

Table 6. Terbium-156: Energies and Absolute Intensities of the Gamma Rays in Excess of 1%

| Gamma-Ray Energy (keV) | Absolute Intensity (%) |
|---|---|
| 88.967 | 18. |
| 119.93 | 1.5 |
| 155.15 | 1.6 |
| 199.21 | 4.7 |
| 262.58 | 5.88 |
| 296.54 | 4.30 |
| 356.42 | 13.3 |
| 422.38 | 7.71 |
| 534.32 | 66.0 |
| 780.14 | 2.44 |
| 925.82 | 3.92 |
| 949.18 | 1.49 |
| 959.78 | 1.88 |
| 1037.84 | 1.05 |
| 1065.18 | 10.9 |
| 1067.24 | 2.8 |
| 1154.16 | 10.6 |
| 1159.08 | 7.33 |
| 1222.40 | 31.6 |
| 1266.58 | 1.01 |
| 1334.46 | 2.59 |
| 1421.66 | 12.4 |
| 1646.20 | 3.70 |
| 1845.43 | 4.11 |
| 2014.34 | 1.15 |

FISSION PRODUCTS - 08-01-03

A. Krypton-85 Enrichment

The units were shut down for several days this month while the cooling tower was being cleaned. After cleaning was completed, the metering pumps on the pH control and anti-corrosion chemicals gave some trouble and needed adjustment. The system is now back in normal operation.

Thirteen liters of feed krypton was received, and this material will be used to replace the depleted ends and raise the pressure in units A and B (see Fig. 2).

| Unit | Activity in Unit (Ci) | Time Since Last Product Removal (days) | Count Rate in Product Section (counts/min) Oct. 1971 | Nov. 1971 |
|---|---|---|---|---|
| A | 120 | 130 | 4,700 | 5,100 |
| AB | Xenon | 90 | — | — |
| B | 120 | 130 | 1,600 | 1,600 |
| C | 1784 | 320 | 6,400 | 5,800 |
| CD | 2056 | 90 | 14,550 | 14,600 |
| D | 1647 | 320 | 6,600 | 6,200 |

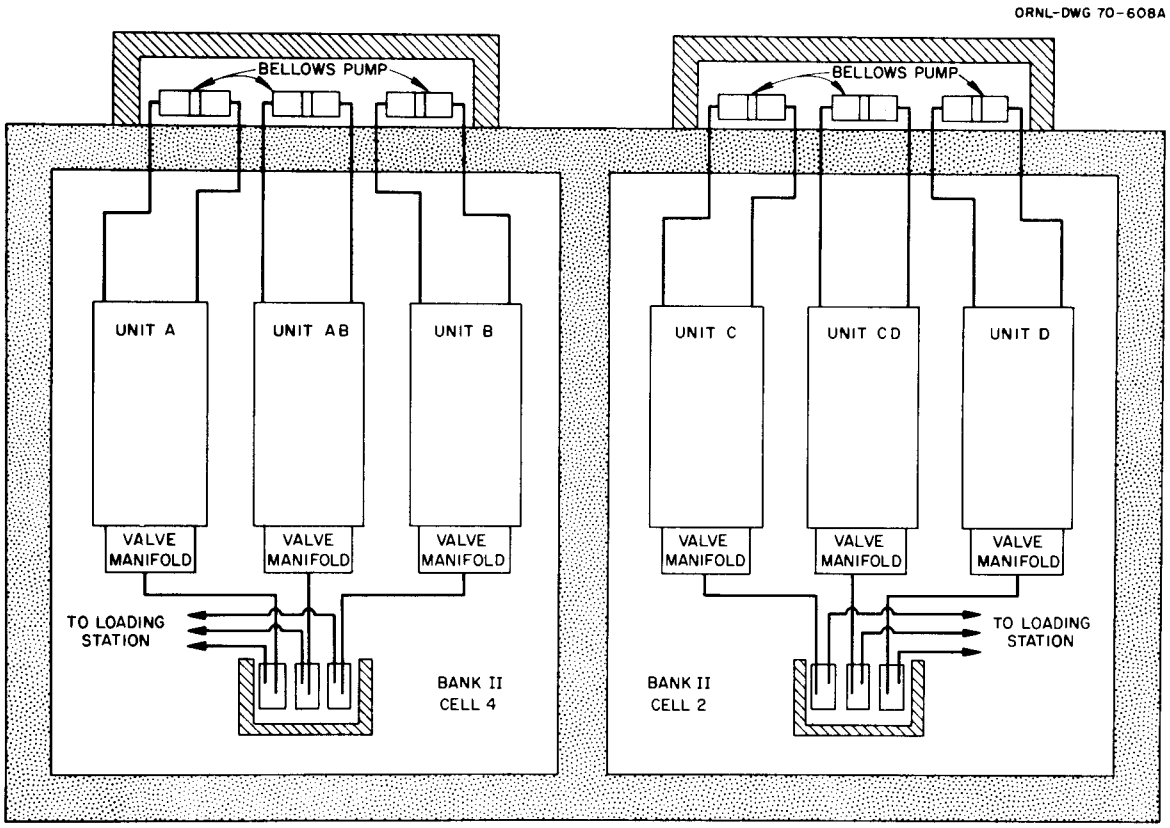


Fig. 2. Schematic Arrangement of Krypton-85 Columns.

## B. Cesium-137 Gamma Source Development

Cesium-137 chloride has been the compound of choice for radiation sources in applications of moderate temperature conditions. In many respects cesium chloride is the ideal compound; the cesium weight per unit volume is high, the radiation resistance of the CsCl is excellent, the compatibility with stainless steel at ambient temperatures is excellent, and its preparation is straightforward. However, the projected conditions of use of cesium-137 gamma sources are increasingly severe with respect to temperature, and some applications indicate the need for a cesium source material which has low solubility. In view of these projected conditions of use, the testing of $^{137}CsCl$ at elevated temperatures is being done and the development of a low solubility, temperature resistant source form of cesium is being studied.

### 1. Alternative Cesium-137 Source Form Development

#### a. Thermal Stability of Cesium Aluminosilicate Products

The stability in a high-temperature environment of cesium aluminosilicates selected from those prepared under various conditions has been investigated using a high-temperature optical microscope (1750°C maximum). The emphasis and criteria in the study were the same as those for cesium tantalates and niobates reported previously.[9]

The results of the microscopic observation summarized in Table 7 indicate that all selected products (except AU-14) did not melt completely until heated to temperatures in excess of 1300°C. None of them showed any visible sign of incongruent melting, but several products had a tendency to decompose slightly. No relation is apparent between the method of preparation and the temperature at complete melting. However, the product with a low Si/Cs ratio (e.g., OC-10) seems to have a very high thermal stability (1695°C at complete melting.) In spite of the high calcining temperature (1400°C), sample OC-11 exhibited a stronger tendency to decompose than any other samples at elevated temperatures. There appears to be an indication that products from the reaction between $Cs_2O \cdot nSiO_2$ and $Al(OH)_3$ are generally more resistant to thermal decomposition than those from other methods when calcined at 1100°C (compare OC-2 and -10 with OC-4, -6, and -8).

---

[9]A. F. Rupp, ORNL-TM-3501, p. 10.

Table 7. Characteristics of Selected Cesium Aluminosilicate Products

| Sample Number | Calcining Temp. (°C) | Atomic Ratio Si/Cs | Atomic Ratio Al/Cs | Distilled Water Insolubles (wt %) | Melting Temp.[d] (°C) Incongruent | Melting Temp.[d] (°C) Complete | Evidence of Decomposition Before Melting[d] | Estimated Volumetric Spec. Act.[e] ($Ci/cm^3$) |
|---|---|---|---|---|---|---|---|---|
| AU-14[a] | 1100 | 1.04 | 1.18 | 40.2 | — | — | — | 59 |
| OC-2[a] | 1100 | 1.05 | 1.14 | 85.9 | — | 1305 | — | 59 |
| OC-4[b] | 1100 | 1.02 | 1.14 | 63.0 | — | 1355 | slight | 60 |
| OC-6[c] | 1100 | 1.15 | 1.09 | 80.3 | — | 1320 | slight | 59 |
| OC-8[c] | 1100 | 1.08 | 1.14 | 85.2 | — | 1410 | slight | 59 |
| OC-10[a] | 1100 | 0.67 | 1.15 | 77.8 | — | 1695 | — | 62 |
| OC-11[a] | 1400 | 0.89 | 1.16 | 84.1 | — | 1665 | appreciable | 60 |

[a]Preparation of $Cs_2O \cdot nSiO_2$ from $Cs_2CO_3$ and $SiO_2$, followed by reaction with either $Al_2O_3$ (sample AU-14) or $Al(OH)_3$ (samples OC-2, OC-10, and OC-11).

[b]Simultaneous reaction of $Cs_2CO_3$, $SiO_2$, and $Al(OH)_3$.

[c]Preparation of $Cs_2O \cdot Al_2O_3$ from $Cs_2CO_3$ and $Al(OH)_3$, followed by reaction with $SiO_2$.

[d]Based on observation under the high-temperature microscope (1750°C maximum).

[e]Assume an isotopic purity of 36.5% $^{137}Cs$. The volumetric specific activity of $^{137}CsCl$ gamma source is approximately 100 $Ci/cm^3$.

### b. Chemical Composition and Volumetric Specific Activity of Cesium Aluminosilicate Products

For products resulting from the initial reaction mixture of the composition $Cs_2O \cdot Al_2O_3 \cdot 2SiO_2$, the increase in both the Si/Cs and Al/Cs ratios (1.02-1.08 and 1.14-1.18, respectively, except OC-6) was small based on the initial composition. The slightly greater value of the Al/Cs ratio than the Si/Cs ratio presumably implies that $Cs_2O$ and $SiO_2$ are somewhat less stable than $Al_2O_3$ during the reaction. A larger increase in the Si/Cs ratio than those above is noted with reaction mixtures of the composition $Cs_2O \cdot Al_2O_3 \cdot SiO_2$, indicating instability of $Cs_2O$ in such mixture.

The volumetric specific activities ($Ci/cm^3$) of the selected cesium aluminosilicate products have been calculated to be around 60 $Ci/cm^3$ based on the product compositions and the estimated value of density ($\sim$3.2 $g/cm^3$). An isotopic purity of 36.5% cesium-137 was assumed in the calculation. The relative variation in the specific activity as shown in Table 7 is seen to be considerably smaller than the variation in the Si/Cs ratio (e.g., compare OC-8 with either OC-10 or -11).

### c. Assessment of Cesium Aluminosilicates as Cesium-137 Gamma Source

Cesium aluminosilicates have desirable characteristics that render them potentially useful cesium-137 gamma source compounds. A product having the volumetric specific activity of approximately 60 $Ci/cm^3$ with low solubility (up to about 86% insoluble; powder sample) and high melting temperature (in excess of 1400°C) can be prepared by a relatively simple method that requires no pressure vessel. Because of their lower density ($\sim$3.2 $g/cm^3$, estimated) as compared with either cesium tantalates (6.5-7.0 $g/cm^3$, estimated) or niobates (4.8-5.5 $g/cm^3$, estimated), the aluminosilicates have an advantage in that the mass absorption coefficient for the gamma radiation would be appreciably smaller.

### d. Thermal Stability of Cesium Tantalates

Due to the limitation of the high-temperature stage (1350°C maximum) for the microscope, it was not possible to determine temperatures at complete melting of the cesium tantalate products.[10] These temperatures have been measured with a new high-temperature stage (1750°C maximum) for the selected products reported previously[10] and are tabulated in Table 8.

---

[10] A. F. Rupp, ORNL-TM-3501, p. 11.

Table 8. Characteristics of Selected Cesium Tantalate Products

| Sample No.[a] | Calcining Temp. (°C) | Initial Mole Ratio $H_2O/Ta_2O_5$[c] | Atomic Ta/Cs Ratio | Seawater Insolubles (Wt %) | Melting Temp. (°C) Incongruent | Melting Temp. (°C) Complete | Evidence of Decomp. Before Melting | Estimated Volumetric Spec. Act.[d] ($Ci/cm^3$) |
|---|---|---|---|---|---|---|---|---|
| | | | | Molten $CsOH-Ta_2O_5$ Reaction Product | | | | |
| JE1 | 750 | Very low | 0.89 | 80.9 | - | 1415 | 750-920°C | 82.3 |
| M11 | 1000 | Very low | 1.28 | 93.7 | - | 1445 | None | 67.8 |
| | | | | $CsOH-Ta_2O_5$ Slurry Reaction Product | | | | |
| M5 | 750 | High | 1.18 | 84.9 | - | 1015 | None | 71.7 |
| JE2A | 750[b] | Very high | 1.11 | 57.9 | - | 1365 | 600-950°C | 73.4 |
| JE2B | 750[b] | Very high | 1.12 | 86.3 | - | 1635 | 700-900°C | 72.9 |
| M3 | 750 | Medium | 1.10 | 88.3 | - | 1385 | ~1100°C | 73.5 |
| M4 | 1000 | Medium | 1.46 | 89.0 | - | 1505 | ~1100°C | 62.7 |
| | | | | $Cs_2CO_3-Ta_2O_5$ Slurry Reaction Product | | | | |
| M14 | 750 | High | 0.92 | 87.0 | - | 990 | None | 81.2 |
| M13 | 750 | Medium | 1.10 | 90.0 | - | 1405 | None | 73.8 |
| JE3A | 750[b] | Medium | 1.03 | - | 1000 & 1285 | 1355 | None | 76.4 |
| M15 | 1000 | Medium | 1.55 | 100.0 | - | 1405 | None | 60.5 |
| JE3B | 750 | Medium | 1.03 | 86.8 | - | 1455 | 1190°C | 76.4 |

[a]Reaction for M5 and M14 was carried out without a reflux condenser. Reaction time for JE2B and JE3B was twice as long as that for JE2A and JE3A.

[b]In nitrogen atmosphere.

[c]Includes water produced in the reaction.

[d]Assume an isotopic purity of 36.5% cesium-137. The volumetric specific activity of $^{137}CsCl$ gamma source is approximately 100 $Ci/cm^3$.

## C. Cesium-137 Pilot Production (Production and Inventory Accounts)

### 1. Processing and Process Status

A batch of approximately 110,000 Ci of cesium-137 carbonate intermediate product was prepared for conversion to $^{137}CsCl$. On the first attempt to crystallize the cesium oxalate on this cycle the yield was very poor; therefore, the entire batch was reworked. The second cycle performed normally, yielding the 110,000 Ci of intermediate product from a starting batch of 210,000 Ci of purified cesium alum. Recycled materials were concentrated and stored temporarily while the cesium-137 alum purification cell was decontaminated for agitator replacement and valve repair. This maintenance should be complete by December 1, after which cesium-137 accumulation crystallizations will be resumed. The current cesium-137 process status is as follows:

| Item | Cesium-137 (Ci) |
|---|---|
| In-process material | 995,000 |
| $^{137}CsCl$ products | 46,500 |
| Sources in fabrication | 0 |
| Completed sources awaiting shipment | 70,900 |
| Total | 1,112,400 |

### 2. Operational Summary

| Item | November 1971 | | FY 1972 | |
|---|---|---|---|---|
| | No. | Amount (Ci) | No. | Amount (Ci) |
| HAPO shipments received | 0 | 0 | 1 | 414,200 |
| Product batches prepared | 0 | 0 | 6 | 70,000 |
| Sources fabricated | 0 | 0 | 32 | 50,000 |
| Special form containers loaded | 0 | 0 | 13 | 600 |
| Sources shipped | 1 | 120 | 16 | 18,620 |
| Special form containers shipped | 0 | 0 | 13 | 1,500 |

### 3. Current Orders

Current orders for cesium-137 as sources or bulk powder are shown below:

| Customer | Amount (Ci) | Estimated Shipping Date |
|---|---|---|
| Brookhaven National Laboratory | 203,000 | FY 1972 |
| Atomic Energy of Canada, Ltd. | 42,100 | March 1972 |
| Lockheed-Georgia Company | ∿35,000 | a |
| Total | 280,100 | |

[a]Sources are in storage awaiting receipt of customer's containers.

An order is on hand for ∿112,200 Ci as bulk powder to be scheduled and shipped as released by customer.

## D. Strontium-90 Pilot Production (Production and Inventory Accounts)

### 1. Processing and Process Status

A fraction of $^{90}Sr_2TiO_4$ was prepared from the $^{90}SrCO_3$ test batch run in October by mechanically blending the $^{90}SrCO_3$ with $TiO_2$ then calcining the blend at 1300°C for 8 hr under argon. The resulting powder was similar in appearance to fuel prepared by the normal slurry method, but its heat output showed the same discrepancy from the theoretical as had the carbonate and oxide forms from this batch (roughly 90% of theoretical).

A 10-cm-diam pellet was pressed in the hot-press using the full batch (240 W) with two titanium wire support screens. The pellet cracked during ejection from the die, but it was intact enough for measurement; the power density was 1.21 W/cm$^3$. The pellet was crushed and re-pressed under the same conditions except that no titanium wire was used. The titanium that had been in the first pellet was not detected during the crushing; it had either reacted with the fuel or was broken up too finely for differentiation from pieces of fuel. The second pellet remained intact through ejection, measuring, and handling operations but broke during overnight storage in a desiccator. The power density of the second pellet was only 1.09 W/cm$^3$. In each case, the pellet cracked from top to bottom at several places, with the cracks originating almost in the center of the pellet.

A second test batch of strontium-90 was processed, first by oxalate to remove some of the rare earths, then by carbonate to form $^{90}SrCO_3$. Analysis of this product is underway, after which it will be blended with $TiO_2$ for another test pellet.

The current strontium-90 process status is as follows:

| Item | Strontium-90 (Ci) |
|---|---|
| In-process material | 911,000 |
| Strontium-90 products | 458,700 |
| Sources in fabrication | 0 |
| Returned SNAP sources | 340,900 |
| Completed sources awaiting shipment | 64,600 |

### 2. Operational Summary

| Item | November 1971 | | FY 1972 | |
|---|---|---|---|---|
| | No. | Amount (Ci) | No. | Amount (Ci) |
| HAPO shipments received | 0 | 0 | 0 | 0 |
| Product batches prepared | 0 | 0 | 1 | 40,800 |
| Sources fabricated | 0 | 0 | 1 | 49,600 |
| Special form containers loaded | 0 | 0 | 0 | 0 |
| Sources shipped | 0 | 0 | 7 | 95,000 |
| Special form containers shipped | 1 | 100 | 7 | 600 |
| Shipments to customers | 0 | 0 | 12 | 45,900 |

3. Current Orders

Current orders for strontium-90 as sources or bulk powder are as follows:

| Customer | Amount (Ci) | Estimated Shipping Date |
|---|---|---|
| U. S. Navy | 411,380 | a |
| U. S. Navy | 208,000 | a |
| Total | 619,380 | |

[a]Further work and subsequent shipment pending receipt of instructions from customer.

4. URIPS-8 Generator Assembly

The four URIPS-8 generator assemblies, shields, and auxiliary equipment and parts have been received from Aerojet General and Battelle Memorial Institute and have been inventoried to ascertain that we have all the needed parts.

E. Short-Lived Fission Products Pilot Production (Production and Inventory Accounts)

| Isotope | Number of Batches | Amount (Ci) |
|---|---|---|
| Xenon-133 | 2 | ∿800 |
| Iodine-131 | 1 | 42 |
| Niobium-95 | 1 | 12 |
| Total | | 854 |

SOURCE DEVELOPMENT - 08-01-04

A. Radiation Processing (Not Supported by 08 Program; WFO Account)

Pollution of rivers by dye waste effluent from textile mills and chemical manufacturers is a serious problem. Past experimental work has shown that radiolytic oxidation of the waste solutions may be a practical method of destroying certain dyes and chemicals. The purpose of this investigation is to study and develop an economically feasible method to do so. A cobalt-60 gamma radiation source is being used to irradiate samples under a high pressure oxygen atmosphere. The solutions include both individual dyes and mixtures of dyes. This work is being supported by the American Association of Textile Chemists and Colorists (AATCC) and the Environmental Protection Agency.

Tests were made to determine whether or not the presence of charcoal during the gamma irradiation of dyes causes an increase in the decolorization greater than can be expected due to the combined effect of adsorption plus irradiation.

The dye selected for this experiment was from a group of four standard dyes used in the Rhode Island section of the AATCC evaluation of decolorization methods for textile effluents.* This dye, Disperse Blue 3, was selected because of its resistance to radiation decolorization and low absorption rate on charcoal. Because the standard solution contains some dye particles after it has been prepared for a short time, the determination of color for the standard is difficult. Two methods were used to overcome this difficulty: (1) filtration of the standard before use in the experiment, and (2) using as a color standard the color developed at a dose of $10^6$ R. Each table of data, therefore, is identified as to the standard of comparison used. Future work will be carried out using a different dye standard to overcome this problem.

Color evaluations for the tests were made using a procedure developed by the AATCC in which the color absorbance was determined with a spectrophotometer, using distilled water as a blank for each wavelength measured. Absorbance of the 430-, 530-, and 630-mμ wavelengths was measured.

$$\text{Color Intensity} = (X + Y + Z)D$$

where

X, Y, and Z = the optical density at the selected wavelength

D = the dilution factor (dilution of samples with distilled water to bring it into color range of the instrument)

Percent color reduction is $(A - B)/A \times 100$, where A = color units of the untreated sample and B = color units of the treated sample.

Where chemical oxygen demand measurements were made, a standard procedure was used.[11]

---

*Removal of Color from Textile Wastes. Rhode Island Section of the American Association of Textile Chemists and Colorists, Intersectional Contest 1971.

[11] *Standard Method for the Examination of Water and Water Waste.* American Public Health Association, Inc., 12 ed., 1965, pp. 510-14.

To cancel the effect of simple charcoal adsorption, charcoal saturated with standard dye solution (unfiltered) was used with the following procedure. One hundred milliliters of granular activated charcoal was exposed to 200 ml of standard dye solution for 16 hr under 2000 psi oxygen and to four successive 100-ml samples of standard solution until no significant color reduction was observed. The Disperse Blue 3 standard solution consisted of 40.86 g of orthophenyl phenol, monosodium phosphate to adjust solution to pH 6.5, 2.27 g alkylaryl sulfate, 40.86 g dye BNG Blue, and 27 gal of tap water.

Final color measurements were made after filtration through 0.8-micron millipore filters media to remove solids, except as noted otherwise in the tables.

Feed samples for various irradiation tests, except those shown in Table 9, were unfiltered standard solution containing particles of dye that could be removed by millipore filtration. The dye particles are solubilized during irradiation at $10^6$ R and contribute to intensification of the color at $10^6$ R as shown in Table 10. The results shown, where unfiltered feed was used, may, therefore, be conservative.

Table 9. Comparison of Charcoal and Non-Charcoal Irradiation Using Millipore Filtered Feed (MPF)

| Sample | Treatment | Color Units (Absorbance) | COD | % Change From Std |
|---|---|---|---|---|
| 11A | Standard dye sample MPF | 1.375 | a | Standard |
| $11A^x$ | Standard 11A irradiated only. No charcoal. $10^6$ R in 1 hr 12 min. | 0.685 | a | 50 |
| $11AX^1$ | Standard 11A irradiated on saturated charcoal. $10^6$ R in 1 hr 12 min. | 0.187 | a | 86 |

[a]Not determined.

Table 10. Solubilization of Dye Particulates During Irradiation

| Sample | Treatment[a] | Color Units (Absorbance) | COD | % Change From Std |
|---|---|---|---|---|
| 1 | Standard solution, no treatment or filtration | 2.072 | 752 | |
| 2 | $10^6$ R in 6 min MPF | 2.376 | 555 | +15 |
| 3 | $10^6$ R in 1 hr 13 min MPF | 2.615 | b | +26 |
| 4 | $5 \times 10^6$ R in 30 min MPF | 1.000 | 347 | -52 |

[a]No charcoal present; gamma irradiation under 1000 psi oxygen.

[b]Not determined.

Table 10 shows the effect of the increase in color absorbance due to solubilizing the dye particulates in the standard solution by irradiation.

Data from a series of samples irradiated with dye-saturated charcoal are shown in Table 11. In this series the color reduction averaged 82%.

Table 11. Results from Samples Irradiated with Dye-Saturated Charcoal

| Sample | Sample Description and Treatment | Color Units (Absorbance) | COD | pH | % Change From Std |
|---|---|---|---|---|---|
| 1A | 50 ml Standard feed without MPF on saturated charcoal; 5 x $10^5$ R delivered in 36 min | 0.440 | 128 | 8.0 | 83 |
| 2A | 50 ml standard feed without MPF on charcoal used with sample 1A; 1 x $10^6$ R delivered in 1 hr 12 min | 0.488 | a | 8.4 | 81 |
| 3A | 50 ml standard feed without MPF on charcoal used with sample 2A; 1 x $10^6$ R delivered in 1 hr 12 min | 0.454 | a | 7.9 | 83 |
| 4A | 50 ml standard feed without MPF on charcoal used with sample 3A; 2 x $10^6$ R delivered in 2 hr 29 min | 0.204 | a | 8.3 | 92 |
| 5A | 50 ml standard feed without MPF; no charcoal present; 1 x $10^6$ R delivered in 1 hr 12 min | 2.615 | a | 5.3 | Standard |

[a]Not measured.

Reactivation of the charcoal by irradiation is postulated as a mechanism to enhance the utilization of radiation in processing effluents. In Table 12 the charcoal used in the series 1A through 6A was washed with distilled water to remove excess dye solution and irradiated with water under oxygen to remove adsorbed dye. After irradiation, no color was

Table 12. Activation of Charcoal by Gamma Irradiation and Oxygen

| Sample | Sample Description and Treatment | Color Units (Absorbance) | COD | pH | % Change From Std[a] |
|---|---|---|---|---|---|
| 9A | Saturated charcoal washed with five portions of distilled water, after which 50 ml distilled water was added to charcoal and charcoal was irradiated to a dose of $10^6$ R in 1 hr 12 min, 1000 psi oxygen | 0.014 | b | 8.5 | 99.5 |
| 10A | 50 ml of standard solution exposed to charcoal prepared in 9A for 16 hr; No irradiation or pressure | 0.246 | b | 8.4 | 91 |

[a]Table 11 standard was used for comparison.

[b]Not determined.

present in the water used during the irradiation treatment of the charcoal and when a sample of standard dye was exposed to the charcoal without irradiation the adsorptive capacity of the charcoal was shown to have been restored.

## B. Radiation Source Development

An attempt was made to produce two uniform beta sources for extrapolation chamber measurement studies. Each consisted of $^{90}SrCl_2$ incorporated in a 30-mil thickness of polyvinyl acetate in the form of a 4-1/2-in. square. The first contained approximately 0.055 mCi of $^{90}Sr$ and the second contained approximately 5.5 mCi. Five disks were cut from the first source and counted to determine the source uniformity and the average beta particle energy. A maximum variation of ±6.0% was found in the count rate based on the mean of the highest and lowest values. A sample source 2 in. by 2 in. was cut from the more concentrated source and measured for uniformity using a 3-mm collector electrode in the extrapolation chamber. Twenty-five measurements were made on a grid with 9-mm spacing. A maximum variation of ±5.6% was found between the center and corner measurements. Dose rate measurements were made using three different collection electrode sizes (3, 10, and 30 mm). Thermoluminescent dosimeters were also placed on the source center to correlate the extrapolation chamber measurements with those made by this method. A series of measurements will be made as the source size is gradually reduced.

## C. Radioisotope Characterization, Quality Control, and Standards

### 1. Radioisotope Characterization

The NRC Subcommittee on Use of Radioactivity Standards met November 17 and discussed, among other items, the NRC recommendation that compilations in the *Nuclear Data* journals be generally used, and the program to make radiopharmaceutical assays traceable to NBS, triggered by the recently proposed extension of FDA regulation of those materials. With respect to cadmium-109, the group was informed of the recommendation of the ORNL Nuclear Data Group that the gamma percentage be taken as 3.8%. S. A. Reynolds submitted a modernized version of the introduction to the Subcommittee's Guides (*Users' Guides for Radioactivity Standards*, National Academy of Sciences, Washington, D. C., 1967) and was asked to forward it to the university faculty member who has the overall responsibility for the revision.

Our estimates[12] of the thermal-neutron cross sections of calcium isotopes were confirmed by experimental values.[13] Answers were made to inquiries

---

[12] S. A. Reynolds and W. T. Mullins, *Analytical Chemistry Annual Progress Report for Period Ending October 31, 1969*, ORNL-4466, Oak Ridge National Laboratory, p. 74

[13] F. P. Cranston and D. H. White, *Nucl. Phys.* A169, 95-100 (1971).

on subjects including activation analysis by isotopic neutron sources and the beta spectrum of krypton-85.

### 2. Radioisotope Special Analysis and Quality Control

An NBS tritiated-water standard was measured, and the result was 0.4% above that of NBS. A specimen certificate for a radionuclide standard was reviewed for a commercial supplier, and several suggestions for clarification and improvement were made. Methods and results for trace radium-226 analyses in selenium and tellurium were reviewed; levels were so low that the very sensitive techniques which were employed were found to be essential.

## D. Radioisotope Safety

### 1. Gas Chromatograph Foils — Cleaning Procedure Tests

A series of tests was made to determine the effect of cleaning procedure on tritium losses. One foil of each activity (250, 500, and 1000 mCi/in.$^2$) was tested by ultrasonically cleaning for 1 hr. The cleaning solvents were 5% alcoholic KOH, heptane, hexane, and toluene. In these tests a new foil was placed in a vial containing 10 ml of solvent. The vial was sealed and immersed in water in a 125-W ultrasonic cleaner. The active surface of the foil was facing up to prevent abrasion of the titanium tritide surface. After the foil was cleaned, the solvent was filtered to remove any titanium tritide which may have been dislodged from the foil. The foil and filter were then rinsed with clean solvent to remove tritium held by the liquid. The combined rinse and filtrate was analyzed by liquid scintillation counting. The amount of activity in the filter was found by heating the filter to 600°C for 2.5 hr and trapping the tritium in a recovery train. The dry foil and the dry filter were examined under a microscope to observe the amount and size of the particulates on the filter and to determine whether particles had been lost from the surface of the foil. The tritium loss from the foil was then determined under the standard operating test conditions (150°C, 1 hr, argon). The entire procedure was repeated three times to obtain the effect of repeated cleaning cycles on the same foil. Radiation measurements made before and after the tests were nearly the same, indicating that the usefulness of the foils was not affected by the tests.

The results of the tests are given in Table 13. Several factors could have affected the tritium losses which occurred in these tests. The corrosion rate of solid titanium in 5% KOH at room temperature is reported to be 0.04 mil/year. The rate would be expected to be higher in the source material because of the porosity of the vapor deposition process used in manufacturing the foils. Even small amounts of corrosion could conceivably alter the surface characteristics of the titanium in such a way as to affect the tritium losses.

The ultrasonic cleaning created considerable shear force at the liquid-metal surface and may have removed any loosely held tritium from the surface. Since these forces are not uniform throughout the cleaner

Table 13. Tritium Losses Due to Foil Cleaning Procedures

| Cleaning No. | Losses During Cleaning (μCi) | | | | | | | | | | | | | | | |
|---|---|---|---|---|---|---|---|---|---|---|---|---|---|---|---|---|
| | In 5% Alcoholic KOH | | | | In Hexane | | | | In Heptane | | | | In Toluene | | | |
| | Filtrate | Filter | Total | Standard Test | Filtrate | Filter | Total | Standard Test | Filtrate | Filter | Total | Standard Test | Filtrate | Filter | Total | Standard Test |
| | | | | | | | 250-mCi/in.$^2$ Foils | | | | | | | | | |
| 1 | 27.8 | 48.4 | 76.6 | 4.0 | 0.18 | 80.7 | 80.9 | 4.1 | 0.78 | 41.7 | 42.5 | 8.3 | 0.62 | 42.7 | 43.3 | 2.6 |
| 2 | 8.9 | 21.8 | 30.7 | 2.3 | 0.05 | 77.3 | 77.4 | 1.8 | 0.14 | 76.9 | 77.0 | 1.4 | 0.54 | 64.5 | 65.0 | 1.3 |
| 3 | 4.6 | 15.3 | 19.9 | 2.1 | 0.03 | 8.7 | 8.7 | 1.7 | 0.02 | 22.1 | 22.1 | 1.0 | 1.62 | 4.5 | 6.1 | 1.4 |
| | | | | | | | 500-mCi/in.$^2$ Foils | | | | | | | | | |
| 1 | 75.2 | 74.6 | 149.8 | 50.7 | 0.16 | 87.2 | 87.4 | 22.3 | 0.31 | 55.4 | 55.7 | 15.3 | 2.11 | 102.5 | 104.6 | 27.3 |
| 2 | 19.6 | 13.5 | 33.1 | 25.2 | 0.05 | 19.9 | 20.0 | 7.2 | 3.72 | 107.7 | 111.4 | 7.4 | 1.09 | 108.0 | 109.1 | 4.4 |
| 3 | 6.9 | 15.2 | 22.1 | 18.5 | 0.11 | 23.9 | 24.0 | 0.4 | 0.14 | 61.1 | 61.2 | 6.2 | 0.29 | 93.5 | 93.8 | 6.0 |
| | | | | | | | 1000-mCi/in.$^2$ Foils | | | | | | | | | |
| 1 | 65.3 | 120.3 | 185.6 | 8.3 | 0.34 | 21.7 | 22.0 | 10.8 | 0.07 | 127. | 127.1 | 10.6 | 0.30 | 353.5 | 353.8 | 9.4 |
| 2 | 1.5 | 46.4 | 47.9 | 3.3 | 2.44 | 199.3 | 201.7 | 3.9 | 0.09 | 76.8 | 76.9 | 3.7 | 0.43 | 135.8 | 136.2 | 2.5 |
| 3 | 0.8 | 12.3 | 13.1 | 3.6 | 0.13 | 32.9 | 33.0 | 5.6 | 0.37 | 93.9 | 94.3 | 2.0 | 0.11 | 145.1 | 145.2 | 5.2 |

tank, some differences are to be expected due to position of the foil in the tank.

Operating time and temperature both affect the losses. The repeated cleaning of the foils would be expected to reduce the losses during operation immediately following cleaning by removing tritium at the foil surface faster than it was being replaced with tritium from the deeper layers of the foil.

After the tests were completed, it was found that the filtrate contained some solids which had passed through the 0.45-μm filters. The seven samples which had not been disposed of were centrifuged and assayed again. The resulting values for tritium in the filtrate indicated that 44 to 97% of the tritium in the filtrate was in the form of fine solids (average of 7 samples 53%). The test results for total tritium loss (filtrate plus filter) should not be significantly affected by these fine particles, but it is of interest to know that they exist when disposing of the waste cleaning solutions. As can be seen in Table 13 most of the losses were found on the filters, indicating that the ultrasonic cleaning was removing solids from the foil surface in significant quantities. The magnitude of these losses suggests that less vigorous cleaning procedures should be sought in order to reduce the losses during cleaning.

Several of the 0.45-μm filters were examined at a magnification of 400X to measure particle sizes of the solids filtered from the cleaning solutions. Each of the filters examined had one or two large particles having widths of about 50-75 μm. Most of the particles were in the range of 0.5-5 μm. The limit of measurement was ∿0.5 μm. Examination of the cleaned foils revealed the areas where the large particles had been dislodged. No instances were found in which separation or peeling of the titanium from the stainless steel backing occurred.

## TECHNOLOGY UTILIZATION - 08-01-05

### A. Information Center

In November, 93 requests for information were filled by dispatch of 179 items. Besides the translation for E. E. Fowler listed below (others are under way), translation of a Russian book on radiation processing of food was partially completed and 13 letters for the Sales office and abstracts were translated. Pertinent NSA abstracts were selected from two issues of NSA and distributed to DID and to Isotopes Division personnel for current awareness. Editing of the DID 600-Word Project Summaries was completed, and work on the industry briefings was continued. Three reports were completed and sent to Reproduction: one on isotope educational experiments, one on iodine-125, and a bibliography on fruits and vegetables.

Accessioned documents in the Center now number 23,100.

| Title | Author(s) | Status (% Complete) |
|---|---|---|
| **Radioisotope Briefings for Industry** | | |
| Minerals | R. H. Lafferty | 80 |
| Aerospace | Helen P. Raaen | 50 |
| Building | F. E. McKinney | 5 |
| Coal | R. H. Lafferty | 10 |
| Food | F. E. McKinney | 10 |
| Paint | R. E. Greene | 5 |
| Petrochemicals | H. P. Raaen | 5 |
| Plastics | R. E. Greene | 5 |
| Pulp and Paper | Martha Gerrard | 10 |
| Stone, Clay, and Glass | R. H. Lafferty | 5 |
| Textiles | Martha Gerrard | 10 |
| **State-of-the-Art Reviews** | | |
| Iodine-125 | Martha Gerrard and P. S. Baker | 100 |
| Technetium-99m: Preparation and Uses | Martha Gerrard and P. S. Baker | 65 |
| Radioisotopes in the Textile Industry | F. J. Miller and P. S. Baker | DID reviewing |
| Self-Diffusion in Liquids | F. J. Miller | 75 |
| Grain Disinfestation | F. E. McKinney | 20 |
| Snow Gaging and Water Management | U. S. Department of Agriculture | Not recieved |
| Radioelectrochemistry | Helen P. Raaen | 90 |
| The Environment and Isotopes | Helen P. Raaen | 98 |
| Semiconductors | Helen P. Raaen | 20 |
| Patent Literature on Process Radiation and Irradiator Design, Part 2. British and Canadian Patents, 1950 through 1970 | R. E. Greene, Helen S. Warren and P. S. Baker | 55 |
| **State-of-the-Art Reviews for *Isotopes and Radiation Technology*** | | |
| Radioisotopes in the Steel Industry, Part 3 | Republic Steel | Not received |
| Potato Sprout Inhibition by Radiation, Part 2 | F. E. McKinney | 50 |
| **Other Reports** | | |
| Selected Abstracts of World Literature on Production and Industrial Uses of Radioisotopes, Part 3 of 1971 | Martha Gerrard and P. S. Baker | 75 |
| Use of Isotopes in Monitoring and Control of Environmental Pollution | W. E. Mott and Martha Gerrard | 90 |
| Fruit and Vegetable Bibliography (revision) | F. E. McKinney | 100 |
| Iodine-131 Production Methods | French report being translated by Martha Gerrard | 50 |
| Presowing Irradiation of Seed | Russian book being translated and edited by Martha Gerrard | Withdrawn as IIC report; will be issued as ORNL translation |
| Special Sources (supplement) | F. E. McKinney | 80 |
| Bibliography of DID Contractor Publications | P. S. Baker | 90 |
| Effect of Gamma Radiation on Nonalcoholic Drinks and Wine - Brandy Products | Russian book being translated by Martha Gerrard and P. S. Baker | 50 |
| Isotope Education Experiments (Elementary) | Roberta Shor | 100 |
| List of AEC Radioisotope Customers, FY 1971 | Ruth Curl (compiler) | 75 |
| Isotope Education Experiments (Advanced) | | 50 |

## B. Isotopes and Radiation Technology

Manuscript for *Isotopes and Radiation Technology* 9(4) was started.

## C. Translation

V. S. Nikishov, A. M. Gurvich, N. D. Tyufuakov, A. S. Shtan, and V. S. Yaskevich, "Effect of Individual Factors on the Efficiency of Luminescent Screens for Neutron Radiography," in *Radiation Technology*, Vol. 6, pp. 58-62, (Reports on) Work Done at the All-Union Scientific Research Institute of Radiation Technology, Atomizdat, Moscow, 1971, Russian translation by Martha Gerrard.

# RADIOISOTOPE SYSTEMS DEVELOPMENT

## OCEANOGRAPHIC AND NATURAL RESOURCES DEVELOPMENT - 08-03-02

### A. Sand Transport Study

Radionuclides appear to be useful tools to study sand transport phenomena and, although many experiments have been conducted to demonstrate their effectiveness as tracers, little is known concerning whether or not the dynamic systems in which they are used can be tagged well enough to achieve quantitative data leading to an understanding of basic mechanisms. The Radioisotope Sand Tracing (RIST) study has progressed through equipment development to the point where important system tagging parameters can be studied.

#### 1. RIST Plug Model for Volume Rate of Sand Transport

During the last field test at Point Mugu, California, in September-October 1971, three plug insertions and sampling were completed. Two of the plugs were in 15 ft of water and one in 20 ft of water. Each plug in 15 ft of water was sampled over 31 hr with a total of 16 cores each, and 7 cores were obtained from the plug in 20 ft of water over a 24-hr period.

In connection with the data collected, a mathematical model of the plug is being developed, which has a twofold purpose. First, the model must calculate the total amount of sand through the plug per unit of time, and, second, the model attempts to describe the mechanisms of the sand transport. In both cases, the calculated results are compared with the field data to insure a close data fit between the two sets of data. This is necessary because the experimental measurements do not directly measure the amount of sand transport but do measure the remaining amount of tagged material (a function of the amount of sand transport) in the plug at the time of measurement.

There appears to be two major forces responsible for the sand movement, water currents, and passing waves. In 15 ft of water there is normally a water current which is more or less parallel to the shore and is called the "along shore current." Part of the energy contained in this current is expended in the movement of the sand. Sand movement due to this current is augmented from the energy deposit from a passing wave.

The wave-energy deposit in the bottom sand appears to cause two types of sand movement. There is a mixing action due, in part, to the orbital motion of the water, with the depth of mixing being a function of the amount of energy deposit. Also, when the energy deposit is sufficient (a function of wave height, bottom topography, and hydraulic properties of the sand grains) some of the sand will be lifted into the water column where it has a greater degree of freedom to be transported by the along shore current.

The basic philosophy of the model assumes that

1. The majority of the transport takes place during and immediately after the maximum energy deposit to the sand (passing of a wave).

2. The tagged sand removal from the surface of the plug is a function of and directly proportional to the amount of incoming sand and the ratio of tagged sand to untagged sand in the surface of the plug.

3. The next movement of tagged sand within the plug is a function of the deposited wave energy, the amount of incoming sand, and the ratio of tagged to untagged sand at the relative position of the tagged sand in the plug.

4. The depth within the plug where movement can occur is a function of wave-energy deposit.

5. The amount of sand leaving the plug (tagged and untagged) equals the amount of sand coming in (results of the bottom elevation monitor); however, this can be modified to allow for fill or erosion should this become the actual case.

For the purpose of calculation, the plug was divided into spatial nodes as shown in Fig. 3.

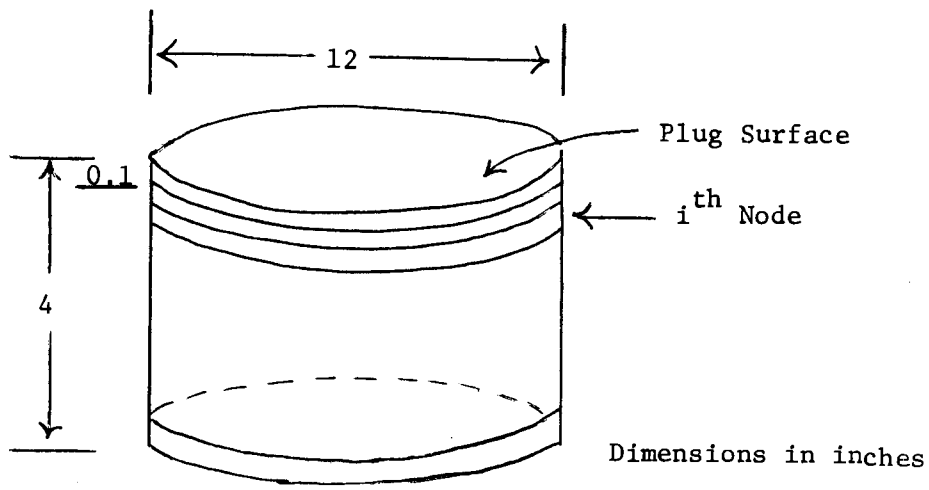


Fig. 3. Spatial Division of the Plug.

There are 40 nodes representing a 4-in. depth of movement observed during the last test; each node is 0.1 in. in height. Major divisions of 10 nodes (1 in. each) are used for preliminary calculations and to compare the calculated data with the experimental data.

A preliminary model to simulate the movement of radioactive sand within the plug and its loss to the water from the top of the plug were simulated with a systems analysis model. Within each 1-in. node, the concentration of radioactive sand was specified to be independent of position. Sand was allowed to move between adjacent nodes and from the top node to the water.

The equations used for the top node, the bottom node, and the general equation for the other nodes were:

Top Node $\dot{R}_1 = \lambda_{1,2}R_2 - (\lambda_{2,1} - \lambda_{0,1})R_1$

General Node $\dot{R}_i = \lambda_{i,i-1}R_{i-1} + \lambda_{i,i+1}R_{i+1} - (\lambda_{i-1,i} + \lambda_{i+1,i})R_i$

$i = 2,N-1$

Bottom Node $R_N = \lambda_{N,N-1}R_{N-1} - \lambda_{N-1,N}R_N$

where

$R_i$ = the fraction of the volume of the $i^{th}$ node that is filled with tagged (radioactive) sand; the remainder of the volume is filled with untagged sand. The tagged and untagged sand were assumed to be uniformly mixed within the volume.

$$= \frac{\text{grains of radioactive sand in the } i^{th} \text{ node (grains)}}{\text{total grains of sand needed to fill the } i^{th} \text{ node (grains)}}$$

$\dot{R}_i$ = time derivative of $R_i$.

$\lambda_{i,i}$ = the fraction of the total sand in the $i^{th}$ node transferred to the $i^{th}$ node per hour.

$\lambda_{0,1}$ = transfer from the top node to the water.

Equations could be written for the transfer of untagged sand between nodes. These equations are not necessary however because, from the definition of $R_i$, the amount of untagged sand in the $i^{th}$ node is given by $(1.0 - R_i)$.

The equations were solved using a hybrid computer. In preliminary simulations, it was assumed that each node was full of sand all of the time. Thus the amount of tagged sand leaving the top node was assumed to be balanced by deposition of untagged sand from the water to the top node. Likewise, the volume of sand leaving any other node was the same as the volume of sand entering this same node. The model, however, could allow for unequal volume transfers between nodes and subsequent changes with time of the depths of the nodes. While the programming of the hybrid computer was in progress, the model was set up on the RIST small digital computer as a delta time model.

## Delta Time Model

### Assumptions

1. TSR = (R)(AS), where TSR = tagged sand removal, R = ratio of tagged to untagged sand in the volume under study, and AS = amount of sand into and out of the volume under study (a variable).

2. Delta time = wave period (7.2 seconds experimentally).

3. Amount of sand into plug = amount of sand removed from the plug (result of bottom elevation monitor).

4. Amount of sand moving is a linear function of the wave height.

5. Amount of sand movement versus depth is a logarithmic function.

The wave height record from the last test was digitized and stored on magnetic tape. From this record a wave height is introduced into the program to determine the depth of interaction (sand movement) and the amount of sand incoming and outgoing. The degree of interaction is:

$$H1 = 2/3\ WH \tag{1}$$

where

H1 = depth of interaction in inches
WH = wave height in feet

$$H5 = H2\ (1 - 0.25) \tag{2}$$

where

H5 = number of 0.1 layers introduced into the water column
H2 = integer part of 10H1

$$AS_i = R_i \sum_{i}^{10H1} e^{-(0.J + Y)} \tag{3}$$

where

$AS_i$ = number of tagged particles removed from $i^{th}$ layer
$R_i$ = ratio of tagged to untagged grains in $i^{th}$ layer
e = base natural log
J = layer number starting at deepest layer
Y = 1.14267 H1 + 1.75733

$$Q = K \sum_{0}^{500} (H5 + 1) \tag{4}$$

where

Q = liters/hr of sand moving through plug
K = constant to change grains into liters

When a layer is acted upon and not introduced into the water column, the tagged grains moving are deposited in the next higher layer which represents the net movement of tagged grains. Five hundred waves is equal to 1 hr in the ocean.

Preliminary results of this model are very promising not only from the standpoint of volume calculation, but appear to offer a long awaited method for the study and understanding of the mechanisms of sand transport.

Variables H1 (depth of sand interaction), $AS_i$ (sand movement vs depth), and H5 (amount of sand introduced into the water column) are all functions of wave energy and have not been experimentally determined in the ocean due to a lack of a method for the measurement prior to this model.

## RADIOISOTOPES SALES

Orders were received from Atomic Energy of Canada, Ltd. for 26,600 Ci of cesium-137 as 13 encapsulated sources and for 1,000 Ci of promethium-147 as bulk oxide powder. A request for quotation was received from Teledyne Isotopes for up to approximately 26 MCi of strontium-90 as encapsulated sources.

Shipments made during the month include 7,000 Ci of tritium to New England Nuclear Corporation, 39 Ci of cerium-141 to Los Alamos Scientific Laboratory, and 100 Ci of krypton-85 to Japan Radioisotope Association. Other shipments include 111,160 mCi of xenon-133, 25 Ci of 21% enriched krypton-85, 30 Ci of 24.2% enriched krypton-85, 500 mCi of 25.9% enriched krypton-85, and 8,320 Ci of tritium.

The radioisotope sales proceeds and shipments for the first four months of FY 1971 and 1972 are given in Table 14.

Table 14. Radioisotope Sales and Shipments

| Item | July thru October 1970 | July thru October 1971 |
|---|---|---|
| Inventory items | $141,861 | $131,114 |
| Major products | 41,970 | 18,750 |
| Radioisotope services | 120,442 | 103,367 |
| Cyclotron irradiations | 30,895 | 47,085 |
| Miscellaneous processed materials | 15,421 | 25,377 |
| Packing and shipping | 27,205 | 24,205 |
| Total | $377,794 | $349,898 |
| Number of shipments | 1,039 | 869 |

## ADMINISTRATIVE

Visitors to the IDC and travel by IDC personnel are given in Tables 15 and 16.

Table 15. IDC Visitors

| Visitor Affiliation | Subject Discussed |
|---|---|
| AEC, Washington, D. C. | AEC-DID programs |
| City Government, Rome, Georgia | Use of isotopes to treat sewage |
| General Electric | Reactor back-up service |
| U.S. Public Health Service Cincinnati, Ohio | Use of ORNL 86-Inch Cyclotron for isotope production |
| Japan Atomic Energy Research Institute, Tokyo, Japan | Tour Isotopes Information Center |
| Bhabha Atomic Research Center Bombay, India | Tour Isotopes Information Center |
| Vanderbilt University Nashville, Tennessee | Bismuth-205 paper and holmium-166m experiment |
| Louisiana State University Baton Rouge, Louisiana | Gamma-gamma correlation calculations and gadolinium-151 experiment |

Table 16. Travel of IDC Personnel

| Site Visited | Purpose of Visit |
|---|---|
| AEC, Washington, D. C. | Attend meeting on mini-Brayton cycle program |
| Knoxville, Tennessee | Millipore Corporation seminar on microbiological analysis of water |
| Augusta, Georgia | Attend meeting on californium-252 |
| Vanderbilt University Nashville, Tennessee | Discuss papers on iodine-132 and bismuth-205 |

# PUBLICATIONS

## JOURNALS

R. E. Lewis, "Production of High Specific Activity Molybdenum-99 for Preparation of Technetium-99m Generators," *Intern. J. Appl. Radiat. Isotop.* 22, 603-05 (1971).

J. Lange, J. H. Hamilton, P. E. Little, D. Hatton, C. Morton, L. C. Whitlock, and J. J. Pinajian, "Decay of $^{68}$Ga and Multipole Admixtures in $^{68}$Zn," *Bull. Am. Phys. Soc.* 16, 1184 (1971).

J. J. Pinajian, "UNISOR: A Look Forward," *Oak Ridge National Laboratory Review* 5(1), 6-9, Fall 1971.

A. V. Ramayya, J. H. Hamilton, P. E. Little, E. Collins, and J. J. Pinajian, "Tables and Graphs for the Analysis of (1-3) $\gamma$-$\gamma$ Directional Correlations," in *Angular Correlations in Nuclear Disintegrations*, edited by H. van Krugten and Bob van Nooijen, Rotterdam University Press, Wolters-Noordhoff Publishing, Groningen, The Netherlands, 1971, p. 261-267.

A. V. Ramayya, J. H. Hamilton, P. E. Little, E. Collins, and J. J. Pinajian, "Some Tables for the Analysis of (1-3) $\gamma$-$\gamma$ Directional Correlations," in *Angular Correlations in Nuclear Disintegrations*, edited by H. van Krugten and Bob van Nooijen, Rotterdam University Press, Wolters-Noordhoff Publishing, Groningen, The Netherlands, 1971, p. 627-636.

## REPORTS

J. H. Gillette, *Isotope Program (5000) Progress Report for Quqrter Ending September 30, 1971*, ORNL-TM-3621, Oak Ridge National Laboratory.

A. F. Rupp, *Isotope Program (8000) Progress Report for October 1971*, ORNL-TM-3627, Oak Ridge National Laboratory.

## PAPERS PRESENTED

J. Lange, J. H. Hamilton, P. E. Little, D. Hattox, C. Morton, L. C. Whitlock, and J. J. Pinajian, "Decay of $^{68}$Ga and Multipole Admixtures in $^{68}$Zn," presented at *Tucson Meeting of The American Physical Society, November 4-6, 1971*.

A. C. Rester, B. van Nooijen, P. Spilling, J. Konijn, and J. J. Pinajian, "The Structure of $^{84}$Sr," presented at the *International Colloquim on Intermediate Nuclei*, Orsay, France.

N. C. Singhal, J. H. Hamilton, A. V. Ramayya, and J. J. Pinajian, "Inventigation of the Energy Levels in $^{132}$Xe Populated in the Decay of $^{132}$I," presented at *Columbia Meeting of the American Physical Society, November 4-6, 1971*.

## INTERNAL DISTRIBUTION

1. M. A. Baker
2. P. S. Baker
3. E. E. Beauchamp
4. G. E. Boyd
5-7. T. A. Butler
8. F. N. Case
9. W. R. Casto
10. J. A. Cox
11. F. L. Culler
12. W. C. Davis
13. J. S. Drury
14. J. H. Gillette
15. H. R. Gwinn
16. R. F. Hibbs
17. K. E. Jamison
18. Lynda Kern
19. E. H. Kobisk
20. E. Lamb
21. R. E. Leuze
22. J. L. Liverman
23. L. O. Love
24. W. S. Lyon
25. R. E. McHenry
26. H. H. Nichol
27. W. W. Parkinson
28. J. J. Pinajian
29. M. E. Ramsey
30. S. A. Reynolds
31-32. R. A. Robinson
33. D. A. Ross
34. A. F. Rupp
35. R. W. Schaich
36. A. H. Snell
37. K. A. Spainhour
38. M. R. Skidmore
39-40. H. F. Stringfield
41. D. B. Trauger
42. A. M. Weinberg
43. J. C. White
44-45. Central Research Library
46. Document Reference Section
47-51. Laboratory Records Department
52. Laboratory Records - RC

## EXTERNAL DISTRIBUTION

53. G. A. Andrews, ORAU, Medical Division, Oak Ridge, Tennessee
54. Hal Atkins, Brookhaven National Laboratory, Upton, New York
55. D. S. Ballantine, AEC, Washington, D. C.
56-59. R. F. Barker, AEC, Washington, D. C.
60. N. F. Barr, AEC, Washington, D. C.
61. O. M. Bizzell, AEC, Washington, D. C.
62. C. R. Buchanan, AEC, Washington, D. C.
63. R. L. Butenhoff, AEC, Washington, D. C.
64. T. D. Chikalla, PNL, Richland, Washington
65. D. F. Cope, AEC Site Representative, ORNL
66. J. C. Dempsey, AEC, Washington, D. C.
67. W. K. Eister, AEC, Washington, D. C.
68. E. E. Fowler, AEC, Washington, D. C.
69. J. D. Goldstein, AEC, Washington, D. C.
70. A. Gottschalk, Argonne Cancer Research Hospital, Chicago, Illinois
71. F. D. Haines, AEC, Washington, D. C.
72-74. J. E. Hansen, PNL, Richland, Washington
75. W. D. Holloman, AEC, Washington, D. C.
76. J. W. Irvine, MIT (Consultant)
77. J. Lawrence, Lawrence Radiation Laboratory, Berkeley, California
78. J. E. Machurek, AEC, Washington, D. C.
79. J. N. Maddox, AEC, Washington, D. C.
80. J. C. Malaro, AEC, Washington, D. C.
81. W. E. Mott, AEC, Washington, D. C.
82. J. A. Powers, AEC, Washington, D. C.

83. G. J. Rotariu, AEC, Washington, D. C.
84. B. A. Ryan, AEC, Richland, Washington
85. W. D. Sandberg, AEC, Aiken, South Carolina
86. R. W. Shivers, AEC, Washington, D. C.
87. F. J. Skozen (Krizek), Argonne Cancer Research Hospital, Chicago
88. R. E. Smith, ARHCO, Richland, Washington
89. L. G. Stang, Jr., BNL, New York
90-95. D. H. Turno, SRL, Aiken, South Carolina
96. A. R. Van Dyken, AEC, Washington, D. C.
97. Laboratory and University Division
98-99. Division of Technical Information Extension