LOCKHEED MARTIN ENERGY RESEARCH LIBRARIES
3 4456 0514431 3

CENTRAL RESEARCH LIBRARY
DOCUMENT COLLECTION

OAK RIDGE NATIONAL LABORATORY
operated by
UNION CARBIDE CORPORATION • NUCLEAR DIVISION
for the
U. S. ATOMIC ENERGY COMMISSION

ORNL-TM-3526
cy. 46

DISTRIBUTION LIMITED TO
AEC AND AEC CONTRACTORS

RADIOISOTOPE PROGRAM (8000) PROGRESS REPORT FOR JULY 1971

A. F. Rupp

OAK RIDGE NATIONAL LABORATORY
CENTRAL RESEARCH LIBRARY
DOCUMENT COLLECTION
LIBRARY LOAN COPY
DO NOT TRANSFER TO ANOTHER PERSON
If you wish someone else to see this document, send in name with document and the library will arrange a loan.
UCN-7969
(3 3-67)

NOTICE This document contains information of a preliminary nature and was prepared primarily for internal use at the Oak Ridge National Laboratory. It is subject to revision or correction and therefore does not represent a final report.

This report was prepared as an account of work sponsored by the United States Government. Neither the United States nor the United States Atomic Energy Commission, nor any of their employees, nor any of their contractors, subcontractors, or their employees, makes any warranty, express or implied, or assumes any legal liability or responsibility for the accuracy, completeness or usefulness of any information, apparatus, product or process disclosed, or represents that its use would not infringe privately owned rights.

ORNL-TM-3526

Contract No. W-7405-eng-26

Isotopes Development Center

RADIOISOTOPE PROGRAM (8000) PROGRESS REPORT FOR JULY 1971

A. F. Rupp

Work Sponsored by
AEC Division of Isotopes Development

AUGUST 1971

OAK RIDGE NATIONAL LABORATORY
Oak Ridge, Tennessee
operated by
UNION CARBIDE CORPORATION
for the
U.S. ATOMIC ENERGY COMMISSION

LOCKHEED MARTIN ENERGY RESEARCH LIBRARIES

3 4456 0514431 3

CONTENTS

Page

RADIOISOTOPE PRODUCTION AND MATERIALS DEVELOPMENT 1

REACTOR-PRODUCED ISOTOPES 1

A. Biomedical Radioisotopes 1

1. Phosphorus-33 1

B. Isotopic Power 2

1. Thulium-170 2

C. Reactor Products Pilot Production 3

D. Miscellaneous 3

1. HFIR Target Testing 3

ACCELERATOR-PRODUCED ISOTOPES 3

A. Biomedical Radioisotopes 3

1. Gallium-67 3
2. Indium-111 4
3. Barium-133m 5
4. Silicon-32 6

B. Accelerator Pilot Production 6

FISSION PRODUCTS 7

A. Krypton-85 Enrichment 7

B. Cesium-137 Gamma Source Development 8

1. Alternative Cesium-137 Source Form Development 8
2. Assessment of Cesium Vanadates as Cesium-137 Gamma Sources 9
3. Mixed Oxides of Types $Cs_2O \cdot Al_2O_3 \cdot nSiO_2$ and $Cs_2O \cdot MgO \cdot nSiO_2$ 10

C. Cesium-137 Pilot Production 11

1. Processing and Process Status 11
2. Operational Summary 12
3. Current Orders 12
4. Source Fabrication 12

Page

D. Strontium-90 Pilot Production 12

1. Processing and Process Status 12
2. Operational Summary 13
3. Current Orders 13
4. Source Fabrication 13

E. Strontium Pellet Vacuum Hot Press 13

F. Short-Lived Fission Products Pilot Production 15

SOURCE DEVELOPMENT 15

A. Radiation Source Development 15

1. Cadmium-109 Source 15

B. Radiation Processing 16

1. Radiolytic Oxidation of Dye Waste Solution 16
2. Radiolytic Oxidation of Dye Waste Solutions with a Dynamic System 20

C. Radioisotope Characterization, Quality Control, and Standards 21

1. Radioisotope Characterization 21
2. Radioisotope Special Analysis and Quality Control . . . 21

D. Radioisotope Safety 22

1. Tritium Foils 22

TECHNOLOGY UTILIZATION 25

A. Information Center 25

B. Isotopes and Radiation Technology 25

C. Publications 25

RADIOISOTOPE SALES 26

ADMINISTRATIVE 26

PUBLICATIONS 27

JOURNALS 27

REPORTS 27

RADIOISOTOPE PROGRAM (8000) PROGRESS REPORT FOR JULY 1971

A. F. Rupp

RADIOISOTOPE PRODUCTION AND MATERIALS DEVELOPMENT

REACTOR-PRODUCED ISOTOPES - 08-01-01

A. Biomedical Radioisotopes

1. Phosphorus-33

The purpose of this project is to develop methods of preparing hundred-millicurie quantities of carrier-free phosphorus-33 containing $\leq 5\%$ phosphorus-32. The two methods of producing phosphorus-33 being evaluated are based on the irradiation of highly enriched targets of sulfur-33 (>92 at. %) or chlorine-36 (approximately 63 at. %) in a fast neutron flux. Phosphorus-33 (25.2 days; 0.248-MeV β^-_{max}) has both a longer half-life and a lower energy beta than phosphorus-32 (14.3 days; 1.709-MeV β^-_{max}), which makes it advantageous for autoradiography, longer ecological and agricultural experiments than with phosphorus-32, synthesis of tagged complex organo-phosphorus compounds, and double labeling experiments.

The phosphorus-33 product reported last month was confirmed to have a 14% phosphorus-32 content at end of processing. The phosphorus-33 yield was also lower than anticipated. Another target, which was a fraction of the same original $K^{36}Cl$ target material, also contained 13% phosphorus-32 and provided a low yield when processed. The similar results indicate that the target material was not pure. Spark-source mass spectrometry indicated a high calcium and sulfur contamination. The amount of sulfur present was sufficient to account for the phosphorus-32 via the $^{32}S(n,p)^{32}P$ reaction. The assumption of a sulfate salt and the presence of a substantial amount of calcium in the target provide a reasonable explanation for the reduced phosphorus-33 yield.

The original target material was recovered during a phase of personnel changes, and it seems reasonable to conclude from notebook records that a step in the target recovery procedure was omitted, namely, the precipitation of sulfate by addition of $Ba(OH)_2$. The sulfate is introduced into the target dissolver solution as $Fe_2(SO_4)_3$ for the purpose of precipitating iron hydroxide as a phosphate carrier. Calcium probably originated from a malfunction of the still supplying distilled water. Under ordinary procedures this would present no problem, as $CaSO_4$ would precipitate with $BaSO_4$.

The targets were combined and $Ba(OH)_2$ was added to completion of precipitation. The excess barium and any calcium remaining will be removed by passing the target solution through a cation column loaded with potassium.

B. Isotopic Power

1. Thulium-170

The objectives of this research are to provide sufficient data on thulium-170 to permit assessment of its potential application as an isotopic power source for short-duration missions.

Determination of partial and total pressures of various vapor species above solid Tm_2O_3 using the small Knudsen cell is now complete at 1990°C. The result summarized in Table 1 has been corrected for various factors. It should be noted that the value of "apparent" vapor pressure of Tm_2O_3 at 1990°C (3.25×10^{-7} atm) based on the data from the small Knudsen cell is approximately 36% higher than the value from the large Knudsen cell (2.38×10^{-7} atm), but it agrees closely with the theoretically calculated value (3.24×10^{-7} atm).

Table 1. Rates of Effusion, and Partial and Total Pressures of Various Vapor Species Above Solid Tm_2O_3 in Small Knudsen Cell at 1990°C

Vapor Species	Rate of Effusion[b] ($g/cm^2.min$) x 10^5	Partial Pressure[c] (atm) x 10^7
TmO	10.67	1.42
Tm	7.97	1.11
O	1.59	0.72
Total	20.23	3.25[a]

[a]"Apparent" vapor pressure of Tm_2O_3.
[b]Corrected for the weight change of the empty Knudsen cell as well as for the thermal expansion of the orifice.
[c]Corrected for the Clausing factor (a transmission probability).

Several experimental runs with Yb_2O_3 have been made at 1990°C using the small Knudsen cell; however, the orifice became plugged with Yb_2O_3 crystals after three 48-hr runs, and the experiment with the small cell had to be discontinued. This type of problem, which has never been encountered with Tm_2O_3, presumably indicates a much higher rate of effusion of Yb_2O_3 at this temperature than that of Tm_2O_3. The same experiment was resumed with the large Knudsen cell, but steady-state condition has not yet been reached. According to calculations from the preliminary result, the "apparent" vapor pressure of Yb_2O_3 at 1990°C will probably be more than four times that of Tm_2O_3 at the same temperature.

C. Reactor Products Pilot Production (Production and Inventory Accounts)

Processed Units		Service Irradiations	
Radioisotope	Amount (mCi)	Type	Number
Iodine-130	181	Tellurium-122	1
Copper-67	11		
Calcium-47	7		
Palladium-109	1,125		
Rhenium-186	410		

D. Miscellaneous

1. HFIR Target Testing

Thirteen hydraulic tube rabbits were tested this month with one reject.

ACCELERATOR-PRODUCED ISOTOPES - 08-01-02

A. Biomedical Radioisotopes

1. Gallium-67

The objectives of this program are to determine the optimal target configuration for gallium-67 (78.2 hr) production by the $^{68}Zn(p,2n)^{67}Ga$ reaction in acceptable purity and quantity and to provide gallium-67 for clinical applications research and development. Interest in this isotope has been spurred by evidence, obtained by the Medical Division of Oak Ridge Associated Universities (ORAU), of a high uptake of carrier-free gallium-67 by lymphoid tumors in both animals and humans.

Gallium-67 decays by electron capture with the emission of four main gamma rays of 93, 185, 300, and 394 keV with intensities of 42, 24, 17, and 5%, respectively.

Weekly production of gallium-67 was suspended for two weeks early in this reporting period due to reduced customer demand caused by widespread attendance within the nuclear medical community at the 18th Annual Meeting of the Society of Nuclear Medicine. Weekly production has been resumed with two preparations being shipped. Two weekly shipments of 100-mCi batches of gallium-67 citrate were supplied to ORAU during this period as part of the Cooperative Group to Study Localization of Radiopharmaceuticals project. All products supplied so far as part of this project have been tested by ORAU and found to be pyrogen-free as required.

The problem of semiquantitative gallium-67 recovery from the raw product evaporation beaker[1] has been investigated further. Teflon-coated glass

[1]A. F. Rupp, *Radioisotope Program (8000) Progress Report for May 1971*, ORNL-TM-3461, p. 4, Oak Ridge National Laboratory.

beakers were tested but found unsatisfactory due to (1) the apparent leaching of organic impurities from the Teflon surface during evaporation of the HCl solution, and (2) the slower rate of evaporation, i.e., at constant hot plate settings it took about twice as long to evaporate an equal volume of acid from a Teflon-coated glass beaker as from a similar glass beaker. Higher evaporation temperatures cannot be used without appreciable sublimation losses of the carrier-free gallium-67 product. As a result of these tests, Vycor beakers which have been prewashed with distilled water and then heated to 150-180°C for 1-2 hr have been selected as the containers of choice for the raw product evaporation. Production experience using this procedure indicates that a single Vycor beaker can be used for approximately eight preparations before surface adsorption of gallium-67 increases to $\geq 7\%$, at which point it is discarded and a new Vycor beaker placed in service.

A series of experiments was undertaken to develop a method for preparing a 0.003-0.005-in.-thick zinc-on-copper electroplate suitable for the preparation of enriched zinc-68 targets. Numerous articles have appeared in the literature describing the electrodeposition of zinc from a myriad of electrolyte systems, e.g., sulfate, chloride, acetate, fluoborate, alkaline zincates and double cyanides; but in all applications when a thick plate was desired, i.e., 0.001-0.005 in., a zinc anode was employed to maintain a constant zinc ion concentration in the electrolyte. The use of enriched zinc-68 precludes the use of such an anode.

A preliminary group of experiments was run to evaluate different plating solutions using fixed, but not optimal, conditions. A plating cell was developed which had a volume of approximately 15 ml and a cathode area of 5 cm^2. In all experiments a copper substrate which had been degreased and treated in a dilute HCl bath was used. Test runs were made with sulfate, chloride, alkaline zincate, and fluoborate solutions. The zincate electrolyte was unable to dissolve enough zinc to prepare the desired thickness target and could not be used without a zinc anode. The fluoborate solution worked well until the zinc concentration became appreciably depleted at which time the electrolyte solution appeared to start attacking the cathode. Additional experiments indicated that either the sulfate or chloride electrolyte systems offered more promise for further development.

2. Indium-111

The objectives of this program have been to define and optimize the pertinent production parameters for the economical production of indium-111 of satisfactory quality for radiopharmaceutical manufacture. The current objectives are to obtain practical operating experience of the procedures developed by pilot production and to provide this radionuclide to interested customers as a special research material — in batch lots — for their evaluation. Indium-111 has been suggested for such studies as spinal-cerebral cisternography, aerosol lung studies, delayed brain scanning, visualization of the lymphatic system, metabolic studies of indium-labeled

macroaggregates and colloids, and tumor localization. Indium-111 has gamma emissions of 173 keV (89%) and 247 keV (94%) ideally suited for external detection and an optimal half-life (2.81 days) for labeling and distribution studies which must be carried out over 24 hr or longer.

No indium-111 was produced during June due to cyclotron operating difficulties. One batch of indium-111, approximately 113 mCi total at the end of the 1-day decay allowance, was prepared in July and portions were supplied to interested clinicians as a special research material at full-cost recovery.

3. Barium-133m

The medium to heavy alkaline earths (i.e., Ca, Sr, and Ba) have been used extensively as bone-scanning agents. Due to the high toxicity of barium, the preparation of a low-dose, carrier-free barium isotope, e.g., barium-133m (38.9 hr) produced by the $^{133}Cs(p,n)^{133m}Ba$ nuclear reaction, has been initiated as a possible alternative to lower specific activity, neutron-produced barium-135m (28.7 hr). Barium-133m has a single prominent gamma ray of suitable energy (276 keV) and intensity (17%) for scanning. Even though this isotope decays to radioactive barium-133 (10.7 year), the relatively short biological half-life of barium, about 65 days (total body) versus about 13,000 days for strontium and 17,000 days for calcium, reduces the dose from this long-lived daughter appreciably.

Two developmental irradiations have been performed on this project: one being retained for study and characterization, and the other being supplied to cooperative participants at Yale and Johns Hopkins Universities for evaluation. A thick-target production rate of approximately 350 mCi/mA-hr and an end-of-bombardment product radionuclidic purity of $\geq 99.9\%$ barium-133m and $\leq 0.1\%$ barium-133 were measured for a CsCl target encapsulated in an aluminum capsule assembly and irradiated for 30 min with approximately 21-MeV protons (proton energy at target material approximately 15-16 MeV). Attempts to use this target configuration for a 2-hr irradiation resulted in premature target failure, presumably due to the approximately 15% volume expansion in CsCl at 469°C resulting from a change in crystal structure. Additional target development will be undertaken using Cs_2SO_4 (melting point = 1010°C) as a target material in an attempt to improve the target reliability.

The barium-133m product is separated and purified by cation exchange chromatography. A dilute HCl (≤ 0.1 *M*) dissolver solution is passed through a small cation column (H^+ form); whereupon the bivalent barium ions band tightly at the top ($K_d > 10^4$) and the monovalent cesium ions displace the hydrogen ions ($K_d \simeq 180$) to saturate the column and then pass through unadsorbed. Washing the column with approximately 50-75 column volumes of 0.8 *M* HCl removes the remainder of the cesium ions and any cobalt impurities that might have been leached from the irradiation capsule. Strontium impurities, arising from rubidium impurities

in the cesium target material, can be removed by additional washing with 0.8 *M* HCl before the elution of barium with stronger acid. The barium-133m product is eluted with <10 column volumes of 4 *M* HCl. The eluate is evaporated to dryness, taken up in dilute (0.05 *M*) HCl and micropore filtered before shipment. Future separations work will be devoted to determining the operating parameters and separation factors of this separation scheme more precisely. Product purity and characterization will also be investigated.

4. Silicon-32

The formation paths for reactor production of silicon-32 depend upon the production of and subsequent neutron reaction of an intermediate. Silicon-32 exhibits many desirable physical decay characteristics that make it an interesting and attractive radionuclide for a variety of uses: (1) the only long-lived radionuclide of silicon for use in agriculture, geology, solid-state physics, etc., (2) as a parent for a ^{32}Si-^{32}P generator system which would offer a constant supply of phosphorus-32 for medical and scientific application, and (3) as a long-lived Cerenkov counting standard for phosphorus-32 determinations.

Three target assemblies for irradiation in the removable beryllium reflector region of the HFIR were fabricated, tested, and accepted for multicycle irradiation. Two of these targets contained approximately 730 mg each of $AlPO_4$ (approximately 171 mg phosphorus) for production of silicon-32 via the $^{32}P(n,\gamma)^{33}P(n,p)^{32}Si$ nuclear reaction path. It has been estimated that each of these targets should yield about 0.6 μCi of silicon-32 at the end of a six-cycle (i.e., 138 d) irradiation. The third target, which contains 1.34 g of enriched $K_2{}^{34}SO_4$ (33.49 at. % sulfur-34), will be used for an exploratory investigation of silicon-32 production via the $^{34}S(n,\gamma)^{35}S(n,\alpha)^{32}Si$ nuclear reaction path. One of the $AlPO_4$ targets and the $K_2{}^{34}SO_4$ target have been inserted into the reactor and are currently undergoing irradiation. The second $AlPO_4$ target will be inserted at a later date as more HFIR space becomes available. The $AlPO_4$ hydraulic tube target irradiated earlier[2] will be used for process development while this second series of targets is being irradiated.

B. Accelerator Pilot Production (Production and Inventory Accounts)

Table 2 gives the July 1971 accelerator runs for ORNL and non-ORNL programs.

---

[2]A. F. Rupp, *Radioisotope Program (8000) Progress Report for December 1970*, ORNL-TM-3282, p. 4, Oak Ridge National Laboratory.

Table 2. Accelerator Irradiations and Runs for July 1971

Product	No. of Runs	Time (hr:min) Beam	Misc.	Total	Total Charges
		ORNL Programs			
Gallium-67	2	8:30	2:25	10:55	$ 1,127
Indium-111	1	2:00	1:15	3:15	340
Cobalt-61	7	18:00	11:10	29:10	2,850
		28:30	14:50	43:20	$ 4,318
		Non-ORNL Programs			
Rubidium-84	2	11:35	2:55	14:30	$ 3,503
Cobalt-57	1	50:00	1:15	51:15	8,495
Rhodium-99	1	4:00	1:15	5:15	795
Radiation Damage	1	25:20	1:00	26:20	3,712
		90:55	6:25	97:20	$16,505

FISSION PRODUCTS - 08-01-03

A. Krypton-85 Enrichment

Units A and B (see Fig. 1) were loaded with normal feed krypton, but not enough was on hand to fill the units to optimum pressure. A new supply of feed gas will be brought in and enough gas added to these units to bring the hot pressure up to 2 psig, the normal operating pressure. Two liters of depleted ends was removed from unit CD and was replaced with two liters of partially enriched material of 11% krypton-85 concentration. Unit AB has not yet been loaded and units C, CD, and D are operating normally.

A check valve in one of the chemical pumps used in the cooling water treatment system failed, so new valves were obtained and both pumps were rebuilt, with no shutdown time on the thermal diffusion units.

Unit	Activity in Unit (Ci)	Time Since Last Product Removal (days)	Count Rate in Product Section (counts/min) June 1971	July 1971
A	120	10	0	2,250
B	120	10	0	2,300
C	1784	200	8,250	9,500
CD	2589	450	17,000	18,700
D	1647	200	8,050	9,200

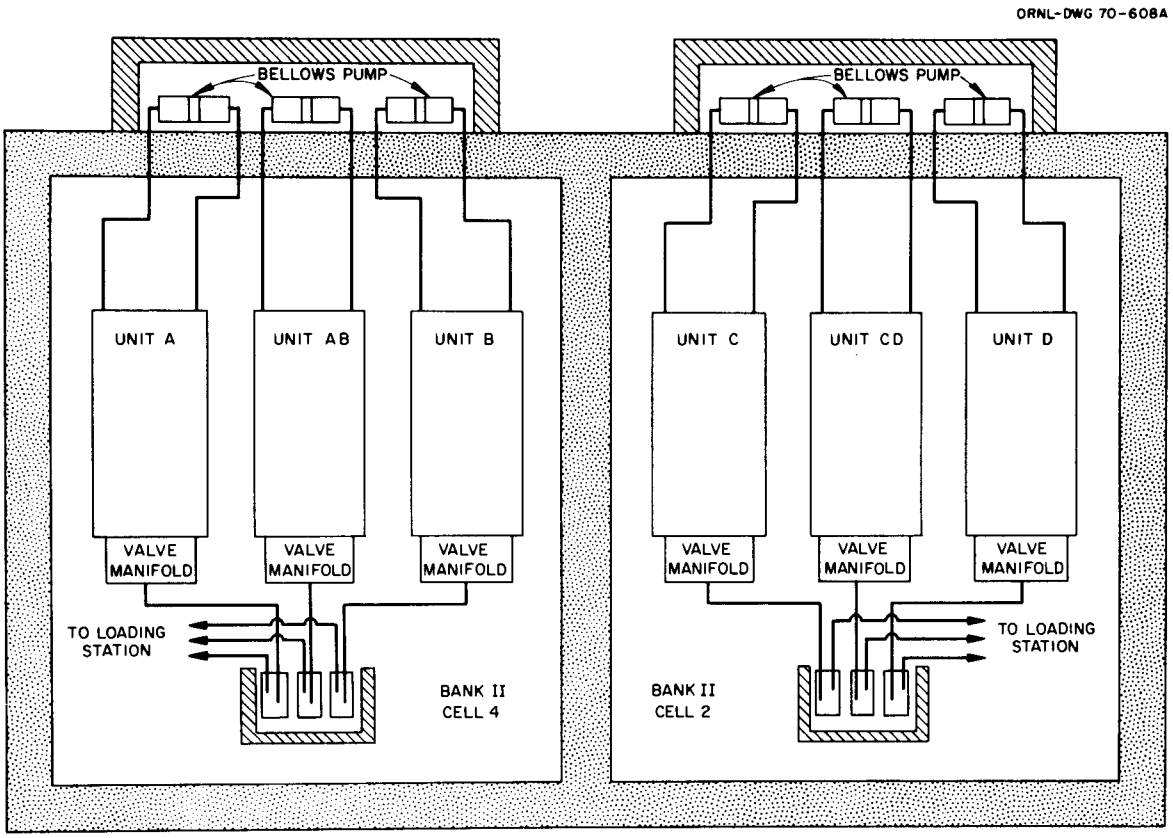

Fig. 1. Schematic Arrangement of Krypton-85 Columns.

B. Cesium-137 Gamma Source Development

Cesium-137 chloride has been the compound of choice for radiation sources in applications of moderate temperature conditions. In many respects cesium chloride is the ideal compound; the cesium weight per unit volume is high, the radiation resistance of the CsCl is excellent, the compatibility with stainless steel at ambient temperatures is excellent, and its preparation is straightforward. However, the projected conditions of use of cesium-137 gamma sources are increasingly severe with respect to temperature, and some applications indicate the need for a cesium source material which has low solubility. In view of these projected conditions of use, the testing of $^{137}CsCl$ at elevated temperatures is being done and the development of a low solubility, temperature resistant source form of cesium is being studied.

1. Alternative Cesium-137 Source Form Development

a. Characteristics of Cesium Vanadates

The chemical analysis for cesium vanadates prepared by the Cs_2CO_3-V_2O_5 slurry reaction is now available. The atomic ratios V/Cs computed from

the chemical analysis are listed in Table 3 for selected samples. (The V/Cs ratio for the original reaction mixture was 1.10.) Table 3 also shows the stability of compounds in aqueous solution (as wt % insolubles) and the estimated values of volumetric specific activity as related to the conditions of preparation.

Table 3. Characteristics of Cesium Vanadate Products

Sample No.[a]	Calcining or Drying Temperature (°C)	Atomic V/Cs Ratio[b]	Wt % of Insolubles		Estimated Volumetric Spec. Act.[c] (Ci/cm^3)
			Sea Water	Distilled Water	
JY-1	∿235	1.14	-	-	75
JY-2	750	1.19	30.7	30.0	74
JY-3	∿225	0.94	24.4	40.5	81
JY-4	750	0.88	5.5	3.6	83

[a]Slurry reaction was carried out with a reflux condenser for JY-1 and JY-2, but without it for JY-3 and JY-4.
[b]The V/Cs ratio for the original reaction mixture was 1.10.
[c]Assume 0% porosity and an isotopic purity of 36.5% cesium-137. The volumetric specific activity of $^{137}CsCl$ gamma source is approximately 100 Ci/cm^3.

According to Table 3, a short slurry reaction time results in a highly soluble product upon calcination (compare sample JY-2 with JY-4). Most of the insolubles in distilled water (40.5 wt %) for JY-3 can probably be accounted for by the unreacted V_2O_5 which is only slightly soluble (approximately 0.007 g/liter) in water but is more soluble in an alkaline solution (e.g., sea water). The original reaction mixture contained approximately 40 wt % of V_2O_5. The fact that the V/Cs ratio dropped appreciably from 1.1 (original reaction mixture) to 0.94 for JY-3 and to 0.88 for JY-4 presumably implies preferential losses of vanadium compounds through decomposition and/or volatilization. Such losses probably occurred in the drying step to approximately 225°C (not determined). The relatively good thermal stability of the cesium vanadate products with a longer slurry reaction time (with reflux condenser) can be seen in the slight upward shift of the V/Cs ratio for JY-1 and JY-2.

2. Assessment of Cesium Vanadates as Cesium-137 Gamma Sources

The volumetric specific activity of gamma sources of cesium vanadates (e.g., JY-2) is estimated to be about the same (approximately 70 Ci/cm^3, see Table 3) as those of cesium tantalates and cesium niobates of equivalent stoichiometries. Being compounds containing a lighter element, vanadium, cesium vanadates have an advantage over cesium tantalates and niobates in that the mass absorption coefficient for the gamma radiation would be appreciably smaller. However, the low thermal stability (melting points

are probably 700°C or lower) and the relatively high solubility (approximately 70% solubles) of cesium vanadates in an aqueous solution may make them less desirable than either niobates or tantalates as a gamma source. In fact, cesium vanadates do not appear to have any overall advantage over the CsCl gamma source.

3. Mixed Oxides of Types $Cs_2O \cdot Al_2O_3 \cdot nSiO_2$ and $Cs_2O \cdot MgO \cdot nSiO_2$

Studies are in progress on the ceramic compounds of cesium, such as $Cs_2O \cdot Al_2O_3 \cdot nSiO_2$ and $Cs_2O \cdot MgO \cdot nSiO_2$. Compounds of this type are expected to possess high degrees of thermal stability and chemical inertness. Table 4 shows the values of volumetric specific activity for such compounds calculated from the estimated densities and isotopic purity.

Table 4. Estimated Values of Volumetric Specific Activity for Ceramic-Type Compounds of Cesium

Value of n	$Cs_2O \cdot Al_2O_3 \cdot nSiO_2$		$Cs_2O \cdot MgO \cdot nSiO_2$	
	Wt % of Cs	Est. Vol. Spec. Activity[a] (Ci/g)	Wt % of Cs	Est. Vol. Spec. Activity[a] (Ci/g)
1	62.58	60	70.59	66
2	55.12	53	61.00	57
3	49.25	47	53.70	50
4	44.51	43	47.96	45

[a]Assume 0% porosity and an isotopic purity of 36.5% cesium-137.

It is seen from Table 4 that the compounds containing MgO would have somewhat higher activity than those containing Al_2O_3. In any case, the specific activity of this type of compound is favored by the small n values. Preparation of such compounds generally requires a high temperature solid-phase reaction and/or a hydrothermal reaction at high pressure for as long as 20 days. The goal of the present study is to develop a process that does not require a high pressure vessel and can produce the compound in a short time with minimum of cesium losses.

One of the possible methods of approach is to carry out a stagewise reaction by first forming a relatively reactive compound from two of the three oxide constituents, which, in turn, is reacted with the third oxide to produce the desired compound. For example, the water glass ($Na_2O \cdot xSiO_2$)-like compounds could be prepared from Cs_2CO_3 and SiO_2. The compound $Cs_2O \cdot xSiO_2$ is expected to be soluble in water and would probably react with either Al_2O_3 or MgO readily. The experimental investigation of this method is in progress. The conditions to be used (temperature, time, etc.) in various stages of reaction are being determined by observation of the behavior of the reaction mixture under the optical microscope equipped with a high temperature stage (1350°C maximum).

C. Cesium-137 Pilot Production (Production and Inventory Accounts)

1. Processing and Process Status

Eight batches of cesium-137 feed, representing approximately 40% of the cesium-137 received in the HAPO-IC-1 cask, were processed through the cesium-137 accumulation cycle. This was combined with the cesium-137 in the system from previous recovery operations. A standard cycle of purification (oxalate crystallization-oxalate recrystallization-calcination) was done, yielding an estimated 78,000 Ci of "cesium carbonate" to be converted to product during August. A summary of the operations on this representative cycle of cesium-137 to date is given below (the values, except for feed and waste, are estimated).

	Amount (Ci)
Cesium-137 Accumulation	
System inventory at startup	42,400
Feed processed	154,100
Waste discarded	300
System inventory after accumulation	196,200
Cesium-137 Purification	
Transferred from accumulation crystallizers	190,800
Remaining in accumulation crystallizers	5,400
Recycled filtrates from purification	43,100
Purified cesium-137 alum	147,700
Cesium-137 Oxalate Crystallization	
Recycled filtrate	42,400
Cesium-137 oxalate solution	105,300
Cesium-137 Oxalate Recrystallization	
Recycled filtrates (3)	26,400
Cesium-137 oxalate recovered	78,900
Waste discarded (powder handling)	900
Waste discarded (reprocessing oxalate filtrates)	100
Cesium-137 carbonate intermediate product	78,000

The oxalate cycle yield, from purified alum to carbonate, of 53% is typical of past runs. Since this was a startup cycle with a relatively low initial system inventory, later cycles would require less accumulation work to bring the system back to the nominal 200,000-Ci level for oxalate processing. The current cesium-137 process status is as follows:

Item	Cesium-137 (Ci)
In-process material	656,000
$^{137}CsCl$ product	16,800
Sources in fabrication	3,200
Completed sources awaiting shipment	46,500

2. Operational Summary

Item	July 1971 No.	July 1971 Amount (Ci)	FY 1972 No.	FY 1972 Amount (Ci)
HAPO shipments received	0	0	0	0
Product batches prepared	0	0	0	0
Sources fabricated	0	0	0	0
Special form containers loaded	0	0	0	0
Sources shipped	0	0	0	0
Special form containers shipped	0	0	0	0

3. Current Orders

Current orders for cesium-137 as sources or bulk powder are shown below:

Customer	Amount (Ci)	Estimated Shipping Date
J. L. Shephard and Associates	7,050	August 1971
Atomic Energy of Canada Limited	1,500	August 1971
Laboratorio de Delucion de Radio, Mexico	14	August 1971
Radiochemical Centre, England	500	August 1971
American Hoechst Corporation	5	August 1971
Lockheed Georgia Company[a]	~35,000	August 1971
Brookhaven National Laboratory	203,000	FY 1972
U. S. Atomic Energy Commission	10,001	FY 1972
Total	257,070	

[a]The cesium-137 activity to be supplied by Lockheed-Georgia Company.

An order is on hand from AECL for approximately 154,300 Ci as bulk powder to be scheduled and shipped as released by the customer.

4. Source Fabrication

A miscellaneous source campaign is now in progress. Twenty-five sources totaling approximately 10,000 Ci should be ready for shipment by August 1.

D. Strontium-90 Pilot Production (Production and Inventory Accounts)

1. Processing and Process Status

No strontium-90 processing was done this month. Equipment removal and decontamination of the pellet pressing cell continued. The current strontium-90 process status is as follows:

Item	Strontium-90 (Ci)
In-process material	960,000
Strontium-90 products	439,500
Sources in fabrication	0
Returned SNAP sources	291,000
Completed sources awaiting shipment	64,600

2. Operational Summary

Item	July 1971		FY 1972	
	No.	Amount (Ci)	No.	Amount (Ci)
HAPO shipments received	0	0	0	0
Product batches prepared	0	0	0	0
Sources completed	0	0	0	0
Special form containers loaded	0	0	0	0
Shipments to customers	12	45,900	12	45,900

3. Current Orders

Current orders for strontium-90 as sources or bulk powder are as follows:

Customer	Amount (Ci)	Estimated Shipping Date
U. S. Navy	411,380	a
U. S. Navy	208,000	a
Total	619,380	

[a]Further work and subsequent shipment are pending receipt of instructions from customer.

4. Source Fabrication

Leak testing of the Sentinel-25 sources for Teledyne and the loading of the sources into generators were completed. Shipment of these sources was made on June 25, 1971.

Six sources, each containing approximately 8,000 Ci, were shipped to Gulf Energy and Environmental Systems during July. These sources were fabricated and reported during May, but shipment was delayed due to licensing difficulties.

E. Strontium Pellet Vacuum Hot Press

Four pellets were pressed during July. Two (15, 16) were to examine the pressing characteristics of Sr_2TiO_4 and two (17, 18) were to

determine the feasibility of pressing a pellet with a protective nickel cladding. A discussion of the pellets follows:

Pellet 15 - This pellet was pressed using powder made from combining strontium nitrate and ammonium titanyl oxalate to form Sr_2TiO_4 (80% as determined by x-ray analysis). Previous work on a small scale indicated that optimum density was reached at a die body temperature in excess of 1450°C.

The pellet was pressed at a temperature of 1470°C using a graphite liner to prevent any reaction with the TZM die body. The pellet had a density of 4.3 g/cm^3 and a pH of approximately 10.

The Viton O-ring that seals the TZM transmitter rod to the upper bellows flange failed during the run, necessitating the use of ram pressure (2000 psi) during the cool-down cycle to prevent an in-leakage of air. As found in the past when ram pressure was applied during cool-down, the pellet was extensively cracked.

Pellet 16 - This pellet was pressed (from the same Sr_2TiO_4 batch as pellet 15) at a lower temperature (1320°C) to determine the effect on density. The physical appearance of the pellet was similar to 15, but the top of the pellet bonded with the graphite punch. A density measurement on the bottom portion of the pellet yielded a value of 4.4 g/cm^3.

A more thorough study of the pressing characteristics of this material is planned as soon as another batch can be made (the ammonium titanyl oxalate is on order). The material on order has less impurities than that previously used.

Pellet 17 - This pellet was pressed with the powder contained in a porous nickel jacket with end caps to determine the feasibility of enclosing a pressed pellet in a protective sheath. This is of particular interest with materials such as SrO which react with the moisture in the air. The nickel jacket was contained inside a graphite liner which protected the TZM from the nickel. The punches were sized to fit inside the graphite liner.

The pellet was pressed at 1400°C (die body temperature measured with an optical pyrometer). During the pressing the top half of the nickel liner extruded out the top of the die body and flowed down the outside. The nickel severely pitted the inner surface of the TZM die body where the nickel flowed through cracks in the graphite inner liner. The bottom half of the pellet had a good seal between the end cap and the side wall.

Pellet 18 - This pellet was pressed with a nickel jacket in the same manner as pellet 17 except at a lower temperature (1340°C) to determine if the lower temperature would eliminate the extrusion problems found in pellet 17.

There was a small amount of nickel (much less than pellet 17) extruded even at this temperature. The nickel side wall formed around the pellet in a satisfactory manner but both end caps bonded with the graphite

punches. The bottom end cap failed to fuse with the nickel side wall. This failure to fuse is at least partly accountable by the temperature difference observed between the upper and lower portions of the pellets. The lower portion of the die body has a more conductive path through the die rest to the water-cooled baseplate. Two means of immediately reducing this temperature difference are: 1) use of a longer bottom punch and 2) a modification of the die rest to reduce the area of heat transfer. These methods will be applied during the next report period.

F. Short-Lived Fission Products Pilot Production (Production and Inventory Accounts)

Isotope	Number of Batches	Amount (Ci)
Neodymium-147	1	2
Xenon-133	2	600
Iodine-131	1	37
Ruthenium-106	1	75
		714

SOURCE DEVELOPMENT - 08-01-04

A. Radiation Source Development

1. Cadmium-109 Source

Cadmium-109 decays with a 1.3-year half-life by K capture to produce a 22-keV silver x ray. An 88-keV gamma photon is also produced in its decay with an intensity of 3.9%.

A highly collimated source containing approximately 100 mCi was requested by the U. S. Naval Research Laboratory to be used for the determination of mercury in air samples. The 22-keV x ray will be used to fluoresce the L x rays of lead.

The source capsule which has been designed for this source is 1/8 in. in diameter and 1/2 in. long. The window at the end of the capsule is 0.005-in. thick to allow the low-energy silver x ray to emerge. A small 0.040-in. silver reflector placed in the source capsule will backscatter a portion of the low-energy x rays and also absorb a fraction of the higher energy photons to produce silver x rays.

A source is presently being prepared which will contain 10 mCi of cadmium-109. The cadmium-109 was produced in the HFIR from an enriched target of cadmium-108. This source will be loaned to the Naval Research Laboratory until the 100-mCi source is available.

B. Radiation Processing (Not Supported by 08 Program; WFO Account)

Pollution of rivers by dye waste effluent from textile mills and dye chemical manufacturers is a serious problem. Past experimental work has shown that radiolytic oxidation of the waste solutions may be a practical method of destroying certain dyes and chemicals. The purpose of this investigation is to study and develop a method of radiolytic oxidation. The method developed must be economically feasible. A cobalt-60 gamma radiation source is being used to irradiate samples under a high pressure oxygen atmosphere. The solutions include both individual dyes and mixtures of dyes. This work is being supported by the American Association of Textile Chemists and Colorists (AATCC) and the Environmental Protection Agency.

1. Radiolytic Oxidation of Dye Waste Solution

a. Intracolor Intralite Fast Brilliant Blue 2GLL Dye Solution

The radiolytic oxidation of Intracolor Intralite Fast Brilliant Blue 2GLL dye solution was investigated and reported earlier.[3] Samples of unirradiated and irradiated solutions were filtered through a 0.80-μm Millipore membrane, and the absorbances at 480, 580, and 680 mμ were measured. The color units of the sample were calculated by adding the absorbance values and then multiplying by the solution dilution factor. Equation (1) was used to calculate the percent color reduction of the sample due to the treatment of the sample.

$$\frac{A - B}{A} \times 100\% = \%\ \text{color reduction} \qquad (1)$$

where A is color units of original and B is color units of treated sample. The results are shown in Table 5. The radiolytic oxidation is effective in reducing the color and COD of the dye samples.

Table 5. Color Reduction of Filtered Intracolor Intralite Fast Brilliant Blue 2GLL Samples

Radiation Exposure (R)	Dilution Factor	Absorbances at 480 mμ	580 mμ	680 mμ	Color Units	% Color Reduction
None	4	0.13	0.61	0.21	3.80	0
10^6	1	0.04	0.13	0.05	0.21	94.4
5×10^6	1	0	0	0	0.0	100

[3] A. F. Rupp, *Radioisotope Program (8000) Progress Report for April 1971*, ORNL-TM-3414, Oak Ridge National Laboratory.

b. Intracolor Intrazone Black 2BN Dye Solution

The radiolytic oxidation of Intracolor Intrazone Black 2BN (a disazo dye) solution was investigated and reported earlier.[3] Samples of unirradiated and irradiated solutions were filtered through a 0.80-μm Millipore filter, and the absorbances at 460, 560, and 660 mμ were measured. The color units and percent color reduction were calculated, and the results are shown in Table 6.

Table 6. Color Reduction of Intracolor Intrazone Black 2BN Dye Solution

Radiation Exposure (R)	Dilution Factor	Absorbances at 480 mμ	580 mμ	680 mμ	Color Units	% Color Reduction
None	3	0.128	0.268	0.098	1.47	0
10^6	1	0	0	0	0	100
5×10^6	1	0	0	0	0	100

c. ICI America Procion Brilliant Red H3BS Dye Solution

The radiolytic oxidation of ICI America Procion Brilliant Red H3BS (a fibre reactive dye) solution was investigated. This dye was furnished as a standard by arrangements with the American Association of Textile Chemists and Colorists. The solution contained 0.235 g lantex, 0.235 g dye, 0.118 g sodium bicarbonate, 0.423 g urea, and 0.047 g ludigol per gallon of water. Samples of this solution under 1500 psi oxygen were irradiated at doses of 10^6 and 5×10^6 R in the cobalt irradiator. The red color disappeared after the 10^6 R exposure. The results of this irradiation are shown in Table 7.

Table 7. Transmission and COD of ICI America Procion Brilliant Red H3BS Dye Solution

Radiation Exposure (R)	Transmission (%) 400 mμ	520 mμ	650 mμ	COD (mg/liter)
None	34	1	99	123
10^6	94	99	99	98
5×10^6	99	99	100	84

Samples of the unirradiated and irradiated solutions were filtered through a 0.80-μm Millipore filter, and the absorbances at 420, 520, and 620 mμ were measured. The color units and percent color reduction were calculated and are shown in Table 8.

Table 8. Color Reduction of ICI America Procion Brilliant Red H3BS Dye Solutions

Radiation Exposure (R)	Dilution Factor	Absorbances at 420 mμ	520 mμ	620 mμ	Color Units	% Color Reduction
None	4	0.10	0.58	0	2.62	0
10^6	1	0	0	0	0	100
5×10^6	1	0	0	0	0	100

d. Intracolor Intrasperse Blue BNG Dye Solution

The radiolytic oxidation of Intracolor Intrasperse Blue BNG (an anthraquinone dye) solution was investigated. This dye was furnished as a standard by arrangement with the American Association of Textile Chemists and Colorists. The solution contained 1.51 g dye, 0.084 g intravon G, and 1.51 g carolid per gallon of solution. The pH was adjusted to 6.5 with monosodium phosphate. Samples of this dye solution under 1500 psi oxygen were irradiated at doses of 10^6 and 5×10^6 R in the cobalt irradiator. The solution became a lighter blue as it was given 5×10^6 R exposure. The results of these irradiations are shown in Table 9.

Table 9. Transmission and COD of Intracolor Intrasperse Blue BNG Dye Solutions

Radiation Exposure (R)	Transmission (%) 550 mμ	640 mμ	700 mμ	COD (mg/liter)
None	2	0.5	1	752
10^6	5	2	2	555
5×10^6	43	42	43	347

Samples of unirradiated and irradiated solutions were filtered through a 0.80-μm Millipore filter, and the absorbances at 430, 530, and 630 mμ were measured. The color units and percent color reduction were calculated, and the results are shown in Table 10. There is actually a color gain with a 10^6 R exposure for the filtered solutions. Further radiation doses resulted in a color loss. A 5×10^6 R exposure dose gave a 48.2% color reduction.

Table 10. Color Reduction of Intracolor Intrasperse Blue BNG Dye Solutions

Radiation Exposure (R)	Dilution Factor	Absorbances at 430 mμ	530 mμ	630 mμ	Color Units	% Color Reduction
None	4	0.120	0.166	0.232	2.072	0
10^6	4	0.200	0.182	0.212	2.376	-14.7[a]
5×10^6	1	0.33	0.32	0.35	1.00	48.2

[a]Percent color gain.

Complete absorption data were taken on both the filtered starting solutions and the solutions with 10^6 R exposure for the range 390 to 710 mμ. A reduction was observed at 610 mμ for the irradiated solution, and a gain was observed at 430, 590, and 710 mμ for the 10^6 R exposure. The peak of the absorbance curve was reduced, but the curve was flattened out more. Of the four dyes tested, this dye was the hardest to decolorize with radiolytic oxidation.

The effect of $FeSO_4$ additions to Intracolor Intrasperse Blue BGN dye effluent before the gamma irradiation was investigated as a means to accelerate the dye removal or destruction from the effluent. Ferrous sulfate (0.2 and 0.4 g/liter) was added to the dye effluent at pH 6. Also ferrous sulfate (0.4 g/liter) was added to the dye effluent at pH 12. The results of the irradiation are shown in Table 11. The addition of 0.4 g/liter of $FeSO_4$ to the dye effluent did enhance the radiolytic decolorization and dye removal with 5×10^6 R exposure. This addition raised the color removal from 48 to 95%, which meets the color removal specifications.

The addition of $KMnO_4$ was also investigated as an aid for the color removal, but the results were negative.

Table 11. Effect of $FeSO_4$ Additions and of pH of the Effluent on Gamma Irradiation of Intracolor Intrasperse Blue BGN Dye Effluent

Radiation Exposure (R)	Dilution Factor	Absorbances[a] at 430 mμ	530 mμ	630 mμ	Color Units	% Color Reduction
		0.2 g/liter $FeSO_4$, pH 6				
None	1	0.075	0.092	0.120	1.148	0
10^6	4	0.428	0.310	0.305	4.172	-271[b]
5×10^6	1	0.160	0.119	0.089	0.368	68

Table 11. Continued

Radiation Exposure (R)	Dilution Factor	Absorbances[a] at 430 mμ	530 mμ	630 mμ	Color Units	% Color Reduction
		0.4 g/liter $FeSO_4$, pH 6				
None	4	0.092	0.088	0.072	1.008	0
10^6	4	0.298	0.181	0.170	2.596	-148[b]
5×10^6	1	0.010	0.014	0.015	0.039	95.8
		0.4 g/liter $FeSO_4$, pH 12				
None	11	0.200	0.164	0.195	6.167	0
10^6	20	0.093	0.067	0.082	4.840	-215[b]
5×10^6	4	0.148	0.082	0.065	4.180	65.2

[a]Absorbances on filtered solution (micropore 0.8 μm).
[b]Color increase.

2. Radiolytic Oxidation of Dye Waste Solutions with a Dynamic System

Development work at ORNL has been concentrated on the high oxygen pressure radiolytic oxidation of objectionable chemicals in waste effluents. A small dynamic demonstration system has been developed[4] by which it is possible to pump a waste effluent through a holdup reservoir located in a cobalt-60 gamma irradiator.

This dynamic system was used for the radiolytic oxidation of Intracolor Intralite Fast Brilliant Blue 2GLL dye effluent, one of the dyes investigated by static radiolytic oxidation. This dye is readily decolorizable by radiolytic oxidation. The effluent was pumped at various pumping speeds through a stainless steel coil containing 130 g of 10-14 mesh charcoal in a 10^7-R/hr gamma field. The effluent was sampled only after an equilibrium was reached for each pumping speed. Table 12 shows the color reduction of this blue dye at various pumping speeds. The color of the dye effluent at the start was a deep blue but changed to a lavender blue at a 1.25-liter/hr pumping speed. The effluent was an olive color at pumping speeds of 0.35-0.50 liter/hr. As the pumping speed of the dye solution was changed from 1.25 to 0.35 liter/hr, the color reduction was increased from 79 to 86%. The charcoal absorbed only a small amount of the blue dye and hence was not effective in holding up the dye for the radiolytic oxidation step.

Table 12. Color Reduction of Intracolor Intralite Fast Brilliant Blue 2GLL Dye Solution[a] by Radiolytic Oxidation

Sample Pumping Speed (liter/hr)	Dilution Factor	Absorbances at 480 mμ	580 mμ	680 mμ	Color Units	% Color Reduction
Original	4	0.13	0.61	0.21	3.80	0
1.25	3	0.08	0.11	0.80	0.81	79
0.50	3	0.08	0.08	0.06	0.66	83
0.35	3	0.07	0.07	0.04	0.54	86

[a]Solution filtered through a 0.80-μm Millipore filter.

C. Radioisotope Characterization, Quality Control, and Standards

1. Radioisotope Characterization

Suggestions were made in response to an inquiry about production and measurement of 4.5-hr indium-115m. Formation is by inelastic scattering of fast neutrons, and it was pointed out that simultaneous production of indium-114m and indium-116m could be minimized by use of a thermal-neutron absorber such as gadolinium or cadmium and a resonance absorber, indium itself.

The literature on cross sections of strontium isotopes was reviewed. Little information was found, some estimates were made from theory, and an inquiry was sent to the National Neutron Cross Section Center at BNL.

In response to inquiries from NBS, related to their preparation of new standards, a supply of old cesium-137 (free of cesium-134) was located, and information was given on silver-108m and enriched silver-109.

2. Radioisotope Special Analysis and Quality Control

A report is being prepared on local radioisotope assay practices, giving details for selected ones, and emphasizing the relationship between our calibrations and those of NBS. In collaboration with other interested people, a manual on calibrations will be prepared containing methods acceptable to organizations active in fields which require such measurements. Standards of cadmium-109, nickel-63, carbon-14, cobalt-60, and tritium have recently been ordered from NBS, thus updating our traceability as has been recommended. The K x rays from the cadmium-109 source, of average energy about 22 keV, will be used as a substitute standard to calibrate dose-rate instruments for measurement of nickel-63 bremsstrahlung. To establish the consistency of measurements with a 4π ionization chamber, readings were made of four cesium-137 sources and a 5-μg radium standard, which had been read by another person about 12 years earlier. The cesium readings were normalized to that of radium, correcting for 0.5% decay in the latter. Using our value for the half-life of cesium,

30.18 years, the calculated values agreed with those observed within -0.2% to +0.2%. This result is consistent with the previous observation that the precision is about 0.2% at the activity level involved, provided proper readout techniques are used.

The International Organization for Standardization has agreed to use the descending order when writing a date (ISO Recommendation 2014). Thus, one would write 1971 April 1, or 1971-04-01. Additional digits could be added for hours-minutes or decimal-day times. It seems reasonable to follow this practice in our work, and it has been called to the attention of NBS, ASTM, NRC, AOAC, ANS-ICONS, and commercial radioisotope suppliers.

For ASTM Committee D-19, a gamma spectrometry method was extensively revised, and material was prepared on standards, statistics, and calculations for inclusion in a general procedure for radioactivity measurements. Two methods for neutron flux measurements were reviewed for Committee E-10. Quality control practices and a draft of a brochure on standards were reviewed for a commercial supplier of radioisotopes.

D. Radioisotope Safety

1. Tritium Foils

A study to determine tritium losses from foils used in certain types of gas chromatograph-detectors under various conditons of use is in progress. Data obtained previously[5] indicated that tritium losses as a function of temperature increased slowly with increasing temperature to a break point, above which the losses increased at a much higher rate. Additional data have been obtained to determine more accurately the temperature at which the break point occurs for each type of foil. The tritium losses from the 250-, 500-, and 1000-mCi/in.^{2} foils when new foils were heated for 1 hr in an argon flow are given in Fig. 2. The temperatures at which the break points occurred are 238, 198, and 200°C respectively for the 250-, 500-, and 1000-mCi/in.^{2} foils. These values are slightly different from those previously reported.

Tritium losses as a function of operating time at 225°C (maximum temperature allowed by USAEC regulations) were obtained in an argon flow for each type of foil. The losses were determined during each of the first two 1-hr periods and during each of the following eight 2-hr periods for each foil. The results are shown in Fig. 3. The losses shown at 1 and 2 hr are the total losses occurring during the first and second hour of operation respectively. The loss shown at 4-hr is the total loss occurring during the third and fourth hour, since it covered a 2-hr sample period. Similarly, the remaining samples up to 18 hr cover tritium losses for 2-hr periods.

---

[5]A. F. Rupp, *Radioisotope Program (8000) Progress Report for March 1971*, ORNL-TM-3380, Oak Ridge National Laboratory.

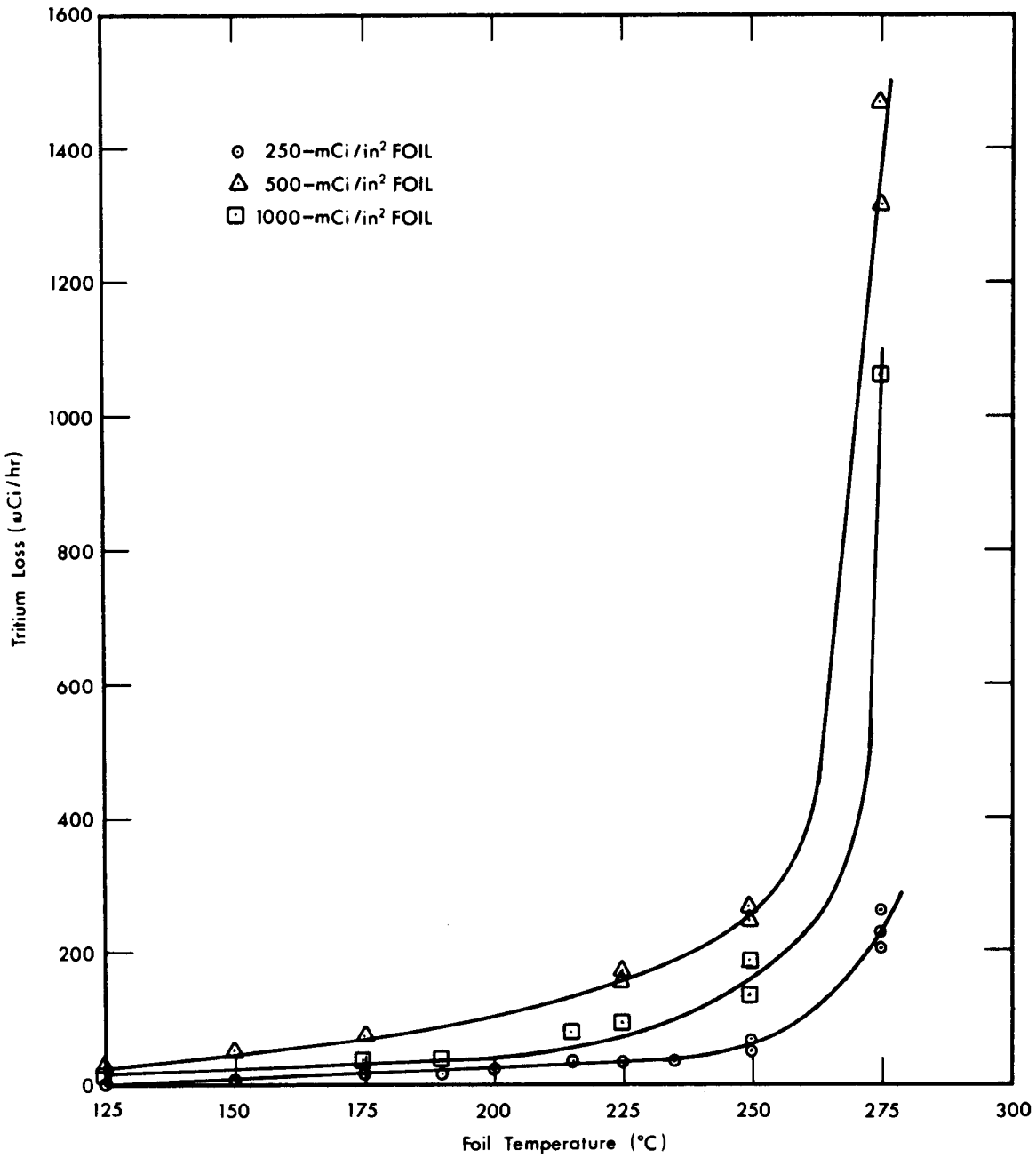

Fig. 2. Tritium Loss as a Function of Temperature in Argon.

Tests were also conducted to determine the total tritium content in the foils by heating the foils at 600°C for 2.5 hr in a flow of air. The amount of tritium released from the nominal 250-, 500-, and 1000-mCi/in.^{2} foils was determined for each of four foils of each activity level. The results (Table 13) indicate that considerably more tritium is present in the foils than is indicated by the manufacturer's stated nominal activity.

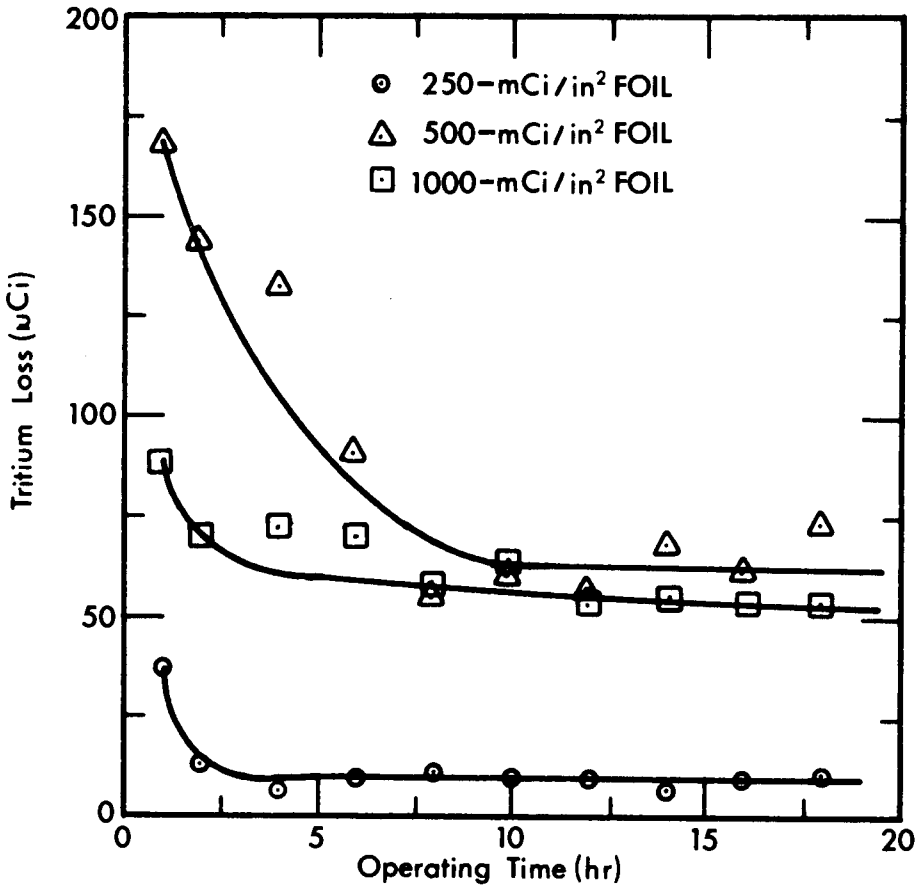

Fig. 3. Tritium Loss as a Function of Time in Argon Flow at 225°C.

Table 13. Comparison of Manufacturer's Nominal Activity With Experimental Determination of Activity in Foils

Manufacturer's Nominal Activity (mCi/in.^{2})	(mCi)	Average of Four Determinations (mCi)
250	62.5	124
500	125	161
1000	250	380

TECHNOLOGY UTILIZATION - 08-01-05

A. Information Center

In July, 80 requests for information were filled with dispatch of 170 items, approximately 60% of which had already been prepared in the IIC and 30% depending on general background information of IIC staff. Fifteen sales letters were translated. A list of reviews in progress is shown below:

Title	Author(s)	Status (% Complete)
Iodine-125	P. S. Baker and Martha Gerrard	35
Patent Literature on Process Radiation and Irradiator Design, Part 2. British and Canadian Patents, 1950 through 1970	R. E. Greene, Helen S. Warren, and P. S. Baker	35
Potato Sprout Inhibition by Radiation, Part 2	F. E. McKinney	50
Selected Abstracts of World Literature on Production and Industrial Uses of Radioisotopes, Part 2 of 1971	Martha Gerrard and P. S. Baker	75
Self-Diffusion in Liquids	F. J. Miller	75
Technetium-99m: Preparation and Uses	Martha Gerrard and P. S. Baker	65
Radioisotopes in the Textile Industry	F. J. Miller	95
Grain Disinfestation — A Worldwide Review	F. E. McKinney	20
Presowing Irradiation of Seed	Russian book translated and edited by Martha Gerrard	Final typing being proofed
Iodine-131 Production Methods	French report being translated by Martha Gerrard	References being checked
Radioelectrochemistry	Helen P. Raaen	Final draft being proofed
Nuclear Methods in Study of Environment	Helen P. Raaen	80
Fruit and Vegetable Bibliography (revision)	F. E. McKinney	Update complete; material being added
Radioisotope Briefings for Industry — Minerals	R. H. Lafferty	50
Semiconductors	H. P. Raaen	In progress
Special Sources (supplement)	F. E. McKinney	50
Bibliography of DID Contractor Publications	P. S. Baker	50
Use of Isotopes in Monitoring and Control of Environmental Pollution	W. E. Mott and Martha Gerrard	60
Effect of Gamma Radiation on Nonalcoholic Drinks and Wine — Brandy Products (Russian book)	Martha Gerrard and P. S. Baker	75

B. Isotopes and Radiation Technology

Isotopes and Radiation Technology galley proofing was completed for 9(1) and started for 9(2); writing and editing were continued for 9(3).

C. Publications

M. Gerrard, Milk Preservation by Ionizing Radiation: Literature Review, published in *Food Irradiation*, July-December 1970, pp. 21-24.

It became necessary to reprint the *Isotope User's Guide*. An additional 1500 copies were ordered to supplement the approximately 2500 that have already been distributed.

RADIOISOTOPE SALES

Shipments made during the month include 15,318 Ci of strontium-90 to Gulf Energy and Environmental Systems, 457,055 Ci of strontium-90 to the U. S. Navy, 4,000 Ci of tritium to New England Nuclear Corporation, 230 Ci of krypton-85 to General Electric Company, St. Petersburg, Florida, 50 Ci of enriched krypton-85 and 30,000 Ci of tritium to Radiochemical Centre, England, 500 Ci of strontium-90 to AB Atomenergi, Sweden, and 5,001 Ci of promethium-147 to Mitsubishi New York, Japan. Other shipments included 109 Ci of xenon-133, 203 Ci of krypton-85, 37,065 Ci of tritium, 2.5 Ci of 21.87% enriched krypton-85, 0.5 Ci of 26.5% enriched krypton-85, 50 Ci of 15.25% enriched krypton-85, 353 Ci of tritium-helium mixture, 0.2 mCi of ruthenium-106, 1 μCi of plutonium-236, and 44 μCi of argon-37.

The radioisotope sales proceeds and shipments for fiscal years 1970 and 1971 are given in Table 14.

Table 14. Radioisotope Sales and Shipments

Item	Income for FY 1970	Income for FY 1971
Inventory items	$ 671,452	$ 631,206
Major products	114,494	117,378
Radioisotope services	319,246	310,872
Cyclotron irradiations	134,046	124,016
Miscellaneous processed materials	80,893	66,064
Packing and shipping	77,657	86,214
Total Income	$1,397,788	$1,335,750
Number of Shipments	2,677	3,099

ADMINISTRATIVE

Visitors to the IDC and travel by IDC personnel are given in Tables 15 and 16.

Table 15. Visitors to IDC

Affiliation	Purpose of Visit
NASA, Langley Field	Discuss use of ORNL 86-Inch Cyclotron for radiation damage studies of space devices
National Institute for Radiobiology and Radiation Hygiene, Budapest, Hungary	Tour IIC
Smithsonian Institution for Science Information Exchange, Washington, D. C.	Tour IIC
Great Lakes Research Corporation Elizabethton, Tennessee	Obtain information on the uses of isotopes
Oak Ridge Associated Universities	Hear talk on "Isotope Utilization"
Southeastern Educators	Tour IDC
Israel Atomic Energy	Discuss RIST program

Table 16. Travel by IDC Personnel

Site Visited	Purpose of Visit
AEC, Washington, D. C.	Discuss curium-244 program with Division of Space Nuclear Systems
Corps of Engineers Washington, D. C.	Discuss RIST Program field test
AEC, Washington, D. C.	Assist in writing brochure on Isotope Applications for Geneva Conference

PUBLICATIONS

JOURNALS

P. J. Hurley, M. Cooper, R. C. Reba, J. K. Poggenburg, and H. N. Wagner, Jr., *J. Nucl. Med.* 12(7), 516-19 (1971).

REPORTS

A. F. Rupp, *Radioisotope Program (8000) Progress Report for June 1971*, ORNL-TM-3501, Oak Ridge National Laboratory.

E. Lamb, *Isotopic Power Fuels Monthly Status Report for June 1971*, ORNL-CF-71-7-17, Oak Ridge National Laboratory.

INTERNAL DISTRIBUTION

1. A. L. Allen
2. M. A. Baker
3. P. S. Baker
4. E. E. Beauchamp
5. G. E. Boyd
6-8. T. A. Butler
9. F. N. Case
10. W. R. Casto
11. J. A. Cox
12. F. L. Culler
13. W. C. Davis
14. J. S. Drury
15. J. H. Gillette
16. H. R. Gwinn
17. R. F. Hibbs
18. K. E. Jamison
19. Lynda Kern
20. E. H. Kobisk
21. E. Lamb
22. R. E. Leuze
23. J. L. Liverman
24. L. O. Love
25. W. S. Lyon
26. R. E. McHenry
27. F. M. O'Hara
28. W. W. Parkinson
29. J. J. Pinajian
30. M. E. Ramsey
31. S. A. Reynolds
32-33. R. A. Robinson
34. D. A. Ross
35. A. F. Rupp
36. R. W. Schaich
37. A. H. Snell
38. K. A. Spainhour
39. M. R. Skidmore
40-41. H. F. Stringfield
42. D. B. Trauger
43. A. M. Weinberg
44. J. C. White
45-46. Central Research Library
47. Document Reference Section
48-52. Laboratory Records Department
53. Laboratory Records - RC

EXTERNAL DISTRIBUTION

54. G. A. Andrews, ORAU, Medical Division, Oak Ridge, Tennessee
55. Hal Atkins, Brookhaven National Laboratory, Upton, New York
56. D. S. Ballantine, AEC, Washington, D. C.
57-60. R. F. Barker, AEC, Washington, D. C.
61. N. F. Barr, AEC, Washington, D. C.
62. O. M. Bizzell, AEC, Washington, D. C.
63. C. R. Buchanan, AEC, Washington, D. C.
64. R. L. Butenhoff, AEC, Washington, D. C.
65. T. D. Chikalla, PNL, Richland, Washington
66. D F. Cope, AEC Site Representative, ORNL
67. J. C. Dempsey, AEC, Washington, D. C.
68. W. K. Eister, AEC, Washington, D. C.
69. E. E. Fowler, AEC, Washington, D. C.
70. J. D. Goldstein, AEC, Washington, D. C.
71. A. Gottschalk, Argonne Cancer Research Hospital, Chicago, Illinois
72. F. D. Haines, AEC, Washington, D. C.
73-75. J. E. Hansen, PNL, Richland, Washington
76. J. W. Irvine, MIT (Consultant)
77. J. Lawrence, Lawrence Radiation Laboratory, Berkeley, California
78. J. E. Machurek, AEC, Washington, D. C.
79. J. N. Maddox, AEC, Washington, D. C.
80. J. C. Malaro, AEC, Washington, D. C.
81. W. E. Mott, AEC, Washington, D. C.
82. J. A. Powers, AEC, Washington, D. C.

83. G. J. Rotariu, AEC, Washington, D. C.
84. B. A. Ryan, AEC, Richland, Washington
85. W. D. Sandberg, AEC, Aiken, South Carolina
86. S. J. Seiken, AEC, Washington, D. C.
87. R. W. Shivers, AEC, Washington, D. C.
88. F. J. Skozen (Krizek), Argonne Cancer Research Hospital, Chicago
89. P. E Smith, ARHCO, Richland, Washington
90. L. G. Stang, Jr., BNL, New York
91-96. D. H. Turno, SRL, Aiken, South Carolina
97. A. R. Van Dyken, AEC, Washington, D. C.
98. Laboratory and University Division
99-100. Divison of Technical Information Extension