LOCKHEED MARTIN ENERGY RESEARCH LIBRARIES
3 4456 0514477 8

CENTRAL RESEARCH LIBRARY
DOCUMENT COLLECTION

OAK RIDGE NATIONAL LABORATORY
operated by
UNION CARBIDE CORPORATION • NUCLEAR DIVISION
for the
U. S. ATOMIC ENERGY COMMISSION

ORNL - TM - 3341

cy. 44

RADIOISOTOPE PROGRAM (8000) PROGRESS REPORT FOR FEBRUARY 1971

A. F. Rupp

OAK RIDGE NATIONAL LABORATORY
CENTRAL RESEARCH LIBRARY
DOCUMENT COLLECTION
LIBRARY LOAN COPY
DO NOT TRANSFER TO ANOTHER PERSON
If you wish someone else to see this document, send in name with document and the library will arrange a loan.
UCN-7969
(3 - 3-67)

NOTICE This document contains information of a preliminary nature and was prepared primarily for internal use at the Oak Ridge National Laboratory. It is subject to revision or correction and therefore does not represent a final report.

This report was prepared as an account of work sponsored by the United States Government. Neither the United States nor the United States Atomic Energy Commission, nor any of their employees, nor any of their contractors, subcontractors, or their employees, makes any warranty, express or implied, or assumes any legal liability or responsibility for the accuracy, completeness or usefulness of any information, apparatus, product or process disclosed, or represents that its use would not infringe privately owned rights.

ORNL-TM-3341

Contract No. W-7405-eng-26

Isotopes Development Center

RADIOISOTOPE PROGRAM (8000) PROGRESS REPORT FOR FEBRUARY 1971

A. F. Rupp

Work Sponsored by
AEC Division of Isotopes Development

MARCH 1971

OAK RIDGE NATIONAL LABORATORY
Oak Ridge, Tennessee
operated by
UNION CARBIDE CORPORATION
for the
U. S. ATOMIC ENERGY COMMISSION

LOCKHEED MARTIN ENERGY RESEARCH LIBRARIES

3 4456 0514477 8

CONTENTS

Page

RADIOISOTOPE PRODUCTION AND MATERIALS DEVELOPMENT 1

REACTOR-PRODUCED ISOTOPES - 08-01-01. 1

A. Biomedical Radioisotopes. 1

1. Phosphorus-33 1
2. Potassium-43. 2
3. Barium-135m 3

B. Reactor Products Pilot Production 4

C. Miscellaneous 4

1. HFIR Target Testing 4

ACCELERATOR-PRODUCED ISOTOPES - 08-01-02. 4

A. Biomedical Radioisotopes. 4

1. Indium-111. 4
2. Gallium-67. 5
3. Rubidium-84 5
4. Bismuth-206 6

B. Accelerator Pilot Production. 11

FISSION PRODUCTS - 08-01-03 11

A. Krypton-85 Enrichment 11

B. Krypton-85 Heat Source. 12

C. Cesium-137 Gamma Source Development 13

1. Cesium Source Form Development. 13

D. Cesium-137 Pilot Production 17

1. Processing and Process Status 17
2. Operational Summary 17
3. Current Orders. 17
4. Source Fabrication. 18

E. Strontium-90 Pilot Production 18

1. Processing and Process Status 18
2. Operational Summary 18
3. Current Orders. 18
4. Source Fabrication. 19

F. Short-Lived Fission Products Pilot Production 19

G. Promethium-147 Source Fabrication, Powder Shipments, and Current Orders 19

H. Strontium-90 Silicate Beta Sources. 19

1. Characterization. 19

I. Strontium-89 Source for Ames Research Center. 20

J. Dose Rate Measurements with Extrapolation Chamber 21

APPLICATIONS AND TECHNOLOGY SUPPORT - 08-01-04. 21

A. Radioisotope Characterization, Quality Control and Standards 21

1. Radioisotope Characterization 21
2. Radioisotope Special Analysis and Quality Control . . . 21

B. Radioisotope Safety 22

1. Dose-Rate Measurements of Self-Luminous Light Sources . 22

TECHNOLOGY UTILIZATION - 08-01-05 23

A. Information Center. 23

B. Isotopes and Radiation Technology 23

C. Translation 23

D. Publications. 23

RADIOISOTOPE SALES. 23

ADMINISTRATIVE. 25

PUBLICATIONS. 26

RADIOISOTOPE PROGRAM (8000) PROGRESS REPORT FOR FEBRUARY 1971

A. F. Rupp

RADIOISOTOPE PRODUCTION AND MATERIALS DEVELOPMENT

REACTOR-PRODUCED ISOTOPES - 08-01-01

A. Biomedical Radioisotopes

1. Phosphorus-33

The purpose of this project is to develop methods of preparing hundred-millicurie quantities of carrier-free phosphorus-33 containing $\leq$5% phosphorus-32. The two methods of producing phosphorus-33 being evaluated are based on the irradiation of highly enriched targets of sulfur-33 (>92 at. %) or chlorine-36 (approximately 63 at. %) in a fast neutron flux. Phosphorus-33 (25.2 days; 0.248-MeV β^-_{max}) has both a longer half-life and a lower energy beta than phosphorus-32 (14.3 days; 1.709-MeV β^-_{max}), which make it advantageous for autoradiography, long-term ecological and agricultural studies, synthesis of tagged complex organophosphorus compounds, and double labeling experiments.

One $K^{36}Cl$ target, which was recovered from a broken ampule in November and which had been subjected to caustic dissolution of the aluminum assembly, was degraded in enrichment. An isotopic analysis of the dissolved target confirmed the analysis of the recovered target, and the high phosphorus-32 content made this material unsuitable for a product. Two other targets of the same recovery batch were under irradiation; these were removed from the reactor for confirmation of the isotopic analysis. To replace these, two more targets containing 67% enriched $K^{36}Cl$ were inserted in the reactor. The origin of the natural chlorine which caused degradation of the target has not been ascertained. No chlorides were used in the recovery, but the caustic is prime suspect because of the amounts used. Degradation has not occurred in other targets where the ampule was not broken.

A target containing 0.82 g enriched (>90%) $K_2{}^{33}SO_4$ which has been under irradiation since June 1970 was removed for processing. The expected yield is approximately 0.5 Ci phosphorus-33.

Five 5-g KCl targets, which had been irradiated for several years, were opened and dissolved. Isotopic analyses showed the chlorine-36 enrichment to be in the range 41-46%. These targets will be reconstituted for further irradiation to enrich the chlorine-36 content.

2. Potassium-43

The objectives of this project are: to prepare potassium-43 by the $^{43}Ca(n,p)^{43}K$ reaction, using isotopically enriched ^{43}CaO targets, in quantities sufficient for medical and biological experiments; to define a method for separating potassium-43 from the target in a purity suitable for medical use; and to establish cooperative programs with medical institutions interested in evaluating its usefulness. Potassium-43 with a half-life of 22.4 hr and gamma-ray emissions of 0.373 and 0.617 MeV, is potentially useful for metabolic and clinical studies of blood flow, rejection of transplanted organs, and kidney function.

One batch of potassium-43 was made. Irradiated enriched (∿50%) ^{43}CaO was dissolved in HCl and processed by ion exchange. Data on the target and product are summarized in Tables 1 and 2.

Table 1. Yield of Potassium-43 from Calcium-43 Target

	Target 315
Weight ^{43}CaO (∿50%),[a] mg	154.8
Irradiation time, hr	65
Product delivery date	2-3-71
Total product at 8:00 AM on delivery date, mCi	
Potassium-43	8.48
Potassium-42	1.1 (13%)

[a]Recovered 12-23-70. Isotopic analysis: ^{40}Ca, 21.9 at %; ^{41}Ca, <0.001 at. %; ^{42}Ca, 8.31 at. %; ^{43}Ca, 50.7 at. %; ^{44}Ca, 19.0 at. %; ^{45}Ca, ≤0.01 at. %; ^{46}Ca, <0.001 at. %; and ^{48}Ca, 0.057 at. %.

Table 2. Radionuclides Found in Dissolver Sample by Gamma Scanning

Radionuclide	Half-life	Activity at Discharge[a] (mCi)	Specific Activity at Discharge (μCi per mg of target)
		No. 315	No. 315
Potassium-43	22.4 h	18.8	121
Potassium-42	12.4 h	5.1	33
Sodium-24	15.0 h	8.5	55
Manganese-56	2.58 h	8.8	57
Strontium-87m	2.83 h	24.4	158
Calcium-47	4.53 d	0.37	2.4
Scandium-46	83.8 d	2.0	13
Scandium-47	3.35 d	0.24	1.6

Table 2. continued

Radionuclide	Half-life	Activity at Discharge[a] (mCi) No. 315	Specific Activity at Discharge (μCi per mg of target No. 315
Europium-152m	9.3 h	0.6	3.6
Samarium-153	46.8 h	0.4	2
Cadmium-115	53.5 h	trace	—
Bromine-82	35.4 h	0.30	1.9

[a]Total target.

As was the case with targets 313 and 314 from this same CaO recovery batch, the dissolver contained a material insoluble in HCl. The solution was decanted and loaded on the ion exchange column. The product again showed a barely detectable trace of visible solids when it was taken to dryness before making up the final solution, but the amount appeared to be less than in the previous product.[1] No foreign activities or adverse reactions were detected. The potassium column elution was sharper than in the preceding run; calcium elution does not seem likely.

Shipments were made under medical cooperative programs to Johns Hopkins Medical Institution, Peter Bent Brigham Hospital, V. A. Hospital Durham, University Hospitals of Cleveland, and University of Mississippi Medical Center.

Three targets were processed for calcium recovery.

3. Barium-135m

Barium radioisotopes have been used as bone-scanning agents, but due to the high toxicity of barium, the radioisotope must have a high specific activity. Barium-135m (28.7 hr), which has a 268-keV gamma ray suitable for scanning, can be produced at specific activities of 30-35 mCi/mg of barium by using enriched barium-134 targets and irradiating them for three days at 2×10^{15} n/cm^2.sec.

Shipments of barium-135m were made to Johns Hopkins Medical Institution and Yale University Medical Center. The target form is ^{134}BaO, which is made by decomposing $^{134}Ba(NO_3)_2$ in a quartz ampule and sealing the ampule. The target is irradiated and dissolved in HCl and shipped with no further processing.

There is apparent difficulty with loss of target which boils out of the ampule during conversion and/or etches into the quartz. The target was supposed to contain 10.6 mg of barium. The solids analysis of the product indicated ∿4 mg total solids (probably as chloride), but this measurement

[1]A. F. Rupp, *Radioisotope Program (8000) Progress Report for January 1971*, ORNL-TM-3310, Oak Ridge National Laboratory.

is very uncertain at this level. If the assumption is made that the product contained 5 mg of barium, then the specific activities at the end of the 3-day irradiation of enriched (84%) barium-134 at approximately 2×10^{15} n/cm^2.sec are:

Nuclide	Half-Life	Specific Activity per mg of Target Element
Barium-135m	28.7 h	39 mCi/mg
Barium-139	83 m	38 mCi/mg
Barium-133m	38.9 h	0.14 mCi/mg
Barium-131	11.7 d	0.16 mCi/mg
Lanthanum-140	40.2 h	44 μCi/mg
Strontium-87m	2.83 h	84 μCi/mg
Barium-133	10.7 y	1 μCi/mg
Strontium-85	64.7 d	0.2 μCi/mg
Cesium-132	6.5 d	∿1 μCi/mg

B. Reactor Products Pilot Production (Production and Inventory Accounts)

Processed Units		Service Irradiations	
Radioisotopes	Amount (mCi)	Type	Number
Copper-67	23	Vanadium	1
Calcium-47	21	U_3O_8	2
Rubidium-86	7,700	Tellurium-122	1

C. Miscellaneous

1. HFIR Target Testing

Five hydraulic tube rabbits were tested this month with one failure. Three removable beryllium stringers were also tested with no failures.

ACCELERATOR-PRODUCED ISOTOPES - 08-01-02

A. Biomedical Radioisotopes

1. Indium-111

The objectives of this program have been to define and optimize the pertinent production parameters for the economical production of indium-111 of satisfactory quality for radiopharmaceutical manufacture. The current objectives are to obtain practical operating experience of the procedures developed by pilot production and to provide this radionuclide to interested customers as a special research material — in batch lots — for their evaluation. Indium-111 has been suggested for such studies as spinal-cerebral cisternography, aerosol lung studies, delayed brain scanning, visualization of the lymphatic system, metabolic studies of indium-labeled

macroaggregates and colloids, and tumor localization. Indium-111 has gamma emissions of 173 keV (89%) and 247 keV (94%) ideally suited for external detection and an optimal half-life (2.81 days) for labeling and distribution studies which must be carried out over 24 hr or longer.

One batch of indium-111 containing approximately 60 mCi was prepared, and portions of the batch were supplied to interested clinicians as a special research material. The production was less than one-half that expected from previous experience and was attributed to cyclotron operating difficulties. Analysis before chemical processing was begun indicated that the activity was initially low, rather than lost during processing. The experience obtained previously with this target configuration would indicate that this random perturbation is only reflective of the difficulties of cyclotron operation.

2. Gallium-67

The objectives of this program are to determine the optimal target configuration for gallium-67 (78.2 hr) production by the $^{68}Zn(p,2n)^{67}Ga$ reaction in acceptable purity and quantity and to provide gallium-67 for clinical applications research and development. Interest in this isotope has been spurred by evidence, obtained by the Medical Division of Oak Ridge Associated Universities (ORAU), of a high uptake of carrier-free gallium-67 by lymphoid tumors in both animals and humans.

Gallium-67 decays by electron capture with the emission of four main gamma rays of 93, 184, 296, and 388 keV with intensities of 40, 23, 20, and 8%, respectively.

Four gallium-67 preparations were shipped to ORAU, and 18 smaller orders were filled for other customers. Cyclotron target failure problems continue to plague this program at these large-scale production levels; therefore, machine operating parameters are being varied systematically between runs in an attempt to extend target life. Another approach being pursued to overcome these target failure difficulties is the fabrication of a similar tube-type target from a higher melting alloy, such as a Zn-Ni alloy. This new target will be tested as soon as fabrication is complete. A final draft of the accumulated production and processing experience has been prepared and submitted for publication.

3. Rubidium-84

The objectives of this program are to improve the technology for the production of higher purity rubidium-84 by use of an enriched krypton-84 target. Rubidium-84 is usually produced by proton bombardment of natural krypton targets, but this product is unsuitable for positron camera scanning due to appreciable amounts of rubidium-83 produced simultaneously. The use of rubidium-84 for myocardial scanning with a positron camera has increased the demand for a higher purity product.

One rubidium-84 run using an enriched krypton-84 target was made, and the product was supplied to customers. An inventory of the enriched krypton-84 target in current use was made, and it was found that only about 30% has been lost during the repeated target fillings and gas transfers and by the one target holder partial failure.[2] The krypton-84 target material has been transferred to a storage cylinder equipped with a gage to accurately measure the volume. The material will be inventoried after each transfer to determine target handling losses more accurately.

4. Bismuth-206

The objectives of this program are to evaluate the pertinent production parameters and to provide bismuth-206 for evaluation as a diagnostic radionuclide in medicine. Bismuth-206 has been used to delineate brain tumors in patients with known brain tumors which are poorly visualized by more common radionuclides. Even though very favorable tumor-to-background activity ratio has been obtained by earlier workers, the lack of an appropriate scanning system suitable for the high-energy emissions of this nuclide has retarded the evaluation of the isotope. A cooperative program has been established with Vanderbilt Medical School for the evaluation of bismuth-206 as a diagnostic radionuclide using their high-energy photon scanning system.

The examination of bismuth-206 by groups in Germany (Mundinger), Netherlands (van der Werff), and England (Matthews) has demonstrated that this isotope is better for brain tumor localization than other nuclides such as ^{43}K, ^{84}Rb, ^{52}Mn, ^{74}As, ^{110}Ag, ^{68}Ga, ^{65}Zn, ^{95}Zr, ^{131}I, and various compounds labelled with ^{131}I, ^{110}Ag, and ^{51}Cr. Bismuth-206 has a very high tumor/brain concentration ratio and has, as well, a low concentration in muscle and blood. Other bismuth radioisotopes are also potentially very useful because of the availability of half-lives varying from 28 yr for bismuth-207 to 1.8 hr for bismuth-201.

Bismuth-206 has been prepared by the $^{207}Pb(p,2n)^{206}Bi$ reaction using the window target holder and by the $^{206}Pb(p,n)^{206}Bi$ reaction using the capsule target configuration; both methods use isotopically enriched targets. The bismuth-205 contamination levels of purified bismuth products obtained from these two production paths have been determined to be 1.1 and 12.1% for the (p,2n) and (p,n) reactions, respectively. The patient radiation dose from bismuth-205, which is produced from proton-induced reactions on isotopic impurities in the enriched targets, is estimated to be approximately 2-1/2 times that from bismuth-206. As a result of these findings, development of the (p,2n) production path will be pursued to provide a lower dose product. Excitation functions shown by Bell and Skarsgard[3]

---

[2]A. F. Rupp, *Radioisotope Program (8000) Progress Report for October 1970*, ORNL-TM-3228, Oak Ridge National Laboratory, p. 9.
[3]R. E. Bell and H. M. Skarsgard, *Can. J. Phys.* 34, 745-66 (1956).

indicate that the (p,2n) production path should also offer larger production rates than the (p,n) path for the proton energies available, that is, ≤ 22 MeV.

Progress in the elucidation of the decay scheme of 6.24-day bismuth-206 continues. As reported earlier,[4] a bismuth-206 preparation, associated with 15.3-day bismuth-205 and stable bismuth-208, was passed through a mass spectrometer at the Lawrence Radiation Laboratory (Livermore). A portion of this isotopically separated bismuth-206 was examined at Livermore with a 7-cm^3, 12-mm depletion depth Ge(Li) detector which was the central unit in a Compton suppression spectrometer that had a typical resolution of 2.4 keV at 1332.5 keV.[5]

The Compton suppression is effected by operating a Ge(Li) detector surrounded by two large NaI(Tl) detectors. When a gamma ray undergoes a Compton event, the Compton-scattered gamma ray is detected by the NaI(Tl) detector. The NaI(Tl) detectors are operated in parallel so that the Ge(Li) detector can ignore the Compton signal, thus suppressing the Compton continuum by a factor of 5 to 7 without any reduction in the intensity of the photopeak or full-energy peak. In addition, all single and double escape peaks are greatly reduced in intensity: the former by a factor of 5 and the latter by a factor of 30. Compton suppression, particularly where many high-intensity, high-energy gamma rays are present, considerably increases the amount of information available in any gamma-ray spectrum. Moreover, the errors in the relative intensities of gamma rays of all energies are reduced because of the reduction in the background continuum which is predominantly a Compton continuum. Figure 1 demonstrates such a Compton-suppressed spectrum of bismuth-206.

Table 3 lists 65 gamma-ray energies and their relative intensities. Of these, 60 were placed in the decay scheme shown in Fig. 2.

Next month, the theoretical values of Hager and Seltzer[6] for the conversion coefficients of the gamma rays of bismuth-206 will be used to calculate the beta feeding of the 20 levels of lead-206.

---

[4]A. F. Rupp, *Radioisotope Program (8000) Progress Report for December 1970*, ORNL-TM-3282, Oak Ridge National Laboratory, p. 13.

[5]D. C. Camp, A Compton Suppression and Pair Spectrometer in *Proceedings of Conference on Semiconductor Nuclear-Particle Detectors and Circuits*, W. L. Brown, W. A. Higinbotham, G. L. Miller, and R. L. Chase, Eds., National Academy of Sciences, Washington, 1969, pp. 693-702.

[6]R. A. Hager and E. C. Seltzer, Internal Conversion Tables, Part 1: K-, L-, M-Shell Conversion Coefficients for Z = 30 to Z = 103, *Nuclear Data* A4, 1 (1968).

ORNL-DWG 71-1377

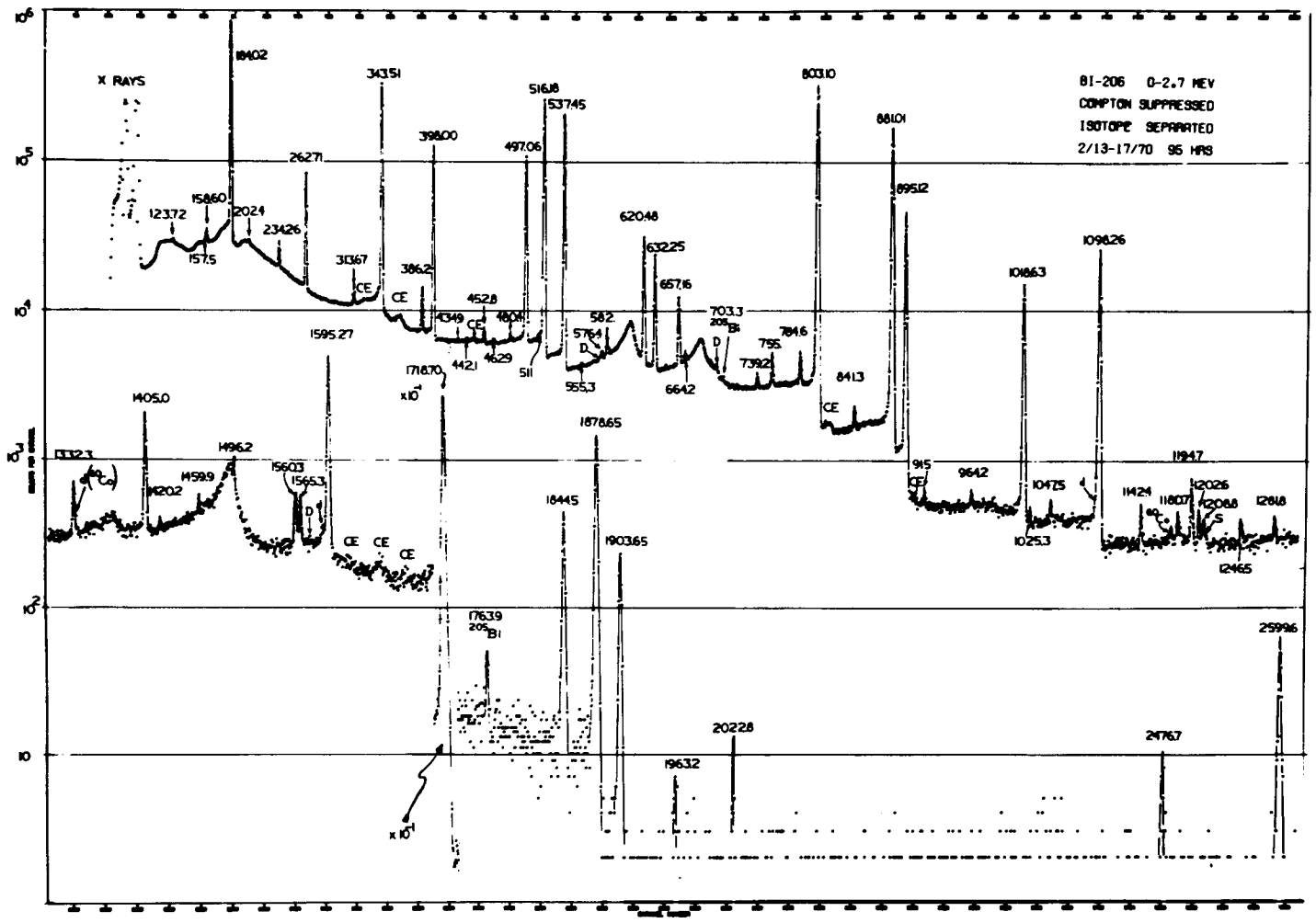

Fig. 1. Compton-Suppressed Spectrum of Bismuth-206.

Table 3. Gamma-Ray Energies and Their Relative Intensities for Bismuth-206

E_γ (keV)	I_γ	E_γ (keV)	I_γ	E_γ (keV)	I_γ
123.54	23 ± 2	620.4	5,820 ± 60	1208.76[a]	50 ± 5
157.52	36 ± 4	632.25	4,520 ± 50	1246.46	85 ± 8
158.60	83 ± 8	657.16	1,930 ± 30	1281.81	66 ± 7
184.02	16,000 ± 300	664.17	99 ± 5	1332.33	285 ± 15
202.44	44 ± 4	739.24	159 ± 8	1405.01	1,450 ± 25
234.26	244 ± 12	754.96	533 ± 10	1420.22[a]	43 ± 4
262.71	3,050 ± 50	784.58	542 ± 10	1459.9	81 ± 8
313.67	363 ± 10	803.10	100,000	1496.18[a]	178 ± 10
343.51	23,700 ± 300	841.28	188 ± 9	1560.30	382 ± 20
386.20	522 ± 10	881.01	66,900 ± 700	1565.34	307 ± 15
398.00	10,860 ± 10	895.12	15,830 ± 160	1588.2	41 ± 4
434.89	23 ± 2	915.00	31 ± 3	1595.27	5,070 ± 60
442.14	38 ± 4	964.22	37 ± 4	1718.70	32,200 ± 350
452.84	158 ± 8	1018.63	7,680 ± 80	1844.49	575 ± 25
462.92	54 ± 5	1025.30	43 ± 4	1878.65	2,030 ± 40
480.38	90 ± 9	1047.55[a]	57 ± 6	1903.56	353 ± 15
497.06	15,480 ± 150	1093.31[a]	71 ± 7	1963.2	11 ± 2
516.18	41,200 ± 400	1098.26	13,650 ± 150	2022.8[a]	13 ± 2
537.45	30,750 ± 300	1142.37	112 ± 5	2439.0	5 ± 2
555.30	38 ± 4	1180.70	67 ± 7	2476.7	15 ± 2
576.36	113 ± 10	1194.69	280 ± 15	2599.6	131 ± 10
581.97	490 ± 25	1202.58	106 ± 6		

[a]Not placed in decay scheme.

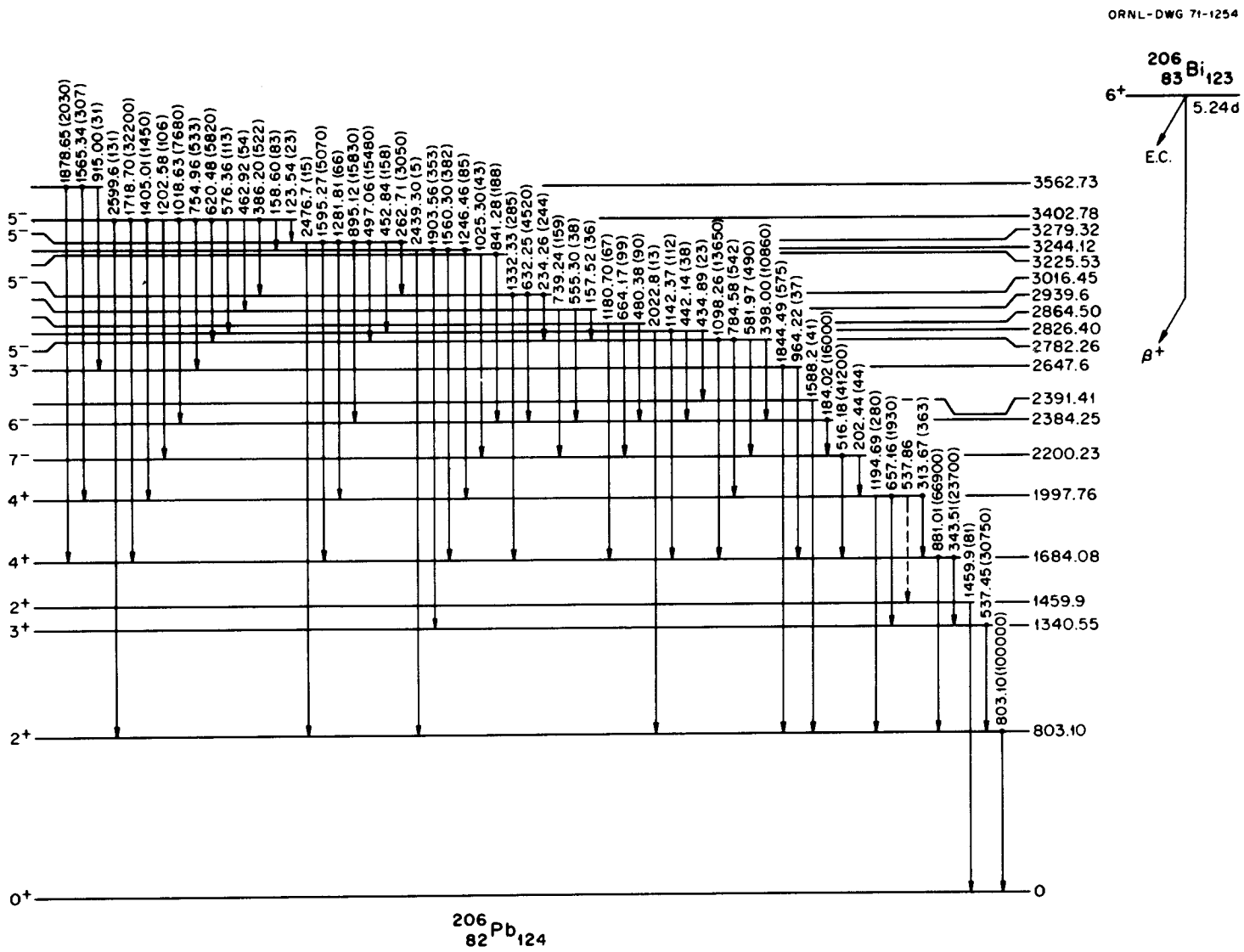

Fig. 2. Decay Scheme of Bismuth-206.

B. Accelerator Pilot Production (Production and Inventory Accounts)

Table 4 gives the February 1971 accelerator irradiations for ORNL and non-ORNL customers.

Table 4. Accelerator Irradiations and Runs for February 1971

Product	No. of Runs	Time (hr:min) Beam	Misc.	Total	Total Charges
		ORNL Programs			
Gallium-67	5	12:05	6:15	18:20	$1,967.43
Bismuth-206	1	1:00	1:00	2:00	221.40
Indium-111	1	2:30	:55	3:25	356.00
Cobalt-61	1	1:30	1:15	2:45	271.25
Total		17:05	9:25	26:30	$2,816.08
		Non-ORNL Programs			
Yttrium-87	2	5:15	2:30	7:45	$1,205.20
Rubidium-84	2	13:45	3:45	17:30	4,264.99
Radiation Damage	1	3:00	2:30	5:30	780.00
Total		22:00	8:45	30:45	$6,250.19

FISSION PRODUCTS - 08-01-03

A. Krypton-85 Enrichment

No gas transfers were made in any of the units (see Fig. 3) this month.

Unit	Activity in Unit (Ci)	Time Since Last Product Removal (days)	Count Rate in Product Section (counts/min) Jan 1971	Feb 1971
A	—	284	—	—
AB	1537	160	11,500	12,600
B	1406	160	9,400	10,850
C	1622	50	3,400	5,050
CD	2565	300	11,800	13,900
D	1470	50	3,200	5,350

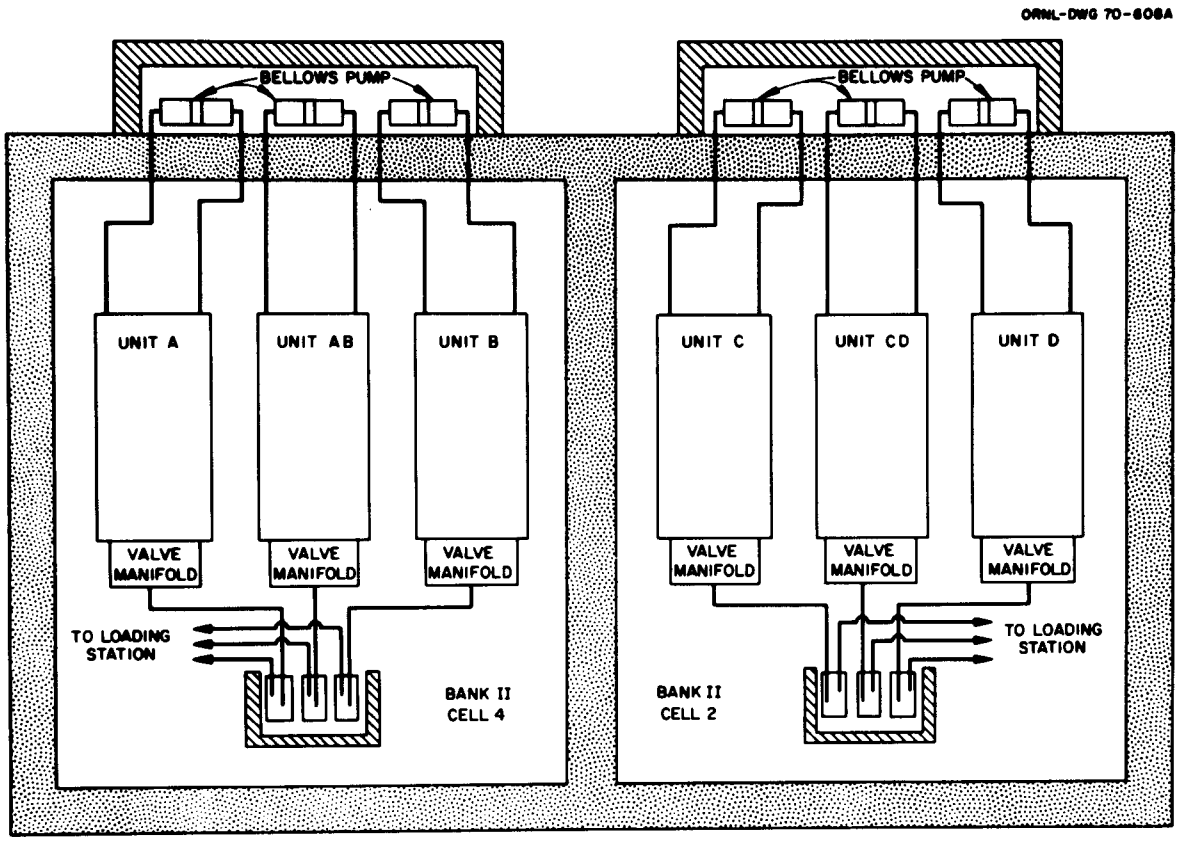

Fig. 3. Schematic Arrangement of Krypton-85 Columns.

B. Krypton-85 Heat Source

Some preliminary calculations have been made on a design of an 80-W (beginning-of-life) and an 80-W (end-of-life) krypton-85 heat source. The proposed source would utilize krypton-85 enriched to 10 wt % and would operate at 1100°F with safety factors built in to allow for emergency temperature increases to 1800°F. Capsules with operating pressures of 18,000, 20,000, 25,000, and 30,000 psi were examined for tungsten and W-25% Re as potential materials of construction. The source considered was of cylindrical shape with the minimum volume (i.e., inside length/diameter = 1). The capsule is also to be the primary shield for the system into which it is to be placed. A 5-year operating life of the capsule was assumed.

Table 5 shows the specific values applying to the source material and shielding.

Table 6 is a summary of the source data for the operating pressures (at 1100°F) specified.

Table 5. General Data on Source Material and Shielding[a]

80-W End-of-Life (112-W Beginning-of-Life)	
Specific activity of pure isotope (Ci/g)	410
Specific power of pure isotope (W/g)	0.623
Total krypton-85 required (Ci)	73,710
Total krypton-85 required (g)	179.8
Total weight of krypton required (g)	1,798
Volume of krypton at 0°C and 1 atm (liters)	474.365
Tungsten shielding for dose of 10 mrad/hr at 1 meter from source (in.)	1.33
Tungsten shielding for dose of 1 mrad/hr at 1 meter from source (in.)	1.68
Average molecular weight of 10% krypton-85	84.903
80-W Beginning-of-Life (57.15-W End-of-Life)	
Total krypton-85 required (Ci)	52,650
Total krypton-85 required (g)	128.4
Total weight of krypton required (g)	1,284
Volume of krypton at 0°C and 1 atm (liters)	338.76
Tungsten shielding for dose of 10 mrad/hr at 1 meter from source (in.)	0.95
Tungsten shielding for dose of 1 mrad/hr at 1 meter from source (in.)	1.20

[a]Applies to all operating pressures.

C. Cesium-137 Gamma Source Development

1. Cesium Source Form Development

Cesium-137 chloride has been the compound of choice for radiation sources in applications of moderate temperature conditions. In many respects cesium chloride is the ideal compound; the cesium weight per unit volume is high, the radiation resistance of the CsCl is excellent, the compatibility with stainless steel at ambient temperatures is excellent, and its preparation is straightforward. However, the projected conditions of use of cesium-137 gamma sources are increasingly severe with respect to temperature, and some applications indicate the need for a cesium source material which has low solubility.

Table 6. Krypton-85 Source Capsule Data for Various Operating Pressures (10 wt % ^{85}Kr)

80-W EOL (112-W BOL)				
Operating pressure at 1100°F (psi)	18,000	20,000	25,000	30,000
Loading pressure at 70°F (psi)	6,114	6,793	8,491	10,190
Inside volume of source (in.^{3})	74.95	67.5	53.98	44.98
Inside diameter and length (in.)	4.570	4.414	4.098	3.856
Pressure at 1800°F (psi)	26,083	28,978	36,217	43,457
Wall thickness of W capsule for 1800°F conditions (in.)	1.541	1.758	2.466	3.703
Cap thickness of W capsule for 1800°F conditions (in.)	1.750	1.782	1.850	1.906
Overall dimension of W capsule (in.)				
Diameter	7.652	7.930	9.030	11.262
Length	8.070	7.978	7.798	7.668
Weight of W capsule (lb)	207	228	311	503
Wall thickness of W-25% Re capsule for 1800°F conditions (in.)	1.095	1.221	1.584	2.058
Cap thickness of W-25% Re capsule for 1800°F conditions (in.)	1.552	1.580	1.640	1.690
Overall dimensions of W-25% Re capsule (in.)				
Diameter	6.760	6.856	7.266	7.972
Length	7.674	7.574	7.378	7.236
Weight of W-25% Re capsule (lb)[a]	142(171)	151(164)	179	225
80-W BOL (57.15-W EOL)				
Operating pressure at 1100°F (psi)	18,000	20,000	25,000	30,000
Loading pressure at 70°F (psi)	6,114	6,793	8,491	10,190
Inside volume of source (in.^{3})	53.52	48.18	38.55	32.12
Inside diameter and length (in.)	4.086	3.944	3.662	3.446
Pressure at 1800°F (psi)	26,083	28,978	36,217	43,457
Wall thickness of W capsule for 1800°F conditions (in.)	1.378	1.571	2.204	3.309
Cap thickness of W capsule for 1800°F conditions (in.)	1.565	1.592	1.653	1.704
Overall dimensions of W capsule (in.)				
Diameter	6.842	7.086	8.070	10.064
Length	7.216	7.128	6.968	6.854
Weight of W capsule (lb)	148	163	222	359
Wall thickness of W-25% Re capsule for 1800°F conditions (in.)	0.979	1.091	1.416	1.839
Cap thickness of W-25% Re capsule for 1800°F conditions (in.)	1.387	1.411	1.465	1.510
Overall dimensions of W-25% Re capsule (in.)				
Diameter	6.044	6.126	6.494	7.124
Length	6.860	6.766	6.592	6.466
Weight of W-25% Re capsule (lb)	102	107	128	160

[a]Weights in parentheses are weights with minimum shielding of 1.33 in.

In view of these projected conditions of use, the testing of $^{137}CsCl$ at elevated temperatures is being done and the development of a low solubility, temperature-resistant source form of cesium is being studied.

a. Alternative Cesium-137 Source Form Development

The final cesium-137 product is usually made into a pressed cylindrical form (locally referred to as "pellets") before it is encapsulated as a heat or radiation source. The feasibility of combining the calcining and pressing operations in the preparation of cesium niobates is being studied.

A few experimental runs have been made by loading the cesium niobate powders from the slurry reaction into the hot press. Some of the powders were partially calcined before introduction into the press. After the press was evacuated to ∿0.2-Torr pressure, the cesium niobate powders were gradually heated to temperatures up to 1000°C, and the temperature was maintained under a pressure of ∿4000 psi for as long as one hour. The material thus produced generally had the Nb/Cs mole ratio of ∿1.5-1.6 and was characterized by the high stability in aqueous solvents, i.e., ∿82-97% of the pulverized material was insoluble in distilled water and sea water at ∿80°C. Problems encountered in some runs include the tendency for the compounds to bond to the die and appreciable losses of the compounds during the hot pressing. However, it appears that these difficulties could be overcome by proper control of the heating rate, time and temperature of pressing, and the gaseous environment surrounding the die.

The semi-quantitative information that has been accumulated thus far for cesium niobates should serve as the guideline in the study on compounds of similar type, for example, cesium tantalates and cesium vanadate. Reactions involved in the formation of cesium tantalates are presumably slower than those for cesium niobates. In addition to the literature survey, studies on preparation of cesium tantalates and cesium vanadate will be limited to conditions that appear most favorable in the data obtained for cesium niobates.

b. Improvement and Characterization of $^{137}CsCl$ Source Form

Knowledge of the thermal expansion behavior of CsCl as well as of CsCl containing impurities (e.g., KCl) is of practical importance in the design of $^{137}CsCl$ source forms. Accordingly, the linear expansion characteristics of pure CsCl and of the 2 mole % KCl-CsCl mixture under the influence of temperature variation is being studied. Three different types of pellets, each approximately 0.5 in. diam by 1 in. long, were prepared from pure CsCl, 2 mole % KCl-CsCl (mechanical mixture), and 2 mole % KCl-CsCl (molten) at room temperature. The procedure used in the formation of the pellet followed that in practice at FPDL. A pellet density >97% of the theoretical value was achieved.

The linear expansion data for the three pellets were obtained by means of the Brinkmann dilatometer under a programmed variation in the temperature up to 550°C. Although the analysis of the data is still incomplete,

the preliminary results summarized in Table 7 indicate that the thermal expansion of either CsCl or 2 mole % KCl-CsCl is not completely reversible. The amount of expansion retained by the pellet after each heating-cooling cycle varies with the type of compound, but in all cases it tends to diminish with repeated heating-cooling cycles. The tendency to retain the residual expansion after cooling to room temperature is most noticeable in pure CsCl (12.9% after two runs). Addition of a small amount of KCl (e.g., 2 mole %) reduces this tendency considerably; after two runs the residual expansion is only 6.7% for the 2 mole % KCl-CsCl (molten).

Table 7. Thermal Expansion Characteristics of Pure CsCl and 2 Mole % KCl-CsCl Mixtures (Preliminary Result)

Run	Linear Expansion (% of starting length[a])			
	At 400°C[b]	At 500°C[b]	At Room Temperature	
			After Each Run	Cumulative[c]
		Pure CsCl		
1[d]	2.05	7.42	9.50	
2	1.39	4.02	3.12	12.92[e]
3	1.28	2.85	f	
		2 Mole % KCl-CsCl (Mechanical Mixture)		
1[d]	2.09	3.46	8.68	
2	1.54	5.53	1.46	10.26[e]
3	1.43	3.05	1.53	11.96
		2 Mole % KCl-CsCl (Molten)		
1[d]	3.34	9.02	5.38	
2	1.14	4.42	1.23	6.68[e]
3	1.20	4.58	0.77	7.50

[a]Length at the start of each run.
[b]Measurement made upon heating to the temperature indicated.
[c]Based on the original length.
[d]One run represents one heating-cooling cycle.
[e]After two runs.
[f]Pellet ruptured; no measurement made.

The absolute value of linear expansion generally changes little by the KCl addition. In all cases, there is a sudden jump in the percent linear expansion in the temperature range where the solid phase transformation of CsCl takes place (469°C). For pure CsCl there was an abrupt contraction (more than 1% of the starting length) between 460 and 480°C followed by a sudden expansion. No such behavior was observed in the 2 mole % KCl-CsCl mixtures. Table 7 shows that the amounts of linear expansion of the pellets studied at 500°C were approximately 2 to 4 times those at 400°C. This phenomenon confirms the finding of the high temperature x-ray study (reported earlier) that an addition of a small amount of KCl cannot eliminate the solid phase transformation of CsCl. A detailed analysis of the dilatometer data will continue.

D. Cesium-137 Pilot Production (Production and Inventory Accounts)

1. Processing and Process Status

No cesium-137 processing was done this month. The HAPO-I-C shipping cask is being prepared for return to the Atlantic Richfield Hanford Company and should be shipped during the first week in March. The current process status for cesium-137 is as follows.

Item	Cesium-137 (Ci)
In-process material	561,000
Cesium-137 chloride products	118,900
Sources in fabrication	0
Completed orders awaiting shipment	148,300

2. Operational Summary

	February 1971		FY 1971	
Item	Number	Amount (Ci)	Number	Amount (Ci)
HAPO shipments received	0	0	1	388,200
Product batches prepared	0	0	0	0
Sources fabricated	0	0	62	43,400
Special form containers loaded	8	101,800	17	198,800
Sources shipped	0	0	283	163,300
Special form containers shipped	0	0	12	98,000

3. Current Orders

Current orders for cesium-137 as sources or bulk powder are shown below:

Customer	Amount (Ci)	Estimated Shipping Date
J. L. Shephard and Associates	800	March 1971
Atomic Energy of Canada Limited	1,500	March 1971
C.E.A., France	200,001	March 1971
American Hoechst Corporation	5	April 1971
Brookhaven National Laboratory	203,000	June 1971
Lockheed-Georgia Company[a]	~35,000	June 1971
Total	440,306	

[a]The cesium-137 activity to be supplied by Lockheed-Georgia Company.

Orders on hand for cesium-137 as bulk powder or sources to be scheduled and shipped as released by the customer include Atomic Energy of Canada, ~154,300 Ci, and Radiation Resources, Inc., 200,001 Ci. Cesium sources containing 40,000 Ci are on hand awaiting receipt of shipping instructions from Radiation Resources, Inc.

4. Source Fabrication

An order for 200,001 Ci of $^{137}CsCl$ for C.E.A., France, is 50% complete. One shipping container with 101,583 Ci in eight powder cans is ready for shipment. Work is continuing on the remainder of this order.

E. Strontium-90 Pilot Production (Production and Inventory Accounts)

1. Processing and Process Status

Preparation of $^{90}Sr_2TiO_4$ continued; five batches with a total yield of approximately 150,000 Ci were run. Pressing of $^{90}Sr_2TiO_4$ pellets was started on the vacuum hot press. There were several cases of pellets sticking in the die and requiring high pressures for ejection; in some cases it was necessary to break the graphite punches in order to remove the pellet. The cause of the sticking is not yet known. In an attempt to prevent the sticking, a thin-wall graphite sleeve was used inside a TZM die body to present an all-graphite surface to the fuel, and this technique appears to be usable. Failure of an electrode in the vacuum hot press caused a shutdown of this unit for repair.

The current process status for strontium-90 is as follows.

Item	Strontium (Ci)
In-process material	1,020,000
Strontium-90 products	519,000
Sources in fabrication	145,000
Returned SNAP sources	295,000
Completed sources awaiting shipment	19,500

2. Operational Summary

	February 1971		FY 1971	
Item	Number	Amount (Ci)	Number	Amount (Ci)
HAPO shipments received	0	0	0	0
Product batches prepared	5	150,000	8	270,000
Sources completed	0	0	11	688,900
Special form containers loaded	0	0	25	53,400
Shipments to customers	1	105,500	29	796,700

3. Current Orders

Current orders for strontium-90 as sources or bulk powder are as follows.

Customer	Amount (Ci)	Estimated Shipping Date
U. S. Navy	208,000	March 1971
U. S. Navy	424,000	May 1971
Gulf Energy & Environmental Systems	~47,000	June 1971
Total	679,000	

An order is on hand for ∿20,000 Ci as bulk powder to be scheduled and shipped when released by Teledyne Isotopes, Inc.

4. Source Fabrication

A strontium-90 source that had been in storage for Teledyne Isotopes, Inc., since March 1969 was loaded into a Sentinel-25E generator and shipped. This source represented 105,500 Ci (717 W) when put into storage.

F. Short-Lived Fission Products Pilot Production (Production and Inventory Accounts)

Isotope	Number of Batches	Amount (Ci)
^{95}Zr-^{95}Nb	1	27
Ruthenium-103	1	11
Xenon-133	2	∿700
Iodine-131	1	22

G. Promethium-147 Source Fabrication, Powder Shipments, and Current Orders

The two outstanding orders for promethium as bulk powder are from McDonnell Douglas Astronautics Company for 50,000 Ci to be shipped from Richland, Washington, in March and from Minnesota Mining and Manufacturing Company for 2500 Ci to be shipped in May.

H. Strontium-90 Silicate Beta Sources

1. Characterization

The following studies are a part of the strontium silicate source characterization work.

Sample strontium silicate sources were fabricated containing aluminum matrix and graphite matrix, using inactive strontium silicate minibeads. These will be placed in an inert atmosphere and held at elevated temperatures (350, 500, and 650°C for the aluminum matrix, and 350 and 650°C for the graphite matrix) for an extended period of time to determine the long range effect of temperature on the interior of the capsules. The samples will be sectioned for metallographic examination at the end of the test period.

Four full strength (32.5-Ci/g) beta sources were immersed in 10% nitric acid, glacial acetic acid (17.5 *N*), 1.75 *N* acetic acid, and distilled water to observe the effect of the beta field on the corrosion rate. No effect was observed at the end of three weeks. Analysis of the solutions at the end of the test period will be used to determine precisely the corrosion rate.

The attrition rate studies of inactive strontium silicate minibeads were continued in a fluid bed reactor with toluene as the fluidizing medium. The reactor consisted of a 1-in.-diam glass column with a screen to support the minibeads. The measurements were made with a bed expansion of 300%. Results of the studies are shown in Fig. 4. The rate of attrition during the last measurement period was 6.46×10^{-6} gram per hour per gram of sample weight.

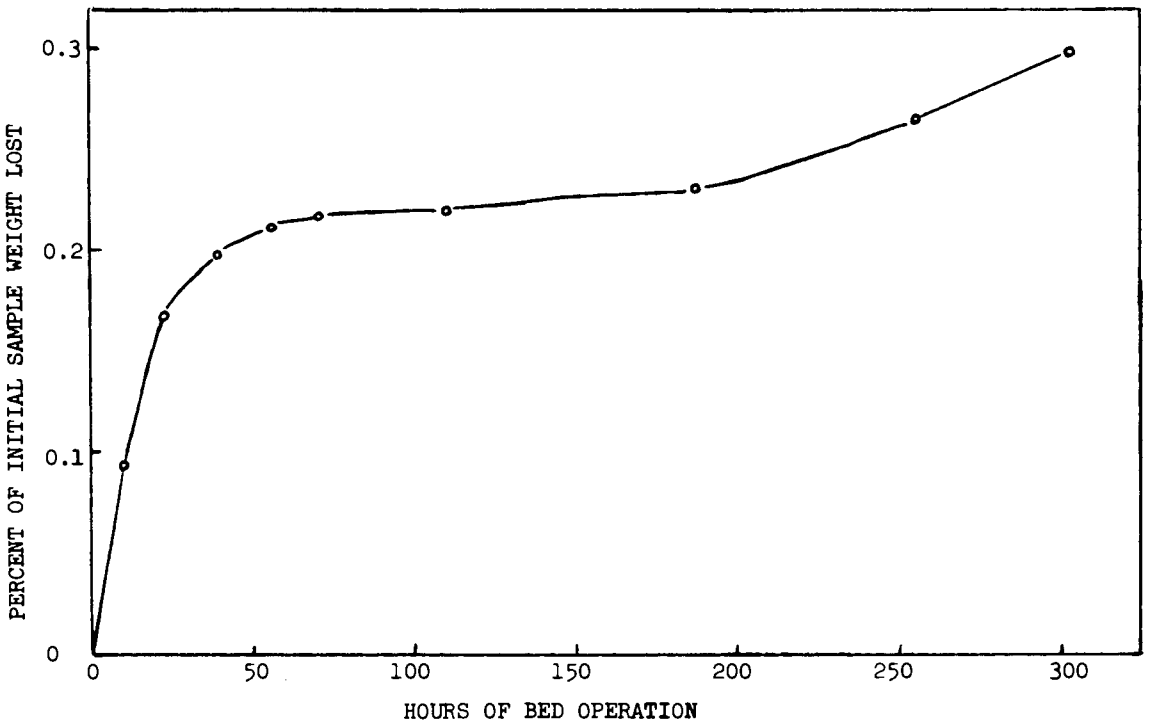

Fig. 4. Results of Attrition Rate Studies.

I. Strontium-89 Source for Ames Research Center

The Ames Research Center located at Moffett Field, California, is interested in obtaining homogeneous strontium-89 (51 days; 1.46 MeV β^-) beta sources for irradiating insect eggs. These sources are to be 1-1/4 in. by 1-1/4 in. square and contain sufficient radioactivity to deliver a dose of 800 rads over three days.

Filter paper was cut to size and bonded to 1.5-in. x 1.5-in. x 0.030-in.-thick aluminum pieces. A measured volume sufficient to wet the filter paper and containing approximately 61 μCi of strontium-89 was added dropwise to the source. After the source was dried, epoxy resin diluted with methyl ethyl ketone was added to the surface of the source and polymerized.

Radiation dose measurements made by an extrapolation chamber showed the radiation emitted to be approximately 33 rads/hr. This measurement is approximately three times the expected dose measurement, indicating

that there is little self-absorption in the source matrix and also that there is good reflection of the beta radiation from the aluminum backing.

Radiographs made with Polaroid 3000 speed film show that the activity distribution on the source was nearly homogeneous.

J. Dose Rate Measurements With Extrapolation Chamber

Additional source dose rate measurements were made using the extrapolation chamber. These included a samarium-151 source and a strontium-90 source. Measurement of the samarium source demonstrated the necessity for decreasing the accelerating electrode thickness (from 0.00025 to 0.00015 in.), when measuring low energy sources. The electrostatic attraction between the guard ring and the accelerating electrode, however, is enough to substantially deflect the thinner material and produce an inaccuracy in the measurements. A study is planned in which this effect can be precisely determined by comparing results from measurements made of a strontium-90 source using accelerating electrode materials of several different thicknesses.

APPLICATIONS AND TECHNOLOGY SUPPORT - 08-01-04

A. Radioisotope Characterization, Quality Control, and Standards

1. Radioisotope Characterization

In the three-year period since publication of our latest paper on half-lives, we have accumulated data on sixty nuclides. Some of the most significant values are: molybdenum-99, 66.02 ± 0.01 hr; iodine-131, 8.040 ± 0.001 days; gadolinium-153, 241.57 ± 0.17 days; and tungsten-181, 121.53 ± 0.09 days. The present tentative value for europium-155 is 4.96 ± 0.01 years. Other determinations are in progress, and a paper is being prepared for *Nuclear Science and Engineering*. Values are becoming standardized so that most are known as accurately as is necessary for practical application. The present value for molybdenum-99, for example, supersedes our old one of 66.7 hr and is in good agreement with other modern determinations.

2. Radioisotope Special Analysis and Quality Control

We are increasingly called upon to give information and recommendations relative to radioactivity standards. Requests were received from the U. S. Army and from IAEA, the latter in connection with the proposed directory of such standards. A representative of the Central Bureau for Nuclear Measurements in Geel, Belgium, has asked to visit ORNL in April, and he plans to attend the session on standards which we arranged for the Los Angeles ACS meeting. Suggestions were made for a similar session at the ANS meeting in June. Involvement in cooperative work of this kind is expected to increase as a result of the appearance of the report of the NRC standards panel (*National Uses and Needs for Standard Radioactive Materials*, National Academy of Sciences, Washington, D. C., 1970).

Copies are being distributed to those who participated in the survey through questionnaires and interviews and to other individuals and organizations whose work requires standards. Locally, standards of sulfur-35 were obtained from three suppliers. Agreement was good with the British Radiochemical Centre, within 3.2% against their certification of 4.5% accuracy. The product of another reputable supplier was found to be inaccurate by a factor of ten, and the supplier has confirmed the error. Our value agrees with the supplier's new one within 2.5%. An inexpensive product from a commercial supplier was low by a factor of seven. Overall, this is the worst intercomparison ever reported and points up the need for better quality control on the part of standards makers, preferably with intercomparison with the National Bureau of Standards. We have taken the opportunity to send a portion of one preparation to NBS for calibration.

B. Radioisotope Safety

1. Dose-Rate Measurements of Self-Luminous Light Sources

The response of several radiation survey meters to the radiation from commercially encapsulated krypton-85 light sources and promethium-147 self-luminous paint is being measured at several souce-to-detector distances in order to develop a suitable method for determining compliance with certain dose-rate regulations.

As a part of this study, the effect of thin radiation absorbers on the measured dose rates was determined. The measurements from an ORNL cutie pie and a Civil Defense meter are given in Table 8. The response is given for 7.7-, 24.9-, and 49.8-mg/cm^2 plastic absorbers placed between the source and the detector at source-to-detector distances of 1 and 5 cm. The response is also shown with no absorber for comparison. The distances were measured from the surface of the source to the surface of the detector window. The beta shield of the Civil Defense meter was placed in the "open" position for all measurements. The absorber materials were polyethylene and acetate. The results show that while very large dose rates can be measured on small promethium-147 sources with a cutie pie, they do not have much significance from a radiation hazard standpoint because the penetration is so low. An absorber of 7.7 mg/cm^2 is about equivalent to the dead surface layer of the skin and 49.8 mg/cm^2 is about equivalent to light weight neoprene gloves. Additional measurements with other instruments and thermoluminescent dosimeters are in progress for comparison with these preliminary results.

Table 8. Dose Rate Measurements of Light Sources

Absorber Thickness (mg/cm^2)	Detector Reading (mr/hr)							
	^{85}Kr Light Source		^{147}Pm Light Sources					
	200 mCi, 0.5-in. diam		5-mCi, 0.25-in.-diam Spot		100-μCi Watch Dial		2-mCi Compass Dial	
	CP	CDSM	CP	CDSM	CP	CDSM	CP	CDSM
	Source-to-Detector Separation = 1 cm							
None	208	>50	>10,000	46.7	108	0	4,100	6.2
7.7	203	>50	4,400	10.7	32	0	1,100	0.6
24.9	178	>50	62	8.7	0	0	12	0.5
49.8	168	>50	7	8.2	0	0	0	0.4
	Source-to-Detector Separation = 5 cm							
None	55	>50	3,100	1.5	21	0	740	0.2
7.7	52	>50	990	0.5	5	0	220	0
24.9	49	>50	11	0.4	0	0	2	0
49.8	48	>50	2	0.4	0	0	0	0

CP = Cutie Pie.
CDSM = Civil Defense Survey Meter.

TECHNOLOGY UTILIZATION - 08-01-05

A. Information Center

In January, 100 requests for information were filled with the dispatch of 157 documents or notes: 88 documents already prepared at IIC, 14 searches, and 55 notes based on the special knowledge and training of IIC personnel. Eight sales letters were translated. A list of reviews in progress is shown on page 24.

B. Isotopes and Radiation Technology

The manuscript for *Isotopes and Radiation Technology* 8(4) was sent to DTIE, and work on 9(1) was continued together with planning for 9(2).

C. Translation

H. Marfels, Glass Formation in the Cs_2O-Nb_2O_5 System, *Naturwiss.* 56(5): 283 (1969), ORNL-tr-2438, translated from German by Martha Gerrard.

D. Publications

Division of Isotopes Development Research and Development Projects, 1970, TID-4066, edited by IIC Staff (February 1971).

Ruth Curl (compiler), *List of AEC Radioisotope Customers with Summary of Radioisotope Shipments, FY 1970*, ORNL-IIC-32 (February 1971).

Title	Author(s)	Status, % Complete
Iodine-125	P. S. Baker and Martha Gerrard	30
Patent Literature on Process Radiation and Irradiator Design, Part 1. U. S. Patents 1950 Through 1968	R. E. Greene, Helen S. Warren, and P. S. Baker	Draft approved by DID; publication preparation in progress
Potato Sprout Inhibition by Radiation, Part 2	F. E. McKinney	50
Radioisotopes in the Steel Industry, Part 2	W. R. Pavlik, Republic Steel Corp. (F. E. McKinney, Ed.)	Ready for reproduction
Selected Abstracts of World Literature on Production and Industrial Uses of Radioisotopes, Part 4	Martha Gerrard and P. S. Baker	At reproduction
Self-Diffusion in Liquids	F. J. Miller	75
Strontium-90	Roberta Shor, R. H. Lafferty, Jr., and P. S. Baker	At reproduction
Technetium-99m: Preparation and Uses	Martha Gerrard and P. S. Baker	60
Radioisotopes in the Textile Industry	F. J. Miller	90
Grain Disinfestation - A Worldwide Review	F. E. McKinney	20
Permuted Isotopes and Radiation Technology Indexes (PIRTI) 1962-1969, Vols. 1-7	Helen Raaen, P. S. Baker, R. H. Lafferty, Jr., Ann S. Klein, and Linda P. Helton, Eds.	At reproduction
Presowing Irradiation of Seed	Russian book translated and edited	Final typing being proofed
Radiation Processing of Sewage	Martha Gerrard	At reproduction
Iodine-131 Production Methods	French report being translated by Martha Gerrard	Final typing being proofed
Fruit and Vegetable Bibliography (Revision)	F. E. McKinney	Ready for typing

RADIOISOTOPE SALES

An order was received from Gulf Energy and Environmental Systems for ∿15,400 Ci of strontium-90 as $SrTiO_3$ pellets to be encapsulated into liners, and an order was received from Minnesota Mining and Manufacturing Company for ∿5,100 Ci of promethium-147. Requests for quotations were received from Messerschmitt-Bolkow-Blohm GmbH in Germany for a 320-W (∿47,000 Ci) strontium-90 source and from Ing.-Buro Otbeat Sayer, Nuclear-Abteilung, Germany, for 100,000 Ci of tritium.

Shipments made during the month include 10,001 Ci of tritium to Radium-Chemie A. Zeller and Company, 200 Ci of krypton-85 to Radiochemical Centre, England, 2,608 Ci of promethium-147 to Minnesota Mining and Manufacturing Company, and 105,500 Ci of strontium-90 to Teledyne Isotopes, Inc. Other shipments include 288.37 Ci of xenon-133, 17.57 Ci of tritium, 322 Ci of krypton-85, 259 Ci of tritium/helium mixture, 5 Ci of 27.25% enriched krypton-85, and 20 Ci of 22.05% enriched krypton-85.

The radioisotopes sales proceeds and shipments for the first seven months of FY 1970 and FY 1971 are given in Table 9.

Table 9. Radioisotope Sales and Shipments

Item	7-1-69 thru 1-31-70	7-1-70 thru 1-31-71
Inventory items	$348,321	$376,259
Major products	65,063	75,220
Radioisotope services	133,985	196,179
Cyclotron irradiations	80,519	85,478
Miscellaneous processed materials	43,169	40,675
Packing and shipping	42,945	50,305
Total Radioisotope Sales Proceeds	$714,002	$824,116
Number of Radioisotope Shipments	1,440	1,881

ADMINISTRATIVE

Travel by IDC personnel and visitors to the IDC are given in Tables 10 and 11.

Table 10. Travel by IDC Personnel

Site Visited	Purpose
Wrightsville Beach, North Carolina	To discuss RIST program transport study test at Masonboro Inlet
Vanderbilt University Nashville, Tennessee	Complete final draft of europium-156 paper
New Orleans, Louisiana	Discuss with DID and NASA utilization of missile test site for isotope related work
Washington, D. C.	Discuss krypton production with DID
Washington, D. C.	To coauthor a review on isotopic techniques in study and control of environmental pollution

Table 11. Visitors to IDC

Affiliation	Purpose of Visit
Teledyne Isotopes, Inc.	Discuss strontium-90 generators
White Sands Missile Site	Discuss cobalt-60 and cesium-137 sources
National Oceanographic and Atmospheric Administration	To see operation of Isotopes Information Center

PUBLICATIONS

Reports

A. F. Rupp, *Radioisotope Program (8000) Progress Report for January 1971*, ORNL-TM-3310, Oak Ridge National Laboratory.

J. H. Gillette, *Isotopes Program (5000) Progress Report for Quarter Ending December 31, 1970*, ORNL-TM-3306, Oak Ridge National Laboratory.

Papers Presented

Malcolm Cooper, Peter J. Hurley, T. K. Natarajan, Frederick E. Lomas, Henry N. Wagner, and J. K. Poggenburg, Quantification of the Extent of Myocardial Infarction by Radionuclide Imaging of the Myocardium, presented at *American College of Cardiology, Twentieth Annual Scientific Session, Feb. 3-7, 1971, Washington, D. C.*

INTERNAL DISTRIBUTION

1. A. L. Allen
2. M. A. Baker
3. P. S. Baker
4. E. E. Beauchamp
5. G. E. Boyd
6-8. T. A. Butler
9. F. N. Case
10. J. A. Cox
11. F. L. Culler
12. W. C. Davis
13. J. S. Drury
14. J. H. Gillette
15. H. R. Gwinn
16. R. F. Hibbs
17. K. E. Jamison
18. Lynda Kern
19. E. H. Kobisk
20. E. Lamb
21. R. E. Leuze
22. J. L. Liverman
23. L. O. Love
24. W. S. Lyon
25. R. E. McHenry
26. F. M. O'Hara
27. W. W. Parkinson
28. J. J. Pinajian
29. M. E. Ramsey
30. S. A. Reynolds
31-32. R. A. Robinson
33. D. A. Ross
34. A. F. Rupp
35. R. W. Schaich
36. A. H. Snell
37. K. A. Spainhour
38. M. R. Skidmore
39-40. H. F. Stringfield
41. D. B. Trauger
42. A. M. Weinberg
43. J. C. White
44-45. Central Research Library
46. Document Reference Section
47-51. Laboratory Records Department
52. Laboratory Records - RC

EXTERNAL DISTRIBUTION

53. G. A. Andrews, ORAU, Medical Division, Oak Ridge, Tennessee
54. Hal Atkins, Brookhaven National Laboratory, Upton, New York
55. D. S. Ballantine, AEC, Washington, D. C.
56-59. R. F. Barker, AEC, Washington, D. C.
60. N. F. Barr, AEC, Washington, D. C.
61. O. M. Bizzell, AEC, Washington, D. C.
62. C. R. Buchanan, AEC, Washington, D. C.
63. R. L. Butenhoff, AEC, Washington, D. C.
64. T. D. Chikalla, PNL, Richland, Washington
65. D. F. Cope, AEC Site Representative, ORNL
66. J. C. Dempsey, AEC, Washington, D. C.
67. W. K. Eister, AEC, Washington, D. C.
68. E. E. Fowler, AEC, Washington, D. C.
69. J. D. Goldstein, AEC, Washington, D. C.
70. A. Gottschalk, Argonne Cancer Research Hospital, Chicago, Illinois
71. F. D. Haines, AEC, Washington, D. C.
72-74. J. E. Hansen, PNL, Richland, Washington
75. J. W. Irvine, MIT (Consultant)
76. J. Lawrence, Lawrence Radiation Laboratory, Berkeley, California
77. J. E. Machurek, AEC, Washington, D. C.
78. J. N. Maddox, AEC, Washington, D. C.
79. J. C. Malaro, AEC, Washington, D. C.
80. W. E. Mott, AEC, Washington, D. C.
81. J. A. Powers, AEC, Washington, D. C.
82. G. J. Rotariu, AEC, Washington, D. C.
83. B. A. Ryan, AEC, Richland, Washington

84. W. D. Sandberg, AEC, Aiken, South Carolina
85. S. J. Seiken, AEC, Washington, D. C.
86. R. W. Shivers, AEC, Washington, D. C.
87. F. J. Skozen (Krizek), Argonne Cancer Research Hospital, Chicago
88. P. E. Smith, ARHCO, Richland, Washington
89. L. G. Stang, Jr., BNL, New York
90. G. Taplin, University of California, Los Angeles, California
91-96. D. H. Turno, SRL, Aiken, South Carolina
97. A. R. Van Dyken, AEC, Washington, D. C.
98. Laboratory and University Division
99-100. Division of Technical Information Extension