LOCKHEED MARTIN ENERGY RESEARCH LIBRARIES
3 4456 0514518 9

CENTRAL RESEARCH LIBRARY
DOCUMENT COLLECTION

OAK RIDGE NATIONAL LABORATORY
operated by
UNION CARBIDE CORPORATION • NUCLEAR DIVISION
for the
U.S. ATOMIC ENERGY COMMISSION

ORNL-TM- 3445

COPY NO. - 103

DATE - June 1, 1971

REVIEW OF THE PUERTO RICO ENERGY CENTER STUDY

John W. Michel

ABSTRACT

A study of the engineering and economic feasibility of building and operating a nuclear-powered energy center in Puerto Rico was undertaken in June 1969, by Burns and Roe, Inc., and the Dow Chemical Co. This study was jointly sponsored by the U.S. Government and the Commonwealth of Puerto Rico, and was completed in July 1970. This paper, which summarizes the results of this work discussing the various sectors studied including power and water, industry, agriculture, socio-economic and implementation, was prepared for presentation at the IAEA Study Group on Agro-Industrial Complexes, March 29–April 2, 1971, Vienna, Austria.

OAK RIDGE NATIONAL LABORATORY
CENTRAL RESEARCH LIBRARY
DOCUMENT COLLECTION
LIBRARY LOAN COPY
DO NOT TRANSFER TO ANOTHER PERSON
If you wish someone else to see this document, send in name with document and the library will arrange a loan.
UCN-7969
(3 3-67)

NOTICE This document contains information of a preliminary nature and was prepared primarily for internal use at the Oak Ridge National Laboratory. It is subject to revision or correction and therefore does not represent a final report.

This report was prepared as an account of work sponsored by the United States Government. Neither the United States nor the United States Atomic Energy Commission, nor any of their employees, nor any of their contractors, subcontractors, or their employees, makes any warranty, express or implied, or assumes any legal liability or responsibility for the accuracy, completeness or usefulness of any information, apparatus, product or process disclosed, or represents that its use would not infringe privately owned rights.

INTRODUCTION

A study of the engineering and economic feasibility of building and operating a nuclear-powered energy center in Puerto Rico was undertaken in June 1969, by Burns and Roe, Inc., and the Dow Chemical Co. This study was jointly sponsored by the U.S. Government (Dept. of Interior and AEC) and the Commonwealth of Puerto Rico (Puerto Rico Water Resources Authority, PRWRA, and the Puerto Rico Aqueduct and Sewer Authority, PRASA) and was completed in July 1970. The scope of work of the study was to compile and analyze information on the resources and requirements of the southwestern, southeastern, and north central coastal regions of the Commonwealth, and assess industrial and agricultural activities which in conjunction with the power and desalting plants, might comprise the energy center complex. The study was also to identify the need for any experimental, pilot or demonstration projects which would benefit the practical application of the Energy Center concept in Puerto Rico. It was hoped that such a study would help in attaining the overall goal of increasing employment of male labor by the establishment of viable industry and a revitalization of agriculture on the island.

The work completed by Burns and Roe and Dow Chemical is described in a four volume report series which includes an Executive Summary, two volumes of the main report, and a Site Supplement. The IAEA had requested that a discussion of this study be presented at their "Study Group on Agro-Industrial Complexes" (March 29 to April 2, 1971; Vienna, Austria). The AEC in turn requested that such a summary be prepared for this meeting.

SITE SELECTION AND LAYOUT

In conformity with the policy of the Puerto Rican government to diversify the island's industrial development three areas of relatively low population density were compared for use as a site for an energy center. One site in the north central region near Arecibo, one at Guayanilla in the southwest, and the Bay of Jobos (Aguirre) in the southeast region. It was determined that the Aguirre site was best suited for this type of development and three specific sites in this area were further examined before the West-Aguirre site was selected. This area was recommended primarily on the following basis:

1. Availability of suitable land at the lowest cost to acquire and develop.

2. Indicated acceptability of the site from a nuclear safety standpoint by virtue of a good rock foundation for the reactors, adequate exclusion radius and low density population zones around the power plant.

3. The availability on the power plant site of two 460 MWe fossil plants scheduled for operation in 1973-74 and a 560 MWe nuclear plant scheduled for 1976 and could provide backup power and steam. The length of all steam lines was therefore minimized.

LOCKHEED MARTIN ENERGY RESEARCH LIBRARIES

3 4456 0514518 9

4. Good possibilities for a deep water port development.

5. Site layout lends itself to staged development thus reducing initial costs.

6. Good highways to serve the area which will help to diffuse the socio-economic impact of the Energy Center over a large area of Puerto Rico and supply labor needed for construction and operation.

7. Relative stability of ecological factors.

8. The greater potential need for water from a desalting plant that affords an opportunity to help solve water problems of the south coast of Puerto Rico and to recover salt economically from brine waste.

The costs to develop this site were estimated as indicated in Table 1.

Table 1. Cost Breakdown of Energy Center Site Development (In Thousands of Dollars)

Capital Costs	
Cost of Land	$10,700
Cost of Expropriated Houses	1,816
Site Preparation	
(1) Levees & Flood Protection	1,844
(2) Land Filling & Compaction	723
Harbor & Channels[c]	16,134
Power Plant	1,626
	$32,793
Capitalized Operating Cost	
Water - Alternate A[a]	21,500
TOTAL COST (Alternate A)	$54,293
Water - Alternate B[b]	38,200
TOTAL COST (Alternate B)	$70,993

[a]Alternate A - Industrial water supplied by PRASA at an assumed rate of 28¢/10^3 gallons.

[b]Alternate B - Industrial water supplied by desalting plant at 50¢/10^3 gallons.

[c]Capable of handling vessels up to 1100' in length and requiring 65' of water with entrance channels to harbor 400' minimum width.

The particular site selected is currently used for raising sugarcane. A portion of the land adjoining the Bay is underlain with rock which provides a desirable reactor site from seismic design considerations.

The average rainfall in the area is about 42 inches per year. The prevailing wind is from the east. The area has brief temperature inversion in the morning and evening, but they never persist throughout the day. The average annual air temperature is 80°F. Tides normally run about one to two feet, but could reach fifteen feet above mean sea level in a maximum intensity hurricane striking directly on the area.

The power plant area at this site could ultimately include four fossil fired power plants and four nuclear units. Construction is under way on two 460 MWe fossil fired power plants. PRWRA has announced that a nominal 560 MWe nuclear power plant will be built at this site to go into operation in 1976. The second nuclear plant position could be the Energy Center dual purpose power plant to go into operation in 1978.

The industrial area consists of a rectangular plot of 2400 acres of land slightly sloped toward the sea. The plot would be graded into a series of terraces conforming to the general contours of the land and set at elevations of 5, 10, 15, 20 and 35 feet above mean sea level. To protect the lower levels from the 15 foot tide that is possible during a major hurricane, an 18 foot high levee would be placed on the seaward side.

The industrial plants presently planned for inclusion in the Energy Center would occupy the approximately 1,300 acres in the south portion of the plot. A demonstration farm could be located in the northern half of the plot which could later serve as an industrial expansion area.

The final plant layout shown in Fig. 1 has taken into account five interrelationships for each plant, namely (1) with other plants, (2) with the power plant, (3) with the harbor, (4) with the project schedule and (5) with the possible plant ownership.

The harbor facilities for the Energy Center have been located in the southwest corner of the site to take advantage of the naturally occurring water depths to minimize dredging and have good deep water access to the sea and yet keeping it within the barrier reef islands to afford protection against swells and heavy seas.

Berthing facilities would be provided to accommodate three classes of vessels as follows:

a. Barges of 10,750 short ton capacity with an overall length of 350 feet and a required water depth of 22 feet.

b. Multiproduct chemical tankers of 40,000 short ton capacity with a length of 680 feet and a required water depth of 40 feet.

c. Oil tankers of 150,000 dead weight ton capacity with an overall length of 990 feet and a required water depth of 65 feet.

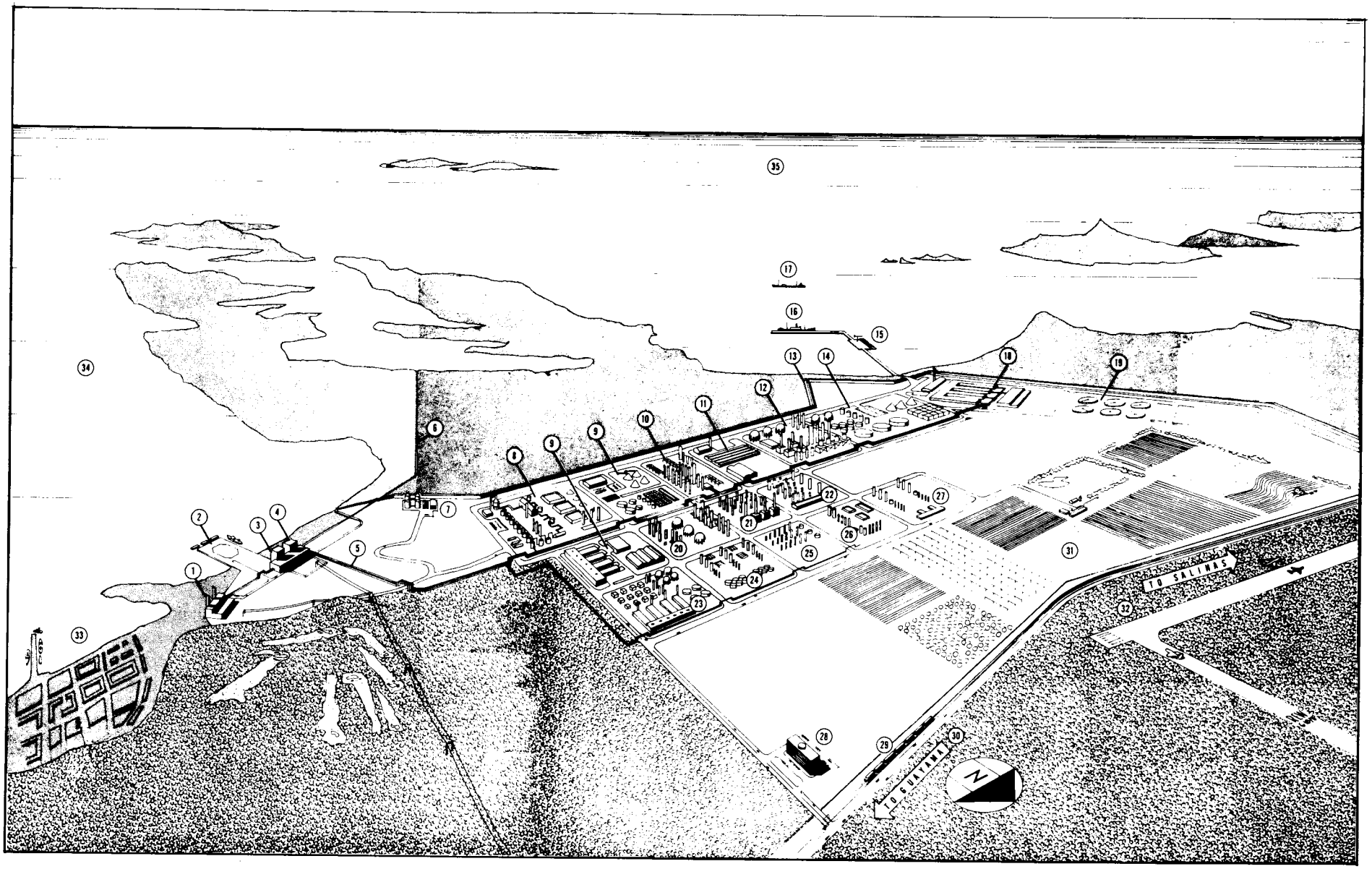

Fig. 1. PUERTO RICO ENERGY CENTER

KEY

1 1973 74 460 MW FOSSIL POWER PLANT
2 FUEL OIL BARGE UNLOADING
3 1976 570 MW NUCLEAR POWER PLANT
4 1978 DUAL PURPOSE NUCLEAR POWER PLANT
5 STEAM LINES
6 COOLING WATER EFFLUENT CANAL
7 20 MGD DESALTING PLANT
8 SALT RECOVERY PLANT
9 MAINTENANCE & SUPPLY AREA
10 REFINERY
11 UTILITIES
12 POLYETHYLENE
13 LEVEE
14 STORAGE
15 BARGE WHARF
16 CHEMICAL TANKER DOCK
17 CRUDE OIL UNLOADING
18 ALUMINUM PLANT
19 WASTE DISPOSAL
20 CUMENE
21 ETHYLENE
22 EHTYLBENZENE
23 CHLORINE CAUSTIC
24 PROPYLENE GLYCOL
25 ETHYLENE DICHLORIDE
26 ETHYLENE GLYCOL
27 ETHYLENE OXIDE
28 ADMINISTRATION BUILDING
29 PONCE GUAYAMA RAILROAD
30 HIGHWAY NO 3
31 DEMONSTRATION FARM
32 EXISTING AIRPORT
33 CENTRAL AGUIRRE
34 BAY OF JOBOS
35 CARIBBEAN SEA

PUERTO RICO NUPLEX STUDY PERSP

ENERGY SEGMENT

The Energy Center uses energy in the form of electrical power and steam which would buildup over an eight year period to reach peak estimated loads as follows:

Electrical Power		700 megawatts
Process Steam		
400 psig	-	400,000 pounds per hour
150 psig	-	3,000,000 pounds per hour
40 psig	-	1,600,000 pounds per hour

It is proposed that the power and steam be furnished to industry from plants owned and operated by the PRWRA to obtain the benefit of their low financing charges as well as backup for electrical power from the grid and backup for steam from other power plants located at the site.

Preliminary studies compared the cost for producing electrical power in single purpose plants and indicated that nuclear power generation costs (4.34 mills per kilowatt-hour @ 8% fixed charge rate) are slightly lower than fossil power costs (4.44 mills per kilowatt-hour) based on 1969 costs. The data does not take into account escalation for either plant or the possible need for sulphur removal from the stack gas of the fossil plant.

Six alternate cases were studied to determine the most economical method of obtaining the required electrical power and steam from dual purpose plants. These cases varied the number and size of reactors and compared nuclear with a dual purpose fossil power plant. Where the amount of power generated by the dual purpose plant exceeded or fell short of that required by the Energy Center, it was assumed that the difference would be furnished to or obtained from the power grid system. In addition, the power grid system firms the power by furnishing the backup power during emergencies or planned outages.

The steam supply to the industrial plants of the Energy Center must have a high degree of reliability just the same as the electrical power supply system. Since nuclear reactors must be shut down approximately once a year for refueling, the reactors must either be furnished in duplicate to achieve a continuous steam supply or else steam must be obtained from other sources. Three other possible sources of steam could be obtained at this site, namely package boilers, the two 460 Mw fossil plants scheduled for operation in 1973 and 1974 and the single purpose nuclear power plant scheduled for operation in 1976.

The lowest steam cost was obtained from a two reactor plant (1750 MWe, ea) producing 771 MWe (gross) although the capital investment was 30% above that of a single 2785 MWt reactor producing 539 MWe. Since the cost of steam (based on the power credit method from a single purpose plant) was only about 2% greater for the latter case, it was recommended for this application to minimize financing problems. A schematic diagram for the recommended case is shown in Fig. 2 along with the projected steam costs. Apportionment

ORNL-DWG 71-2976

CASE III

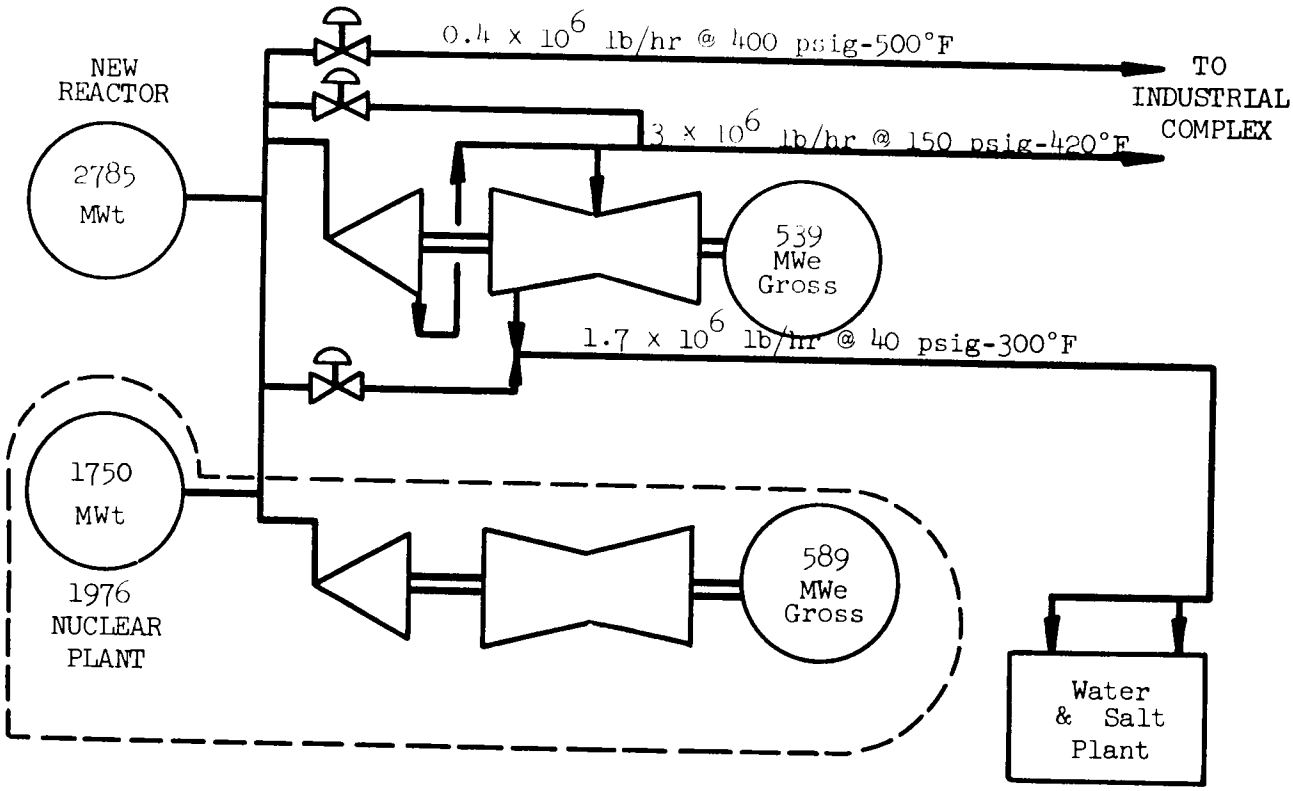

Steam Costs
Cents Per 1000 Lbs

Steam Pressure, psig	Cost at Dual Purpose Plant Boundary	Delivered Cost Including Standby System	Levelized Cost Over Lifetime
400	23.5	27.3	29.1
150	19.9	23.0	25.8
40	14.0	15.7	16.3

Fig. 2. Dual Purpose Power Plant With Backup Steam From 1976 Nuclear Plant

between the various steam pressures was made according to the available energies obtained by multiplying the theoretical steam rates by the appropriate steam flows.

The savings for the dual purpose nuclear plant compared to a dual purpose fossil plant is about $3,000,000 per year. This may be contrasted with the savings of single purpose nuclear compared to single purpose fossil of 0.1 mill per kilowatt-hour which corresponds to $490,000 per year. The increased advantage of the dual purpose nuclear plant comes in part from a larger unit, but primarily from the lower energy cost of nuclear fuel.

Based on the recommended case, a complete heat balance was developed to serve as a basis for preparing a detailed capital cost for the plant which gave an estimated capital cost as of June 1969, of $161,203,000. With escalation, this cost would be about $196,800,000 by the time the plant was completed in 1978 if current escalation trends continue.

The estimated steam costs, ranging from 16.3 to 32.3¢ per 1,000 pounds, are expected to be attractive to industry since it is not uncommon for industry to pay 50 to 75 cents per 1,000 pounds for steam. The lower unit costs for the Energy Center could represent a savings in the range of $10,000,000 per year. This savings is in part due to the ownership of the power plant by a governmental agency, which results in lower fixed charges.

The location of a large complex of power plants at Aguirre could have significant environmental effect on the Bay of Jobos due to use of this water for cooling purposes. It was recommended that a study be made of the effects of the discharge from such plants into the Bay and the immediate aquatic region.

WATER SEGMENT

An analysis made of the projected water needs for the sub-region which included the proposed energy center site indicated that serious water shortages could exist up to about 1990. At this time the second stage of the Toa Vaca reservoir-canal project should be completed and could provide 33 MGD. Some of the water shortages could be met by additional development of wells but the remaining shortage would have to be met by desalting plants.

Two bases on which the desalting plant can be sized were studied; one designed to recover enough salt from the waste brine of the desalting plant to supply the chlorine-caustic plant, i.e., 3,000 tons of salt per day. The second basis was to just satisfy the water needs of the Sub-Region including the Energy Center and import all the salt needed for the chlorine-caustic plant. The water supplied on the two bases can be summarized as follows:

Water Source	Salt Basis	Water Basis
Desalt Plant	20.0 mgd	15.0 mgd
Salt Recovery Plant	8.3 mgd	---
Chlorine-Caustic Plant	1.4 mgd	1.4 mgd
West Aguirre Wells	4.0 mgd	4.0 mgd
Toa Vaca	---	6.4 mgd
Total	33.7 mgd	26.8 mgd

Sizing the desalting plant on the basis of meeting the salt needs results in a surplus of 6.9 mgd of water which would be available to the Sub-Region outside of the Energy Center. Sizing to satisfy salt needs makes the Energy Center independent of the Toa Vaca Project and the surplus of water might make it desirable to delay the delivery of water from Toa Vaca. Based on satisfying the water needs, a plant of 15 mgd going into operation in 1974 would take care of the demand until 1985. This solution makes the Energy Center dependent on receiving water from Toa Vaca.

It was decided to evaluate the desalting plant on the basis of supplying the salt needs, i.e., a 20 mgd plant. This was arranged in two 10 mgd trains to give redundancy to reduce the chances of the total water supply being interrupted. The desalting plant is backed up by an underground reservoir with well capacity of 22 mgd to serve as an emergency supply. It is estimated that mining this underground reservoir could meet the water needs of the Energy Center for a period of one month.

DESALTING PLANTS

Five different desalting plant designs were evaluated as summarized in Table 2. Two multistage flash distillation plants were considered, one with a single-effect and the other with two effects. The single-effect multistage plant (SEMS or MSF) while not capable of producing a brine at a concentration factor of 3[1] using only acid pretreatment was primarily included to serve as a point of reference on desalted water costs. The multi-effect multistage flash distillation plant (MEMS) is similar to the SEMS except 2 effects are used and it can produce a brine of 3 times sea water concentration because the higher brine concentration occurs in the lower temperature effect. Fouling of heat transfer surfaces by invertly soluble calcium sulfate, is thus minimized.

Three multi-effect evaporators using vertical tubes with falling film evaporation were considered based on concepts developed by the Oak Ridge National Laboratory (ORNL), Aerojet-General (A-G) and W. L. Badger, Inc. (WLB).

---

[1] If salt is to be recovered from the waste brine, a concentration factor of 3 was deemed to be desirable.

Table 2. Comparison of 20 Mgd Desalting Plants

	MULTISTAGE FLASH		M E V T E		
	SEMS	MEMS	ORNL	WLB	A-G
Effects	1	2	11	16	12
Performance Ratio	10.0	9.0	9.6	12.0	9.6
Capital-$ Millions	20.0	20.6	16.9	19.0	15.4
Annual Cost-$ Millions	3.2	3.3	2.9	2.8	2.8
Cost of Water-¢/k gal.	52	53	47	44	45

The ORNL and Aerojet-General designs use multistage flash preheaters (MSF). The W. L. Badger arranges the effects in two vertical towers. All the designs use enhanced heat transfer surface (fluted tubes) in the vertical tube evaporators.

The annual cost data was based on the fixed charge rate of capital of 7.835%, the use of extraction steam from the dual purpose nuclear power plant at 20¢ per million Btu, electrical power at 5 mills per kilowatt-hour and an on-stream efficiency of 85%.

The cost data given in Table 2 indicates that the multi-effect vertical tube plants all produce water at lower costs than the multistage flash distillation plants. A waste brine stream at three times sea water concentration can be obtained from the VTE plants at no cost penalty to the production of water. Increasing the on-stream efficiency from 85 to 90% would lower the cost of water about 1 cent per thousand gallons. Reducing the plant capacity to 10 mgd increases the unit cost of water to 57 cents per thousand gallons for a SEMS plant and 49.9 cents per thousand gallons for the ORNL MEVTE plant.

Four seawater pretreatment processes were evaluated in detail, namely, acid, caustic, lime-magnesium carbonate (LMC) and ion exchange. The barium desulfating process was given preliminary consideration but was eliminated on the basis of unfavorable economics in the size range of interest in this case. This evaluation indicated that the acid process gave the lowest cost (4.3¢/1000 gal.) however, the caustic process was only slightly more costly and might be competitive depending on the ratio of acid to caustic costs in specific instances.

INDUSTRIAL SEGMENT

Establishment of the Industrial Complex

The industrial segment of the study evaluated a group of potential product modules with the objective of assembling them into an interrelated, viable production complex. A prospective list of plants and products of the most likely candidates were:

- Chemical Refinery
- Ethylene
- Ethylbenzene
- Cumene
- Propylene Glycol
- Chlorine-Caustic
- Ethylene Dichloride
- Ethylene Glycol
- Petroleum Coke
- Polyethylene
- Vinylchloride
- Aluminum
- Magnesium
- Silicon Metal
- Copper Refining
- Electric Furnace Iron
- Hydrogen & Ammonia
- Salt By Solar Evaporation
- Salt By Steam Evaporation
- Magnesium Hydroxide
- Hypochlorite
- Elemental Phosphorus
- Phosphoric Acid (Wet Process)
- Heavy Water
- Fuel Processing

Each module selected for inclusion in the industrial segment was tested against the following criteria:

a. Is there a market position for this product during the 1975-1990 study period?

b. Can it be profitably manufactured for this market during this period?

c. Is the indicated profitability such that it can probably stand the test of competition with other manufacturing locations?

d. Do pollution or other factors make it unsatisfactory for Puerto Rico?

e. Are there plans for the same or a similar product for Puerto Rico which might predate construction of this plant?

f. Can derivative products be manufactured so that additional jobs may be created?

In addition, potential product modules were considered in light of the advantages that Puerto Rico could offer.

The economics of the potential products were screened and after the products were identified as being candidates for the industrial segment, it was necessary to size them so that: (1) raw materials were in balance, (2) the plant size is compatible with projected technology, and (3) the plant capacity makes business sense for the 1975-1990 period.

It was necessary to forecast the size of operation for these years which could economically fit into the market picture without disrupting the price structure and which would be feasible to build in the light of competitive efficiency and construction technology.

Using the above criteria several trial industrial complexes were evaluated and the results are summarized in Table 3. The product mix recommended, Case III-A is listed in Table 4 along with the power and steam requirements for each product and the total complex. The size of each plant and pertinent economic data is summarized in Table 5.

Although considerable attention was given to the question of disposal of thermal and chemical wastes, recommendation for additional more detailed studies were made in several cases. Waste control facilities were provided for liquid, solid, and gaseous wastes from the industrial plants. The chemical refinery, and the petro-chemicals group, discharge organic wastes either dissolved or suspended in water. A bioxidation process treatment plant was provided to reduce the total oxygen demand of this waste water by 85%. Some of the plants produce wastes that will be disposed of in a tar burner and scrubber. In addition, incinerators are provided for the disposal of combustible wastes

Table 3. Summary of Economics Data for the Industrial Sector in Five Energy Center Cases

	Case I	Case II	Case III	Case III-A	Case III-B
Total Fixed Investment (millions of dollars)	258.0	414.1	468.2	460.4	452.0
Working Capital (millions of dollars)	31.8	45.0	56.7	57.4	57.4
Total Annual Sales (millions of dollars)	130.8	249.5	272.7	273.3	273.3
Total Annual Costs (millions of dollars)	100.9	174.4	180.7	181.9	181.5
Discounted Cash Flow %	10.2	14.0	14.0	15.4	15.4

Note: The differences between cases III-A and III-B was that Case III-A included a plant for the recovery of salt from the brine effluent of a desalting plant used to produce industrial water, while in Case III-B, the salt was purchased and industrial water was to be supplied from sources outside the Energy Center.

Table 4. Puerto Rico Energy Center
Power and Steam Requirements

Product[a]	Power MWe	Steam, 10^3 lbs/hr		
		40 psig (300°F)	150 psig (420°F)	400 psig (500°F)
Refinery	23		421	
Petrochemicals	90		1570	338
Propolyene Glycol			670	120
Polyethylene			455	27
Ethylene Glycol			255	191
Others			190	
Caustic-Chlorine	180		588	
Aluminum	233		--	
Salt Recovery	~ 2	870	--	--
Site Utilities	66		6	
Contingency Allowance	116	170	415	62
Desalting Plant		660		
Totals	700	1700	3000	738

[a]Calcined coke made from residual fuel oil available as a refinery byproduct was subsequently recommended for inclusion into the complex since it gave a DCF of 16%.

Table 5. Size, Investment and Rate of Return for the Puerto Rican Energy Center

Product	Capacity 10^6 lb/yr	Battery Limits Investment 10^6 \$	Net Selling Price ¢/lb	Discounted Cash Flow %
Refinery	6046	53.7		
Benzene	1324			
Ethylene	1262	57.0		
Propylene	692			
Chlorine	1007	24.8		
Caustic	1058		1.25	14
Ethylbenzene	1000	5.0	3.78	16
Cumene	802	4.9	3.78	18
Ethylene Dichloride	425	2.9	2.45	13
Ethylene Glycol	725	36.0	5.00	18
Propylene Glycol	525	18.8	8.66	18
H.D. Polyethylene	300	46.9	11.93	14
Salt Recovery	2070	7.6		
Aluminum	280	92.1	26.46	14
		350		15.4 (ave.)
Storage & Pollution Control		16		
Interest during Construction		33		
Site, harbor, docks, etc.		78		
		477		
Dual Purpose Nuclear Plant		162		
20 MGD Desalting Plant		17	Total Investment = \$656 x 10^6	

without pollution. The chlorine and aluminum plants will produce solid wastes that will be disposed of by land filling. The aluminum plant will provide fume scrubbing for the anode gas to remove gaseous fluorine compounds and dust particles consisting mainly of fluorides, alumina and carbon. Pot room air is exhausted through a spray chamber.

Of the prospective products (or process plant) listed above, all except silicon metal were evaluated and then dropped from consideration for a variety of reasons.

An analysis was made of the sensitivity in the computed DCF percentage as a function of some of the basic assumptions used in performing this study. The results summarized in Table 6 indicate that the tax incentive policy, i.e., U.S. federal income taxes are not paid for time periods up to 17 years, is the prime reason for obtaining an economically attractive DCF in this case. The assumption of obtaining a favorable oil import position produced about one-half the effect of income tax forgiveness.

AGRICULTURAL SEGMENT

The economics of growing selected crops on the South Coast of Puerto Rico using desalted water (for supplement) at various costs were computed and the results shown in Fig. 3. These results are based on a 500 acre fully mechanized farm, with equipment operators paid $1.75 per hour and field labor $1.25 per hour with a 50% allowance for fringe and social benefits. The net earnings shown are based on land rental at $120 per acre.

Crop market analysis data obtained for the year 1968 and projected to 1975 showed that fruits and vegetables which could be grown in Puerto Rico and valued at $\$20 \times 10^6$ would be imported. In addition, sizeable markets for these crops would exist in the larger east coast cities on the United States mainland. To demonstrate the probable benefits of diversifying land from sugarcane to raise these fruits and vegetables, a 500 acre commercial farm was designed and evaluated. The resulting computed discounted cash flow percentages were sensitive to the assumed land and water costs. As an illustration, if the water cost 10¢ per thousand gallons and land cost $1,000 per acre, then the discounted cash flow is about 14%. At this same land cost but water at 45¢/1000 gal the DCF is 9-1/2% but with land at $3000/acre the DCF drops to 4%.

IMPACT OF THE ENERGY CENTER

The employment resulting from the establishment of the proposed energy center is summarized in Table 7. Also shown are some of the pertinent economic parameters which would be influenced by this project. Subsequent to the completion of this study an estimate of the impact on the entire island's economy was made using a ten sector input-output table.[1] The results of this analysis shown in Table 8 indicate that the induced overall employment is over two times greater than the regional figure given in Table 7. Further,

---

[1] John M. Holmes, The Impact of Nuclear Energy Centers on the Economy of Puerto Rico, a Ph.D. dissertation, the University of Tennessee, Dept. of Chemical and Metallurgical Engineering, Knoxville, Tennessee, July 1970.

ORNL-DWG-71-2619

Table 6. Sensitivity Analysis for Puerto Rico Energy Center

Change in Assumption	Change in DCF %
Tax Incentive Omitted	-5
Import Oil Quota not Obtained (increase crude price 37 to 55%)[a]	-2 to -3
Increase Power Rate by 1 mill/kwhr	-1
Steam Supply from Fossil-Boilers	-0.7 to -1
No Deep Harbor	-0.5
Increase Land Cost from $4000/Ac to $12,000/Ac	-0.5

[a]Crude oil cost used in the analysis was $1.75/bbl + 0.42/bbl freight.

ORNL-DWG-71-2626

Table 7. Impact of Puerto Rico Energy Center

Employment	
Construction	5,000
Operation	4,000
Derived (secondary in the Region)	12,600
Supported Population in the Region	50,000
Economic	
Personal Expenditures	$\$54 \times 10^6$
Energy Center Purchases	$\$35 \times 10^6$
Community Investment Needs (1980)	$\$300\text{-}400 \times 10^6$

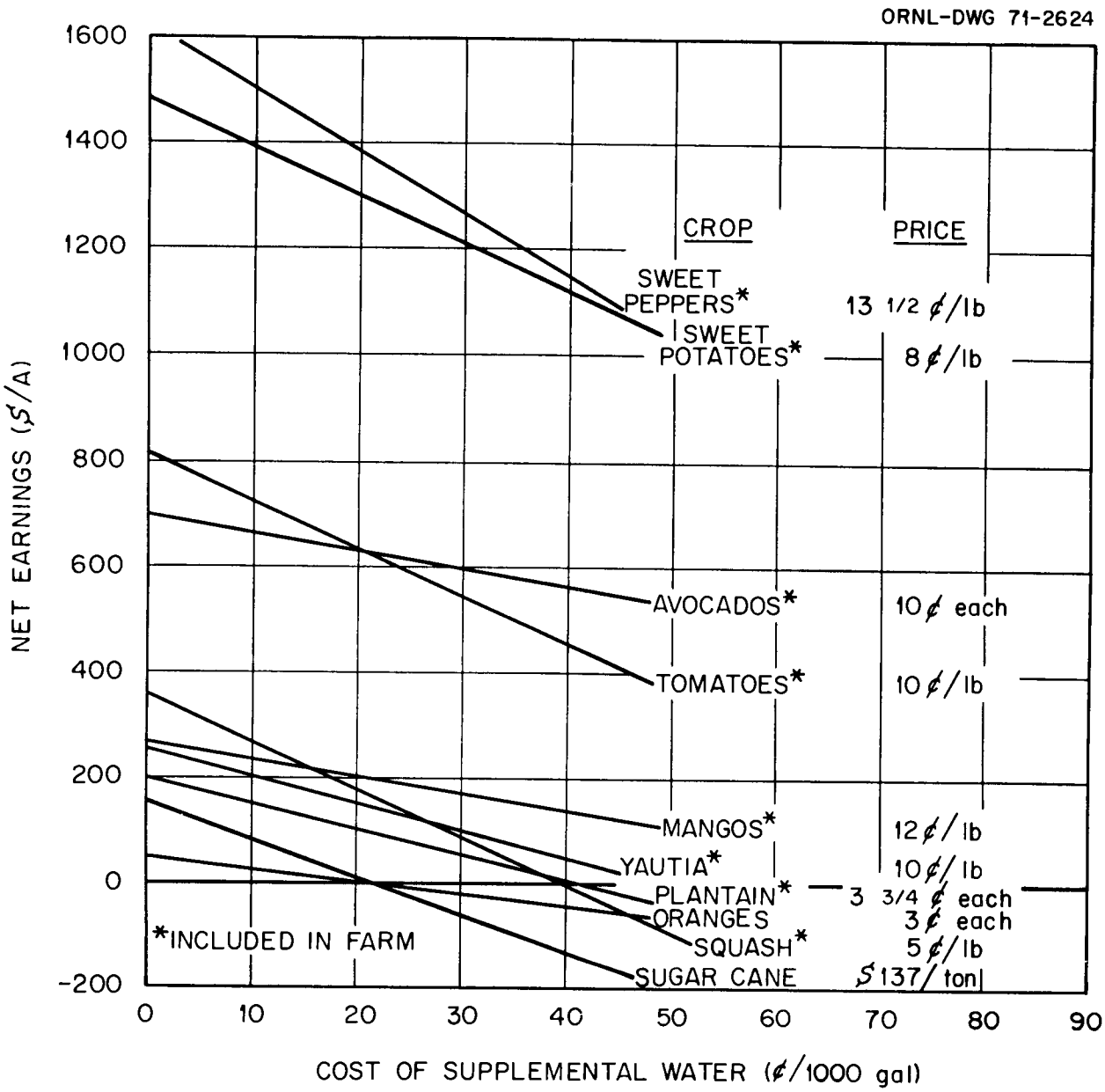

Fig. 3. PUERTO RICO ENERGY CENTER STUDY
AGRICULTURAL CROP ECONOMICS

Table 8. Summary of the Impact Due to the Establishment of an Energy Center In Puerto Rico

	Short Term Impact	Long Term Impact
Energy Center Employment	2900	4200
Direct Plus Indirect Employment*	4020	5730
Total Increase In Puerto Rican Employment*	6400	27,300
Increase in Gross Product, $ millions (1975 dollars)	185	841
Percent Increase in Gross Product	2.3	10.6
Capital Requirements For the Public Sector, $ millions (1975 dollars)		
Public Services		412.5
Government		106.5
Total		519.0

*Includes Energy Center employment.

it is of interest to note that according to this analysis this project would over the long term result in a 10.6% increase in the gross domestic product for the island and require governmental expenditures of about $519 x 10^6 including the costs for the power and water plants associated with the complex.

IMPLEMENTATION

A proposed project construction schedule was developed which would require about 8 years to complete. This schedule limits the capital expenditures to about $100,000,000 per year and construction manpower to a maximum of about 4000 to 5000 men per year. The nature of the plants is such that the development of the project can proceed in six stages, each of which represents a plateau of stability and a basis for lengthening the project schedule if necessary.

The promotion of the Energy Center can be handled by Fomento, acting for the various governmental agencies of Puerto Rico in a role they have successfully filled in the past in connection with the industrialization program of Puerto Rico. The establishment of contracts between the governmental agencies and industry, will be the basis for the governmental agencies to raise money for their portion of the project through the issuance of bonds. The government agencies would finance the purchase of the land and its improvements, the dual purpose power plant, the desalting plant and harbor facilities. Industry on the basis of the same contracts and the indicated profits would raise money for financing the industrial plants. The exact location of the interface between the governmental agencies and industry and the degree of risk to be assumed by each are matters to be worked out during negotiations and will be dependent in part on the organization plan that is adopted.

Four organization plans for the Energy Center were developed, three of which were recommended as applicable.

CONCLUSIONS AND RECOMMENDATIONS

The main conclusions reached from performing this one year study of a nuclear-powered energy center in Puerto Rico may be summarized as follows:

(1) An Energy Center is economically viable in Puerto Rico. In particular, the industrial complex, as recommended, yields an acceptable discounted cash flow percentage using the forecasted near term (1975-90) domestic USA and worldwide market structure.

(2) The economic viability of the industrial plants of the Energy Center derives from the benefits of the Puerto Rican tax incentive program and the assumption of obtaining an oil import quota, i.e., relatively low cost crude oil. Other significant benefits do accrue, however, from low cost power and steam, large capacity plants, complexing and availability of a deep water harbor and low land costs.

(3) Recovery of salt from the desalting plants waste brine is an attractive alternative to importing solar salt for the caustic/chlorine plant. Recovery of other products from this source will require an additional R & D effort.

(4) The most economical way of obtaining the steam and the bulk of the power required for the Energy Center is from a 2785 MWt nuclear steam supply system with a 540 MWe turbo-generator. The cost of generating power from single purpose nuclear plants is slightly lower than fossil plants. The estimated cost of generation from both type of plants exceeds the present rate schedule for large blocks of power.

(5) The proposed industrial development of this Sub-Region will result in a water shortage requiring construction of desalting facilities. Desalted water can be obtained at lowest cost from a multi-effect vertical tube type plant in the 20 MGD plant size range. The VTE type of desalting plant can produce a waste brine at three times seawater concentration that can be used for the economical recovery of salt at no cost penalty to water production.

(6) Food produce is being imported to Puerto Rico which could be profitably grown in Puerto Rico. By 1975, these imports will reach $20 million per year unless production of certain crops is increased. It will require 20,000 acres of land to grow the crops needed to meet the demand and this amount of land can only be obtained by displacing sugarcane.

(7) With the exception of selected crops, the cost of desalted water is too high to be used for agriculture in Puerto Rico.

(8) Implementation of the Energy Center is possible through existing agencies of the Government of Puerto Rico. About one-third of the Energy Center cost can be financed by agencies of the Government of Puerto Rico through bond issues covering the dual purpose power plant, the desalting plant, land acquisition and port facilities. The profit potential is sufficiently high to induce private industry to finance the remaining two-thirds of the cost.

it is of interest to note that according to this analysis this project would over the long term result in a 10.6% increase in the gross domestic product for the island and require governmental expenditures of about $519 x 10^6 including the costs for the power and water plants associated with the complex.

IMPLEMENTATION

A proposed project construction schedule was developed which would require about 8 years to complete. This schedule limits the capital expenditures to about $100,000,000 per year and construction manpower to a maximum of about 4000 to 5000 men per year. The nature of the plants is such that the development of the project can proceed in six stages, each of which represents a plateau of stability and a basis for lengthening the project schedule if necessary.

The promotion of the Energy Center can be handled by Fomento, acting for the various governmental agencies of Puerto Rico in a role they have successfully filled in the past in connection with the industrialization program of Puerto Rico. The establishment of contracts between the governmental agencies and industry, will be the basis for the governmental agencies to raise money for their portion of the project through the issuance of bonds. The government agencies would finance the purchase of the land and its improvements, the dual purpose power plant, the desalting plant and harbor facilities. Industry on the basis of the same contracts and the indicated profits would raise money for financing the industrial plants. The exact location of the interface between the governmental agencies and industry and the degree of risk to be assumed by each are matters to be worked out during negotiations and will be dependent in part on the organization plan that is adopted.

Four organization plans for the Energy Center were developed, three of which were recommended as applicable.

CONCLUSIONS AND RECOMMENDATIONS

The main conclusions reached from performing this one year study of a nuclear-powered energy center in Puerto Rico may be summarized as follows:

(1) An Energy Center is economically viable in Puerto Rico. In particular, the industrial complex, as recommended, yields an acceptable discounted cash flow percentage using the forecasted near term (1975-90) domestic USA and worldwide market structure.

(2) The economic viability of the industrial plants of the Energy Center derives from the benefits of the Puerto Rican tax incentive program and the assumption of obtaining an oil import quota, i.e., relatively low cost crude oil. Other significant benefits do accrue, however, from low cost power and steam, large capacity plants, complexing and availability of a deep water harbor and low land costs.

(3) Recovery of salt from the desalting plants waste brine is an attractive alternative to importing solar salt for the caustic/chlorine plant. Recovery of other products from this source will require an additional R & D effort.

(4) The most economical way of obtaining the steam and the bulk of the power required for the Energy Center is from a 2785 MWt nuclear steam supply system with a 540 MWe turbo-generator. The cost of generating power from single purpose nuclear plants is slightly lower than fossil plants. The estimated cost of generation from both type of plants exceeds the present rate schedule for large blocks of power.

(5) The proposed industrial development of this Sub-Region will result in a water shortage requiring construction of desalting facilities. Desalted water can be obtained at lowest cost from a multi-effect vertical tube type plant in the 20 MGD plant size range. The VTE type of desalting plant can produce a waste brine at three times seawater concentration that can be used for the economical recovery of salt at no cost penalty to water production.

(6) Food produce is being imported to Puerto Rico which could be profitably grown in Puerto Rico. By 1975, these imports will reach $20 million per year unless production of certain crops is increased. It will require 20,000 acres of land to grow the crops needed to meet the demand and this amount of land can only be obtained by displacing sugarcane.

(7) With the exception of selected crops, the cost of desalted water is too high to be used for agriculture in Puerto Rico.

(8) Implementation of the Energy Center is possible through existing agencies of the Government of Puerto Rico. About one-third of the Energy Center cost can be financed by agencies of the Government of Puerto Rico through bond issues covering the dual purpose power plant, the desalting plant, land acquisition and port facilities. The profit potential is sufficiently high to induce private industry to finance the remaining two-thirds of the cost.

(9) The first plants can be placed in operation by 1975 and the last of the plants by 1979, if construction can be started by 1972.

(10) The impact of implementing the recommended Energy Center on the Puerto Rican economy would be most evident in the creation of new jobs; over 4000 in the energy center and an estimated additional 23,000 indirect and inferred for the entire island.

Internal Distribution

1. L. G. Alexander
2. T. D. Anderson
3. S. J. Ball
4. S. E. Beall
5. R. E. Blanco
6. H. I. Bowers
7. R. B. Briggs
8. C. C. Burwell
9. R. S. Carlsmith
10. L. D. Chapman
11. T. E. Cole
12. W. B. Cottrell
13. F. L. Culler
14. R. A. Ebel (K-25)
15. D. M. Eissenberg
16. J. L. English
17. D. E. Ferguson
18. A. P. Fraas
19. H. E. Goeller
20-44. R. P. Hammond
45. J. W. Hill
46. E. C. Hise
47. H. W. Hoffman
48. J. M. Holmes
49. K. O. Johnsson
50. J. E. Jones
51. P. R. Kasten
52. F. Kertesz
53. K. A. Kraus
54. S. A. Levin
55. M. I. Lundin
56. R. N. Lyon
57. R. E. MacPherson
58. H. C. McCurdy
59-79. J. W. Michel
80. A. J. Miller
81. J. E. Mrochek
82. J. C. Moyers
83. Claire Nader
84. H. M. Noritake (K-25)
85. J. A. Parsons
86. H. R. Payne
87. A. M. Perry
88. S. A. Reed
89. M. W. Rosenthal
90. A. W. Savolainen
91. M. J. Skinner
92. I. Spiewak
93. D. A. Sundberg
94. T. Tamura
95. W. E. Thompson
96. D. B. Trauger
97. R. Van Winkle
98. A. M. Weinberg
99. G. D. Whitman
100. R. P. Wichner
101. W. C. Yee
102. Gale Young
103-104. Central Research Library
105. Y-12 Document Reference Section
106-108. Lab Records Department
109. Lab Records Department - RC

External Distribution

AEC-Washington

110. Director, RDT
111. Assistant Director for Project Management, RDT
112-113. Chief, Desalting Branch, RDT
114. Assistant Director for Plant Engineering, RDT
115. Assistant Director for Reactor Engineering, RDT
116. Assistant Director for Nuclear Safety, RDT
117. Assistant Director for Engineering Standards, RDT
118. Assistant Director for Program Analysis, RDT
119. Assistant Director for Army Reactors, RDT

External Distribution, continued

AEC-ORO

120. Senior Site Representative, ORNL
121. Laboratory and University Division

U.S. Department of the Interior - OSW

122-123. Director, Office of Saline Water
124-125. Chief, Distillation Division
126. Chief, Desalting Feasibility and Economic Studies

Other

127-128. Division of Technical Information Extension, OR