LOCKHEED MARTIN ENERGY RESEARCH LIBRARIES
3 4456 0514523 2

CENTRAL RESEARCH LIBRARY
DOCUMENT COLLECTION

OAK RIDGE NATIONAL LABORATORY
operated by
UNION CARBIDE CORPORATION • NUCLEAR DIVISION
for the
U. S. ATOMIC ENERGY COMMISSION

ORNL - TM - 3461

RADIOISOTOPE PROGRAM (8000) PROGRESS REPORT FOR MAY 1971

A. F. Rupp

OAK RIDGE NATIONAL LABORATORY
CENTRAL RESEARCH LIBRARY
DOCUMENT COLLECTION
LIBRARY LOAN COPY
DO NOT TRANSFER TO ANOTHER PERSON
If you wish someone else to see this document, send in name with document and the library will arrange a loan.
UCN-7969
(3 3-67)

NOTICE This document contains information of a preliminary nature and was prepared primarily for internal use at the Oak Ridge National Laboratory. It is subject to revision or correction and therefore does not represent a final report.

This report was prepared as an account of work sponsored by the United States Government. Neither the United States nor the United States Atomic Energy Commission, nor any of their employees, nor any of their contractors, subcontractors, or their employees, makes any warranty, express or implied, or assumes any legal liability or responsibility for the accuracy, completeness or usefulness of any information, apparatus, product or process disclosed, or represents that its use would not infringe privately owned rights.

ORNL-TM-3461

Contract No. W-7405-eng-26

Isotopes Development Center

RADIOISOTOPE PROGRAM (8000) PROGRESS REPORT FOR MAY 1971

A. F. Rupp

Work Sponsored by
AEC Division of Isotopes Development

JUNE 1971

OAK RIDGE NATIONAL LABORATORY
Oak Ridge, Tennessee
operated by
UNION CARBIDE CORPORATION
for the
U.S. ATOMIC ENERGY COMMISSION

LOCKHEED MARTIN ENERGY RESEARCH LIBRARIES

3 4456 0514523 2

CONTENTS

Page

RADIOISOTOPE PRODUCTION AND MATERIALS DEVELOPMENT 1

REACTOR-PRODUCED ISOTOPES - 08-01-01 1

A. Biomedical Radioisotopes 1

1. Potassium-43 1

B. Isotopic Power 2

1. Thulium-170 2

C. Reactor Products Pilot Production 3

D. Miscellaneous 3

1. HFIR Testing 3

ACCELERATOR-PRODUCED ISOTOPES - 08-01-02 3

A. Biomedical Radioisotopes 3

1. Gallium-67 3
2. Indium-111 4
3. Lead-203 5

B. The Rare-Earth Radionuclides 5

1. Europium-148 6

C. Accelerator Pilot Production 6

FISSION PRODUCTS - 08-01-03 7

A. Krypton-85 Enrichment 7

B. Cesium-137 Gamma Source Development 8

1. Cesium Source Form Development 8

C. Cesium-137 Pilot Production 12

1. Processing and Process Status 12
2. Operational Summary 12
3. Current Orders 12

D. Strontium-90 Pilot Production 13

1. Processing and Process Status 13
2. Operational Summary 13

Page

3. Current Orders 13
4. Source Fabrication 14

E. Strontium Pellet Vacuum Hot Press 15

F. Promethium-147 Source Fabrication, Powder Shipment, and Current Orders 16

G. Short-Lived Fission Products Pilot Production 16

APPLICATIONS AND TECHNOLOGY SUPPORT - 08-01-04 17

A. Radioisotope Characterization, Quality Control, and Standards 17

1. Radioisotope Characterization 17
2. Radioisotope Special Analysis and Quality Control . . . 17

B. Low-Energy Gamma and Secondary X-Ray Sources 18

1. Americium-241 Source for Vanderbilt University Hospital 18

C. Radioisotope Safety 18

1. ORNL Source Classification Testing 18

TECHNOLOGY UTILIZATION - 08-01-05 22

A. Information Center 22

B. Isotopes and Radiation Technology 23

C. Publications 23

RADIOISOTOPE APPLICATIONS DEVELOPMENT 24

SYSTEMS ENGINEERING APPLICATIONS - 08-03-02 24

A. Oceanographic Systems Study 24

RADIOISOTOPE SALES 25

ADMINISTRATIVE 25

PUBLICATIONS 26

REPORTS 26

TRANSLATION 27

PATENT 27

RADIOISOTOPE PROGRAM (8000) PROGRESS REPORT FOR MAY 1971

A. F. Rupp

RADIOISOTOPE PRODUCTION AND MATERIALS DEVELOPMENT

REACTOR-PRODUCED ISOTOPES - 08-01-01

A. Biomedical Radioisotopes

1. Potassium-43

The objectives of this project are: to prepare potassium-43 by the $^{43}Ca(n,p)^{43}K$ reaction, using isotopically enriched ^{43}CaO targets, in quantities sufficient for medical and biological experiments; to define a method for separating potassium-43 from the target in a purity suitable for medical use; and to establish cooperative programs with medical institutions interested in evaluating its usefulness. Potassium-43, with a half-life of 22.4 hr and gamma-ray emissions of 0.373 and 0.617 MeV, is potentially useful for metabolic and clinical studies of blood flow, rejection of transplanted organs, and kidney function because the dose rate would permit multiple doses.

Two batches of potassium-43 were made. Data for the runs are summarized in Tables 1 and 2.

Table 1. Yield of Potassium-43 from Calcium-43 Target

	Target 360	Target 361
Weight ^{43}CaO (~50%),[a] mg	167	203
Irradiation time, hr	65.2	59.5
Product delivery date	5/4/71	5/18/71
Total product at 8:00 AM on delivery date, mCi		
Potassium-43	9.9	12.4
Potassium-42	1.2 (12.6%)	1.6 (13.2%)

[a]Recovered May 1971. Isotopic analysis: ^{40}Ca, 21.9 at. %; ^{41}Ca, <0.001 at. %; ^{42}Ca, 8.31 at. %; ^{43}Ca, 50.7 at. %; ^{44}Ca, 19.0 at. %; ^{45}Ca, ≤0.01 at. %; ^{46}Ca, <0.001 at. %; and ^{48}Ca, 0.057 at. %.

Table 2. Radionuclides Found in Dissolver Sample by Gamma Scanning

Radionuclide	Half-life	Activity at Discharge[a] (mCi)		Specific Activity at Discharge (μCi per mg of target)	
		No. 360	No. 361	No. 360	No. 361
Potassium-43	22.5 h	22.7	28.0	136	138
Potassium-42	12.4 h	5.1	7.5	31	37
Sodium-24	15.0 h	1.2	2.6	7.5	13
Manganese-56	2.58 h	16	18	96	89
Strontium-87m	2.83 h	12	12	73	62
Calcium-47	4.53 d	0.54	0.54	3.3	2.7
Scandium-46	83.8 d	2.3	3.3	14	16
Scandium-47	3.35 d	obscured by gold-199			
Samarium-153	46.8 h	0.06	0.09	0.4	0.4
Cadmium-115	53.5 h	trace	trace		
Lanthanum-140	40.2 h	0.06	-	0.4	-
Ytterbium-175	101 h	0.75	2.2	4	11
Gold-199	3.15 d	0.4	∿0.5	2	∿3

[a]Total target.

As predicted in the last report, the rare-earth contaminants in the target were largely removed during that potassium-43 processing and are much less evident in the current recovered target.

Shipments were made under medical cooperative programs to Johns Hopkins Medical Institution; Peter Bent Brigham Hospital; V. A. Hospital, Durham; University of Mississippi Medical Center; and University Hospitals of Cleveland.

B. Isotopic Power

1. Thulium-170

The objectives of this research are to provide sufficient data on thulium-170 to permit assessment of its potential application as an isotopic power source for short-duration missions.

Our new high vacuum furnace for obtaining the vapor pressure data has now reached steady-state operating condition with a minimum pressure of approximately 2.5×10^{-6} Torr at 2000°C (without the liquid nitrogen baffle). Experiments to obtain the correction factors are in progress, and the rates of weight change of the two empty Knudsen cells at 1980°C have become essentially constant. The large cell (12.70 mm in diameter and 16.92 mm high) lost weight at an average rate of 3.47×10^{-4} mg/min, while the rate of weight gain of the small cell (9.52 mm in diameter and 12.70 mm high) averaged 2.37×10^{-4} mg/min.

The rates of weight change of both cells at 1740°C have not yet reached constant values. One experimental run to acquire data for computing

vapor pressure was recently completed using the large Knudsen cell containing Tm_2O_3 at 1980°C. A duplicate run at the same temperature is underway with the same cell to ensure reproducibility of the data.

C. Reactor Products Pilot Production (Production and Inventory Accounts)

Processed Units		Service Irradiations	
Radioisotope	Amount (mCi)	Type	Number
Indium-114	1,470	Vanadium	1
Rubidium-86	6,750		
Tungsten-185	695		
Thulium-170	25,000		
Copper-67	11		
Gallium-72	847		
Barium-131	9		
Hafnium-181	6,435		
Calcium-47	8		
Thallium-204	819		
Barium-133	Analysis not available		

D. Miscellaneous

1. HFIR Testing

Three removable beryllium rods were tested with no failures. Five hydraulic tube rabbits were tested with one failure.

ACCELERATOR-PRODUCED ISOTOPES - 08-01-02

A. Biomedical Radioisotopes

1. Gallium-67

The objectives of this program are to determine the optimal target configuration for gallium-67 (78.2 hr) production by the $^{68}Zn(p,2n)^{67}Ga$ reaction in acceptable purity and quantity and to provide gallium-67 for clinical applications research and development. Interest in this isotope has been spurred by evidence, obtained by the Medical Division of Oak Ridge Associated Universities (ORAU), of a high uptake of carrier-free gallium-67 by lymphoid tumors in both animals and humans.

Gallium-67 decays by electron capture with the emission of four main gamma rays of 93, 184, 296, and 388 keV with intensities of 40, 23, 20, and 8%, respectively.

Weekly production of gallium-67 continued; four preparations were shipped to customers. The first 100-mCi shipment of gallium-67 was supplied to ORAU as part of the Cooperative Group to Study Localization of Radiopharmaceuticals project. This product was tested by ORAU and found to be pyrogen-free as required.

One problem encountered in the ORAU product finishing procedure has been the recovery of gallium-67 from the beaker used to evaporate the 0.2 *M* HCl raw product. The raw product, which is the medium used to back-extract gallium-67 from the organic phase, must be evaporated to dryness to remove the excess acid. During the normal product finishing, ≥98% of the gallium-67 can be leached from a Pyrex beaker with 0.05 *M* HCl. It is then ready for filtration and shipment. The ORAU product finishing calls for leaching the evaporation beaker with a predetermined volume of sterile, pyrogen-free solution (composition: sodium citrate = 3.5 mg/ml, sodium chloride = 7.7 mg/ml, and benzyl alcohol = 7.7 mg/ml). Preliminary tracer level experiments performed with carrier-free gallium-67 indicated that <50% could be recovered from Pyrex beakers which had been water prewashed, and only approximately 65% could be recovered by Pyrex beakers which had been prewashed with concentrated HCl. Due to processing schedule constraints dictated by ORAU's need to sterilize, test, and transship the final product on the same day as the chemical processing, the use of a lengthy procedure requiring the in-cell compounding and neutralization of a final product from a dilute HCl leach solution was precluded. Beaker materials (e.g., Teflon, Teflon-coated stainless steel, and Vycor) were tested with encouraging results. Teflon surfaces appear most promising, with ≥95% gallium-67 recovery. Teflon-coated glass and fused silica beakers will be tested during June. In the interim, Vycor beakers (recovery ≥92%) will be employed.

A technical note entitled "Chemical Processing of Cyclotron-Produced ^{67}Ga" has been accepted for publication in the *International Journal of Applied Radiation and Isotopes*. This note discusses the HCl-isopropyl ether separation process currently being used for gallium-67 production.

2. Indium-111

The objectives of this program have been to define and optimize the pertinent production parameters for the economical production of indium-111 of satisfactory quality for radiopharmaceutical manufacture. The current objectives are to obtain practical operating experience of the procedures developed by pilot production and to provide this radionuclide to interested customers as a special research material — in batch lots — for their evaluation. Indium-111 has been suggested for such studies as spinal-cerebral cisternography, aerosol lung studies, delayed brain scanning, visualization of the lymphatic system, metabolic studies of indium-labeled macroaggregates and colloids, and tumor localization. Indium-111 has gamma emissions of 173 keV (89%) and 247 keV (94%) ideally suited for external detection and an optimal half-life (2.81 days) for labeling and distribution studies which must be carried out over 24 hr or longer.

One batch of indium-111, approximately 100 mCi total at end of one-day decay allowance, was prepared and portions were supplied to interested clinicians as a special research material. A rough draft of our accumulated production and processing experience has been submitted for publication.

3. Lead-203

Lead-203 (52.1 hr) has been suggested as a possible bone-scanning agent with an acceptable half-life for production and shipment and with low radiation dose decay characteristics (i.e., it decays solely by electron capture with the emission of two main gamma rays of 279 and 401 keV with intensities of 81 and 5%, respectively). Three medical cooperative programs have been established to perform the applications evaluation of this nuclide.

Lead-203 can be produced with $\leq$22-MeV protons by two different reaction paths: (1) $^{203}Tl(p,n)^{203}Pb$ or (2) $^{204}Pb(p,2n)^{203}Bi \xrightarrow{EC,\beta^+} {}^{203}Pb$. Preliminary experiments utilizing the first reaction path have been undertaken for the initial investigation of this radionuclide due to the ready availability of a cyclotron target holder design and the lower cost of the enriched target material. A 3-in.-void capsule was loaded with approximately 4.0 g of natural isotopic abundance Tl_2O_3 and irradiated in the ORNL 86-Inch Cyclotron. A separation procedure based on the extraction of Tl(III) from a 2 *M* $HBr-Br_2$ solution into isopropyl ether, followed by a cation exchange chromatographic separation of lead-203 from the aqueous raffinate was employed for the initial processing. A 94% chemical yield was obtained from this process which required only about 6 hr. Additional development work will be pursued on this and alternative separation procedures during June. A production rate of approximately 35 mCi/mA-hr was measured for this target configuration and reaction path.

B. The Rare-Earth Radionuclides

It is becoming increasingly apparent that various insoluble compounds of rare earths (e.g., sulfides) in the form of colloids may be extremely useful in mechanically outlining obstructions due to cancerous tissue in the capillary and lymphatic systems of the body. The wide span of half-lives and gamma radiations available in this class of radionuclides which have essentially identical chemical properties allows a wide choice of nuclides.

Many of these nuclides exhibit Mössbauer properties again with a wide range of resonance cross section, natural width, minimum observable width, and recoil energy.

The rare earths occupy a region of the chart of the nuclides where the spherical nuclei change to permanently deformed nuclei,

with abrupt changes in nuclear structure properties. This transition region is particularly attractive for comparison of the observed nuclear properties to theoretical predictions.

1. Europium-148 (54.5 day)

Carrier-free europium-148 was produced in the ORNL 86-Inch Cyclotron by the $^{149}Sm(p,2n)^{148}Eu$ reaction utilizing the ∿87-μA beam of 12-MeV protons at the window target facility.

After irradiation, the target, which was contained in a nickel tube, was dissolved in nitric acid and the rare earths were precipitated with ammonium hydroxide. The rare-earth hydroxide was dissolved in hydrochloric acid and passed through a Dowex 1 anion exchange column in the chloride form. The eluate was evaporated down to dryness, taken up in dilute nitric acid, and passed through a Dowex 50W, 20-40 μm cation exchanger operating at 80°C and 500 psi with a 0.25 *M* α-hydroxyisobutyric acid as the eluent. The eluate was passed through a second Dowex 50W, 20-40 μm cation exchanger. The eluate, containing the rare-earth butyrate was then passed through a Dowex 50W, 50-100 mesh cation exchanger in the chloride form to remove the butyrate. The europium-148 was stripped off with 6 *M* HCl. Details of the production are given in Table 3.

Table 3. Production of Europium-148

Half-life (days)	54.5
Production Method	$^{149}Sm(p,2n)^{148}Eu$
Reaction Q-value (MeV)	-9.719
Cyclotron Facility	Window target
Beam Current (mA)	86.6 protons
Beam Energy on Target (MeV)	∿12
Target (116 mg)	$^{149}Sm_2O_3$ (97.46% isotopically enriched)
Production Rate (mCi/mA-hr)	
Europium-148	1.64
Europium-149	0.29
Yield (μCi/hr)	
Europium-148	142
Europium-149	25

C. Accelerator Pilot Production (Production and Inventory Accounts)

Table 4 gives the May 1971 accelerator irradiations for ORNL and non-ORNL programs.

Table 4. Accelerator Irradiations and Runs for May 1971

Product	No. of Runs	Time (hr:min) Beam	Misc.	Total	Total Charges
		ORNL Programs			
Gallium-67	4	15:25	5:55	21:20	$2,256.94
Lead-203	1	1:30	0:50	2:20	253.04
Gadolinium-153	1	6:00	0:50	6:50	749.62
Indium-111	1	2:00	1:15	3:15	340.11
Total		24:55	8:50	33:45	$3,599.71
		Non-ORNL Programs			
Yttrium-87	2	5:30	2:30	8:00	$ 1,240.20
Rubidium-84	1	5:45	1:15	7:00	1,724.99
Yttrium-88	1	8:00	1:15	9:15	1,380.25
Cobalt-57	2	98:00	2:30	100:30	16,543.78
Cobalt-56	1	3:00	1:15	4:15	655.10
Promethium	1	1:00	1:15	2:15	399.10
Total		121:15	10:00	131:15	$21,943.42

FISSION PRODUCTS - 08-01-03

A. Krypton-85 Enrichment

Units A, B, and AB (Fig. 1) were shut down for replacement of faulty valves. This work has been completed, and the units are being leak tested.

Unit	Activity in Unit (Ci)	Time Since Last Product Removal (days)	Count Rate in Product Section (counts/min) Apr 1971	May 1971
C	1784	140	6,250	5,300
CD	2309	390	17,850	17,100
D	1647	140	6,000	6,200

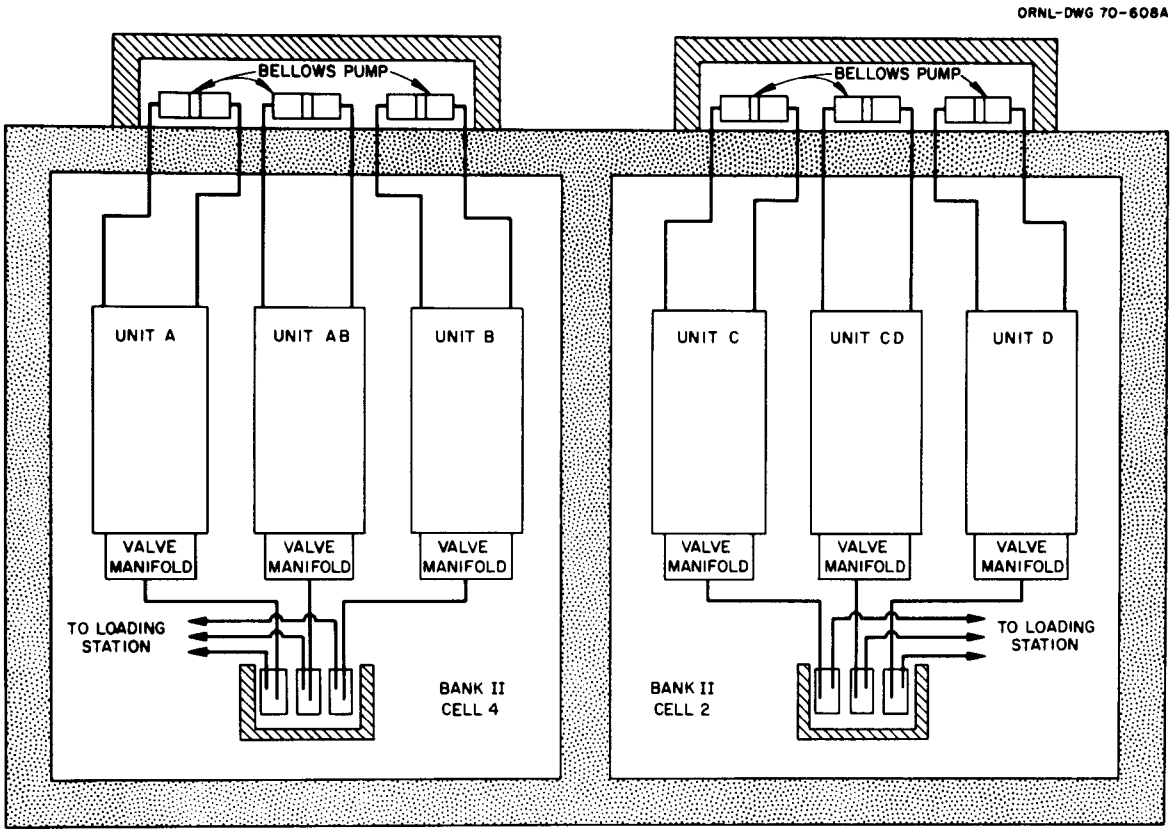

Fig. 1. Schematic Arrangement of Krypton-85 Columns.

B. Cesium-137 Gamma Source Development

1. Cesium Source Form Development

Cesium-137 chloride has been the compound of choice for radiation sources in applications of moderate temperature conditions. In many respects cesium chloride is the ideal compound; the cesium weight per unit volume is high, the radiation resistance of the CsCl is excellent, the compatibility with stainless steel at ambient temperatures is excellent, and its preparation is straightforward. However, the projected conditions of use of cesium-137 gamma sources are increasingly severe with respect to temperature, and some applications indicate the need for a cesium source material which has low solubility. In view of these projected conditions of use, the testing of ^{137}CsCl at elevated temperatures is being done and the development of a low-solubility, temperature-resistant source form of cesium is being studied.

a. Alternative Cesium-137 Source Form Development

A few experimental runs of $CsOH-Ta_2O_5$ slurry reaction and molten $CsOH-Ta_2O_5$ reaction have been made with mechanical agitation. The products from the above reactions were calcined to 1000°C. Some $CsOH-Ta_2O_5$ and $Cs_2CO_3-Ta_2O_5$ slurry reactions without a reflux condenser (until the reacting mass became dry) were made. Since the product stability in aqueous solution is one of the requirements for the alternative cesium-137 source compound, the experimental data are analyzed in terms of the insoluble cesium tantalates formed. Table 5 consolidates the results available for the runs made thus far, illustrating how formation of the insoluble cesium tantalates is influenced by selected reaction parameters.

According to Table 5, the conversion to sea water insoluble compounds by the slurry reaction is favored remarkably by the low water content (low H_2O/Ta_2O_5 mole ratio) of the initial reaction mixture (88.3% for sample M3 as compared with 54.8% for sample M6A). However, the trend is reversed when the H_2O/Ta_2O_5 ratio becomes too low as in the case of the molten $CsOH-Ta_2O_5$ reaction (compare M5 with M8, and M3 with M10). This behavior is probably an indication that the water-soluble cesium tantalate hydrates tend to form with the high H_2O/Ta_2O_5 ratios, while at a very low H_2O/Ta_2O_5 ratio the reaction is retarded by the relative inertness of Ta_2O_5.

The calcination temperature is another factor that exerts a strong influence upon the conversion to insoluble cesium tantalates. This effect is especially pronounced in the $Cs_2CO_3-Ta_2O_5$ slurry reaction (compare M12, M13, and M15) and in the molten $CsOH-Ta_2O_5$ reaction (compare M7 with M8, and M10 with M11). For the $CsOH-Ta_2O_5$ slurry reaction, the increase in the sea water insolubles is not appreciable when the calcining temperature is raised from 750°C to 1000°C (M3 and M4).

The effect of slurry reaction time is especially significant in the $CsOH-Ta_2O_5$ slurry reaction as can be seen in the upward trend in the sea water insolubles from 55.6 to 78.8% (M1 and M2) and from 54.8 to 87.9% (M6A and M6B), respectively. A similar comparison for the $Cs_2CO_3-Ta_2O_5$ slurry reaction indicates only a slight change in sea water insolubles (M13 and M14). As expected, provision of mechanical agitation promoted the conversion to insoluble compounds (M8 and M10) by the molten $CsOH-Ta_2O_5$ reaction. The benefit of the mechanical agitation was probably small in the slurry reaction since the reaction proceeded at boiling point. There does not seem to be any simple relation between the distilled water insolubles retained on the filter and various reaction parameters. A general trend is seen for the distilled water insolubles to diminish simultaneously with decreasing sea water insolubles, but several exceptions are also noted.

The study on the processes for preparing cesium vanadates has already started. Preliminary experimental data appear to indicate that cesium vanadates prepared by the slurry reaction are considerably more soluble than the corresponding niobates or tantalates.

Table 5. Amount of Insoluble Cesium Tantalates Produced Under Various Reaction Conditions

Sample Number	Calcining Temperature (°C)	Mole Ratio H_2O/Ta_2O_5 of Initial Mixture[a]	Mechanical Agitation During Reaction	Sea Water Insolubles (wt %)	Distilled Water Insolubles Retained on Filter[b] (wt %)
		$CsOH-Ta_2O_5$ Slurry Reaction Product			
M1[c]	∿230	medium	yes	55.6	17.6
M2	∿230	medium	yes	78.1	33.3
M3	750	medium	yes	88.3	47.6
M4	1000	medium	yes	89.0	58.5
M5[c]	750	high	yes	84.9	61.9
M6A[d]	750	very high	no	54.8	45.3
M6B[d]	750	very high	no	87.9	10.8
		Molten $CsOH-Ta_2O_5$ Reaction Product			
M7[e]	∿230	very low	no	69.1	18.3
M8[e]	750	very low	no	75.0	5.5
M9[f]	750	very low	no	78.6	10.7
M10[e]	750	very low	yes	83.2	23.0
M11[f]	1000	very low	yes	93.7	73.6
		$Cs_2CO_3-Ta_2O_5$ Slurry Reaction Product			
M12	∿230	medium	yes	63.5	58.8
M13	750	medium	yes	90.0	55.2
M14[c]	750	high	yes	87.0	69.2
M15	1000	medium	yes	100	98.2

[a]Includes water produced in the reaction between CsOH and Ta_2O_5.
[b]Excludes fine soldis that went through the filter.
[c]Reaction was carried out without a reflux condenser until the reacting mixture became dry.
[d]Reaction time for M6B was twice as long as that for M6A.
[e]Reaction temperature up to ∿350°C.
[f]Reaction temperature up to ∿520°C.

b. Improvement and Characterization of $^{137}CsCl$ Source Form

The calculated results in Table 6 show the variation in the coefficient of linear thermal expansion of the CsCl-KCl mixtures with the composition, the temperature range, and the previous history of the sample (e.g., whether sample has been previously molten or not, and the number of heating-cooling cycles). The coefficient after the solid phase transition is always considerably higher than that before transition. Likewise, the mechanical mixtures exhibit higher expansion coefficients than the molten mixtures in the low temperature range. Except for the 2 mole % KCl-CsCl molten mixture in the low-temperature range, the coefficient tends to diminish with the number of heating-cooling cycles. An increase in the amount of KCl (to 7 mole %) generally reduces the value of the expansion coefficient.

Table 6. Coefficient of Linear Thermal Expansion for Pure CsCl and KCl-CsCl Mixtures

Heating Cycle No.	Temperature Range (°C)	Coefficient of Linear Thermal Expansion[a] [in./(in.·°C) x 10^5]
	Pure CsCl	
1	150-300	5.49
	300-480	9.09
	480-550	239
2	150-400	5.15
	475-550	111
3	150-400	4.32
	485-550	103
	2 Mole % (or 0.9 wt %) KCl-CsCl (Molten)	
1	100-250	3.52
	350-400	12.5
	450-500	79.8
2	150-400	3.83
	450-500	54.7
3	100-350	4.15
	450-500	55.0
	2 Mole % (or 0.9 wt %) KCl-CsCl (Mechanical Mixture)	
1	50-150	5.47
	200-400	6.16
	500-550	62.0
2	100-400	4.81
	450-500	77.3
3	100-400	4.38
	470-520	33.6
	7 Mole % (or 3.2 wt %) KCl-CsCl (Molten)	
1	100-150	3.93
	150-200	9.85
	200-250	61.1
	400-450	68.9
2	100-250	1.65
	400-450	29.5
	7 Mole % (or 3.2 wt %) KCl-CsCl (Mechanical Mixture)	
1	100-400	7.09
	400-450	22.2
	450-535	108
2	100-375	4.16
	400-450	17.3
	450-525	42.7
3	100-380	3.81
	400-450	22.5
	450-500	36.3

[a]Thermal expansion characteristics in the temperature ranges not indicated are rather complex in nature.

C. Cesium-137 Pilot Production (Production and Inventory Accounts)

1. Processing and Process Status

All cesium-137 solution inventory was returned to storage tanks; thus the cesium-137 process system was emptied for line checks. Four such checks were made, two with colored solution and one each with cesium-137 tracer and sodium-24 tracer. Each check involved transfers of test solutions through all lines and tanks in the cesium-137 system with periodic checks of cell floor drains and other points where leaking so solution might be detected. No leaks were detected by the colored solution tests or cesium-137 tracer test. In the sodium-24 tracer test there was some indication of a slight leak in one of the lines in the cesium-137 concentrate (final crystallization) system. This system will be inspected in detail. The current cesium-137 process status is as follows (revised, based on annual inventory).

Item	Cesium-137 (Ci)
In-process material	658,000
^{137}CsCl product	18,600
Sources in fabrication	100,000
Completed sources awaiting shipment	46,500

2. Operational Summary

Item	May 1971		FY 1971	
	No.	Amount (Ci)	No.	Amount (Ci)
HAPO shipments received	0	0	1	388,200
Product batches prepared	0	0	0	0
Sources fabricated	0	0	62	43,400
Special form containers loaded	0	0	17	198,800
Sources shipped	0	0	283	163,300
Special form containers shipped	0	0	21	199,800

3. Current Orders

Current orders for cesium-137 as sources or bulk powder are shown below:

Customer	Amount (Ci)	Estimated Shipping Date
J. L. Shephard and Associates	1,550	June 1971
Atomic Energy of Canada Limited	1,500	June 1971
CEA, France	98,417	June 1971
American Hoechst Corporation	5	June 1971
Lockheed-Georgia Company[a]	∿35,000	June 1971
Brookhaven National Laboratory	203,000	July 1971
Total	339,472	

[a]The cesium-137 activity to be supplied by Lockheed-Georgia Company.

An order is on hand from AECL for approximately 154,300 Ci as bulk powder or sources to be scheduled and shipped as released by the customer.

D. Strontium-90 Pilot Production (Production and Inventory Accounts)

1. Processing and Process Status

Two batches of $^{90}Sr_2TiO_4$ totaling 77,000 Ci were prepared. Pellet preparation was limited to some test pressings. A shipment of strontium-90 was received from the Atlantic Richfield Hanford Company in a HAPO-IB cask. The cask was cooled and vented; unloading will be done early in June. The quoted loading in this cask is 600,000 Ci, which would be the largest single shipment of strontium-90 received. The current strontium-90 process status is as follows (revised, based on annual inventory).

Item	Strontium-90 (Ci)
In-process material (estimated)	1,025,500
Strontium-90 products	219,000
Sources in fabrication	627,500
Returned SNAP sources	291,000
Completed sources awaiting shipment	129,500
Total	2,292,500

The strontium-90 hot press failed due to a broken waterline. This unit had made a total of 61 in-cell cycles including both pellet pressings and calcination runs. The press will be disassembled and the cell decontaminated for installation of another press.

2. Operational Summary

Item	May 1971		FY 1971	
	No.	Amount (Ci)	No.	Amount (Ci)
HAPO shipments received	1	600,000	1	600,000
Product batches prepared	2	77,000	20	695,000
Sources completed	8	109,800	19	798,700
Special form containers loaded	0	0	25	53,400
Shipments to customers	0	0	29	796,700

3. Current Orders

Current orders for strontium-90 as sources or bulk powder are as follows:

Customer	Amount (Ci)
U. S. Navy	208,000[a]
U. S. Navy	424,000[a]
U. S. Navy	29,000[b]
Gulf Energy & Environmental Systems	14,500[b]
Total	675,500

[a]Further work and subsequent shipment are pending receipt of instructions from customers.

[b]Material is ready for shipment, awaiting receipt of confirmation of license.

An order is on hand for approximately 20,000 Ci as bulk powder to be scheduled and shipped when released by Teledyne Isotopes.

4. Source Fabrication

The four Sentinel-25 sources, each containing approximately 106,000 Ci (732 W), are still being stored until welding problems are resolved. Test welds varying such parameters as weld current, electrode configuration, arc gap, shielding gas, etc. were attempted without success. The customer (Teledyne) is continuing weld development in an attempt to solve these problems.

Some difficulty was experienced with swelling of pellets in the liners in making the two SNAP-21 sources (33,000 Ci each) for the Navy. After attempting several alternatives to load the pellets in the liners and then into the capsules, the liners were discarded and the bare pellets placed into the capsules and a press-fit cap inserted into the capsule to prevent spread of contamination during the capsule welding operation. The sources were electron beam welded on May 5 and 6 and ultrasonically inspected. Both sources passed inspection. Source calorimetry indicated that these sources contained 216.5 and 222.5 W, respectively. After decontamination these sources were prepared for shipment in the customer's (3M) generator carrier.

A SNAP-21 liner was subjected to a heating test using internal heaters to determine if heat alone was sufficient to cause swelling of the liner. The heating method was designed to simulate the situation which existed in the actual liners containing pellets which swelled, i.e., a steel block was drilled out to receive two 3/8-in.-diam by 3-in.-long electric heaters, and the entire assembly was insulated. In the first test the liner was heated to 440°C for 68 hr. The only dimensional difference was that the open end of the liner was 0.002 in. out of round at the top. In the second test the liner was heated to 635°C for 20 hr. The open end of the liner was 0.007 in. out of round at the top at the conclusion of this test. All dimensions of the capsule were taken at the cold (room temperature) condition.

Six sources, each containing approximately 8,000 Ci, were loaded and welded (TIG) for Gulf Energy and Environmental Systems. Each source contained 52.5 ± 2.5 W_{th}.

E. Strontium Pellet Vacuum Hot Press

A fresh batch of powder was prepared for use in the vacuum hot press. The powder contained a mixture of $SrTiO_3$ and Sr_2TiO_4. The material used in pressing the first five pellets (discussed in last month's report) was $SrTiO_3$.

The $SrTiO_3$ powder (used in the first five pellets) was made from a mixture containing about 5 g/liter strontium and a 10% excess over the stoichiometric amount of TiO_2 required to convert all the strontium to $SrTiO_3$.

The $SrTiO_3$-Sr_2TiO_4 powder was made from a mixture containing about 13 g/liter of strontium and a 41% deficiency under the stoichiometric amount of TiO_2 required to convert all the strontium to $SrTiO_3$ (a 17% excess over the amount needed for conversion to Sr_2TiO_4).

The new powder was calcined at 1100°C for 4 hr just as was the previous powder. The physical appearance of the new powder was similar to the old; however, the new material had a finer texture.

Four pellets were pressed with the new material ($SrTiO_3$-Sr_2TiO_4 powder), none of which had as high a density as the previous five. A discussion of the four pellets follows:

Pellet 6 - The first pellet using the new material was pressed at 4000 psig at an average temperature of 1370°C for approximately 40 min. The pellet had a dull reddish finish on the outer surface and a chalky appearance at the ends compared with a glassy black surface on the previous pellets. The density was 4.3 g/cm^3.

The pellet was reinserted in the die and pressed at 4000 psig at a die body temperature of 1470°C. The material appeared less chalky, and the density increased to 4.4 g/cm^3, but the characteristic black color seen in the previous pellets was not found. Instead the interior of the pellet was a porous off-white material.

Pellet 7 - Pellet 7 was made as a check on the previous pellet and had a similar physical appearance. The density was even lower at 4.0 g/cm^3. The pellet was pressed at 4000 psig with an average die body temperature of 1340°C.

Pellet 8 - Pellet 8 was made from material recalcined at 1200°C for 16 hr. The powder was coarser than that used in pellets 6 and 7. For comparison, the powder above the top screen was the same as used in pellets 6 and 7. No density measurement was made on this pellet.

The pellet was sectioned to compare the appearance of the materials. The recalcined powder formed a denser mass (nonporous) but the off-white coloration was the same.

Pellet 9 - The recalcined powder was again placed in the furnace and calcined at approximately 1300°C for 16 hr. Pellet 9 was pressed from this material at 4000 psig and 1380°C. The density of this pellet was 3.3 g/cm^3. The physical appearance was similar to pellets 6-8.

The change in the strontium powder composition may have affected the pressing characteristics, at least in the nonradioactive material. Similar mixes are used at FPDL with strontium-90 without resulting in density losses or physical appearance changes in the pressed pellet.

A fresh batch of material is currently being prepared which will contain a higher mole ratio of TiO_2 to convert all the strontium to $SrTiO_3$. Pellets from this material will then be compared with the first nine.

F. Promethium-147 Source Fabrication, Powder Shipment, and Current Orders

Current orders for promethium-147 as bulk powder are shown below:

Customer	Amount (Ci)	Estimated Shipping Date
McDonnell Douglas Astronautics	50,000	May 1971[a]
Atomic Energy of Canada Limited	1,000	June 1971
Minnesota Mining & Manufacturing Co.	2,500	June 1971
Radiochemical Centre, England	1,000	June 1971
Total	54,500	

[a]To be shipped from Richland, Washington.

G. Short-Lived Fission Products Pilot Production (Production and Inventory Accounts)

Isotope	Number of Batches	Amount (Ci)
Xenon-133	3	1,300
Iodine-131	1	68
Zirconium-95	1	132
Cerium-144	1	40
Mixed Fission Products	1	1

APPLICATIONS AND TECHNOLOGY SUPPORT - 08-01-04

A. Radioisotope Characterization, Quality Control, and Standards

1. Radioisotope Characterization

Numerous inquiries about fundamental properties of radionuclides or actual or potential products of ORNL included one about the half-life of protactinium-231 (3.25×10^4 years), one on the radiations of barium-135m (∿16% 0.27-MeV gamma and ∿54% K x rays), another on the decay scheme of xenon-125 (17.1 hr, notably 55% of 0.19-MeV gamma), and one on K x-ray emissions of dysprosium-159 (∿97%), thallium-204 (∿1.4%), and tungsten-181 (∿60%). Increasing interest in x-ray emitters has resulted in a plan to prepare a table of x-ray percentages for nuclides where such radiation is important. The data will also be added to the nuclide information in the next edition of the *Isotope User's Guide*.

An inquiry about "carrier-free" mercury-203 prompted the response that HFIR-irradiated mercury would have a specific activity greater than 100 Ci/g, adequate for most applications. A question about radioreagent methods for sulfur resulted in a file search, which yielded little in addition to those methods already listed in our 1963 review.

2. Radioisotope Special Analysis and Quality Control

The report of the NRC standards panel has been cited by several publications and reprinted in *Atomic Energy Clearing House*. Its recommendations have been formally endorsed by ASTM Committee E-10 and by the ACS Division of Analytical Chemistry. More details of the survey are included in a local report.[1]

A question about the minimum possible amount of a contaminant in a radionuclide preparation led to the writing of simple equations in forms to allow easy computation of the ratio of radioactivities of nuclide "a" to nuclide "b":

$$A_a/A_b = N_a\sigma_a T_b/N_b\sigma_b T_a = W_a\sigma_a T_b M_b/W_b\sigma_b T_a M_a$$

where

A = activity
N = number of atoms of target nuclide
σ = cross section for production of radionuclide
T = half-life of radionuclide
W = weight of target nuclide
M = atomic weight of target nuclide.

---

[1] S. A. Reynolds, *A Survey of Needs for Radioactivity Standards*, ORNL-TM-3239 (September 1970).

For fission products, the simpler equation is

$$A_a/A_b = y_a T_b / y_b T_a$$

where

y = fission yield.

Application of the second equation to the minimum contamination of strontium-90 in strontium-89 produced by fission of uranium-235 gives a value of 0.6%.

Radionuclides contained in a filter were identified as plutonium-238 (∿0.01 μCi), europium-152 (∿0.0004 μCi), and lesser quantities of cesium-137 and ruthenium-106. Techniques were NaI(Tl) and Ge(Li) gamma spectrometry, followed by alpha spectrometry.

B. Low-Energy Gamma and Secondary X-Ray Sources

1. Americium-241 Source for Vanderbilt University Hospital

An americium-241 source containing approximately 11.0 Ci of radioactivity was fabricated. Four grams of $^{241}AmO_2$ was placed in 1/4-in.-OD by 9.3-in.-long aluminum tubing. The ends of the tubing were plugged and welded to seal in the radioactivity. The sealed source was leak tested and then bent into a 3-in.-diam ring source. The ring source was placed in a lead collimator which resulted in a ring-shaped radiation beam 1.65 in. in diameter. The aluminum tubing was 0.035 in. thick, which attenuated the approximately 60-keV photons from the americium-241 source only ∿10%. The radiation dose rate (on contact) was 20 R/hr. Collimation reduced the dose rate to 900 mR/hr at 2.0 in. from the source at the outlet of the collimator. The source will be loaned to Vanderbilt University Hospital, Nashville, Tennessee, to be used in a medical diagnostic instrument for fluorescence x-ray determination of inactive elements in tissue.

C. Radioisotope Safety

1. ORNL Source Classification Testing

a. $^{241}AmO_2$ Ring Source

A 12.3-Ci $^{241}AmO_2$ ring source to be used for fluoresence x-ray analysis of iodine-127 was classified as ORNL Class II-B. The tests were performed on a prototype source containing rare-earth oxides as a substitute for the $^{241}AmO_2$. The source was made from 0.25-in.-OD tubing having a 0.037-in. wall thickness. It was shaped in the form of a ring having a 2-7/8-in. ID and was sealed by fusion-welded aluminum end caps.

The following is a summary of the tests performed:

<u>Class B Operating Temperature Test</u> - The source was placed in dry ice (-75°F) for 24 hr, then allowed to warm to room temperature. No leak

was found by the vacuum leak test. The source was then heated in a furnace at 300°F for 24 hr. No leak was found by the vacuum leak test, and no change in weight occurred.

Class B Thermal Shock Test - The source was heated to 300°F, immersed in ice water (32°F), and then placed in dry ice (-70°F) for 15 min. No leak was found by the vacuum leak test.

Class B Maximum Temperature Test - The source was placed in a furnace at 750°F for 1 hr. No leak was found using the vacuum leak test, and no change in appearance occurred.

Class II External Pressure Test - The source was placed in a pressure vessel and held for 15 min at 100 psig. There was no change in weight and no leaks were found with the vacuum leak test.

Class II Puncture Resistance Test - The source was placed on top of the 1/8-in.-diam pin and a 45-g weight was dropped on it from a height of 3 ft. The capsule was slightly dented, but no leak was found with the vacuum leak test.

Class II Crushing Force Test - The source was placed in a press and a 200-lb force was applied for 1 hr. The capsule was not deformed and no leak was found.

Class II Shear Strength Test - The source was placed in the shear blocks, and a shear force of 100 lb was applied for 1 hr. The capsule was slightly dented, but no leak was found.

Class II Impact Test - The source was placed on the drop pad and a 6-lb weight was dropped on it from a height of 5 ft. The source was flattened by this test, but no leaks were found.

b. Evaluation of $^{241}AmO_2$ Alpha Sources

Four $^{241}AmO_2$-Cu sources received from Pacific Northwest Laboratory were evaluated. These sources had a 60-mil-thick, 7/8-in.-diam 304 stainless steel substrate with a 1/2-in.-diam sputter-deposited $^{241}AmO_2$-Cu active layer. The source was covered by sputtered layers of 304 stainless steel and nickel. Each source contained ~2.5 mCi of activity.

Each source was smeared for transferable activity as it was removed from the shipping container, then examined under a stereomicroscope for surface flaws, subjected to a 24-hr water leach test,[2] and given a final smear test. The results of these tests are given in Table 7.

[2] 10 CFR 32, Paragraph 32.102.

Table 7. Losses in Smear Tests and 24-Hr Water-Leach Test

Source No.	Activity Loss (dis/min alpha)		
	Initial Smear	24-hr Leach	Final Smear
S-Am-268A	0	4980	3270
S-Am-268B	14	5150	2550
S-Am-268C	25	550	310
S-Am-268D	5	8690	1430

Examination of the sources under the stereomicroscope showed that the source surfaces were essentially free from the types of defects found in the two previous designs,[3] such as pits, ridges, and exposed copper in the underlying layer.

The tests, which follow, are essentially the same as those used in evaluating the previous designs of this source in order to determine the effects of the design changes. One of the sources (S-Am-268C) was subjected to the least stringent classification in the ORNL Source Capsule Classification System (Class I-A), and the other three sources were subjected to environmental tests which are not required as a part of the Classification System. The tests are described below.

ORNL Source Capsule Classification Tests

Class A Maximum Temperature Test - The source was heated in a furnace at 400°F for 1 hr, then cooled to room temperature. The source smeared 310 dis/min before the test and 140 dis/min after the test. There was no visible damage.

Class A Operating Temperature Test - The source was sealed in a bottle and immersed in an ice bath (32°F) for 24 hr. It was then placed in a furnace and heated in air to 212°F for 24 hr. The source smeared 140 dis/min before the test and 370 dis/min after the test. No visible damage was found.

Class A Thermal Shock Test - The source was heated to 212°F, then plunged into a bath of ice water (32°F), removed after one minute, and placed in a container of dry ice (-70°F) for 15 min. The source smeared 370 dis/min before the test and 172 dis/min after the test. No visible damage was found.

Class I Puncture Test - The source was placed with the active surface on the 1/8-in.-diam pin and a 5-g weight was dropped from a height of 3 ft, striking the opposite side of the source. The source smeared 172 dis/min before the test and 190 dis/min after the test. The puncture pin caused a slight indentation but did not visibly rupture the source surface.

---

[3]A. F. Rupp, *Radioisotope Program (8000) Progress Report for July 1970*, ORNL-TM-3111 (July 1970).

Class I Shear Strength Test - The source was placed in the shear blocks and a force of 40 lb was applied for 30 min. The source smeared 190 dis/min before the test and 172 dis/min after the test. The source had a slight indentation but was not visibly ruptured.

Class I Crushing Force Test - The source was placed between two smooth plates and a force of 200 lb was applied for 15 min. The source smeared 172 dis/min before the test and 62 dis/min after the test. No visible damage was done to the source.

Class I Impact Test - The source was placed between two smooth plates and a 5-lb weight was dropped from a height of 4 ft, striking the top plate. The source smeared 62 dis/min before the test and 400 dis/min after the test. No ruptures were visible on the source surface.

Class I External Pressure Test - The source was placed in a pressure vessel and held at 30 psig for 15 min. The source smeared 400 dis/min before the test and 808 dis/min after the test. No visible damage was found.

After completing the classification tests the source was given a 24-hr water leach test. The resulting leach water contained 4.5×10^6 dis/min alpha (2.05 μCi) of activity. The initial 24-hr water leach test loss was only 550 dis/min, indicating that some porosity existed in the source at the end of the tests.

Temperature-Humidity Test

Source S-Am-268A was placed in an environmental chamber programmed for 8 hr at 131°F and 90% relative humidity and 8 hr at 36°F and 50% relative humidity. A period of 4 hr was provided for making the change from the high-temperature conditions to the low temperature conditions and another 4 hr was provided for changing from the low to the high temperature conditions, thus giving one complete cycle every 24 hr. The source smeared 3270 dis/min before the test and 7828 dis/min after the test. Additional smear tests were made at approximately 3-day intervals during the 37-day test period. These smears fluctuated between 4000 and 25,000 dis/min, averaging approximately 9200 dis/min and totaling 92,000 dis/min. After the test, the source was given a 24-hr water leach test. The leach water contained 576 dis/min of activity. In a similar leach test given just prior to the temperature-humidity test, the leach water was found to contain 4980 dis/min. The color of the source darkened considerably during the test, indicating that some oxidation of the surface was taking place.

Boiling Water Leach Test

Source S-Am-268B was subjected to a 28-day boiling water leach test. In this test the source was immersed in 50 ml of distilled water which was maintained at the boiling point. A total reflux condenser was used to prevent evaporative losses, and the water removed for analysis was replaced with equal amounts of distilled water. On the 11th day of the test, some rust spots were visible on the source and some darkening of the

surfaces, indicating that oxidation was taking place. The source smeared 2550 dis/min before the test and 10,900 dis/min after the test ended. The leach water and samples contained a total of 5170 dis/min.

Ultrasonic Cleaning Test

Two tests were made using sources S-Am-268A and S-Am-268B. The former had previously been used in the temperature-humidity test and the latter in the boiling water leach test. The ultrasonic cleaner used was a small 100-W laboratory type. The sources were each tested for two 1-hr periods. Smear tests of the sources taken before the test, after 1 hr, and after 2 hr were 3058, 76,490, and 288,628 dis/min for source S-Am-268A, and 7102, 11,592, and 49,814 dis/min for source S-Am-268B. The amount of activity in the cleaning water for source S-Am-268A was 327,000 dis/min. (0.147 μCi). The cleaning water for source S-Am-268B was not determined. A few small flakes of material fell off the source windows during the tests.

Elevated Temperature Test

Sources S-Am-268C and S-Am-268D were each subjected to this test. The test consisted of placing a source in a quartz tube and heating according the time-temperature curve of the Underwriters' Laboratory 1-hr fire test and then continuing at 1700°F for 5 additional hr. The furnace was preheated to 500°F in order to meet the requirement of 1000°F at 5 min. A dry air flow of 720 ml/min (2.4 cm/sec velocity at the test source) was passed over the source to sweep out any activity which might become airborne. The air stream was then passed through a 0.45-μm Millipore filter in order to collect any activity for counting. Source S-Am-268D (not used for any previous tests), although heavily oxidized, did not have any significant losses of activity during the 6-hr test (∿130 dis/min total on 12 filters). At the end of the test, the heat was shut off, but the air purge was left on overnight. By morning the filter had picked up 54,626 dis/min, and the source window was dislodged. Particles of active material were scattered for ∿2 in. on either side of the source. Smears of this material were too high to read on the smear counter.

Source S-Am-268C, which had previously been used for the classification tests, lost small amounts of activity during the test. The initial filter counted 832 dis/min. The remaining filter decreased gradually to a low of 44 dis/min at the end of the 6-hr test. This source also underwent some damage during cooling overnight and the filter was too active to be counted. Heavy oxidation was also present on the surfaces of this source.

TECHNOLOGY UTILIZATION - 08-01-05

A. Information Center

In May, 119 requests for information were filled with dispatch of ∿450 items, 165 of which were already prepared at the Center (plus 240 *Understanding the Atom* pamphlets). Six sales letters were translated. A list of reviews in progress is shown on page 23.

Title	Author(s)	Status (% Complete)
Iodine-125	P. S. Baker and Martha Gerrard	30
Patent Literature on Process Radiation and Irradiator Design, Part 1. U. S. Patents 1950 Through 1968	R. E. Greene, Helen S. Warren, and P. S. Baker	Draft approved by DID; publication preparation in progress
Potato Sprout Inhibition by Radiation, Part 2	F. E. McKinney	50
Selected Abstracts of World Literature on Production and Industrial Uses of Radioisotopes,	Martha Gerrard and P. S. Baker	
Part 1 of 1971		Completed
Part 2 of 1971		10
Self-Diffusion in Liquids	F. J. Miller	75
Technetium-99m: Preparation and Uses	Martha Gerrard and P. S. Baker	65
Radioisotopes in the Textile Industry	F. J. Miller	90
Grain Disinfestation — A Worldwide Review	F. E. McKinney	20
Presowing Irradiation of Seed	Russian book translated and edited by Martha Gerrard	Final copy being proofed
Iodine-131 Production Methods	French report being translated by Martha Gerrard	References being checked
Radioelectrochemistry	Helen P. Raaen	1st draft completed
Nuclear Methods in Study of Environment	Helen P. Raaen	Draft 75% completed
Fruit and Vegetable Bibliography (revision)	F. E. McKinney	Program being debugged
Minerals	R. H. Lafferty	First draft of two sections sent to DID 5/21/71 for approval
Semiconductors	H. P. Raaen	In progress
Special Sources (supplement)	F. E. McKinney	30
Bibliography of DID Contractor Publications	P. S. Baker	20

B. Isotopes and Radiation Technology

Isotopes and Radiation Technology 9(1) galley proofing was started, and writing and editing for 9(2) were continued.

C. Publications

Roberta Shor, R. H. Lafferty, and P. S. Baker (compilers and editors), *Strontium-90 Heat Sources*, ORNL-IIC-36.

F. LaVeissiere, *Isotopic Generators of Electricity*, Rpt. CEA-Bib-190, translated from French by Martha Gerrard, ORNL-tr-2485.

G. Courtois and G. Sauzey, Labeled Sediment Masses for Injection in a Radioactive Tracer Experiment in Dynamic Sedimentology, *La Houille Blanche* 1970(7): 629-42, translated from French by Martha Gerrard, ORNL-tr-2486.

Argentinian report on Use of Cesium-137 Source to Process Potatoes, translated from Spanish by Martha Gerrard.

RADIOISOTOPE APPLICATIONS DEVELOPMENT

SYSTEMS ENGINEERING APPLICATIONS - 08-03-02

A. Oceanographic Systems Study

Radionuclides appear to be useful tools to study sand transport phenomena and, although many experiments have been conducted to demonstrate their effectiveness as tracers, little is known concerning whether or not the dynamic systems in which they are used can be tagged well enough to achieve quantitative data leading to an understanding of basic mechanisms. The Radioisotope Sand Tracing (RIST) study has progressed through equipment development to the point where important system tagging parameters can be studied.

Work on the simplified radiation detection and data collection unit has progressed to the 50% complete design stage with some fabrication of the data collection hardware completed. Several technology problems have occurred, and most of them have been resolved.

The first problem was to find a reliable cassette tape transport which has the following features:

1. Direct current operation for all functions with reasonable voltage tolerances.

2. Recording technique such that the recorded data could be read into a Digital Corporation PDP-8/I computer from a second cassette tape transport.

3. A unit which has a working interface with software subroutines for the computer.

4. The interface, software, transport control, and unit-to-unit compatibility which would accept the RIST data format.

After an exhaustive search, it was concluded that no commercial unit could meet the requirements. A decision was made to start with a unit which has the reputation of being the most reliable, and an AMPEX TMC cassette tape transport was ordered. Direct current voltage tolerances on the unit are severe, and work was started on a dc-to-dc converter to provide the necessary voltage range. Since there was not a suitable commercial converter available, it is being fabricated in-house.

Only one cassette tape manufacturer had a good interface to the computer, and their unit was strictly ac operated. Inquiries have been made to several companies concerning interfaces and software which would suit RIST needs. Datacom Inc., Fort Walton Beach, Florida, is presently working with Instrumentation and Controls Division to provide the interface and tape transport software. The recording technique will be a slight modification to the new European standard. The logic circuitry is progressing well.

Provision for direct computer interfacing is being provided so CERC will have the option of realtime processing or storage on the cassette. This provision was a direct result of the good on-board computer performance demonstrated during the March RIST test at Masonboro Inlet, North Carolina.

RADIOISOTOPE SALES

A request for quotation was received from Sanders Nuclear Corporation for 100 strontium-90 sources containing approximately 12 MCi for delivery during 1975-1977. A request for quotation was received from AECL for 50 cesium-137 sources containing 21,155 Ci.

Shipments made during the month include 4,000 Ci of tritium to New England Nuclear Corporation; 10,000 Ci of tritium to United States Radium Corporation; 100 Ci of krypton-85 to Radiochemical Centre, England; and 100 Ci of krypton-85 to Industrial Nucleonics Corporation. Other shipments include 141.6 Ci of xenon-133, 15,600 Ci of tritium, 335.5 Ci of krypton-85, 22.5 mCi of argon-37, 359 Ci of tritium-helium mixture, 5.5 Ci of 26.6% enriched krypton-85, 20 Ci of 15.29% enriched krypton-85, and 1.2 μCi of plutonium-236.

The radioisotope sales proceeds and shipments for the first ten months of FY 1970 and FY 1971 are given in Table 8.

Table 8. Radioisotope Sales and Shipments

Item	7-1-69 thru 4-30-70	7-1-70 thru 4-30-71
Inventory items	$ 521,782	$ 464,381
Major products	92,634	102,757
Radioisotope services	289,367	228,819
Cyclotron irradiations	111,842	96,585
Miscellaneous processed materials	63,032	55,287
Packing and shipping	62,965	69,758
Total Radioisotope Sales	$1,141,622	$1,017,587
Total Number of Shipments	2,142	2,608

ADMINISTRATIVE

Visitors to the IDC and travel by IDC personnel are given in Tables 9 and 10.

Table 9. Visitors to IDC

Affiliation	Purpose of Visit
Teledyne Isotopes	Discuss Sentinel-25 and Sentinel-100 strontium-90 generators
Vanderbilt University	Discuss holmium-166m and germanium-68 experiments
Donald W. Douglas Laboratories, Mound Laboratory, Savannah River Laboratory, and AEC	Meeting at ORNL on $^{238}PuO_2$ aging experiment using a mixture of $^{242}Cm_2O_3$ and $^{238}PuO_2$
AAEC Research Establishment Radioisotope Section Sydney, Australia	Discuss production, processing, and supply of plutonium-238 and curium-244 radiation sources and accelerator production of radioisotopes for medical applications
Tennessee State, Meharry, Lane, LeMoyne, and Knoxville Colleges and Fisk University	Tour Isotopes Information Center

Table 10. Travel of IDC Personnel

Site Visited	Purpose
Washington, D. C.	Attend meeting on government-sponsored information centers and to participate in round table discussion
Idaho Falls, Idaho	Attend AEC Materials Meeting at Idaho Nuclear Corporation

PUBLICATIONS

REPORTS

A. F. Rupp, *Radioisotope Program (8000) Progress Report for April 1971*, ORNL-TM-3414, Oak Ridge National Laboratory.

Eugene Lamb, *Isotopic Power Fuels Monthly Status Report for April 1971*, ORNL CF-71-5-15, Oak Ridge National Laboratory.

J. H. Gillette, *Isotope Program (5000) Progress For Quarter Ending March 31, 1971*, Oak Ridge National Laboratory.

K. W. Haff, *Isotope Kilowatt Program Fueled Capsule Design and Evaluation A Safety Analysis*, ORNL-TM-3230, Oak Ridge National Laboratory (May 1971).

TRANSLATIONS

H. Daniel, The β^+-Decay of ^{47}V, *Z. Naturforsch.* 9a, 974-5 (1954), translated from german by J. J. Pinajian, ORNL-tr-2481.

PATENTS

John J. Pinajian, *Production of High Purity Nickel-66*, U. S. Patent 3 573 165 (March 30, 1971).

INTERNAL DISTRIBUTION

1. A. L. Allen
2. M. A. Baker
3. P. S. Baker
4. E. E. Beauchamp
5. G. E. Boyd
6-8. T. A. Butler
9. F. N. Case
10. W. R. Casto
11. J. A. Cox
12. F. L. Culler
13. W. C. Davis
14. J. S. Drury
15. J. H. Gillette
16. H. R. Gwinn
17. R. F. Hibbs
18. K. E. Jamison
19. Lynda Kern
20. E. H. Kobisk
21. E. Lamb
22. R. E. Leuze
23. J. L. Liverman
24. L. O. Love
25. W. S. Lyon
26. R. E. McHenry
27. F. M. O'Hara
28. W. W. Parkinson
29. J. J. Pinajian
30. M. E. Ramsey
31. S. A. Reynolds
32-33. R. A. Robinson
34. D. A. Ross
35. A. F. Rupp
36. R. W. Schaich
37. A. H. Snell
38. K. A. Spainhour
39. M. R. Skidmore
40-41. H. F. Stringfield
42. D. B. Trauger
43. A. M. Weinberg
44. J. C. White
45-46. Central Research Library
47. Document Reference Section
48-52. Laboratory Records Department
53. Laboratory Records - RC

EXTERNAL DISTRIBUTION

54. G. A. Andrews, ORAU, Medical Division, Oak Ridge, Tennessee
55. Hal Atkins, Brookhaven National Laboratory, Upton, New York
56. D. S. Ballantine, AEC, Washington, D. C.
57-60. R. F. Barker, AEC, Washington, D. C.
61. N. F. Barr, AEC, Washington, D. C.
62. O. M. Bizzell, AEC, Washington, D. C.
63. C. R. Buchanan, AEC, Washington, D. C.
64. R. L. Butenhoff, AEC, Washington, D. C.
65. T. D. Chikalla, PNL, Richland, Washington
66. D F. Cope, AEC Site Representative, ORNL
67. J. C. Dempsey, AEC, Washington, D. C.
68. W. K. Eister, AEC, Washington, D. C.
69. E. E. Fowler, AEC, Washington, D. C.
70. J. D. Goldstein, AEC, Washington, D. C.
71. A. Gottschalk, Argonne Cancer Research Hospital, Chicago, Illinois
72. F. D. Haines, AEC, Washington, D. C.
73-75. J. E. Hansen, PNL, Richland, Washington
76. J. W. Irvine, MIT (Consultant)
77. J. Lawrence, Lawrence Radiation Laboratory, Berkeley, California
78. J. E. Machurek, AEC, Washington, D. C.
79. J. N. Maddox, AEC, Washington, D. C.
80. J. C. Malaro, AEC, Washington, D. C.
81. W. E. Mott, AEC, Washington, D. C.
82. J. A. Powers, AEC, Washington, D. C.

83. G. J. Rotariu, AEC, Washington, D. C.
84. B. A. Ryan, AEC, Richland, Washington
85. W. D. Sandberg, AEC, Aiken, South Carolina
86. S. J. Seiken, AEC, Washington, D. C.
87. R. W. Shivers, AEC, Washington, D. C.
88. F. J. Skozen (Krizek), Argonne Cancer Research Hospital, Chicago
89. P. E Smith, ARHCO, Richland, Washington
90. L. G. Stang, Jr., BNL, New York
91-96. D. H. Turno, SRL, Aiken, South Carolina
97. A. R. Van Dyken, AEC, Washington, D. C.
98. Laboratory and University Division
99-100. Divison of Technical Information Extension