LOCKHEED MARTIN ENERGY RESEARCH LIBRARIES
3 4456 0514534 9

CENTRAL RESEARCH LIBRARY
DOCUMENT COLLECTION

OAK RIDGE NATIONAL LABORATORY
operated by
UNION CARBIDE CORPORATION • NUCLEAR DIVISION
for the
U. S. ATOMIC ENERGY COMMISSION

ORNL-TM-3501

Cy 45

OAK RIDGE NATIONAL LABORATORY
CENTRAL RESEARCH LIBRARY
DOCUMENT COLLECTION
LIBRARY LOAN COPY
DO NOT TRANSFER TO ANOTHER PERSON
If you wish someone else to see this document, send in name with document and the library will arrange a loan.
UCN-7969
(3 3-67)

RADIOISOTOPE PROGRAM (8000) PROGRESS REPORT FOR JUNE 1971

A. F. Rupp

~~DISTRIBUTION LIMITED TO AEC AND AEC CONTRACTORS~~

NOTICE This document contains information of a preliminary nature and was prepared primarily for internal use at the Oak Ridge National Laboratory. It is subject to revision or correction and therefore does not represent a final report.

This report was prepared as an account of work sponsored by the United States Government. Neither the United States nor the United States Atomic Energy Commission, nor any of their employees, nor any of their contractors, subcontractors, or their employees, makes any warranty, express or implied, or assumes any legal liability or responsibility for the accuracy, completeness or usefulness of any information, apparatus, product or process disclosed, or represents that its use would not infringe privately owned rights.

ORNL-TM-3501

Contract No. W-7405-eng-26

Isotopes Development Center

RADIOISOTOPE PROGRAM (8000) PROGRESS REPORT FOR JUNE 1971

A. F. Rupp

Work Sponsored by
AEC Division of Isotopes Development

JULY 1971

OAK RIDGE NATIONAL LABORATORY
Oak Ridge, Tennessee
operated by
UNION CARBIDE CORPORATION
for the
U.S. ATOMIC ENERGY COMMISSION

LOCKHEED MARTIN ENERGY RESEARCH LIBRARIES

3 4456 0514534 9

CONTENTS

Page

RADIOISOTOPE PRODUCTION AND MATERIALS DEVELOPMENT 1

REACTOR-PRODUCED ISOTOPES - 08-01-01 1

A. Biomedical Radioisotopes 1

1. Phosphorus-33 1
2. Potassium-43 1

B. Isotopic Power 3

1. Thulium-170 3

C. Reactor Products Pilot Production 4

D. Miscellaneous 4

1. HFIR Testing 4

ACCELERATOR-PRODUCED ISOTOPES - 08-01-02 5

A. Biomedical Radioisotopes 5

1. Gallium-67 5

B. Rare-Earth Radionuclides 5

1. Europium-156 5
2. Terbium-156 8

C. Angular Correlation 8

D. Accelerator Pilot Production 8

FISSION PRODUCTS - 08-01-03 9

A. Krypton-85 Enrichment 9

B. Cesium-137 Gamma Source Development 10

1. Alternative Cesium-137 Source Form Development 10

C. Cesium-137 Pilot Production 14

1. Processing and Process Status 14
2. Operational Summary 14
3. Current Orders 15
4. Source Fabrication 15

Page

D. Strontium-90 Pilot Production 15

1. Processing and Process Status 15
2. Operational Summary 16
3. Current Orders 17
4. Source Fabrication 17

E. Strontium Pellet Vacuum Hot Press 17

F. Strontium-90 Beta Source for University of California . . . 20

G. Strontium-90 Silicate Beta Sources Report 20

H. Promethium-147 Source Fabrication, Powder Shipment, and Current Orders 20

I. Short-Lived Fission Products Pilot Production 20

SOURCE DEVELOPMENT - 08-01-04 20

A. Radioisotope Characterization, Quality Control, and Standards 20

1. Radioisotope Characterization 20
2. Radioisotope Special Analysis and Quality Control . . . 21

B. Radiation Source Development 22

1. Krypton-85/Aluminum Sources 22
2. Snow Gage 23

TECHNOLOGY UTILIZATION - 08-01-05 24

A. Information Center 24

B. Isotopes and Radiation Technology 24

C. Publications 25

RADIOISOTOPE SALES 26

ADMINISTRATIVE 26

PUBLICATIONS 27

JOURNALS 27

REPORTS 28

TRANSLATION 28

RADIOISOTOPE PROGRAM (8000) PROGRESS REPORT FOR JUNE 1971

A. F. Rupp

RADIOISOTOPE PRODUCTION AND MATERIALS DEVELOPMENT

REACTOR-PRODUCED ISOTOPES - 08-01-01

A. Biomedical Radioisotopes

1. Phosphorus-33

The purpose of this project is to develop methods of preparing hundred-millicurie quantities of carrier-free phosphorus-33 containing $\leq 5\%$ phosphorus-32. The two methods of producing phosphorus-33 being evaluated are based on the irradiation of highly enriched targets of sulfur-33 (>92 at. %) or chlorine-36 (approximately 63 at. %) in a fast neutron flux. Phosphorus-33 (25.2 days; 0.248-MeV β^-_{max}) has both a longer half-life and a lower energy beta than phosphorus-32 (14.3 days; 1.709-MeV β^-_{max}), which makes it advantageous for autoradiography, longer ecological and agricultural experiments than with phosphorus-32, synthesis of tagged complex organo-phosphorus compounds, and double labeling experiments.

An enriched (69%) $K^{36}Cl$ target containing 1.37 g was discharged after five irradiation cycles in the reactor. The phosphorus-33 is currently being processed. Preliminary analytical results indicate the phosphorus-32 content is approximately 14%, much higher than normally expected, and an aging period will be required. This target was irradiated much longer than the usual two cycles because there was no demand for the phosphorus-33. The quartz ampules also came from a new supply and may be implicated. Further study of the source of the phosphorus-32 will be necessary.

An enriched (>90%) $K_2{}^{33}SO_4$ target weighing 0.83 g was inserted into the reactor. The expected phosphorus-33 yield from this target is approximately 0.5 Ci after two cycles.

2. Potassium-43

The objectives of this project are: to prepare potassium-43 by the $^{43}Ca(n,p)^{43}K$ reaction, using isotopically enriched ^{43}CaO targets, in quantities sufficient for medical and biological experiments; to define a method for separating potassium-43 from the target in a purity suitable for medical use; and to establish cooperative programs with medical institutions interested in evaluating its usefulness. Potassium-43, with a half-life of 22.4 hr and gamma-ray

emissions of 0.373 and 0.617 MeV, is potentially useful for metabolic and clinical studies of blood flow, rejection of transplanted organs, and kidney function because the dose rate would permit multiple doses.

One batch of potassium-43 was made. Data for the run are summarized in Tables 1 and 2.

Table 1. Yield of Potassium-43 from Calcium-43 Target

	Target 382
Weight ^{43}CaO (61.63%),[a] mg	145
Irradiation time, hr	65
Product delivery date	6/8/71
Total product at 8:00 AM on delivery date, mCi	
Potassium-43	11.4
Potassium-42	1.3 (11.6%)

[a]New target, batch 136326. Isotopic analysis: ^{40}Ca, 12.67 at. %; ^{42}Ca, 9.38 at. %; ^{43}Ca, 61.63 at. %; ^{44}Ca, 16.32 at. %; ^{46}Ca, <0.1 at. %; ^{48}Ca, <0.1 at. %.

Spectrographic analysis of target (%): Ba (0.02), Sr (0.2), Mg (0.01).

Table 2. Radionuclides Found in Dissolver Sample by Gamma Scanning

Radionuclide	Half-Life	Activity at Discharge[a] (mCi)	Activity Concentration at Discharge (μCi per mg of target)
Potassium-43	22.5 h	27.0	186
Potassium-42	12.4 h	6.2	43
Sodium-24	15.0 h	1.1	8
Manganese-56	2.58 h	0.9	6
Strontium-87m	2.83 h	46	317
Calcium-47	4.53 d	0.24	1.7
Scandium-46	83.8 d	0.008	0.06
Scandium-47	3.35 d	0.2	1
Samarium-153	46.8 h	0.7	5
Copper-64	12.8 h	0.9	6
Gallium-72	14.1 h	0.1	0.7
Antimony-122	2.8 d	0.02	0.1
Antimony-124	60.2 d	0.0008	0.006
Barium-131	11.7 d	0.03	0.2
Barium-135m	28.7 h	0.16	1
Strontium-85	64.8 d	0.01	0.07

[a]Total target.

Since this is a new target it is interesting to calculate the level of elemental trace contaminants in the target from the observed activities. Only barium, strontium, and magnesium are reported in the batch spectrometric analysis. Elemental contaminants calculated from the dissolver activities are shown below.

Element	Amount (wt %)	Element	Amount (wt %)
Barium	0.06	Manganese	9×10^{-5}
Strontium	0.2	Gallium	9×10^{-5}
Sodium	0.001	Samarium	8×10^{-5}
Copper	7×10^{-4}	Antimony	4×10^{-5}
Chromium	2×10^{-4}	Scandium	2×10^{-5}

Calculation of the calcium-46 content yields a value of 1.1×10^{-3} atom %. The values above agree with the stable isotope spectrographic analysis with the exception of the barium result.

Shipments were made under medical cooperative programs to Johns Hopkins Medical Institution; Peter Bent Brigham Hospital; V. A. Hospital, Durham; University of Mississippi Medical Center; and University Hospitals of Cleveland.

B. Isotopic Power

1. Thulium-170

The objectives of this research are to provide sufficient data on thulium-170 to permit assessment of its potential application as an isotopic power source for short-duration missions.

Experimental runs at 1990°C to obtain data for computation of the Tm_2O_3 vapor pressure have been completed using the large Knudsen cell. In the vapor phase at approximately 2000°C, Tm_2O_3 dissociates into TmO, Tm, and O according to:

$$Tm_2O_3(s) \rightarrow nTmO(g) + (2 - n)Tm(g) + (3 - n)O \ .$$

The rates of effusion for various vapor species shown in Table 3 have been calculated using the value of n = 1.1 from the published mass spectrometric data. The weight change of the empty Knudsen cell, as well as the change in the orifice diameter with temperature, was taken into consideration. The effusion equation containing the Clausing factor (a factor related to transmission probability) was employed in the computation of partial pressures. The "apparent" vapor pressure of Tm_2O_3, 2.38×10^{-7} atm, (sum of the partial pressures of various vapor species) listed in Table 3 agrees fairly well in the order of magnitude with the value of 3.24×10^{-7} atm calculated from the equation derived based on the thermodynamic considerations.[1]

[1] J. R. Keski and P. K. Smith, Rpt. DP-MS-68-24, Savannah River Laboratory (1968).

Table 3. Rates of Effusion, and Partial and Total Pressures of Various Vapor Species Above Solid Tm_2O_3 in Large Knudsen Cell at 1990°C

Vapor Species	Rate of Effusion[b] ($g/cm^2.min$) x 10^5	Partial Pressure[c] (atm) x 10^7
TmO	7.77	1.04
Tm	5.80	0.81
O	1.14	0.53
Total[a]	14.73	2.38

[a]"Apparent" vapor pressure of Tm_2O_3.
[b]Corrected for the weight change of the empty Knudsen cell as well as for the thermal expansion of the orifice.
[c]Corrected for the Clausing factor (a transmission probability).

Similar experiments with Tm_2O_3 are in progress at 1990°C using the small Knudsen cell, but the weight change data have not reached a steady-state value as yet. The purpose of the experiments is to investigate the effect of the cell geometry on the effusion rate. The results will be used as a basis in deciding which cell is to be employed in the future vapor pressure experiments for Yb_2O_3 and Tm_2O_3-Yb_2O_3 mixtures.

C. Reactor Products Pilot Production (Production and Inventory Accounts)

Processed Units		Service Irradiations	
Radioisotope	Amount (mCi)	Type	Number
Tantalum-182	580	$^{96}ZrO_2$	2
Calcium-47	16	$^{152}Gd_2O_3$	1
Silver-111	253	Iron-Nickel	1
Barium-131	12.5	Cesium-134	3
Nickel-63	a	$^{144}Sm_2O_3$	1

[a]No analysis available.

D. Miscellaneous

1. HFIR Testing

One removable beryllium rod and five hydraulic tube rabbits were tested this month with no failures.

ACCELERATOR-PRODUCED ISOTOPES - 08-01-02

A. Biomedical Radioisotopes

1. Gallium-67

The objectives of this program are to determine the optimal target configuration for gallium-67 (78.2 hr) production by the $^{68}Zn(p,2n)^{67}Ga$ reaction in acceptable purity and quantity and to provide gallium-67 for clinical applications research and development. Interest in this isotope has been spurred by evidence, obtained by the Medical Division of Oak Ridge Associated Universities (ORAU), of a high uptake of carrier-free gallium-67 by lymphoid tumors in both animals and humans.

Gallium-67 decays by electron capture with the emission of four main gamma rays of 93, 184, 296, and 388 keV with intensities of 40, 23, 20, and 8%, respectively.

Weekly production of gallium-67 has been continued; five preparations were shipped. Weekly shipments of 100-mCi batches of gallium-67 were continued to ORAU as part of the Cooperative Group to Study Localization of Radiopharmaceuticals project, with five shipments during this period. These products were all tested by ORAU and found to be pyrogen-free as required.

B. Rare-Earth Radionuclides

It is becoming increasingly apparent that various insoluble compounds of rare earths (e.g., sulfides) in the form of colloids may be extremely useful in mechanically outlining obstructions due to cancerous tissue in the capillary and lymphatic systems of the body. The wide span of half-lives and gamma radiations available in this class of radionuclides which have essentially identical chemical properties allows a wide choice of nuclides.

Many of these nuclides exhibit Mössbauer properties again with a wide range of resonance cross section, natural width, minimum observable width, and recoil energy.

The rare earths occupy a region of the chart of the nuclides where the spherical nuclei change to permanently deformed nuclei, with abrupt changes in nuclear structure properties. This transition region is particularly attractive for comparison of the observed nuclear properties to theoretical predictions.

1. Europium-156 (15.2 day)

Last month the preparation of 54.5-day europium-148 by the $^{149}Sm(p,2n)^{148}Eu$ reaction was reported. Europium-148 was used to develop chemical separation procedures to be used in the preparation of 15.2-day europium-156,

14-year europium-152, and 93-day europium-149. Europium-148 is of particular interest because of its near spherical nucleus, and in collaboration with Vanderbilt University the high purity carrier-free europium-148 which resulted from this program was used in an investigation of its decay properties.[2]

The preparation of 15.2-day europium-156 was studied because of its usefulness as a Mössbauer source (88.97-keV Mössbauer line). The April report[3] described the preparation of 5.4-day terbium-156 which also decays to the excited levels of gadolinium-156. The relationship of europium-156 and terbium-156 to gadolinium-156 given in the Mössbauer Index[4] is shown in a simplified decay scheme:

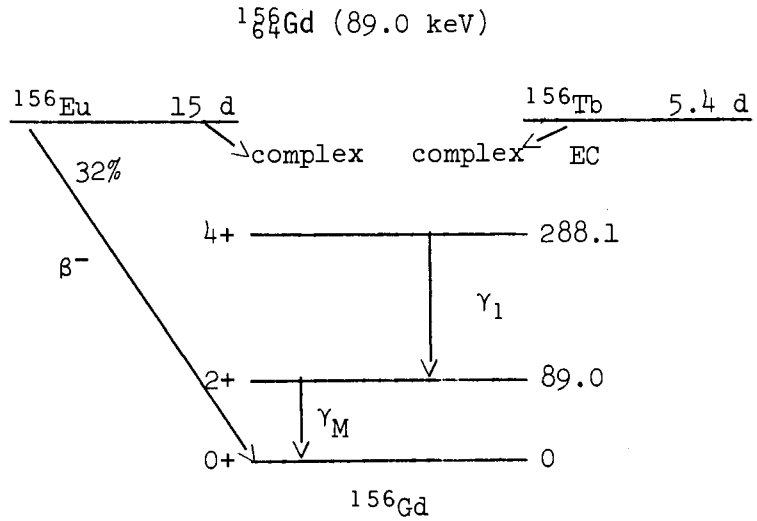

where the energies, relative intensities, and the total internal conversion coefficient for the 88.97-keV gamma ray are:

	E_γ	I_{Eu}	I_{Tb}
γ_M:	88.97 keV	46	25
γ_1:	199.19 keV	10	60
$\alpha_T(\gamma_M)$:	4.08 (ref. 5)		

Computer analysis of the mode of production demonstrated that almost all of the europium-156 activity is produced via the

$$^{154}Sm(n,\gamma)^{155}Sm \xrightarrow[22.3\ m]{\beta^-} {}^{155}Eu(n,\gamma)^{156}Eu \text{ path}$$

---

[2]V. Lakshminarayana, D. R. Dunn, S. M. Brahmavar, J. H. Hamilton, and J. J. Pinajian, *Bull. Am. Phys. Soc.* 16, 538 (1971).
[3]A. F. Rupp, *Radioisotope Program (8000) Progress Report for April 1971*, ORNL-TM-3414, Oak Ridge National Laboratory, p. 9.
[4]A. H. Muir, Jr., K. J. Ando, and H. M. Coogan, *Mössbauer Effect Data Index 1958-1965*, Interscience Publishers, New York, 1966.
[5]S. C. Pancholi, *Nucl. Phys.* 67, 203 (1965).

less than 0.09% being produced by the successive capture of two neutrons followed by the decay of 9.4-hr samarium-156 (see Fig. 1). Although the neutron-capture cross section of samarium-155 is not known and an estimated value of 100 barns was used, it can be shown that a cross section in excess of 200,000 barns would be necessary to compete with the 22.3-min decay of samarium-155 to europium-155. At a flux of 2.45 x 10^{15} n/cm^2.sec, ∿200 μCi of 4.65-year europium-155 are produced in a 12-hr irradiation, while ∿600 μCi of europium-155 are produced in a 5-day irradiation.

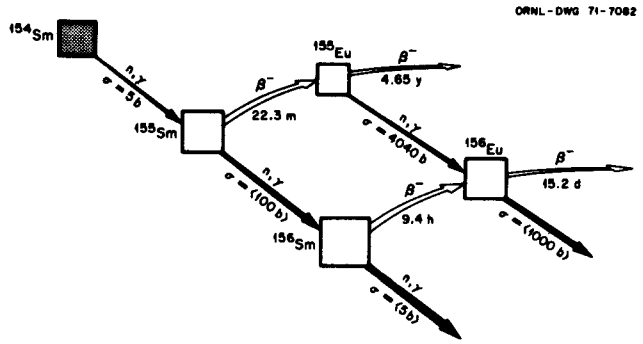

Fig. 1. Production Modes for ^{156}Eu.

Radiochemical separation of europium-156 was identical to that described for europium-148 last month: precipitation of the rare-earth hydroxide, purification of the rare earths by passage through a Dowex 1 anion exchanger, mutual separation of the rare earths by passage through a Dowex 50W, 20-40 μ cation exchanger using α-hydroxyisobutyric acid, and isolation of the europium-156 activity from the butyrate by passage through a Dowex 50W cation exchanger in the chloride form. The yields of 0.5-day and 5-day irradiations in the HFIR hydraulic tube were 4.8 and 346 mCi/mg, respectively.

The yield obtained for a 12-hr irradiation is approximately as expected; however, the yield obtained from a 5-day irradiation cannot be explained by the existing cross sections. If one assumes no burn-up of the europium-156 product and accepts the recent evaluation of the neutron capture cross section of europium-155 (due to a revision of the half-life of europium-155, the 13,000-barn cross section has been reduced to 4040 barns), the highest yield of europium-156 would be approximately 204 mCi/mg of samarium-154. Changing the 4040-barn cross section of europium-155 to 10,000 barns would yield only 238 mCi/mg. On the other hand, an increase in the cross section of samarium-154 from 5 to 7 barns increases the yield to 280 mCi/mg. It appears at this stage of the work that the answer lies in the effective neutron-capture cross section of samarium-154.

The high purity europium-156 product will be used to examine the decay properties. Europium-156 represents a deformed nucleus. Although the spins of the levels are known from angular correlation measurements, the parities are not known for many of the levels. The high-energy transitions (1-2 MeV) are of particular interest.

Kumar[6] of this laboratory has developed a model of these deformed nuclei. As a result of our work, we, in collaboration with Wright Patterson Air Force Base and Vanderbilt University, will be able to test the predictions of his model.

---

[6]K. Kumar and M. Baranger, *Nucl. Phys.* A122, 273 (1968) and A110, 529 (1968).

2. Terbium-156 (5.4 day)

Conversion electron intensity work of M. Fujioka (Department of Applied Physics, Tokyo Institute of Technology) has been utilized to complete our work on the decay of terbium-156. A draft of a proposed paper has been submitted to Dr. Fujioka for his comment and approval.

C. Angular Correlation

The favorable response to the graphic representation of (1-3) gamma-gamma directional correlation coefficients[7] issued in April has resulted in a suggestion from K. Way that we publish these graphs in *Nuclear Data*.

As a consequence of this interest, we have started plotting the data which we generated last year for the (1-2) gamma-gamma directional correlation coefficients. This work is approximately 25% completed. The final compilation will be approximately 100 graphs representing directional correlation coefficients A_2 and A_4 for gamma-gamma cascades and, as in the previous case, will be useful in determining the multipolarity of gamma-ray transitions which, in turn, will enable us to calculate the degree of internal conversion of the gamma rays.

D. Accelerator Pilot Production (Production and Inventory Accounts)

Table 4 gives the June 1971 accelerator runs for ORNL and non-ORNL programs.

Table 4. Accelerator Irradiations and Runs for June 1971

Product	No. of Runs	Time (hr:min) Beam	Misc.	Total	Total Charges
		ORNL Programs			
Rhodium-99	1	4:00	1:15	5:15	$ 795.10
Bismuth-207	1	8:00	1:15	9:15	1,498.68
		12:00	2:30	14:30	$2,293.78
		Non-ORNL Programs			
Barium-133m	1	3:00	1:15	4:15	$ 435.15
Gallium-67	5	24:10	10:35	34:45	3,527.38
		27:10	11:50	39:00	$3,962.53

[7]A. V. Ramayya, J. H. Hamilton, P. E. Little, E. Collins, and J. J. Pinajian, *Graphs for the Analysis of (1-3) Gamma-Gamma Directional Correlations*, ORNL-4619, Oak Ridge National Laboratory (April 1971).

FISSION PRODUCTS - 08-01-03

A. Krypton-85 Enrichment

Units A, AB, and B (Fig. 2), which had been shut down for repairs, were tested for leaks and found to be tight. An attempt to load these units with feed krypton was made, and the HI valve on unit B was found to be plugged. The krypton was removed to storage, and the faulty valve is being checked.

Unit	Activity in Unit (Ci)	Time Since Last Product Removal (days)	Count Rate in Product Section (counts/min) May 1971	June 1971
C	1784	170	5,300	8,250
CD	2309	420	17,100	17,000
D	1647	170	6,200	8,050

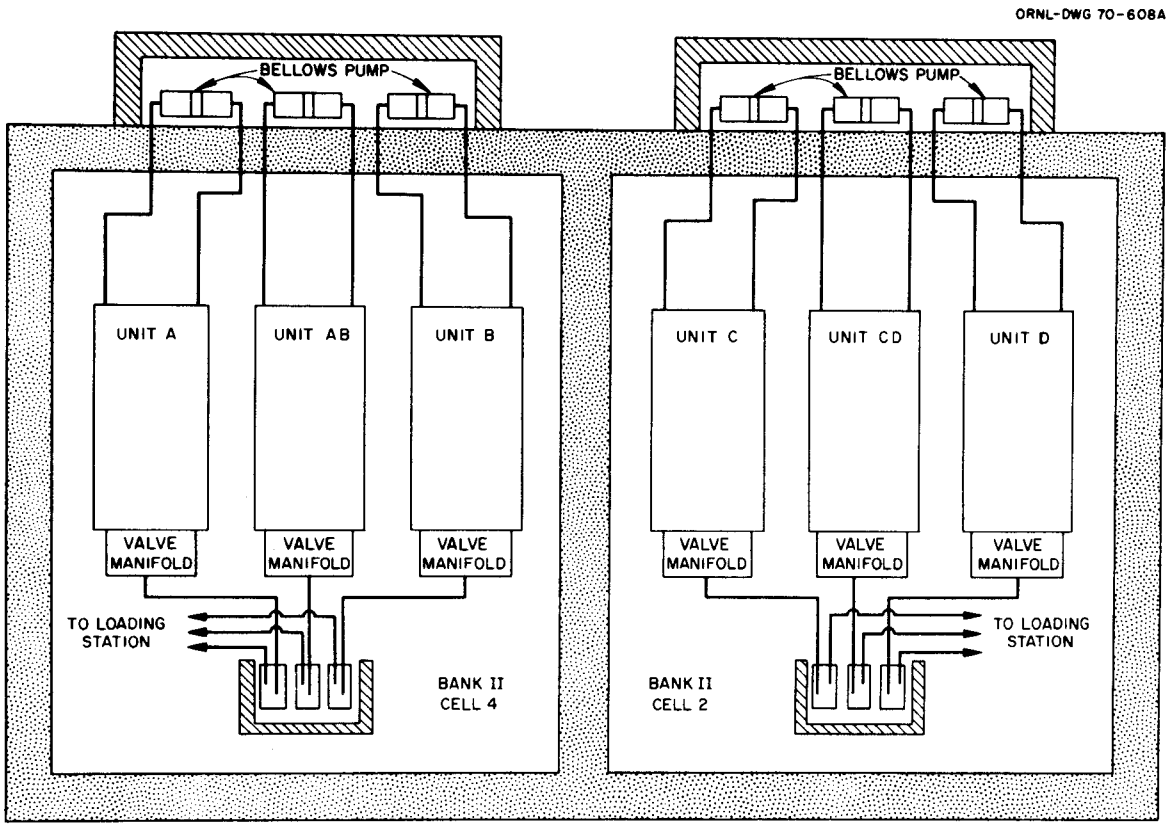

Fig. 2. Schematic Arrangement of Krypton-85 Columns.

B. Cesium-137 Gamma Source Development

Cesium-137 chloride has been the compound of choice for radiation sources in applications of moderate temperature conditions. In many respects cesium chloride is the ideal compound; the cesium weight per unit volume is high, the radiation resistance of the CsCl is excellent, the compatibility with stainless steel at ambient temperatures is excellent, and its preparation is straightforward. However, the projected conditions of use of cesium-137 gamma sources are increasingly severe with respect to temperature, and some applications indicate the need for a cesium source material which has low solubility. In view of these projected conditions of use, the testing of $^{137}CsCl$ at elevated temperatures is being done and the development of a low-solubility, temperature-resistant source form of cesium is being studied.

1. Alternative Cesium-137 Source Form Development

a. Thermal Stability of Cesium Tantalates and Niobates

The behavior of selected cesium tantalate and niobate products in an elevated temperature environment has been investigated using an optical microscope equipped with a high-temperature stage (1350°C maximum) and photographic accessories. This study was carried out to evaluate the thermal stability (up to 1350°C) of cesium tantalates and niobates prepared under various conditions.

In observing the high-temperature behavior, emphasis was placed upon (a) movement of compound particles and temperature at incongruent melting, (b) temperature at completion of melting, and (c) evidence of decomposition. Item (a) is presumably related to chemical and physical transformation of the compound. Item (c) is based on the observation of some material deposited on the window of the high-temperature stage, but generally it does not seem to be a serious problem. Some irreversible chemical and/or physical transformation must have taken place in several samples during the first heating-cooling cycle since their behaviors in the second cycle were appreciably different from those in the first one. To be consistent in the evaluation, only data based on the first cycle were listed in Tables 5 and 6.

Table 5 indicates that melting points (temperature at complete melting) of all cesium tantalates, except samples M5 and M14, are in excess of 1350°C. Runs with short slurry reaction times (i.e., without a reflux condenser) resulted in products with low melting points (samples M5 and M14). There does not appear to be any definite relation between the Ta/Cs ratio (from 0.9 to 1.6) and the melting point in the range shown. However, compounds with low Ta/Cs ratios (corresponding to low calcining temperature) tend to display some degree of thermal instability, i.e., low melting point (sample M14), incongruent melting (sample JE3A), and thermal decomposition (samples JE1, JE2A, JE2B, M3, and JE3B). In general, products from the $CsOH-Ta_2O_5$ reaction seem to be somewhat less stable than those from the $Cs_2CO_3-Ta_2O_5$ reaction.

Table 5. Characteristics of Various Cesium Tantalate Products

Sample Number[a]	Calcining Temp (°C)	Mole Ratio H_2O/Ta_2O_5 (Initial)[c]	Atomic Ta/Cs Ratio	Sea Water Insolubles (wt %)	Melting Temp (°C)		Evidence of Decomposition Before Melting	Volumetric Spec. Act. (Ci/cm^3)[d]
					Incongruent	Complete		
Molten $CsOH-Ta_2O_5$ Reaction Product								
JE1	750	Very low	0.89	80.9	-	>1350	750-920°C	82.3
M11	1000	Very low	1.28	93.7	-	>1350	None	67.8
$CsOH-Ta_2O_5$ Slurry Reaction Product								
M5	750	High	1.18	84.9	-	1015	None	71.7
JE2A	750[b]	Very high	1.11	57.9	-	>1350	600-950°C	73.4
JE2B	750[b]	Very high	1.12	86.3	-	>1350	700-900°C	72.9
M3	750	Medium	1.10	88.3	-	>1350	∿1100°C	73.5
M4	1000	Medium	1.46	89.0	-	>1350	∿1100°C	62.7
$Cs_2CO_3-Ta_2O_5$ Slurry Reaction Product								
M14	750	High	0.92	87.0	-	990	None	81.2
M13	750	Medium	1.10	90.0	-	>1350	None	73.8
JE3A	750[b]	Medium	1.03	-	1000 & 1285	>1350	None	76.4
M15	1000	Medium	1.55	100.0	-	>1350	None	60.5
JE3B	750	Medium	1.03	86.8	-	>1350	1190°C	76.4

[a]Reaction for M5 and M14 was carried out without a reflux condenser. Reaction time for JE2B and JE3B was twice as long as that for JE2A and JE3A.
[b]In nitrogen atmosphere.
[c]Includes water produced in the reaction.
[d]Estimated - assume an isotopic purity of 36.5% cesium-137. The volumetric specific activity of $^{137}CsCl$ gamma source is approximately 100 Ci/cm^3.

Table 6. Characteristics of Various Cesium Niobate Products

Sample Number[a]	Calcining Temp (°C)	Mole Ratio H_2O/Nb_2O_5 (Initial)[b]	Atomic Nb/Cs Ratio	Sea Water Insolubles (wt %)	Melting Temp (°C)		Evidence of Decomposition Before Melting	Volumetric Spec. Act. (Ci/cm^3)[c]
					Incongruent	Complete		
				Molten $CsOH-Nb_2O_5$ Reaction Products				
JE4	700-1000	Very low	0.54	55.9	-	790	None	89.6
				$CsOH-Nb_2O_5$ Slurry Reaction Products				
JE5	700	High	1.45	-	-	885	None	64.9
JE6	1000	High	1.40	92.0	400, 650	880	None	65.8
JE7A	500	Very high	1.79	-	885	925	None	59.8
JE8A	700	Very high	1.54	-	495, 550, 885	1005	900°C	63.4
JE9B	1000	Very high	1.56	66.8	510, 875	1220	None	63.2
JE8B	700	Medium	1.36	-	500, 600, 850 960, 1025, 1100	1340	None	66.6
JE8C	700	Medium	1.49	-	875, 1005	1325	None	64.3

[a]Reaction time for JE8B and JE9B was twice that for JE7A and JE8A. Reaction time for JE8C was longer than JE8B.
[b]Includes water produced in the reaction.
[c]Estimated - assume an isotopic purity of 36.5% cesium-137. The volumetric specific activity of $^{137}CsCl$ gamma source is approximately 100 Ci/cm^3.

The lower degree of thermal stability of cesium niobates as compared with cesium tantalates is obvious by referring to Tables 5 and 6. Especially notable is the presence of several incongruent melting temperatures for most cesium niobate products. The melting point of cesium niobates (in the range 790-1340°C) appears to increase with increasing calcining temperature (samples JE7A, JE8A, and JE9B). A prolonged slurry reaction time tends to render the product thermally more stable (compare JE8A, JE8B, and JE8C).

b. Consolidation of Pertinent Characteristics

In addition to the data characterizing the degree of thermal stability, Tables 5 and 6 also list other types of data that are important in the evaluation of cesium tantalates and niobates as potential cesium-137 gamma sources. The stability of product in aqueous solution (includes sea water) as influenced by various reaction parameters has already been discussed.[8] The volumetric specific activity (Ci/cm^3) may be used as one of the key parameters expressing the efficiency of an irradiator and was computed for various stoichiometries corresponding to selected cesium tantalate and niobate products. In the computation, an isotopic purity of 36.5% cesium-137 was assumed and estimated values of density were used for various compounds.

As illustrated in Table 5, the volumetric specific activity of cesium tantalates ranges from 60-82 Ci/cm^3. It is primarily governed by the overall stoichiometry (i.e., Ta/Cs ratio) of the product which, in turn, is strongly influenced by the calcining temperature. For products from the molten $CsOH$-Ta_2O_5 and Cs_2CO_3-Ta_2O_5 reactions, the amount of sea water insolubles is favored by a high Ta/Cs ratio which results in a lower specific activity. An almost insoluble cesium tantalate product (>90% sea water insolubles) with a high degree of thermal stability (melting point >1350°C) and a high specific activity (>67 Ci/cm^3) can be prepared either by the molten $CsOH$-Ta_2O_5 reaction or by the Cs_2CO_3-Ta_2O_5 slurry reaction.

For cesium niobates, the trend in the variation of specific activity (from 60-90 Ci/cm^3) with the overall product stoichiometry (Nb/Cs ratio) is the same as that for the tantalates. However, no simple relation is apparent from Table 6 between the stoichiometry, the amount of sea water insolubles, and the thermal stability. It does not seem possible to eliminate the phenomenon of incongruent melting in the cesium niobate product having a high melting point (>1300°C).

c. Assessment of Cesium Tantalates and Niobates as Cesium-137 Gamma Sources

Both cesium tantalates and niobates have good potentials as alternative cesium-137 gamma sources. The volumetric specific activity of these compounds (60-82 Ci/cm^3) compares favorably with that of $^{137}CsCl$ gamma

---

[8] A. F. Rupp, *Radioisotope Program (8000) Progress Report for May 1971*, ORNL-TM-3461, Oak Ridge National Laboratory.

source (∿100 Ci/cm^3). They exhibit a considerably higher degree of insolubility than CsCl in an aqueous solution as well as better stability in a high temperature environment. Cesium tantalates appear to be especially attractive in view of the feasibility of obtaining a product having a specific activity greater than 70 Ci/cm^3, with extremely low solubility and with a melting point in excess of 1350°C.

Preparation of cesium niobates with the temperature at complete melting as high as 1325°C and having a specific activity of ∿64 Ci/cm^3 is also feasible. However, the condition of incongruent melting in the high-temperature range (875-1325°C) may present some problems, e.g., compatibility of the melt with the source container material, development of appreciable vapor pressure in the container, etc.

C. Cesium-137 Pilot Production (Production and Inventory Accounts)

1. Processing and Process Status

Since line checks failed to disclose a leak in the cesium-137 processing system, the system was checked out and cesium-137 processing was started. The first material processed was 3,500 gal of dilute feed containing 33,500 Ci of cesium-137. This was processed in 14 batches with a total waste loss of 240 Ci. Processing of the concentrated feed resulting from the unloading of the HAPO-IC-1 cask was then started.

Glassware equipment for cesium-137 final processing was set up in the manipulator cells. This will be used first for reprocessing some ^{137}CsCl (∿50,000 Ci) which is contaminated with sulfate; then final processing of the new cesium-137 feed will be started. The current cesium-137 process status is as follows:

Item	Cesium-137 (Ci)
In-process material	658,000
^{137}CsCl product	17,000
Sources in fabrication	3,000
Completed sources awaiting shipment	46,500

2. Operational Summary

Item	June 1971		FY 1971	
	No.	Amount (Ci)	No.	Amount (Ci)
HAPO shipments received	0	0	1	388,200
Product batches prepared	0	0	0	0
Sources fabricated	0	0	62	43,400
Special form containers loaded	10	98,400	27	297,200
Sources shipped	0	0	283	163,300
Special form containers shipped	10	98,400	31	298,200

3. Current Orders

Current orders for cesium-137 as sources or bulk powder are shown below:

Customer	Amount (Ci)	Estimated Shipping Date
J. L. Shephard and Associates	7,050	July 1971
Atomic Energy of Canada Limited	1,500	July 1971
Laboratorio de Dilucion de Radio., Mexico	14	July 1971
Radiochemical Centre, England	500	July 1971
American Hoechst Corporation	5	July 1971
Lockheed-Georgia Company[a]	∿35,000	August 1971
Brookhaven National Laboratory	203,000	FY 1972
Total	247,069	

[a]The cesium-137 activity to be supplied by Lockheed-Georgia Company.

An order is on hand from AECL for approximately 154,300 Ci as bulk powder or sources to be scheduled and shipped as released by the customer.

4. Source Fabrication

An order for 200,001 Ci of $^{137}CsCl$ for CEA-France was completed during June. The first portion of this order (101,583 Ci) was shipped in April 1971. The portion shipped in June contained approximately 98,420 Ci in 10 powder cans.

D. Strontium-90 Pilot Production (Production and Inventory Accounts)

1. Processing and Process Status

The HAPO-IB-1 cask received in May was unloaded, rinsed, dried, sealed, tested, and returned to ARHCO. Except for some minor difficulties with one of the process connections and an unusually difficult decontamination effort, the handling aspects of the shipment were in line with previous experience. The only significant difference in the unloading phase was that the strontium-90 slurry did not begin to come out of the cask immediately when the water was started through. In past unloadings, indication of strontium-90 removal was seen almost from the start, and removal was essentially complete after about 25 gal of water flow. In this case, the strontium-90 removal was slower and more uniform, and complete removal (as indicated by in-line radiation detector and filter temperature) was not achieved until well into the acid cycle of the first pass. This effect caused no problems. The unloading sequence was as follows:

Operation	Solutions	Strontium-90 (Ci)
First Pass	100 gal demineralized water followed by 100 gal 1.5 *M* HNO_3	535,150
Second Pass	50 gal 2 *M* HNO_3 followed by 50 gal demineralized water	300
Filter Backwash	50 gal demineralized water	50
Rinse	50 gal demineralized water	-

The efficiency of unloading on the first pass was quite high. Previous unloadings have resulted in amounts as high as 5% of the total strontium-90 in the second pass.

Analysis of the solution showed that the only radiochemical contaminant was cerium-144 at a ratio of 0.0032 Ci per curie strontium-90.

The current strontium-90 process status is as follows:

Item	Strontium-90 (Ci)
In-process material	960,000
Strontium-90 products	440,000
Sources in fabrication	0
Returned SNAP sources	291,000
Completed sources awaiting shipment	109,000
	1,800,000

The two out-of-service hot presses (induction heated and resistance heated) were dismantled remotely and all removable parts were discarded. Large parts (frames, etc.) were cleaned and will be removed from the cells at the first opportunity. Since the manipulator cells will be used for cesium-137 final processing for the next several weeks, installation of new hot presses will be delayed until completion of the current cesium-137 campaign.

2. Operational Summary

Item	June 1971		FY 1971	
	No.	Amount (Ci)	No.	Amount (Ci)
HAPO shipments received	0	0	1	535,500
Product batches prepared	0	0	20	695,000
Sources completed	4	427,100	23	1,225,800
Special form containers loaded	0	0	25	53,400
Shipments to customers	4	427,100	33	1,223,800

3. Current Orders

Current orders for strontium-90 as sources or bulk powder are as follows:

Customer	Amount (Ci)	Estimated Shipping Date
U. S. Navy	208,000	a
U. S. Navy	424,000	June 1971
U. S. Navy	29,000	b
U. S. Navy	300,000	b
Gulf Energy & Environmental Systems	14,500	b
Aktiebolaget Atomenergi, Sweden	500	July 1971
Total	976,000	

[a]Further work and subsequent shipment are pending receipt of instructions from customers.
[b]Material is ready for shipment, awaiting receipt of confirmation of license.

4. Source Fabrication

Attempts to use welding parameters developed by the customer (Teledyne) failed. A weld procedure using a plasma-arc method instead of TIG was developed by ORNL personnel and was used to complete the welding of the four Sentinel-25 sources. The plasma-arc method resulted in weld penetration in excess of 0.100 in., well above the 0.055 in. required. The sources were leak tested, and shipment was made on June 28.

The two SNAP-21 sources for the Navy were loaded into generators on May 19 and 20. Personnel from 3M Company connected the units and ran preliminary check out of the equipment. The generators are stored in their shipping containers awaiting shipping instructions from the Navy.

A third test of heating a SNAP-21 liner using internal heaters was conducted. These tests (two of which were reported last month) were run to determine if heat alone was sufficient to cause the thin-walled liners to swell. The third test was run at 740°C for 24 hr. The open end of the liner was 0.01006 in. out of round at the end of the test. As in the previous tests, the liner dimensions were taken at the cold (room temperature) condition.

E. Strontium Pellet Vacuum Hot Press

The $SrO-TiO_2$ powder used in pressing pellets 6-9 was discussed briefly last month. The intention was to produce a mixture of Sr_2TiO_4 and $SrTiO_3$. However, an x-ray spectroscopy analysis of pellets 6 through 9 revealed the presence of $Sr_3Ti_2O_7$ in significant amounts, 60 to 95%. This would explain the lower density and different physical appearance found in each of these pellets. The results of the x-ray analysis are contained in Table 7.

Table 7. X-Ray Spectroscopy of $SrO-TiO_2$ Pellets

Sample	Report
Pellet No. 1	$SrTiO_3$ present greater than 90%
Pellet No. 6 Calcined at 1100°C	$Sr_3Ti_2O_7$ present 60-90%
Pellet No. 8 Calcined at 1200°C	$Sr_3Ti_2O_7$ present 60-90%
Pellet No. 9[a] Calcined at 1300°C	Dark - $SrTiO_3$ present 75-95% $Sr_3Ti_2O_7$ possibly present 5-15%
	Light - $SrTiO_3$ present 30-70% $Sr_3Ti_2O_7$ present 30-70%

[a]Pellet 9 was a light colored pellet with a concrete-like appearance; the dark material existed as an aggregate.

From a $SrO-TiO_2$ phase diagram,[9] it is seen that a mixture rich in SrO will form Sr_3TiO_5, Sr_2TiO_4, $Sr_3Ti_2O_7$, and $Sr_4Ti_3O_{10}$. A 50-50 mixture of SrO and TiO_2 would result in $SrTiO_3$. By keeping the mixture slightly rich in TiO_2, the only strontium compound which should form is $SrTiO_3$. Apparently the mixture used in pellets 6 through 9 favored the formation of $Sr_3Ti_2O_7$ over Sr_2TiO_4 with very little $SrTiO_3$ being formed.

Two fresh batches of $SrO-TiO_2$ were made using a TiO_2-rich mixture. Pellets 10, 11, and 12 were made from the first batch and pellet 13 was made from the second. Pellet 14 was made from a third batch which contained the stoichiometric amount of TiO_2 to convert the SrO to $SrTiO_3$. A discussion of the pellets follows:

Pellet 10 - This pellet was made from the same amounts of $SrNO_3$ and $(NH_4)_2CO_3$ as pellets 6 through 9, but the TiO_2 content was increased to provide a 10% excess over the stoichiometric quantity required to convert the SrO to $SrTiO_3$. During pressing, the pellet was heated to about 1350°C at a pressure of 4500 psi.

The pellet weighed 392 g (excluding the nickel screen) and had a volume of 79.8 cm^3 corresponding to a density of 4.91 g/cm^3. This is the densest pellet pressed to date and contains no noticeable cracks.

Pellet 11 - Pellet 11 was made in the same way as pellet 10 except 495 g of material was used (compared with 392 g in pellet 10). The pellet was pressed at 4500 psi and 1350°C. The density of the pellet was 4.76 g/cm^3, and the pellet was extensively cracked (about 1/10 of the pellet flaked off).

[9]A. Cocco and Franco Massezza, *Ann. Chim. (Rome)* 53, 883-93 (1963) and ORNL-tr-1819.

Pellet 12 - Pellet 12 was made from both the first batch of material used in pellets 10 and 11 (90%) and the second batch of material which was made the same way. The second batch of material was added to the top of the prepressed first batch and prepressed also. The resulting pellet was pressed at 4500 psi and 1360°C. The top 1/8 in. of the pellet was a light colored material with poor adhesion to the rest of the pellet. The remaining 1-1/8 in. of the pellet had the characteristic blackness of $SrTiO_3$. The pellet weighed 606 g and had a density of 4.82 g/cm^3. The significance of this hybrid type pellet is that two batches of material, made up in the same manner, calcined at the same temperature (1100°C) for approximately the same length of time (16 hr), and pressed under identical conditions could result in two different materials. The light colored material had the same general characteristics as the $Sr_3Ti_2O_7$ found in pellets 6 through 9.

Pellet 13 - This pellet was made from the same material as the top of pellet 12 to confirm the difference. The pellet was pressed at 4500 psi and 1370°C. It had a light gray appearance and weighed 417 g with a density of 4.17 g/cm^3. There were no cracks evident in the pellet.

Pellet No. 14 - A new batch of SrO-TiO_2 was made using the stoichiometric amount of TiO_2 with no excess. The material was calcined at 1200°C for 16 hr. No screens were used to reduce cracking. The pellet was pressed at 1360°C and 4500 psi. The resulting pellet was light colored, extensively cracked (about 8 pieces), and not very dense. The pellet weighed 396 g with a density of 3.93 g/cm^3.

A summary of the data concerning pellets 10 through 14 is contained in Table 8.

Table 8. Summation of Pellet Pressing Data

Pellet Number	Weight (g)	Volume (cm^3)	Density (g/cm^3)	Pressing Temp (°C)	Comments
10	392	79.8	4.91	1350	Powder made with 10% excess TiO_2 over that required for conversion to $SrTiO_3$. Calcined at 1100°C.
11	495	104	4.76	1350	Same material as pellet 10. Pellet extensively cracked.
12	606	125.6	4.82	1360	Top 1/8 in. material from a second batch made the same way. Different appearance and poor adhesion.
13	417	100	4.17	1370	Second batch of material made the same as pellets 10 through 12. Has appearance of $Sr_3Ti_2O_7$.
14	396	100.8	3.93	1360	Powder made with no excess TiO_2 for conversion to $SrTiO_3$. No screen used. Pellet had $Sr_3Ti_2O_7$ appearance and was extensively cracked.

F. Strontium-90 Beta Source for University of California

A strontium-90 beta source was prepared for the University of California at Los Angeles. The source will be used to irradiate a surgical defect made in the atrial system of the hearts of animals in an experimental program designed to ultimately relieve the effects of pulmonary heart disease in man. The intense beta irradiation is to cause the opening to become permanent.

The source contains a pellet (1.14 mm diam by 14.8 mm long) of strontium-90 silicate (approximately 1.00 Ci) minibeads embedded in an aluminum matrix. The pellet was fabricated by centrifugally forcing molten aluminum around the strontium silicate minibeads held in a graphite mold. The capsule consisted of a 19-mm length of stainless steel tubing (1.5-mm diam and 1-mm wall thickness). One end plug (which was hard-soldered into place) was machined with threads to fit the end of the insertion needle, the other was soft-soldered in place after loading the source pellet. Future plans call for electron or laser beam welding the end plugs if more sources of this type are made.

G. Strontium-90 Silicate Beta Sources Report

The final report for the strontium silicate work is being written with 30% of the first draft completed. All experimental work has been terminated. The first draft should be completed by the end of this fiscal year.

H. Promethium-147 Source Fabrication, Powder Shipment, and Current Orders

One outstanding order for 5001 Ci of promethium-147 will be shipped to Mitsubishi International Corporation when boat booking is received.

I. Short-Lived Fission Products Pilot Production (Production and Inventory Accounts)

Isotope	Number of Batches	Amount (Ci)
Xenon-133	3	∿1300
Iodine-131	1	60
Barium-140	1	14
Strontium-89	1	29

SOURCE DEVELOPMENT - 08-01-04

A. Radioisotope Characterization, Quality Control, and Standards

1. Radioisotope Characterization

The ORNL Nuclear Data Group is attempting to determine the needs for information among specialists in fields other than nuclear physics. About 120 names and addresses were supplied, many being taken from questionnaires obtained in the NRC standards survey. Fields represented were nuclear medicine, radiochemical and activation analysis, reactor technology, environment, and radioisotope production and application.

In selecting parameters characteristic of given nuclides, such as half-lives or gamma percentages, it is frequently necessary to average values reported by different investigators. A weighted average is usually calculated, and the "internal error"[10] is normally derived, which is based on the uncertainties given by the investigators.[11] Alternatively, the "external error,"[10] based on the agreement of the various values, can be used, but its use can lead to a low estimate (e.g., it vanishes if the values happen to agree). It is therefore recommended that the larger of the two estimates of uncertainty be selected, as is the practice of the ORNL Nuclear Data Group.[10]

Interest in production of nickel-59, a long-lived electron-capture nuclide, led to a review of the state of knowledge of its properties. Definitive work[12] of some time ago was found to be consistent with modern practices and assumptions about parameters. Other inquiries were related to alpha-particle excitation of x rays, and gamma spectra of typical fission-iodine mixtures.

2. Radioisotope Special Analysis and Quality Control

The findings and recommendations of the NRC standards panel were cited in a memo from the State Department to IAEA and discussed[13] in the recent national meeting of the American Nuclear Society in Boston. A meeting was held in May at the National Bureau of Standards to explore the NBS plans to implement the panel's recommendations, in collaboration with the NRC standards subcommittee and other interested organizations. An NBS official requested 15 additional copies of the local report of the survey (ORNL-TM-3239), and information based on questionnaires and correspondence was made available to NBS personnel.

At the request of the Division of Isotopes Development, S. A. Reynolds agreed to serve as advisor to the ANS Information Center on Nuclear Standards (ICONS) representing the Isotopes and Radiation Division, and in that capacity attended the standards workshop at the national ANS meeting, at which preliminary organization of the Division's standards subcommittee took place.

---

[10] Anon., *Nuclear Data Sheets* B1(1), iv (1966).
[11] J. Mandel, *The Statistical Analysis of Experimental Data*, Wiley, New York, 1964.
[12] A. R. Brosi *et al.*, *Phys. Rev.* 81, 391 (1951).
[13] L. R. Zumwalt, *Trans. ANS* 14, 124 (1971).

B. Radiation Source Development

1. Krypton-85/Aluminum Sources

Enriched krypton-85 has been deposited into 0.001-in.-thick aluminum foil by ion implantation to a concentration of approximately 1.0 mCi/cm^2. With the activity in the foil, a portion of the beta radiation (0.67 MeV) is absorbed to produce low-energy bremsstrahlung. Much of the beta radiation is allowed to emerge from the foil to furnish a fairly homogeneous beta source. The higher energy photon (0.52 MeV) in the decay of krypton-85 is present only to the amount of 0.42%, and, if sources are fabricated to obtain and use the beta radiation to obtain characteristic x ray, high-energy gamma radiation produces little interference at the x ray.

The krypton-85/aluminum foil was shaped into a 1-in.-diam ring source and placed in annular-shaped tungsten and tin holders (see Fig. 3). From the holder the radiation is collimated upward. With no covering over the top

ORNL-DWG 70-6843R

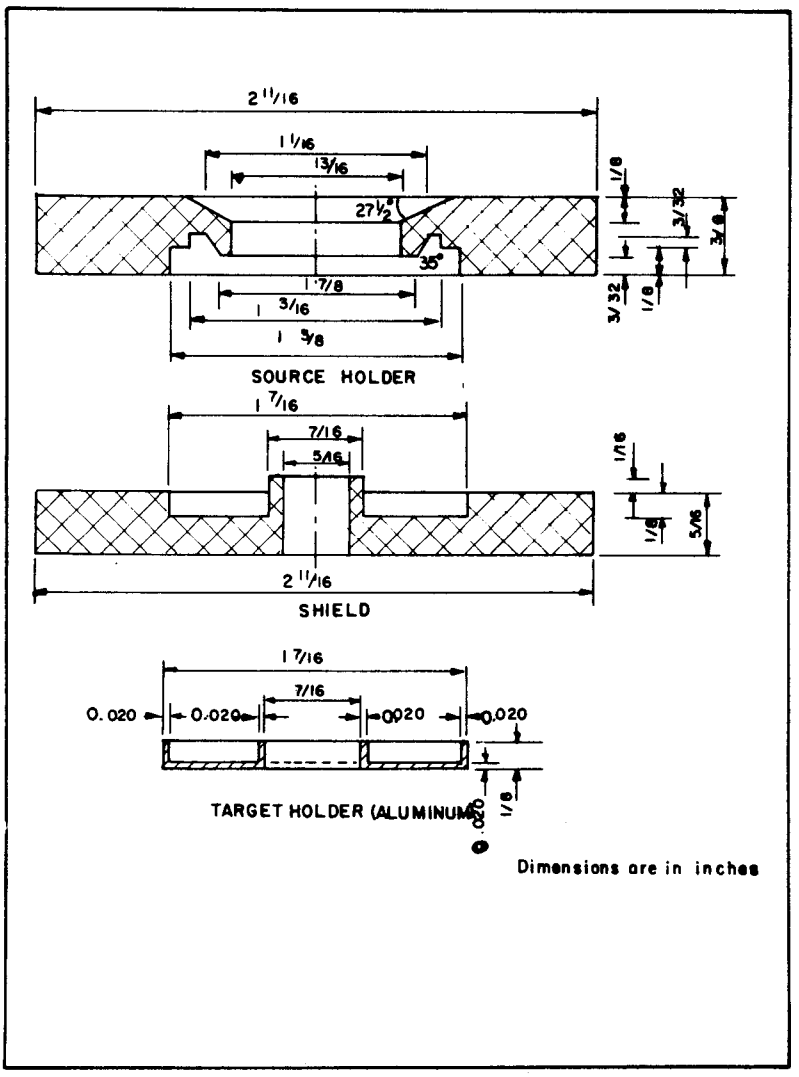

Fig. 3. Fluorescent X-Ray Source and Shield.

of the source, the radiation from the source is mostly the beta radiation from krypton-85. The dose rate from such sources was measured to be 80 to 200 R/hr, as determined by ion changer readings at 1/2 in. from the surface.

The krypton-85 radioactivity is sealed only in the aluminum matrix but there seems to be no contamination problem because no transfer of radioactivity was detected on the outside of the source. Investigations are being made to determine how well the krypton-85 is retained in the aluminum matrix and in the oxide coating on the surface of the aluminum.

The krypton-85/aluminum foil which was placed in an annular-shaped tungsten source holder was covered with a thick annular-shaped shield of tungsten to reduce the background radiation to the detector and also to act as target material to absorb the beta radiation and produce tungsten x rays. Between the two tungsten shields is a ring-like opening through which the produced x ray is allowed to emerge and be collimated upward. In the same manner, the krypton-85/aluminum source can be used to produce different energy x rays by changing the target material.

The tungsten x ray, which is produced by absorbing krypton-85 beta radiation in tungsten target, and krypton-85 beta radiation are both used to produce fluorescent x rays in sample material. The radiation from the source is collimated toward the sample, and a portion of the x ray produced in the source material is detected by the lithium-drifted silicon detector. Samples containing calcium, manganese, tin, chromium, and silver were examined by this method of fluorescent x-ray analysis. Stainless steel could be easily identified by its x-ray spectrum. Of particular interest was the comparison of the radiation energies from iron-55 (manganese x ray) and the manganese x ray produced by absorbing krypton-85 beta radiation in a manganese target. The radiation from the iron-55 source contained less bremsstrahlung and comparatively more of the characteristic x-ray energies.

These studies show the techniques which can be used to produce different x-ray energies. A source can be designed to produce these energies which in turn may be used to excite the fluorescent x rays from the elements in samples of materials. By choosing the energy at the K absorption edge, analyses can be made for specific elements even though the matrix is composed of many different elements. The characteristic x ray can be identified and measured.

The use of krypton-85 beta radiation for exciting the characteristic x ray in sample materials, and particularly the use of krypton-85 in aluminum foil, enables one to obtain a source of beta radiation which is relatively safe, even though it may be used as an uncovered source. The primary radiation is not attenuated and contains comparatively little bremsstrahlung radiation which would interfere in the measurement of the fluorescent x ray.

2. Snow Gage

At the request of the Division of Isotopes Development, we are studying the feasibility of a fly-over snow gage. The desired information is

the water content stored in snow during the winter months in the western mountain regions of the United States. This information is necessary if major floods are to be averted and full utilization is to be made of the water during spring thaw.

The concept under study is to have the passive snow gage system elements in the remote and often inaccessible (during winter) locations and to have the active elements of the system in easy access. To achieve this, a radioactive source would be placed at strategic locations in the mountains and a detection system with appropriate data storage would be placed aboard an airplane. During good flying weather the airplane would be used to monitor the source and determine the mass between the airplane and source. In the initial concept, two sources (cobalt-60 and cesium-137) would be used and the difference in absorption of the different energy peaks would be used as a measure of the mass between the source and detector.

Goals of the study are:

1. Overall feasibility of the concept.

2. Appropriate sources and their location relative to each other.

3. Geometry requirement (minimum and maximum altitudes).

4. Source strength required.

5. Minimum detector and data collection systems required.

Preliminary study indicate that either the cesium-137 source should be replaced with a source in the energy range of 400 keV or the two sources (cesium and cobalt) should be place some distance from each other.

TECHNOLOGY UTILIZATION - 08-01

A. Information Center

In June, 47 requests (a third of them from industry) for information were filled with dispatch of 85 items prepared in the Center. Seven sales letters and the articles listed below were translated. A list of reviews in progress is shown on page 25.

B. Isotopes and Radiation Technology

Isotopes and Radiation Technology 9(1) galley proofing was continued, 9(2) manuscript was completed and sent to DTIE, and writing of 9(3) manuscript was started.

Title	Author(s)	Status (% Complete)
Iodine-125	P. S. Baker and Martha Gerrard	35
Potato Sprout Inhibition by Radiation, Part 2	F. E. McKinney	50
Selected Abstracts of World Literature on Production and Industrial Uses of Radioisotopes, Part 2 of 1971	Martha Gerrard and P. S. Baker	20
Self-Diffusion in Liquids	F. J. Miller	75
Technetium-99m: Preparation and Uses	Martha Gerrard and P. S. Baker	65
Radioisotopes in the Textile Industry	F. J. Miller	90
Grain Disinfestation — A Worldwide Review	F. E. McKinney	20
Presowing Irradiation of Seed	Russian book translated and edited by Martha Gerrard	Final typing being proofed
Iodine-131 Production Methods	French report being translated by Martha Gerrard	References being checked
Radioelectrochemistry	Helen P. Raaen	1st draft completed
Nuclear Methods in Study of Environment	Helen P. Raaen	80
Fruit and Vegetable Bibliography (revision)	F. E. McKinney	Program being debugged
Radioisotope Briefings for Industry — Minerals	R. H. Lafferty	Comments received
Semiconductors	H. P. Raaen	In progress
Special Sources (supplement)	F. E. McKinney	40
Bibliography of DID Contractor Publications	P. S. Baker	25
Use of Isotopes in Monitoring and Control of Environmental Pollution	W. E. Mott and Martha Gerrard	50

C. Publications

R. E. Greene, H. S. Warren, and P. S. Baker, *Patent Literature on Process Radiation and Irradiator Design. Part 1. United States Patents 1950 Through 1968*, ORNL-IIC-34 (June 1971).

G. Courtois, Sediment Dynamics and Radioactive Tracers, Status of Work, *La Houille Blanche* 1970(7), 617-28, translated from French by Martha Gerrard, ORNL-tr-2492.

M. Alquier, G. Courtois, G. Gruat, and G. Sauzey, The "Good Mixing" Concept in the Use of Tracers, *La Houille Blanche* 1970(7), 643-50, translated from French by Martha Gerrard, ORNL-tr-2497.

G. Courtois, M. Gasnier, M. Maire, and M. Scherrer, Study of Displacement of Radioactive Pebbles on the Bruche. Part I., *La Houille Blanche* 1970(7), 651-7, translated from French by Martha Gerrard, ORNL-tr-2498.

A. Caillot, Methods for Labeling Sediments with Radioactive Indicators, *La Houille Blanche* 1970(7), 661-75, translated from French by Martha Gerrard, ORNL-tr-2501.

RADIOISOTOPE SALES

An order was received from Radiochemical Centre, England, for 30,000 Ci of tritium; from U. S. Navy for approximately 329,400 Ci of strontium-90; from J. L. Shepherd and Associates for 6,250 Ci of cesium-137 as encapsulated sources; and from Mitsubishi International Corporation, Japan, for 5,001 Ci of promethium-147.

Shipments made during the month include 1,000 Ci of promethium-147 to Radiochemical Centre, England; 1,000 Ci of promethium-147 to Atomic Energy of Canada Limited; 2,500 Ci of promethium-147 to Minnesota Mining and Manufacturing Company; 98,424 Ci of cesium-137 to CEA, France; 3,000 Ci of tritium to Israel Atomic Energy Commission; and 4,000 Ci of tritium to New England Nuclear Corporation. Other shipments include 143.65 Ci of xenon-133, 7,170 Ci of tritium, 500.99 Ci of krypton-85, and 100 Ci of tritium-helium mixture.

The radioisotope sales proceeds and shipments for the first 11 months of FY 1970 and FY 1971 are given in Table 9.

Table 9. Radioisotope Sales and Shipments

Item	7-1-69 thru 5-31-70	7-1-70 thru 5-31-71
Inventory items	$ 524,589	$ 504,354
Major products	102,764	109,973
Radioisotope services	292,542	241,800
Cyclotron irradiations	128,152	112,062
Miscellaneous processed materials	72,201	59,700
Packing and shipping	67,565	78,750
Total Radioisotope Sales	$1,187,813	$1,106,639
Total Number of Shipments	2,317	2,854

ADMINISTRATIVE

Visitors to the IDC and travel by IDC personnel are given in Tables 10 and 11.

Table 10. Visitors to IDC

Affiliation	Purpose of Visit
Clemson University Clemson, South Carolina	Hydrology (tracer) experiments
Edvard-Zintl-Institut Darmstadt, West Germany	Discuss radionuclides of interest as energy sources
Euratom, Ispra, Italy	Tour Isotopes Information Center

Table 11. Travel of IDC Personnel

Site Visited	Purpose of Visit
Savannah River Laboratory Aiken, South Carolina	Discuss use of x-ray equipment with SRL personnel
AEC, Washington, D. C.	Assist DID in preparing a booklet on isotopes for Geneva Conference
Washington, D. C.	Attend Transportation Association of America Forum
Los Angeles, California	Attend 18th Annual Meeting of Society of Nuclear Medicine
Boston, Massachusetts	Participate in standards workshop
Boston, Massachusetts	Attend ANS meeting
Palm Beach, Florida	Attend Annual Meeting of Institute of Nuclear Material Management

PUBLICATIONS

JOURNALS

E. G. Bell, R. E. O'Mara, C. A. Henry, G. Subramanian, J. G. McAfee, and L. C. Brown, Non-Neoplastic Localization of ^{67}Ga-Citrate, *J. Nucl. Med.* 12(6), 338-9 (June 1971).

B. Leonard Holman, Douglass F. Adams, Per Eldh, S. J. Adelstein, and J. Kenneth Poggenburg, Assessment of Myocardial Perfusion and Viability with ^{43}K, *J. Nucl. Med.* 12(6), 366-7 (June 1971).

D. J. McMillan, J. H. Hamilton, and J. J. Pinajian, Energy Levels in ^{156}Gd Populated by 5.4-day ^{156}Tb, *Phys. Rev. Abstracts* 2(12), 22 (1971).

J. K. Poggenburg, ^{43}K: The Reactor Production, Physical Properties, and Potential Availability of a Useful Radioisotope, *J. Nucl. Med.* 12(6), 457 (June 1971).

Robert O. Smith, Patrick H. Lehan, Harper K. Hellems, and J. Kenneth Poggenburg, Limitation of the Bolus Isotope Infusion for Myocardial Scanning - A Possible Solution, *J. Nucl. Med.* 12(6), 394-5 (June 1971).

Robert O. Smtih, Patrick H. Lehan, Harper K. Hellems, and J. Kenneth Poggenburg, Scatter Problem When Counting the Lower Energies of ^{43}K, *J. Nucl. Med.* 12(6), 464 (June 1971).

REPORTS

E. Lamb, *ORNL Isotopic Power Fuels Quarterly Report for Period Ending March 31, 1971*, ORNL-4692, Oak Ridge National Laboratory.

E. Lamb, *Isotopic Power Fuels Monthly Status Report for May 1971*, ORNL-CF-71-6-27, Oak Ridge National Laboratory.

A. F. Rupp, *Radioisotope Program (8000) Progress Report for May 1971*, ORNL-TM-3461, Oak Ridge National Laboratory.

TRANSLATION

W. Görner, The Burn-Out of Cadmium Shields, *Kernenergie* 11, 249-52 (1968), translated from German by J. J. Pinajian, ORNL-tr-2488.

INTERNAL DISTRIBUTION

1. A. L. Allen
2. M. A. Baker
3. P. S. Baker
4. E. E. Beauchamp
5. G. E. Boyd
6-8. T. A. Butler
9. F. N. Case
10. W. R. Casto
11. J. A. Cox
12. F. L. Culler
13. W. C. Davis
14. J. S. Drury
15. J. H. Gillette
16. H. R. Gwinn
17. R. F. Hibbs
18. K. E. Jamison
19. Lynda Kern
20. E. H. Kobisk
21. E. Lamb
22. R. E. Leuze
23. J. L. Liverman
24. L. O. Love
25. W. S. Lyon
26. R. E. McHenry
27. F. M. O'Hara
28. W. W. Parkinson
29. J. J. Pinajian
30. M. E. Ramsey
31. S. A. Reynolds
32-33. R. A. Robinson
34. D. A. Ross
35. A. F. Rupp
36. R. W. Schaich
37. A. H. Snell
38. K. A. Spainhour
39. M. R. Skidmore
40-41. H. F. Stringfield
42. D. B. Trauger
43. A. M. Weinberg
44. J. C. White
45-46. Central Research Library
47. Document Reference Section
48-52. Laboratory Records Department
53. Laboratory Records - RC

EXTERNAL DISTRIBUTION

54. G. A. Andrews, ORAU, Medical Division, Oak Ridge, Tennessee
55. Hal Atkins, Brookhaven National Laboratory, Upton, New York
56. D. S. Ballantine, AEC, Washington, D. C.
57-60. R. F. Barker, AEC, Washington, D. C.
61. N. F. Barr, AEC, Washington, D. C.
62. O. M. Bizzell, AEC, Washington, D. C.
63. C. R. Buchanan, AEC, Washington, D. C.
64. R. L. Butenhoff, AEC, Washington, D. C.
65. T. D. Chikalla, PNL, Richland, Washington
66. D. F. Cope, AEC Site Representative ORNL
67. J. C. Dempsey, AEC, Washington, D. C.
68. W. K. Eister, AEC, Washington, D. C.
69. E. E. Fowler, AEC, Washington, D. C.
70. J. D. Goldstein, AEC, Washington, D. C.
71. A. Gottschalk, Argonne Cancer Research Hospital, Chicago, Illinois
72. F. D. Haines, AEC, Washington, D. C.
73-75. J. E. Hansen, PNL, Richland, Washington
76. J. W. Irvine, MIT (Consultant)
77. J. Lawrence, Lawrence Radiation Laboratory, Berkeley, California
78. J. E. Machurek, AEC, Washington, D. C.
79. J. N. Maddox, AEC, Washington, D. C.
80. J. C. Malaro, AEC, Washington, D. C.
81. W. E. Mott, AEC, Washington, D. C.
82. J. A. Powers, AEC, Washington, D. C.

83. G. J. Rotariu, AEC, Washington, D. C.
84. B. A. Ryan, AEC, Richland, Washington
85. W. D. Sandberg, AEC, Aiken, South Carolina
86. S. J. Seiken, AEC, Washington, D. C.
87. R. W. Shivers, AEC, Washington, D. C.
88. F. J. Skozen (Krizek), Argonne Cancer Research Hospital, Chicago
89. P. E. Smith, ARCHO, Richland, Washington
90. L. G. Stang, Jr., BNL, New York
91-96. D. H. Turno, SRL, Aiken, South Carolina
97. A. R. Van Dyken, AEC, Washington, D. C.
98. Laboratory and University Division
99-100. Divison of Technical Information Extension