CENTRAL RESEARCH LIBRARY
DOCUMENT COLLECTION

OAK RIDGE NATIONAL LABORATORY
operated by
UNION CARBIDE CORPORATION • NUCLEAR DIVISION
for the
U. S. ATOMIC ENERGY COMMISSION

LOCKHEED MARTIN ENERGY RESEARCH LIBRARIES
3 4456 0514640 0

ORNL-TM-3611

cy. 44

RADIOISOTOPE PROGRAM (8000) PROGRESS REPORT FOR SEPTEMBER 1971

A. F. Rupp

[redacted]

OAK RIDGE NATIONAL LABORATORY
CENTRAL RESEARCH LIBRARY
DOCUMENT COLLECTION
LIBRARY LOAN COPY
DO NOT TRANSFER TO ANOTHER PERSON
If you wish someone else to see this document, send in name with document and the library will arrange a loan.
UCN-7969
(3 3-67)

NOTICE This document contains information of a preliminary nature and was prepared primarily for internal use at the Oak Ridge National Laboratory. It is subject to revision or correction and therefore does not represent a final report.

This report was prepared as an account of work sponsored by the United States Government. Neither the United States nor the United States Atomic Energy Commission, nor any of their employees, nor any of their contractors, subcontractors, or their employees, makes any warranty, express or implied, or assumes any legal liability or responsibility for the accuracy, completeness or usefulness of any information, apparatus, product or process disclosed, or represents that its use would not infringe privately owned rights.

ORNL-TM-3611

Contract No. W-74-5-eng-26

Isotopes Development Center

RADIOISOTOPE PROGRAM (8000) PROGRESS REPORT FOR SEPTEMBER 1971

A. F. Rupp

Work Sponsored by
AEC Division of Isotopes Development

OCTOBER 1971

OAK RIDGE NATIONAL LABORATORY
Oak Ridge, Tennessee 37830
operated by
UNION CARBIDE CORPORATION
for the
U.S. ATOMIC ENERGY COMMISSION

LOCKHEED MARTIN ENERGY RESEARCH LIBRARIES

3 4456 0514640 0

CONTENTS

Page

RADIOISOTOPE PRODUCTION AND MATERIALS DEVELOPMENT 1

REACTOR-PRODUCED ISOTOPES - 08-01-01 1

A. Biomedical Radioisotopes 1

1. Phosphorus-33 1
2. Potassium-43 2

B. Isotopic Power 3

1. Thulium-170 3

C. Rare-Earth Radionuclides 4

1. Europium-152 4
2. Terbium-156 7

D. Reactor Products Pilot Production 7

ACCELERATOR-PRODUCED ISOTOPES - 08-01-02 8

A. Biomedical Radioisotopes 8

1. Gallium-67 8
2. Indium-111 8

B. Accelerator Pilot Production 9

FISSION PRODUCTS - 08-01-03 10

A. Krypton-85 Enrichment 10

B. Cesium-137 Gamma Source Development 11

1. Alternative Cesium-137 Source Form Development 11

C. Cesium-137 Pilot Production 13

1. Processing and Process Status 13
2. Operational Summary 14
3. Current Orders 14
4. Source Fabrication 14

D. Strontium-90 Pilot Production 15

1. Processing and Process Status 15
2. Operational Summary 16
3. Current Orders 16

Page

E. Strontium Pellet Hot Press 17

1. Pellet Pressing 17
2. Dry Mixing of $SrCO_3$ and TiO_2 17

F. Short-Lived Fission Products Pilot Production 19

SOURCE DEVELOPMENT - 08-01-04 19

A. Radiation Processing 19

1. Radiolytic Oxidation of Dye Waste Solution 19
2. Treatment of Bleach Plant Effluent in Dynamic System . 20

B. Radioisotope Characterization, Quality Control, and Standards 20

1. Radioisotope Characterization 20
2. Radioisotope Special Analysis and Quality Control . . . 21

C. Radioisotope Safety 21

1. Luminous Light Sources 21
2. Tritium Foil Study 23

TECHNOLOGY UTILIZATION - 08-01-05 24

A. Information Center 24

B. Isotopes and Radiation Technology 25

C. Publication 25

RADIOISOTOPE SYSTEMS DEVELOPMENT 25

OCEANOGRAPHIC AND NATURAL RESOURCES DEVELOPMENT - 08-03-02 . . 25

A. Sand Transport Study 25

1. Point Mugu Experiment 25
2. Technical Service Unit Status 26
3. RIST Plug Model for Volume Rate of Sand Transport . . . 27

RADIOISOTOPE SALES 28

ADMINISTRATIVE 29

PUBLICATIONS 30

RADIOISOTOPE PROGRAM (8000) PROGRESS REPORT FOR SEPTEMBER 1971

A. F. Rupp

RADIOISOTOPE PRODUCTION AND MATERIALS DEVELOPMENT

REACTOR-PRODUCED ISOTOPES - 08-01-01

A. Biomedical Radioisotopes

1. Phosphorus-33

The purpose of this project is to develop methods of preparing hundred-millicurie quantities of carrier-free phosphorus-33 containing $\leq 5\%$ phosphorus-32. The two methods of producing phosphorus-33 being evaluated are based on the irradiation of highly enriched targets of sulfur-33 (>92 at. %) or chlorine-36 (approximately 63 at. %) in a fast neutron flux. Phosphorus-33 (25.2 days; 0.248-MeV β^-_{max}) has both a longer half-life and a lower energy beta than phosphorus-32 (14.3 days; 1.709-MeV β^-_{max}), which makes it advantageous for autoradiography, longer ecological and agricultural experiments than with phosphorus-32, synthesis of tagged complex organophosphorus compounds, and double labeling experiments.

The $K_2{}^{33}SO_4$ target discharged last month was processed. The calculated activity of the 0.83-g target was 0.84 Ci phosphorus-33 after a 2-month irradiation. The remnants of a previous product (approximately 150 mCi) were recalled from sales inventory and added to the material in process for further removal of trace gamma activities. As of September 7 a final product of 0.59 Ci phosphorus-33 was placed in sales inventory. The phosphorus-32 content was 4.9%; the gamma activity measured as percentage of total activity was 0.12% chromium-51 and $\sim$0.0005% scandium-46.

Chromium-51 has been a persistent radiocontaminant in phosphorus-33 products, especially those produced from $K_2{}^{33}SO_4$ targets. The chromium is present as Cr(VI) and follows the $^{33}PO_4{}^{3-}$ in the process. A procedure was tested for removing the chromium-51 by reducing the Cr(VI) to Cr(III) with H_2SO_3, boiling to remove excess SO_2, and then removing Cr(III) on a cation column. The results showed approximately 95% recovery of phosphorus-33 with 91% removal of the chromium-51 activity.

The $K_2{}^{33}SO_4$ target dissolver had a high radiation field due to cumulative activation of traces of cesium. The target was found to contain about 17 mCi cesium-134 and about 14 mCi cesium-136. The target will be processed by ion exchange to remove the cesium before it is reirradiated. Work is also in progress on preparing more $K^{36}Cl$ targets from material which had been irradiated 10 years and the chlorine enriched to approximately 47%

chlorine-36; about 25 g KCl was processed. The potassium, which was 3% in potassium-40, was isolated and about 18 g KCl was recovered for feed material for calutron enrichment.

2. Potassium-43

The objectives of this project are: to prepare potassium-43 by the $^{43}Ca(n,p)^{43}K$ reaction, using isotopically enriched ^{43}CaO targets, in quantities sufficient for medical and biological experiments; to define a method for separating potassium-43 from the target in a purity suitable for medical use; and to establish cooperative programs with medical institutions interested in evaluating its usefulness. Potassium-43, with a half-life of 22.5 hr and gamma-ray emissions of 0.373 and 0.617 MeV, is potentially useful for metabolic and clinical studies of blood flow, rejection of transplanted organs, and kidney function because the dose rate would permit multiple doses.

Two batches of potassium-43 were made. Data for the runs are summarized in Tables 1 and 2.

Shipments were made under our medical cooperative programs to Johns Hopkins Medical Institution, Peter Bent Brigham Hospital, University of Mississippi Medical Center, and University Hospitals of Cleveland. Orders were also filled for National Institutes of Health and V. A. Center, Wood, Wisconsin. The cooperative research programs under which excess material was distributed without charge have been scheduled for termination. Letters were sent out advising that effective in October potassium-43 will be available on a batch-cost basis of $2,000 for a nominal 20-mCi batch with shipments scheduled every two weeks. The schedule will be increased to once a week as soon as orders justify. Standing orders are already in hand for 50% of each batch with verbally promised standing orders for another 25%. Preliminary results in myocardial scanning have been promising enough that several clinical testing programs have been started. A weekly schedule is eagerly desired by customers engaged in clinical testing programs, particularly NIH and Johns Hopkins.

Table 1. Yield of Potassium-43 from Calcium-43 Targets

	Target 386	Target 410
Weight ^{43}CaO (mg)	226[a]	186[b]
Irradiation time (hr)	57.1	65.2
Product delivery date	8/24/71	9/14/71
Total product at 8:00 AM on delivery date (mCi)		
Potassium-43	13.9	9.5
Potassium-42	1.9 (13.9%)	1.2 (13.2%)

[a]49% calcium-43 recovered in July 1971.
[b]49% calcium-43 recovered September 9, 1971.

Table 2. Radionuclides Found in Dissolver Sample by Gamma Scanning

Radionuclide	Half-Life	Activity at Discharge[a] (mCi)		Activity Concentration at Discharge (μCi/mg of target)	
		Target 386	Target 410	Target 386	Target 410
Potassium-43	22.5 h	31.4	22.5	143	121
Potassium-42	12.4 h	8.5	5.5	38	29
Sodium-24	15.0 h	2.6	2.9	12	16
Manganese-56	2.58 h	23.0	5.3	102	28
Strontium-87m	2.83 h	12.3	4.6	54	24
Calcium-47	4.53 d	0.55	0.54	2.4	2.9
Scandium-46	83.8 d	8.2	1.8	36	9.4
Scandium-47	3.35 d	0.55	0.29	2.4	1.6
Copper-64	12.8 h	7.5	1.0	33	5.5
Lanthanum-140	40.2 h	0.06	0.02	0.3	0.1
Gallium-72	14.1 h	0.4	—	1.7	—
Chromium-51	27.7 d	—	0.07	—	0.4
Bromine-82	35.4 h	0.1	0.04	0.4	0.2

[a]Total target.

B. Isotopic Power

1. Thulium-170

The objectives of this research are to provide sufficient data on thulium-170 to permit assessment of its potential application as an isotopic power source for short-duration missions.

Completed recently are the experiments to determine rates of weight change at 1900°C of the empty Knudsen cell (large) and of the same cell containing Tm_2O_3. The partial pressures of TmO, Tm, and O and the "apparent" vapor pressure of Tm_2O_3 above the solid Tm_2O_3 at 1900°C listed in Table 3 have been computed from these rate data using proper correction factors. The experiments at this temperature required a considerably longer time than those at 1990°C in attaining the steady-state rates due to some undetermined causes.

The apparent vapor pressure of Tm_2O_3 at 1900°C determined in this way is 1.03×10^{-7} atm which compares with the calculated value of 7.41×10^{-8} atm based on thermodynamic considerations. The orifice of the small Knudsen cell was unplugged by mechanical means, and the cell is now being employed in the vapor pressure experiments with Tm_2O_3 at 1900°C.

Table 3. Rates of Effusion, and Partial and Total Pressures of Various Vapor Species Above Solid Tm_2O_3 in Large Knudsen Cell at 1900°C

Vapor Species	Rate of Effusion[a] ($g/cm^2.min$) x 10^5	Partial Pressure[b] (atm) x 10^7
TmO	3.44	0.45
Tm	2.57	0.35
O	0.52	0.23
Total	6.53	1.03[c]

[a]Corrected for the weight change of the empty Knudsen cell as well as for the thermal expansion of the orifice.
[b]Corrected for the Clausing factor (a transmission probability).
[c]"Apparent" vapor pressure of Tm_2O_3.

C. Rare-Earth Radionuclides

1. Europium-152

Europium-152 has recently gained a unique position of interest with at least ten laboratories throughout the world studying this radionuclide. The europium-152 nuclide is situated at the edge of the transitional region where the spherical structure of the nucleus changes to a deformed shape. Because of its half-life (14 years) it presents itself as one of the more favorable cases for investigation, and consequently there is a rather large amount of data, both experimental and theoretical, concerning the characteristics of this nucleus. These results have been used extensively in testing the validity of the Bohr Mottleson model. One of the pioneer works in the initial understanding of the mixing of the vibrational and rotational modes of motion of the daughter nucleus was that of Riedinger *et al.*[1] at ORNL.

More recently, europium-152 has aroused interest as a low-energy photon Ge(Li) calibration source,[2] as a precision gamma-ray energy source in the range of 45 to 1257 keV,[3] and as a photopeak efficiency calibration source.[4]

The use of europium in the control rod element of the Oak Ridge High Flux Isotope Reactor has focused further attention on not only the (n,γ) products of europium, as well as multiple neutron capture products, but on the decay products and their (n,γ) reaction progeny. Gram quantities

[1]L. L. Riedinger, N. R. Johnson, and J. H. Hamilton, *Phys. Rev.* C2, 2358 (1970).
[2]A. Notea and E. Elias, *Nucl. Instrum. Methods* 86, 269 (1970).
[3]D. E. Raeside, *Nucl. Instrum. Methods* 87, 7 (1970).
[4]R. S. Mowatt, *Can. J. Phys.* 48, 2606 (1970).

of 60-80 at. % gadolinium-152 transmutation product have been successfully isolated from the spent cylindrical europium control plates of HFIR and reirradiated to produce gadolinium-153 of high specific activity. Sources useful for medical applications and varying in size from 20 to 3000 mCi have been prepared.[5]

The purpose of this investigation was to prepare high specific activity 14-year europium-152 suitable for a beta spectrometer source. The production mode of europium-152 and the various (n,γ) reaction products of interest are shown in Fig. 1. The calculated specific activity of europium-152, using isotopically enriched europium-151 (96.67 at. % europium-151 and 3.33 at. % europium-153) and a flux of 2.45×10^{15} n/cm^2.sec, is shown as a function of irradiation time in Fig. 2. In addition, the specific activity of 7.8-year europium-154 generated from the minor amount of europium-153 originally present in the target and by the successive capture of neutrons by the europium-151 target material is plotted on the same graph for convenience. The activity is expressed in millicuries per milligram of europium-151-155, corrected for the change, with time, of the relative amounts of each europium isotope.

A 1.50-mg europium-151 target, as Eu_2O_3, was irradiated with a flux of 2.45×10^{15} n/cm^2.sec for 20 hr in the hydraulic tube facility of HFIR. Radiochemical purification involved precipitation of the rare-earth hydroxide, purification of the rare earths by passage through a Dowex 1 anion exchanger, mutual separation of the rare earths by passage through a Dowex 50W, 20-40 μm cation exchanger at ∿400 psi using α-hydroxyisobutyric acid, and isolation of the europium from the butyrate by passage through a Dowex 50W cation exchanger in the chloride form. Yield data, obtained from an aliquot of the unprocessed solution, are given below:

Nuclide	Half-life	Yield (mCi/mg Eu target) Theoretical	Experimental
Europium-152	14. years	46.6	44.8
Europium-154	7.8 years	2.60	1.23
Gadolinium-153	242. days	5.82	2.56

An estimated 0.329 mCi europium-155 was also produced, but could not be observed.

Cobalt carrier was added to an aliquot and the cobalt precipitated as potassium cobaltinitrite. Cobalt-60 contamination in the original solution was determined to be ≤ 0.05 μCi per mg of europium target material.

Preliminary gamma-ray spectroscopy with a Ge(Li) detector shows no evidence of any activities other than 14-year europium-152 and 7.8-year europium-154.

A 2- by 23-mm europium-152 electron source was prepared by molecular plating from a neutral solution of the europium in isopropyl alcohol.

---

[5]A. F. Rupp, *Radioisotope Program (8000) Progress Report for March 1971*, ORNL-TM-3380, Oak Ridge National Laboratory, p. 3.

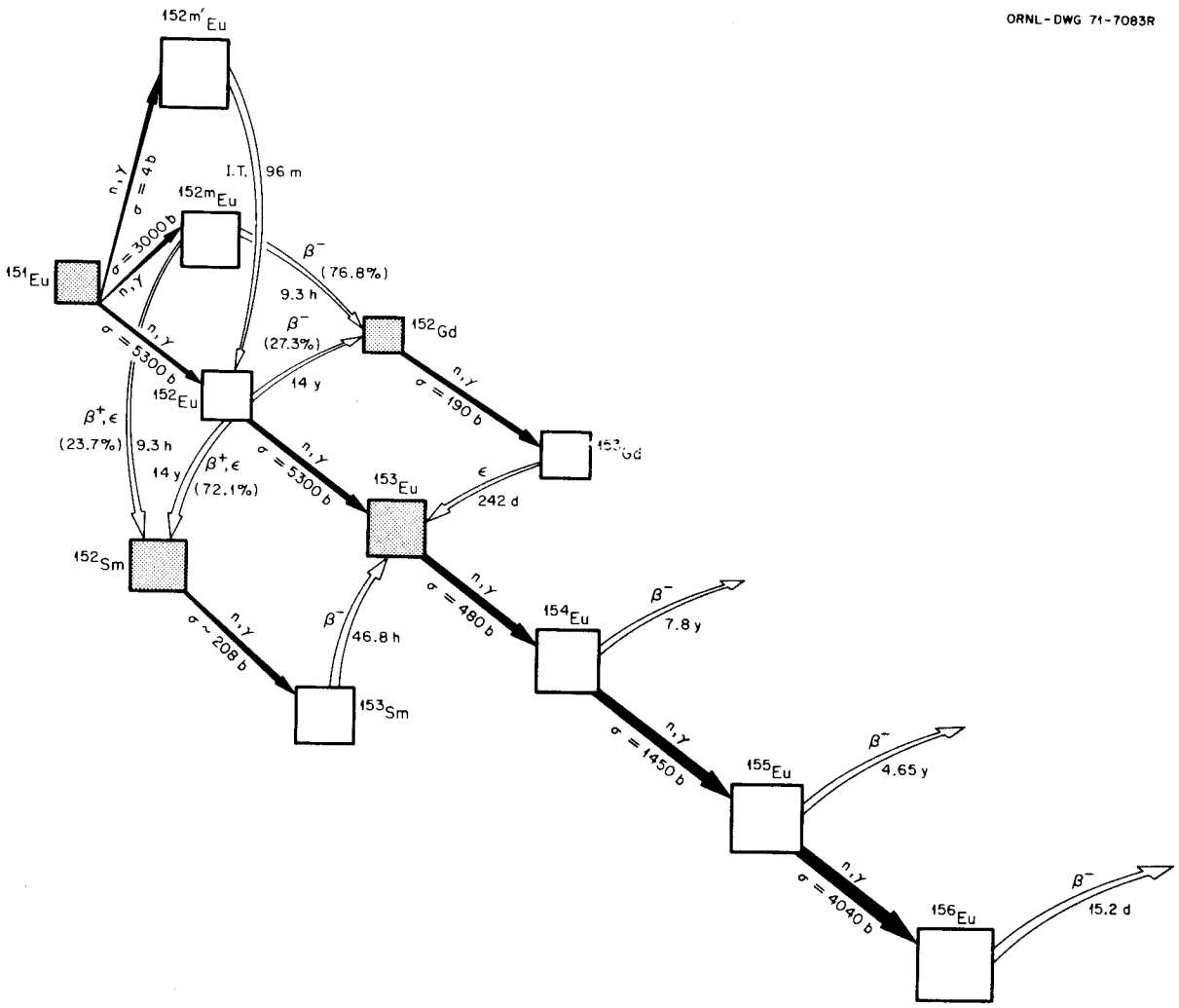

Fig. 1. Production Mode for Europium-152.

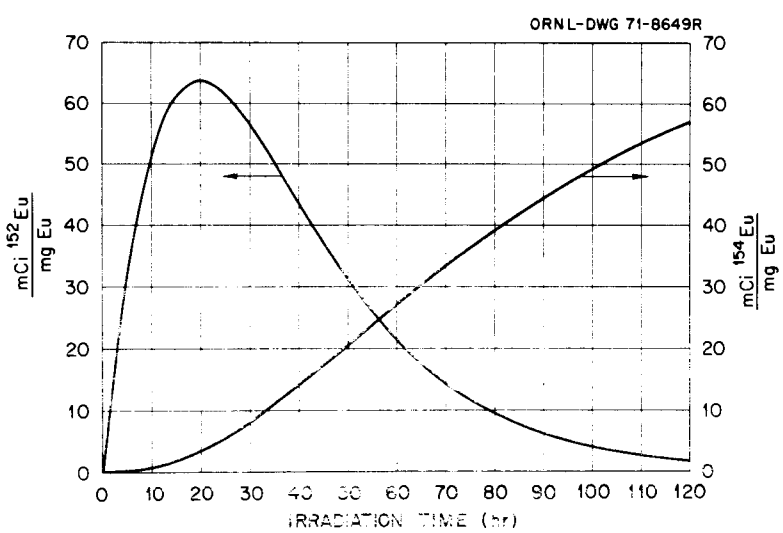

Fig. 2. Specific Activity of ^{152}Eu and ^{154}Eu as a Function of Irradiation Time. The activity is expressed in millicuries per milligram of $^{151-155}Eu$.

2. Terbium-156 (5.4 day)

The production of the Mössbauer isotope 5.4-day terbium-156 has been reported earlier.[6] The decay of terbium-156 to gadolinium-156 was studied by gamma-ray spectroscopy.[7] In addition, the conversion electron spectrum was measured and the K-conversion coefficients of 34 transitions in gadolinium-156 were obtained.[8] In the June Newsletter we called attention to the Japanese conversion electron intensity work[9] and our proposal to combine our data. Many new weak transitions were observed for the first time in both the United States work and the Japanese work, and several of the levels which involve these weak transitions were not assigned spins and/or parities. By combining the conversion electron and gamma-ray intensities by means of measured conversion coefficients[8,9] in this decay, conversion coefficients were deduced for many of these new weak transitions, and from these data multipolarities of the transitions were determined and several spins and parities were determined for the first time. In all, the K-conversion coefficients for 80 transitions in gadolinium-156 from the decay of 5.4-day terbium-156 were obtained. A new level scheme, incorporating seven levels seen in only one or the other of the recent studies, has been submitted for publication.

D. Reactor Products Pilot Production (Production and Inventory Accounts)

Processed Units		Service Irradiations	
Radioisotope	Amount (mCi)	Type	Number
Copper-67	22	Al-Er Foil	1
Calcium-47	8	Osmium-190	1
		Gadolinium-153	1
		Tantalum	1
		$TaAl_2$	1
		Molybdenum	3
Total	30		8

[6]A. F. Rupp, *Radioisotope Program (8000) Progress Report for April 1971*, ORNL-TM-3414, Oak Ridge National Laboratory, p. 9.
[7]D. J. McMillan, J. H. Hamilton, and J. J. Pinajian, *Phys. Rev.* C4, 542-65 (1971).
[8]D. J. McMillan, J. H. Hamilton, M. Mladjenovic, J. C. Manthuruthil, and J. J. Pinajian, *Z. Phys.* 241, 103-16 (1971).
[9]M. Fujioka, *Nucl. Phys.* A153, 337-82 (1970).

ACCELERATOR-PRODUCED ISOTOPES - 08-01-02

A. Biomedical Radioisotopes

1. Gallium-67

The objectives of this program are to determine the optimal target configuration for gallium-67 (78.2 hr) production by the $^{68}Zn(p,2n)^{67}Ga$ reaction in acceptable purity and quantity and to provide gallium-67 for clinical applications research and development. Interest in this isotope has been spurred by evidence, obtained by the Medical Division of Oak Ridge Associated Universities (ORAU), of a high uptake of carrier-free gallium-67 by lymphoid tumors in both animals and humans.

Gallium-67 decays by electron capture with the emission of four main gamma rays of 93, 185, 300, and 394 keV with intensities of 42, 24, 17, and 5%, respectively.

Weekly pilot production of gallium-67 continued; four preparations were shipped to customers. Four weekly shipments of 100-mCi batches of gallium-67 citrate were supplied to ORAU during this period as part of the Cooperative Group to Study Localization of Radiopharmaceuticals (CGSLR) project. All preparations were tested by ORAU and found to be pyrogen-free as required for human use.

An interesting observation was made regarding the high-purity zinc tube extrusion used for target fabrication. A target was fabricated from a segment of tubing that would withstand only 1-2 hr of irradiation shortly after having been extruded, but now (approximately 6-8 months later) withstood greater than 10 hr without failure. This apparent target "aging" will be investigated further to determine whether it is real or whether the target longevity should be attributed to machine operating conditions. Target development of an enriched zinc-68 electrodeposited target will be continued as cyclotron scheduling permits.

2. Indium-111

The objectives of this program have been to define and optimize the pertinent production parameters for the economical production of indium-111 of satisfactory quality for radiopharmaceutical manufacture. The current objectives are to obtain practical operating experience of the procedures developed by pilot production and to provide this radionuclide to interested customers as a special research material – in batch lots – for their evaluation. Indium-111 has been suggested for such studies as spinal-cerebral cisternography, aerosol lung studies, delayed brain scanning, visualization of the lymphatic system, metabolic studies of indium-labeled macroaggregates and colloids, and tumor localization.

> Indium-111 has gamma emissions of 173 keV (89%) and 247 keV (94%) ideally suited for external detection and an optimal half-life (2.83 days) for labeling and distribution studies which must be carried out over 24 hr or longer.

Two batches of indium-111, approximately 270 mCi total at end of 1-day decay allowance, were prepared and portions supplied to interested clinicians as a special research material. Interest in indium-111 has developed to the point that the pilot production schedule will be increased to weekly production starting the first of October. In order to minimize processing costs during weekly production, a larger inventory of ^{111}CdO target material will be maintained, with target recovery being performed monthly. The current target recovery procedure[10] used for larger batches of ^{111}CdO (approximately 2.5 g per recovery) was checked using cadmium-109 tracer and verified to yield greater than 95% recovery under routine operating conditions. The procedure was also shortened by omitting the conversion of bromides to nitrates before precipitation of $Cd(OH)_2$, thereby reducing the time required to less than 1 hr, exclusive of the unattended conversion of the $Cd(OH)_2$ to CdO in a furnace at 450°C for 3 hr.

B. Accelerator Pilot Production (Production and Inventory Accounts)

Table 4 gives the September 1971 accelerator runs for ORNL and non-ORNL programs.

Table 4. Accelerator Irradiations and Runs for September 1971

Product	No. of Runs	Time (hr:min) Beam	Misc.	Total	Total Charges
		ORNL Programs			
Gallium-67	4	19:20	4:45	24:05	$ 2,469
Indium-111	2	5:00	2:10	7:10	744
Cobalt-61	3	7:55	2:55	10:50	1,049
					$ 4,262
		Non-ORNL Programs			
Bismuth-207	1	8:00	1:15	9:15	$ 1,499
Cobalt-57	3	146:25	3:45	150:10	24,847
					$26,346

[10] A. F. Rupp, *Radioisotope Program (8000) Progress Report for December 1969*, ORNL-TM-2828, Oak Ridge National Laboratory, p. 9.

FISSION PRODUCTS - 08-01-03

A. Krypton-85 Enrichment

Units A and B (see Fig. 3) are operating at low pressure due to a shortage of available krypton feed. Unit A appears to be building up slowly, but unit B does not appear to be operating properly. Unit CD, from which the high-level product was removed, is at slightly lower than normal pressure. Plans are to transfer enough of the material from unit B into unit A to bring this system up to normal pressure and to transfer the remainder into unit CD. Unit B can then be checked out to determine the trouble.

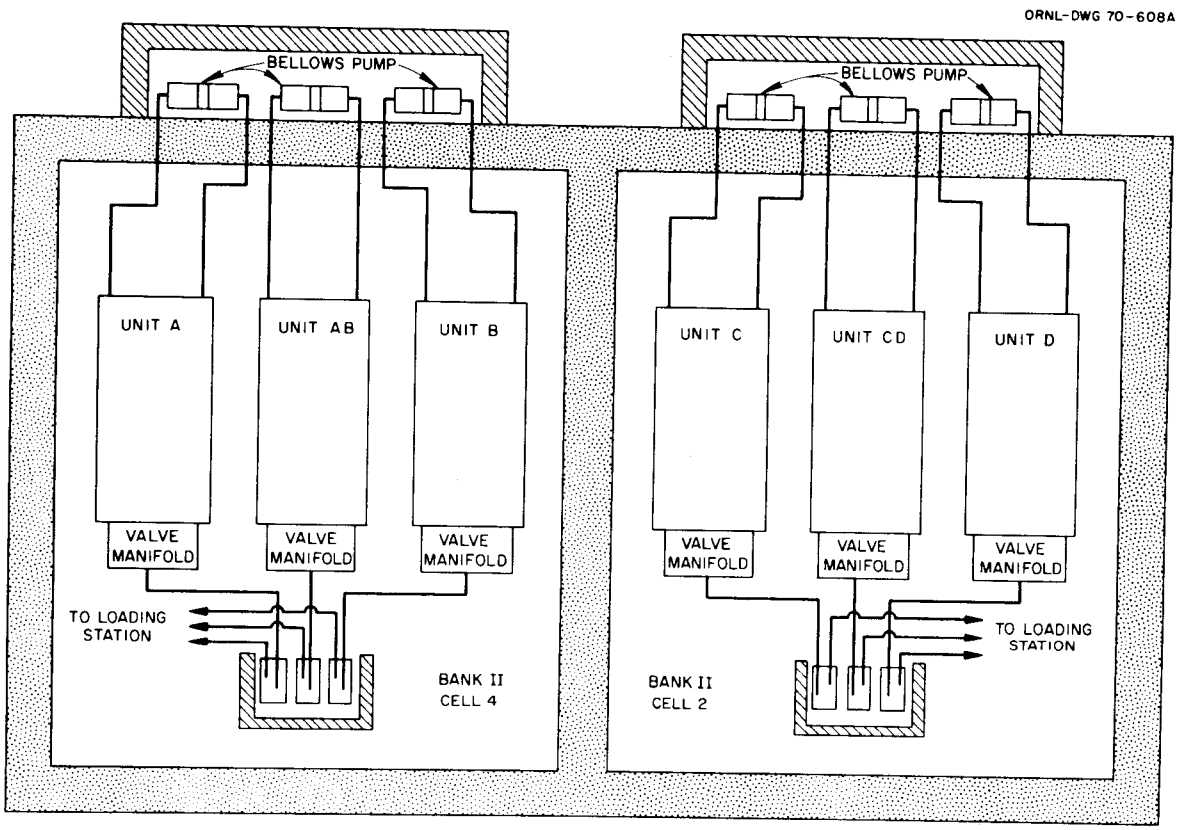

Fig. 3. Schematic Arrangement of Krypton-85 Columns.

Units C and D appear to be at equilibrium, but a shortage of feed krypton prevents replacing the depleted ends. The enriched material in these units will be held either for sales or as feed material for the high-level unit CD.

Unit AB, loaded with fission xenon, was sampled, and after 20 days of operation the krypton-85 content was reduced from 0.4 to 0.002 μCi/ml, a decontamination factor of 200. Product will be withdrawn in small cuts to determine the effective volume of product existing below 0.005-μCi/ml

activity. From these data, the production rate of decontaminated fission xenon by thermal diffusion can be calculated.

Unit	Activity in Unit (Ci)	Time Since Last Product Removal (days)	Count Rate in Product Section (counts/min) Aug. 1971	Sept. 1971
A	120	70	2,250	3,600
AB	Xenon	30	—	—
B	120	70	2,400	1,800
C	1784	260	7,200	6,900
CD	2056	480	11,700	12,850
D	1647	260	7,200	6,900

B. Cesium-137 Gamma Source Development

Cesium-137 chloride has been the compound of choice for radiation sources in applications of moderate temperature conditions. In many respects cesium chloride is the ideal compound; the cesium weight per unit volume is high, the radiation resistance of the CsCl is excellent, the compatibility with stainless steel at ambient temperatures is excellent, and its preparation is straightforward. However, the projected conditions of use of cesium-137 gamma sources are increasingly severe with respect to temperature, and some applications indicate the need for a cesium source material which has low solubility. In view of these projected conditions of use, the testing of $^{137}CsCl$ at elevated temperatures is being done and the development of a low solubility, temperature-resistant source form of cesium is being studied.

1. Alternative Cesium-137 Source Form Development

Additional experiments have been carried out to prepare compounds of the types $Cs_2O \cdot MgO \cdot nSiO_2$ and $Cs_2O \cdot Al_2O_3 \cdot nSiO_2$. The chemical analysis of the products is incomplete because of the difficulties in obtaining reproducible results for the silica content of some samples. A new and fast technique for the silica analysis is being developed and is expected to give an improved reproducibility. In the absence of a complete chemical analysis, certain semiquantitative inferences can still be drawn based on the overall material balance, the solubility data, and the preliminary examination of products by the high-temperature microscope. The discussion on such basis is presented below in regard to the effects of various key parameters on the product characteristics.

a. Composition of Initial Reaction Mixtures

In the preparation of the compounds $Cs_2O \cdot nSiO_2$, the value of n as imposed upon the feed composition exerts a significant influence on the weight

losses of the reaction mixture in the course of reaction. The weight losses were the lowest at $n = 4$, but they doubled at $n = 2$. There was some reduction in the losses when n changed from 2 to 1. However, the value of n had no apparent effect on the calcining conditions required for high conversions.

Only reaction mixtures corresponding to $n = 1$ and 2 in $Cs_2O \cdot MgO \cdot nSiO_2$ and $Cs_2O \cdot Al_2O_3 \cdot nSiO_2$ were employed thus far in the present study. In general, the mixture with $n = 1$ was less stable than that with $n = 2$ during the reaction, resulting in greater weight losses for the former than for the latter. The amount of insolubles in the product calcined at 1100°C did not seem to vary with the composition of the reaction mixture. Such behavior (weight losses and solubility) may be an indication that the same types of compounds are formed regardless of the initial composition. According to the literature, the compound $Cs_2O \cdot Al_2O_3 \cdot 2SiO_2$ is stable at 1100°C, and at temperatures in excess of 1400°C the most stable compound is pollucite $Cs_2O \cdot Al_2O_3 \cdot 4SiO_2$. The types of compound formed in the present study will be determined when results of the chemical and x-ray analyses become available.

b. Methods of Preparation

The major emphasis in the preparation of the compounds of $Cs_2O \cdot MgO \cdot nSiO_2$ and $Cs_2O \cdot Al_2O_3 \cdot nSiO_2$ has been the stagewise reaction by first forming a water-glass-type compound $Cs_2O \cdot nSiO_2$ which is then reacted with MgO and Al_2O_3 [or $Al(OH)_3$], separately, to produce the desired compounds. Since Al_2O_3 produced by the low-temperature calcination of $Al_2O_3 \cdot xH_2O$ is known to form aluminates readily with alkalies, an alternative stagewise reaction was also carried out by initially forming cesium aluminate followed by reaction with SiO_2. Another method in the preparation of the compound $Cs_2O \cdot Al_2O_3 \cdot 2SiO_2$ was a simultaneous reaction involving Cs_2CO_3, SiO_2, and $Al(OH)_3$.

Based on the limited amount of data for $Cs_2O \cdot Al_2O_3 \cdot nSiO_2$, the extent of conversion with the stagewise reaction method appeared to be appreciably greater than the simultaneous reaction method under the same condition. The weight losses during the reaction for the latter method were considerably higher than the former. Likewise, high weight losses were encountered with the alternative stagewise reaction method (starting with preparation of aluminate) as compared with the method via $Cs_2O \cdot nSiO_2$.

The dried product of $Cs_2O \cdot Al_2O_3 \cdot SiO_2$ was also made into a cylindrical pellet at room temperature with a cold press prior to calcination at 1100°C. This was done primarily for the purpose of improving contacts between solid particles to reduce the mass transfer resistance in the calcination step. The solubility and weight loss data for the calcined pellet product did not seem to show any significant advantages over the product resulting from calcination of loose particles. This behavior presumably implies that the chemical reaction is the rate-controlling step at this temperature for the reaction system under consideration. A significant increase in the extent of reaction as inferred from the solubility data was noted when the calcining temperature increased from 1100 to 1400°C.

c. Compound Form and Structure of Reactants

The variation in the reactivity of Al_2O_3 and MgO with the temperature of preparation and their crystal structures is a well established phenomenon. The conditions (temperature, etc.) under which Al_2O_3 and MgO used in the present study were prepared are unknown, and their crystal structures have not been determined. Also based on the thermodynamic data, $Al(OH)_3$ and $Mg(OH)_2$ are more reactive toward alkalies than the equivalent anhydrous compounds. The higher reactivity of $Al(OH)_3$ over Al_2O_3 was demonstrated in the preparation of $Cs_2O \cdot Al_2O_3 \cdot nSiO_2$. The relative increase in the amount of insolubles in the preparation of $Cs_2O \cdot MgO \cdot nSiO_2$ was more than twice that of cesium aluminosilicates under the same condition. This probably indicates a more extensive conversion of the compound containing MgO than that with Al_2O_3. The weight losses appear to be approximately the same for both types of compounds. Magnesium hydroxide will be used in the future experiments to investigate its rate of reaction in the preparation of $Cs_2O \cdot MgO \cdot nSiO_2$.

C. Cesium-137 Pilot Production (Production and Inventory Accounts)

1. Processing and Process Status

The HAPO-IC cask received on August 19 was unloaded without difficulty, cleaned, and shipped back to ARHCO. The recovered cesium-137 was 414,000 Ci versus the 380,000 Ci quoted loading. Unloading was done in two passes of 1200 liters each of 5 *M* NH_4NO_3. A slight modification of the procedure used on the first HAPO-IC shipment was made. Instead of doing all elution at full flow rate (approximately 4 bed volumes per hour), only the first 600 liters of eluant was fed at full flow. Then the second 600 liters of the first pass and all 1200 liters of the second pass were put through in discontinuous fashion, with 100-liter batches being allowed to stand on the bed for 30 min before being drawn off. The discontinuous flow was started after most of the cesium-137 had been eluted (as indicated by the in-line monitor). The longer contact time resulted in better removal of the cesium-137 in the first fraction, as shown below in a comparison of the two HAPO-IC shipments.

Fraction	Cesium-137 Recovered (Ci) Nov. 1970	Aug. 1971
Hydration (water)	1,900	850
First elution (5 *M* NH_4NO_3)	364,700	410,300
Second elution (5 *M* NH_4NO_3)	19,000	3,000
Na^+ conversion (2.7 *M* $NaNO_3$)	2,400	50
Rinse (water)	200	negative
	388,200	414,200

The relatively low cesium-137 in the second elution and very low cesium-137 in the Na^+ conversion step are good evidence of a high removal of cesium-137 from the bed. The hydration water and first elution fractions were stored

in the main cesium-137 feed storage tank; the other solutions were processed through the first accumulation crystallizers. The current cesium-137 process status is as follows:

Item	Cesium-137 (Ci)
In-process material	998,000
$^{137}CsCl$ products	47,500
Sources in fabrication	0
Completed sources awaiting shipment	71,000

2. Operational Summary

	September 1971		FY 1972	
Item	No.	Amount (Ci)	No.	Amount (Ci)
HAPO shipments received	1	414,200	1	414,200
Product batches prepared	0	0	6	70,000
Sources fabricated	17	31,500	32	50,000
Special form containers loaded	0	0	13	600
Sources shipped	11	7,000	15	18,500
Special form containers shipped	0	0	11	500

3. Current Orders

Current orders for cesium-137 as sources or bulk powder are shown below:

Customer	Amount (Ci)	Estimated Shipping Date
Lockheed-Georgia Company	~35,000	a
American Nuclear Corporation	125	a
Brookhaven National Laboratory	203,000	FY 1972
Total	238,125	

[a]Sources are in storage awaiting receipt of customer's container or pickup.

An order is on hand for about 154,300 Ci as bulk powder to be scheduled and shipped as released by the customer.

4. Source Fabrication

The miscellaneous cesium-137 source campaign has been completed and the following orders have been filled.

Customer	Number of Sources	Type	Curies per Source	Total Curies
J. L. Shepherd & Assoc.	11	Miscellaneous	Varied[a]	7,050
American Nuclear Corp.	1	Radiographic[b]	125	125
Lockheed-Georgia Company	16	Tubular	∿1,900	∿30,400

[a]Between 60 and 6,000 Ci/source.
[b]Modified.

J. L. Shepherd & Associates - These sources were reported in August as being completed but being held due to customer's inadequate container. These sources were shipped in September. Four of the sources were shipped in the customer's container and the remaining seven were shipped in an ORNL container.

Lockheed-Georgia Company - Sixteen cesium-137 sources have been completed and are being stored pending arrival of the customer's container.

D. Strontium-90 Pilot Production (Production and Inventory Accounts)

1. Processing and Process Status

Installation of a new induction-heated hot press, which will also serve as a calcining furnace, was accomplished and the press was checked out. Feed preparation for a $^{90}Sr_2TiO_4$ test batch was started. This batch will serve as a test of two planned procedure revisions – rare-earth removal and dry-blending for fuel composition adjustment.

The rare-earth removal step is necessary because of the rather high inert rare-earth content of the most recently received strontium-90 feed. Laboratory tests and small-scale in-plant tests have shown good removal of rare earths by precipitating them as the oxalate from 0.1 *M* acid solution. This will be tested on a full-scale (about 50,000 Ci) batch of strontium-90. For source preparative work the purified strontium-90 will be precipitated as the carbonate (not in the presence of titanium dioxide as is usually done) for use in the dry-blending tests.

The dry-blending procedure is an attempt to formulate fuel compositions more accurately than is possible by the precipitation method. During the most recent strontium-90 pelletization runs, poor densities and other undesirable effects on pellets were seen when pressings were made with materials having compositions intermediate between Sr_2TiO_4 and $SrTiO_3$. Laboratory work verified this effect, indicating that compositions should be held more closely to the nominal for either end of the range. Since solution analysis on large batches of strontium-90 is not precise enough to ensure proper addition of TiO_2 at this stage, a dry-blend approach will be tested. In this method the strontium-90 will be precipitated as the carbonate and allowed to dry. The strontium-90 content of the dry powder can then be determined calorimetrically with good precision, and the

amount of TiO_2 required for any desired fuel composition can be calculated. The appropriate amounts of $^{90}SrCO_3$ and TiO_2 will be mechanically blended and the blended material calcined to product. Operationally, the main drawback to this approach is the addition of an extra powder handling step. The dry-blend procedure has been used before with good results for preparation of specific grades of fuel for compatibility tests and similar experimental use. A similar method was used quite extensively during the period in which strontium-90 fuel pellets were made by the cold press/sinter technique. However, at that time the materials being blended were all in the titanate form but of differing compositions.

Present plans call for one full-scale test batch carried through to pressing a 10-cm-diam, 300-W pellet. One possible trouble spot would be a significant carry-over of oxalate into the carbonate product. This could result in carbon contamination in the final product since complete calcination of strontium oxalate is difficult. Unless plans for a 2200-W unit now being discussed are finalized, strontium-90 processing will be shut down after completion of the test run.

The current strontium-90 process status is as follows:

Item	Strontium-90 (Ci)
In-process material	957,000
Strontium-90 products	439,500
Sources in fabrication	0
Returned SNAP sources	340,900
Completed sources awaiting shipment	64,600

2. Operational Summary

	September 1971		FY 1972	
Item	No.	Amount (Ci)	No.	Amount (Ci)
HAPO shipments received	0	0	0	0
Product batches prepared	0	0	0	0
Sources fabricated	0	0	0	0
Special form containers loaded	0	0	0	0
Sources shipped	0	0	0	0
Special form containers shipped	0	0	0	0
Shipments to customers	0	0	12	45,900

3. Current Orders

Current orders for strontium-90 as sources or bulk powder are as follows:

Customer	Amount (Ci)	Estimated Shipping Date
U. S. Navy	411,380	a
U. S. Navy	208,000	a
Total	619,380	

[a]Further work and subsequent shipment are pending receipt of instructions from customer.

E. Strontium Pellet Hot Press

1. Pellet Pressing

Two pellets were pressed during September using a graphite die body in an induction-heated hot press. One pellet was pressed to examine the feasibility of pressing a pellet with a protective nickel sheath, the other to determine the pressing characteristics of a 4-in.-diam pellet. Both pellets used Sr_2TiO_4 powder that was produced by calcining dry-blended $SrCO_3$ and TiO_2.

Pellet 21 - This pellet was pressed in a graphite die body lined with 40-mil nickel felt (30% density) with end caps from the same material. The punch was designed to compress the nickel liner as well as the Sr_2TiO_4 powder. Under the proper temperature and pressure conditions the end caps fuse with the side wall producing a densified pellet protected from the atmosphere by the nickel sheath.

During the run, the die body (spun graphite) failed, causing the pellet to distort and allowing the nickel to disperse throughout the system. The pellet appeared to be completely sheathed, although the top and bottom coverings were very thin. The pellet had an estimated density of 4.4 g/cm^3.

Pellet 22 - This pellet is the largest one pressed during the current program. The 1.5-in.-high by 4-in.-diam pellet weighed approximately 3 lb and had a density of 4.5 g/cm^3. This pellet would represent about 50,000 Ci of Sr_2TiO_4. The pellet was pressed at a pressure of 2500 psi and a temperature of 400 to 900°C.

2. Dry Mixing of $SrCO_3$ and TiO_2

Several methods of mixing $SrCO_3$ and TiO_2 powders were examined during September. These included using a Waring blender, Vee blender, ball mill, and hand mixing. The blended powders were calcined for about 16 hr at 1300°C and analyzed by x-ray diffraction for conversion to Sr_2TiO_4. Poor conversion rates were found using the hand-mixing and ball-mill techniques so the major effort was slanted toward establishing parameters for the Waring and Vee blenders.

a. Vee Blender

The Vee blender used in this project has a working capacity of about 1300 g of powder. Samples were taken at 1-hr intervals for 14 hr and then at 21 and 42 hr. The samples were calcined at 1300°C for 16 hr and analyzed by x-ray diffraction. It was found that 21 hr of blending was required for greater than 95% conversion to Sr_2TiO_4.

b. Waring Blender

The Waring blender used in this program has a working capacity of about 250 g of powder. The first procedure used was as follows:

1. Add about 250 g of $SrCO_3$-TiO_2 powder and attach lid.

2. Blend for 1-1/2 min, tapping the side lightly every 15 sec.

3. Pour powder into beaker and stir with a spatula.

4. Sample the material and repeat steps 1-3 four times.

As in the case of the Vee blender, the samples were calcined and analyzed. None of the samples had greater then 85% conversion to Sr_2TiO_4. The second procedure used with the Waring blender was as follows:

1. Add about 250 g of $SrCO_3$-TiO_2 powder and attach lid.

2. Blend for 1 min, tapping lightly every 15 sec.

3. Remove can from drive mechanism and bump several times on bottom edge with can at 30-45° angle. Rotate the can 90° and repeat until all four corners have been tapped.

4. Repeat steps 2 and 3 three times.

5. Set can aside for 5 min to allow fines to settle.

6. Remove lid and stir powder being sure to mix thoroughly the powder below the blades.

7. Repeat steps 2-6 three times and sample.

8. Repeat steps 2-7 and sample.

Using this second procedure the samples were calcined at 1300°C for 16 hr and analyzed by x-ray diffraction. The first sample which was taken about 30 min from the start had approximately 95% conversion to Sr_2TiO_4. The second sample which was taken about an hour from the start had approximately 97% conversion to Sr_2TiO_4.

We consider it feasible to dry-mix $SrCO_3$ and TiO_2 by means of either a Waring blender or Vee blender in a hot cell. The Waring blender has the

advantage of 1) small size (can be bagged in and doesn't take up very much cell space) and 2) faster mixing times. The disadvantages of the Waring blender are 1) the low capacity requires more runs per pellet, 2) the blender creates fines which have to be handled carefully, and 3) the procedure requires operating personnel to be present throughout the run.

The Vee blender has the advantages of 1) unattended operation, 2) less handling per pellet, and 3) no fines are created. The disadvantages are 1) longer mixing times required and 2) takes up more room in cell (can't be easily bagged in).

Since floor space is of prime importance, the initial dry-mixing runs using radioactive material will use the Waring blender procedure.

F. Short-Lived Fission Products Pilot Production (Production and Inventory Accounts)

Isotope	Number of Batches	Amount (Ci)
Xenon-133	2	~700
Barium-140	1	No analysis available
Strontium-89	1	No analysis available

SOURCE DEVELOPMENT - 08-01-04

A. Radiation Processing (Not Supported by 08 Program; WFO Account)

Pollution of our rivers by dye waste effluent from textile mills and chemical manufacturers is a serious problem. Past experimental work has shown that radiolytic oxidation of the waste solutions may be a practical method of destroying certain dyes and chemicals. The purpose of this investigation is to study and develop an economically feasible method to do so. A cobalt-60 gamma radiation source is being used to irradiate dye waste solution samples under a high pressure oxygen atmosphere. This work is being supported by the American Association of Textile Chemists and Colorists.

1. Radiolytic Oxidation of Dye Waste Solution

In the previous work at this Laboratory on the radiolytic oxidation of the dye in the waste effluent, emphasis was placed on the conditions needed to eliminate color. The chemical effects that occur during radiation are being studied to determine by-products of the radiolytic oxidation of dye. Intracolor Intrazone Black 2BN was oxidized and the product recovered for infrared spectral analysis.

About 150 ml of solution was radiolytically oxidized under 1500 psi oxygen in the cobalt-60 gamma irradiator for a total dose of 3×10^7 R. Carbon dioxide gas was identified in the waste gas. The solution was evaporated slowly to dryness to recover the solids for the analysis.

Preliminary infrared spectra of the decolorized dye solid as a mull (dispersion) in mineral oil were obtained. A strong band was found at 1130 cm^{-1} wave numbers indicating the SO_3^{2-} of the dye molecule had been oxidized to $S_2O_8^{2-}$. Further infrared spectra are needed on the dye solid in KBr wafers to further identify the products of the process.

The infrared spectra of the four standard dyes which have been studied will be taken and their products evaluated next month. The spectra will be determined in a solid sample in KBr. A new 50-gal/day irradiator is being fabricated and will be installed in the cobalt-60 gamma irradiator to study the irradiation of the dye effluent under higher flow rates.

2. Treatment of Bleach Plant Effluent in Dynamic System

NOTE, erratum: In the August report[11] a statement was made that "after 26 liters of effluent had been put through, it became evident that charcoal was not effective in adsorbing the waste effluent impurities until they were destroyed by gamma irradiation." This statement should have been expressed as follows: "The adsorption of organic fractions from bleach plant effluent onto activated charcoal requires adequate contact time between the effluent and the charcoal. To obtain adsorption the flow rate had to be reduced to a point where the radiation dose delivered to the solution was sufficient to destroy color, thus reducing the effect of the charcoal adsorption part of this particular experiment."

B. Radioisotope Characterization, Quality Control, and Standards

1. Radioisotope Characterization

Interest has developed locally and in ASTM Committee E-10 in the use of silver as a neutron flux monitor. Samples of silver were irradiated in the ORR with and without cadmium shielding, and measurements of silver-110m and cobalt-60 monitor activities were made in three laboratories. F. Kam, who is developing a standard method for E-10, calculated that the thermal cross section of silver-109 for production of silver-110m is 4.0 barns and the resonance integral is 64, in agreement with our earlier determination of 4.1 barns and estimate of 70, respectively.

Information on decay schemes and other data are being updated for a revision of the *Isotope User's Guide*.

---

[11] A. F. Rupp, *Radioisotope Program (8000) Progress Report for August 1971*, ORNL-TM-3558, Oak Ridge National Laboratory, p. 16.

2. Radioisotope Special Analysis and Quality Control

During the past year, fourteen standard preparations of eight radionuclides were obtained from NBS, the British RCC, the French CEA, and three commercial suppliers. Good agreement was achieved with the measurements by the standardizing laboratories, but none of the commercial preparations were satisfactory. Sulfur-35 and silver-110m standards were obtained from several suppliers as a result of suggestions from the NRC standards panel members, and, in addition, ASTM Committee E-10 was interested in the silver-110m standards. In recent months, attention has been concentrated on NBS traceability for local calibrations, in accord with final recommendations of the panel. Standards for seven of the eight nuclides were obtained from NBS, and the eighth, silver-110m, is expected to be available soon. One was a point source of cadmium-109, useful for calibration of dose-rate instruments for low-energy gammas, x rays, and bremsstrahlung. The source, which contained about 13 μCi, was calculated to give a dose rate of 0.80 mR/hr at 5 cm, almost entirely K x rays of average energy ∿22 keV.

C. Radioisotope Safety

1. Luminous Light Sources

In evaluating the usefulness of various common radiation survey meters for accurately measuring dose rates of commercial light sources, it was found useful to first obtain the response of these instruments to sources of known activity in order to illustrate the problems involved. The measurements, made at various source-to-detector window separation distances from an ORNL standard source containing approximately 10.1 mCi of promethium-147, are shown in Fig. 4. The promethium-147 source was essentially a beta source, the photon contribution being small and largely limited to the lower energies (about 10-30 keV). Data are given for an ORNL cutie pie, a Civil Defense survey meter, a Victoreen 440 (air ionization chamber) and lithium fluoride thermoluminescent dosimeters. The calculated photon dose rate is also given.

Since the TLD measurements were sensitive to the total beta and gamma radiation from the source, the difference between the TLD measurement and the calculated photon dose represents a reasonable estimate of the beta dose rate. Using this as a guide, the data in Fig. 4 show that nearly all of the dose rate was due to beta radiation.

The response of the Civil Defense meter was nearly equal to the calculated photon dose rate, indicating that the relatively thick walls (30-40 mg/cm^2) absorbed most of the beta and the detector responded only to the photons. The thinner walled (1-2 mg/cm^2) cutie pie and Victoreen 440 instruments were sensitive to both the beta and photon radiation. The effect of relative geometry of the source and the detector is apparent in these measurements. The cutie pie and the Victoreen 440 were calibrated for area survey use by placing the entire volume of the relatively large detector chamber in a uniform gamma radiation field. When these detectors were placed too near the small standard source the response was much lower than the actual dose rate because the entire area of the chamber was not in a uniform

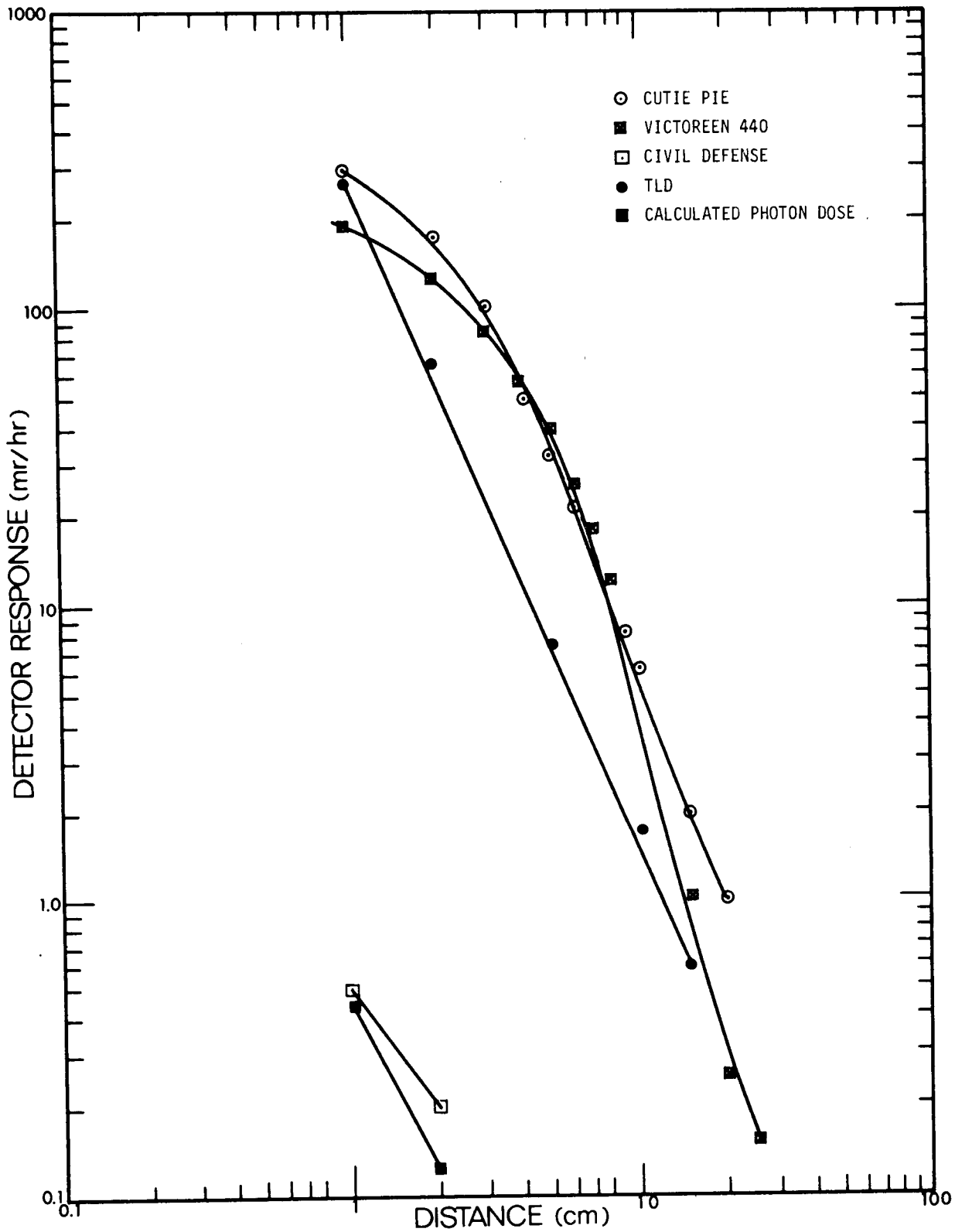

Fig. 4. Detector Response to 10.1-μCi ORNL Standard Promethium-147 Source.

radiation field such as was used to calibrate it. The effects with the small 1/8 x 1/8 x 0.035 in. TLD's were not noticeable. Additional data obtained with krypton-85 and cobalt-60 standards show the same type of effects of geometry and inherent properties of the detectors which introduce uncertainties in the dose rate measurements. The data obtained from the standard sources and from commercial sources will be used in developing a procedure for obtaining accurate dose rate measurements of these sources using common survey instruments.

2. Tritium Foil Study

A series of tests is in progress to determine the effect of the cleaning procedure on tritium losses from titantium tritide containing foils used in certain types of gas chromatograph detectors. Foils of each activity (250, 500, and 1000 mCi/in.^{2}) are being tested by ultrasonically cleaning them for 1 hr. The cleaning solvents are 5% alcoholic KOH, heptane, hexane, and toluene. In these tests a new foil is placed in a vial containing 10 ml of solvent. The vial is sealed during cleaning. The active surface of the foil is facing up to prevent abrasion of the titanium tritide surface. After the foil is cleaned, the solvent is filtered to remove any titanium tritide which may have been removed from the foil. The foil and filter are then rinsed with clean solvent to remove tritium held by the liquid. The rinse solvent is then combined with the filtrate. The combined rinse and filtrate is analyzed by liquid scintillation counting. The amount of activity in the filter is found by heating the filter to 600°C for 2.5 hr and trapping the tritium in a recovery train. The dry foil and the dry filter are viewed under a microscope to observe the amount and size of the particulates on the filter and to determine whether particles have been lost from the surface of the filter. Each of the foils is then tested for losses at 150°C in an argon flow for a 1-hr period. The entire procedure is repeated three times to ascertain the effect of repeated cleaning cycles on the same foil. The preliminary results for tests in alcoholic KOH and hexane are given in Table 5. The losses from the foils which were cleaned in alcoholic KOH are considerably greater than those that were cleaned in hexane, possibly due to chemical reaction between the KOH and the titanium tritide.

Table 5. Tritium Losses Due to Foil Cleaning Procedures

Cleaning Number	Losses During Cleaning in 5% Alcoholic KOH (μCi)				Losses During Cleaning in Hexane (μCi)			
	Filtrate	Filter	Total	Std. Test	Filtrate	Filter	Total	Std. Test
				250-mCi/in.^{2} Foils				
1	27.8	48.4	76.6	4.0	0.18	80.7	80.9	4.1
2	8.9	21.8	30.7	2.3	0.05	77.3	77.4	1.8
3	4.6	15.3	19.9	2.1	0.03	8.7	8.7	1.7
				500-mCi/in.^{2} Foils				
1	75.2	74.6	149.8	50.7	0.16	87.2	87.4	22.3
2	19.6	13.5	33.1	25.2	0.05	19.9	20.0	7.2
3	6.9	15.2	22.1	18.5	0.11	23.9	24.0	0.4
				1000-mCi/in.^{2} Foils				
1	65.3	120.3	185.6	8.3	0.34	21.7	22.0	10.8
2	1.5	46.4	47.9	3.3	2.44	199.3	201.7	3.9
3	0.8	12.3	13.1	3.6	0.13	32.9	33.0	5.6

TECHNOLOGY UTILIZATION - 08-01-05

A. Information Center

In September, 133 requests for information were filled with dispatch of 182 items. Eight letters were translated for the Sales Department. A list of reviews in progress is shown below:

Title	Author(s)	Status (% Complete)
	Radioisotope Briefings for Industry	
Minerals	R. H. Lafferty	80
Paint	R. H. Lafferty	Not begun - awaiting DID approval of format
Paper	R. H. Lafferty	
	State-of-the-Art Reviews	
Iodine-125	Martha Gerrard and P. S. Baker	85
Technetium-99m: Preparation and Uses	Martha Gerrard and P. S. Baker	65
Radioisotopes in the Textile Industry	F. J. Miller and P. S. Baker	98
Self-Diffusion in Liquids	F. J. Miller	75
Grain Disinfestation	F. E. McKinney	20
Snow Gaging and Water Management	U. S. Department of Agriculture	Not received
Radioelectrochemistry	Helen P. Raaen	90
The Environment and Isotopes	Helen P. Raaen	98
Semiconductors	Helen P. Raaen	In progress
Patent Literature on Process Radiation and Irradiator Design, Part 2. British and Canadian Patents, 1950 through 1970	R. E. Greene, Helen S. Warren and P. S. Baker	40
	State-of-the-Art Reviews for *Isotopes and Radiation Technology*	
Radioisotopes in the Steel Industry, Part 3	Republic Steel	Not received
Potato Sprout Inhibition by Radiation, Part 2	F. E. McKinney	50
	Other Reports	
Selected Abstracts of World Literature on Production and Industrial Uses of Radioisotopes, Part 3 of 1971	Martha Gerrard and P. S. Baker	20
Use of Isotopes in Monitoring and Control of Environmental Pollution	W. E. Mott and Martha Gerrard	85
Fruit and Vegetable Bibliography (revision)	F. E. McKinney	95
Iodine-131 Production Methods	French report being translated by Martha Gerrard	Reference checking almost complete
Presowing Irradiation of Seed	Russian book being translated and edited by Martha Gerrard	Proofing of final copy almost complete
Special Sources (supplement)	F. E. McKinney	80
Bibliography of DID Contractor Publications	P. S. Baker	60
Effect of Gamma Radiation on Nonalcoholic Drinks and Wine - Brandy Products	Russian book being translated by Martha Gerrard and P. S. Baker	Final typing being proofed
Isotope Education Experiments	Roberta Shor	60
List of AEC Radioisotope Customers, FY 1971	Ruth Curl (compiler)	65

B. Isotopes and Radiation Technology

Writing and editing for *Isotopes and Radiation Technology* 9(3) were completed and the manuscript was sent to DTIE.

C. Publication

Martha Gerrard and P. S. Baker, *Selected Abstracts of World Literature on Production and Industrial Uses of Radioisotopes*, ORNL-IIC-37, Part 2 (September 1971).

RADIOISOTOPE SYSTEMS DEVELOPMENT

OCEANOGRAPHIC AND NATURAL RESOURCES DEVELOPMENT - 08-03-02

A. Sand Transport Study

Radionuclides appear to be useful tools to study sand transport phenomena and, although many experiments have been conducted to demonstrate their effectiveness as tracers, little is known concerning whether or not the dynamic systems in which they are used can be tagged well enough to achieve quantitative data leading to an understanding of basic mechanisms. The Radioisotope Sand Tracing (RIST) study has progressed through equipment development to the point where important system tagging parameters can be studied.

1. Point Mugu Experiment

Preparations for an experiment at Point Mugu, California, are complete and operations started September 25, 1971, and will end October 8, 1971.

The PDP-8 data handling system on board the tow vessel will automatically transfer radiation data to magnetic tape which is compatible with large computer data input systems. The PDP-8 will also plot radiation data and the position as the data are being collected.

The experiment consists of three phases. Two of the phases are directed toward quantitative sand transport values and the third phase is directed toward performing a survey of the area around the experimental groin. A new injection technique which is based on the theory of a constant feed of radiotracer with continuous monitoring to observe equilibrium will be attempted at the beginning of the experiment. Several plug injections will be made to gather more data on this technique. Emphasis will be placed on obtaining good samples at frequent intervals during the first 24 hr after injection. A radioisotope device to continuously measure the bottom elevation will be used during the period when the plug injections are being sampled. This device uses a 100-mCi cesium-137 source and measures the difference in gamma absorption as sand is removed or added to the space between the detector and the source. Information is transmitted to the

shore with an electromechanical cable. Data are displayed on a strip chart recorder. This information is needed so that bottom changes can be factored into the plug injection data.

2. Technical Service Unit Status

Conception of this unit was a direct result of the present research unit which was assembled from laboratory-type electronic instruments. The laboratory instruments were for general use and had many options for various functions which confused the operators who were not thoroughly familiar with nuclear measurements. Also, the present system requires a generous amount of space, is susceptible to damage by the ocean environment, and requires a supply of well regulated 115-V AC power. The design criteria call for the technical service unit to include all the required functions of the present system and exclude as many of the above mentioned undesirable features as possible.

Within this framework, it was decided that the new unit should be battery operated with data storage on a cassette-type magnetic tape recorder. Several problems were encountered as a result of these decisions. One of the most difficult problems was the choice of a tape recorder. All of the commercially available recorders which had an interface for data retrieval were AC operated and could not be readily adapted to reliable DC operation. Coupled with the power problem was the problem of a recording scheme (formating the standard data with appropriate indexes and timing information) that would allow the greatest utility of information retrieval. At this time there is no industry standard on recording, which means there must be a specific unit built to retrieve the standard data. Commercial suppliers of tape units and interface manufacturers were contacted in an effort to find the most reliable type of unit and the type which might become an industry standard if such a standard should be set in the future. No general solution was forthcoming and a decision was made to interface the cassette unit to a Digital Equipment Corporation PDP-8 series minicomputer, since this type of minicomputer is the most prevalent. Data Company of Fort Walton Beach, Florida, agreed to build an interface between the Ampex TMC tape unit and the PDP-8 series minicomputer. The Ampex TMC unit is the most rugged of all the tape units; its simplicity of operation implies reliable operation and it meets the requirement of DC operation. Design of the technical services unit was then committed to this tape recorder.

The Coastal Engineering Research Center (CERC) is the projected user of the new TSU, and they had initiated purchase of a PDP-8/E minicomputer independent of the decision to use the Ampex TMC unit. Their decision to purchase the minicomputer was predicated in part on the use of the minicomputer as an on-line real-time data processer and data display unit. That decision necessitated the inclusion of a motor generator set on board to supply AC power to the minicomputer. The design of the TSU was then modified to operate on either AC or DC, and a further modification was made to allow direct interfacing between the TSU and the minicomputer.

Another severe problem was encountered when CERC announced their decision to purchase one of three types of automatic range finders which would have

to be interfaced with the TSU. The original concept was to use the cubic autotape range finder which has a simple interface. The other two range finders, which are much less expensive than the cubic model, each have different interfaces and the design of the TSU had to be modified to accept all three types of range finders.

Construction of the TSU is now two-thirds completed, with most of the circuit boards fabricated and a cabinet purchased. A separate box will be included as the main power supply to allow selection of either AC or DC power with regulated power going to the TSU. This was done to minimize the power dissipation (heat build up) in the TSU proper. Construction completion date is the latter part of October with the laboratory checkout at a later date when the interface between the Ampex TMC recorder and ORNL's PDP-8/I is available.

3. RIST Plug Model for Volume Rate of Sand Transport

Measurement of the volume rate of sand transport along a seacoast has eluded all experimenters to date. In the RIST program it is believed the reason for this is at least twofold. One, under techniques of normal injection of radioisotopically tagged sand in the natural sand system, this natural sand system is not properly tagged; that is, the tagged sand movement is not representative of the natural sand movement at the time and for a certain time after injection of the tagged sand. If one waits until there is an equilibration between the two types of sand (natural and tagged) such that the tagged sand movement is truly representative of the natural sand system, it would be physically impossible to determine a starting point for the measurement; and, two, the true depth of the moving layer of sand cannot be accurately measured.

To overcome these problems, a "plug injection" model was constructed in an attempt to actually measure the volume rate of sand movement and help to define the mechanisms of sand transport. A known volume of natural sand (12 in. diam by 10 in. deep) in the ocean is mixed with a known amount of tagged sand. The mixing is done in situ and at the present time all plug injections are done seaward of the breaker zone ($\sim$15 ft of water). The volume is monitored at regular intervals by extracting a small core sample and analyzing the core sample.

Data from preliminary tests of the physical model are being used to develop a mathematical model. The first attempt at the mathematical model was to describe the tagged sand outflow from the plug, using classical heat-flow equations, assuming all the outflow was from the surface of the plug and the rest of the plug was in a perfect insulator. That is, there was no leakage of tagged sand out through the sides or bottom of the volume. After a few runs on the digital computer, it became apparent that this type of equation would not explain the type of movement of tagged sand within the plug. This was partially due to treating the movement in the plug volume as a continuous medium movement. This is not the physical case, as one observes, a passing wave will set up a motion in the sand and the motion depends upon the depth of water (tide changes) and the height and shape of the wave. Since each wave is different, the sand motion will be

different particularly with respect to depth. This leads to treating the plug as though it were constructed of layers. This is a difficult problem on a pure digital computer, and a decision was made to change to a hybrid computer.

The spatial region of interest will be divided into surface nodes (i.e., spatial volumes whose top surface is the ocean floor) and subsurface nodes (spatial volumes below surface nodes). The time-dependent specific concentration (grams of sand divided by nodal volume and sand density) of radioactive and natural sand will be simulated for each node. In the balance equations for each node, which will be solved on the analog computer, the equation coefficients represent sand transfer between nodes by turbulent diffusion and sand transfer between the nodes and water. These coefficients will be updated periodically by the digital computer. Constraints will be imposed on the analog solution so that specific concentrations can never be negative and the amount of sand in any node will not exceed the node volume times sand density. If these constraints are violated during the analog solution, the analog computer will be put in the hold mode (time will be suspended), and new transfer coefficients will be generated by the digital computer. If the hold mode was initiated because a surface node filled with sand, then this node will be redefined as a subsurface node, and a surface node will be placed above it. If a surface node is emptied of sand, it will be removed and the node directly below it will be defined as the new surface node. The depth of each node will be calculated from the mass of sand above the node.

RADIOISOTOPE SALES

A request for quotation was received from J. L. Shepherd and Associates for ten cesium-137 sources, each containing 8,000 Ci. A request for quotation was received from Atomic Energy of Canada for eight cesium-137 sources, each containing 1,800 Ci. An order was received from Minnesota Mining and Manufacturing Company for 5,001 Ci of promethium-147.

Shipments made during the month that may be of interest include 4,000 Ci of tritium to New England Nuclear Corporation, 2,000 Ci of tritium to Canrad Precision Industries, 7,050 Ci of cesium-137 to J. L. Shepherd and Associates, 200 Ci of krypton-85 to General Motors Corporation, 100 Ci of krypton-85 to Pacific Northwest Laboratory, 100 Ci of krypton-85 to General Electric Company, 100 Ci of krypton-85 to Western Electric Company in North Andover, Massachusetts, 100 Ci of krypton-85 to Western Electric Company in Reading, Pennsylvania, 2,500 Ci of promethium-147 to Minnesota Mining and Manufacturing Company, 400 Ci of cobalt-60 to University of California, Livermore, and 200 Ci of cobalt-60 to University of California, Los Alamos.

The radioisotope sales proceeds and shipments for the first two months of FY 1971 and 1972 are given in Table 6.

Table 6. Radioisotope Sales and Shipments

Item	July thru August 1970	July thru August 1971
Inventory items	$ 49,799	$ 72,839
Major products	19,895	8,665
Radioisotope services	34,010	40,102
Cyclotron irradiations	22,761	18,742
Miscellaneous processed material	6,432	15,804
Packing and shipping	13,405	12,847
Total	$146,302	$168,999
Number of shipments	512	464

ADMINISTRATIVE

Visitors to the IDC and travel by IDC personnel are given in Tables 7 and 8.

Table 7. IDC Visitors

Visitor (affiliation)	Subject Discussed
Institute of Atomic Physics Bucharest, Romania	Neutron-deficient radioisotopes and production cyclotrons
Physics Department Vanderbilt University	UNISOR Program, papers on terbium-156 and iodine-132, report on gamma-gamma angular correlation graphs, and experiments on holmium-166m and europium-150
ARHCO	Source fabrication
Amtek Corporation	Radiation processing of sewage
FDA, Washington, D. C.	Tour IIC

Table 8. Travel of IDC Personnel

Site Visited	Purpose of Visit
Vanderbilt University	Discuss holmium-166m experiment
Point Mugu, California	Conduct RIST experiment

PUBLICATIONS

JOURNALS

D. J. McMillan, J. H. Hamilton, and J. J. Pinajian, Energy Levels in ^{156}Gd Populated by 5.4-Day ^{156}Tb, *Phys. Rev.* C4, 542-65 (1971).

L. C. Brown, Determination of Phosphorus-32 and -33 in Aqueous Solution, *Anal. Chem.* 43, 1326 (1971).

REPORTS

E. Lamb, *Isotopic Power Fuels Monthly Status Report for August 1971*, ORNL-CF-71-9-29, Oak Ridge National Laboratory.

A. F. Rupp, *Radioisotope Program (8000) Progress Report for August 1971*, ORNL-TM-3558, Oak Ridge National Laboratory.

Susan K. Whatley, *Stable Isotope Customer List and Summary of Shipments, FY 1971*, ORNL-TM-3543, Oak Ridge National Laboratory (September 1971).

INTERNAL DISTRIBUTION

1. A. L. Allen
2. M. A. Baker
3. P. S. Baker
4. E. E. Beauchamp
5. G. E. Boyd
6-8. T. A. Butler
9. F. N. Case
10. W. R. Casto
11. J. A. Cox
12. F. L. Culler
13. W. C. Davis
14. J. S. Drury
15. J. H. Gillette
16. H. R. Gwinn
17. R. F. Hibbs
18. K. E. Jamison
19. Lynda Kern
20. E. H. Kobisk
21. E. Lamb
22. R. E. Leuze
23. J. L. Liverman
24. L. O. Love
25. W. S. Lyon
26. R. E. McHenry
27. W. W. Parkinson
28. J. J. Pinajian
29. M. E. Ramsey
30. S. A. Reynolds
31-32. R. A. Robinson
33. D. A. Ross
34. A. F. Rupp
35. R. W. Schaich
36. A. H. Snell
37. K. A. Spainhour
38. M. R. Skidmore
39-40. H. F. Stringfield
41. D. B. Trauger
42. A. M. Weinberg
43. J. C. White
44-45. Central Research Library
46. Document Reference Section
47-51. Laboratory Records Department
52. Laboratory Records - RC

EXTERNAL DISTRIBUTION

53. G. A. Andrews, ORAU, Medical Division, Oak Ridge, Tennessee
54. Hal Atkins, Brookhaven National Laboratory, Upton, New York
55. D. S. Ballantine, AEC, Washington, D. C.
56-59. R. F. Barker, AEC, Washington, D. C.
60. N. F. Barr, AEC, Washington, D. C.
61. O. M. Bizzell, AEC, Washington, D. C.
62. C. R. Buchanan, AEC, Washington, D. C.
63. R. L. Butenhoff, AEC, Washington, D. C.
64. T. D. Chikalla, PNL, Richland, Washington
65. D. F. Cope, AEC Site Representative, ORNL
66. J. C. Dempsey, AEC, Washington, D. C.
67. W. K. Eister, AEC, Washington, D. C.
68. E. E. Fowler, AEC, Washington, D. C.
69. J. D. Goldstein, AEC, Washington, D. C.
70. A. Gottschalk, Argonne Cancer Research Hospital, Chicago, Illinois
71. F. D. Haines, AEC, Washington, D. C.
72-74. J. E. Hansen, PNL, Richland, Washington
75. J. W. Irvine, MIT (Consultant)
76. J. Lawrence, Lawrence Radiation Laboratory, Berkeley, California
77. J. E. Machurek, AEC, Washington, D. C.
78. J. N. Maddox, AEC, Washington, D. C.
79. J. C. Malaro, AEC, Washington, D. C.
80. W. E. Mott, AEC, Washington, D. C.
81. J. A. Powers, AEC, Washington, D. C.

82. G. J. Rotariu, AEC, Washington, D. C.
83. B. A. Ryan, AEC, Richland, Washington
84. W. D. Sandberg, AEC, Aiken, South Carolina
85. S. J. Seiken, AEC, Washington, D. C.
86. R. W. Shivers, AEC, Washington, D. C.
87. F. J. Skozen (Krizek), Argonne Cancer Research Hospital, Chicago
88. P. E. Smith, ARHCO, Richland, Washington
89. L. G. Stang, Jr., BNL, New York
90-95. D. H. Turno, SRL, Aiken, South Carolina
96. A. R. Van Dyken, AEC, Washington, D. C.
97. Laboratory and University Division
98-99. Divison of Technical Information Extension