LOCKHEED MARTIN ENERGY RESEARCH LIBRARIES
3 4456 0515076 0

CENTRAL RESEARCH LIBRARY
DOCUMENT COLLECTION

cy. 2

ORNL-4735
UC-41 – Health and Safety

OAK RIDGE NATIONAL LABORATORY
CENTRAL RESEARCH LIBRARY
DOCUMENT COLLECTION
LIBRARY LOAN COPY
DO NOT TRANSFER TO ANOTHER PERSON
If you wish someone else to see this document, send in name with document and the library will arrange a loan.
UCN-7969
13 3-67

TOBACCO SMOKE ANALYSIS PROGRAM PROGRESS REPORT FOR THE PERIOD SEPTEMBER 1, 1970, TO JULY 1, 1971

Prepared by
M. R. Guerin

OAK RIDGE NATIONAL LABORATORY
operated by
UNION CARBIDE CORPORATION
for the
U.S. ATOMIC ENERGY COMMISSION

Printed in the United States of America. Available from
National Technical Information Service
U.S. Department of Commerce
5285 Port Royal Road, Springfield, Virginia 22151
Price: Printed Copy $3.00; Microfiche $0.95

This report was prepared as an account of work sponsored by the United States Government. Neither the United States nor the United States Atomic Energy Commission, nor any of their employees, nor any of their contractors, subcontractors, or their employees, makes any warranty, express or implied, or assumes any legal liability or responsibility for the accuracy, completeness or usefulness of any information, apparatus, product or process disclosed, or represents that its use would not infringe privately owned rights.

ORNL-4735

Contract No. W-7405-eng-26

ANALYTICAL CHEMISTRY DIVISION

TOBACCO SMOKE ANALYSIS PROGRAM
PROGRESS REPORT FOR THE PERIOD
September 1, 1970, to July 1, 1971

Prepared by

M. R. Guerin

Contributors

M. R. Guerin, W. D. Shults, R. B. Quincy, C. A. Pritchard
W. L. Maddox, A. D. Horton, H. Kubota, G. Olerich
J. Stokely, J. B. Ohlrogge*

*Undergraduate research participant from Department of Chemistry, Earlham College, Richmond, Indiana.

OCTOBER 1971

OAK RIDGE NATIONAL LABORATORY
Oak Ridge, Tennessee 37830
operated by
UNION CARBIDE CORPORATION
for the
U.S. ATOMIC ENERGY COMMISSION

CONTENTS

Page

SUMMARY

1.00 Introduction 1

2.00 Particulate Matter Composition 2

3.00 Gas Phase Composition 4

3.01 Acetaldehyde and Acrolein 4

3.02 Carbon Monoxide and Carbon Dioxide 5

3.03 Formaldehyde. 8

3.04 Oxides of Nitrogen 9

3.05 Hydrogen Cyanide. 10

3.06 Gas Phase pH 11

3.07 Sulfur-containing Compounds 11

3.08 Oxidation-Reduction Potential 11

4.00 Smoke Condensate Composition 13

4.01 Water and Acetone 14

4.02 Nicotine and Nicotine Alkaloids 14

4.03 Nornicotine 16

4.04 Phenol and the Cresols 17

4.05 Phenanthrene, Benz(a)anthracene, and Benzo(a)pyrene . . . 19

4.06 Titrimetric Acids 26

4.07 pH of Condensate 27

4.08 Component Profiling 28

5.00 Marijuana Smoke 31

6.00 Smoke Inhalation Methodology Project 32

6.01 Interim Smoke Generation-Exposure Apparatus 33

6.02 Labelled Cigarette Smoke 37

7.00 References 41

8.00 Tables and Figures 44

LOCKHEED MARTIN ENERGY RESEARCH LIBRARIES

3 4456 0515076 0

SUMMARY

Chemical assays are being established and applied to the smokes of experimental cigarettes. Cigarettes are smoked to determine total particulate matter, water, nicotine, and tar. The gas phases of smokes are analyzed for their contents of acetaldehyde, acrolein, carbon monoxide, carbon dioxide, formaldehyde, oxides of nitrogen, hydrogen cyanide, and acidity (pH). Smoke condensates are analyzed for water, acetone, nicotine, nicotine alkaloids, nornicotine, colorimetric phenols, phenol, o-cresol, m-cresol plus p-cresol, titrimetric weak and very weak acids, pH, phenanthrene, benzo(a)pyrene, and benz(a)anthracene. Other components may be determined on a non-routine basis.

Procedural modifications have been identified to further increase the reliability of the particulate matter analyses. The deliveries of all of the selected gas phase components have been determined for the full series of cigarettes. Complete analyses of submitted condensates are in progress.

The cryothermal gas chromatographic method for the determination of acetaldehyde and acrolein has been modified. The method for the determination of carbon monoxide and carbon dioxide has been studied in detail. The sampling technique for the determination of oxides of nitrogen has been modified to allow the analyses of composite samples. The system for the measurement of gas phase pH has been modified to produce more reliable results. A brief survey of the direct measurement of the redox potential of smokes was carried out.

Procedures for the measurement of smoke condensate components are under study. The reliability of the water-acetone determination has been found sensitive to column pretreatment. Gas chromatographic nicotine values are compared to spectrophotometric total alkaloid values. Colorimetric phenols are compared to gas chromatographic determinations of individual phenols. The use of polar Apiezons and the adoption of new procedural details have improved the determinations of polycyclic aromatic hydrocarbons. Titrimetric acids are now determined routinely. Component profiling may prove useful for the more complete characterization of smokes. Preliminary examinations of Code M condensates have been completed.

An interim smoke generation - exposure apparatus has been designed, fabricated, and is in use by colleagues for the study of cigarette smoke inhalation methodologies. Preliminary examinations of radiolabelled cigarettes for lung deposition measurements have been carried out.

1.00 INTRODUCTION

The Tobacco Smoke Analyses Program was designed to provide chemical support for the biological testing of experimental cigarettes. Activities have expanded to include evaluating the methodologies employed for the chemical analyses. Improved methodologies are developed to supplant those of questionable utility. The data generated is reviewed relative to the reliability of the analyses to separate real differences between cigarettes from experimental variability. Facilities are being readied to allow correlating the deliveries of various components with one another or with the characteristics of the cigarettes and biological data. A recent involvement in the problems associated with the inhalation bioassay of cigarette smokes further extends the responsibilities of this program.

The primary function of this program continues to be the generation of data for the chemical characterization of the smokes of experimental cigarettes. Quantitative determinations of selected components of particulate matter, gas phase, and condensate provide the core of the chemical characterization of the smokes. Exploratory studies of novel analytical techniques for the further characterization of smokes are carried out as possible. Virtually the entire effort of this report period was directed at finalizing the required procedures and carrying out analyses. The tone of this report reflects this emphasis.

The data generated and the procedures employed are submitted as separate reports. This report summarizes the progress made from approximately September 1, 1970 to July 1, 1971.

2.00 PARTICULATE MATTER COMPOSITION

The results of the analyses of particulate matters carried out at this facility were studied in considerable detail (14). The primary conclusion was that this facility could generate such results with a precision comparable to that provided by more experienced laboratories. This conclusion remains valid to date. However, additional studies of the results and procedures suggest procedural improvements certain to increase the reliability of future analyses.

Maintenance of the controlled environment room at 75 ± 2°F and 60 ± 2% relative humidity is critically important. This is particularly important for cigarette conditioning and only somewhat less critical during analytical smoking. Although there is no reason to believe that major fluctuations in temperature and humidity occurred during the analyses of particulate matters (temperature and humidity sensors indicated constant conditions) it is possible that minor fluctuations and/or poor uniformity prevailed at some point(s) during the analyses. This possibility is suggested by recent severely erratic environmental control upon repair of the building air conditioning system. Rapid severe changes in outside weather has also been found to influence the precise conditions in the smoking room.

An Aminco Aire system has been identified which is capable of providing the necessary environment independent of the building air circulation system and with substantially improved uniformity throughout the room. Cigarettes will be conditioned for longer periods and smoked under superiorly constant conditions.

It is also felt that increasing the number of cigarettes examined to provide port samples will increase the precision and reliability of the analyses. A rapid weighing digital balance is now on hand to make this practical. Two hundred or more cigarettes will be weighed to establish a reliable average weight for each code. A minimum of one hundred cigarettes will then be examined to provide port samples for each analysis.

The manual weight selection of cigarettes from pools of one hundred or more is laborious and excessively time consuming. A program has been designed by local computer experts which suggests that weight selection

can be accomplished automatically. The additional possibility exists that the balance can be interfaced to a small computer thus freeing the chemist from all operations other than loading the balance pan.

A decrease in the time necessary for weighing and weight selection of cigarettes should afford the opportunity to routinely evaluate the resistance-to-draw(RTD) of the selected cigarettes. Although not specified in early protocols, it is felt that added selection via RTD will increase the precision of the analyses.

The use of the Kentucky Reference Cigarette as a monitor cigarette is adequate but not ideal. A more uniform cigarette is preferable. An R. J. Reynolds in-house monitor has been provided (31) for use in upcoming analyses. Attempts will be made to include a complete analysis of the monitor frequently rather than simply determining its puff number. The Kentucky Reference Cigarette will be studied as a possible secondary monitor. It may be found necessary to employ the Kentucky Reference Cigarette as the primary monitor to insure comparability with the previous analyses.

Because each of these refinements deals with sampling, they have an equal bearing on the generation of results for gas phase components. The second characterization of the smokes of the experimental cigarettes will not begin until it is possible to incorporate the described refinements. Considerably superior inter-laboratory comparison should result.

The single remaining departure from common practice is our use of a four-port rather than a twenty-port machine. Although theoretically the same, differences in air flow patterns between the small four-port hood and large twenty-port hood could conceivably influence the results.

3.00 GAS PHASE COMPOSITION

It was previously reported (14) that preliminary results for acrolein and acetaldehyde had been generated and methodologies for the analysis of other gas phase components were under development. Procedures have now been finalized, tested, and applied to the full series of experimental cigarettes. Data are now available (16) on the gas phase deliveries of carbon monoxide, carbon dioxide, oxides of nitrogen, hydrogen cyanide, formaldehyde and acidity by each cigarette code. Summarys of the evolution of the applied procedures and critical assessments of their performance follow.

3.01 Acetaldehyde and Acrolein

The cryothermal gas chromatographic procedure described in the previous report (14) continues to provide results with good precision. Greater reliability is now possible with the incorporation of the column known to resolve methylacetate from acrolein (14). A study of early results suggests, however, that a systematic error has produced poor accuracy. Results reported for acrolein appear to be approximately 50% of that expected while acetaldehyde appears approximately 10% high (17).

The problem has been tentatively resolved. The smoke transfer line has been rerouted in order to bypass the extensive flow lines and valve sections associated with the gas sampling - column switching valves. The smoke samples are now routed directly from the sample loop to the head of the column. This modification greatly reduces the sample transfer time and the metal surface area contacted by the sample. Both reductions would be expected to reduce the chances of losing highly reactive acrolein to either condensation or reaction. The modified system has produced gas phase values for acetaldehyde and acrolein from the IRI cigarette of 988 μg and 97 μg respectively as compared to 1213 μg and 58 μg respectively generated by the original system. The new results are in better agreement with expectations.

The finding of a decrease in the value for acetaldehyde is inconsistent with the reasoning that losses have been minimized. If this were the

only factor operating, acetaldehyde results would be expected to increase or, at best, remain constant. A study of this problem suggests that the acetaldehyde employed for preparing standards had partially polymerized resulting in the use of an erroneous calibration factor. The decrease in the calibration factor more than compensates for any losses of acetaldehyde to the excess flow lines.

It appears that the modified system will be capable of producing results in good agreement with those produced elsewhere. It must be emphasized that the procedure remains an empirical one. Although perhaps capable of greater precision, we cannot be certain that the results are any more accurate than those produced by existing methods.

Because the interfaced smoker-analyzer is inherently capable of an accuracy superior to existing systems, we plan to study the system further. Experiments are planned to assess the possibility that some acrolein or acetaldehyde is lost to reaction while stored at the head of the column. The importance of the length of the sample transfer lines and materials used for constructing the sample loop will be considered. The "purity" of the chromatographic peaks for acrolein and acetaldehyde are under study.

3.02 Carbon Monoxide and Carbon Dioxide

The balloon trapping technique described previously (14) was found applicable to the determination of carbon monoxide but not carbon dioxide. Several alternate trapping techniques were studied in some detail. The following is a brief summary of the evolution of the finally applied procedure.

A Filamatic pump with a means of timing the puff interval and the duration of the puff is used to smoke the cigarettes. The smoke is drawn through a Cambridge filter and two solenoid valves. One of these valves serves as an exhaust port for the generated smoke while the other assures pressure equalization to ambient on both ends of the cigarette prior to the puff cycle. Each puff is exhausted into an appropriate container (trap) to provide a sample of the entire delivery of the cigarette. The content of the container is then analysed. Figure 3-1 illustrates the action of the solenoids. The machine is discussed further in section 3.04.

The trapped gas phase is sampled by use of a vacuum manifold and tandem gas sampling valves with a sample loop. A diagram of the system is shown in Figure 3-2. Sample from the loop is swept into either a 3 ft. x 1/4 in. column of 20 to 35 mesh molecular sieve 5A for the determination of CO or into a 5 ft. column of 80 to 100 mesh Porapak Q for the determination of CO_2. The oven temperature is maintained at 70°C and helium carrier gas flows through each column at 50 ml/min.

The first method of collecting the gas phase was to exhaust it into an ordinary rubber balloon. The balloon was attached to the Filamatic outlet via short section of rubber tubing and a glass stopcock closure (22). Reproducible results were obtained for CO sampled from the balloon, but CO_2 values diminished for each succeeding aliquot taken. Figure 3-3 illustrates the loss of CO_2 from a rubber balloon. The half life of CO_2 in this container was approximately one hour.

In the second experiment a 500 ml glass bulb was evacuated to 25 microns or less, and the output of the Filamatic pump was collected in the bulb. Samples taken from the bulb were reproducible for both CO and CO_2, but it was noted that the CO values were about 20% below those obtained from the balloon. The volume of the vacuum system was determined by use of a carefully calibrated bulb filled with air. A cigarette was smoked into the bulb, and the volume of the smoke was determined by calculation from the initial and final readings of the manometer. The expected volume for a 12-puff cigarette was 420 ml. The calculated volume was 504 ml. Expelling smoke from the piston of the Filamatic into a hard vacuum apparently causes some air to slip past the piston rings and to dilute the sample. This experiment was repeated and the volume of each puff was calculated. The initial puff was found to contain 49.2 ml; the 12th puff, 35.4 ml.

In the third experiment, the smoke was discharged into a Vol-U-meter. This is a device for measuring volume displacement for calibrating flow meters, and consists of a precision-bore pyrex tube containing a polyvinyl float with an adjustable mercury seal. The float is suspended by a column of air or other gas, and will remain in place until the volume below it is changed. However, when the float was displaced by the filtered

cigarette smoke, the mercury seal collapsed probably due to lowering of the surface tension between the mercury and the glass wall. This device proved to be unusable for collecting smoke.

An analog of the Vol-U-Meter was constructed (Figure 3-4) of a 24" length of pyrex pipe with an ID of 2 ± 0.005 inches fitted with a standard flange and needle valve at the bottom. A Teflon float (Figure 3-4) was constructed with a thin lip at its bottom. This design allowed the float to move up the tube with ease. The weight of the float caused the lip to spread thus providing an adequate seal to prevent rapid leakage.

The displacement of the float in the tube was calculated, and found to be within the expected experimental error of the standard 35-ml puff. This device, dubbed the "Tower" by co-workers, was used successfully for the determination of CO and CO_2 in 23 experimental cigarettes. There was a serious drawback to its use. Significant exchange with the room air did occur (Figure 3-5); the concentrations of CO and CO_2 were not constant for more than 30 minutes. This is sufficient time to obtain duplicate determinations for both CO and CO_2.

One final observation on the use of sampling towers is that there is a tendency for the sample to become stratified. This is particularly serious when the length:inner diameter ratio becomes large. Little stratification was noted with the sampling "tower", but much occurred when using the Vol-U-Meter. The first samples (corresponding to the bottom of the Vol-U-Meter and the last puffs) were consistently higher in CO and CO_2 content than were subsequent samples (corresponding to higher up in the Vol-U-Meter and earlier puffs). Admission of subsequent puffs is apparently not sufficient to provide thorough mixing. A similar effect may operate when collecting the sample in large volume syringes.

The most successful and finally adopted procedure is to collect the gas phase in a collapsed (by evacuation) Saran bag (22). The procedure is essentially like that recommended for a balloon except that it is applicable to CO_2 as well as CO. No changes in CO or CO_2 concentrations were noted after as much as six hours. An added advantage of this system over the others examined is the convenience with which one container can be analyzed while another is collecting a second sample. Almost twice the samples can be run in a given time period.

The results reported (16) were obtained using Saran bags. A comparison of the results using the bag and tower samplers is presented in Table 3-1. The precision of the determinations are comparable.

The final area of improvement resides in the inadequacy of the smoking machine. The necessity of isolating the cigarette on the upstroke of the piston and equalizing the pressure in the system before each puff necessitates that some sample be lost. The loss, perhaps one percent of the sample, is small. It is also important to note that the smoking machine provides "restricted" smoking, that is, the cigarette is not open to the atmosphere between puffs.

The general adequacy of the overall procedure can only be tested by comparing the results generated here with those generated elsewhere.

3.03 Formaldehyde

The procedure described previously (14) has been applied to the determination of the formaldehyde deliveries of the experimental cigarettes. The precision of the results and general levels of formaldehyde found suggest this analysis is confidently operational. We await comment and/or collaborative data before considering this procedure finalized.

The determination of formaldehyde is among the least satisfying of those carried out as far as "accuracy" is concerned. The high reactivity of formaldehyde affords great opportunities for losses on the filter pad and by reaction at some time between delivery and trapping. The short residence time in the traps employed suggests the possibility of "blow-by". The spectrophotometric measurement is not specific for formaldehyde but rather for active carbonyl compounds. Considerable research may be necessary to develop a procedure which measures the quantity of formaldehyde actually in whole smoke. The present procedure (modified or a suitable alternative if found necessary by a review of the data) will continue to be applied unless formaldehyde is deemed sufficiently important to warrant developing a more sophisticated methodology.

Application of the method to the experimental cigarettes produced results ranging from 17 to 70 micrograms per cigarette with most delivering 30 to 40 micrograms. Results were generated with an acceptable 2.9% relative standard deviation.

3.04 Oxides of Nitrogen

The oxides of nitrogen delivered by the experimental cigarettes have been determined using the Saltzman (28) procedure. The method of Newsome et al (25) for collecting the gas phase sample has been modified to allow trapping the entire delivery of a cigarette in a single flask. This provides a composite sample representative of the entire cigarette rather than individual puffs. A description of the smoke generation-sampling system which makes this possible follows.

The smoking system is pictured in Figure 3-6 as it appears when in use for collecting samples of the gas phase for the determination of the oxides of nitrogen. The system consists of a Filamatic pump modified to provide the standard puff parameters and fitted with two solenoid valves. The piston of the Filamatic begins its downstroke (the puff begins) with the cigarette open to the pump. At the end of the 2 second puff and just prior to the upstroke of the piston, both solenoids (see figure 3-1) actuate. The cigarette is isolated from the pump and the generated smoke is exhausted into the collection vessel. Approximately two seconds after the smoke is exhausted, valve number one is actuated to isolate the sample while valve two continues to isolate the cigarette from the attendant pressure fluctuations within the system. This valve configuration is maintained for approximately 44 seconds giving ample time for system to reequilibrate to atmosphere pressure. Approximately ten seconds before the next puff, the cigarette is again opened to the pump. This sequence repeats for each puff until the cigarette is smoked and its entire delivery is trapped in the collection vessel.

The collection vessel in use here is a one liter gas washing bottle containing an appropriate (15) volume of the absorbing solution under reduced pressure. It is because of this reduced pressure that the cigarette must be isolated from the pump when valve one isolates the collected sample. The small area of reduced pressure at the head of the piston would otherwise cause perceptible secondary "puffs" after the controlled puff.

Approximately one minute exposure to laboratory vacuum (approximately 24 in H_2O) is sufficient to allow the containment of the full delivery of

a cigarette. This is evidenced by the observation that the vessels are still under reduced pressure after smoking even 13 puff cigarettes.

After smoking, the collection vessels are opened to the atmosphere to admit ambient air and bring the pressure to ambient. The vessels are closed and shaken for at least 30 minutes to allow time for the oxidation of NO to NO_2. The quantity of NO_2 present is then measured colorimetrically.

The proper operation and timing of the valves is critical. Failures in valve one can lead to blocking puffs or routing the sample out the wrong valve port. Failures in valve two can lead to blocking puffs or to secondary puffs. Failures in both valves or in timing can result in cigarettes being shot across the room. The three valve system described by Allman (1) may be less sensitive to these difficulties. However, once set, we have experienced no noticeable difficulty with the two-valve system.

The single known shortcoming of this system is that it necessitates the loss of some sample. The amount of sample contained at the prevailing reduced pressure in the volume between the head of the piston and the inlet of valve one is discarded. One would expect this loss to be smaller than that detectable within the precision of the method.

Applications of this method to the experimental cigarettes yielded results ranging from 63 to 771 micrograms, as NO_2, per cigarette with most delivering 300-500 μg. Care must be exercised to be certain sufficient colorimetric and trapping reagent is present for the analysis of abnormally high delivery cigarettes. The precision of the method was an acceptable 3.9% relative standard deviation.

3.05 Hydrogen Cyanide

The hydrogen cyanide deliveries of the experimental cigarettes have been determined using the ascarite trapping - colorimetric measurement procedure described previously (14). Deliveries per cigarette ranged from approximately 50 to 230 micrograms with most delivering between 100 and 200 micrograms. The results were generated with an acceptable relative standard deviation of 2.6%.

3.06 Gas Phase pH

The method of Sensabaugh and Cundiff (32) discussed previously (14) was applied to the determination of the pH of the gas phase of the smoke of each experimental cigarette. Discussions (33) with those responsible for the method revealed that substantial differences between the response of the system to whole smoke and to gas phase was to be expected. Although empirical, the procedure is found to produce results which are quite reproducible.

This procedure is considered fully operational pending comment and/or collaborative data to the contrary.

3.07 Sulfur-Containing Compounds

Insufficient time has been available to extend our work with the sulfur-specific photometric detector to include quantitative measurements. A technical note more fully describing the qualitative work has been submitted to Analytical Letters. Gas standards of H_2S and COS and a collection of organo sulfur compounds are now on hand to further the study. A system of generating and sampling the smokes under conditions more closely approximating analytical smoking must be constructed for the quantitative work.

3.08 Oxidation - Reduction Potential

The utility of oxidation - reduction potential measurements on smokes has only recently been demonstrated (6, 18). Such measurements may prove useful in assessing the consumer acceptability of smokes as well as providing a measure of the smokes' possible influence on redox-controlled biological processes. The presence of free radicals in fresh smokes suggests the possibility of employing potential measurements in studies of short term smoke aging. These factors, coupled with the availability of superb electroanalytical instrumentation and expertise, prompted a brief survey of direct potential measurements of smokes.

The first experiments consisted of directing the smoke from commercial cigarettes into a thin-layer cell developed at this laboratory. It employs a mercury electrode. With a potential near 0.2v vs S. C. E. applied

to the mercury electrode, an anodic current was observed when smoke passed over the cell. It is thought that this current is due to oxidation of Hg in the presence of a complexing agent in the smoke, possibly HCN. Voltage scans were also made on the mercury electrode to determine if reproducible components could be detected in the smoke at more cathodic potentials. Because of oxygen which is necessarily present in the smoke, high background currents were observed, and no cathodic peaks could be established with confidence.

Further work was directed at making zero-current potential measurements, with a Pt wire, on the smoke. An electrode system was made in which a Pt wire was wrapped around the tip of a micro-colomel electrode; the tip of the electrode was dipped into an electrolyte solution. The solution remaining on the tip provided electrical conductivity between the wire and calomel electrode. The potential of this electrode system was recorded continuously as smoke was drawn past it with a smoking machine. Definite changes in potential are observed with this system as the cigarette is smoked. As each puff is taken on the cigarette, the potential of the electrode shifts cathodically. Each successive puff causes a cathode shift of lesser magnitude until a final constant potential is attained.

The fact that a potential response can be observed for fresh smoke is encouraging. Obvious questions concern the meaning of the electrode response relative to the potentials determined colorimetrically. Whether the observed electrode potentials are related to the smoke as a whole or only to a small number of highly electroactive compounds present at high concentrations is also to be determined. The use of the redox potential as a measure of changes in composition of smoke on standing might also be evaluated.

4.00 SMOKE CONDENSATE COMPOSITION

The final production of the condensates from the full series of experimental cigarettes is tentatively scheduled for initiation on 9/1/71. The entire effort of this facility is now, therefore, directed at the chemical characterization of these condensates. Routine analyses and final development work are proceeding concurrently.

Control analyses are performed by the condensate production contractor, Meloy Labs. The results of these analyses provide a measure of yield of condensate per cigarette and the approximate dosage of tar per bioassay application. Results for a given cigarette smoked at different times provides a measure of the reproducibility of the production scheme and of the material bioassayed.

Analytical determinations carried out at ORNL are intended to provide a substantially more complete chemical characterization of the condensates. More components of the condensates are measured. Presumably, more sophisticated methodologies are employed. Through the adoption of the spectrophotometric methods of measuring nicotine alkaloids and phenolics as added routine assays by this group, more confidence can be placed in levels reported for nicotine and the phenols. The acidity of condensates is assessed both by pH measurements and titration. In addition, the analyses for water, acetone, and gas chromatographic nicotine carried out at Meloy Labs are repeated at ORNL. The results of these analyses will be correlated with the results of the bioassay.

Care must be exercised in comparing Meloy and ORNL results. Differences in procedure, skill of the analyst, state, age, and history of the sample will all contribute to differences in the results. Samples received at ORNL at a given time varied, occasionally, in age by as much as five weeks further complicating close comparisons.

Although a general measure of the influence of shipment and storage on the stability of the condensate may emerge from a study of Meloy vs ORNL results, a more carefully controlled experiment is preferable. Plans are being formulated to periodically monitor the water, acetone, colorimetric phenols and nicotine alkaloids at various times after receipt during

the study of the final series of condensates. The on-site generation of condensates, scheduled for after the characterization of production condensate, will afford the opportunity to examine problems of aging and stability more thoroughly if this is found desirable.

4.01 Water and Acetone

The method of Schultz and Spears (29) was modified (14, 15) for the analyses of water and acetone in condensate suspensions and has been in routine use. A chromatogram typical of those generated by condensate samples and typical calibration curves for water and acetone are presented in Figure 4-1 Analyses of four aliquots consistently produces results with a relative standard deviation of 5% or less.

Care must be exercised in preparing new Porapak Q columns for this analysis. One batch of Porapak Q failed to provide reproducible chromatograms. It has also been found that it is necessary to condition the columns at the maximum recommended temperature to obtain quantitative results even though the column is operated 70-80°C below the maximum for these analyses.

The condensate production protocol has been changed to provide suspensions containing approximately 50% condensate rather than 65% as originally planned. This change is reflected (16) in the analyses performed here. The quantities of water and acetone used for the preparation of calibration curves were changed (15) to include the new levels of water and of acetone expected in the samples.

4.02 Nicotine and Nicotine Alkaloids

The nicotine contents of the condensates are being routinely determined by two procedures. Nicotine alkaloids are determined spectrophotometrically and nicotine by gas chromatography (Figure 4-2). Results are generated with good precision, relative standard deviations consistently better than 5% using either procedure.

Comparisons of the absolute results generated by the spectrophotometric procedure with those generated by chromatography and the widely different nicotine contents for condensates from given cigarettes reported

by Meloy Labs have prompted a further investigation of the procedures. The spectrophotometric procedure is purported to produce a measure of the total alkaloids; nicotine plus minor alkaloids. Results generated spectrophotometrically would, thus, be expected to be larger than those generated chromatographically. A study of our results reveals the opposite to be true. The fact that the spectrophotometric procedure has consistently yielded reproducible results in hundreds of analyses of particulate matter and many analyses of condensates coupled with the observation that Meloy Labs employs a chromatographic procedure similar to our own, suggested some difficulty with the chromatographic method.

Twenty aliquots of a given condensate were withdrawn for a study of the procedure. Three to four aliquots each were analyzed by the following procedures: (a) spectrophotometric total alkaloids, (b) steam distillation-extraction-carbon-14 nicotine recovery-gas chromatography (essentially the method of Hoffmann (37)), (c) direct gas chromatography and (d) dimethylphthalate internal standard gas chromatography, (Mumpower and Kiefer(24)). The average results in weight percent of sample were: (a) 5.4, (b) 6.3, (c) 6.5, and (d) 6.0. The difference between the spectrophotometric and chromatographic results were greater in this study than was normally observed for condensates.

Since widely differing sample treatment techniques produced comparably "high" results, the difficulty was suspected to reside in some aspect of the chromatography itself. Difficulties with the Casterwax column, used for each chromatographic determination in the above study, and the purity of the nicotine standards were suspected.

Fifteen aliquots were withdrawn from a different condensate and groups of three to four were analyzed as follows: (e) spectrophotometric total alkaloids, (f) internal standard gas chromatography on Casterwax, (g) internal standard gas chromatography on DC550, and (h) distillation-extraction-carbon-14 recovery-Casterwax gas chromatography. Nicotine newly purified by preparative gas chromatography was used to prepare standards. The results of these analyses, again as weight percent of sample were: (e) 4.7, (f) 4.9, (g) 4.8, and (h) 4.3.

Several additional studies are required to fully interpret the data summarized above. Result (h), above is the first time we've noted

substantially smaller quantity by chromatography and must be verified before taken too seriously. Standard addition experiments could be employed to learn whether the spectrophotometric procedure is providing lower than true results. Our interpretation of the results now on hand is that the minor alkaloid contents of most of the condensates are so low (see sec. 4.03) as to provide essentially no contribution to the spectrophotometric measurement. It would therefore be reasonable to expect the results generated by the procedures to be the same within their respective limits of error.

4.03 Nornicotine

The quantitative determination of nornicotine in smoke condensates has proven to be a more difficult task than was anticipated. The difficulty results from the fact that nornicotine is a minor component among many diverse major components. The typical solution to such a problem, fractionation followed by concentration, is not readily applicable because of the absence of a good means of assessing losses resulting from the sample treatment. Carbon-14 nornicotine is not available. Standard addition techniques and using a compound "similar" to nornicotine as a cold tracer are not very satisfying when interest is in producing a true value for nornicotine. Such approaches may suffice for determining the relative contents of nornicotine among the test condensates.

The gas chromatography of nornicotine itself presents little difficulty. We have successfully chromatographed stock solutions of nornicotine on Carbowax 20M, Carbowax-TPA, Polyethylene Glycol 6000, and DC550. Nornicotine is readily separated from nicotine by each of these systems as well as many others tested. Separating nornicotine from each of the other minor alkaloids, particularly anabasine and myosmine, presents a greater, but manageable problem. At that, a value for nornicotine plus anabasine or myosmine would probably be sufficient - provided one realized that both species were being measured.

Chromatograms generated by a solution of unfractionated condensate contain a peak which corresponds well with co-chromatographed nornicotine. The peak is, however, very small and located on the tailing edge of the solvent

response amid many other, larger, peaks. This behavior makes the analyst question whether he is observing nornicotine or some other component. An added complication for gas chromatographic methodologies is that the nornicotine available for standardization is very impure. Considerable care must be exercised in evaluating the purity of the standard nornicotine. Neopentyl glycol adipate and casterwax provided a single, symmetrical peak for our stock nornicotine, whereas Carbowax-20M and PEG 6000 reveal the presence of at least two major impurities.

Anticipating that a measure of minor alkaloids is adequate for the purposes of this program, we have begun a study of the spectrophotometric method of Bowen and Barthel (8). The method is expected to produce a value which is the small difference between two large values. This is far from ideal. If the approach proves workable, there would be several advantages over gas chromatographic methodologies. We would know the results to be empirical with no pretense that we are reporting values for nornicotine alone. Nicotine can be used for the preparation of standards thus avoiding the use of highly unstable and impure nornicotine.

We have not abandoned the search for a reliable approach to the determination of nornicotine alone. Polybutylene glycol, suggested by Schultz and Bell (30), will be tested as a separating phase when it is located. The most promising approach, utilizing an electrolytic conductivity nitrogen specific detector, will be tested as soon as possible.

4.04 Phenol and the Cresols

The phenolic contents of the condensates are being routinely determined by a dual procedure. Sets of three to four samples are withdrawn from the sample condensate and steam distilled. A portion of the distillate is analyzed colorimetrically (26) while the remainder is extracted with ether, concentrated, and analyzed gas chromatographically (26, 37). Carbon-14 phenol is used to correct for losses resulting from the extraction and concentration procedures.

The only problems noted thus far deal with the quantitative gas chromatography of the phenols. The stainless steel column originally employed for developing the method began to privide poorly reproducible

chromatograms. This prompted the construction of pyrex columns with an attendant superior reproducibility. Resolution, particularly of o-cresol from phenol, has been found to decrease with the age of the packing - whether or not it has been in use for the analyses. The change is sufficiently slow to allow a given column to be used for several weeks without noticeable deterioration. Lower operating temperatures easily provide the necessary resolution but at a sacrifice in longer separation times. Standards are run to provide new calibration curves each day. Samples are analyzed to insure proper operation. A chromatogram of a typical condensate sample is given in figure 4-3.

Methanol is employed in three critical phases of this analysis. It is used to prepare gas chromatographic standards, is added to the final ether extract before concentration to act as a scavenger and is employed to transfer the weighed samples into the still pots. A question might arise concerning the possibility of methyl ether formation. This was examined using known solutions. No evidence for methyl ether formation was observed in the time required for the analysis.

Typically, 70% of the phenol is recovered from the sample for gas chromatographic analysis. Recoveries in the 80-85% range are occasionally observed and could be made commonplace with greater operator attention. No particular advantage is gained by the slightly increased recovery relative to the increased analysis times. It should be emphasized here that recoveries are truly accurate only for phenol and are simply approximations for the cresols. The cresols would be expected to behave differently from phenol in extraction and evaporative concentration procedures. This is evidenced by occasionally noticeable differences in the relative quantities of cresols: phenol in different aliquots of a given condensate sample.

A consideration of the data generated for the twelve condensates analyzed at this writing reveals that the quantity of phenol found gas chromatographically is always smaller than that found colorimetrically. This is to be expected (26). When the colorimetric phenols are compared to the total gas chromatographic phenols (phenol + cresols) we find the results to be essentially identical. The absolute difference between the results seldom exceeds 0.06% of the dry condensate.

One might expect that the colorimetric phenol value should be substantially larger than the chromatographic phenol plus cresols because other phenolics, not visualized by the chromatograph, contribute to the colorimetric result. This would be the case only if the colorimetric procedure was equally sensitive to all the phenols. We have determined experimentally that only approximately 20% of the cresols present are visualized if determined colorimetrically as phenol. It is likely that the contribution of a larger number of phenolics to the colorimetric procedure is offset by the lower sensitivity of procedure to these phenols. Comparable results from each procedure would thus be reasonable.

Both procedures are capable of providing results with relative standard deviations of less than 5%. The procedures appear to be confidently operational.

4.05 Polycyclic Aromatic Hydrocarbons - Phenanthrene, Benz(a)anthracene and Benzo(a)pyrene

Although perhaps the single most extensively researched chemical assay in the tobacco sciences, a detailed, characterized methodology for the determination of polycyclic aromatic hydrocarbons in condensates is not readily available. This is particularly the case for the sequential determination of the three polycyclics which are this facility's responsibility. The requirement of a large number of these analyses, in triplicate, over a short period of time and with limited man power complicates the task. The primary activity of the present report period has been directed at developing a reliable, characterized procedure which can be executed in a reasonable time. The primary steps (extractions, column chromatography, etc.) in the general procedure recommended by Hoffmann (19, 37) and the Tobacco Working Group have generally been found to be necessary but subject to modifications which tend to expedite the overall analysis.

The overall procedure now in use is summarized schematically in figure 4-4. Details are reserved for the collection of analytical procedures submitted separately (15). General comments concerning the various steps in the procedure follow.

Sampling the condensate and preparing for extraction. A sample weighing approximately six grams (three grams of dry condensate) is withdrawn from the shipping container using a Pasteur pipette. Five to seven pipette loads are required to accumulate the total required sample. A single transfer using a 5 milliliter analytical pipette is unsatisfactory as evidenced by a visible stratification according to density during the filling process. The many small samplings have the added advantage that the tip of the pipette is located at different points relative to the vortex in the stirred condensate suspension. Samples drawn in this way are homogeneous as evidenced by reasonable precision in triplicate determinations of polycyclics and of total alkaloids and colorimetric phenols. As an added precaution against losses to evaporation on storage, the samples for the eventual determination of polycyclics are drawn at the same time samples are drawn for water-acetone determinations.

Appropriate quantities of radiolabelled phenanthrene (Phen), benz(a)-anthracene (BaA), and benzo(a)pyrene (BaP) are added to the samples after the weights of the samples are determined. The samples are then capped and stored in a freezer until needed. When ready for analysis, the samples are thawed and the acetone is drawn off under reduced pressure. Removing the acetone may not be absolutely necessary.

Liquid-liquid extractions. The dried condensate is "dissolved" in methanol-water and extracted four times with cyclohexane. This extraction poses no difficulty. Rather than concentrating the cyclohexane and extracting with nitromethane as was originally suggested, the combined cyclohexane extracts are then extracted with dimethylsulfoxide (DMSO). This eliminates one concentration step, requires a fewer number of extractions, and provides the distinct advantage that the aromatics can be back-extracted into cyclohexane. The end result of the extraction scheme in use here is a cyclohexane solution enriched in polycyclic aromatic hydrocarbons. The cyclohexane is easily evaporated and potential problems with nitromethane deactivating the subsequently employed alumina columns are totally avoided. Using this extraction scheme, it is possible for one operator to complete all of the necessary extractions on four sample aliquots in a single day. The only problem noted to date with the use of DMSO is the occasional

formation of highly stable emulsions during the back extraction step. Whereas emulsion formation is common at water:DMSO of 2:1, it is very rare at a ratio of 1.5:1. Lowering the water:DMSO ratio might be expected to remove the problem completely.

Florisil column clean up. The final cyclohexane product may be concentrated by evaporation to a volume of less than 0.5 ml of a highly colored, syrup-like mass. Following a suggestion by Bell (4, 5), we examined the utility of Florisil as an additional purification agent. The concentrate was transferred with benzene onto a column of approximately 10 ml of Florisil in a 25 ml burette and the sample was eluted with 75 ml of benzene. The clean up, visually very dramatic, removed essentially all of the colored material and produced a sample containing 25-50 μl of polycyclic enriched material. A brief consideration of the recovery of the three polycyclics of interest from the Florisil indicates that essentially none is lost. The Florisil step has been adopted as a permanent part of our PAH procedure.

The adoption of the Florisil procedure constitutes a second major improvement over the initially recommended procedure. The greatly reduced sample size of higher purity generated at this point in the procedure allows the use of smaller alumina columns and faster separations. Also, it was not until the Florisil step was adopted that the fluorescence spectra of isolated BaA agreed well with that produced by standards. The great reduction in impurities has made all of the subsequent steps in the procedure much more reliable and convenient.

Alumina column chromatography. The suggested alumina column chromatographic separation of Phen, BaA, and BaP involved the use of a 2 cm i.d. column approximately 29 cm in length. Elution with the recommended hexane and hexane-benzene solutions consumed more than a liter of the eluents and required eight to ten hours to complete the separation. The use of smaller condensate samples and, particularly, the prior use of Florisil allows a major reduction in column dimensions with attendant drastic reductions in reagent consumption and separating time. A standard 25 ml burette with an internal diameter of approximately 9 mm packed with approximately 19 ml of activity II alumina now serves as the routine analytical column. Eluting with hexane then 8:1, 6:1, 4:1, and 3:1 hexane:benzene solutions provides

the necessary separation in 3-5 hours and requires less than 400 ml of eluent. An alumina column 5 mm in internal diameter has been tested and found equally applicable.

The separations achieved with the various alumina systems are summarized in figure 4-5. The separation of BaA from BaP, though not complete, is easily adequate for the analysis. In addition to providing faster separations, the smaller columns allow the collection of smaller fractions and, thus, a decrease in the time required for evaporative concentrations.

The substitution of DMSO for nitromethane, adoption of the Florisil step, and use of smaller alumina columns has reduced the time necessary to produce triplicate samples of the polycyclics for final treatment by at least 75%.

Determination of Phenanthrene. The direct spectrophotometric measurement, either fluorescence or UV absorption, of the phenanthrene composite from the alumina column provides meaningless results. The composite contains many components in addition to phenanthrene which contribute to the measurement. Many of these impurities are discarded if only that alumina fraction corresponding to the center of the phenanthrene peak is taken for analysis. Many components, anthracene in particular, will continue to be present. Subjecting the composite to paper chromatography on aceylated cellulose improves the purity but does not separate anthracene from phenanthrene.

A gas chromatographic system capable of resolving anthracene from phenanthrene was sought. A 20 ft. by 1/8 in. column of 20% Apiezon L on Gas Chrom P suggested by Hoffmann (19) provided a slight separation. Separation times, particularly including the time necessary for later eluting impurities to emerge from the column, appeared excessive in our hands. A 6 ft. by 1/4 in. Carbowax 20M - TPA column (21) prepared here did not provide the necessary resolution. Columns, ranging in dimension from 6 ft. by 1/4 in. to 20 ft. by 1/8 in., packed with OV-101, OV-17, XE-60, OV-101/NaCl (13), Apiezon L, Apiezon N, and Dexsil 300 showed varying degrees of promise. None were completely satisfactory.

During the survey of various column packings, it was noted that Apiezon N provided a superior resolution of anthracene from phenanthrene

in a somewhat shorter time than did Apiezon L. As this is the reverse of expectations, Apiezon L is less polar than is Apiezon N (23), the observation prompted an examination of the more polar Apiezons H and W. Columns of 6 ft. by 1/4 in. pyrex packed with 4% Apiezons M, L, N, H, and W on 80-100 mesh Chromosorb G (HP) were systematically studied. Increasing polarity of the Apiezons was accompanied by an increasing separation of anthracene from phenanthrene. Chromatograms generated by an actual sample of phenanthrene using Apiezon W at several temperatures are given in figure 4-6. Analyses carried out at the higher temperature, where resolution is not as good, were found to produce essentially the same results as those carried out at the lower temperature. Higher temperature operation shortens the analyses time considerably.

Phenanthrene is now determined directly in the alumina column composite by gas chromatography with 6 ft. by 1/4 in. columns of Apiezon W. Although separation is slightly poorer, comparable columns of Apiezon H are equally applicable to the determination. Twenty foot by 1/8 inch columns of Apiezon H or W provide better separation than do the shorter columns. Six foot columns are generally used here for convenience of preparation. Less "blow-back" of samples occur with the shorter columns because the carrier gas head pressures required are smaller. Higher operating temperatures required to elute the sample components in reasonable times tends to decrease the practical sensitivity attainable with the longer columns.

The final remaining question in the procedure for the determination of phenanthrene concerns the purity of the gas chromatographic phenanthrene peak. The reproducibility and symmetry of the peak suggest it contains no major contribution from other compounds. Results generated using the column agree reasonably well with those generated elsewhere (35, 36). The purity of the peak is being examined mass spectrometrically as a final test.

Determination of Benz(a)anthracene (BaA). As was observed for phenanthrene, the alumina composite of BaA is much too impure for direct spectrophotometric measurement. Paper chromatography on acetylated cellulose separates the BaA-Chrysene pair but does not provide a pure BaA sample. Fluorescence measurements on the BaA extracted from the paper continually produced results in the 4-6 ppm range, a full order of magnitude higher than

anticipated. Repeated paper chromatography of the BaA spot was accompanied by a regular lowering in the quantity of BaA found by fluorescence. The result continued to decrease after as many as four additional paper chromatographic treatments without approaching a reasonable level. Thin layer chromatography and paper chromatography with different developers failed to provide BaA pure enough for meaningful fluorescence measurements. Ultra violet absorption spectrophotometry was found no better. Both UV and fluorescence spectra confirmed the presence of impurities. Lower values and better spectra were observed after the adoption of the Florisil step but results remained high.

Levels of BaA presented by Wynder and Hoffman (37) suggested that gas chromatographic measurement would be possible only with very high sensitivity detectors or substantially larger initial samples of condensates. Levels of BaA reported elsewhere (3, 10, 34) suggested that standard gas chromatographic methodologies would be applicable to its determination. The difficulties encountered in preparing a pure BaA subfraction coupled with the successful gas chromatographic determination of phenanthrene prompted a study of gas chromatography for the measurement of BaA in our corresponding subfractions.

Figure 4-7 illustrates one result of this study. Not only is it possible to visualize the BaA but, using Apiezon H or W, it is possible to separate chrysene from BaA. A 10 μl aliquot of a final 0.1 ml BaA concentrate from approximately 3 grams of dry condensate is sufficient for visualization with a hydrogen flame ionization detector.

The ability to separate chrysene from BaA suggested the possibility of determining BaA directly in the alumina column composite. A BaA composite was concentrated to 0.1 ml and analyzed on Apiezon H (Figure 4-8). The same sample was then subjected to paper chromatography on acetylated cellulose, the BaA spot was extracted from the paper, concentrated to 0.1 ml and the concentrate was analyzed again on Apiezon H. The result, 0.83 ppm, for the direct analysis compared well with the 0.71 ppm found after paper chromatography. Both values were corrected for losses using ^{14}C-BaA.

Apiezon H and Apiezon W are uncommon gas chromatcgraphic liquid phases. Apiezon H is listed (2) as being applicable to 300°C. We are

not aware of a stated temperature limit for Apiezon W. Both phases have been found reliable and stable for long periods of operation at the 190 ± 20°C required for the analysis of phenanthrene. The higher temperatures, approximately 240-280°C, required for the analysis of BaA appear to produce shorter column lifetimes. Resolution may deteriorate after only a few days and "noise" apparently associated with "column bleed" is not uncommon. The possibility that these observations result from instrumental rather than column factors is presently being investigated.

To date, the paper chromatographic step in the BaA procedure has been retained. The additional time involved for the operators, though significant, is not excessive because the BaP subfraction requires the same treatment. The BaA subfractions are simply chromatographed at the same time. No or very little chrysene has been detected in the BaA subfractions analyzed after paper chromatography. Since separation from chyrsene is not required of the gas chromatographic column, the methyl silicone OV-101 is being tested for the final measurement. If results using OV-101 are the same as those using Apiezon H, OV-101 may be employed with substantially shorter separation times and higher practical sensitivities.

As for the determination of phenanthrene, the final important question is the purity of the gas chromatographic peak attributed to BaA. The retention characteristics of the BaA peak agree well with those of authentic BaA on Apiezon H, W, and OV-101. The symmetry of the peak suggests that no major impurities contribute to the BaA measurement. Results generated with Apiezon H are in general agreement with those generated elsewhere (34, 36). The purity of the BaA peak is presently under study using combined gas chromatography-mass spectrometry.

Determination of Benzo(a)pyrene (BaP). The procedure for the determination of BaP by fluorescence spectrometry has required very little attention. BaP is well separated from BeP by the paper chromatographic step. The fluorescence spectra of the BaP isolate agrees well with that for authentic BaP. The precision of the determinations has been acceptable.

The only problem noted to date is the occasional generation of negative results. As 14-C-BaP is used for recovery determinations, negative results can only be generated by some systematic error in carrying out the

procedure. The specific activity of the 14-C-BaP, required for the recovery corrections, was suspect but found to be essentially as reported by the supplier. The possibility of fluorescent quenching providing a lower than true result for BaP was examined by analyzing the same samples by gas chromatography (Figure 4-9). Results from both measurements were essentially the same, thus providing added confidence in the fluorescence measurement. The problem appears to be associated with the analysts use of too great a quantity of 14-C-BaP as a tracer. For those condensates low in BaP, a small volumetric error during the addition of 14-C-BaP or in final sampling can produce a negative result. This hypothesis is being examined.

4.06 Titrimetric Acids

It was previously reported (14) that the recommended method of Cundiff et al (11) provided good results with standard solutions but had not been tested with condensates. Applications of the same procedure to acetone suspensions of condensates provided poor results. It was often impossible to obtain any potentiometric response at all on suspensions containing the added acid spike. Discernible breaks in the titration curves could only be located using first derivative techniques. In those cases when the titration appeared to proceed properly, reproducibility was poor. Evaporating the acetone prior to dissolving the condensate in pyridine did not improve the results.

Methanolic tetrabutylammonium bromide was substituted for methanolic potassium chloride as the reference electrode electrolyte at the suggestion of Sensabaugh et al (33). An additional suggestion (33), boiling the pyridine condensate solution prior to its titration, was also adopted. These modifications were found to provide a workable procedure. Recent further considerations of the procedure suggest that the ratio of sample to spike is also critical in determining the shape of the resultant titration curve. Excessive sample produces poor end points. Insufficient sample produces poor precision. A sample between one third and three fourths of the spike content has been found to provide a reasonable compromise between resolution and reproducibility. Figure 4-10 illustrates the titration curves typical of those generated using the modified procedure.

This assay is considered operational. A collaborative study (35, 36) now in progress will determine the need, if any, of further modification.

4.07 pH of Condensate

An empirical method for the determination of the pH of the experimental condensates is now operational. Freshly weighed samples of condensates are contacted with sufficient carbon-dioxide free water to provide solutions approximately one weight percent in condensate. The pH of the aqueous solution is measured with a combination electrode. The possibility that the relatively large quantity of acetone in the sample might influence the pH reading was considered early in the development of the procedure. The presence of 0.5 wt % acetone was found to reduce the pH by 0.4 units relative to that for CO_2 free water containing no acetone. A larger quantity of acetone produced a larger decrease in the measured pH. The acetone effect disappeared, however, in the presence of standard acids or condensate. Adding acetone to standard acid solutions or adding more acetone to condensate samples did not change the measured pH values.

The practice of measuring solutions containing only 1 wt % condensate was dictated by several factors. Substantially more concentrated "solutions" result in large quantities of undissolved material which can physically interfere with the electrode response. The much greater sensitivity to acids than acetone of the electrode minimizes the opportunity of acetone to influence its response. Finally, measuring dilute solutions allows the use of practical sample volumes without consuming large quantities of condensate.

The single disadvantage to the use of a dilute condensate solution is that its pH can approach neutrality and be significantly influenced by dissolved CO_2. It is necessary to boil the extracting water before use to remove CO_2 and advisable to protect the sample from atmospheric CO_2 until the measurement is made. Analyses carried out here are performed under a nitrogen atmosphere.

Since the primary interest, generally, is to determine the relative acidities of the condensates, the pH of the extract may be recorded as the "pH of the condensate". The fact that the extract corresponds to a

100-fold dilution of the original sample must be taken into consideration if an approximation of the pH of the actual condensate is required.

4.08 Component Profiling

The presently confused situation regarding the chemical cause of the promoting and co-carcinogenic activities of tobacco smokes is typical of those critical problems which might be more quickly resolved through applications of novel analytical chemical techniques. The traditional approach of fractionating a large quantity of sample, subjecting each fraction to bioassay, identifying each component of the active fractions, and finally testing the suspected pure compound for biological activity may not always be necessary. In addition to being very time consuming, such an approach negates the opportunity to visualize biological effects resulting from the conjoint action of several individual compounds. As fractionation becomes more extensive, the matrix in which the active compound is exerting its effect becomes seriously unlike that in whole smoke or condensate.

As the shortcomings of bioassaying pure compounds and extrapolating the results to whole smoke or condensate become apparent, it becomes desirable to at least assay synthetic preparations of the highly suspect subfractions of smoke. There is no established means for proving that a synthetic preparation approximates an authentic subfraction in relative composition.

Research in experimental tobacco carcinogenesis has evolved to the point where basic product modifications are engineered into cigarettes in an attempt to lessen the health hazards posed by the smokes. Present knowledge of the mechanistics of experimental tobacco carcinogenesis is not yet capable of focusing on "the" individual chemical components of importance. There exists a need for "blind assays" --methodologies which will visualize the maximum number of sample components regardless of their chemical type. Such assays would act as a screening test -- alerting experimenters to unexpected gross changes in test smokes -- while providing information as to the importance of the major components of the tested smoke or smoke fraction.

It is possible to perform simultaneous multi-component organic analysis by the careful application of various forms of chromatography. The chromatograms serve as profiles of the components of the assayed samples. "Component profiling" or the "blind assay" has been a continuing interest of this group. In view of its necessarily low priority in the present activity, experimental work has been carried out by student research participants and only to survey its potential utility.

Figure 4-11 demonstrates the type of result sought. Such chromatograms differ from those produced strictly for analytical purposes in that sample preparation procedures mimic those employed for bioassay rather than analysis. The chromatographic peaks thus correspond to one or more components of the bioassayed subfraction. Emphasis is placed on the empirical application of the technique to determine the relative differences between samples. Extensive efforts to identify each peak with its compound(s) and to achieve precise quantitative results are reserved for those components found to vary in target samples.

Only particulate matter and whole condensate profiling have been considered in any detail. Particulate matter is extracted with 4:1 ether: pyridine, the extract is concentrated, reacted with a silylating agent and chromatographed. Whole condensate is simply contacted with pyridine and a silylating agent, allowed to react, and chromatographed. The chromatograms provide a measure of the composition of the matrix in which the active components exert their effect(s). Although convenient to allow the reaction to proceed overnight, such profiles can be generated in as little as two hours.

Particulate matter profiles were generated for a number of commercial cigarettes. Co-chromatography and combined gas chromatography - mass spectrometry provided identifications of peaks corresponding to phenol, hydroquinone, xylenols, propylene glycol, and glycerol. Nicotine is easily visualized as is menthol in menthol cigarettes. Other peaks have been tentatively identified.

Significant among the conclusions reached to date is that the quantitative aspects of the chromatography are more limiting than the sample preparation procedure. With added care, then, absolute quantitative

determinations are possible. Used as a relative tool, the profiles easily detect 25% differences with little to no special precautions. Also significant, particulate matter profiles are very similar to condensate profiles. Finally, the qualitative aspects of the chromatography - retention and resolution - are excellently reproducible.

Visual studies of the particulate matter profiles revealed that the overall compositions of the particulates from the commercial cigarettes were much more alike than different. Profiles from filter cigarettes contained a relative distribution of peaks often undistinguishable from non-filter cigarettes. With the exception of one charcoal filter cigarette, removing the filter produced particulates of essentially unchanged composition. One commercial cigarette noted for its extremely low tar-nicotine delivery was found to produce an exceptionally large relative delivery of humectants. The 1A1 Kentucky cigarette, low in nicotine delivery but higher than anticipated in "toxicity" (7), produced a profile with one peak, possibly corresponding to hydroquinone, substantially larger than normal. Two cigarettes were found to produce profiles with at least one major "new peak" of unknown identity. Minor differences between the profiles were commonly observed. Particulate matter from a cigarette sized, filter tipped cigar produced, as might be expected, a very different profile.

5.00 MARIJUANA SMOKES

Shipments of marijuana cigarettes and condensate preparations were received on June 7, 1971 and July 1, 1971, respectively. Since the contract interest is to achieve a close comparison of the marijuana smoke with the smokes of the experimental cigarettes, analyses for record of the marijuana will not begin until the next analysis of the full series of experimental cigarettes is initiated. Several analyses have been carried out to obtain preliminary measures of selected components and thus minimize the later necessity of repeated analyses due to insufficient sample sizes. The results of those analyses, as well as of selected analyses of the condensates, are summarized in table 5-1.

It must be emphasized that the data presented for marijuana smoke samples was generated using the same procedure as is used for the analyses of tobacco smokes. Should the marijuana smoke contain compounds which contribute to the final measurement, the presented results will be in error by that contribution. Confidence in the presented results can be assessed as the levels of the possibly interfering compounds are determined.

A study of the inorganic compounds delivered by the marijuana cigarettes has been initiated through the neutron activation analysis group of this Laboratory Division. Primary initial interest is in producing a profile of the inorganic delivery relative to a tobacco cigarette. This and other studies of the inorganic and organic composition of marijuana smoke are carried out as time permits.

6.00 SMOKE INHALATION METHODOLOGY PROJECT

Inhalation exposure experiments designed to evaluate the carcinogenicity of cigarette smokes using laboratory rodents have generally been unsuccessful. A popular explanation for this failure is that the extensively developed nasal turbinates act as highly efficient particulate traps. The quantity of smoke reaching the lungs is, thus, below that necessary for tumor development in the lifetime of the rodent. A recent report by Dontenwill et al (12) finds that less than 50% of the particulates are trapped in the nasal turbinates of hamsters during passive smoking. The authors suggest that the total dose of smoke reaching the lungs may be too small to produce the sought end point in spite of the fact that the majority of the smoke reaching the respiratory tract reaches the lungs.

A collaborative Biology Division - Analytical Chemistry Division effort to evaluate the utility of an intratracheal cannula for increasing lung deposition was initiated on approximately 4/1/71. The assessment of the utility of such devices must weigh the anticipated increased deposition against the difficulties associated with the use of the devices and the possible physiological effects of the device alone. This judgment is reserved for the Biology Division team. Only those activities which are the responsibility of the chemical team are discussed here.

First priority was given to supplying the collaborators with a smoking device suitable for preliminary experimentation. A device was designed and fabricated for temporary use while a "Hamburg II" smoking machine was requisitioned. The fabrication time was also utilized to make progress toward a suitable exposure container for cannulated hamsters. This activity is summarized in section 6.01. The second major activity to date has concerned the development of methodologies for determining the quantity of smoke reaching the lungs of exposed animals. The work reported by Dontenwill (12) with carbon-14 hexadecane and the observations by Carpenter (9) of the fate of carbon-14 dotricontane added to cigarettes form the basis of our efforts. In-house studies of neutron irradiated cigarettes for lung deposition measurements proceed as time permits. This activity is summarized in section 6.02.

Anticipated additional responsibilities range from research to providing routine services. Cigarettes must be selected, chemically characterized, and provided to the bioassay personnel. Operational, maintenance, and fabrication services and consultation must be provided. Methodologies and instrumentation must be developed for characterizing the inhalation chamber environment. Individual components, nicotine for example, must be quantitatively measured in target organs. The design and fabrication of new models of the intratracheal device is expected to be a continuing effort. These activities will be initiated if the results of the preliminary studies suggest that cannulation warrants an extensive study.

6.01 Smoke Generation and Animal Exposure

Two distinctly different types of exposure are in use in established inhalation facilities (12, 20, 27). The first, as exemplified by the commercially available "Hamburg II", exposes the animals to a continuous stream of smoke. In the second type, a puff of smoke is directed into the inhalation chamber, allowed to stand for a selected period (often, twenty sec.), and the smoke is replaced with fresh air. The sequence is repeated until the cigarette is consumed.

Largely because of its greater simplicity, a machine of the second type was chosen for initial fabrication.

A brief review of the literature and informal visits with experienced inhalation research groups helped define parameters critical to a useful exposure device. These parameters served as a guide in the design and fabrication of the interim device and in establishing experimental protocols for the preliminary work. These specifications for the experimental system include:

1. The smoke offered to the animals must be produced by the intermittent puffing of individual cigarettes to a standard, preferably 23 mm, butt length.

   Each cigarette must be puffed once per minute. The puff must be of 35 ± 0.5 ml volume and 2 ± 0.2 sec. duration.

2. When a strict comparison with on-going chemical testing is required, cigarettes must be properly conditioned before smoking.

   Conditioning involves exposing the cigarettes to air maintained at 75 ± 2°F and 60 ± 2% relative humidity until the weights of the

cigarettes are constant. Smoking the cigarettes under the same environmental conditions is advantageous.

3. Cigarettes should be held horizontally during smoking.

Cigarettes have been smoked in the vertical position with claims that no substantial differences exist between the smokes generated and that generated by horizontally held cigarettes. Further experimental data is required to resolve this conflict.

4. Cigarettes should be smoked by drawing rather than forcing air through the cigarette.

Positive puff or "reverse" smoking machines are in common use with apparent success. Further data is required to determine the disadvantages, if any, of positive puff techniques.

5. Smoke must be as fresh as possible when it reaches the inhalation chamber and during the exposure cycle.

This would appear to be a serious short coming of the machines which provide fifteen to thirty seconds of static smoke for exposure. Continuous smokers, on the other hand, provide a smoke stream of constant age for exposure but generally devote the first several seconds of age to mixing, dilution, or transport external to the exposure chamber.

6. A means must be provided to vary and control precisely the dilution of the smoke offered to the animals.

7. A means must be provided to periodically purge the exposure chamber of smoke and provide the animals with fresh air.

A fresh air cycle should help reduce blood carboxyhemoglobin levels in the animals and reduce the effective toxicity of the smokes. Care must be exercised, particularly with static exposure devices, to guarantee that smoke fills the chamber long enough to make it impossible for the animal to hold its breath until fresh air is admitted.

8. The geometry of the exposure chamber must permit rapid and uniform mixing and distribution of the smoke-air mixture.

The composition of the mixture must remain uniform throughout the chamber for the duration of the smoke inhalation cycle.

9. Animals must be positioned at preselected points on the exposure chamber to insure a known and constant distance between the animals face and smoke inlet.

   Where it is not possible to locate the animals equidistant from the smoke inlet, exposure positions for each animal must be varied to allow each an equal number of exposures at each distance from the inlet.

10. Animals must be enclosed to prevent unnecessary contact of their fur and skin with the smoke.

11. Unnecessary traumatic conditions must be eliminated.

    Sudden agitation or loud noises constitute unnecessary traumatic conditions. The periodic activation of a solenoid valve or other noisy component may alert the animals to an ensuing puff of smoke and condition their reactions. Severe trauma, itself, may have a physiological effect. As all trauma cannot be removed, sham-smoked animals should be included in long term experiments.

12. The smoking system should allow the use of Cambridge Filters.

    It may be necessary to test the gas phase of cigarettes smoke. It will often be necessary to trap exhausted smoke for measurements of the total smoke offered to the animals.

13. The exposure chamber should include an appropriate sampling port to allow grab sampling and interfacing with appropriate analytical instruments.

No attempt was made to develop a system which met all of the enumerated requirements. Expediting the delivery of a reasonably standard device was the primary concern. Although, perhaps, totally unlike the exposure system visualized for eventual extensive use, the interim machine is easily adequate to address the preliminary problems of this study.

1. Interim smoke generation-exposure machine.

The interim machine (figures 6-1, 6-2, 6-3) consists, basically, of a Walton-type valve, inhalation chamber similar in configuration to that developed at Mason Research Institute (27), and a modified Filamatic pump. The operating sequence is controlled by a 1-rpm repeat cycle timer. The inlet valve opens to connect the cigarette to the inhalation chamber. A two second, 35 cc puff is drawn into the chanber by the pump, the inlet

valve is closed, and the smoke is allowed to stand for, typically, 20 seconds. The chamber is then flushed with fresh air for approximately 30 seconds, the air flow is stopped, and several seconds later the inlet valve opens in preparation for the next puff. The sequence is repeated until a 23 mm butt remains.

The dimensions of the chamber were selected to produce an internal volume of ca 350 cc. Each puff of smoke is thus diluted 9:1 by air. Side plate spacers have been fabricated to double the chamber volume and produce 5% smoke environments. Chamber environments greater than 10% in smoke would require an internal spacer or the simultaneous smoking of more than one cigarette.

Visual observations suggest that the puff of smoke is immediately and uniformly distributed throughout the chamber. Little to no settling can be detected visually in the 15-20 second stand time. The system is quiet and agitation free. Judging from the number of puffs required to smoke the cigarettes and the particulate activity detected in the smoke, the standard smoking parameters are very closely approximated.

Drawing air from the relatively large chamber volume most likely produces a poor puff profile. This would be expected to be more severe for larger dilutions. Pressure differentials of several inches of water are observed both during the puff and the exhaust cycles. Providing a continuum of dilutions is difficult with this system. The collaborators report that the animals often hold their breaths for considerable periods; this suggests that the stand times required may result in considerable settling of the smoke and a loss of uniform distribution.

2. Hamster Containment.

Containing cannulated hamsters poses new problems. The animals must be positioned and restrained with greater care. Drastic movements of the head or neck might result in internal injury by the cannula. Forcing a cannulated animal into a cone might also produce injury. As any unnecessary handling of the cannulated animal is to be avoided, the collaborators are interested in a container which might allow cannulation after containment. In order to monitor the animals breathing pattern, the chamber must be sealed from both the room and pressure fluctuations in the exposure chamber.

The presently employed container is diagrammed in figure 6-4. Head restraint is achieved by placing a rigid collar about the animals neck and a rigid nose cone about his head. The nose cone and collar slip into the end of a large Plexiglass tube where they are held by o-rings. The o-ring of the nose cone seals it to the body tube at the head end. Complete containment is accomplished by making an airtight soft seal around the face and closing the opposite end of the body tube with a rubber stopper. The closed container is inserted into a port in the smoke chamber where it is held and sealed by an o-ring around the nose cone. Ten such containers are mounted on the inhalation chamber.

Although considerable improvement is necessary, the present container concept has certain strong advantages. The removable nose cone makes it possible to cannulate in place. The reversible collar design allows the same container to be used for both cannulated and nose breathing animals. Either the nose or the tip of the cannula can be made to extend just into the exposure chamber. The collar-nose cone configuration allows very little head movement.

The container is modified as the collaborators and this group discover shortcomings with its use.

6.02 Measurement of Lung Deposition

Perhaps the single most important experiment in evaluating the potential utility of the nose-bypass device is that of determining the effect of the device on lung deposition. Methodologies are being formulated and tested for the preparation of radiolabelled cigarette smokes and the recovery of the label from the head, trachea, and lungs of the exposed animals.

The production of radiolabelled smokes in a reproducible and meaningful manner is a complicated task. The label must reside totally in the particulate phase for studies of carcinogenesis. When it is necessary to determine the localized deposition of the particulates rather than total uptake, the label must be in such a form as to remain immobile at the point of contact. The labeling technique must be applicable under conditions identical to those used in experimental smoking. The label produced must reside througout the particle size range and not be localized to a single or small range of particle sizes.

Substantial progress has been made (12) using carbon-14 labelled n-alkanes. In one case (12), the labeling compound is deposited by syringe in the butt end of the cigarette. The total activity found in the particulates is small and apparently highly influenced by the precise length of the butt. An alternate technique (9) involves coating the filler tobacco before making the cigarette. The coating technique would appear to be preferable as the labeled compound is contacted by the fire cone as are the normally produced particulates and a greater amount of activity should be transferred to the particulate matter. Considerable skill is required, however, to uniformly distribute the label and prepare small batchs of uniform cigarettes. The fact that the labeled compound contacts the fire cone increases the probability that some label will reside in the gas phase.

With either technique, it is not yet known whether the use of a given chemical compound results in the label residing in a select range of particle sizes rather than throughout the full spectrum of sizes. Using carbon-14, one is confronted with the problem of measuring a species of low activity.

These problems have been addressed in a preliminary manner. A highly fluorescent compound was deposited from solution into a cigarette using a syringe and onto filler tobacco by soaking the tobacco and evaporating the solvent. Visual observation of the product tobaccos revealed a very poor distribution of the solute when deposited by syringe. Single strands of tobacco were heavily coated while most were completely free of fluorescence. A significant amount of the compound was found as a patch on the paper. Deposition from solution by soaking and evaporation produced a very uniform coating.

Six commercial cigarettes were stripped of the paper and the tobaccos soaked in 14-C-dotricontane in n-hexane. Carefully weighed quantities of the dried product were made into cigarettes using the "Laredo" cigarette maker. Three of these were extracted directly and counted to determine the predictability and reproducibility of the technique. The remaining cigarettes were smoked and the particulate matter was trapped on Cambridge filters. The particulate matter, ash, and butt were extracted and counted. No means was available at the time for examining the gas phase.

The reproducibility of the technique was reasonably good. The cigarettes not smoked were found to contain 2.76×10^5, 3.13×10^5, and 3.37×10^5 cts/min respectively. The cigarettes smoked produced total (particulate matter, ash, butt) activities of 2.64×10^5, 2.69×10^5, and 3.16×10^5 cts/min with 33.8, 39.0, and 36.7 % of the activity of each respectively, in the particulate matter. Essentially all of the remaining detected activity was found in the butt. Approximately 87% of the activity originally present was recovered with the balance possibly distributed between the sidestream smoke and gas phases.

Studies of the butt end deposition and filler deposition of carbon-14-hexadecane, and the filler deposition of carbon-14-dotricontane are now in progress. Primary questions concern the predictability and reproducibility of the technique, the quantity of label residing in the gas phase, the distribution and recovery of the label, and the delivery as a function of puff number. The particle size distribution of the label will be considered if practical.

Carbon-14-dotricontane has been utilized to verify the analytical procedures. Toluene extractions prove effective for recovering the label from tobacco and particulate matter. Alcoholic potassium hydroxide digestions followed by petroleum ether extractions recover more than 80% of the label from the heads of hamsters and 95-100% from the lungs. A comparable consideration of carbon-14-hexadecane is planned.

A possible alternative labeling technique might involve the addition of highly characterized radioactive particles to the smoke in the chamber. More active particles could be used to make quantitative counting convenient. The particle size characteristics could be carefully controlled. A very definite disadvantage of such an approach is that the physical and chemical properties of the label would be totally unlike that of the smoke particles.

The use of radioactivity induced in a cigarette by neutron irradiation offers substantial promise. The resulting label is uniformly distributed throughout the cigarette and is exposed to the fire cone precisely as is the cigarette. Both the paper and tobacco are uniformly labeled without exposure to solvents or unrealistic quantities of foreign chemicals.

Preliminary results at this laboratory suggest that sufficient activity can be delivered by one cigarette to make quantitative counting practical. Whole body counting may be possible. Activity has been detected which is specific to the particulate phase of smoke. Other activity is found both in the particulate and gas phases of smoke thus suggesting the possibility that depositions from both phases can be measured. The technique suffers from the fact that the labeled species are inorganic and expected to rapidly disperse throughout the animals system. The reproducibility and quantitative nature of the technique remain to be determined. It must also be shown that irradiation does not significantly change the characteristics of the smoke and that the label resides uniformly over the required particle size range.

Cigarettes might also be labeled with non-radioactive species. Compounds might be selected which are easily detected by high sensitivity analytical techniques. Fluorescent compounds or multi-halogenated electron capturing compounds might easily be quantitated. Those problems associated with the production of radioactive labels also exist in the production of chemically labeled smokes. The costs and hazards associated with radiation work would be avoided. The ability to measure a specified compound could eliminate interferences from gas phase deposition. The analytical methodology required would be expected to be more complicated than for the measurement of radioactivity.

7.00 REFERENCES

1. Allman, D. R. , Williamson, J. T., and Castagna, G. C., A Combined Rotary and Piston Smoking Machine for Vapour Phase Analysis, presented at the 24th Tobacco Chemists Research Conference, Montreal, Canada, October 28-30, 1970.

2. Applied Science Laboratories, Inc., Catalog No. 14, The Anspec. Co., Inc., Ann Arbor, Michigan, 1971.

3. Ayres, C. I., and Thornton, R. E., Beitrage zur Tabakforschung, 3, 285 (1965).

4. Bell, J. H., Lorillard Research, Greensboro, North Carolina, Private Communication, December 8, 1970.

5. Bell, J. H., Lorillard Research, Private Correspondence, January 6, 1971.

6. Benedict, R. C., Lakritz, L., Strange, E. D., and Stedman, R. L., Chem. and Ind.,800 (1970).

7. Benner, J. F., Proceedings of the Tobacco and Health Conference, Lexington, Kentucky, February 24, 25, 1970, p. 32.

8. Bowen, C. V., and Barthel, W. F., Industrial and Engineering Chemistry, 15, 740 (1943).

9. Carpenter, R. D., Gager, F. L., Jenkins, R. W., Newman, R. H., The Utility of Carbon-14 for Ascertaining Precursor-Product Relationships in Cigarette Smoke, presented at the 24th Tobacco Chemists Research Conference, Montreal, Canada, Oct. 28-30, 1970.

10. Chakraborty, B. B., Kilburn, K. D., and Thornton, R. E., Chem. and Ind., 672 (1971).

11. Cundiff, R. H., Sensabaugh, A. J., and Markunas, P. C., Tobacco Science, 6, 25 (1962).

12. Dontenwill, Von W., Harke, H.-P., Baars, A., and Goertz, E., Arzneim-Forsch (Drug Res.), 21, 142 (1971).

13. Duncan, R. M., Amer. Ind. Hyg. Assoc. J., pp. 624-629, Nov. - Dec (1969).

14. Guerin, M. R., and Shults, W. D., Tobacco Smoke Analysis Program Progress Report for the Period Jan. 1, 1970 to Sept. 1, 1970, ORNL-4642, Oak Ridge, Tennessee, January 1971.

15. Guerin, M. R., Compilation of Analytical Procedures for the Tobacco Smoke Analysis Program, ORNL, Oak Ridge, Tenn., July 1, 1971.

16. Guerin, M. R., Kubota, H., and Quincy, R. B., Smoke Composition of Experimental Cigarettes Nos. 1-23 - Data Report, July 1, 1971.

17. Gori, G. B., National Cancer Institute, Senkus, M., R. J. Reynolds Research, Private Communication, August, 1970.

18. Hagopian, M., Environmental Science and Technology, 3, 567 (1969).

19. Hoffmann, D., Suggestions for the Routine Analysis of Cigarette Smoke and Smoke Condensate, Informal Submission To Tobacco Working Group, 1969.

20. Homburger, F., Bio-Research Institute, Cambridge, Massachusetts, Private Communication, March, 1970.

21. Lyerly, L. A., R. J. Reynolds Research, Winston Salem, North Carolina, Private Communication, March 6, 1970.

22. Lyerly, L. A., R. J. Reynolds Research, Winston Salem, North Carolina, Private Communication, December 7, 1970.

23. McReynolds, W. O., J. Chromatographic Sci., 8, 685 (1970).

24. Mumpower, R. C. and Kiefer, J. E., Tobacco Science, 11, 144 (1967).

25. Newsome, J. R., Norman, V. and Keith, C. H., Tobacco Sci., 9, 102 (1965).

26. Oakley, E. T., Millham, J. O., and Weissbecker, L., Anal. Chim. Acta, 31, 272 (1964).

27. Rosenkrantz, H. and Mason, M., Mason Research Institute, Worcester, Mass., Private Communication, March, 1970.

28. Saltzman, B. E., Anal. Chem., 26, 1945 (1954).

29. Schultz, F. J. and Spears, A. W., Tobacco Science, 10, 75 (1966).

30. Schultz, F. J. and Bell, J. H., Lorillard Research, Private Correspondence, April 1, 1971.

31. Senkus, M., Markunas, P. C., and Robinson, W. T., R. J. Reynolds Research, Winston Salem, North Carolina, December 7, 1970.

32. Sensabaugh, A. J., and Cundiff, R. H., Tobacco Science, 11, 25 (1967).

33. Sensabaugh, A. J. and Markunas, P. C., R. J. Reynolds Research, Private Communication, Winston Salem, North Carolina, December 7, 1970.

34. Spears, A. W., Lorillard Research, Private Correspondence, March 30, 1971.

35. Wagner, J. R., Lorillard Research, Private Correspondence, May 25, 1971.

36. Wagner, J. R., Lorillard Research, Private Correspondence, July 12, 1971.

37. Wynder, E. L. and Hoffmann, D., Tobacco and Tobacco Smoke - Studies in Experimental Carcinogenesis, Academic Press, New York, New York 1967.

8.00 TABLES AND FIGURES

Table 3-1 Tower versus Bag Samples of CO and CO_2

Table 5-1 Chemical Characteristics of Marijuana Smoke. Code M Cigarettes, Smoke, and Smoke Condensate

TABLE 3-1

Tower versus Bag Samples of CO and CO_2

	Carbon Monoxide		Carbon Dioxide	
	volume percent in container			
Cigarette	Plastic Bag	Tower	Plastic Bag	Tower
1	4.7	4.4	8.4	8.2
2	4.9	5.6	8.7	8.9
3	4.0	4.0	8.1	8.0
4	5.4	5.2	9.3	9.3
5	4.5	4.6	8.9	8.7
6	4.3	4.6	8.6	8.8
7	5.7	5.7	9.0	8.7
8	4.8	5.1	8.6	9.2
9	4.7	5.1	8.1	8.8
10	4.1	3.8	8.0	7.8
11	4.0	3.9	7.6	7.7
12	5.4	4.9	9.6	9.1
13	4.6	4.8	9.2	9.1
14	6.8	6.6	10.1	9.9
15	8.0	8.2	9.5	9.6
16	5.2	5.4	8.9	9.0
17	5.0	5.9	8.1	8.7
18	6.0	6.4	8.4	9.0
19	7.4	7.0	9.4	8.8
20	6.6	6.5	10.3	10.0
21	5.0	5.5	6.8	7.0
22	8.5	9.2	9.3	10.0
23	8.7	9.6	9.7	9.5

TABLE 5-1

Chemical Characteristics of Marijuana Smoke.
Code M Cigarettes, Smoke, and Smoke Condensate

Particulate Matter	
Average Weight (92 cigarettes)	1.0777 gm
minimum weight	0.9110 gm
maximum weight	1.2320 gm
standard deviation	0.0158
relative standard deviation	1.47%
Average RTD (92 cigarettes)	4.0 inches water
Number of puffs to 23 mm (16 cigarettes)	10.4
Total Particulate Matter (16 cigarettes)	29.3 mg/cig, 2.8 mg/puff
Water in Total Particulate Matter	3.3 mg/cig, 0.3 mg/puff
Dry Particulate Matter	26.0 mg/cig, 2.5 mg/puff
Gas Phase	
Carbon Monoxide	3.4 volume %
Carbon Dioxide	7.3 volume %
Hydrogen Cyanide	219 μg/cig 22 μg/puff
Acetaldehyde	~ 0.99 mg
Acrolein	~ 0.10 mg
Smoke Condensate	
Weight percent of submitted condensate suspension:	
Water	1.9%
Acetone	46.6%
Dry Condensate	51.5%
Wet Condensate	53.4%
Quantity per gram of dry condensate:	
Colorimetric Phenols	6.0 mg
Phenol	3.5 mg
o-Cresol	0.7 mg
m-Cresol + p-Cresol	3.3 mg
Phenol + Cresols	7.5 mg
Titrimetric Weak Acids	1.26 meq
Titrimetric Very Weak Acids	1.26 meq
Total Titrimetric Acids	2.52 meq
Phenanthrene	36.3 μg
Benz(a)anthracene	3.96 μg
Benzo(a)pyrene	2.60 μg
pH (aqueous extract, 1% in condensate)	4.60

8.00 TABLES AND FIGURES

FIGURES FOR SECTION 3.00

Figure 3-1 Action of solenoid valves on smoking machine for the determination of CO, CO_2, and oxides of nitrogen.

Figure 3-2 Vacuum sampling manifold for CO and CO_2 in the gas phase of cigarette smoke.

Figure 3-3 Loss of CO and CO_2 as a function of time from the rubber balloon trap.

Figure 3-4 Tower sampling device for the gas phase of cigarette smoke - CO and CO_2 determinations.

Figure 3-5 Loss of CO and CO_2 as a function of time from the tower trap.

Figure 3-6 Smoke generation-trap system for the determination of oxides of nitrogen.

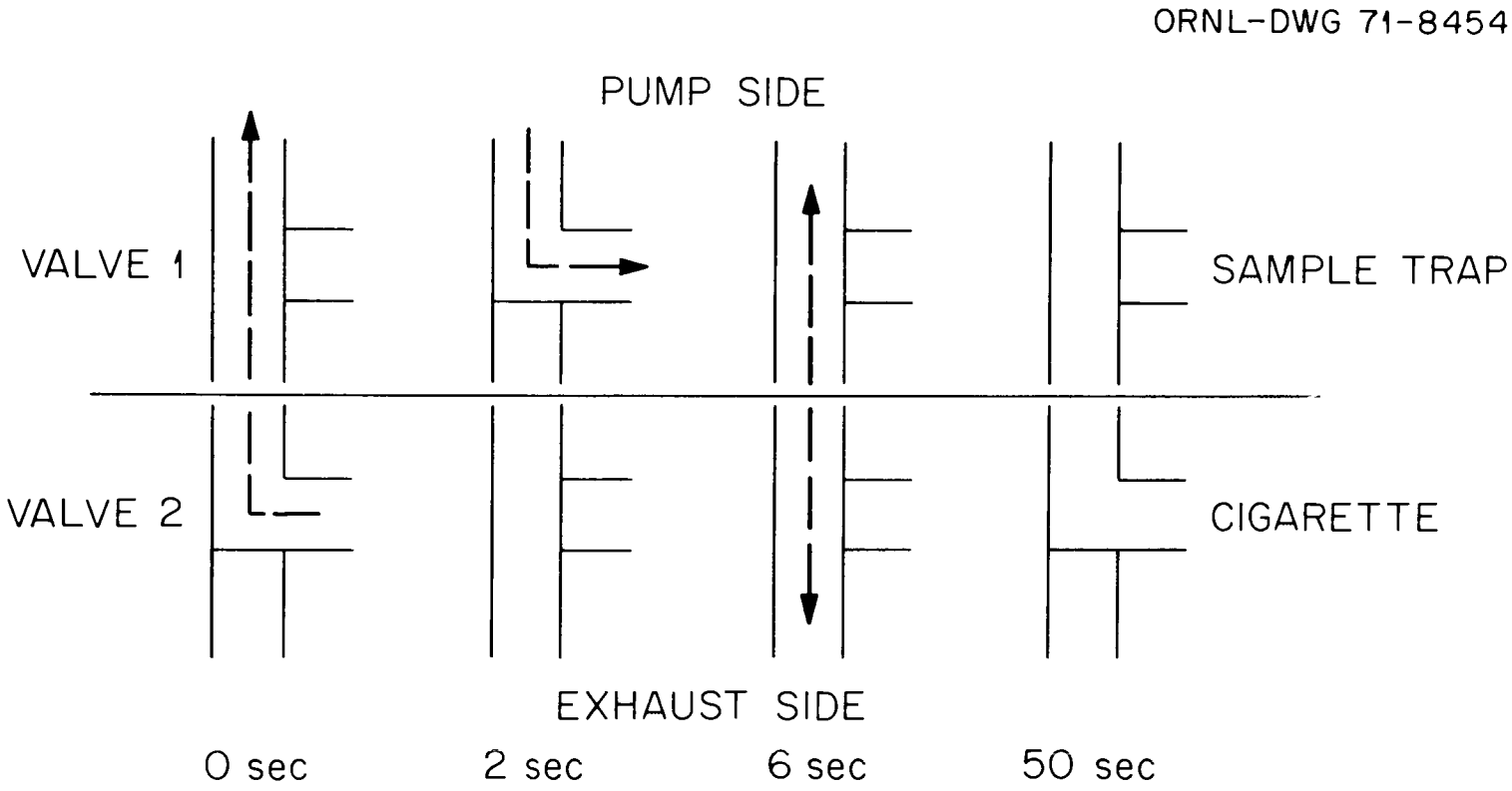

Figure 3-1 Action of solenoid valves on smoking machine for the determination of CO, CO_2, and oxides of nitrogen.

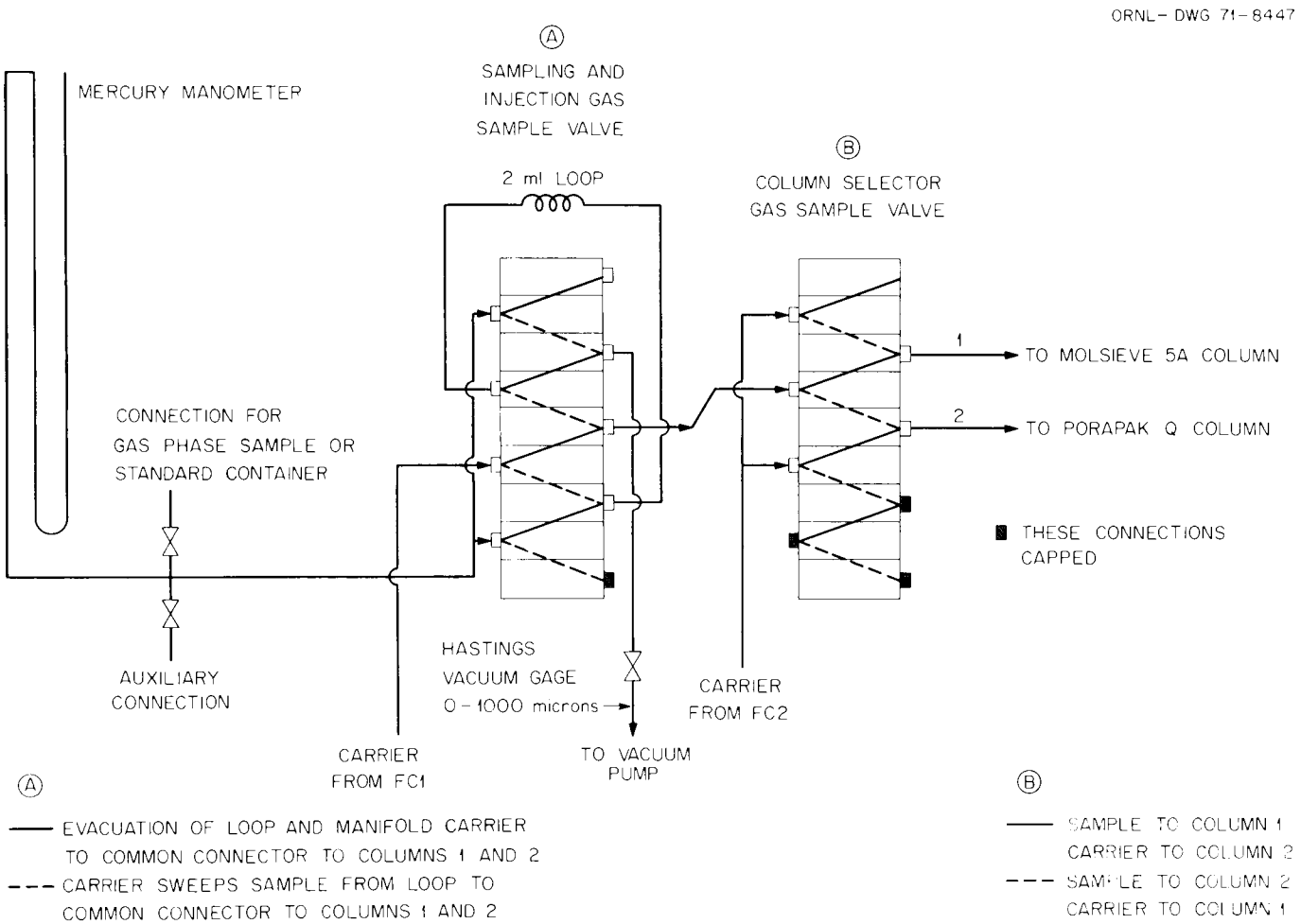

Figure 3-2 Vacuum sampling manifold for CO and CO_2 in the gas phase of cigarette smoke.

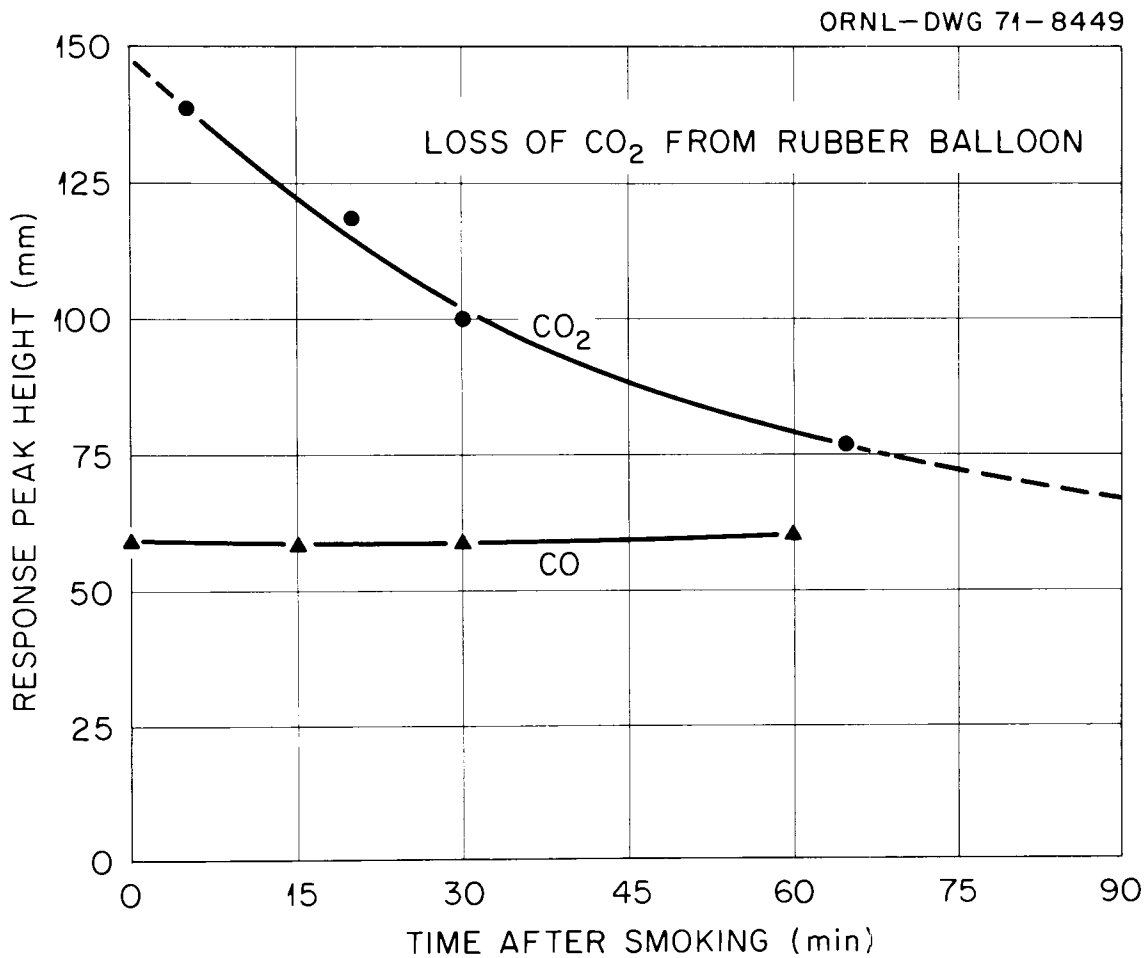

Figure 3-3 Loss of CO and CO_2 as a function of time from the rubber balloon trap.

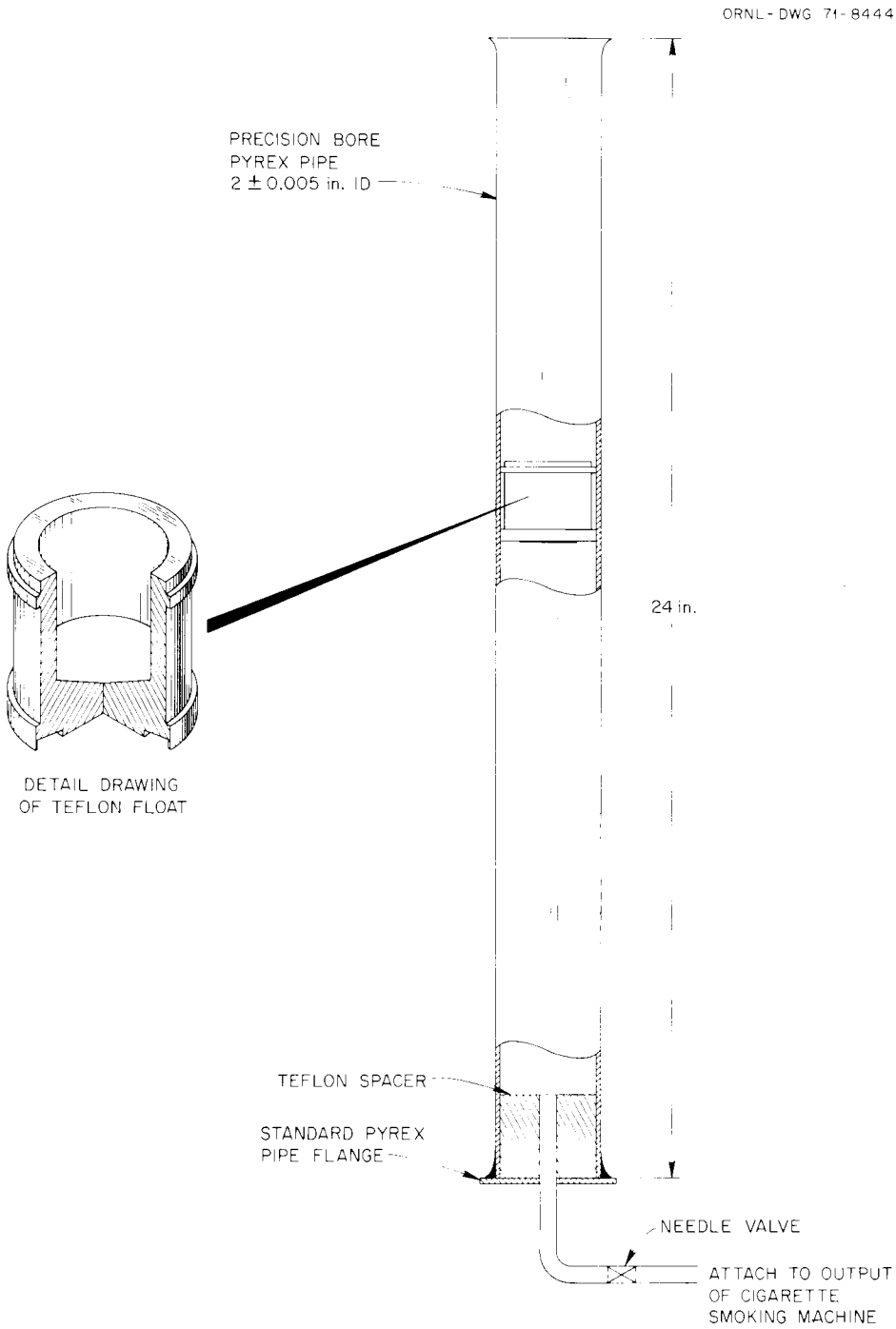

Figure 3-4 Tower sampling device for the gas phase of cigarette smoke - CO and CO_2 determinations.

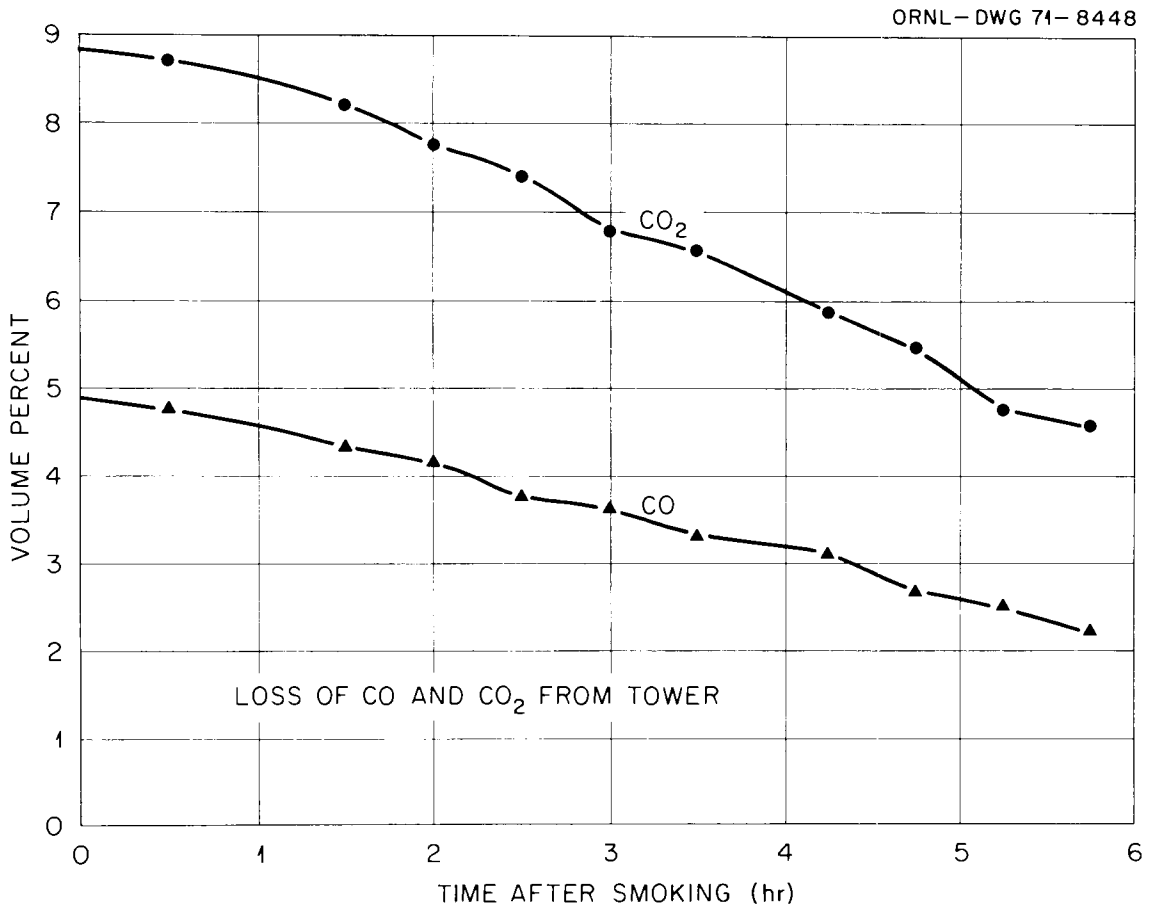

Figure 3-5 Loss of CO and CO_2 as a function of time from the tower trap.

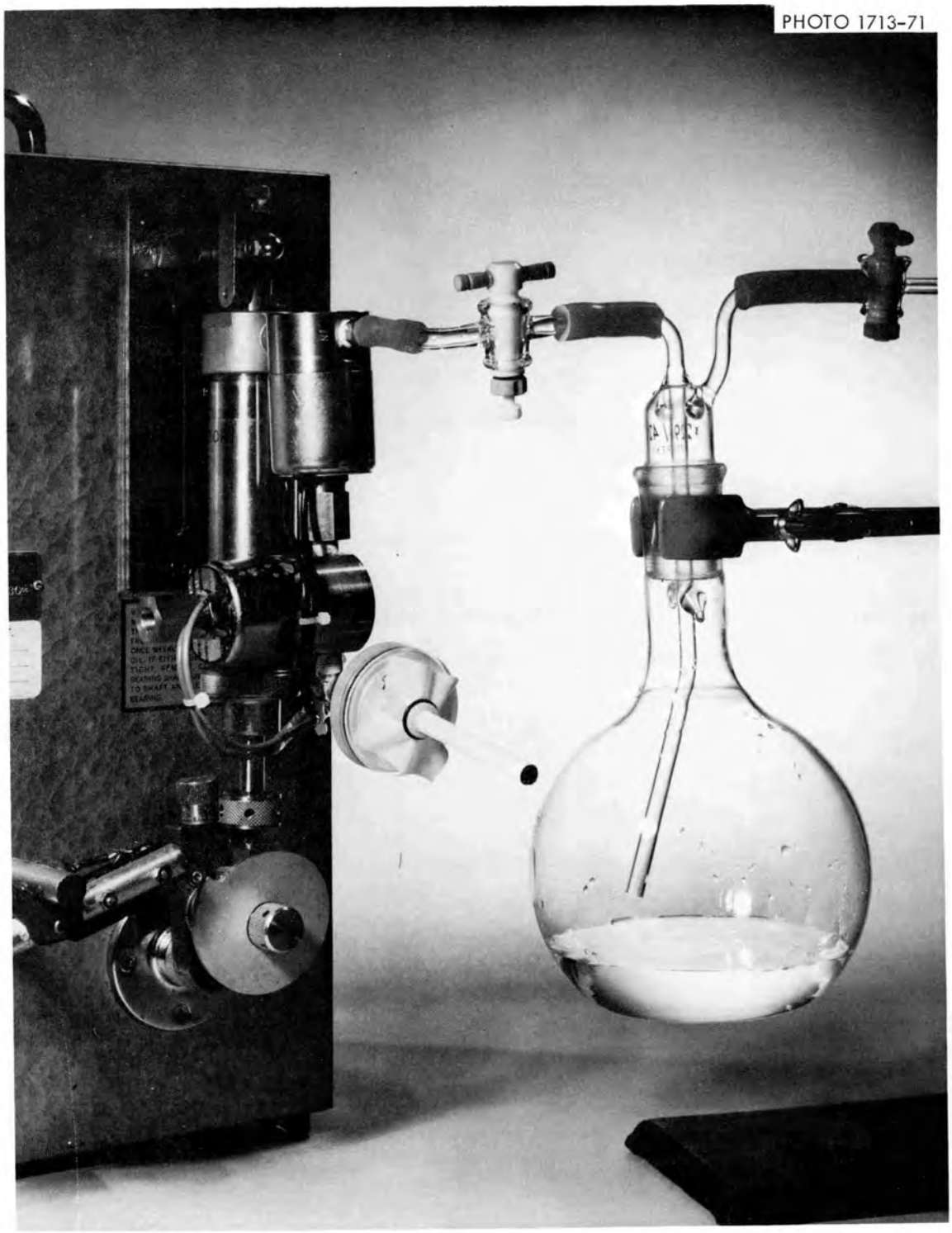

Figure 3-6 Smoke generation-trap system for the determination of oxides of nitrogen.

8.00 TABLES AND FIGURES

FIGURES FOR SECTION 4.00

Figure 4-1 Porapak Q gas chromatographic determination of water and acetone in smoke condensate suspensions.

Figure 4-2 Casterwax gas chromatographic determination of nicotine in smoke condensate.

Figure 4-3 Casterwax gas chromatographic determination of phenol, o-cresol, and m-cresol plus p-cresol in smoke condensate.

Figure 4-4 Schematic summary of the determination of phenanthrene, benz(a)anthracene, and benzo(a)pyrene in smoke condensate.

Figure 4-5 Alumina column chromatographic separations of phenanthrene, benz(a)anthracene, and benzo(a)pyrene.

Figure 4-6 Apiezon W gas chromatographic analysis of the phenanthrene alumina column composite.

Figure 4-7 Apiezon H gas chromatographic analysis of benz(a)anthracene.

Figure 4-8 Apiezon H gas chromatographic analysis of the benz(a)anthracene alumina column composite.

Figure 4-9 OV - 101 gas chromatographic analysis of benzo(a)pyrene.

Figure 4-10 Titration curves for the determination of weak and very weak acids in condensates.

Figure 4-11 Gas chromatographic component profiles of cigarette smoke fractions.

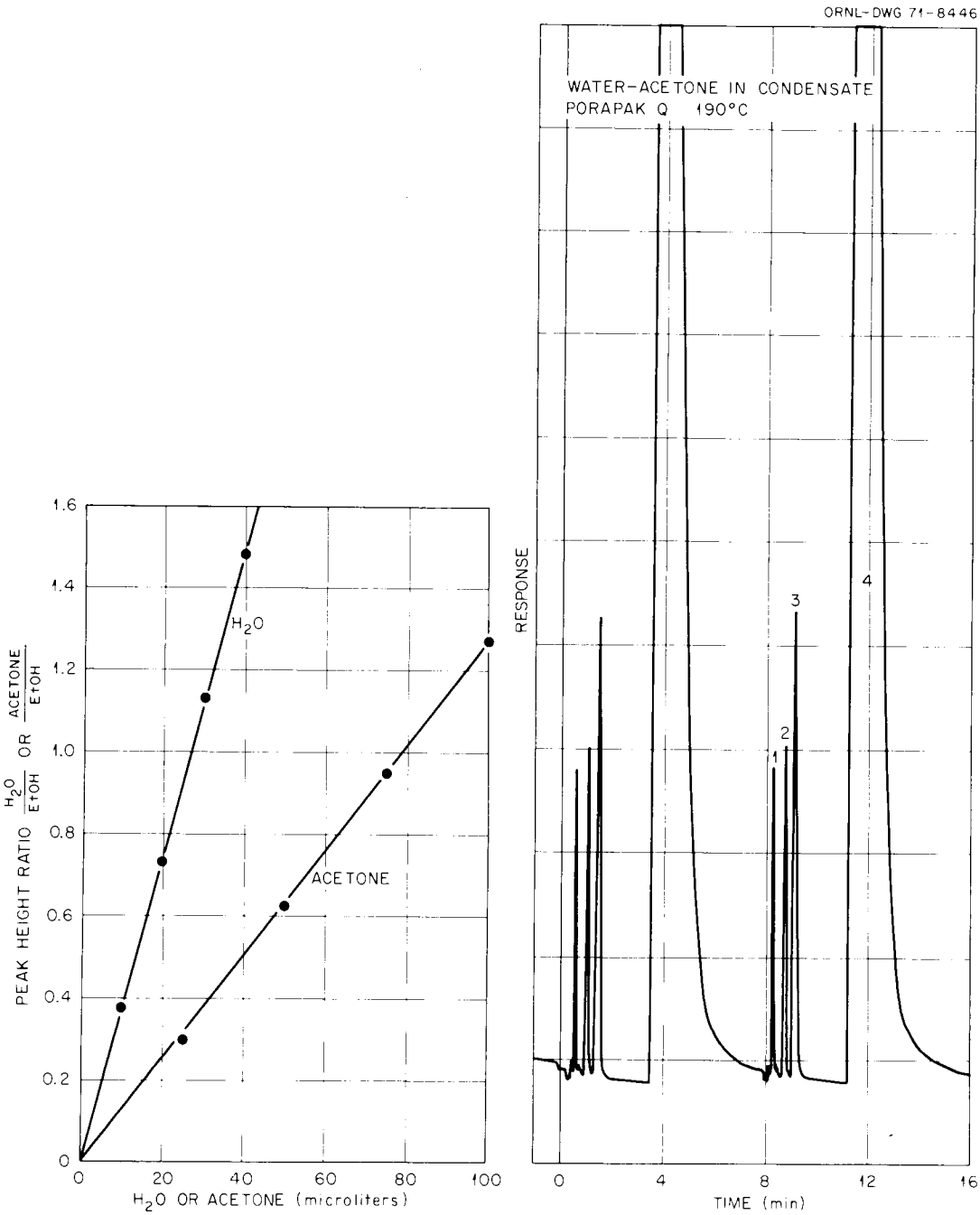

Figure 4-1 Porapak Q gas chromatographic determination of water and acetone in smoke condensate suspensions. 1.Water, 2.Ethanol, 3.Acetone, 4.Dioxane

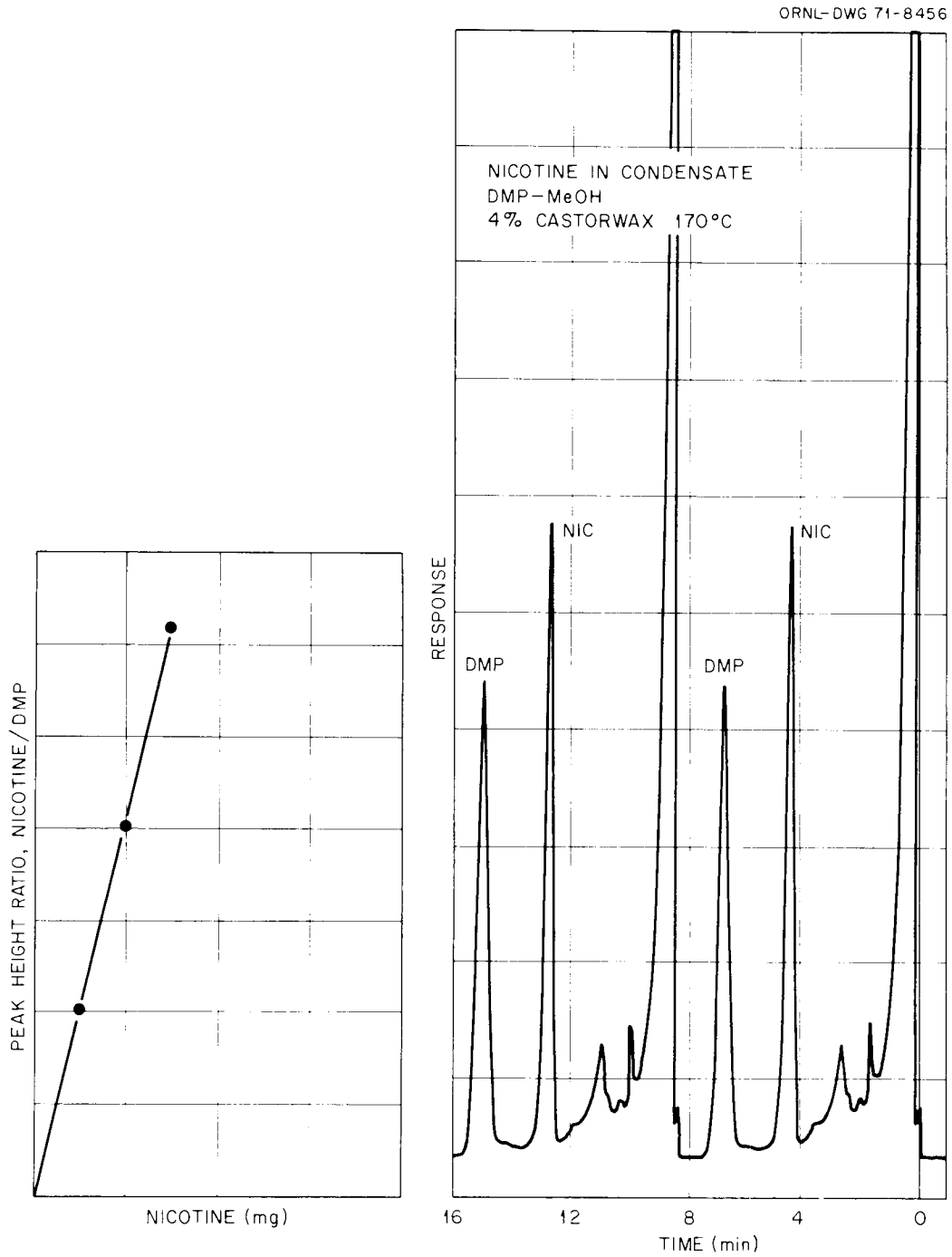

Figure 4-2 Casterwax gas chromatographic determination of nicotine in smoke condensate.

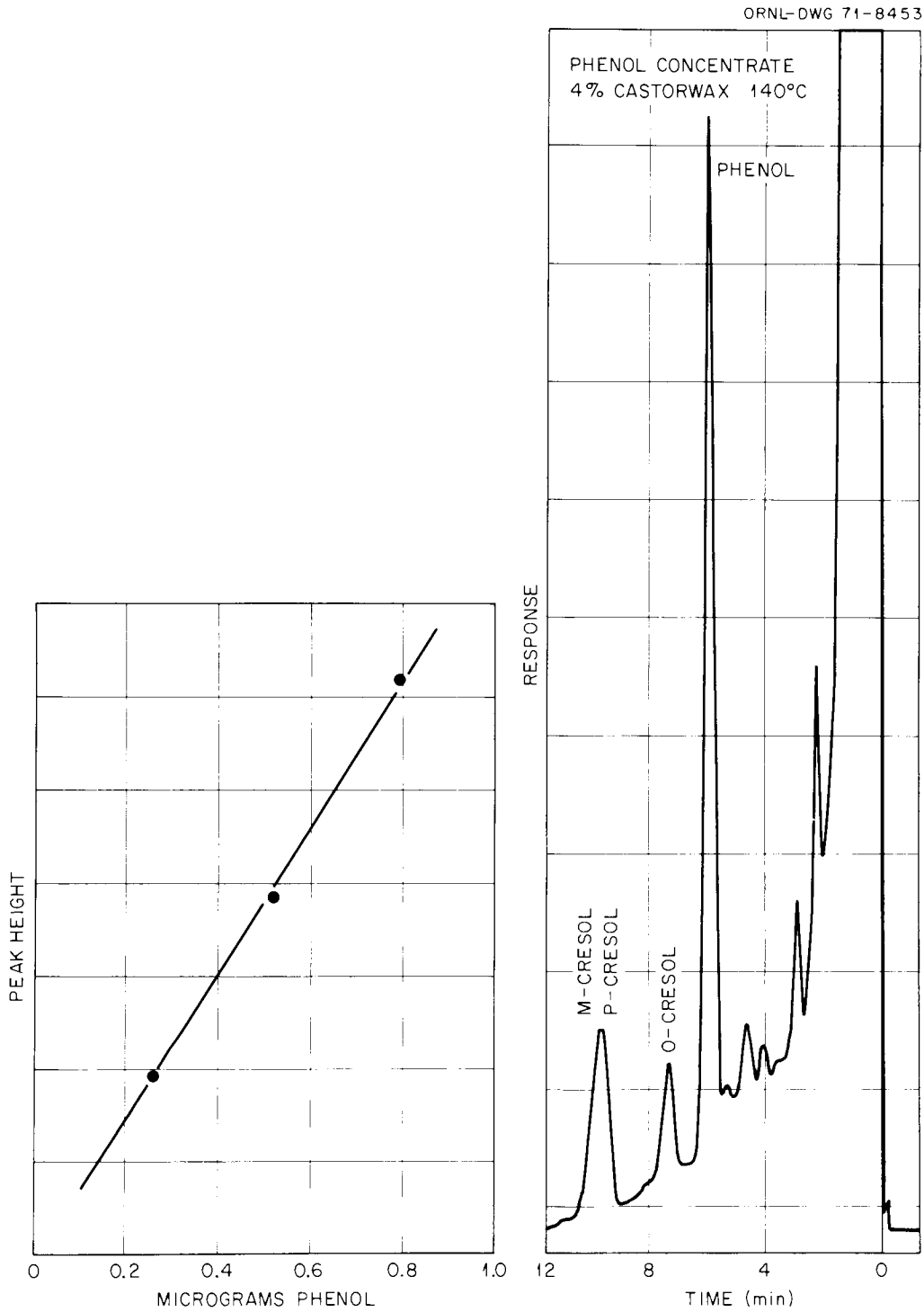

Figure 4-3 Casterwax gas chromatographic determination of phenol, o-cresol, and m-cresol plus p-cresol in smoke condensate.

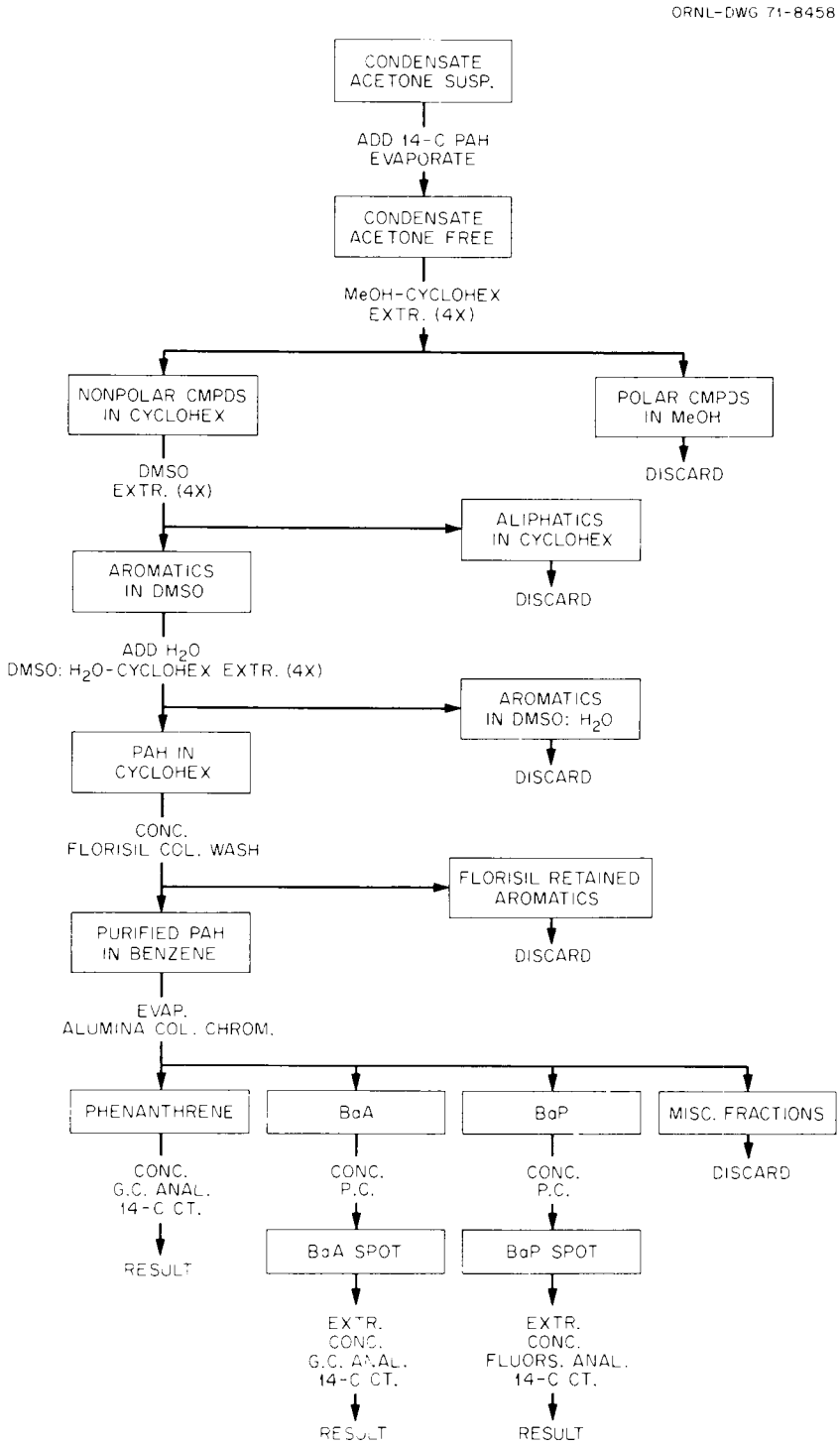

Figure 4-4 Schematic summary of the determination of phenanthrene, benz(a)anthracene, and benzo(a)pyrene in smoke condensate.

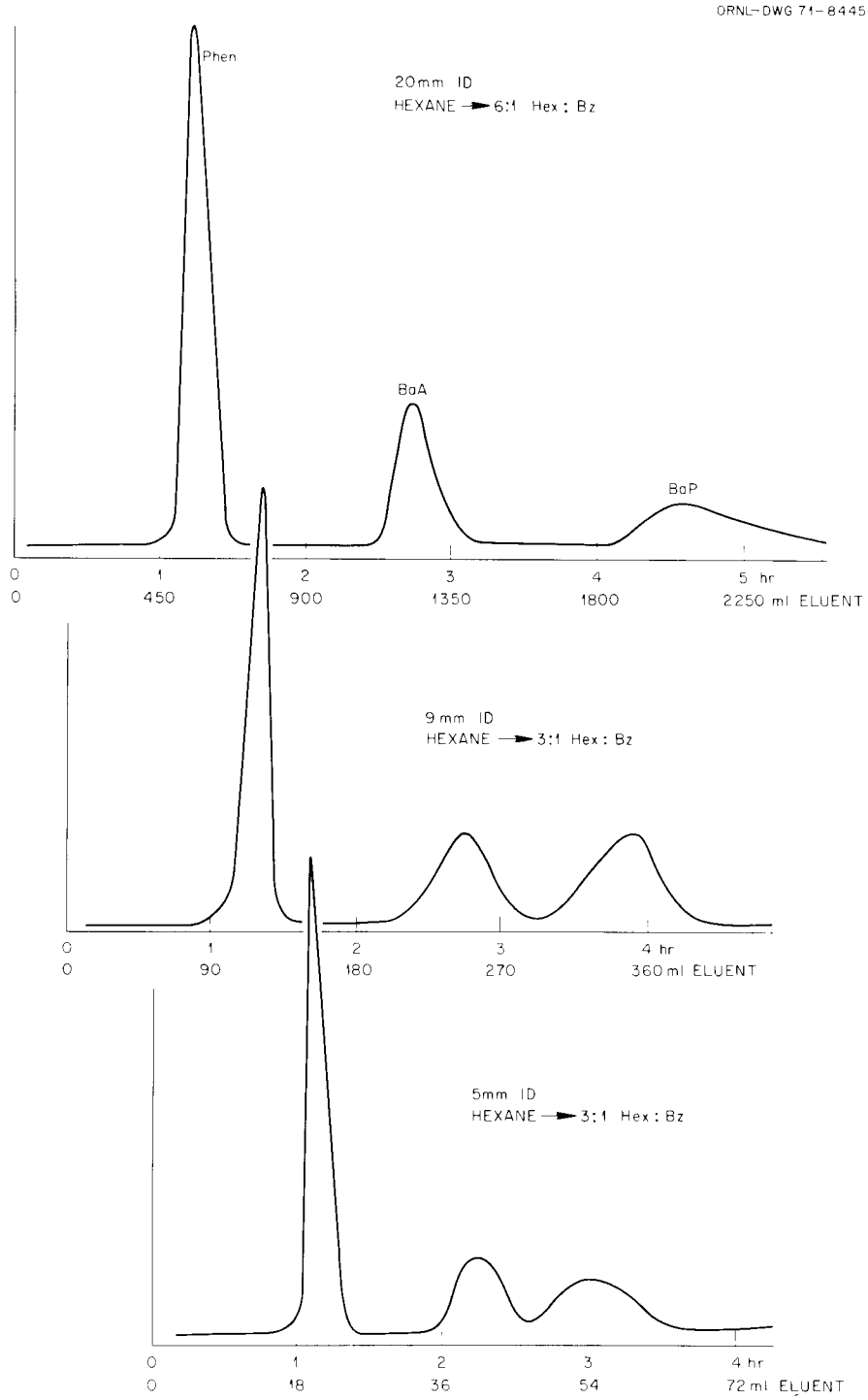

Figure 4-5 Alumina column chromatographic separations of phenanthrene, benz(a)anthracene, and benzo(a)pyrene.

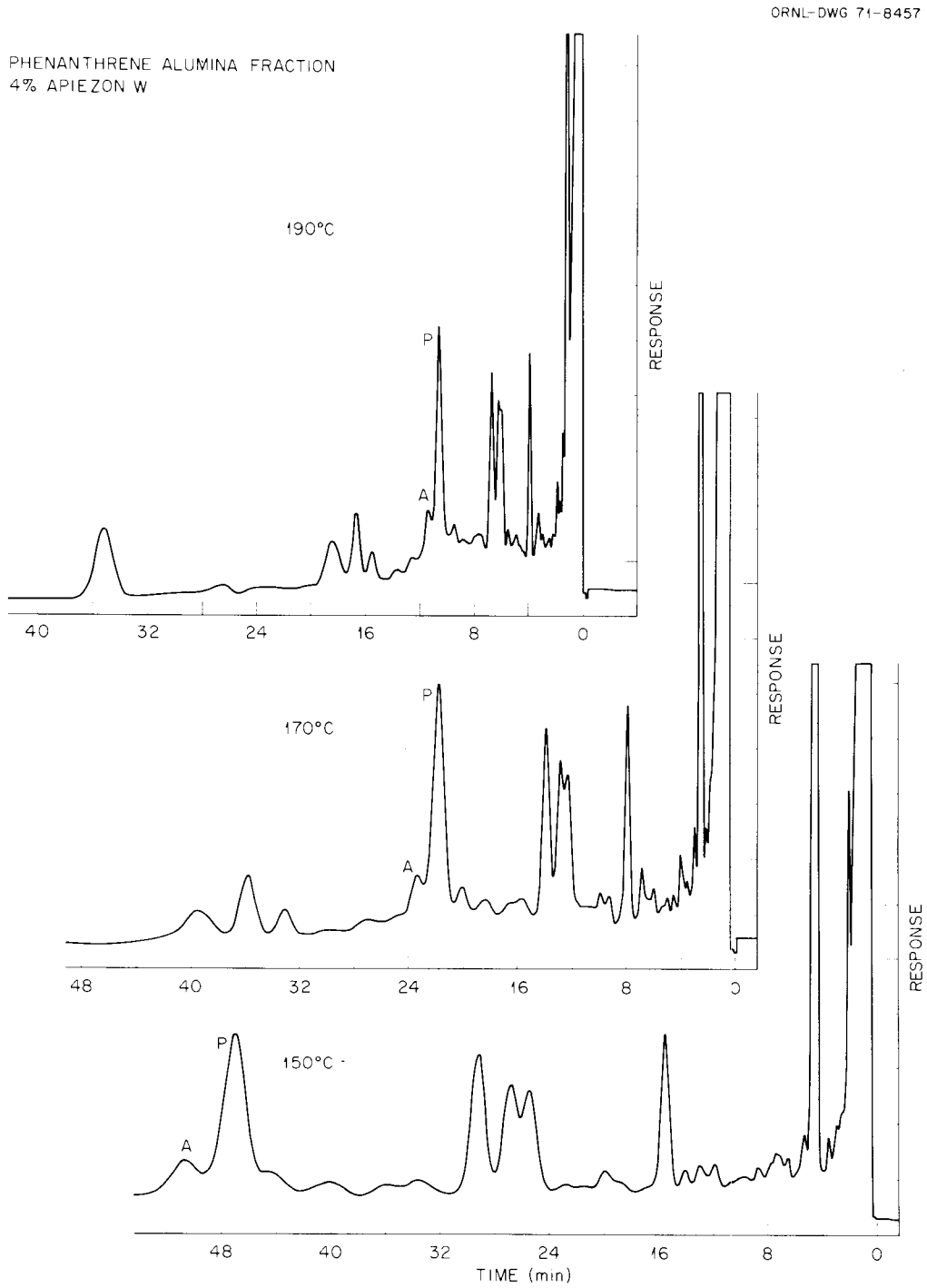

Figure 4-6 Apiezon W gas chromatographic analysis of the phenanthrene alumina column composite.

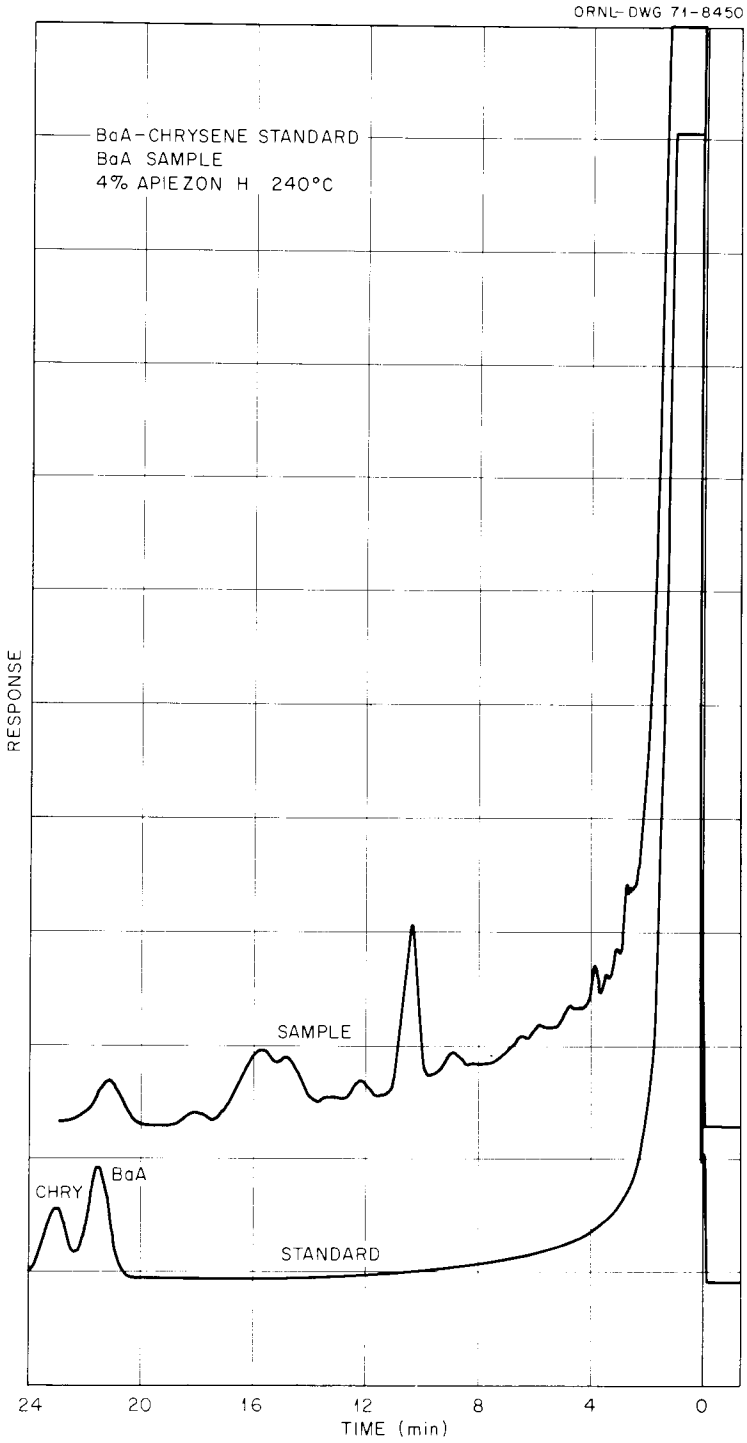

Figure 4-7 Apiezon H gas chromatographic analysis of benz(a)-anthracene.

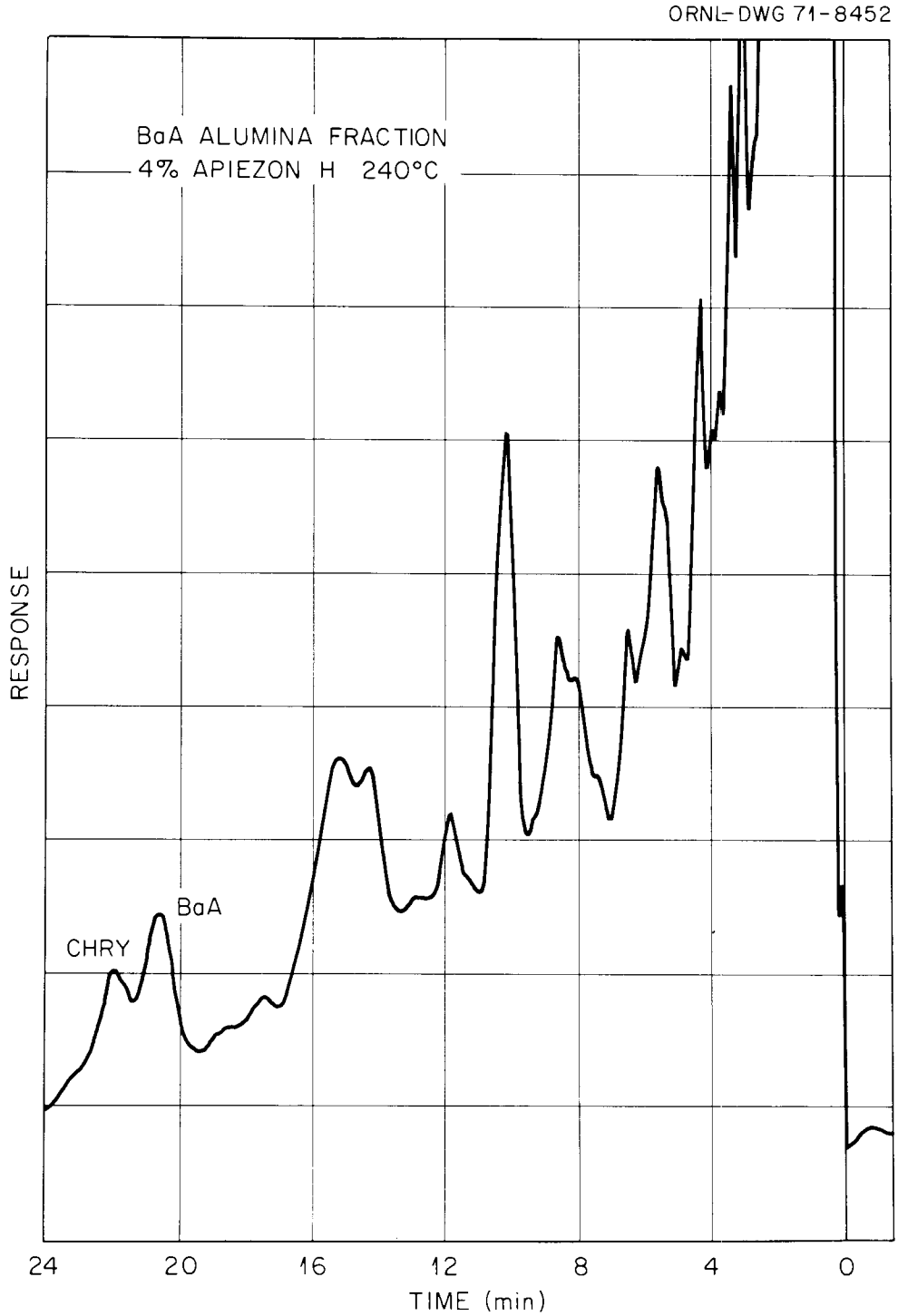

Figure 4-8 Apiezon H gas chromatographic analysis of the benz(a)-anthracene alumina column composite.

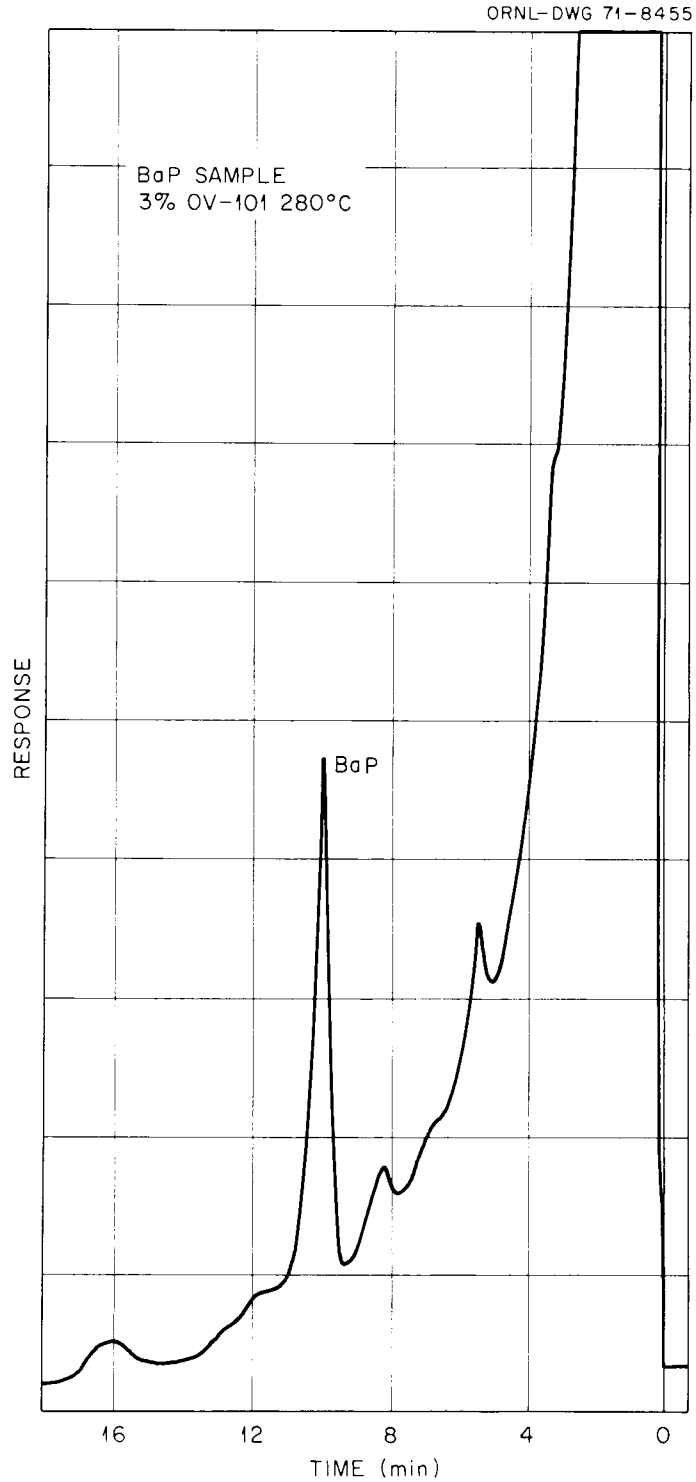

Figure 4-9 OV-101 gas chromatographic analysis of benzo(a)pyrene.

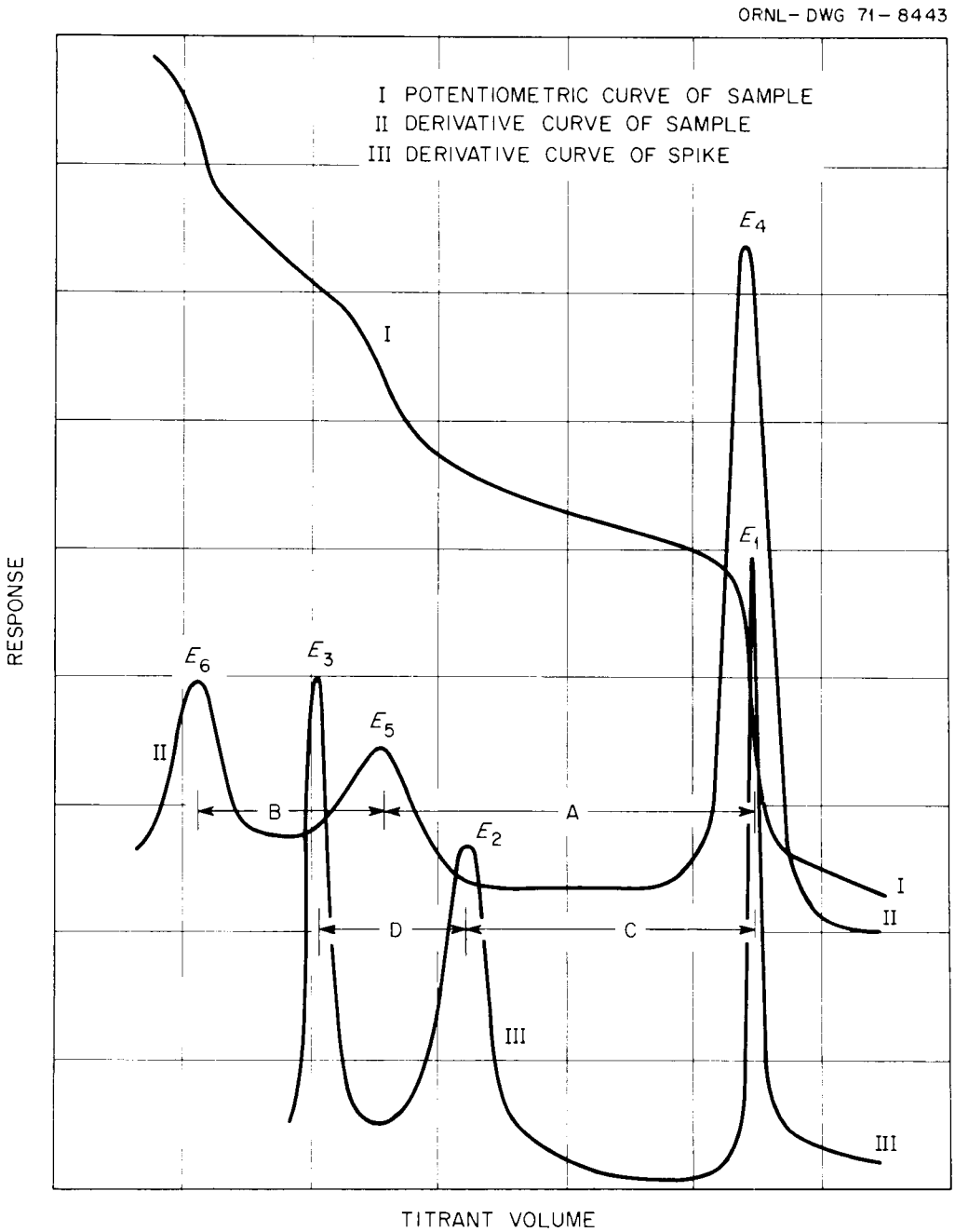

Figure 4-10 Titration curves for the determination of weak and very weak acids in condensates.

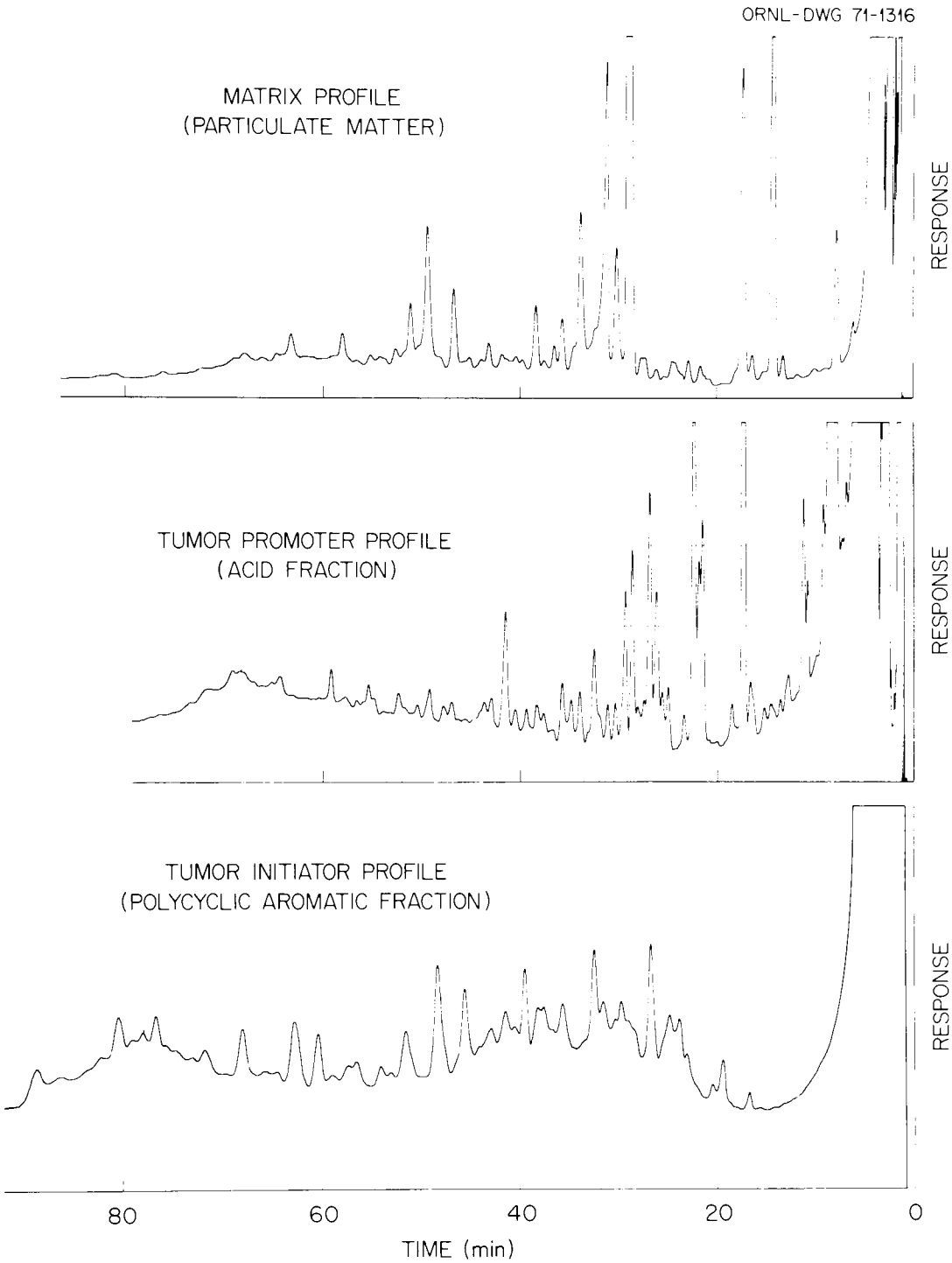

Figure 4-11 Gas chromatographic component profiles of cigarette smoke fractions.

8.00 TABLES AND FIGURES

Figure 6-1 Interim smoke generation - inhalation exposure chamber. Assembled.

Figure 6-2 Interim smoke generation - inhalation exposure chamber. Opened Side Plate.

Figure 6-3 Hamster containment assembly.

Figure 6-4 Diagrammed assembled hamster container.

Figure 6-1 Interim smoke generation - inhalation exposure chamber. Assembled.

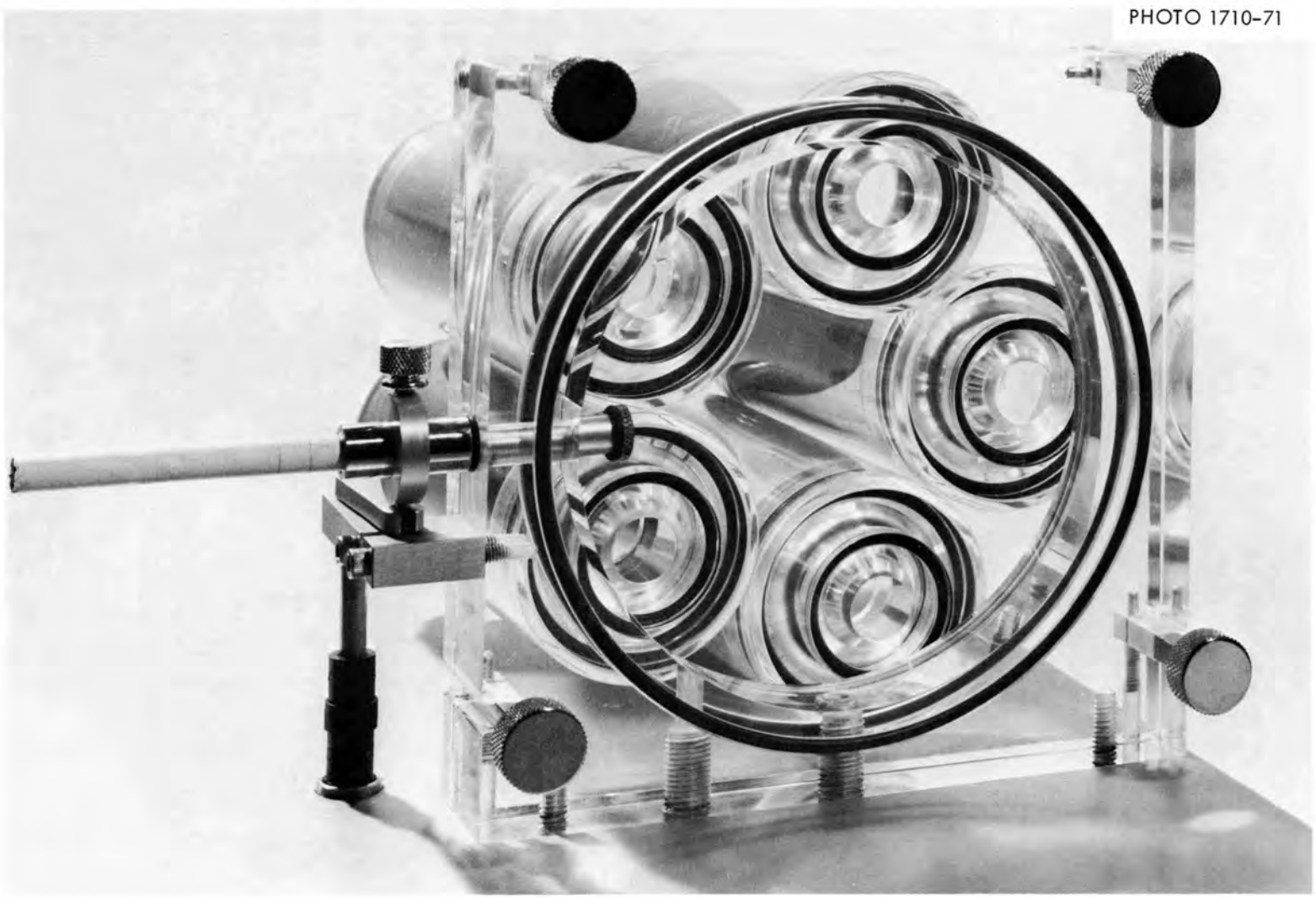

Figure 6-2 Interim smoke generation - inhalation exposure chamber. Opened Side Plate.

Figure 6-3 Hamster containment assembly.

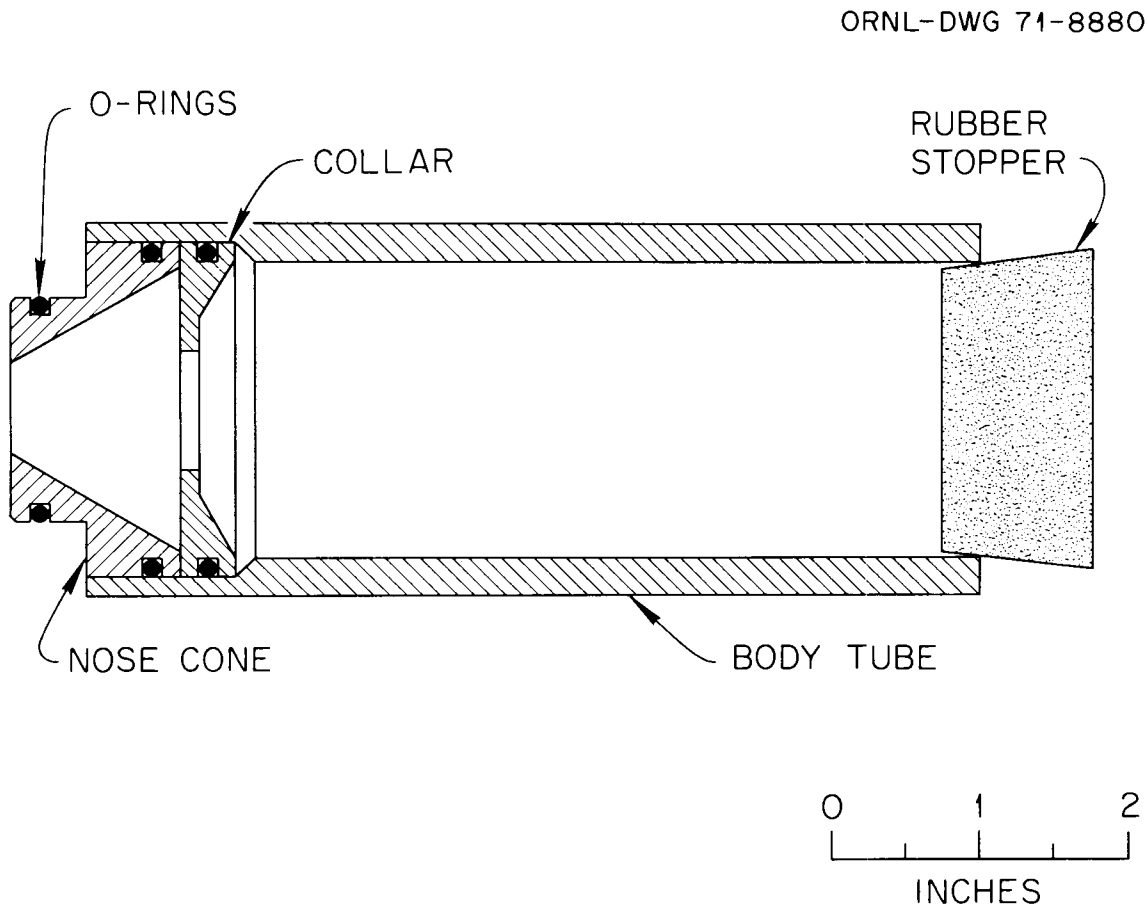

Figure 6-4 Diagrammed assembled hamster container.

Previous Reports in This Series

M. R. Guerin, W. D. Shults, Tobacco Smoke Analysis Program Progress Report for the Period January 1, 1970 to September 1, 1970, ORNL-4642 (January 1971).

ORNL-4735
UC-41 — Health and Safety

INTERNAL DISTRIBUTION

1. Biology Library
2-4. Central Research Library
5. ORNL — Y-12 Technical Library
Document Reference Section
6-40. Laboratory Records Department
41. Laboratory Records, ORNL R.C.
42. H. I. Adler
43. N. G. Anderson
44. G. E. Boyd
45. A. E. Cameron
46. J. A. Carter
47. J. H. Cooper
48. L. T. Corbin
49. D. A. Costanzo
50. D. Creasia
51. F. L. Culler
52. D. G. Doherty
53. C. Feldman
54. D. J. Fisher
55. G. Goldstein
56-76. M. R. Guerin
77. T. H. Handley
78. R. F. Hibbs
79. A. D. Horton
80. M. T. Kelley
81. F. T. Kenney
82. H. Kubota
83. W. R. Laing
84. C. E. Lamb
85. J. L. Liverman
86. W. S. Lyon
87. W. L. Maddox
88. A. S. Meyer
89. P. Nettesheim
90. G. Olerich
91. C. A. Pritchard
92. R. B. Quincy
93. W. T. Rainey
94. H. H. Ross
95. P. Rowan
96. C. D. Scott
97-98. W. D. Shults
99. M. J. Skinner
100. A. H. Snell
101. R. W. Stelzner
102. J. R. Stokely
103. D. A. Sundberg
104. R. L. Walker
105. A. M. Weinberg
106. J. C. White
107. C. Wilson
108. E. I. Wyatt
109. H. A. Laitinen (consultant)
110. G. H. Morrison (consultant)
111. M. L. Moss (consultant)
112. L. B. Rogers (consultant)

EXTERNAL DISTRIBUTION

113. M. A. Evenson, Department of Medicine, University of Wisconsin, Madison, Wisconsin 53706
114. Sidney Siggia, Department of Chemistry, University of Massachusetts, Amherst, Massachusetts 01002
115. A. R. Landgrebe, Division of Research, U.S. Atomic Energy Commission, Washington, D.C.
116. Division of Biology and Medicine, U.S. Atomic Energy Commission, Washington, D.C.
117. National Institute of General Medical Sciences, National Institutes of Health, Bethesda, Maryland
118-129. G. B. Gori, National Cancer Institute, National Institutes of Health, Bethesda, Maryland
130. J. A. Swartout, Union Carbide Corporation, New York, N.Y. 10017
131. F. G. Bock, Orchard Park Labs, Roswell Park Memorial Institute, Box 312, Orchard Park, N.Y. 14127

132. R. K. Boutwell, McArdle Laboratory for Cancer Research, University of Wisconsin, Madison, Wisconsin 53706
133. G. C. McMillan, National Heart and Lung Institute, Westwood Building, Bethesda, Maryland 20014
134. C. J. Kensler, Arthur D. Little, Inc., Acorn Park, Cambridge, Massachusetts 02140
135. T. B. Owen, National Cancer Institute, Building 37, Room 1E28, Bethesda, Maryland 20014
136. Umberto Saffiotti, National Cancer Institute, Building 37, Room 3A19, Bethesda, Maryland 20014
137. M. A. Schneiderman, National Cancer Institute, Federal Building, Room 516A, Bethesda, Maryland 20014
138. Murray Senkus, R. J. Reynolds Tobacco Company, Winston Salem, North Carolina 27102
139. A. W. Spears, Lorillard Research Center, 420 English Street, Greensboro, North Carolina 27420
140. T. C. Tso, Agriculture Research Service, Crops Research Division, Beltsville, Maryland 20705
141. B. L. Van Duuren, New York University Medical Center, 550 First Ave., New York, N.Y. 10016
142. Helmut Wakeham, Philip Morris Inc., P.O. Box 3D, Richmond, Virginia 23206
143. E. L. Wynder, American Health Foundation, 2 East End Ave., New York, N.Y. 10028
144. Laboratory and University Division, AEC, ORO
145. Patent Office, AEC, ORO

146-399. Given distribution as shown in TID-4500 under Health and Safety category (25 copies — NTIS)