LOCKHEED MARTIN ENERGY RESEARCH LIBRARIES
3 4456 0515700 4

cy. 4

ORNL-4544
UC-25 – Metals, Ceramics, and Materials

OAK RIDGE NATIONAL LABORATORY
CENTRAL RESEARCH LIBRARY
DOCUMENT COLLECTION
LIBRARY LOAN COPY
DO NOT TRANSFER TO ANOTHER PERSON
If you wish someone else to see this
document, send in name with document
and the library will arrange a loan.

ENGINEERING-SCALE DEMONSTRATION OF THE SOL-GEL PROCESS: PREPARATION OF 100 kg OF ThO_2-UO_2 MICROSPHERES AT THE RATE OF 10 kg/day

C. C. Haws
B. C. Finney
W. D. Bond

OAK RIDGE NATIONAL LABORATORY
operated by
UNION CARBIDE CORPORATION
for the
U.S. ATOMIC ENERGY COMMISSION

Printed in the United States of America. Available from
National Technical Information Service
U.S. Department of Commerce, Springfield, Virginia 22151
Price: Printed Copy $3.00; Microfiche $0.65

This report was prepared as an account of work sponsored by the United States Government. Neither the United States nor the United States Atomic Energy Commission, nor any of their employees, nor any of their contractors, subcontractors, or their employees, makes any warranty, express or implied, or assumes any legal liability or responsibility for the accuracy, completeness or usefulness of any information, apparatus, product or process disclosed, or represents that its use would not infringe privately owned rights.

ORNL-4544

Contract No. W-7405-eng-26

CHEMICAL TECHNOLOGY DIVISION

ENGINEERING-SCALE DEMONSTRATION OF THE SOL-GEL PROCESS: PREPARATION OF 100 kg OF ThO_2-UO_2 MICROSPHERES AT THE RATE OF 10 kg/day

C. C. Haws
B. C. Finney
W. D. Bond

MAY 1971

OAK RIDGE NATIONAL LABORATORY
Oak Ridge, Tennessee
operated by
UNION CARBIDE CORPORATION
for the
U. S. ATOMIC ENERGY COMMISSION

LOCKHEED MARTIN ENERGY RESEARCH LIBRARIES
3 4456 0515700 4

CONTENTS

Page

ABSTRACT 1

1. INTRODUCTION 2

2. SOL PREPARATION 5

2.1 Process Description 6

2.2 Equipment 8

2.2.1 Feed Preparation 8
2.2.2 Preparation of Sol by Amine Solvent Extraction . . 10
2.2.3 Evaporator 14

2.3 Results and Material Balances 14

2.4 Summary and Conclusions 18

3. PREPARATION OF MICROSPHERES 19

3.1 Formation of Microspheres 20

3.1.1 Equipment. 22
3.1.2 Results. 30

3.2 Drying. 39

3.2.1 Process Description. 39
3.2.2 Laboratory Support Studies 45
3.2.3 Results. 55

3.3 Firing. 59

3.3.1 Process Description. 59
3.3.2 Equipment. 60
3.3.3 Results. 62

3.4 Material Balance. 66

3.4.1 Normal Process Wastes or Losses. 66

3.5 Conclusions 68

4. ACKNOWLEDGMENTS. 70

5. REFERENCES 70

6. APPENDIX 73

6.1 Analytical Data Collected During the 10-day Continuous Test 73

6.2 Sample Calculation of Still Feed Rate Required to Maintain a Desired Steady-State Water Content in the 2EH of the Column 76

Page

6.3 Analytical Data for 2EH in the Column System and for the Condensate Leaving the Distillate System. 76

6.4 Contaminant Levels in Calcined Microspheres 76

6.5 Roundometer Analysis of the Batches of Calcined Product . . 79

6.6 In-Line Measurement of the Water Content of Recycled 2EH. . 80

6.7 Calculation of the Time Required to Reach Steady-State Concentration in a Continuously Purged System 82

6.8 Procedure for Operating the Dryer 83

6.9 Procedure for Operating the Calciner. 85

ENGINEERING-SCALE DEMONSTRATION OF THE SOL-GEL PROCESS: PREPARATION OF 100 kg OF ThO_2-UO_2 MICROSPHERES AT THE RATE OF 10 kg/day

C. C. Haws
B. C. Finney
W. D. Bond

ABSTRACT

Microspheres of the composition 81% ThO_2--19% UO_2 were prepared in a near-continuous, engineering-scale demonstration at the rate of 10 kg (Th + U)/day. Approximately 120 kg of ThO_2-UO_3 gel microspheres were produced. Sol preparation by the amine extraction process was routine and reproducible, and a 99.5% yield of 1.6 M ThO_2-UO_3 sol was obtained, based on the metal nitrate feed. A material balance of 100.2% was achieved. No significant problems are anticipated in adapting this sol preparation process to fully remote operations.

Microsphere-forming results showed that yields of up to 95% (based on sol fed to the system and product-grade microspheres) are attainable when 250- to 450-μ-diam spheres (calcined) are produced using multiple two-fluid nozzles and the sol droplets are gelled in 2-ethyl-1-hexanol (2EH). The material balance was 99.5%. Addition rates of surfactants required to maintain sustained operation of the sphere-forming column demonstrated the need for a cleanup and recycle process for the 2EH in long-term operations.

The operation of batch, fixed-bed dryers of 20-kg capacity, previously used for drying ThO_2 gel microspheres, proved to be unsuccessful for drying ThO_2-UO_3 microspheres because of uncontrollable, deleterious temperature excursions. The method of heat input to the bed by external heating and the instrumentation provided for measuring bed temperatures made it impossible to carry out the drying step in the required turnaround time (i.e., 48 hr). After an adequately designed dryer had been installed, 20-kg batches of the ThO_2-UO_3 gel microspheres were successfully dried in the specified time. No problems were encountered in firing 10-kg batches of dried gel microspheres in a fixed-bed calciner.

The product microspheres met High-Temperature Gas-Cooled Reactor specifications with regard to size, Th/U atom ratio, roundness, O/U atom ratio, gas release, density, and carbon content.

1. INTRODUCTION

The purpose of the work described in this report was to demonstrate the long-term, continuous preparation of ThO_2-UO_2 microspheres by the sol-gel process in engineering-scale equipment. Microspheres of ThO_2-UO_2 are an important fuel form in the High-Temperature Gas-Cooled Reactors (HTGRs) proposed by Gulf General Atomic (San Diego, Calif.). The principal steps in the sol-gel process for manufacturing ThO_2-UO_2 microspheres are: (1) the preparation of aqueous sols of ThO_2-UO_3 by amine extraction of nitric acid from thorium-uranium(VI) nitrate solutions, (2) the formation of ThO_2-UO_3 gel microspheres by extraction of water from droplets of the sol with 2-ethyl-1-hexanol (2EH) containing surfactants, (3) drying the gel microspheres, and (4) firing the gel product to high-density ThO_2-UO_2.

The sol-gel process for preparing ThO_2-UO_2 microspheres had been previously demonstrated in the laboratory[1,2] on the gram scale and in engineering equipment[3-6] on the kilogram scale. In the engineering-scale work, we had demonstrated process feasibility in runs of about 6-hr duration. In many of these runs, the equipment for both sol preparation and microsphere formation was shut down at night and operation was resumed the following day; thus, we had had some prior experience with the reuse of the solvents employed in both operations. Nevertheless, we needed to establish our capability for long-term, continuous operation and to identify any operating and equipment problems that might occur under sustained operations. The collection of product yield and material balance data under these conditions was of paramount importance. Such information will be required for the design of remotely operable equipment for the preparation of HTGR recycle fuel containing ^{233}U. In the study presented here, depleted uranium was used in place of ^{233}U. (Radiation from ^{233}U and its associated ^{232}U impurity had no deleterious effects on the process steps in a concurrent program in which batches totaling 32 kg of ThO_2-$^{233}UO_2$ microspheres were prepared.[7])

We did not expect to encounter difficulties in recycling the amine solvent used in the sol preparation since the process for regenerating the amine does not produce any degradation products in the recycled solvent. On the other hand, degradation products would build up in the 2EH

of the sphere-forming process since a distillation step is used to remove water. During distillation, the nitric acid (which is extracted by the 2EH from the sol) attacks and degrades the surfactants. Surfactant losses thus incurred can be offset by periodic additions and are, therefore, of little concern. Degradation products are nonvolatile and remain in the 2EH, continually accumulating during sustained operation. We did not know, however, the effects of the accumulation of surfactant degradation products on long-term, continuous column operation. The determination of these effects was a primary objective of this study. The study of the variables affecting drying and firing of the spheres, while obviously important, became a secondary objective.

Sol preparation and microsphere-forming operations were planned to cover continuous, round-the-clock ten-day periods at the rate of 10 kg/day (oxide basis). Drying and firing of the microspheres were to be carried out batchwise in a fixed-bed dryer of 20-kg capacity and a furnace of 10-kg capacity. The dryer which we planned to use had been used in previous ThO_2 microsphere work. The complete operating cycle for the dryer in the previous work was 42 hr; thus, its batchwise operation should keep pace with the microsphere-forming column. The calciner was obtained by revising a furnace left over from an earlier study.[8] A complete operating cycle of the furnace required 36 hr; hence, its production time did not match the rest of the pilot plant.

Because of manpower requirements, the sol and microsphere preparation work could not be carried out simultaneously. Therefore, sol preparation was completed before microsphere forming commenced. Operation of the microsphere-forming column and the fixed bed dryers could be carried out concurrently since the equipment for both operations was located in the same room in Bldg. 4508. Firing was carried out in a separate campaign because the equipment necessary for this operation was located in Bldg. 4501.

ThO_2-UO_3 gel microspheres had not been previously dried and fired in the required batch sizes (i.e., 20 and 10 kg, respectively); consequently, we did know whether the larger dryer and calciner batches could be processed satisfactorily. Exothermic reactions had occurred during the drying

of ThO_2 microspheres,[9] and ThO_2-UO_3 microspheres were known to be more reaction prone. A scouting run was made using a 5-kg batch of ThO_2-UO_3 gel product in the existing dryer. A temperature excursion occurred, producing an almost instantaneous temperature rise of 200°C, but the breakage of microspheres was less than 10%; therefore, it appeared that this dryer might be used successfully. A steam atmosphere would be used to help suppress exothermic reactions and a slow heating cycle employed to obtain uniform temperature distribution throughout the bed. A total cycle time of 48 hr was available as controlled by the column, and we planned to use all the allotted time.

A furnace was available which met the rudimentary requirements for testing our calciner concept. In the work now described we were primarily interested in demonstrating the operability of this type of calciner. Accompanying a successful calciner test, data relating to the incidence of microsphere breakage, interparticle sintering, production of particles with acceptable densities, carbon contents, O/U atom ratios, and gas release could be obtained. Later, an improved design would remove any objectionable features.

Specifications for the ThO_2-UO_2 microspheres are given in Table 1. Most of these specifications were taken from the PSC Reference Design Handbook.* Some product properties related to process control in calcination are not given in this handbook, but have been defined as indicated.[10] The Th/U atom ratio is controlled by controlling the composition of the feed used in the sol preparation process. Particle size and particle roundness are dependent on conditions used during the formation of gel spheres. Although lack of roundness can be caused by cracking and chipping in subsequent drying and firing steps, the primary control still lies in the sphere-forming operation. The remaining specifications are controlled primarily by the drying and firing processes. Contaminant levels are controlled primarily by the purity of the thorium and uranium nitrate feed solutions and other process chemicals and by selection of materials of construction.

---

*PSC Reference Design Handbook, prepared by Gulf Energy and Environmental Systems, Inc. and Public Service of Colorado, Nov. 6, 1968.

Table 1. Specifications for ThO_2-UO_2 Microspheres to Be Used in HTGR Applications

Variable	Specifications	Source of Specifications
Particle size	250-450 μ (mean size not specified)	PSC Handbook
Th/U atom ratio	4.25	PSC Handbook
Permissible contaminant levels	10 ppm of B or equivalent; 600 ppm of Fe	PSC Handbook
Particle roundness	$D_{Max}/D_{Min} \leq 1.10$	PSC Handbook
O/U atom ratio	< 2.03	ORNL
Gas release	0.3 cc/g to 1200°C	ORNL
Particle density	> 95% of theoretical[a]	ORNL
Carbon content	< 500 ppm	ORNL

[a]Theoretical is 10.17 g/cc.

2. SOL PREPARATION

The preparation of ThO_2-UO_3 sols by the amine extraction process[1-5] consists of extracting nitric acid from a dilute solution of thorium-uranium(VI) nitrates with a secondary amine (Amberlite LA-2) to form a dilute ThO_2-UO_3 sol that is about 0.3 M in heavy metals (Th + U). The dilute sol is then concentrated to greater than 1 M, by evaporation of water, to give a product that is suitable for use in forming microspheres. In the work presented in this report, a dilute sol having a Th/U atom ratio of 4.25 was evaporated to 1.6 M (Th + U). It was very fluid at this concentration. The preparation of the dilute sol by the amine extraction process and the regeneration of the amine were carried out continuously for 10 days, producing an 81% ThO_2 - 19% ThO_3 sol at the rate of 10.4 kg of (Th + U)/day. The preparation of the dilute $Th(NO_3)_4$ - $UO_2(NO_3)_2$ feed solution and the concentration of the dilute sol were effected in batch processes at rates of preparation that kept pace with the continuous operation of the amine extraction equipment. The results demonstrated the feasibility of the continuous operation of the amine extraction process and confirmed that a reproducible sol product could be obtained.

2.1 Process Description

The engineering-scale amine solvent extraction equipment (Sect. 2.2) was operated continuously for a ten-day period to produce an 81% ThO_2 - 19% UO_3 sol containing approximately 108 kg of (Th + U) and to demonstrate the feasibility and consistency of operation of the amine solvent extraction process.[1-5] A uniform product was obtained throughout the operation.

The ThO_2-UO_3 sol was prepared by extracting the nitrate from a dilute $Th(NO_3)_4$ - $UO_2(NO_3)_2$ - HNO_3 feed, which was about 0.36 M in (Th + U) and about 1.37 M in total NO_3^-, by contact with about 30% excess 0.75 M Amberlite LA-2 (a secondary amine) in an n-paraffin diluent. The countercurrent chemical flowsheet (Fig. 1) that was used in the preparation consists of three nitrate extraction steps, a water scrub step, and a solvent regeneration step. The composition of each of the various aqueous and solvent streams is the average analysis of ten samples taken at approximately the same time during each day of operation.

The nitrate feed, combined with the scrub water and spent amine from stage 3, flows cocurrently through the first extraction stage. The aqueous phase leaving stage 1 is digested under gentle reflux conditions for 30 min to facilitate crystallite formation; during this period, additional nitrate is released for extraction, as is evident by the increase in conductivity from 6.81 to 9.48 millimhos/cm and the decrease in pH from 4.12 to 3.24. The formation of crystallites is accompanied by a change in color from yellow to reddish-orange. The nitrate that is released is extracted in two stages. The flow of aqueous phase and solvent is cocurrent with respect to the first and second extraction stages. Amine leaving the first stage is used as the extractant in the second stage; thus the small amount of uranium that is extracted in the first stage can be stripped back into the aqueous phase in stage 2, where the low nitrate concentration favors distribution of uranium into the aqueous phase. Freshly regenerated amine is used as the extractant in the third stage in order to facilitate the final removal of nitrate from the sol.

The nitrate extracted in the first, second, and third stages amounted to about 84, 10, and 4%, respectively. The entrainment of solvent in the sol was about 0.02 vol %. The nitrate-laden solvent was scrubbed with

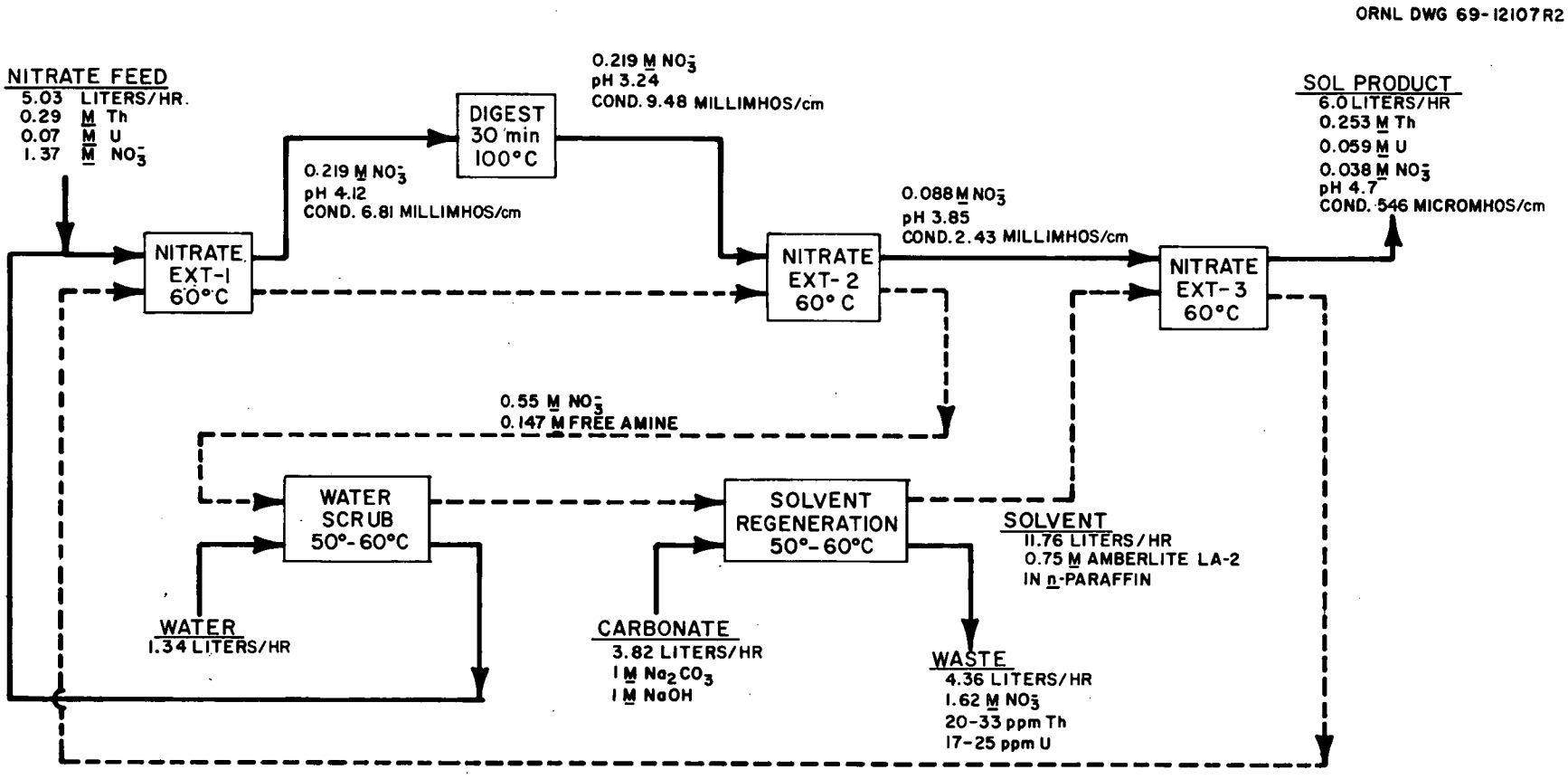

Fig. 1. Countercurrent Flowsheet for the Preparation of 120 kg of 81% ThO_2 - 19% UO_3 Sol by Amine Solvent Extraction.

water to remove entrained sol and was then regenerated by contact with about 10% excess 1 M Na_2CO_3 - 1 M NaOH solution. The thorium and uranium losses to the aqueous phase leaving the regeneration stage (i.e., a waste stream) were negligible— 20 to 33 ppm and 17 to 25 ppm, respectively.

The dilute sol [∿0.3 M in (Th + U)] was concentrated at atmospheric pressure in a batch, forced-circulation, vertical-tube evaporator (Sect. 2.2.3) to about 1.64 M (Th + U) prior to being used in forming 300- to 500-μ-diam microspheres. The sol was pumped from the sol product drum to a 33.16-liter capacity head tank. The sol flowed to the evaporator continuously, via gravity, through a level-control-actuated, air-operated valve; after all the sol had entered the evaporator, a final adjustment in volume was made to give a concentrated sol of desired composition. The evaporator was operated, as necessary, to keep pace with the production of dilute sol.

2.2 Equipment

The order in which the equipment used for the process operations is discussed corresponds to that of the sequence of the process steps.

2.2.1 Feed Preparation

Since no specially designed engineering equipment was available for feed preparation in the present study, we simply carried out batch operations manually to prove the validity of our concept of feed preparation (i.e., the dilution of a concentrated stock solution with water to yield a feed of suitable concentration for use in the amine extraction process). In our preparation of dilute feed (see the flowsheet in Fig. 2), the Th/U atom ratio was carefully adjusted to 4.25. (Dilution factors and feed stock concentrations other than those shown in Fig. 2 could be used to achieve the same result.) Feed that was about 0.36 M in (Th + U) was prepared in 100-liter batches by diluting the approximately 1.5 M feed stock solution with water. One batch of this dilute feed was used per day in the production of sol.

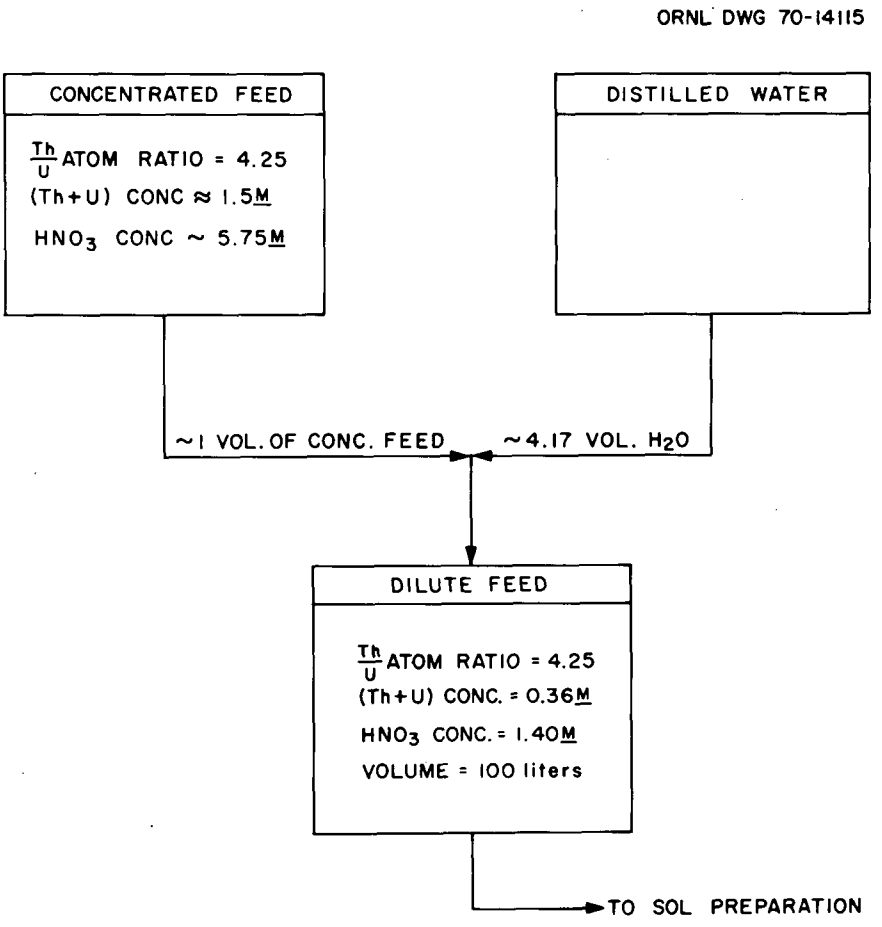

Fig. 2. Material-Balance Flowsheet for Batch Preparation of Dilute $Th(NO_3)_4$–$UO_2(NO_3)_2$–HNO_3.

Volumetric glassware was used to measure the feed stock solution and the volumes of water necessary for dilution. The solutions were simply poured into containers of the appropriate volume and mixed by hand. Similar operations were used to prepare the concentrated stock solution.

In our opinion, a feed preparation step involving the dilution of a concentrated stock solution having the desired atom ratio has two distinct advantages. First, the volumes of the feed storage vessels are considerably reduced. Second, precise adjustment of the Th/U atom ratio in concentrated solutions reduces, by several hundred percent, the volumes of solution that must be carefully blended.

2.2.2 Preparation of Sol by Amine Solvent Extraction

A photograph of the engineering-scale amine solvent extraction equipment[3,4] is shown in Fig. 3; an equipment flowsheet is presented in Fig. 4. The process equipment consists of five mixer-settlers, appropriate tankage, and metering pumps. The process is controlled by adjusting the flow rates of the various streams entering the system.

Each mixer-settler (Fig. 5) is made of 3-in.-diam glass pipe to permit observation of the process streams and operating characteristics. It is divided into six compartments, each of which has a mixing impeller; the six impellers are mounted on a common shaft with a variable-speed drive. The aqueous and organic phases enter at the top and flow cocurrently down through the six compartments to give the effect of mixing vessels in series. This arrangement ensures good stage efficiency. The mixer is designed in such a manner that the aqueous phase is dispersed into the organic phase (organic continuous) to minimize emulsification. At shutdown, the aqueous phase drains out of the vessel; consequently, only the organic phase is present at startup, and the aqueous stream is easily dispersed as it enters. Each mixer is equipped with two U-shaped sections of stainless steel tubing through which hot water is circulated to maintain the organic and aqueous phases at about 60°C.

Phase separation occurs in the section located below the mixer. The position of the interface is controlled by adjustable weirs on both the aqueous and the organic overflow lines. The nominal volumetric capacity

ORNL PHOTO 85437 A

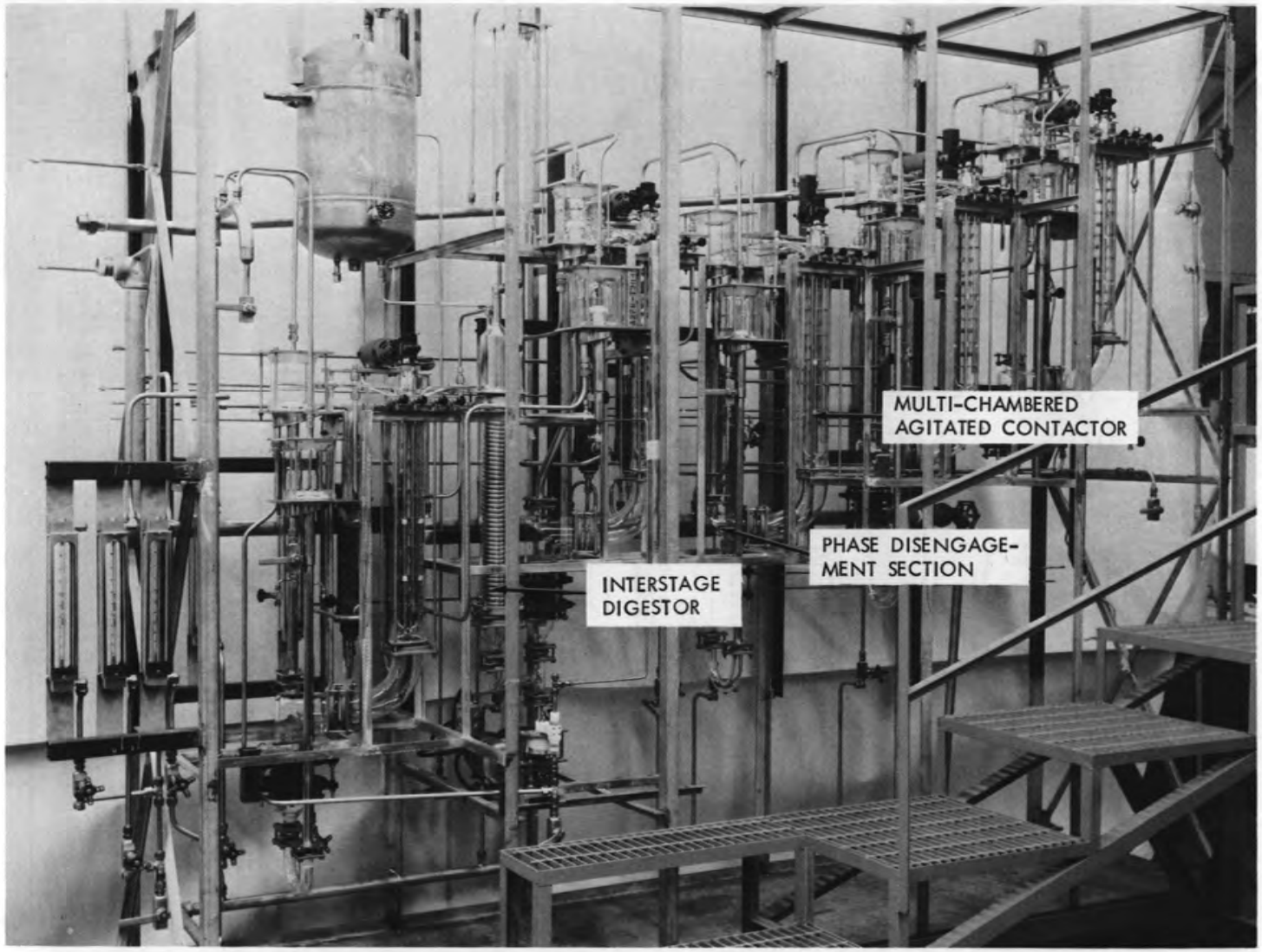

Fig. 3. Amine Solvent Extraction Equipment for Preparing ThO_2–UO_3 Sol.

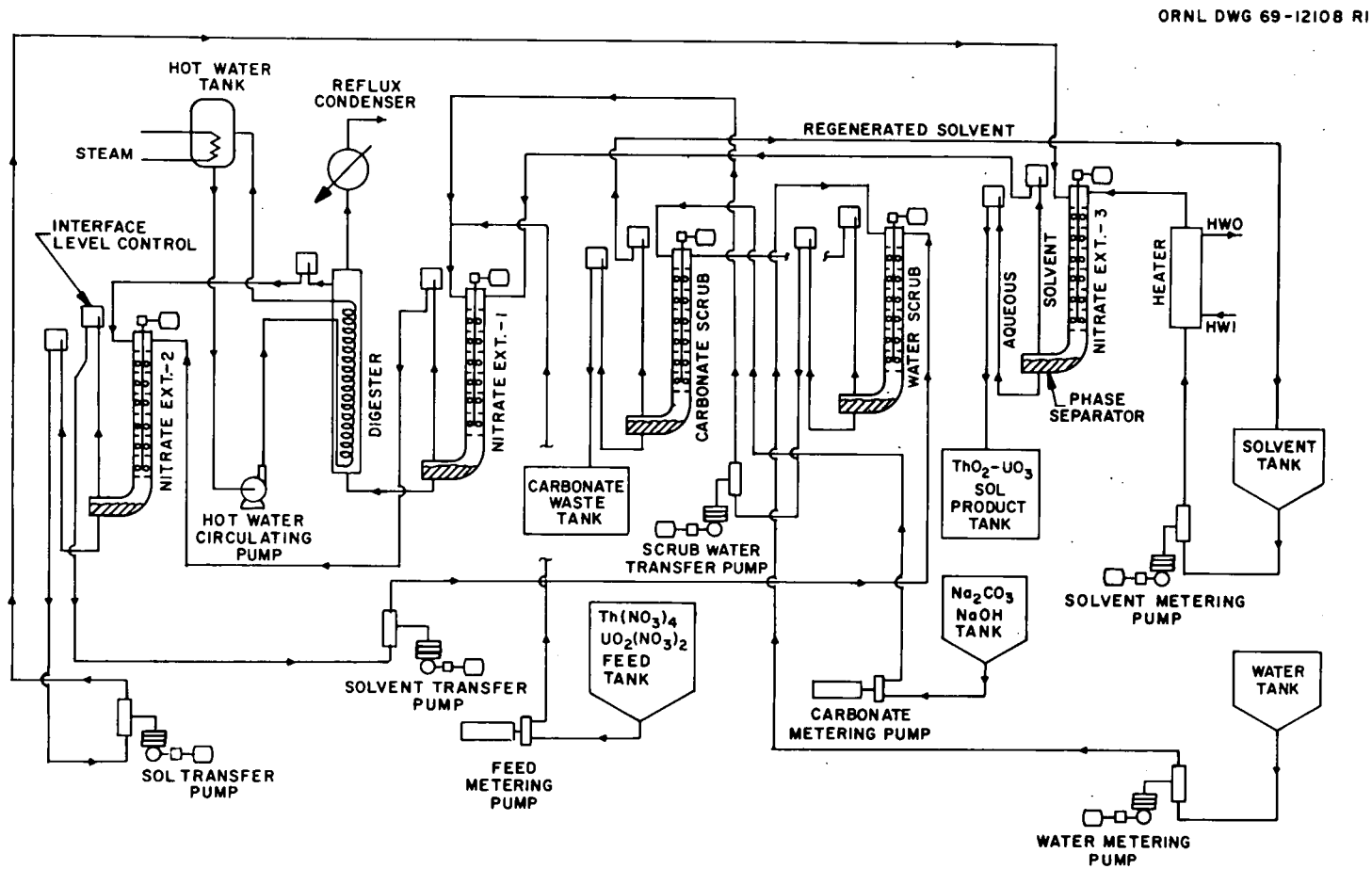

Fig. 4. Equipment Flowsheet for the Preparation of ThO_2–UO_3 Sol by Amine Solvent Extraction.

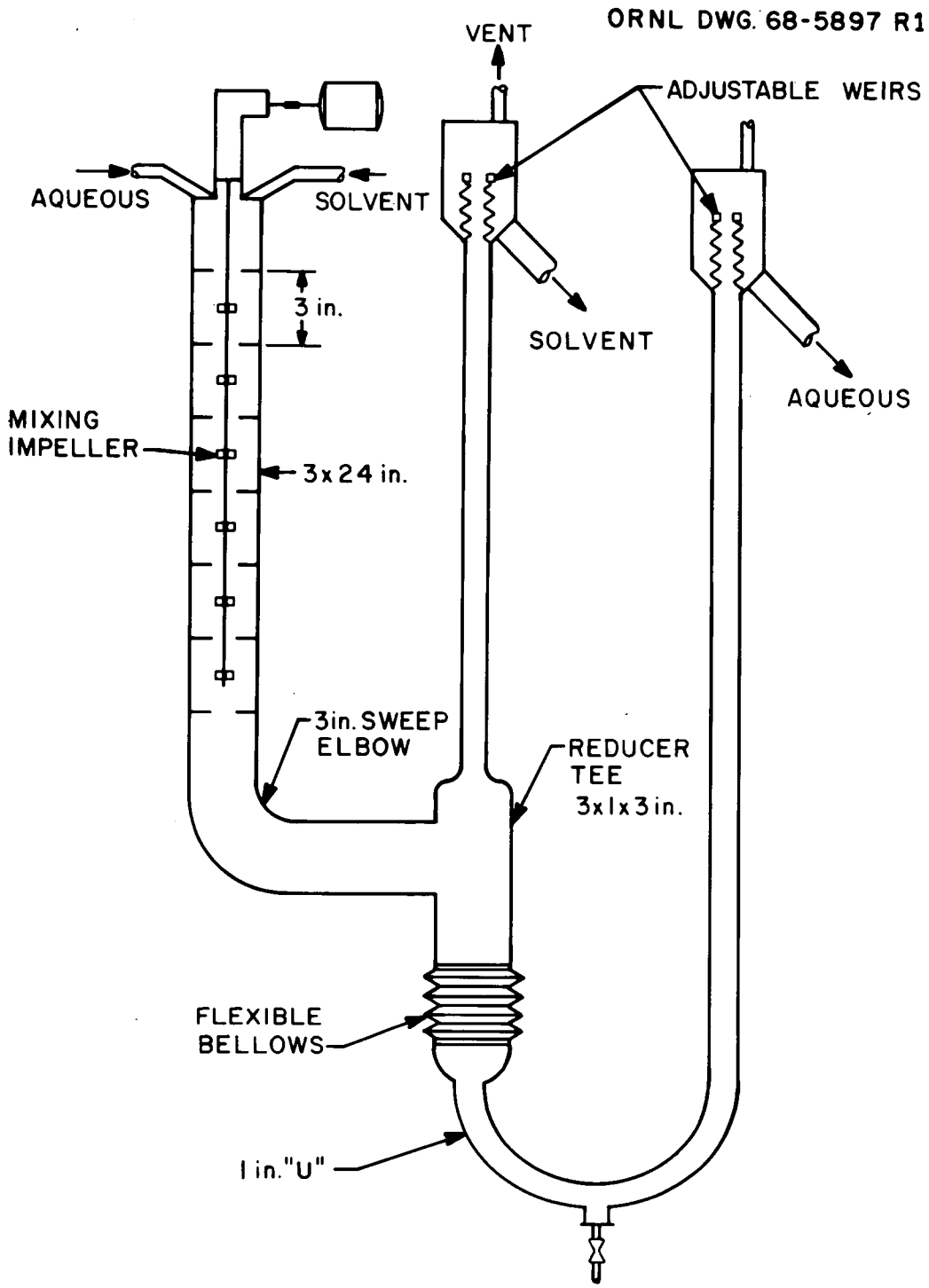

Fig. 5. Mixer-Settler Stage.

of the mixing section is 2.0 liters, while that of the settler is 2.8 liters of organic phase and 1.5 liters of aqueous phase.

The digestor, a 2-ft length of 3-in.-diam glass pipe, is part of the aqueous-phase jackleg in the first nitrate extraction stage. Heat is supplied by circulating pressurized hot water through an internal coil made of 3/8-in.-diam stainless steel tubing; a reflux condenser is connected to the top of the digestor and the sol flows upward to minimize longitudinal mixing.

2.2.3 Evaporator

The forced-circulation, vertical-tube evaporator is shown in Fig. 6. The sol is circulated from the flash chamber, via a canned-rotor pump, through the heater to a cyclone vapor-liquid separator. The vapors are condensed in a downdraft heat exchanger. The sol enters the evaporator through an air-operated valve at a rate that is regulated by a gas-bubble-level controller; after all the dilute sol has been added to the evaporator, a final volume adjustment is made to attain ThO_2-UO_3 sol of the desired concentration, and the evaporation rate is controlled by the steam pressure on the heater. The single-pass heater has three tubes, each of which is 0.5 in. in diameter and 30 ft long. The sol is circulated at the rate of about 15 gpm to obtain a high liquid velocity and, in turn, a low-temperature differential in the heater. The sol enters the cyclone separator through a tangential nozzle, and back pressure prevents boiling in the tubes. These features minimize local drying of the sol.

2.3 Results and Material Balances

The overall material balances for (Th + U) for the 10-day operating period were 100.2% for the solvent extraction equipment and 100.4% for the evaporator (Table 2). Periodic analyses of samples showed that there was very little fluctuation in the compositions of the flowing streams during the run. Typical results are given in Table 3.

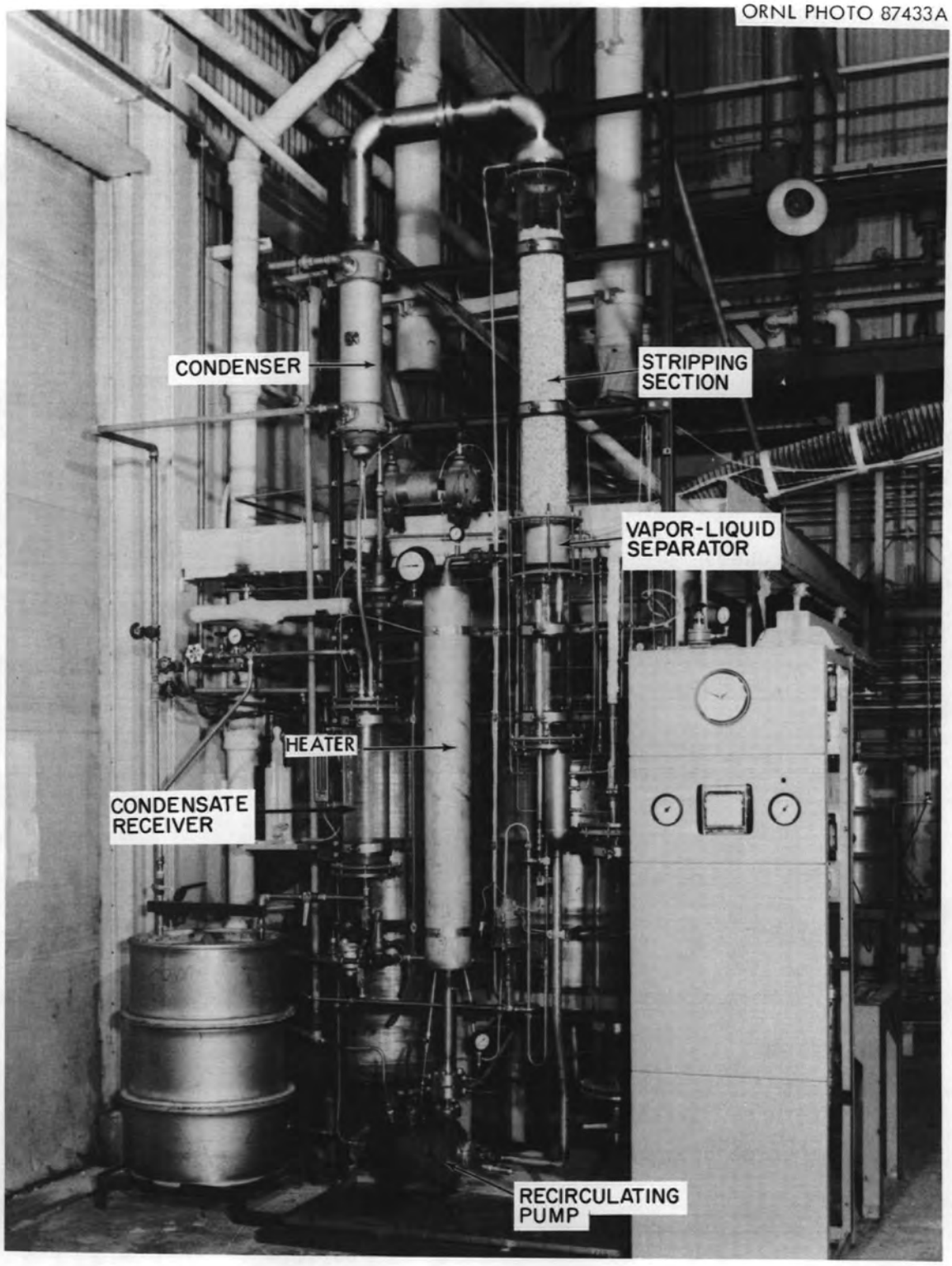

Fig. 6. Vertical-Tube, Forced-Circulation Evaporator.

Table 2. Overall Material Balances for the 10-day Continuous Operation of Amine Solvent Extraction Equipment to Produce Approximately 120 kg of 81% ThO_2 - 19% UO_3 Sol

	Quantity of Material Found (% of Material Fed)	kg (Th + U)
Sol Preparation by Solvent Extraction		
Entering system		
Dilute feed	100	108.5
Exiting from system		
5 liters leaking out pump seal	0.41	0.44
50 liters remaining in feed tank at conclusion of run	3.90	4.23
Sol product (forty-three 33.16-liter batches)	95.31	103.39
4.6 liters in sol product drum at conclusion of run	0.30	0.33
2.15 liters of samples	0.15	0.16
1.18 liters of sample purges	0.07	0.08
Carbonate scrub (waste)	0.05	0.05
Total	100.19	108.68
Overall material balance, %	100.2	100.2
Sol Concentration by Forced-Circulation Evaporation		
Entering system		
Dilute sol feed (forty-three 33.16-liter batches)	100	103.39
Exiting system		
Concentrated sol product (forty-three ~6.4-liter batches)	100.4	103.79
Overall material balance, %	100.4	100.4

Table 3. Typical Flow Rates and Analyses Obtained During 10-day Continuous Run Producing 81% ThO_2 - 19% UO_3 Sol by Amine Solvent Extraction

	Flow Rate (liters/hr)	Th Conc. (M)	U Conc. (M)	(Th + U) (M)	NO_3^- (M)	NO_3^-/Metal Mole Ratio	Free Amine (M)	pH	Conductivity (millimhos/cm)	CO_3^- (M)	OH^- (M)	Density at 22°C	Viscosity (centistokes at 25°C)
Nitrate Feed	5.031	0.29	0.07	0.36	1.37								
First Extractor													
Aqueous phase					0.219			4.12	6.8				
Organic phase													
Digestor													
Aqueous phase					0.219			3.24	9.48				
Second Extractor													
Aqueous phase					0.088			3.85	2.43				
Organic phase					0.55		0.147						
Third Extractor													
Aqueous phase	6.0	0.253		0.311	0.038	0.122		4.7	0.546				
Organic phase	11.76						0.73						
Water Scrub													
Aqueous phase	1.337	0.0065	0.0019										
Organic phase		1-7 ppm	0.5-5 ppm							1	1		
Carbonate Regeneration													
Aqueous (in)	3.82												
Aqueous (out)		20-33 ppm	17-25 ppm		1.62								
Organic phase					0.026		0.73						
Composite Concentrated Sol		1.324	0.313	1.64	0.184	0.112		5.07	2.72			1.403	1.37

The results of the analysis of the thirteen 100-liter batches of feed used in the preparation of sol are presented in Sect. 6.1. The (Th + U) concentration varied only slightly— from 0.357 to 0.373 M. A total of 108.5 kg of (Th + U) entered the solvent extraction system, and 108.7 kg of (Th + U) left the system. Of the quantity leaving the system, 103.7 kg (which is equivalent to 119.3 kg of 81% ThO_2 - 19% UO_3) was found in the sol product.

A total of 103.4 kg of (Th + U) was present in the forty-three 33.16-liter batches of dilute sol that entered the evaporator. Results of the analysis of these batches of feed are also presented in Sect. 6.1. There was only a minimal variation in the concentration of the dilute sol, as indicated by the narrow ranges of (Th + U) molarity (0.302 to 0.321), electrical conductivity (500 to 550 micromhos/cm), and NO_3^-/(Th + U) mole ratio.

The dilute sol was concentrated by a factor of about 5 in the evaporator. The analyses of the 43 batches of concentrated sol [103.8 kg of (Th + U)], equivalent to 119.4 kg of 87% ThO_2 - 19% UO_3, are presented in Sect. 6.1. The batches are quite consistent with regard to nitrate-to-metal ratio, electrical conductivity, and apparent pH. The concentrated sol from evaporator runs 1-22 and runs 23-43 were combined into composites No. 1 and No. 2, respectively (see Table 11). These composites, designated as EV-36-1 and EV-36-2, were used as feed for the microsphere preparation run.

About 0.04% of the (Th + U) was lost to the carbonate scrub waste stream; analyses of the 43 batches of condensate collected during concentration of the sol averaged about 1 to 5 ppm (Th + U).

2.4 Summary and Conclusions

The 10-day round-the-clock operation to prepare about 104 kg of (Th + U) as approximately 1.6 M 81% ThO_2 - 19% UO_3 sol by the amine solvent extraction process[1,2] was successful. The equipment was operated for 237 hr out of a possible 240 hr (3 hr was required for startup and shutdown) without any interruptions. The operation of the equipment was very routine; it consisted simply of maintaining an adequate supply of liquid

in the feed tanks and occasionally checking the pumping rates of the entering streams. Consequently, no real difficulties are foreseen in adapting the process to large-scale remote operation. The desired production rate of 10 kg of (Th + U) per day was easily attained.

The (Th + U) content of the thirteen 100-liter batches of feed used in the preparation of sol varied only slightly (0.357 to 0.373 M), and a sol product that was 0.302 to 0.321 M in (Th + U) was consistently produced. The loss of (Th + U) to the carbonate scrub waste amounted to only 0.04% of the feed entering the system. The entrainment of solvent in the sol product was approximately 0.02 vol %; this material was removed in the condensate during evaporation. The sol was readily concentrated to about 1.6 M (Th + U) and remained very fluid (viscosity, 1.37 to 1.63 centistokes).

3. PREPARATION OF MICROSPHERES

After five days of sustained column operation in which good-quality microspheres were produced, the test was interrupted due to difficulties with the original drying equipment. Attempted operation of the dryer within the required drying time of 48 hr resulted in repeated exothermic chemical reactions. Excessive temperature rises resulted, causing 50 to 100% breakage of the product. This trouble with the drying equipment was the only significant problem encountered during the test.

After designing, constructing, and installing a new fixed-bed dryer with more efficient means for uniformly heating the bed and for controlling the heating rate throughout the bed, we resumed operations for the final five days of the run. This portion of the test was completed without difficulty.

The microspheres produced during this final period were calcined and evaluated against our specifications. The measured values for product density, carbon content, O/U atom ratio, and gas release exceeded HTGR specifications. Product contamination levels exceeded specifications. The yield was calculated to be 84% (based on sol feed). Thus our test proved the fixed-bed calciner concept satisfactory.

3.1 Formation of Microspheres

The microsphere-forming process and the equipment flowsheet (Fig. 7) used for the 10-day operation have been discussed in an earlier publication.[6] Only a brief description of certain main features of the process is included here.

In the microsphere-forming process, gel microspheres are produced as water is extracted from droplets of a given sol by 2-ethyl-1-hexanol (2EH). The droplets are fluidized by an upflowing stream of 2EH until they are gelled. The settling velocity of the spheres increases as the water is extracted. Proper selection of the fluidizing velocity of 2EH allows preferential removal of gelled product and permits continuous operation.[6]

The addition of surfactants to the 2EH is required in order to stabilize the spherical shape of the sol droplets during water extraction. Two surfactants are used in combination to facilitate the formation of ThO_2-UO_3 gel spheres: Span 80* and Ethomeen S/15.** The proper concentrations of nitric acid and water are also necessary to obtain a spherical gel product.[6,11] If these proper concentrations are not maintained during operation of the forming column, gel particles that are cracked, distorted, clustered, or surface-pitted are produced.

The water content of the system is controlled by removing water from the 2EH via distillation at 150°C. A 2EH sidestream is passed through the still and returned to the system. The rate of circulation to the still depends upon the sol flow rate and the desired water content of the 2EH (see Sect. 6.2 for sample calculation). Losses of surfactant occur during distillation as the result of reactions with nitric acid, which is extracted from the sol.[11] The 2EH also reacts with the nitric acid, but to a lesser extent. The rate of decrease of surfactant concentration depends on the sol feed rate and the 2EH distillation rate relative to the 2EH

---

*Atlas Chemical Company's tradename for sorbitan monooleate.

**Armour Chemical Company's tradename for a tertiary amine having the formula

$$\begin{array}{l} (CH_2\text{-}CH_2O)_2H \\ \;\;|\\ R\text{-}N \\ \;\;|\\ (CH_2\text{-}CH_2O)_3H\ , \end{array}$$

where R is a 16- to 18-carbon chain.

ORNL DWG 67-3687R3

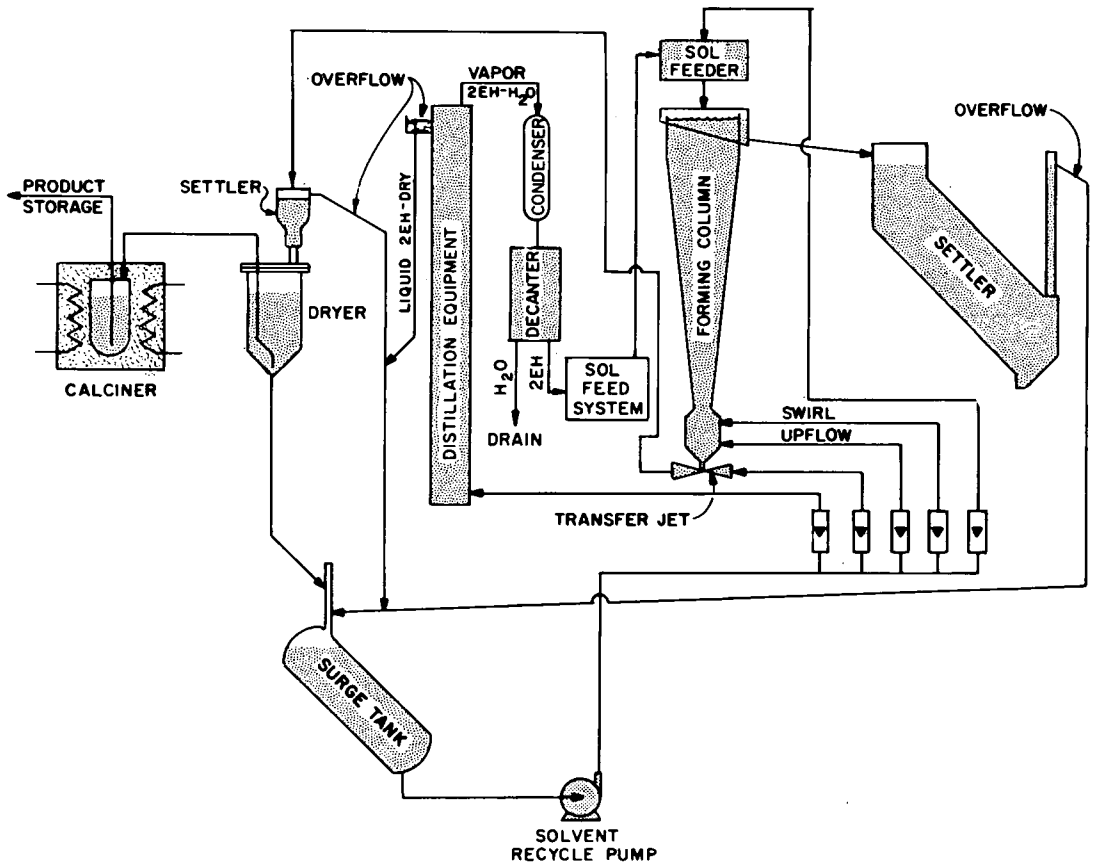

Fig. 7. Improved and Simplified Equipment Flowsheet for the Preparation of Microspheres.

inventory in the entire column system at a fixed distillation temperature. In our system, the recirculation rate was roughly equivalent to passing the entire 2EH inventory through the still once every hour. The losses of surfactants and the buildup of impurities from the reactions occurring in the still, therefore, take place relatively slowly.

Past experience, largely involving the preparation of ThO_2 microspheres, has shown that the periodic addition of surfactants to the 2EH gives satisfactory results for continuous operation of our sphere-forming columns. The rate at which the additions are made is established empirically from visual observations of particles in the column and from microscopic examination of the product. We have not determined the levels at which impurities would begin to cause significant effects on microsphere formation. We had hoped to gain this information during our sustained 10-day run so that, if necessary, we could establish methods for the removal of such materials in the 2EH recycle.

3.1.1 Equipment

The key equipment items in the gel microsphere-forming system are the sol droplet disperser, metering equipment for controlling the flow of sol to the disperser, the forming column, settlers to remove fines from the 2EH overflow from the column and to collect the microspheres from the bottom of the column, a distillation unit for water removal from the 2EH, and a pump for maintaining 2EH flow throughout the system. The equipment flowsheet (see Fig. 7) that we used represents our accumulated experience over a number of years.[12] This flowsheet provides fewer items of equipment and simpler controls than some of our earlier flowsheets. The microsphere-forming column and its associated equipment are located in our Coated Particle Development Laboratory (CPDL) and is frequently referred to in our publications on HTGR work as the CPDL equipment.

Sol Disperser. — The sol is dispersed into droplets that are released into the 2EH at the enlarged top of the tapered fluidization column. The type of sol disperser that is selected for use depends on the overall requirements of the sphere-forming operation, including droplet size, uniformity, and production capacity.[6] We selected the two-fluid nozzle

for the study described in this report because it gives a more uniformly sized product in the desired size range of 250- to 450-μ-diam calcined microspheres. The desired throughput of 10 kg of (Th + U) per day was achieved by using a multiple two-fluid nozzle disperser (see Figs. 8 and 9) and a flow rate of 18.2 cc/min for the 1.64 M (Th + U) sol. [The 11 nozzles produced sol droplets 900 to 1500 μ in diameter. A diameter shrinkage factor of 3 occurs from sol droplet to the calcined sphere for a high-density ThO_2-UO_2 product prepared from a 1.64 M (Th + U) sol.] The size of the sol droplet released from a two-fluid nozzle is controlled by the relative flows of sol through the capillary orifice and 2EH in the annulus. Since the sol orifices in this type of nozzle tend to become plugged during long-term operation, the multiple two-fluid nozzle unit is constructed so that it may be taken apart for cleaning when necessary.

Sol Flow Control. — The most satisfactory method for feeding sol in a large-scale system is the displacement of sol by a stream of wet 2EH (Fig. 10). The 2EH is a clean, noncorrosive, self-lubricating fluid that is easily metered with a variable-speed gear pump. A 50- to 150-μ porosity filter removes any large particles from the sol and minimizes plugging of the sol capillaries.

The Sphere-Forming Column. — The column circuit (Fig. 11) used in the study presented here had been used over a period of several years and had proved to be effective for producing microspheres in the 200- to 600-μ-diam (calcined) size range. Haas[6] has discussed the advantages of this design. We believe that this column and all of the equipment in the column circuit can be readily adapted to remote operation.

Throughout the microsphere preparation run, the column was operated with the total flow of 2EH in the bottom divided between the swirl and the upflow. Both the upflow and the swirl flow of 2EH at steady state were 8 liters/min. A holdup time of 30 to 45 min in the column was found to be satisfactory for the production of 250- to 450-μ-diam microspheres.

Gel particle diameter, shape, and surface finish were monitored throughout the operation by periodically making microscopic examinations of the discharged gel product. Adjustments in the column operating

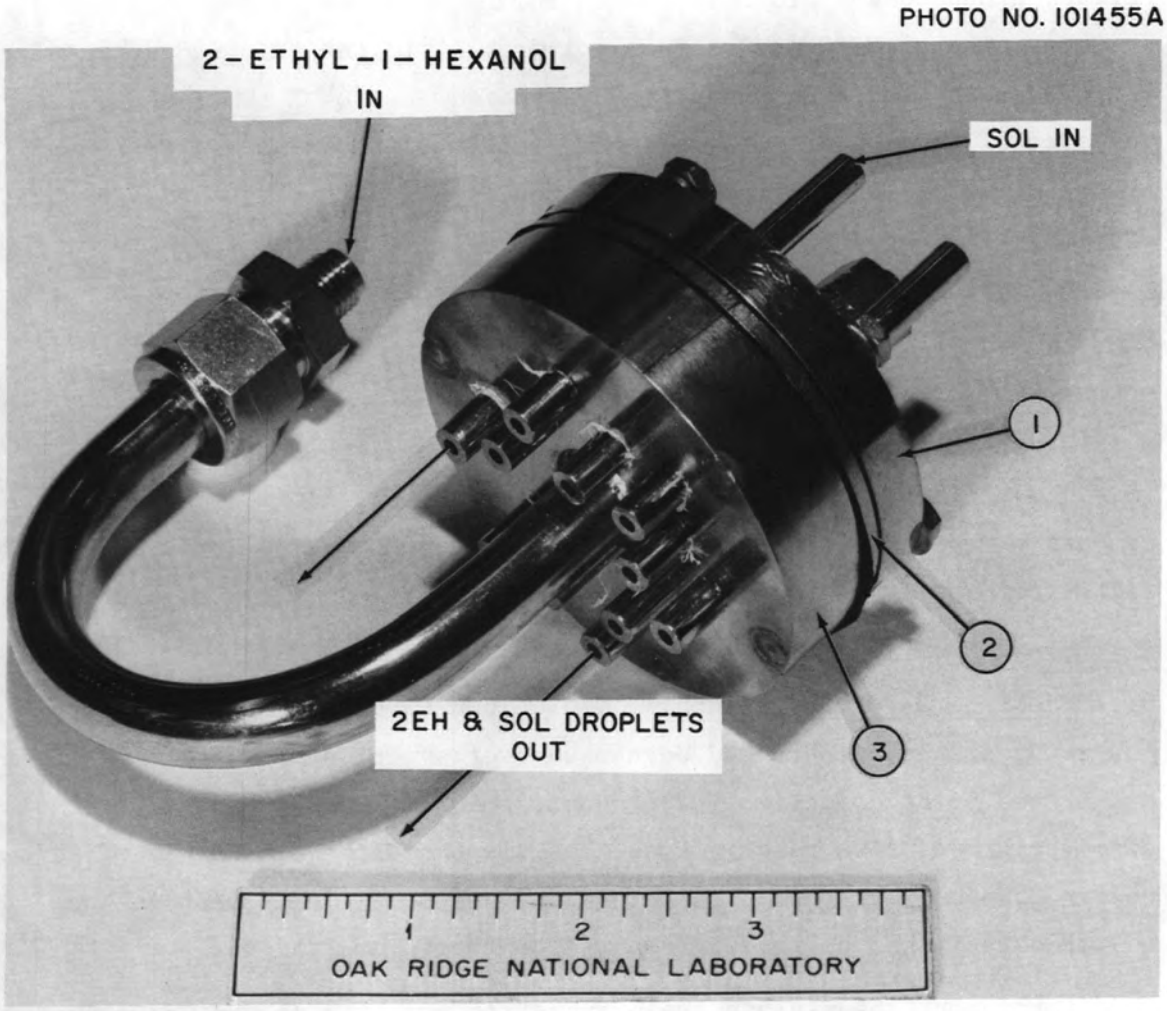

Fig. 8. Multiple Two-Fluid Nozzle Disperser — Assembled.

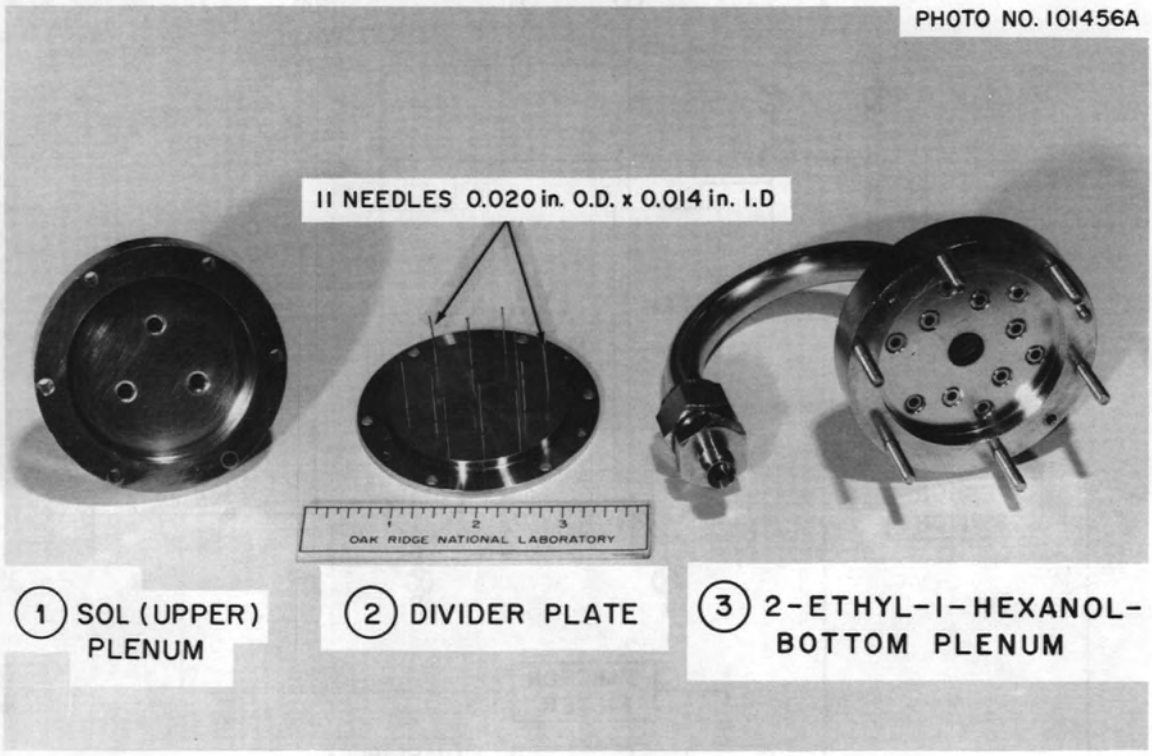

Fig. 9. Multiple Two-Fluid Nozzle Disperser — Dismantled.

ORNL DWG 69-2357R1

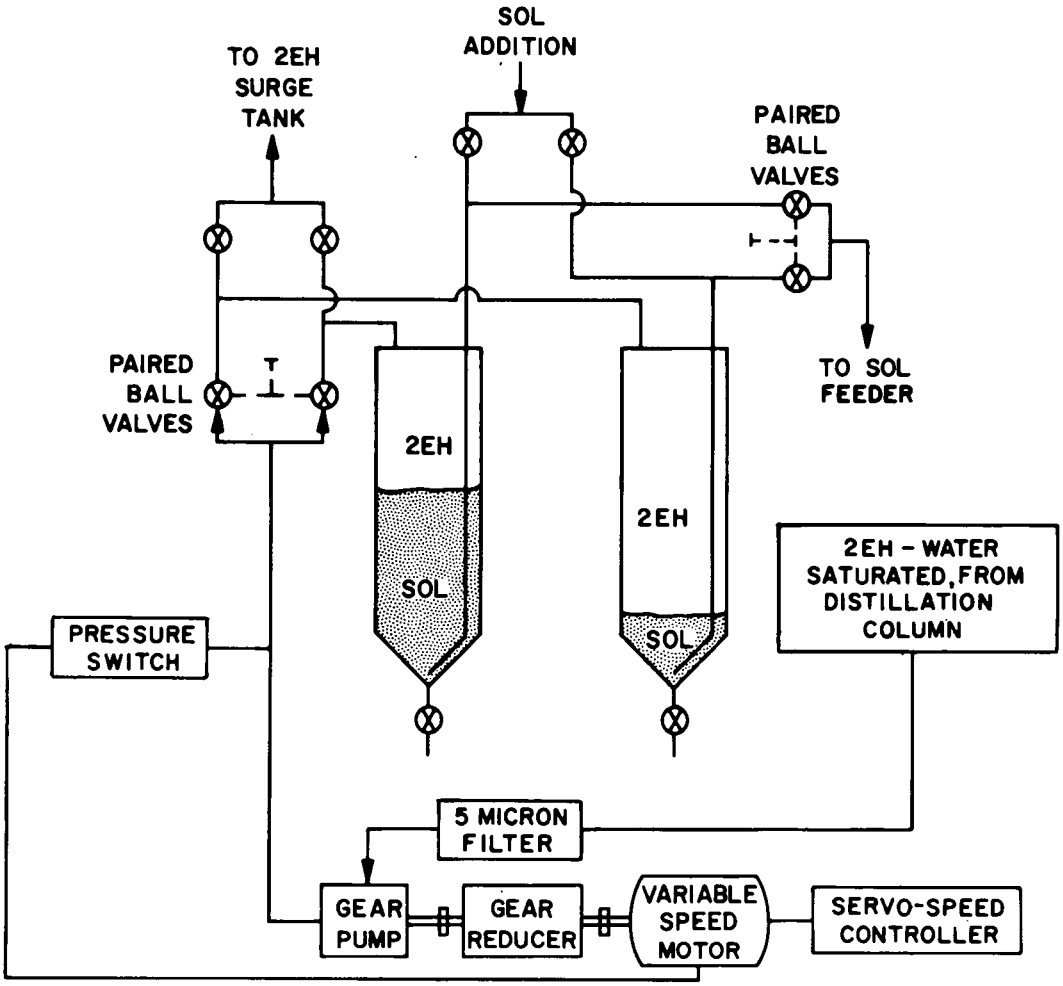

SWITCH TANKS BY REVERSING TWO SETS OF PAIRED BALL VALVES. OTHER VALVES CLOSED EXCEPT FOR ADDING SOL TO TANK WHICH IS NOT ON-STREAM.

Fig. 10. CPDL Sol Feed System Using 2EH Metered by a Gear Pump to Displace Sol.

ORNL DWG 67-6888 R1

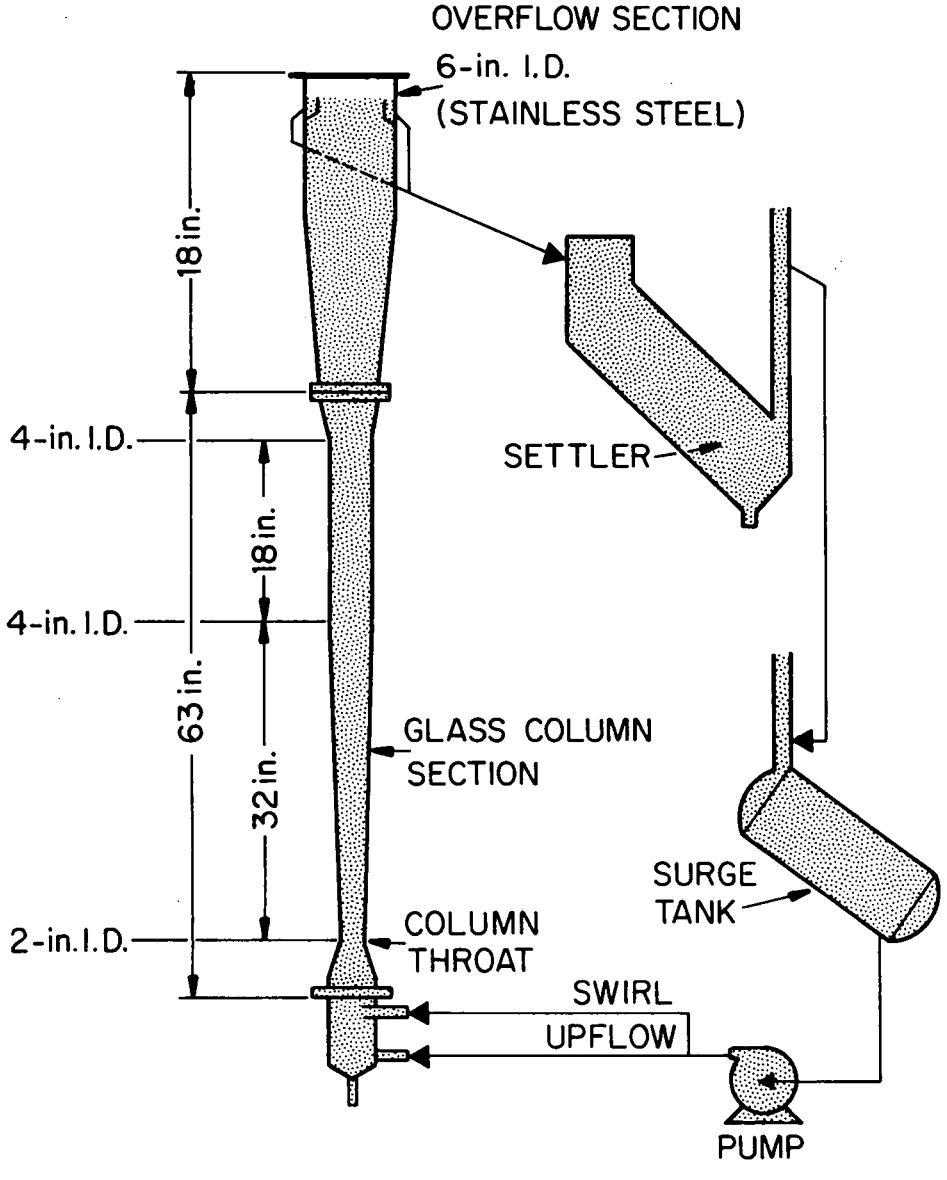

Fig. 11. Configuration of CPDL Microsphere Column.

variables were made on the basis of these examinations. In the event that the mean particle size was off-specification, the 2EH flow to the two-fluid nozzles was adjusted. If the product was distorted (nonspherical), had a poor surface finish, or was cracked, adjustment of the surfactant or water content was required. Undesirable effects such as the coalescence of sol droplets and the sticking of gel particles to each other or to the column walls can be detected immediately by simple visual means; then appropriate measures, based on past experience, can be taken. Since we are cognizant of the effects of many of the 2EH composition variables with regard to product quality, we can generally make the required correction by adding something to, or removing something from, the 2EH.

Settlers. — Settlers are used to remove the fines in the 2EH that overflows from the column and to collect the product microspheres for discharge to the dryer (Fig. 7). It is necessary to remove the fines from the overflow to keep them from being recycled to the column, since this will impair column operation. All of our sol dispersion devices produce small amounts of fines. Although this material constitutes only a very small fraction of the spheres produced (on a weight basis), they impair visibility in the 2EH if they are recycled through the pump and comminuted.

Distillation. — The water content of the 2EH in the column is controlled by the flow rate of 2EH to the distillation unit and by the distillation temperature. A single-stage distillation process is used. A sidestream of the 2EH recirculating in the column is passed through the distillation unit. Subsequently, the relatively dry alcohol returns to the column circuit and is blended with the relatively wet alcohol in the main recirculating stream (see Fig. 7). At steady state, the water input from the sol is equal to the water being removed by the still. The vapor from the still contains both water and 2EH. Upon cooling, the condensed vapor passes into a phase separator, where the water is decanted to a waste drain and the used 2EH is returned to the system inventory. The loss of 2EH to the waste drain is small because of the low solubility of 2EH (0.1 vol %) in water. The desired water content (1 vol %) was maintained throughout our demonstration runs by using a 2EH flow rate of 4 liters/min through the still at 150°C.

Since the rate at which surfactants react with nitric acid increases with increasing temperature, the still is operated at the lowest practical temperature. We have found temperatures above 155°C to be undesirable. The still, constructed of stainless steel tube-and-shell heat exchangers, is heated with steam.

Pump for Circulating Liquids. — A single canned-rotor pump is used to circulate the 2EH in the entire pilot plant. Distribution is made from a single manifold, which provides 2EH for: (1) the multiple two-fluid nozzles, (2) fluidization of the column, (3) the distillation system in-line instrumentation, and (4) driving the jet that hydraulically transfers the microspheres to the dryer. A Chempump (Model GA) equipped with Alundum bearings and tungsten carbide-coated journals has served in this capacity for 2400 hr without incident.

The most satisfactory sol feed pump that we have used is a Zenith gear pump, Type B. This pump transfers wet 2EH into a displacement tank, thereby forcing sol into the sol feeder. A speed-controlled (servo) dc motor drives the pump. We have operated one of these pumps for 1650 hr; only one chargeable shutdown has been necessary.

Hydraulic Transfer of Gel Microspheres. — The gel microspheres are hydraulically transferred to a settler, from which they fall to the dryer by gravity (see Fig. 7). The microspheres rest on a Dutch twill-weave, stainless steel screen in the dryer. The 2EH overflows the settler and returns, via gravity, to the sphere-forming system. When the dryer becomes filled with microspheres, the stream containing the microspheres is switched to another dryer for filling. The 2EH is then drained out the bottom of the first dryer, and the drying cycle is started. The jet used in our demonstration study was a "Rated Jet," manufactured to our specifications by Penberthy*.

In-Line Instrumentation. — The equipment described below was installed to monitor process streams during the first campaign.

(1) A one-stage mixer-settler was included to obtain pH readings. A sidestream of alcohol was metered to the mixer-settler and contacted with an equal volume of demineralized water. The phases were then

*A division of Houdaille Industries, Inc., Prophetstown, Ill.

separated; the 2EH was returned to the system, and the water layer was diverted to the "hot" drain. The pH of the water layer was recorded. The pH of the same water stream was spot-checked in campaign 2.

(2) A conductivity cell was inserted in the line that conducted the water layer from the decanter to the hot drain. The conductivity of the condensate was recorded.

(3) An in-line, atmospheric-pressure, boiling-point still was installed for determining the water content of the recycle 2EH.

3.1.2 Results

The sphere-forming column was used in two five-day campaigns, instead of one 10-day campaign, because of inadequate drying equipment (see Sect. 3.2). Our operation of this column proceeded smoothly throughout both campaigns, and ThO_2-UO_3 gel spheres were produced at the rate of about 11.5 kg of (Th + U) per day in each case. We experienced only two forced shutdowns of the sphere-forming equipment. Both of these occurred during the second campaign and resulted in the loss of about 4 hr of operating time each time. Neither of the shutdowns was caused by failures of equipment or controls unique to the sol-gel sphere preparation process. The first shutdown was caused by the failure of the control valve that maintained the fluidizing flow in the sphere-forming column. The second was caused by an interruption in electrical power service to the building.

Operation of the Column in the First Campaign. — The operation of the column and its auxiliaries was satisfactory for the entire five-day period. Good-quality microspheres were produced. Some difficulty was encountered in surfactant control during the startup period, as evidenced by minor clustering in the column. This was corrected by adding 50 ml of Span 80 and 5 ml of Ethomeen S/15 at 2-hr intervals over the first 36 hr of operation. Another problem, the accumulation of an undesirable quantity of oxide fines in the column, was also corrected by replacing a malfunctioning two-fluid nozzle disperser with a new one. Following these two adjustments, column operation was satisfactory in all respects.

The Ethomeen S/15 and Span 80 concentrations at the beginning of the operation were 0.1 vol % each (Fig. 12). The water content was 1 vol % (Fig. 13). Clustering was prevented by adding Span 80 every 2 hr in amounts equivalent to 0.02 vol % (i.e., a 50-ml addition). Subsequently, Ethomeen S/15 was added only when microscopic examination revealed "frosted" surfaces or when "ellipsoidal microspheres" appeared in the product. By the end of the campaign, Span 80 and Ethomeen S/15 had been added to give final concentrations of 1.5 and 0.25 vol % respectively.

We believe that our five-day operation could have been extended to the full 10-day period and that it would have yielded good-quality product. However, the severe cracking of product caused by the drying equipment prevented us from making adequate quantitative evaluations of the product and testing our calciner design concept. For this reason, we decided to cease operation after five days and to resume operation when an adequate fixed-bed dryer became available.

Obviously, there is a limit to the time that a sphere-forming system may be operated using the type of surfactant control described above. The addition of Span 80 (0.24 vol % per day) and the presence of impurities resulting from reactions in the still are certain to cause some adverse effects eventually. For example, a 50-day sustained operation would have resulted in an increase in the impurity level to about 10 vol % from the added surfactants alone. Eventually, changes in boiling point, viscosity, and rate of water extraction from the sol would make operation either very difficult or impossible and the solvent would have to be replaced. For this reason, a "purge system" of surfactant control was tested during the second campaign.

The water content of the 2EH in the column was remarkably constant throughout the campaign. Infrared absorption at 1645 cm^{-1} showed that it was maintained between 0.95 and 1.00 vol % for essentially the entire run (Fig. 13).[13] The sharp decrease in water content during the first 1-1/2 hr of operation corresponds to a calculated 1 hr needed to achieve 95% of equilibrium (based upon system volume and still feed rate). The in-line boiling-point instrument gave essentially constant-temperature readings after the first 55 hr of operation. This instrument should prove

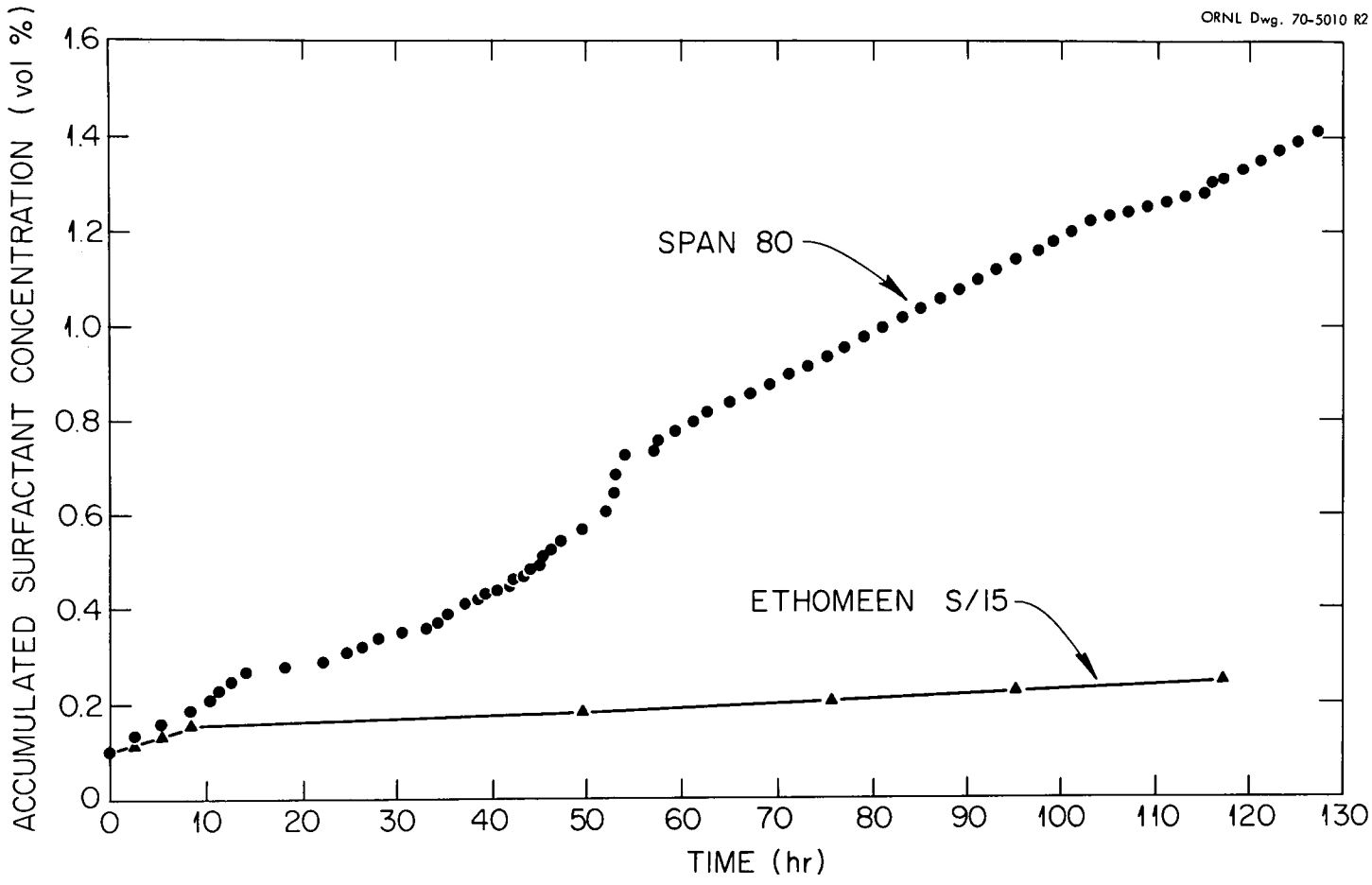

Fig. 12. Addition of Surfactants in First Five-Day Campaign.

ORNL Dwg. 70-5009 R1

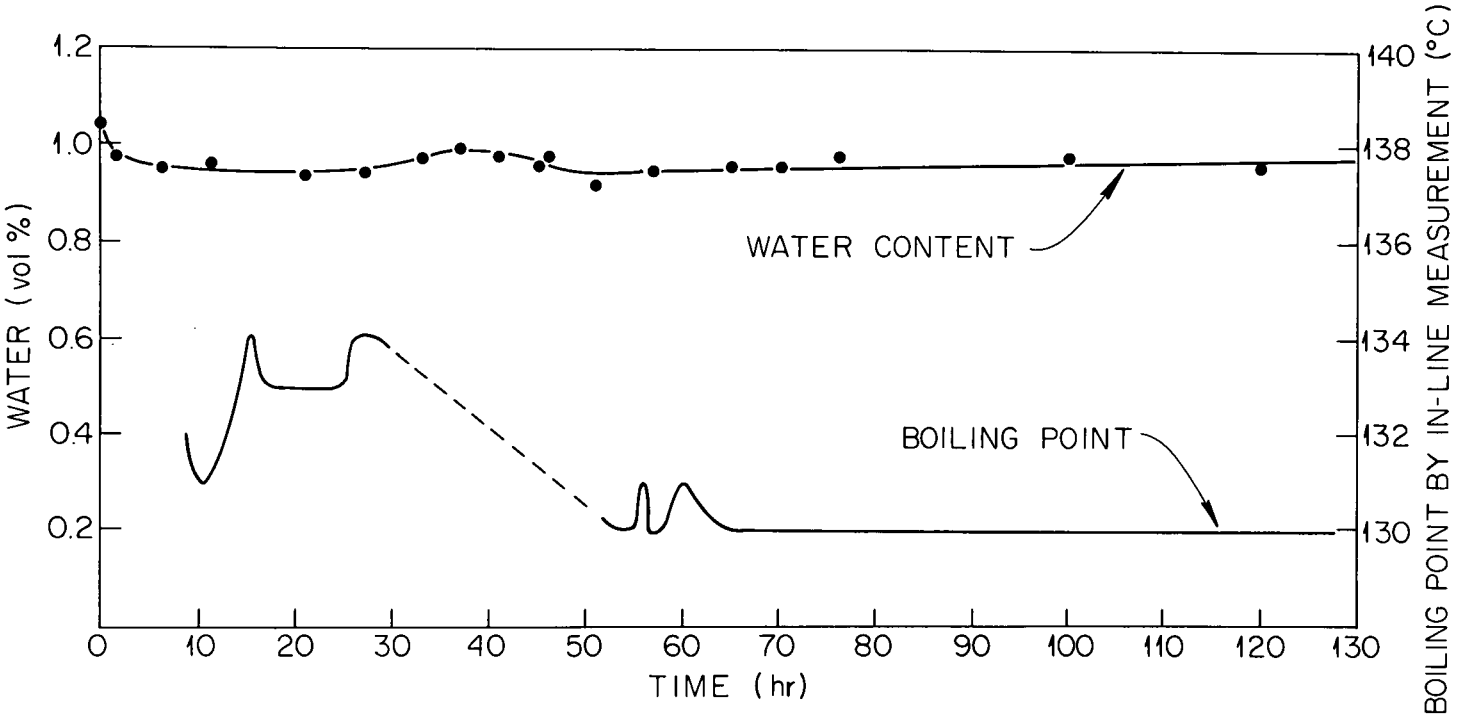

Fig. 13. Control of Water Content of Sphere-Forming Alcohol in First Five-Day Campaign.

useful under sustained operation. Analysis for water by the Karl-Fischer method gave consistently lower values by about 0.05 to 0.1 vol % than the infrared method but showed the same relative trends with time. We believe that the infrared method is the more reliable of the two analyses.

The condensate from the still and the recycled 2EH were sampled and analyzed periodically. A complete listing of the data that were obtained are presented in Tables 12 and 13. Only a summary is given below (the values are approximate averages):

Condensate-Water

Conductivity	10^{-4} mho
pH	3.9
Total solids	18 ppm
NO_3^- conc.	4 mg/liter
Alcohol (2EH) conc.	1 ml/liter

Recycle Alcohol

pH of water layer (2EH shaken with equal volume of water)	4.4
pH of alcohol (electrodes immersed directly in 2EH sample)	6.5
Total solids content	0.3 g/liter
NO_3^- conc.	7 mg/liter
Amine conc.	<0.001 M
Water conc.	0.7 vol %

There was no change in the Th/U atom ratio during the microsphere preparation campaigns.

Operation of the Column in the Second Campaign. — Operation of the sphere-forming column was completely satisfactory throughout the second campaign. Two methods for surfactant control, continuous purge and batch-wise additions, were used in this test. The continuous method was used

for a total of 33 hr. During the remainder of the run (78 hr), the batch addition method was used. Satisfactory product was produced in each case. The 33 hr during which the continuous method was used was divided into three operating periods: 18, 7, and 8 hr.

The feeding of the specification-quality batch of sol (EV-36) was completed in 78 hr (Fig. 14). After a 5-hr shutdown to permit equipment cleanout, operation was resumed with sol EV-38, which had a significantly lower Th/U atom ratio (3 vs 4.25). Good-quality microspheres were produced throughout the 20-hr operation with the second sol; the batch addition method of surfactant control was used.

The surfactant concentration curves for several of the operating periods (shown in Fig. 14) were smoothed in order to show the total accumulated volume percent (tav/o) of surfactants. We deliberately began the second campaign with an Ethomeen S/15 concentration that was higher than necessary; as a result, practically no additional Ethomeen S/15 was required during the sphere-forming operation with the EV-36 sol. Use of the higher initial Span 80 concentration was based upon our experience in the first campaign. (Note that we were almost exclusively concerned with Span 80 control; when "surfactant" data are described, they deal with this surfactant unless otherwise indicated.) Since two methods of surfactant control were used, the operations are best discussed in the order in which they were performed.

In the first 18 hr of the operation, we continuously added 2EH to the column while continuously withdrawing an equal volume of organic from the system. Surfactants were added simultaneously with the new 2EH in such quantities as were required to maintain the concentration of the entering organic stream equal to that of the system inventory. Thus the surfactant concentration could be held constant. An arbitrary addition rate of 10 liters of 2EH per hour, which provided a displacement of the total solvent inventory (245 liters) every 24 hr, was selected.

The purpose of this test was to demonstrate the operability of a constant-concentration surfactant flowsheet. Degradation products would slowly accumulate, essentially reaching an equilibrium concentration after

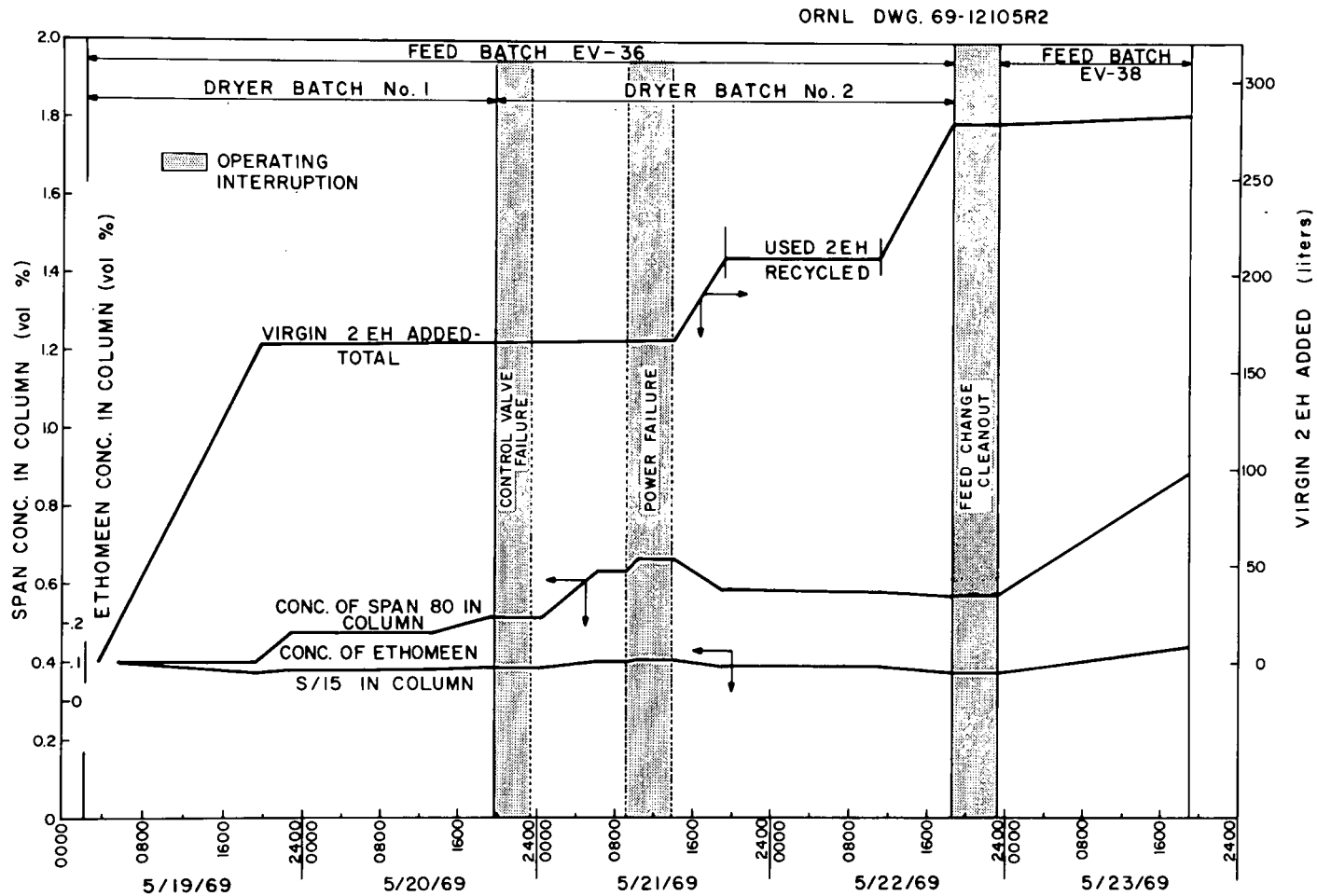

Fig. 14. Operating History of the Sphere-Forming Column During the Second Campaign.

a three-day period. Our principal concern was that the "fresh" alcohol thus entering the system might cause poor sphere forming in the column. However, particle size, shape, and surface characteristics were excellent. No clustering was observed. We conclude that any objections to the use of "fresh" 2EH are unfounded and that "aging" of the alcohol in a system such as the one we used probably will not be required.

The arrangement used for the continuous surfactant method simulates a system in which a sidestream of the organic is removed continuously, purified, mixed with the proper amounts of surfactants, and returned for reuse. This step, including water removal, is already a part of the system. Such an arrangement, which limits the buildup of impurities to a three-day accumulation, is capable of providing continuous, long-term operation. In the first campaign, we demonstrated successful operation for five days during which waste products and surfactants accumulated. It, therefore, seems likely that a system that could hold the concentrations of surfactants and waste products to the limits described could be operated indefinitely. Future work will be confined to this mode of operation.

After 18 hr of operation by continuous surfactant addition, and prior to the startup following the power failure, we returned to the batch addition mode. In this scheme, surfactant is added only when the operator sees evidences of incipient clustering in the column or observes (under the microscope) that nonspherical product is being produced. Such a system has the weakness that incipient clustering is a subjective judgement and hence subject to error. This was amply demonstrated by the following observations:

The sharp increase (from 0.4 vol % to a 0.475 total accumulated vol % of Span 80) in surfactant concentration that occurred at the beginning of the batch addition period was due to manual addition of surfactant. It is questionable that this addition was necessary since the column had operated satisfactorily up to this point and no additions were made in the following 14 hr in which the column operated satisfactorily.

As a result of the control valve failure at the time that the product from dryer batch 2 was beginning to be collected, some agglomerated, undried beads fell into the microsphere transfer jet. These large particles, which

were not removed during the subsequent shutdown, made operation of the jet erratic. It plugged frequently and would transfer the product to the dryer only with frequent backflushing. The operator mistakenly attributed this difficulty to clustering in the column. Accordingly, Span 80 was added, increasing the concentration from 0.475 to 0.66 tav/o.

The above increase in Span 80 concentration was shown to be unnecessary later. Following the power failure, the jet was cleaned thoroughly, and the remainder of the first drum of 2EH was pumped into the system at the rate of 10 liters/hr. No surfactants were added during this period. The resultant drop in surfactant concentration (to 0.59 tav/o) did not affect column operations.

The waste 2EH from the constant-surfactant-concentration period of the test was pumped back into the column at 10 liters/hr, with constant overflow. A small amount of surfactant was added during this operation, and the concentration finally reached 0.62 tav/o. Good column control was experienced. No effect of accumulated waste products or the slightly higher surfactant concentration could be found.

Finally, fresh alcohol and surfactant additions were started and were continued until the EV-36 feed batch was exhausted. Column control, as well as the quality of the product, remained satisfactory until shutdown.

After cleanout and subsequent startup procedures were completed, we initiated operation with feed batch EV-38.

EV-38 was used for "fill-in" purposes in order to extend the operation of the column for the full five-day period. Column control and microsphere quality were good. A sol with a Th/U atom ratio of 3 requires sharply higher Span 80/Ethomeen S/15 concentrations than does a sol with a Th/U atom ratio of 4.25. Accordingly, additions of both of the surfactants were made during the EV-38 feeding period, as shown in Fig. 14. On being dried, fired, and examined optically, the microspheres of EV-38 origin appeared to be equivalent to EV-36 product; however, we did not obtain data on their properties.

3.2 Drying

In the first campaign, we attempted to use the two dryers remaining from previous thoria microsphere operations. Each of these dryers had a capacity of 20 kg of microspheres. A complete dryer turnaround every 48 hr was necessary in order to keep pace with a continuously operating column producing 10 kg of product per day. We found the dryers to be inoperable within this time requirement. In our attempts to dry four batches of microspheres collected in the campaign, we experienced temperature excursions that caused excessive shattering of the gel spheres. Breakage ranged from 100% in the first batch to about 50% in the fourth batch. Because the design of the dryers was basically inadequate and could not be altered to meet our needs, we decided to discard the existing drying equipment. After designing, constructing, and installing a new fixed-bed dryer of suitable design, we were able to dry the spheres in the second campaign in a satisfactory manner. This dryer, shown in Figs. 15 and 16, is based on the same concept as the previous dryers but offers significant improvement insofar as heat distribution and instrumentation are concerned.

3.2.1 Process Description

The microspheres that are collected by the settler from the 2EH transfer stream fall through the bottom of the settler into the dryer (Fig. 7). The excess 2EH of the transfer stream overflows the settler and returns to the column. When the dryer is filled with microspheres, the 2EH that has been standing in the dryer can be drained through the stainless steel cloth at the bottom. The microspheres are then dried under an argon-steam purge to 200-225°C, with the gases flowing downward through the bed. The 2EH in contact with the outside surfaces of the spheres is rapidly removed, but the sorbed liquid in the 20- to 30-A-diam pores of the gel spheres is removed very slowly.

A steam atmosphere is used as the purge gas in the drying operation because it is effective in removing imbibed and sorbed organic materials and suppressing exothermic reactions.[14] Exothermic reactions of a magnitude sufficient to cause excessive breakage of the spheres occur even with steam if a uniform temperature is not maintained throughout fixed beds of spheres.

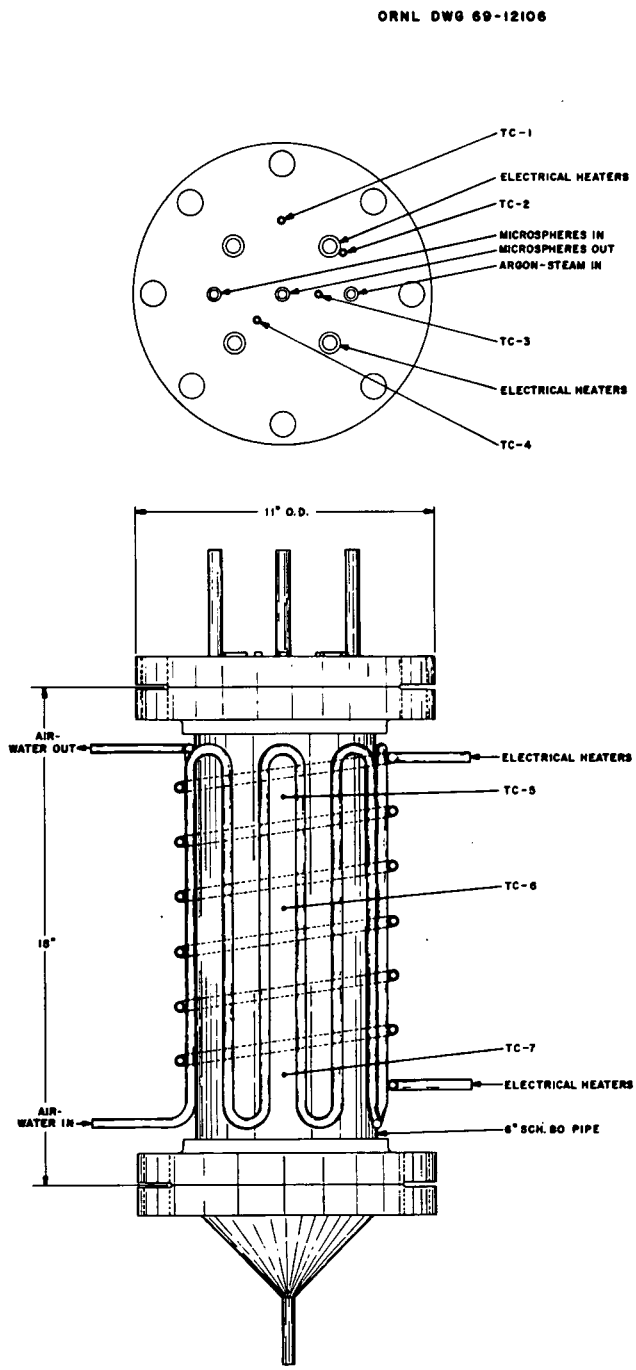

Fig. 15. Exterior View of the Improved Microsphere Dryer Used in the Second Campaign.

ORNL DWG 69-12117R

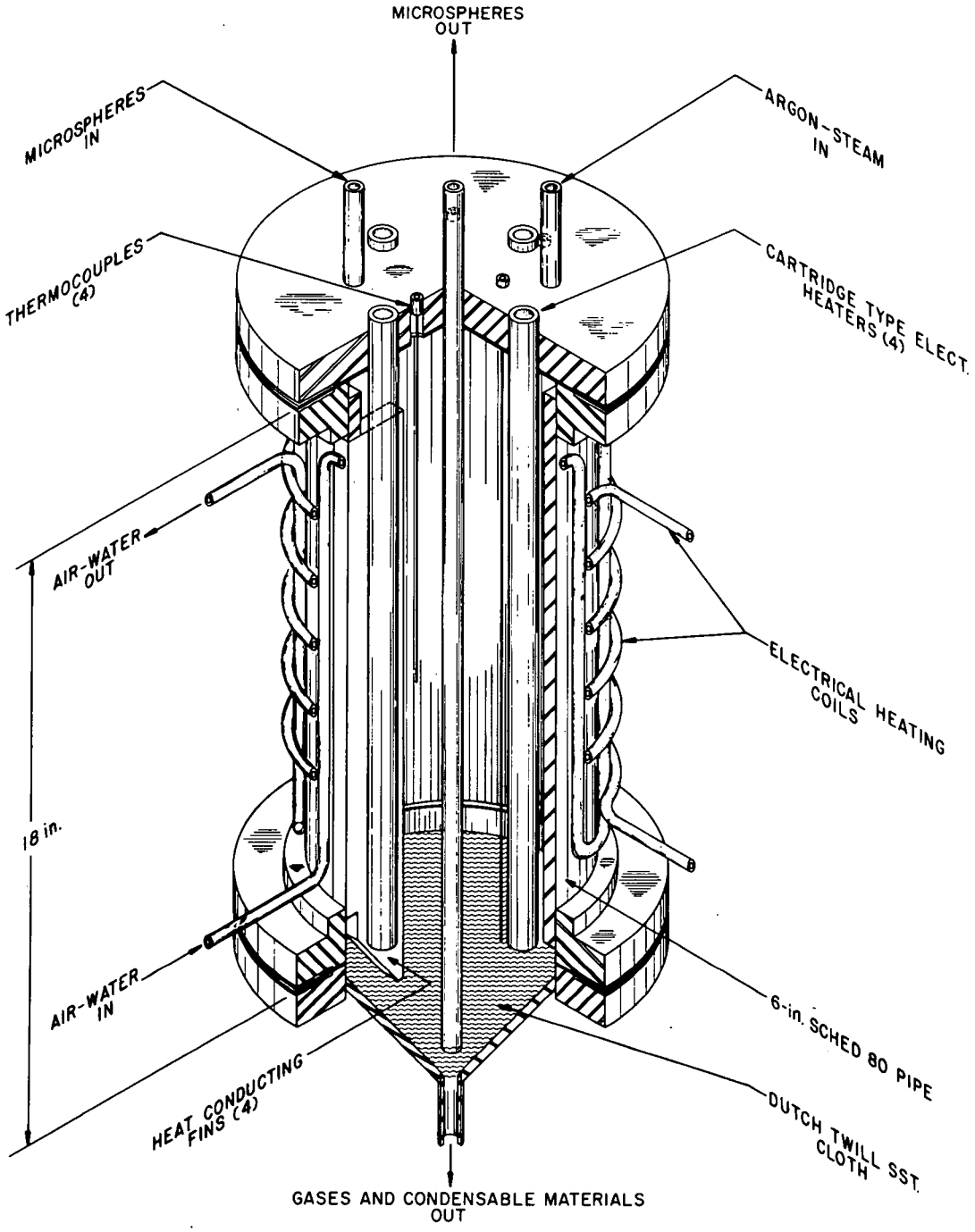

Fig. 16. Internal Arrangement of the Improved Microsphere Dryer Used in the Second Campaign.

Some types of oxide spheres are more prone to exothermic reaction than others; for example, exothermic reactions are far more easily initiated with ThO_2-UO_3 spheres than with ThO_2 spheres.

The features of the new design are described below. Similarities to and/or differences from the old design are noted.

(1) The new dryer was built of 6-in. sched 80 pipe, whereas the earlier version was built of sched 10 pipe. The thickness of the conical bottom in the new dryer was thereby increased from 1/16 in. to 3/8 in. This increase in thickness was made to improve heat distribution peripherally and longitudinally.

(2) The same type of heat-conducting, internal fins was used in both models.

(3) A 3/8-in. tube was continuously welded to the outer surface of the dryer shell in the new model. Coolants (air and water) were connected to this coil. With this feature we found that we were actually able to quench an excursion within the dryer.

(4) Tubular electrical heaters were wound in a helical pattern around the outside of the coolant tube. Metal-to-metal contact between the heaters and the shell was thus avoided since the heaters only had point contact with the outer wall of the cooling coil. The resulting poor heat transfer from heater to shell precluded hot spots and permitted heat absorbed by the shell to be transmitted uniformly. In the older models, flat heating elements were tack-welded against the outside of the shell at the base of each heating fin. This localized heat source and direct contact between heaters and shell led to the formation of hot spots at the base of the fins, and were responsible for poor dryer operation in the first campaign.

(5) In the new dryer, four additional tubular heaters were installed in wells extending down from the cover plate.

These wells were located in the centroid of each of the areas bounded by the inner dryer wall and the two heat conducting fins. They extended to within 1/2 in. of the bottom of the dryer. In this way, heat could be supplied to the center of large volumes of microspheres which were previously remote from any heat source.

(6) Thermocouples were welded directly both to the dryer shell and to one of the tubular heater wells in order to improve temperature measurement response. Bed temperatures were obtained from thermocouples located at the center of the bed, the inner wall of the shell, and in the corner between one of the heating fins and the inner wall of the dryer. With this arrangement, the difference in temperature between the hottest and coldest points did not exceed 8°C in either of the two batches of microspheres that we dried.

Rather than incur the expense of constructing and operating two dryers of the new design, we decided to build only one and to provide an off-line settling tank for collecting the second batch of microspheres while the first batch was being dried. On completion of the first drying cycle, the microspheres in the settling tank were rapidly transferred by vacuum into the dryer. Continuous operation was thus maintained by using these two pieces of equipment. Such a scheme should be considered for remote operation since it would abolish the need for a second dryer installation.

In order to achieve satisfactory drying, we used the schedule shown in Fig. 17. This schedule was developed for drying 2-in.-diam beds in the laboratory. The temperature of the control bed does not lag behind the temperature of the heat-transfer surfaces by more than 10°C at any time during the periods of temperature increase. The temperature of the central bed attains that of the wall during the soaking periods (i.e., when a purge of steam is eluting the organics).

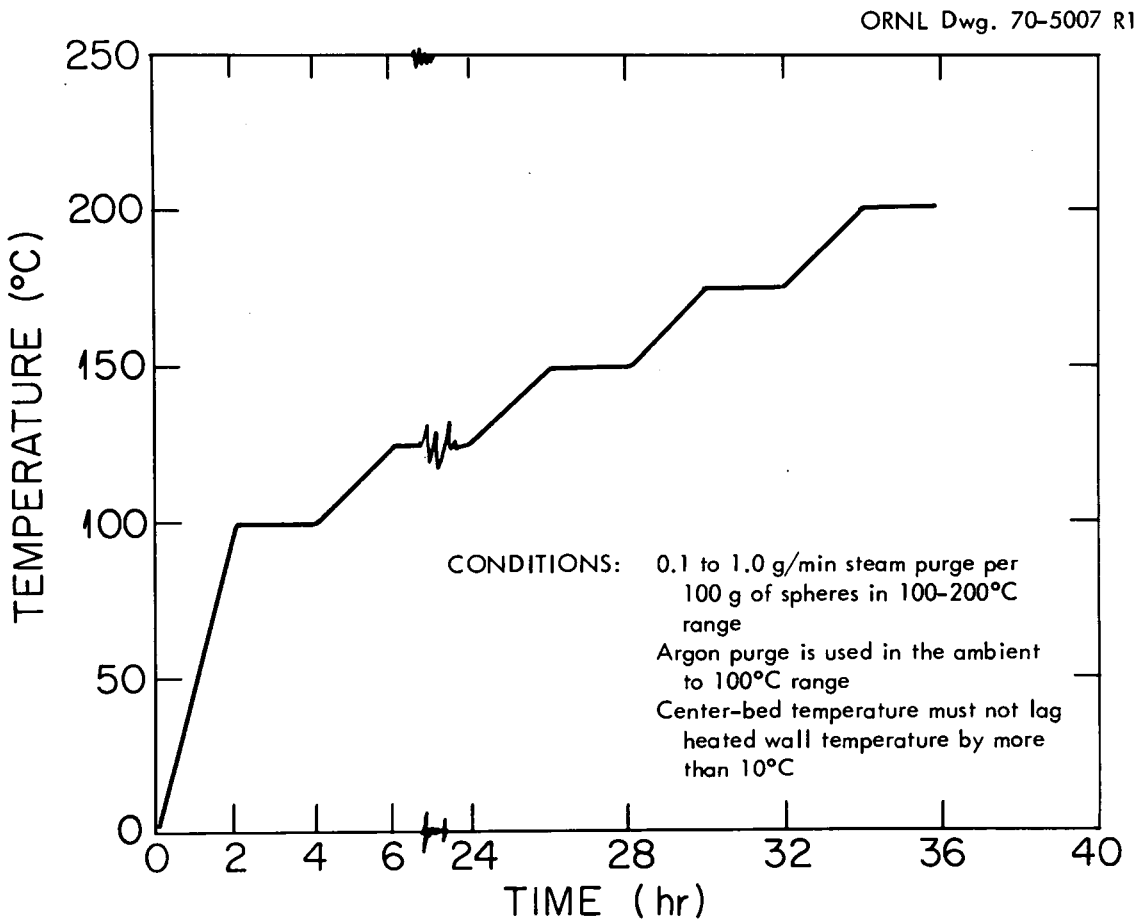

Fig. 17. Schedule for Drying ThO_2–UO_3 Microspheres in a 2-in.-diam Bed.

3.2.2 Laboratory Support Studies

In laboratory support studies aimed at solving the problem of microsphere breakage during drying, we found that the ThO_2-UO_3 microspheres prepared in these studies were much more susceptible to exothermic reactions than those prepared in earlier development work. The problem was even more severe for the larger batches since the equipment could not dissipate the greater quantities of liberated heat. Neither effect had been observed in an earlier small-scale (5-kg) run in which gel microspheres with a higher uranium content (Th/U atom ratio = 3) were dried. An exothermic reaction occurs between the nitrate ion present in the original sol and the organic liquids sorbed by gel microspheres in the sphere-forming process. Two methods of preventing this exothermic reaction were investigated: (1) removal of the sorbed organics by drying (soaking) in steam at successive temperature plateaus and slowly increasing the temperature between plateaus, and (2) removal of nitrate ion by washing the spheres in NH_4OH. Samples were obtained each day from the sphere-forming column for these studies.

Our studies showed that the microspheres could be successfully dried by using the appropriate drying rate in steam and maintaining uniform heating throughout the bed. No further breakage occurred during the subsequent firing to 1150°C. Washing with NH_4OH prior to calcination prevented breakage in some of the samples but caused about 50% breakage in most of them. Adjusting the NH_4OH concentration and/or the NH_4NO_3 content of the washing solution did not reduce the breakage.

Steam Drying. — Results for the first samples (Th/U atom ratio = 4.25) obtained from the CPDL demonstration run showed that longer soaking times in steam were required than had been necessary for gel microspheres of higher uranium content (Th/U atom ratio = 3). Slower rates for increasing the temperature between the different soaking plateaus were also found to be desirable. Exothermic reactions that resulted in significant breakage occurred when the gel microspheres were dried in 2-in.-diam fixed beds at an increase rate of 25°C/hr (at the dryer wall). With this rate, the central bed temperature lagged the wall temperature by 20°C during the soaking periods. Exothermic reactions occurred at 190 to 200°C and

caused significant breakage of the microspheres during the almost instantaneous temperature rise to 240°C. Introduction of a 6-hr soaking in steam at 120°C prevented this exothermic reaction, as did 2 hr of soaking at 120°C followed by 16 hr of soaking at 180°C (Table 4). The fact that the nitrate-to-metal ratio is substantially decreased by the process from an initial value of 0.1 to as low as 0.003 indicates that the nitrate reacts slowly during the soaking process. Conductivity measurements of the effluent steam after condensation show that a conducting electrolyte was liberated throughout the drying. This electrolyte, possibly NO or NO_2, dissolved in the condensate. The conductivity measurements indicated that the reaction is initiated below 125°C and continues thereafter. For example, the conductivity of the water collected after 125°C was 150 micromhos/cm; the conductivity of that collected after 200°C was 250 micromhos/cm. It, therefore, was advisable to carry out the drying by using slow temperature rise rates in the 100-200°C region. In this way, organic materials could be removed both by displacement with steam and by reaction with the nitrate ion. With this method of drying, "runaway" reactions between nitrate and the organics could be prevented.

In subsequent steam drying operations, in which we used soaking periods at 110, 125, 150, 175, and 200°C (Table 5), detectable exothermic reactions were not observed. No breakage of spherical particles resulted. The 16-hr soaking period was used at some of the temperatures because it was convenient to carry out this stage of the drying overnight and resume drying the following day. Again, we observed that the nitrate ion was being consumed during the drying; however, the rates of drying were such that the reaction of the nitrate was controlled. After being dried to 200°C in this manner, the microspheres could be fired to 1100-1200°C, at rates of 300°C/hr, without breakage. Steam flow rates as low as 0.1 g per minute per 100 g of wet gel were effective in preventing exothermic reactions. Addition of air to the 100-g fixed beds after the 200°C drying caused the remaining carbon-bearing materials to begin reacting at 160 to 180°C. When air was admitted at 125 cc/min, temperature increase rates of 100°C/hr occurred as a result of this reaction.

Table 4. Results of Preliminary Studies of the Drying of ThO_2-UO_3 Gel Microspheres[a] in a 2-in.-diam Bed

Drying conditions: 50°C/hr in argon to 100-110°C
100-110°C for 2-3 hr
25°C/hr in steam (1 g/min) to 200°C

Sample Number	Additional Steam Soaking	Exothermic Reaction	Exothermic Reaction Initiation Temp. (°C)	Analysis of Dried Gel			
				O/U Atom Ratio[b]	$\frac{NO_3^-}{Th + U}$ Mole Ratio	NO_3^- Content (%)	C Content (%)
1-23-69	None	Yes	200	2.96	0.005	0.10	0.42
1-25-69	None	Yes	190	2.78	0.002	0.04	1.01
1-26-69	6 hr, 120°C	No	—	2.95	0.024	0.50	0.99
1-24-69	2 hr, 120°C; 16 hr, 180°C	No	—	2.94	0.003	0.07	0.49

[a]A total of 200 g of wet microspheres; initial $NO_3^-/(Th + U)$ mole ratio = 0.105.

[b]Samples were exposed to air when the vessel was unloaded after drying.

Table 5. Effects of Soaking Times at Various Temperatures on Steam Drying of ThO_2-UO_3 Gel Spheres

Conditions: Initial NO_3^-/(Th + U) mole ratio of gel spheres = 0.105

100-g samples heated to 100-110°C in argon (0.7 std ft^3/hr) at 50°C/hr

Steam flow rate was 1 g/min, and the temperature rise rate was 25°C/hr between holding temperatures

	Sample							
	1-26-69	1-26-69	1-27-69	1-27-69	GB	GB[a]	GB	GB
	Soaking Time (hr)							
Holding temperature, °C								
110	2	16	2	2	3.5	3.5	16	16
125	2	0	16	2	16	16	0	2
150	16	2	2	16	1	1	2.5	16
175	13	16	3	3	2.5	2.5	16	2
200	2.5	4	2	3	2	2	4	3
	Analysis of Dried Gel							
NO_3^-/(Th + U) mole ratio	0.024	0.025	0.009	0.022	0.006	0.005	0.008	0.027
NO_3^- content, %	0.54	0.56	0.20	0.48	0.14	0.11	0.17	0.60
C content, %	1.14	0.92	0.73	0.85	0.96	1.99	0.76	0.97
O/U atom ratio	2.95[b]	2.81	2.93[b]	2.93[b]	2.96	2.72	2.84	2.94

[a] 0.1 g/min used instead of usual 1 g/min.

[b] Samples were exposed to air during the unloading step after firing.

In the second campaign, the schedule shown in Table 5 was modified as follows for 100-g samples in the 2-in.-diam bed:

(1) Heat at 25°C/hr to 110°C in argon (1 std ft^3/hr)
(2) Hold at 110°C for 2 hr in steam (1 g/min)
(3) Heat at 25°C/hr to 150°C and hold 16 hr in steam (1 g/min)
(4) Heat at 25°C/hr to 200°C and hold 2 hr in steam (1 g/min)
(5) Cool under argon

There were no exotherms observed during drying for any of the samples obtained during the five days of operation. No further cracking occurred when the dried samples were fired to 1100°C. The yield of good-quality product after drying at 200°C in steam and after firing at 1100°C was determined by the Metals and Ceramics Division with a roundometer (Table 6). The samples were not screened before the roundness test. Microscopic examination of the spheres before and after the drying and firing revealed little, if any, breakage that occurred as a result of the drying and firing procedure.

Removal of Nitrate Ion with Ammonium Hydroxide. — Washing the gel microspheres with NH_4OH at room temperature was found to be very effective for removing nitrate. However, the washing caused spalling and cracking of the gel in most of the samples. In most of the studies, 6 M NH_4OH was used. There was no apparent decrease in cracking and spalling when the concentration was changed to 0.1, 1.0, or 15 M, or when NH_4NO_3 was added to the NH_4OH prior to washing.

The method of washing consisted in recirculating NH_4OH solutions through fixed beds of wet gel microspheres. The conductivity of the recirculating aqueous liquid was continuously measured to follow the nitrate removal. The nitrate ion was rapidly washed out by the NH_4OH solutions, as shown by conductivity measurements (Fig. 18). After the first washing, the microspheres contained 400 ppm of nitrate (NO_3^-/Th + U mole ratio = 0.002); a second wash reduced the value to 40-60 ppm. After being washed with NH_4OH and dried at room temperature in argon, the microspheres still contained sorbed organics at a concentration of 3 to 6% as total carbon. The dried microspheres could be fired without further cracking.

Table 6. Yield of Gel Microspheres Obtained in Steam Drying and in NH_4OH Washing

Gel Sphere Preparation No.	6 M NH_4OH Wash	Yield (%) of Good-Quality Product[a]		
		Dried in Argon at Room Temp.	Dried in Steam[b] to 200°C	Fired to 1100°C After Steam Drying to 200°C
0740-5/19	No	-	97.9	98.8
	Yes	54.9	56.0	55.3
0700-5/20	No	-	97.7	98.6
	Yes	33.8	32.4	39.8
0700-5/21	No	-	98.8	98.9
	Yes	50.9	48.9	56.9
0700-5/22	No	-	94.5	97.04
	Yes	55.27	49.4	55.33
0700-5/23[c]	No	-	96.2	96.4
	Yes	85.4	84.8	87.5
2130-5/23[c]	No	-	97.1	96.8
	Yes	94.0	95.1	94.4

[a]Yields were obtained by the Metals and Ceramics Division by separating nonspherical particles on a roundometer.

[b]Samples that had not been washed with 6 M NH_4OH were dried by the method given on page 49. The samples that had been washed in 6 M NH_4OH were heated in steam to 200°C at 25°C/hr after being heated in argon to 110°C.

[c]These gel spheres had a Th/U atom ratio of 3, whereas the other spheres had a Th/U atom ratio of 4.25.

ORNL DWG 70-14722

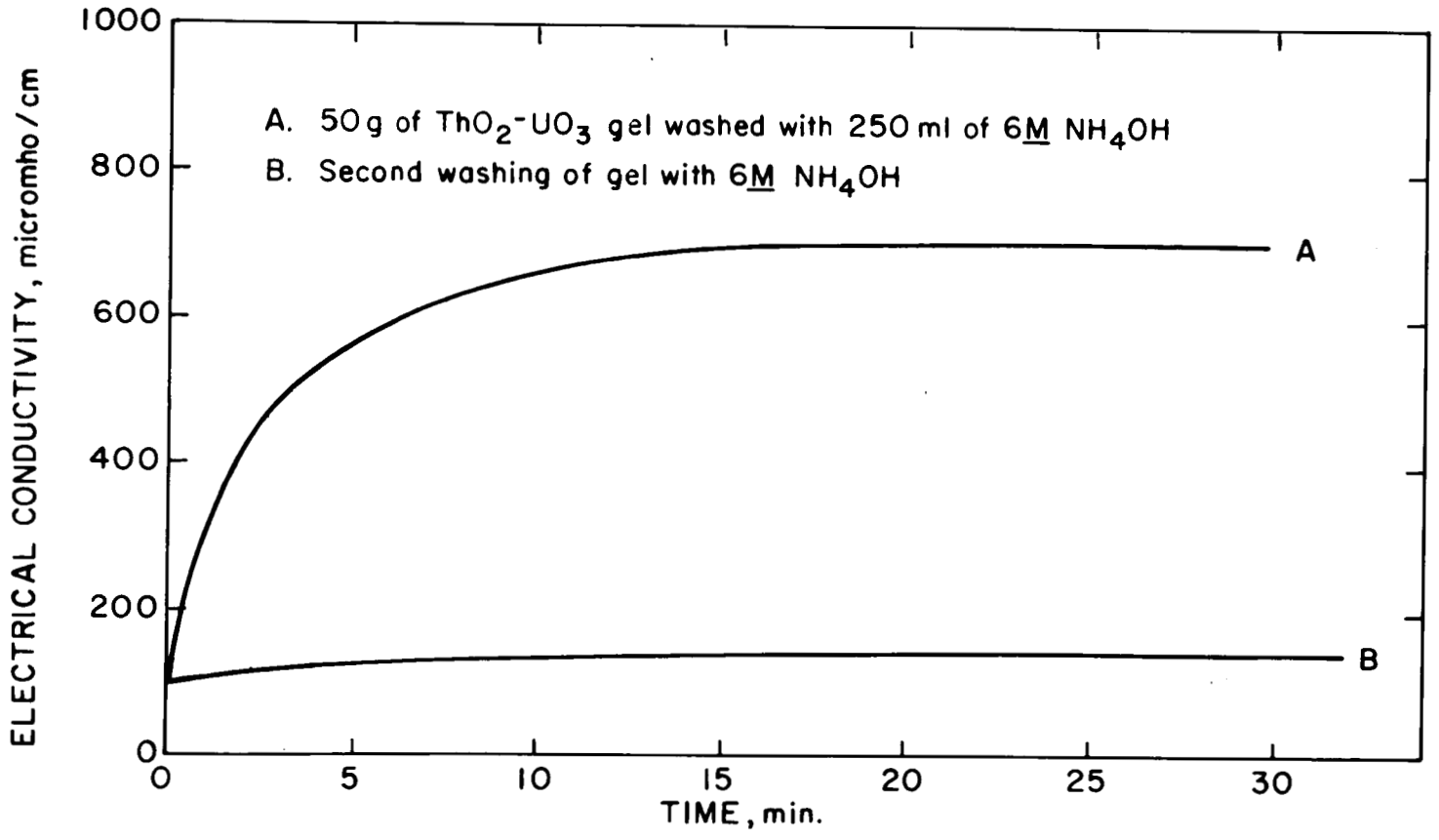

Fig. 18. Conductivity as a Function of Washing Time in 6 M NH_4OH.

Table 6 compares the percentage of good-quality product that is obtained after NH_4OH washing with that obtained after drying in steam. Approximately 50% of the gel product with a Th/U atom ratio of 4.25, but $\leq$ 15% of the product with a Th/U atom ratio of 3, was found to be cracked after washing with NH_4OH. Figures 19 and 20 are photomicrographs of dried and fired samples of the 0740-5-19 preparation.

About 5 kg of microspheres were made in the CPDL, using a 75% ThO_2--25% UO_2 feed sol and an NH_4OH wash. Roundometer results showed a yield of about 85%; however, the surfaces of the particles were spalled and of poor appearance.[15]

No temperature excursion or further breakage of microspheres was observed when the microspheres washed in NH_4OH were fired to 1100°C in air at a temperature increase rate of 300°C/hr, or when they were dried in steam to 200°C at a temperature increase rate of 200°C/hr. Since the microspheres still contained 3 to 6% organics (carbon) after being washed in NH_4OH and then dried at room temperature, we decided to steam dry the spheres to 200°C and thereby reduce the quantity of organics that must be removed by combustion in the calcination process. The properties of the product with regard to density, carbon content, and surface area were identical with those for products obtained from firing gel microspheres that had had no NH_4OH washing treatment. Typical properties for product obtained by firing (to 1100°C) gel microspheres that had either been dried in steam to 200°C or had been washed with NH_4OH were as follows:

Density = 97 to 99% of theoretical
Carbon = 20 to 40 ppm
BET surface area = 0.002 to 0.004 m^2/g.

The density was measured by mercury intrusion at 15 psi. No further increase in mercury density was observed when the pressure was increased to 10,000 psi. This indicated that the remaining pores were less than 0.02 μ in diameter if open; however, they could have been larger if they were closed.

Y-98892 Y-98893

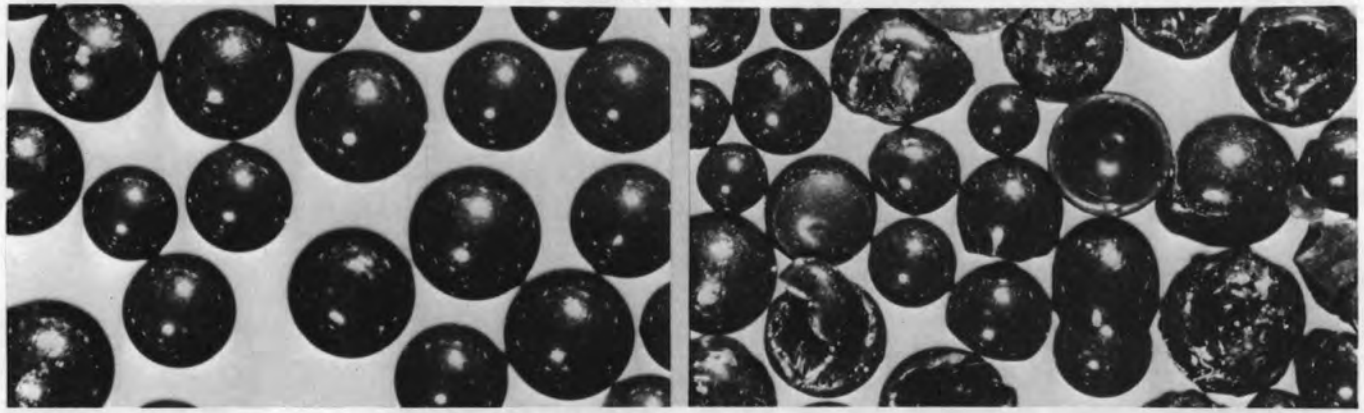

A GEL SPHERES AFTER STEAM DRYING TO 200°C
(1) Round Fraction = 97.9%
(2) Non-Round Fraction = 2.1%

Y-98894 Y-98895

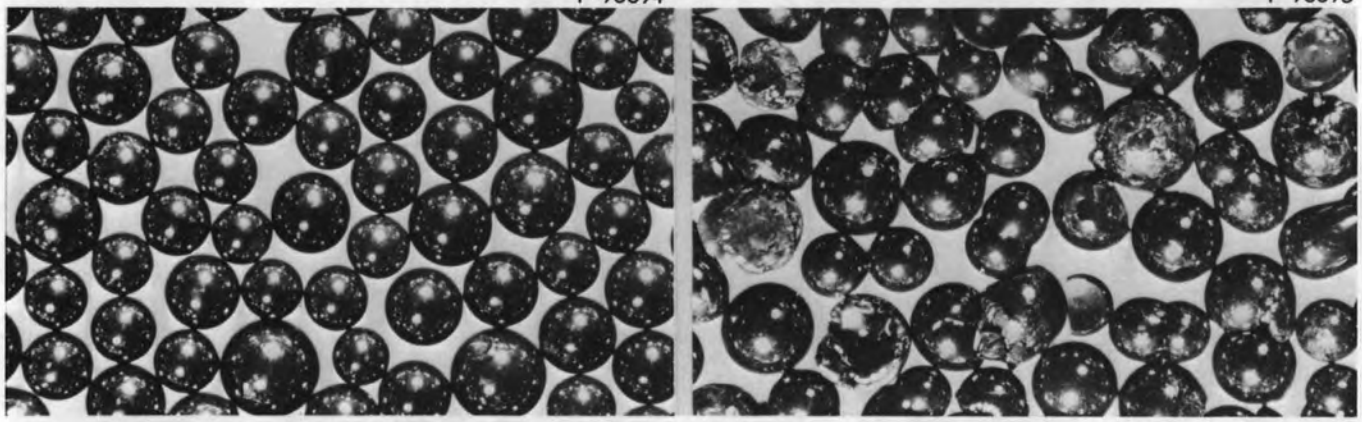

B CALCINED SPHERES OBTAINED USING GEL SPHERES
(1) Round Fraction = 98.8%
(2) Non-Round Fraction = 1.2%

Fig. 19. Photomicrographs of Steam-Dried and Calcined Microspheres. 300X.

Y-98898 Y-98899

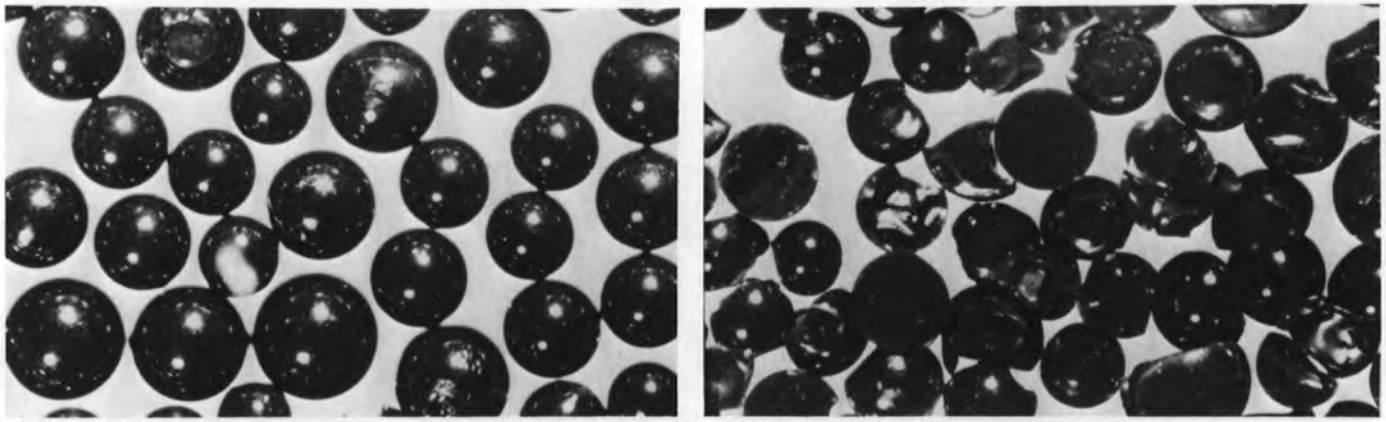

A GEL MICROSPHERES AFTER NH_4OH WASHING AND THEN DRYING TO 200°C IN STEAM
(1) Round Fraction = 56%
(2) Non-Round Fraction = 44%

Y-98896 Y-98897

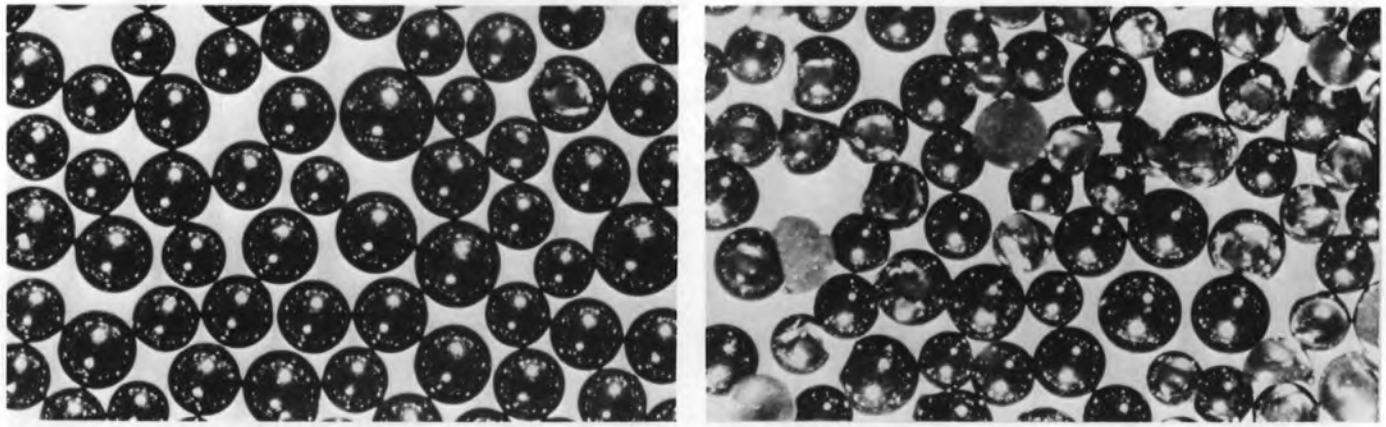

B CALCINED MICROSPHERES OBTAINED USING GEL SPHERES
(1) Round Fraction = 55.3%
(2) Non-Round = 44.7%

Fig. 20. Photomicrographs of NH_4OH-Washed and Calcined Microspheres.

3.2.3 Results

Since we operated fixed-bed dryers of different designs in the first and second campaigns, results of the campaigns are discussed separately.

The First Campaign. — The existing dryers, which had been adequate for thoria microsphere production, were not suitable for use with 20-kg batches of mixed oxide microspheres and could not meet the 48-hr turnaround requirement. Temperature excursions repeatedly damaged the product. Losses from the excursions ranged from 100% in the first batch to 50% in the fourth (and last) batch. Temperature excursions had occurred with a small (5-kg) batch of mixed oxide microspheres in these dryers in an earlier scouting run, but breakage did not exceed 10%. However, the larger batch size (20 kg) and the higher Th/U atom ratio of the material in the engineering-scale run (4.25 vs 3) presented a problem of a different magnitude. In each case, the larger batch liberated a greater quantity of heat, which was more difficult to transfer to, and remove from, the dryer wall because of the increased mass and the "insulating" effects of the product itself. The temperature would rise from the 100-150°C range to 300-350°C in only 3 to 4 min; such a rapid temperature rise simply pulverized the product.

In analyzing the performance-control data of the dryers, it became obvious that the design of the dryers was hopelessly inadequate to cope with the excursion problem. Excursions are usually initiated in the 125-135°C range, and yet the internal thermocouple (bed temperature) failed to indicate such temperatures when an excursion began. Although an increase in the bed temperature would occur, it was never observed sufficiently early to give adequate warning. (Excursions can occur at temperatures as high as 200°C, but the reaction becomes less exothermic and less damaging to the product as the temperature of initiation rises.)

Temperature indication and control were also insufficient for the task. Some thermocouples were placed against the electrical heating element, which was located outside the dryer shell. Other thermocouples originally used for control were welded to the shell of the dryer spaced halfway between elements. These readings were useless because they represented the temperature of the dryer shell remote from the heating elements

and at points where the temperature lagged. The latter gave the first warning of excursions, but this warning was too late to be useful.

Heat distribution was poor. Hot spots undoubtedly occurred directly underneath the heaters, and these hot spots initiated the excursions. Areas only a few inches away remained relatively cold. The poor heat distribution was the result of the thin (1/16-in.) dryer shell.

Another severe problem was encountered during the handling of the dryer product after an excursion. Since the excursion left the particles in a partially reduced (and well dehydrated) state, oxidation and rehydration occurred when these particles were exposed to the air. Rehydration probably provided the initial temperature boost that allowed oxidation to begin. Again, because of the large quantities of material handled, the heat of reaction was large; the beads glowed red when they were loaded into crucibles.

Because of the difficulties just described, we decided to cease operation until a dryer meeting our requirements could be provided. Also, because of these difficulties, no process yield or material balance data were calculated for the first campaign.

The Second Campaign. — Except for the loss of an electrical heating element, operation of the new dryer was faultless. Two 20-kg batches were dried using the schedule that is shown in Fig. 21 and the procedure that is outlined in the Appendix. Loss of heating capacity prevented our "baking out" the second dryer batch at 210°C as required in the procedure and thereby contributed indirectly to the high loss of product during calcination of the second dryer batch. Product yields are given in Table 7.

In operating the new dryer, we noted that an excursion was most likely to be initiated during the 105-110°C plateau, when steam was first admitted to the bed. This had not been observed previously due to poor instrumentation. Fortunately, we could turn on the cooling water, stop the steam flow, and limit the temperature to 120-125°C. We could return the temperature to 105-110°C and repeat the cycle until no further rises occurred. (If temperatures had exceeded 130 to 135°C during this portion of the drying cycle, a severe excursion could have occurred and the product

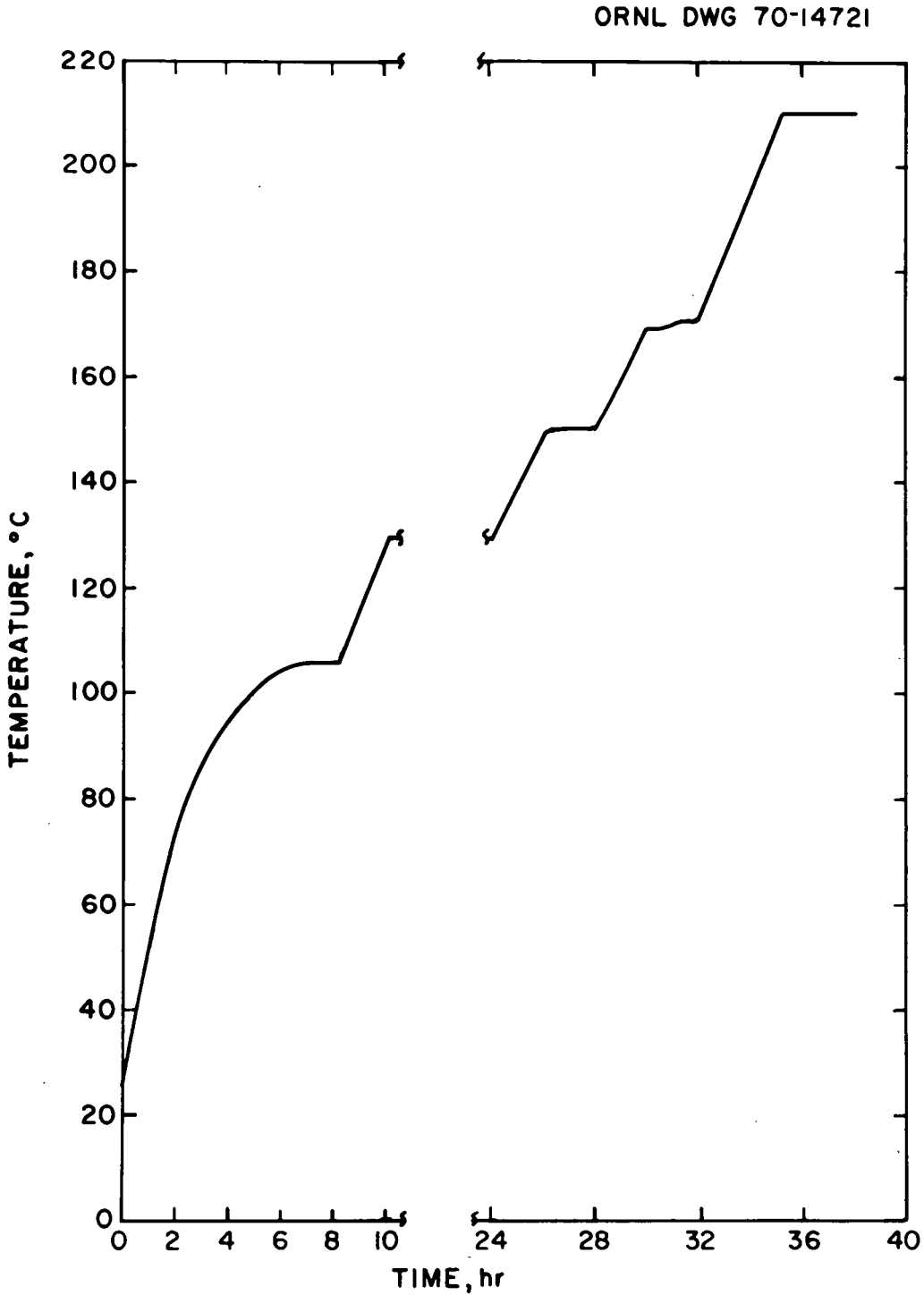

Fig. 21. Temperature-Time Cycle Used with Fixed-Bed Dryer of Improved Design.

Table 7. Summary of Physical and Chemical Properties of Calcined Microspheres in the Second Campaign

Calciner batch number	1	2	3	4	Average
Dryer batch number	1	1	2	2	-
Weight of calcined product, kg	9.578	9.473	9.166	10.391	9.652
250- to 450-μ-diam fraction, kg	8.678	9.198	7.250	8.063	8.297
250- to 450-μ-diam fraction, wt %	90.6	97.1	79.1	77.6	86.0[a]
Mean size, μ	370	356	354	351	358
Standard deviation, μ	19	23	38	29	27
Roundness ratio, D_{max}/D_{min}	1.0236	1.0133	1.0251	1.0257	1.0220
Density, % of theoretical	100.0	100.2	99.4	100.5	100.0
BET surface area, m^2/g	0.017	0.005	0.122	0.009	0.04
O/U atom ratio	2.004	2.010	2.011	2.015	2.01
Carbon content, ppm	40	40	30	40	40
Gas release to 1200°C, cc/g	0.026	0.009	0.030	0.19	0.02

[a]After adjustments were made for process wastes, the actual yield of microspheres meeting specifications was 84%.

could have been destroyed.) The dryer was kept under close observation until the 210°C plateau was reached in order to limit the extent of any excursions. A detailed procedure is included in the Appendix.

To determine the amount of breakage that occurred during the drying and calcination operations, composite samples representing each of the two dryer batches were prepared. Yields of round microspheres in the laboratory support studies ranged from 96 to 99% in each case; there was no detectable difference between the two batches. The CPDL composites were prepared as the dryer was emptied following each dryer cycle. Of the microspheres removed from the first batch, 98.8% were round; however, only 92.3% of the microspheres of the second batch were round. Reject materials in both cases were predominantly microsphere halves. Thus, the difference in product quality between dryer batches 1 and 2 was approximately 6%, which is significant.

The failure of the heating element of the dryer prevented the required bakeout of the dried microspheres at 210°C. Rather than delay the processing of the second batch until the heater element was replaced, we decided to use the calciner for bakeout. Calciner batches 3 and 4 (corresponding to dryer batch 2) were loaded and held at 210°C overnight. Then each batch was calcined using the standard procedure. Temperature control in the calciner was poor at 210°C, contributing, we think, to a marked increase in particle breakage.

3.3 Firing

Operation of the calciner was entirely satisfactory. Calciner-dependent specifications of particle density, carbon content, content of absorbed gases, and O/U atom ratio were met. Both the loading and the unloading of the calciner by use of a fluidizing gas were successful. No interparticle sintering occurred.

3.3.1 Process Description

To effect carbon removal and densification, the dried microspheres are heated in air to 1150°C. The dried microspheres are reduced

at 1150°C to attain the desired O/U atom ratio. The reduced product is then cooled to room temperature in argon. On calcination, the particles undergo about a 65% shrinkage of volume and a 30% shrinkage of diameter.

This procedure has been used throughout our work on ThO_2-UO_3 gels, beginning with the Kilorod Program.[16] A few test firings of gel microspheres with the ThO_2 and UO_2 compositions used in the present study were made in the laboratory prior to the beginning of this study. In the laboratory studies, several samples of the dried gel microspheres were fired to 1150°C (heatup rate, 300°C/hr) in air, held for 1 hr, and then reduced for 4 hr in Ar - 4% H_2. The products had densities of 95 to 98% of theoretical, carbon contents of 20 to 40 ppm, and O/U atom ratios of 2.001 to 2.020. The products were solid solutions of UO_2 in ThO_2, as determined by x-ray lattice parameter measurements, and had a crystallite size of 100 to 2000 A. These gels have a good shrinkage pattern for ease of removal of the remaining volatiles. The density is only about 40% of theoretical at 850°C, and all of the pores are open. Thus the sorbed carbon-bearing materials, nitrates, and water could easily be removed before pore closure occurred.

3.3.2 Equipment

The design and concept for operation of the calciner assumed that: (1) dried microspheres would be loaded by gravity from a storage vessel into an alumina flask permanently located inside a furnace; (2) at first, air (to burn off residual organics) and, later, Ar - 4% H_2 (for reducing the U_3O_8 to UO_2) would be introduced through a tube extending to the bottom of the bed of microspheres; and (3) on completion of reduction, the product would be cooled under argon and transferred (using vacuum and argon as a fluidizing gas) to the product storage bin. Interparticle sintering was not expected to be severe enough to impede the transfer. Complete reduction and elimination of carbon (per specifications) would be obtained as the result of gas entering at the bottom of the bed and subsequently rising in intimate contact with the particles comprising the bed.

The calciner used in the work discussed in this report (see Fig. 22) was obtained by modifying a furnace remaining from a previous project. A high-purity alumina flask, commercially obtained, was built into this

ORNL DWG 69-10386R2

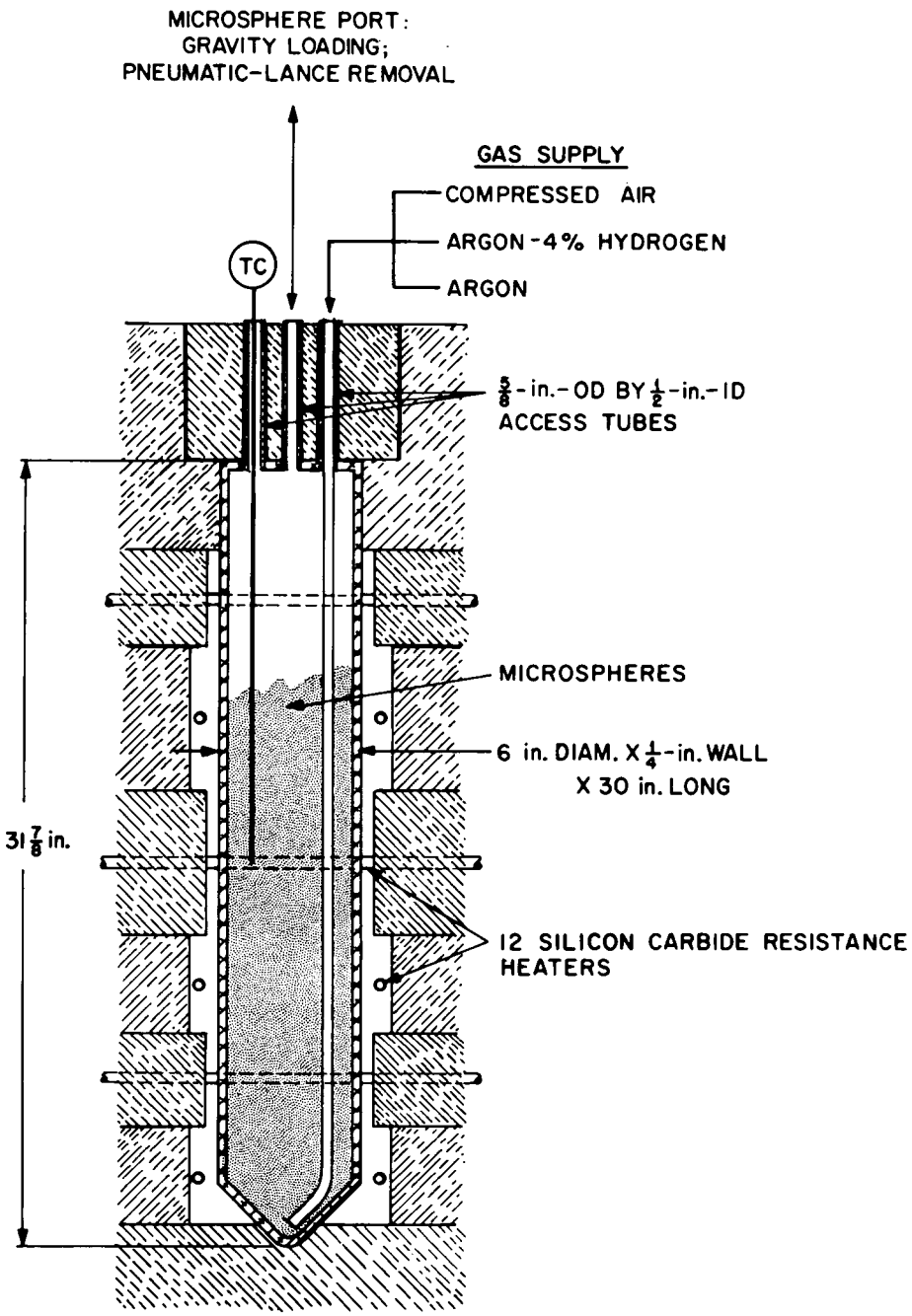

Fig. 22. Calciner Tested in Extended Operating Test with ThO_2–UO_2 Microspheres. Capacity, 10 kg.

furnace. The resulting apparatus, recognized as only an improvisation, was useful primarily in testing our concept. However, we were able to collect sufficient chemical-physical analyses of the product prepared using this concept to afford at least a preliminary evaluation of the properties. This calciner was operated only during the second campaign, but this gave assurance of its mechanical operability. The procedure for its use is given in the Appendix.

3.3.3 Results

Four 10-kg batches of microspheres from the second campaign were fired. The values for density, carbon content, O/U atom ratio, and gas release (Table 7) were better than HTGR specifications. The specifications for chemical impurities were not met since we had substituted a stainless steel gas-entry tube and a thermocouple shield for similar alumina parts. The physical evaluation of the product showed a yield of 86.0% in the 250- to 450-μ-diam range; an overall process yield of 84% was obtained. The yield for the second batch would have been higher if an electrical failure in the dryer had not occurred during processing (see Sect. 3.2.3). The size distribution was satisfactory; the mean size ranged from 351 to 370 μ in diameter. The roundness ratio (D_1/D_2), using diameters measured at right angles to each other, was less than 1.03 as compared with the 1.10 specified.

Since both the chemical evaluation of the product and the product density are governed largely by the firing process and physical properties are governed largely by the sphere-forming process, these subjects are discussed in detail below, under the appropriate headings.

Chemical Evaluation. — A complete trace-element analysis is given in the Appendix.

The O/U atom ratio of the product was much lower than the specified 2.03 (maximum), and the carbon content was less than the specified amount by an order of magnitude. Both of these are low for the same reason. The specifications were based upon experience with muffle furnaces in which the microspheres were contained in deep crucibles (approximately 4 in.).

The reducing gas flowed across the top of the bed, depending upon diffusion to make the gas penetrate the bed. Such deep beds gave poor gas-solid contact; hence, poor oxidation of the residual carbon and poor reduction of the U_3O_8 resulted. The necessity for introducing the gas at the bottom of deep beds and for forced passage of the gases through the beds is emphasized by the excellent results obtained with this arrangement. Any future calciner design should incorporate this feature.

Although our arrangement provided good gas-solid contact and care was taken to protect the bed with a large flow of argon through the bed during the cooldown portion of the calciner cycle, we still had no assurance that the seals were functioning properly. The results suggest that well-designed seals might even permit the production of stoichiometric UO_2 in this type of calciner.

During calciner operation, we were concerned that the product might not meet specifications because: (1) the seals on each of the three entry tubes at the top of the flask were poor, and air in-leakage was anticipated; and (2) ionic contamination was expected in the product due to the substitution of two stainless steel calciner parts (i.e., the thermocouple sheath and the gas entry tube) for the original high-purity alumina parts.

The original calciner thermocouple, sheathed in high-purity alumina, was broken during the first calciner run. Therefore, we substituted a stainless steel sheath, which was readily available, rather than wait for a completely satisfactory replacement. A high-purity alumina gas entry tube also bought at the same time the flask was purchased was too short and did not project far enough beyond the insulation to permit a connection. Accordingly, we substituted a 304 stainless steel tube of the proper size, while at the same time recognizing the limitations of the material (see Appendix).

The calculated surface area for 1 g of 358-μ-diam microspheres is 0.00165 m^2. The very high value for batch 3 (see Table 7) was rechecked and confirmed. Other analytical (or physical) tests failed to show any difference between this product and the other products. Visual inspection of the microspheres also failed to provide an explanation.

The density of the product was found to be essentially theoretical (i.e., 10.17 according to Vegard's law). In the calculation of density by Vegard's law, we used values of 10.95 and 10.00 g/cc for the densities of UO_2 and ThO_2, respectively.

The gas release values are at least a factor of 10 below specifications. These low values are also believed to be the result of the new calciner concept.

Particle Size and Geometric Evaluation. — The four batches of product from the calciner were transferred to the Metals and Ceramics Division for evaluation of particle size and roundness. The particle-size results for batches 3 and 4 are shown in Fig. 23.

Eighty-six percent of our total calcined product met the size and roundness requirements of the Metals and Ceramics Division.[17] Making adjustments for the process wastes generated, we showed an overall yield of 84% of product-grade microspheres. We consider these results excellent for a first effort.

The specified mean particle size was 350 μ. Obviously some tolerance must be allowed; however, no information on tolerances existed. In the future, tolerances should be set for both the mean size and the size distribution.

The mean sizes of the four batches of calcined microspheres ranged from 350 to 370 μ. This result shows that the process used in our studies is capable of producing microspheres whose mean size can be routinely controlled to within ±10 μ of a desired value.

A D_1/D_2 ratio was determined for the microspheres as follows: A sample of 50 product-grade microspheres from each of the four calciner batches was photographed. By using a print prepared at 50X and a metric scale, two diameters were measured at right angles for each particle. The diameter ratios were then calculated for each microsphere. The most eccentric single microsphere of the 200 particles measured had a diameter ratio that was well within specified limits.

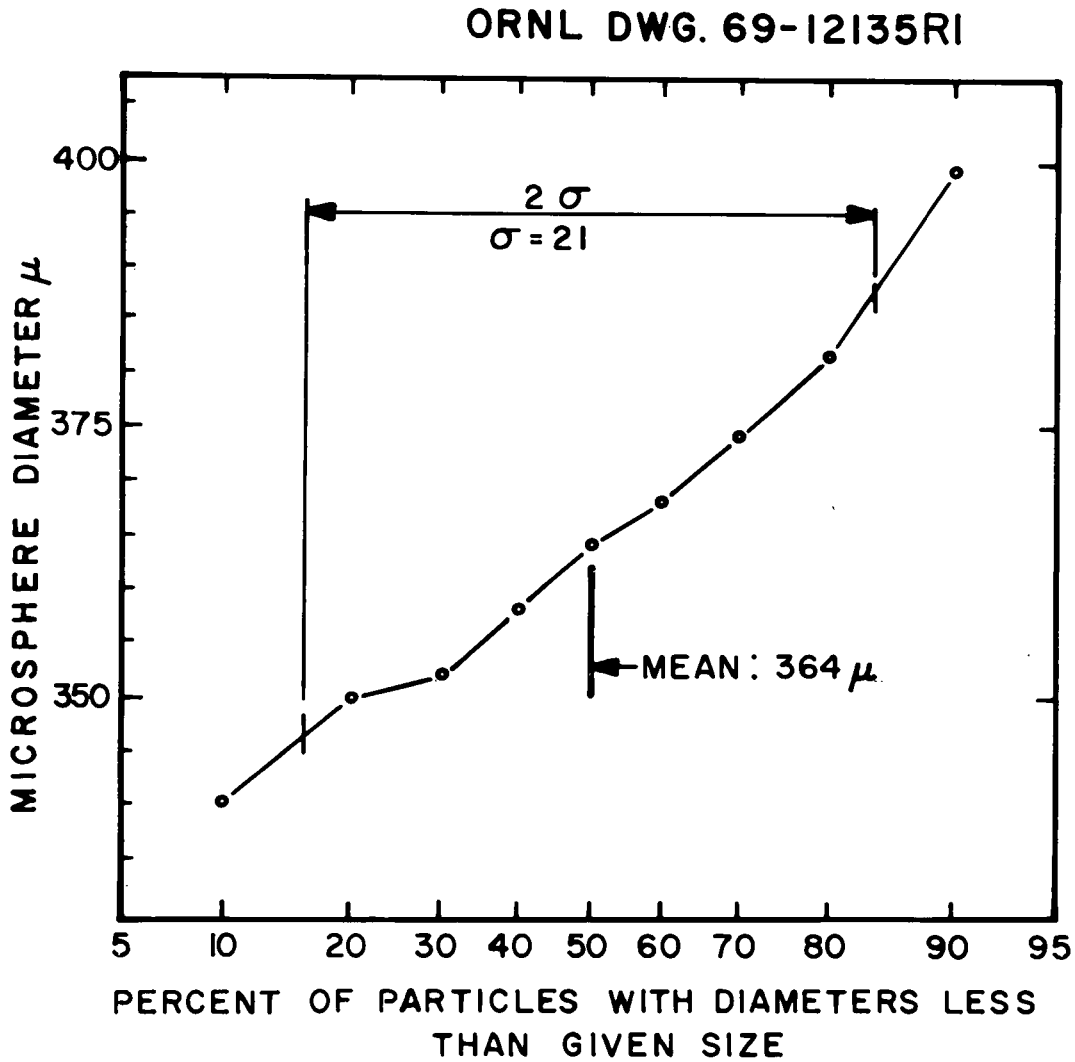

Fig. 23. Size Distribution for the Calcined Product from Calciner Batches 1 and 2.

The surface properties of the product-grade microspheres were excellent. No pitting, wrinkling, spalling, or similar defects could be found. The surface finish varied from a glistening black to a barely noticeable "frosted" finish.

The average crushing strength, as measured for 20 particles (five from each calciner batch), was 1011 g; individual values ranged from 250 to 2100 g. This wide variation was expected since it is common in other types of sol-gel microspheres.

3.4 Material Balance

No attempt at a (Th + U) accountability was made during the first campaign. However, in the second campaign, feed materials were strictly accounted for.

The results of the material balance for the second campaign are presented in Table 8.

3.4.1 Normal Process Wastes or Losses

The entire column circuit was cleaned thoroughly following the second campaign. The sources of the recovered wastes are described below.

Equipment Cleanout Following Run. — The near-colloidal, suspended solids contained in the alcohol were drained from the system at the end of the run. The large settler located between the top of the column and the surge tank collected solids leaving the top of the column. These solids, which deposited in the settler, were removed daily; a total of 133 g was removed during and following the second campaign.

Solids Lost Through Distillate to Waste Drain. — The water removed from the recycled 2EH is routed to the waste drain. This stream was sampled routinely, and its volume was noted. Calculations showed the loss to be negligible (i.e., $\sim$1 g) for the second campaign. It would be difficult to recover this material since it is probably particulate in nature.

Table 8. Material Balance for Microsphere Preparation in the Second Campaign

Conditions: (1) Feed was ThO_2-UO_3, low-nitrate, solvent-extraction-type sol. Th/U ratio: 4.25. Composite No. 1

(2) Where necessary, quantities were adjusted in proportion to quantity of EV-38 fed

	Quantity of (Th + U)	
	kg	% of Total Fed
Material Fed into Column (from sol weight and concentration)	37.555	100.0
Materials Removed from Column and Dryer		
Normal process wastes		
Equipment cleanout following run	0.435	
Dust from dry material transfer (filters)	0.136	
Solids lost through distillate to waste drain	0.001	
Out-of-round calciner product	5.149	
Subtotal	5.721	15.23
Product materials		
Calciner product (adjusted to the basis that all dryer product was calcined, i.e., no samples removed)	35.744	
Removed after nonprocess column shutdowns	1.036	
Correction for out-of-round calcined microspheres	(5.149)	
Subtotal	31.631	84.23
Accountability Totals		
Total material accounted for	37.352	99.5
Apparent loss	0.203	0.5

Dust from Dry Material Transfers. — Microspheres are transferred from the dryer to the furnace and from the furnace to the product bin by vacuum-argon. This waste is comprised of dust caught by filters in the vacuum system.

Out-of-Round Calcined Microspheres. — Fourteen percent of the calcined product was rejected as being out-of-round. This waste is represented by the 5.149-kg quantity shown in Table 8.

2EH Accountability. — We intended to account for the 2EH during the second campaign, but the dryer had a small leak that went undetected for about 24 hr. Since a leak rate of about 15 cc/min would have completed the balance, we assumed that the leak rate was of this order. No other losses were observed. The only known losses from the pilot plant were the 2EH lost by its solubility in the water removed by the still and the organics discharged to waste during the period that the microspheres were being steam dried. Both were small; the loss from the distillation was about 1 cc/kg (Th + U), and the loss from drying was about 80 to 100 cc/kg.

3.5 Conclusions

From the experiences described in this report, we have drawn the following conclusions with regard to our microsphere preparation process and equipment:

1. Good-quality microspheres can be prepared by using either the continuous or the batch method of surfactant control.

2. The continuous method for controlling the surfactant concentration in the sphere-forming column is definitely superior to the batch addition method for the following reasons: (1) it can be set up to operate automatically, requiring no operator attention; (2) it is far less

subject to operator error; (3) it can be controlled with analytical accuracy; and (4) surfactant concentrations do not build up and, in turn, waste product levels are lower. The actual buildup of waste products can be calculated since this value is a function of throughput and system inventory. Future work can determine the rates at which waste products are produced, as well as the tolerance levels for these products. From such data, the volume of the recycle stream to be purified can be calculated.

3. Operation with the multiple two-fluid nozzle unit, which consists of 11 nozzles, is entirely satisfactory; however, a multiple-orifice, gravity-type disperser has performed satisfactorily in other tests and should also be applicable for this type of operation.

4. Yields of 90 to 95% for 250- to 450-μ-diam product microspheres can be expected from the sphere-forming process at the current level of development. Control of the mean diameter size in the 300- to 400-μ-diam size range can be attained to ±3% of the specified diameter.

5. The forming, drying, and firing operations in the preparation of microspheres appear adaptable to remote operation at this time. The column circuit, as it now stands, is sufficiently developed to allow immediate adaptation. With little additional experience and testing, our present dryer may also be remotely operable. The test of the calciner showed its concept to be feasible. It is possible that a calciner could be designed to operate remotely if a few more runs were made to define problems and to refine operating techniques.

6. Future work should be directed toward flowsheet testing in order to increase product quality and yields. The final testing of the dryer and calciner designs should also be undertaken. In-line instrumentation to provide size and shape control of the microspheres should be studied.

4. ACKNOWLEDGMENTS

The work of many individuals made the success of this demonstration possible. The sol preparation and microsphere production equipment was efficiently operated by R. D. Arthur, E. R. Johns, S. A. McCosh, D. A. McWhirter, J. C. Rose, W. A. Lindsey, C. H. Tipton, and D. E. Willis. C. W. Greene performed the laboratory experiments on drying and firing; and K. J. Notz, Jr., A. B. Meservey, and A. S. Lyle provided aid in obtaining analytical data on the solvent throughout the demonstration.

Gratitude is expressed to Dr. F. J. Furman and his group in the Metals and Ceramics Division for providing the product evaluation tests on particle shape and for assistance in editing this report. Thanks are also due the groups of W. R. Laing and G. R. Wilson of the Analytical Chemistry Division for performing the chemical analyses.

The helpful advice and assistance given by A. D. Ryon with regard to the sol preparation, and by P. A. Haas in all areas of the demonstration runs, are especially appreciated.

5. REFERENCES

1. J. G. Moore, Sol-Gel Process for Preparing ThO_2-UO_3 Sols from Nitrate Solutions by Solvent Extraction with Amines, ORNL-4095 (October 1967).
2. J. P. McBride (compiler), Laboratory Studies of Sol-Gel Processes at the Oak Ridge National Laboratory, ORNL-TM-1980 (September 1967).
3. P. A. Haas, C. C. Haws, Jr., F. G. Kitts, and A. D. Ryon, Engineering Development of Sol-Gel Processes at the Oak Ridge National Laboratory, ORNL-TM-1978 (January 1968).
4. R. G. Wymer, "Laboratory and Engineering Studies of Sol-Gel Processes at Oak Ridge National Laboratory," in Sol-Gel Processes for Ceramic Nuclear Fuels, Proceedings of a Panel, Vienna, 6-10 May 1968, IAEA, Vienna, 1968; also published as ORNL-TM-2205 (May 1968).

5. J. W. Snider, The Design of Engineering-Scale Solex Equipment, ORNL-4256 (April 1969).

6. P. A. Haas, Sol-Gel Preparation of Spheres: Design and Operation of Fluidized Bed Columns, ORNL-4398 (September 1969).

7. J. R. Parrott, F. L. Daley, F. J. Furman, and J. W. Snider, "Demonstration of $^{233}UO_2$-ThO_2 Microsphere Production by the Sol-Gel Process," Trans. Am. Nucl. Soc. 12, 27-28 (1969).

8. C. C. Haws, Jr., and J. W. Snider, A Vertical Tube Furnace for Continuously Calcining Sol-Gel-Derived ThO_2-UO_2 at a Rate of 35 Kilograms Per Day, ORNL-3894 (January 1969).

9. Chem. Technol. Div. Ann. Progr. Rept. May 31, 1969, ORNL-4422, pp. 187-90.

10. C. C. Haws, Jr., unpublished data, November 1968.

11. K. J. Notz and A. B. Meservey, Microsphere Forming Conditions for ThO_2-UO_2 Sols: A Factorial Experiment, ORNL-TM-2516 (August 1969).

12. C. C. Haws and J. W. Snider, "Development and Full-Scale Testing of Process Equipment for the Thorium-Uranium Recycle Facility," Trans. Am. Nucl. Soc. 10, 95-96 (1967).

13. A. S. Lyle and K. J. Notz, ORNL, personal communication, Feb. 3, 1969.

14. P. A. Haas, F. G. Kitts, and H. Beutler, "Preparation of Reactor Fuels by Sol-Gel Processes," Chem. Eng. Progr., Symp. Ser. 63, 16-27 (1967).

15. F. J. Furman, Jr., ORNL, personal communication, June 5, 1969.

16. C. C. Haws, J. L. Matherne, F. W. Miles, and J. E. Van Cleve, Summary of the Kilorod Project--A Semiremote 10-kg/Day Demonstration of $^{233}UO_2$-ThO_2 Fuel Element Fabrication by the ORNL Sol-Gel Vibratory-Compaction Method, ORNL-3681 (August 1965).

17. F. J. Furman, Jr., ORNL, personal communication, June 17, 1969.

18. P. A. Haas, ORNL, personal communication, Feb. 27, 1969.

6. APPENDIX

Detailed analytical data are given in this section. Operating procedures that were developed during the tests or are thought to be of special interest to the reader are also included. Other data and/or discussions too voluminous to include in the regular text are referenced.

6.1 Analytical Data Collected During the 10-day Continuous Test

The analytical data that were collected during the operation of the sol preparation equipment are presented in Tables 9-11.

Table 9. Analysis of Nitrate Feed[a]

Batch No.	Th Conc. (M)	U Conc. (M)	NO_3^- Conc. (M)	(Th + U) Conc. (M)	Th/U Atom Ratio
1	0.300	0.070	1.377	0.370	4.29
2	0.297	0.069	1.384	0.366	4.30
3	0.300	0.069	1.370	0.370	4.35
4	0.300	0.070	1.370	0.370	4.29
5	0.303	0.070	1.413	0.373	4.33
6	0.300	0.070	1.392	0.370	4.29
7	0.295	0.069	1.381	0.364	4.28
8	0.289	0.068	1.345	0.357	4.25
9	0.290	0.068	1.361	0.359	4.26
10	0.295	0.069	1.361	0.364	4.28
11	0.297	0.069	1.361	0.366	4.30
12	0.296	0.069	1.305	0.365	4.29
13	0.294	0.069	1.361	0.363	4.26

[a]Thirteen 100-liter batches.

Table 10. Analysis of Evaporator Feed (Dilute ThO_2-UO_3 Sol)[a]

Run No.	Th Conc. (M)	U Conc. (M)	(Th + U) Conc. (M)	NO_3^- Conc. (M)	NO_3^- / Metal Mole Ratio	Conductivity (micromhos/cm)	pH
1	0.258	0.059	0.317	0.034	0.107	608	4.64
2	0.255	0.059	0.314	0.036	0.113	561	4.64
3	0.260	0.060	0.320	0.037	0.117	551	4.57
4	0.259	0.060	0.319	0.036	0.113	551	4.59
5	0.259	0.060	0.319	0.038	0.119	551	4.61
6	0.261	0.060	0.321	0.036	0.112	551	4.61
7	0.256	0.059	0.315	0.037	0.117	514	4.66
8	0.256	0.059	0.315	0.037	0.117	516	4.66
9	0.253	0.058	0.311	0.039	0.126	514	4.74
10	0.255	0.059	0.314	0.037	0.118	516	4.80
11	0.252	0.058	0.310	0.036	0.116	514	4.80
12	0.256	0.059	0.315	0.036	0.114	530	4.81
13	0.253	0.058	0.311	0.039	0.125	524	4.78
14	0.256	0.059	0.315	0.037	0.117	541	4.84
15	0.255	0.059	0.314	0.036	0.115	549	4.77
16	0.253	0.058	0.311	0.037	0.118	545	4.77
17	0.256	0.059	0.315	0.037	0.117	551	4.80
18	0.255	0.059	0.314	0.036	0.115	564	4.82
19	0.256	0.059	0.314	0.037	0.118	555	4.82
20	0.255	0.059	0.314	0.040	0.126	558	4.86
21	0.253	0.059	0.311	0.041	0.133	571	4.81
22	0.251	0.058	0.310	0.038	0.123	556	4.80
23	0.250	0.058	0.308	0.037	0.121	569	4.84
24	0.250	0.058	0.308	0.038	0.125	569	4.81
25	0.247	0.058	0.305	0.038	0.125	571	4.87
26	0.246	0.057	0.303	0.036	0.119	569	4.93
27	0.246	0.057	0.303	0.037	0.121	569	4.93
28	0.247	0.057	0.304	0.042	0.138	566	4.87
29	0.245	0.057	0.302	0.039	0.130	566	4.94
30	0.248	0.058	0.306	0.039	0.126	556	4.61
31	0.248	0.058	0.306	0.041	0.134	556	4.63
32	0.250	0.058	0.308	0.041	0.132	556	4.77
33	0.250	0.058	0.308	0.041	0.134	541	4.73
34	0.253	0.059	0.311	0.044	0.140	526	4.71
35	0.252	0.058	0.310	0.040	0.127	517	4.69
36	0.253	0.059	0.313	0.038	0.121	517	4.69
37	0.254	0.059	0.313	0.037	0.117	504	5.03
38	0.252	0.059	0.311	0.040	0.128	491	4.63
39	0.249	0.059	0.308	0.037	0.119	495	4.48
40	0.250	0.058	0.308	0.040	0.129	495	4.48
41	0.250	0.058	0.308	0.037	0.120	495	4.51
42	0.250	0.058	0.308	0.037	0.120	495	4.55
43	0.246	0.058	0.304	0.035	0.115	491	4.46

[a]Forty-three 33.16-liter batches.

Table 11. Analysis of Concentrated 81% ThO_2 - 19% UO_3 Sol

Run No.	Th Conc. (M)	U Conc. (M)	(Th + U) Conc. (M)	NO_3^- Conc. (M)	$\frac{NO_3^-}{Metal}$ Mole Ratio	Conductivity (micromhos/cm)	pH	Viscosity (centistokes)	Density (g/cm^3)
1	1.181	0.275	1.45	0.140	0.096	2650	5.19		
2	1.301	0.302	1.60	1.154	0.096	2640	5.24		
3	1.280	0.296	1.58	0.163	0.103	2580	5.20		
4	1.319	0.303	1.62	0.179	0.110	2700	5.22		
5	1.362	0.313	1.67	0.171	0.102	2770	5.26		
6	1.353	0.312	1.67	0.173	0.104	2730	5.20		
7	1.336	0.307	1.64	0.179	0.109	2750	5.19		
8	1.340	0.308	1.65	0.174	0.106	2700	5.19		
9	1.340	0.308	1.65	0.181	0.110	2810	5.19		
10	1.370	0.314	1.68	0.187	0.111	2680	5.25		
11	1.370	0.314	1.68	0.197	0.117	2750	5.26		
12	1.270	0.294	1.57	0.182	0.116	2520	5.24		
13	1.360	0.311	1.67	0.189	0.113	2800	5.27		
14	1.380	0.317	1.69	0.192	0.113	2820	5.27		
15	1.430	0.328	1.76	0.197	0.112	2850	5.23		
16	1.405	0.328	1.73	0.194	0.112	2850	5.20		
17	1.340	0.308	1.64	0.184	0.112	2740	5.18		
18	1.330	0.308	1.64	0.182	0.111	2770	5.18		
19	1.360	0.316	1.68	0.194	0.115	2850	5.22		
20	1.370	0.318	1.68	0.197	0.117	2890	5.17		
21	1.280	0.299	1.58	0.189	0.119	2770	5.25		
22	1.293	0.300	1.59	0.198	0.124	2730	5.17		
23	1.33	0.309	1.64	0.200	0.122	2850	5.16		
24	1.29	0.303	1.60	0.192	0.120	2850	5.18		
25	1.29	0.302	1.59	0.179	0.112	2830	5.25		
26	1.25	0.295	1.55	0.181	0.117	2760	5.25		
27	1.31	0.305	1.62	0.184	0.114	2750	5.24		
28	1.30	0.304	1.61	0.192	0.119	2780	5.22		
29	1.29	0.302	1.59	0.200	0.127	2790	5.15		
30	1.25	0.290	1.54	0.197	0.128	2770	5.07		
31	1.29	0.303	1.60	0.203	0.127	2860	5.01		
32	1.34	0.314	1.66	0.200	0.121	2890	5.03		
33	1.30	0.307	1.61	0.203	0.126	2690	5.01		
34	1.30	0.303	1.60	0.124	0.124	2640	5.09		
35	1.24	0.288	1.52	0.187	0.123	2330	5.02		
36	1.33	0.310	1.64	0.190	0.116	2440	5.06		
37	1.34	0.318	1.66	0.203	0.122	2450	5.03		
38	1.34	0.317	1.66	0.184	0.111	2510	5.10		
39	1.31	0.308	1.61	0.192	0.119	2540	5.02		
40	1.31	0.308	1.62	0.190	0.117	2570	5.02		
41	1.50	0.352	1.85	0.213	0.115	2890	5.05		
42	1.36	0.323	1.68	0.205	0.122	2580	4.99		
43	1.30	0.309	1.61	0.181	0.112	2510	5.05		
Comp. No. 1	1.336	0.309	1.65	0.189	0.115	2730	5.20	1.63	1.4062
Comp. No. 2	1.324	0.313	1.64	0.184	0.112	2720	5.07	1.37	1.4033

6.2 Sample Calculation of Still Feed Rate Required to Maintain a Desired Steady-State Water Content in the 2EH of the Column

Given: (1) Sol feed rate of 20 cc/min.

(2) 80% of water is extracted from sol droplet into 2EH.

(3) Boiling point of 0.7 vol % water in 2EH is 140°C, the desired still operating temperature.

(4) Water content of 2EH in system inventory is 1.25%.

H_2O extracted into 2EH = 20 cc/min x 80%

= 16 cc/min.

Percent water removed per distillation pass = 1.25 - 0.7

= 0.55

$$\text{Still feed rate} = \frac{16 \text{ cc/min}}{0.0055}$$

= 2900 cc/min.

Variations of the above can be used to obtain any of the related operating parameters.

6.3 Analytical Data for 2EH in the Column System and for the Condensate Leaving the Distillate System

The analytical data obtained for the 2EH in the column system and for the condensate leaving the distillate system are given in Tables 12 and 13.

6.4 Contaminant Levels in Calcined Microspheres

The levels of ionic impurities in the microspheres (Table 14) exceeded specifications. Examination of the data shows that some of the contaminants were present in the basic feed materials, some may be attributed to the use of stainless steel in the calciner, while others seemingly were contributed by the calciner. Sol preparation does not appear to be a contributor. Contamination is a problem for future work.

Table 12. Analytical Data for 2EH[a] in the Column System

H_2O Content (vol %)	NO_3^- Content (mg/ml)	Amine Conc. (M)	Apparent pH[b]	pH[c]	Total Solids (mg/ml)
0.77	0.011	0.002	6.5	4.3	0.015
0.73	0.005	<0.001	6.6	4.4	0.46
0.72	0.004	<0.001	6.3	4.5	0.22
0.73	0.004	<0.001	6.4	4.4	0.30
0.64	0.010	<0.001	6.6	4.2	0.39

[a]Samples were taken once each day during the second campaign.

[b]The apparent pH was measured by immersing the electrodes of a pH meter directly into a sample of 2EH.

[c]The pH values were obtained by shaking equal volumes of distilled water and 2EH, decanting, and measuring the pH of the water layer.

Table 13. Analytical Data for Condensate (H_2O)[a] Leaving the Distillation System

Conductivity (mhos x 10^{-5})	pH	Total Solids (ppm)	NO_3^- Content (mg/ml)	Total Nitrogen Content (mg/ml)	Carbon Content (mg/ml)
13.4	4.12	12	0.006	0.17	0.76
8.75	3.99	16	0.004	0.026	0.73
7.92	3.93	10	0.003	0.012	0.79
7.92	3.92	14	0.002	0.012	0.76
7.92	3.92	22	0.002	0.013	0.73
7.85	3.91	14	0.003	0.014	0.81
9.49	3.19	38	0.005	0.013	0.73

[a]Samples were taken at approximately equal intervals during the second campaign.

Table 14. Levels of Ionic Impurities in Feed Materials, Sol, and Product Microspheres

Contaminant Ion	Feed Materials		Sol	Microspheres in Calciner Batch			
	UO_3	$Th(NO_3)_4 \cdot 4H_2O$		1	2	3	4
Ag	--	--	--	<1	<1	<1	<1
Al	60	15	60	600	100	300	30
B	0.6	6	6	10	10	60	3
Ba	0.2	3	3	40	20	40	20
Ca	70	70	70	100	600	1000	100
Cb	2	<0.2	<0.2	0.1	0.1	0.1	0.1
Co	<0.2	<0.2	<0.2	1	1	1	1
Cr	400	3	3	20	40	70	20
Cu	1	1	50	20	100	200	50
Fe	600	30	300	400	600	1000	200
K	20	7	3	10	10	50	10
Mg	5	40	40	70	400	800	80
Mn	1	1	3	5	10	5	5
Mo	<0.2	<0.2	10	5	5	5	5
Na	10	40	40	50	500	700	50
Ni	4	15	150	50	300	300	40
P	20	15	15	50	200	300	10
Si	60	10	100	100	500	800	200
Sr	<0.2	1	1	5	5	10	5
V	0.4	0.3	1	1	1	1	1
Zn	0.5	15	6	10	10	30	20
Zr	<0.2	<0.2	<0.2	0.2	0.2	0.2	0.2
Y	<0.2	15	4	20	20	30	10
La	<1	9	3	10	10	10	10
Ce	<1	30	9	30	20	30	20
Pr	<1	3	1	2	2	2	2
Nd	<1	9	9	5	5	5	5
Sm	<1	1	1	≤2	≤2	≤2	≤2
Eu	<1	<1	<1	<1	<1	<1	<1
Gd	<1	3	1	≤2	≤2	≤2	≤2
Dy	<1	<1	1	<1	<1	<1	<1
Other rare earths	<1	<1	<1	<1	<1	<1	<1

6.5 Roundometer Analysis of the Batches of Calcined Product

The particles in both of the dryer batches were examined for roundness before calcining. The comparison of the percentages of round particles in the calcined product with the known percentages of round particles charged to the calciner would give an estimate of breakage during calcining. Rather than run the dried beads through a sample splitter and risk unnecessary breakage, we prepared composite samples. Each batch had been loaded from the dryer directly into ten wide-mouth jars, each of which contained approximately 2 kg. A "grab" sample of 10 g was scooped from each jar for the composite. Tests of these samples showed that 98.8% of dryer batch 1 and 92.3% of dryer batch 2 were round. The material that was rejected by the roundometer was screened by the Metals and Ceramics Division into particles greater than 210 μ in size.[17] The 210-μ screen size was selected in order to pass any fines generated in the process but to hold back particles of interest (e.g., halves of beads).

The amount of waste in these fractions is tabulated below:

Calciner Batch No.	Rejected Material (% of Calciner Batch)	
	>210 μ	<210 μ
1	5.9	3.5
2	1.5	1.4
3	18.3	2.6
4	19.9	2.5

The tabulated data for the <210-μ fraction show that a comparatively constant percentage of fines was generated throughout the test. Microscopic examination showed that the fines came from shattered particles. Dust was almost nonexistent.

Examination of the >210-μ fractions showed that the majority of each of the samples came from broken particles (i.e., halves). Sphericity seemed to be as good in the halves as in the product-grade spheres. Some foreign material (i.e., material that was not in the shape of microspheres

or microsphere fragments) was present in all of these samples. The material consisted mostly of gel fragments. These fragments had formed as agglomerates of wet beads. A typical source of this type of material would be the two accidental interruptions of operations during the collection of dryer batch 2. This explains the markedly higher population of such material in calciner batches 3 and 4. In addition, the same sample had a number of extrusions shaped like the meat of a cashew nut; also, there were peripheral ridges around the extrusions. We did not see extrusions of this type during operation; however, they probably indicate plugging, or partial plugging, and resultant extrusion through some of the needles of the feed nozzle.

The fact that the majority of the rejected material was comprised of microsphere halves indicates that the breaking forces were weak. Strong forces shatter, or pulverize, the microspheres as the temperature excursions did in the drying operation of the first campaign. Again, this indicates that the breakage was probably the result of mechanical handling or improper drying in the calciner, as discussed earlier.

6.6 In-Line Measurement of the Water Content of Recycled 2EH

An in-line boiling-point device gave adequate indication of the water content of 2EH.[6] The apparatus that we used to demonstrate this operates as follows. A small, metered stream of 2EH is continuously pumped into the still pot of the boiling-point device. Overflow from the still pot returns to the column circuit. An electrical heater provides the required heat, which is sufficient to heat the 2EH stream to boiling, even if it is completely dry (183°C). The test apparatus (Fig. 24) was fabricated with a 120-v, 350-w heater, and was tested with a 2EH flow of 62 cc/min. The vapors are completely condensed by an oversized condenser that is mounted immediately above the liquid pot, and the condensate drips directly back into the liquid pool. Thus the liquid pool remains at the boiling point of the feed 2EH stream. The water content can be determined from the measured boiling point of the solution.

ORNL DWG 70-14123R1

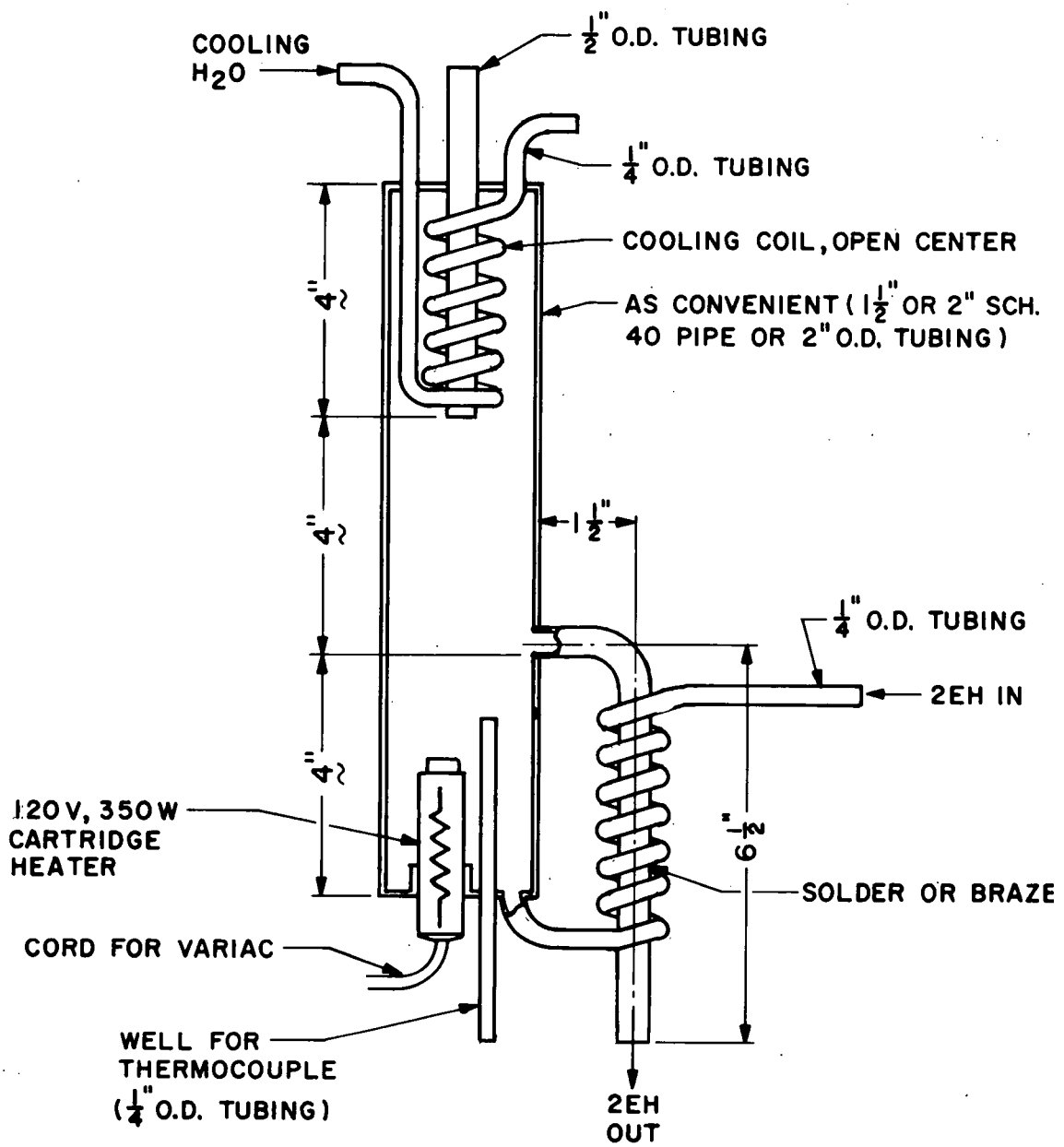

Fig. 24. In-Line Boiling Point Apparatus Used to Measure Water Content of 2EH.

6.7 Calculation of the Time Required to Reach Steady-State Concentration in a Continuously Purged System

The continuous removal of 2EH from the process (with contained impurities) and the replacement of this solvent with fresh 2EH would have the effect of limiting the buildup of impurities and would offer a practical long-term method of operation. Testing of a method in which 2EH could be continuously fed into (and out of) the system was, therefore, desirable. Accordingly, equipment for continuously purging the system was installed for the second campaign.

Selection of a purge rate involved the considerations discussed below.

The general effect of purge rates on impurity levels in the microsphere-forming system was first considered by Haas.[18] A purged system in which impurities build up at a constant rate may be described as follows:

$$V_s \frac{dC_t}{dt} = M - FC_t + FC_o \ , \qquad (1)$$

where

V_s = volume of the system, or 245 liters,

C_t = concentration of impurities at any time t, g/liter,

M = rate of impurity buildup, g/hr,

F = flow rate of solvent into and out of system, liters/hr,

C_o = zero, since virgin 2EH is used.

Integration of Eq. (1) yields:

$$1 - \frac{FC_t}{M} = e^{\frac{-Ft}{V_s}} \ . \qquad (2)$$

The term $1 - \frac{FC_t}{M}$ will be recognized as the fraction of the added impurities that remains in the solvent inventory at time t. At 95% equilibrium, this term has a value of 0.05. Solving for $t_{0.95}$, the equation reduces to the following form for the CPDL system:

$$t_{0.95} = 3\frac{V_s}{F} = \frac{735}{F}. \qquad (3)$$

Substituting arbitrary values for F, we tabulate:

$t_{0.95}$ (hr)	F (liters/hr)
74	10
12	60
6	120

The table shows that, by using a purge of 10 liters/hr, approximately three days would be required to reach 95% of equilibrium. This purge rate is probably sufficient since we operated successfully for five days in the first campaign with no purge.

Because no 2EH cleanup system capable of processing 10 liters/hr (167 cc/min) was available, we supplied the 2EH feed from 55-gal drums. Two drums (about 400 liters of 2EH) were made available for the test. A constant-level overflow was arranged from the column circuit to a waste drum; thus, the alcohol exited from the column at the same rate that it was pumped to the column. Surfactant was added with the incoming 2EH so that the concentration was the same for both the entering and the exit streams. The surfactant concentration thus remained constant in the system.

6.8 Procedure for Operating the Dryer

The procedure for operating the new dryer was developed during the second campaign. It is described below.

(1) After filling the dryer, apply pressure (with argon) above the dryer bed. Arrange the valves so that they will drain excess 2EH from the bottom of the dryer through the visible discharge pot. Purge until the 2EH stops flowing through the pot. Set the humidified argon purge to 2 liters/min, and hold this purge rate throughout the drying cycle.

(2) Set the temperature controllers for peripheral and tubular heaters at 115°C. (Note that these set points represent the temperatures of the heating surfaces.) Allow the temperature to rise and equilibrate; this will require about 7 hr. The recorder temperatures for the dryer will stabilize between 102 and 110°C. These latter readings are temperatures of the bed and of the inner dryer surfaces.

(3) Admit steam to the humidified argon stream at an initial rate of 5 g/min. Shut off the power to all heaters.

(4) Carefully watch the temperature recorder. The bed (lowest recorded) temperature will start to rise 2 to 5 min after the beginning of steam addition. When the temperature increases to 130°C, shut off the steam immediately and leave it off until the temperature decreases to 115°C. The 130°C temperature is apparently a "threshold" level, where excursions can initiate. If the temperature increases above 130°C, turn coolant onto the cooling coil immediately until the temperature returns to 115°C.

NOTE: Temperature excursions can occur at any time (up to 200°C) during the drying cycle, but they most often occur during the period of particle surface hydration. A sharp rise in temperature is evidence of the initiation of an excursion. In the event that such a rise occurs, the coolant must be turned on. No harm is done if a batch is cooled and reheating is required. An excursion, on the other hand, can destroy the entire batch of product. The temperature recorder must be watched constantly until the batch reaches its final temperature of 200°C. If an excursion occurs, the coolant must be turned on (and the power turned off) immediately.

(5) Repeat step 4 until no increase in temperature occurs when steam is admitted to the bed. This operation requires constant attention for about 2 hr.

(6) Increase the steam admission rate successively to 10, 20, and, finally, 25 g/min, making sure that no temperature rise occurs after each increase. If a rise occurs, return to the next lower rate and proceed as already outlined.

(7) Raise the set points on both sets of heaters to 135°C and continue purging the bed with steam-argon until 20 kg of steam has passed through it.

(8) Hold the temperature constant for 1 hr after the steam purging is completed; then raise the control points to 150°C. Continue to watch the recorder for indications of an excursion. Hold at 150°C for 2 hr.

(9) Repeat step 8 at 175°C and at 210°C.

(10) Switch from humidified argon to dry argon at 210°C, and purge the bed for 4 hr.

(11) Cool to room temperature under argon and empty. A complete dryer cycle requires about 42 hr, allowing time for refilling, unloading, and other necessary interrun operations.

6.9 Procedure for Operating the Calciner

A thermocouple was mounted through one of the three entry tubes at the top of the calcining flask. The gas entry tube was placed in the second. Asbestos string was packed around both the thermocouple and the gas entry tube to effect a gas seal. These items remained in position throughout the calciner runs. The previously weighed microsphere charge was simply poured into the flask through a funnel inserted into the third tube. After the microspheres had been charged, the funnel was removed, and the tube was plugged with a plug of asbestos tape.

After calcination, the microspheres were removed by using a metal lance attached to a common three-liter laboratory vacuum flask. The lance was lowered through the charging tube atop the flask, and the microspheres were drawn into the vacuum flask.

These procedures simulate our concept of charging and emptying the calciner in a remote operation.

The time — temperature — gas sequence used in the calciner operation was as follows:

(1) Set the temperature controllers at 700 to 800°C; turn on the power, and leave overnight. Set the air flow to the calciner bed to 4 liters/min.

(2) Raise the set points on the temperature controllers to 1150°C, and allow the temperature to rise to, and equilibrate at, this level. Bed temperatures should actually fall within the 1150 to 1200°C range. Adjust the controllers as necessary.

(3) Turn off the air flow to the bed. Turn on the argon - 4% hydrogen flow, and, based on the amount of uranium present, adjust it so that a tenfold excess of hydrogen will flow through the bed during the following 4 hr.

(4) Hold the temperature of the bed at 1150°C for 4 hr.

(5) Turn off the power, and switch from argon - 4% hydrogen to argon. Set the argon rotameter at 4 liters/min.

(6) When the bed temperature falls below 100°C, draw the product microspheres into the vacuum flask.

(7) Weigh the product, and record its weight.

ORNL-4544
UC-25 — Metals, Ceramics, and Materials

INTERNAL DISTRIBUTION

1. Biology Library
2-4. Central Research Library
5. ORNL — Y-12 Technical Library
Document Reference Section
6. MIT Practice School
7-42. Laboratory Records Department
43. Laboratory Records, ORNL R.C.
44. R. E. Adams
45. G. M. Adamson
46. L. G. Alexander
47. J. W. Anderson
48. S. E. Beall
49. E. S. Bomar
50. W. D. Bond
51. G. E. Boyd
52. R. A. Bradley
53. R. J. Braatz
54. R. E. Brooksbank
55. K. B. Brown
56. F. R. Bruce
57. W. D. Burch
58. D. O. Campbell
59. W. L. Carter
60. J. M. Chandler
61. S. D. Clinton
62. C. F. Coleman
63. J. H. Coobs
64. L. T. Corbin
65. D. J. Crouse
66. F. L. Culler
67. J. E. Cunningham
68. F. L. Daley
69. H. J. de Nordwall
70. W. P. Eatherly
71. J. I. Federer
72. D. E. Ferguson
73. L. M. Ferris
74. B. C. Finney
75. R. B. Fitts
76. J. R. Flanary
77. J. H Frye, Jr.
78. F. J. Furman
79. F. M. Glass
80. H. W. Godbee
81. H. E. Goeller
82. T. L. Golson
83. A. T. Gresky
84. P. A. Haas
85. R. G. Haire
86. R. L. Hamner
87. W. O. Harms
88. F. E. Harrington
89-98. C. C. Haws, Jr.
99. D. M. Hewette
100. R. F. Hibbs
101. R. W. Horton
102. A. R. Irvine
103. S. I. Kaplan
104. F. A. Kappelmann
105-150. P. R. Kasten
151. M. T. Kelley
152. F. J. Kitts
153. J. M. Leitnaker
154. R. E. Leuze
155. T. B. Lindemer
156. C. S. Lisser
157. M. H. Lloyd
158. E. L. Long, Jr.
159-160. A. L. Lotts
161. R. S. Lowrie
162. J. P. McBride
163. K. H. McCorkle
164. W. T. McDuffee
165. J. R. McWherter
166. A. B. Meservey
167. J. G. Moore
168. L. E. Morse
169. E. A. Nephew
170. J. P. Nichols
171. E. L. Nicholson
172. K. J. Notz
173. A. R. Olsen
174. J. R. Parrott
175. W. A. Pate
176. P. Patriarca
177. W. L. Pattison
178. W. H. Pechin
179. J. W. Prados
180. J. T. Roberts
181. J. M. Robbins
182. A. D. Ryon
183. J. L. Scott
184. J. D. Sease
185. L. B. Shappert

186. M. J. Skinner
187. J. W. Snider
188. M. G. Stewart
189. D. A. Sundberg
190. O. K. Tallent
191. E. H. Taylor
192. I. L. Thomas
193. D. B. Trauger
194. W. E. Unger
195. V. C. A. Vaughen
196. T. N. Washburn
197. C. D. Watson
198. A. M. Weinberg
199. M. E. Whatley
200-209. R. G. Wymer
210. P. H. Emmett (consultant)
211. J. J. Katz (consultant)
212. E. A. Mason (consultant)
213. R. B. Richards (consultant)

EXTERNAL DISTRIBUTION

214. J. E. Ayer, Argonne National Laboratory, Argonne, Illinois
215. E. E. Bain, Nuclear Fuel Service, Erwin, Tennessee
216. R. H. Ball, RDT, OSR, P.O. Box 2325, San Diego, California
217. R. S. Bodsky, Division of Naval Reactors, Atomic Energy Commission, Washington, D.C.
218. A. R. Boettcher, Director, Julich Nuclear Research Center, Julich, Germany
219. L. H. Brooks, Gulf Energy and Environmental Systems, Inc., P.O. Box 608, San Diego, California 92112
220. J. A. Buckham, Manager, Chemical Technology Branch, Idaho Nuclear Corporation, P.O. Box 1845, Idaho Falls, Idaho
221. L. J. Colby, Jr., Gulf Energy and Environmental Systems, Inc., P.O. Box 608, San Diego, California 92112
222. P. Clark, Atomic Energy Commission, Washington, D.C.
223. D. F. Cope, RDT, SSR, Oak Ridge National Laboratory
224. J. Crawford, Atomic Energy Commission, Washington, D.C.
225. G. W. Cunningham, Atomic Energy Commission, Washington, D.C.
226. Donald de Halas, WADCO, P.O. Box 1970, Richland, Washington
227. W. Devine, Jr., Production Reactor Division, P.O. Box 550, Richland, Washington
228. E. W. Dewell, Babcock and Wilcox Company, Lynchburg, Virginia
229. S. E. Donelson, Gulf Energy and Environmental Systems, Inc., P.O. Box 608, San Diego, California 92112
230. J. J. Fardy, Australian Atomic Energy Commission, Lucas Heights, Sydney, Australia
231. R. Forthmann, KFA, Julich, West Germany
232. R. H. Graham, Gulf General Atomic, San Diego, California 92112
233. J. S. Griffo, Atomic Energy Commission, Washington, D.C.
234. N. Haberman, RDT, Atomic Energy Commission, Washington, D.C.
235. C. J. Hardy, Australian Atomic Energy Commission, Lucas Heights, Sydney, Australia
236. M. E. A. Hermans, KEMA, The Netherlands
237. P. G. Holstead, RDT, OSR, P.O. Box 550, Richland, Washington
238. S. Jaye, Gulf General Atomic, San Diego, California 92112
239. Julich Nuclear Research Center Library, Julich, Germany
240. Donald Keller, Battelle Memorial Institute, Columbus, Ohio
241. M. A. Khan, Division of Nuclear Power and Reactors, International Atomic Energy, Karntner Ring 11, 1010 Vienna, Austria

242. E. S. Lane, AERE, Harwell, England
243. K. Laughan, RDT, OSR, Oak Ridge National Laboratory
244. Librarian, Department of Chemical Engineering and Chemical Technology, Imperial College, Prince Consort Road, London, S.W. 7, England
245. S. Marshall, National Lead Company of Ohio, Cincinnati, Ohio
246. C. L. Matthews, RDT, OSR, Oak Ridge National Laboratory
247. G. L. Mercer, Division of International Affairs, Atomic Energy Commission, Washington, D.C.
248. E. R. Merz, Director, Institute of Chemical Technology, KFA, Julich, West Germany
249. T. McIntosh, Atomic Energy Commission, Washington, D.C.
250. W. H. McVey, Atomic Energy Commission, Washington, D.C.
251. E. C. Moncrief, Babcock and Wilcox Company, Lynchburg, Virginia
252. Peter Murray, Westinghouse Atomic Power Division, P.O. Box 355, Pittsburgh, Pennsylvania
253. R. E. Norman, Gulf General Atomic, San Diego, California 92112
254. Giuseppe Orsenigo, CNEN, Via Belisario 15, Rome, Italy
255. R. E. Pahler, Atomic Energy Commission, Washington, D.C.
256. R. L. Philippone, RDT, OSR, Oak Ridge National Laboratory
257. R. A. Proebstle, General Electric Company, KAPL, Schenectady, N.Y.
258. D. M. Rafi, Pakistan Institute of Nuclear Science and Technology, P.O. Box Nilore, Rawal Pindi, Pakistan
259. W. H. Regan, Atomic Energy Commission, Washington, D.C.
260. C. W. Richards, Atomic Energy Commission, Canoga Park, California
261. J. A. Rode, United Nuclear Corporation, Hematite, Missouri
262. R. Rometsch, Eurochemic, Mol, Belgium
263. Hugo Schumacher, EIR, CH-5303, Wurenlingen, Switzerland
264. M. Shaw, Atomic Energy Commission, Washington, D.C.
265. L. R. Shepherd, Chief Executive, Dragon Project, AEER Winfrith, Dorchester, Dorset, England
266. Atou Shimozato, Nuclear Reactor Design Section, Nuclear Power Plant Department, Hitachi Ltd., Hitachi Works, Hitachi-Shi, Ibarki-Ken, Japan
267. J. M. Simmons, Division of Reactor Development and Technology, Atomic Energy Commission, Washington, D.C.
268. E. E. Sinclair, Atomic Energy Commission, Washington, D.C.
269. H. B. Stewart, Gulf General Atomic, San Diego, California 92112
270. C. L. Storrs, HPO-AI/CE, P.O. Box 309, Canoga Park, California
271. A. A. Strasser, United Nuclear Corporation, 5 New Street, White Plains, New York
272. J. A. Swartout, Union Carbide Corporation, New York, N.Y. 10017
273. S. Strausberg, Gulf General Atomic, San Diego, California 92112
274. L. V. Trigianni, W. R. Grace and Company, Washington Research Center, Clarksville, Maryland
275. C. A. Trilling, Atomics International, Canoga Park, California
276. R. P. Varnes, Combustion Engineering, Windsor, Connecticut
277. B. L. Vondra, NUMEC, Apollo, Pennsylvania
278. B. F. Warner, United Kingdom Atomic Energy Authority, Production Group, Windscale and Calder Works, Sellafield, Seascale, Cumberland, England

279. M. J. Whitman, Atomic Energy Commission, Washington, D.C.
280. Guenther Wirths, NUKEM, Hanau, West Germany
281. H. O. G. Witte, Julich Nuclear Research Center, Julich, Germany
282. E. L. Zebroski, General Electric Company, 310 DeGuigne Drive, Sunnyvale, California
283. M. Zifferero, CNEN, Institute de Chemical Farmacentica e Tossicologica dell 'Universita, Piazzale delle Scienze, 5, Rome, Italy
284. Laboratory and University Division, AEC, ORO
285. Patent Office, AEC, ORO

286-480. Given distribution as shown in TID-4500 under Metals, Ceramics, and Materials category (25 copies — NTIS)