CENTRAL RESEARCH LIBRARY

OAK RIDGE NATIONAL LABORATORY
OPERATED BY
UNION CARBIDE CORPORATION
NUCLEAR DIVISION
POST OFFICE BOX X
OAK RIDGE, TENNESSEE 37830

ORNL-MIT- 138
Cy 34

DATE: November 23, 1971 COPY NO.

SUBJECT: Total Energy Analysis of Nuclear and Fossil Fueled Power Plants

AUTHOR: W.D. Franklin, Michael Mutsakis, and R.G. Ort*

Consultant: L.L. Bennett

ABSTRACT

The overall thermal efficiencies of electrical power generation were determined for Liquid Metal Fast Breeder, High Temperature Gas Cooled, Boiling Water, and Pressurized Water Reactors and for coal-, oil-, and gas-fired systems. All important energy consuming steps from mining through processing, transporting, and reprocessing the fuels were included in the energy balance along with electrical transmission and thermal losses and energy expenditures for pollution abatement.

The results of these studies show that the overall fuel cycle efficiency of the light water nuclear fueled reactors is less than the efficiency of modern fossil fuel cycles. However, the nuclear fuel cycle based on the fast breeder reactors should produce power more efficiently than the most modern supercritical fossil fuel cycles. The high temperature gas cooled reactor has a cycle efficiency comparable to the supercritical coal fuel cycle.

CENTRAL RESEARCH LIBRARY
DOCUMENT COLLECTION
LIBRARY LOAN COPY
DO NOT TRANSFER TO ANOTHER PERSON
If you wish someone else to see this document, send in name with document and the library will arrange a loan.

*Revised by J.T. Day [redacted]

Oak Ridge Station
School of Chemical Engineering Practice
Massachusetts Institute of Technology

[redacted]

Released for LRD
5/18/76

Contents

Page

1. Summary 5
2. Introduction 6
3. Fossil Fuel Cycles 7
   3.1 Introduction 7
   3.2 Fuel Requirements 7
      3.2.1 Fuel Extraction 9
      3.2.2 Desulfurization of Fossil Fuels 9
      3.2.3 Transportation of Fossil Fuels 12
      3.2.4 Summary of Energy Usage in Fossil Fuel Cycles 13
4. Nuclear Fuel Cycles 13
   4.1 Introduction 13
   4.2 Thermal Converter Reactors 13
   4.3 Liquid Metal Fast Breeder Reactor 19
   4.4 Nuclear Fuel Preparation 19
      4.4.1 Uranium Mining 19
      4.4.2 Uranium Milling 19
      4.4.3 Conversion of Yellow Cake to UF_6 20
      4.4.4 Uranium Enrichment 21
      4.4.5 Reconversion and Fuel Preparation 22
      4.4.6 Fuel Element Fabrication 24
      4.4.7 Reprocessing and Waste Disposal 26
      4.4.8 Credit for Stored Plutonium 27
      4.4.9 Conversion of Recovered Uranium to UF_6 28
      4.4.10 Transportation 28

Contents (continued)

Page

5. Other Energy Consumption 28

5.1 Power Plant Waste Heat 28

5.2 Transmission Losses 30

6. Results and Conclusions 30

7. Acknowledgements 31

8. Appendix 32

8.1 Heat and Fuel Requirements for Fossil Fueled Plants 32

8.2 Control of Particulate Matter at Fossil Fueled Plants 32

8.3 Coal Handling Costs 33

8.4 Coal Mining 33

8.5 Crude Oil and Natural Gas Produced 36

8.6 Sulfur Dioxide Controls for Coal Fired Plants 36

8.7 Desulfurization of Natural Gas 37

8.8 Desulfurization of Residual Oil 37

8.9 Uranium Mining 39

8.10 Uranium Milling 39

8.11 Alternate Methods to Evaluate Plutonium Credit 40

8.12 Power Losses 41

8.13 Transportation 42

8.14 Energy Consumption in Chemical Production 48

8.15 Summary of Energy Consumption 50

8.16 Literature References 55

1. SUMMARY

Energy balances around nuclear and fossil fuel cycles have been performed to characterize them on the basis of total energy expended to produce a unit of useful electrical energy at the point of consumption. The power cycles evaluated were coal-, gas-, and oil-fueled plants and generation systems based on nuclear fuels: Boiling Water (BWR), Pressurized Water (PWR), High Temperature Gas Cooled (HTGR), and Liquid Metal Fast Breeder Reactors (LMFBR). The energy inputs to the power generating cycles included the energy expended in mining, processing, transporting, and reprocessing the fuels along with the energy losses in thermal discharges, pollution abatement, and electrical transmission.

The results are summarized in Table 1. It can be seen that the overall operating efficiencies of current light water reactor (BWR and PWR) power plants are lower than current fossil-fueled plants. However, the fast breeder reactors, not yet in existence, should produce power more efficiently than the most modern fossil-fueled power plants.

The major factors causing low overall efficiencies were determined to be: (1) the thermodynamic inefficiencies of the operating temperatures, (2) losses incurred in the transmission of electrical power, and (3) in the case of converter reactors, enrichment of fuel by gaseous diffusion. Energy consumed by other inputs were minimal in comparison.

Table 1. Overall Thermal Efficiencies of Power Plants

Plant Type	Central Plant Efficiency (%)	Net Fuel Cycle Efficiency (%) With Once-Thru Cooling	Net Fuel Cycle Efficiency (%) With Cooling Towers
Fossil Fuel			
Coal	35.26	30.01[a] 30.08[b]	29.11[a] 29.17[b]
Oil	35.26	29.78	28.89
Gas	35.26	31.01	30.08
Coal	40.0	34.04[a] 34.12[b]	33.02[a] 32.17[b]
Oil	40.0	33.78	32.77
Gas	40.0	35.19	34.13
Nuclear			
BWR	32.5	28.25	27.40
PWR	32.5	28.00	27.16
HTGR	38.7	34.05	33.03
LMFBR	40.0	36.43	35.34

[a]underground mining of coal

[b]surface mining of coal

2. INTRODUCTION

Energy has long been considered one of the key factors in the promotion and support of a nation's economic growth. To meet the projected demand (9%/yr) the Federal Power Commission estimates that 300 additional electric power plants [3000 MW(e)/station] will have to be built within the next twenty years. The additional land required for electrical transmission alone will be seven million acres (2).

The problem is further complicated by the increasing concern for the environmental and economic impact of electrical generation systems. In the location and design of new facilities, the engineer must assess all socio-economic and ecological constraints.

Generally power systems are compared on the lowest unit cost to produce electricity, on the thermal efficiencies, the type of fuels used, and/or the pollution aspects of the fuel cycle. Since the fuel supplies are finite, the various fuel systems should be characterized on a basis of total energy expended to produce a useful unit of electrical energy at the point of consumption. The energy inputs to a power generating cycle include the energy expended in mining, processing, transporting, and reprocessing the fuels along with the energy losses associated with thermal discharges, pollution abatement, and electrical transmission, in addition to the energy used in power plant operation.

Energy expenditures in the production of electricity have been estimated to provide information in overall evaluations of the relative merit of alternative power plant types. In this study the nuclear fuel cycles for the Boiling Water (BWR), Pressurized Water (PWR), High Temperature Gas Cooled (HTGR), and Liquid Metal Fast Breeder Reactors (LMFBR) were treated. Fossil fuel cycles for coal-, oil-, and gas-fired power plants were studied. All the cycles analyzed are presented in Table 2.

Table 2. Power Plant Characteristics

Plant Type	Generating Capacity [MW(e)]	Assumed Load Factor (%)	Plant Efficiency (%)* Current National Average	Plant Efficiency (%)* Super-critical Plants
Fossil				
Coal	1000	80	35.26	40.0
Gas fired	1000	80	35.26	40.0
Oil fired	1000	80	35.26	40.0
Nuclear				
Boiling Water Reactor (BWR)	1000	85	32.5	
Pressurized Water (PWR)	1000	85	32.5	
High Temp. Gas Cooled Reactor (HTGR)	1160	80	38.7	
Liquid Metal Fast Breeder Reactor (LMFBR)	1000	85	40.0	

*Based on once-through cooling; with cooling towers plant electrical capability reduced approximately 3% (see Appendix 8.12).

All power cycles were analyzed on the basis of a year's operation at either 80 or 85% of full capacity with 1000 MW(e) generating capacity, except for the HTGR which was based on a 1160 MW(e) capacity. Since the results are presented in terms of a standard unit of electrical energy at the point of consumption, variations in plant size and load factor do not influence the comparisons. Since the current national average for fossil-fueled plants is 35.26%, the analysis is presented for this efficiency as a reference along with the 40% central plant efficiency which represents the most modern fossil-fueled supercritical steam plants being constructed today (4). A discussion of a modern steam plant is included in the description of the fossil fuel cycles. Since all the nuclear power systems except the LMFBR involve the same processes, they are analyzed together. Large thermal discharges and transmission losses are associated with all central station power plants and are covered in separate sections. Since the use of cooling towers reduces the plant thermal efficiency, the data presented in Table 2 must be modified for the cooling tower effects (see Appendix 8.12).

3. FOSSIL FUEL CYCLES

3.1 Introduction

Although fuel extraction, transportation, and desulfurization are dependent on fuel type, the basic essentials of a conventional steam plant are similar for all fuels consumed. A schematic flowsheet with an illustrative heat balance (35.26% thermal efficiency) for a typical modern fossil-fueled power plant is shown in Fig. 1. It can be seen that the largest heat loss in a steam plant occurs in the condensation of the low pressure steam from the turbine. A significant amount of heat is also lost in the flue gas leaving the stack; however, if the stack gases were overcooled, the corrosive combustion products would condense in the stack and atmospheric dispersion of the flue gases might be incomplete.

The internal operation of a power plant requires approximately 5% of the gross electric output. This includes energy used in fuel handling, particulate removal from flue gases, and miscellaneous power plant consumptions. This energy consumption does not include the operation of cooling towers. Coal plants require extensive coal storage, conveying and pulverizing equipment; whereas oil-burning and gas-burning stations simply require pumps, valves, and spray nozzles (see Appendices 8.2 and 8.3).

3.2 Fuel Requirements

The initial step in analyzing the energy inputs of a fossil-fueled plant is the calculation of heat and fuel requirements. Two central power plant conversion efficiencies were considered: (1) 35.26%, the average efficiency of plants in use today and (2) 40%, the efficiency of modern supercritical steam cycles. For a 1000-MW(e) plant operating at 80% capacity, the

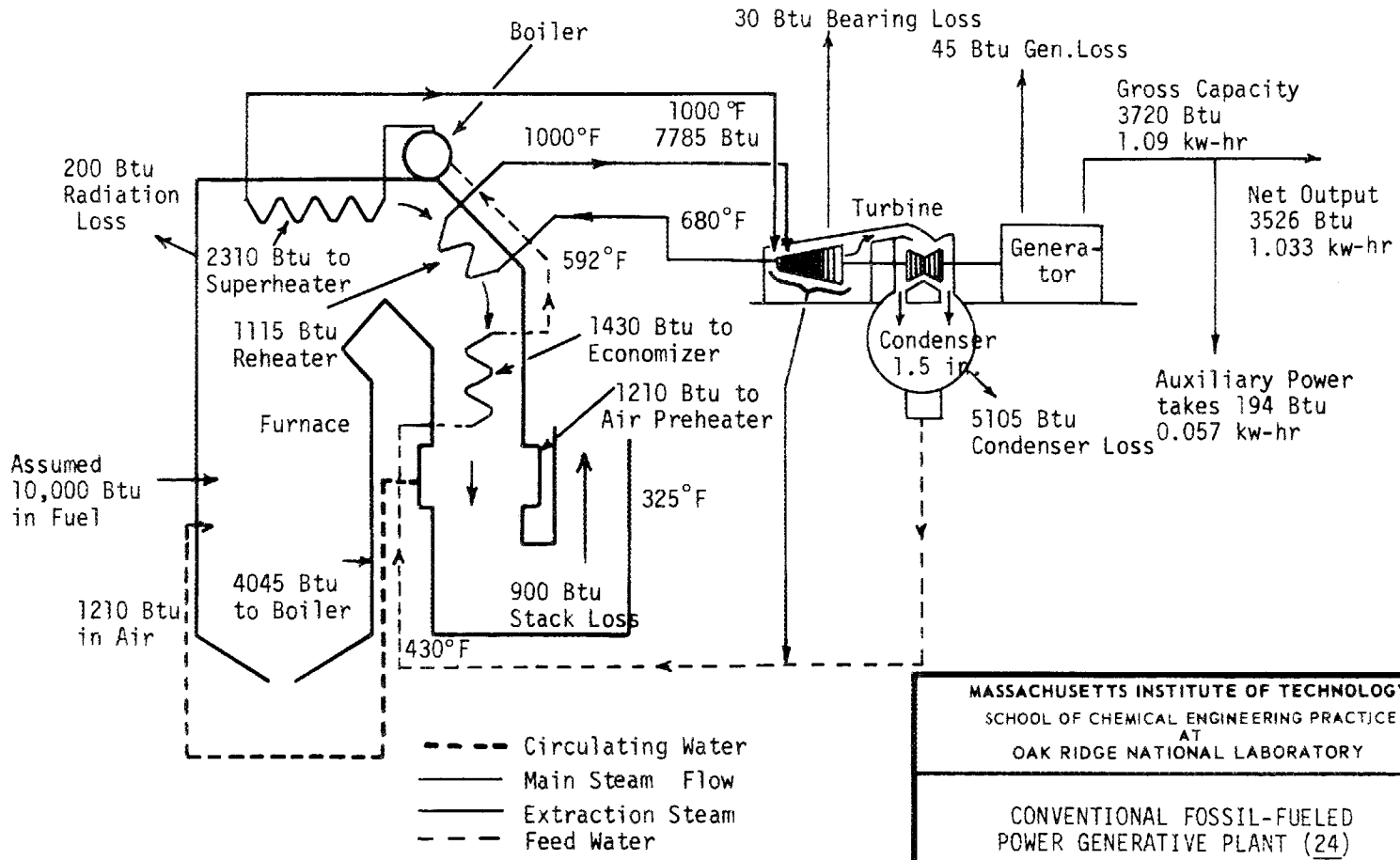

MASSACHUSETTS INSTITUTE OF TECHNOLOGY
SCHOOL OF CHEMICAL ENGINEERING PRACTICE
AT
OAK RIDGE NATIONAL LABORATORY

CONVENTIONAL FOSSIL-FUELED
POWER GENERATIVE PLANT (24)

DATE	DRAWN BY	FILE NO.	FIG.
		CEPS-X-138	1

energy and fuel consumptions for coal, gas, and oil are listed in Table 3 (see Appendix 8.1 for detailed calculations). The fuel requirements, based on heat rates, are also presented on a per MW(e) basis for the complete plant capacity. To facilitate the determination of the energy requirements of the fossil fuel cycles, the process was divided into suboperations: fuel extraction, desulfurization, and transportation.

3.2.1 Fuel Extraction

3.2.1.1 Coal Mining. Currently two-thirds of the coal produced is by underground mining with the remainder being by surface or strip mining (81). Underground mining basically involves: (1) mechanically undercutting or top cutting the coal seam, (2) blasting down the face, and (3) mechanically loading shuttle cars or conveyors for transporting away from the face. A major portion of a mine's energy consumption is expended on proper ventilation. Strip mining involves removing the material overlying a coal bed and loading the uncovered coal by various types of earth-moving equipment.

The energy expended in coal mining is detailed in Table 4 for both thermal and electrical consumption. The energy is based on the production figures for 1963 when 99.8×10^{12} Btu(t) and 6.3×10^{6} MWh(e) (60) were consumed to produce coal equivalent to $16{,}473 \times 10^{12}$ Btu(t) (61). The energy consumed by both strip mining and underground mining were calculated assuming a relative consumption ratio (see Appendix 8.4 for additional details).

3.2.1.2 Oil and Natural Gas Production. After the initial drilling of an oil well, the crude petroleum and gas either flow naturally or are pumped from the ground. The gas is then separated and stored for future distribution. For the year 1963 the energy consumed to produce $34{,}715 \times 10^{12}$ Btu(t) (62) of crude petroleum and natural gas was 208.4×10^{12} Btu(t) and 6.3×10^{6} MWh(e) (60). Since both oil and gas are often found together and have the same method of extraction, it was assumed that equal energy was required to produce a Btu of natural gas and a Btu of crude petroleum (see Appendix 8.5 for more detailed calculations). The total energy consumed in production of a year's supply of natural gas and crude petroleum is shown in Table 5. Since residual fuel oil is essentially a byproduct of the oil refining process, it was assumed that all the energy consumed in refining should be charged to other products. Therefore no energy charge for refining was assessed to fuel oil production.

3.2.2 Desulfurization of Fossil Fuels

3.2.2.1 Coal. Since the removal of sulfur from coal prior to combustion is difficult with present-day technology, removal of the sulfur as SO_2 in the flue gas will be considered in this report. Although not presently used, there are several possible SO_2 abatement processes. Both the wet and dry processes involve alkali absorbers.

Since the wet scrubbing processes with a limestone slurry appear to have high SO_2 removal efficiencies, the energy consumed in this procedure will be selected as the basis for sulfur removal. The energy consumed in desorbing the SO_2 and reheating the cooled, saturated stack gases to 175-250°F, is high; 2150×10^{6} Btu for each megawatt of power (57). In addition, the high energy scrubbing requires sizable pumping and blower capacity to

Table 3. Yearly Fuel Requirements of Fossil-Fueled Plants

	Unit Energy Content of Fuel	35.26% Central Plant Efficiencies			40% Central Plant Efficiencies		
		Fuel Requirements per MW(e)-year	Requirements at 80% of Capacity		Fuel Requirements per MW(e)-year	Requirements at 80% of Capacity	
			Energy (Btu/yr)	Fuel		Energy (Btu/yr)	Fuel
Coal	26.2×10^6 Btu/ton	3238 tons	6.789×10^{13}	2.59×10^6 ton/yr	2853 tons	5.984×10^{13}	2.26×10^6 ton/yr
Natural Gas	1035 Btu/scf	8.2×10^7 scf	6.789×10^{13}	6.56×10^{10} scf/yr	71.9×10^6 scf	5.984×10^{13}	5.75×10^{10} scf/yr
Fuel Oil	6.29×10^6 Btu/bbl	13,500 barrels	6.789×10^{13}	1.08×10^7 bbl/yr	11,900 barrels	5.984×10^{13}	9.52×10^6 bbl/yr

Table 4. Energy Consumed in Mining Coal

	Per Ton of Coal Mined		Per Btu Mined		Per MW(e)-yr of Power Plant Operation*	
	Thermal (Btu)	Electrical [MWh(e)]	Thermal (Btu)	Electrical [MWh(e)]	Thermal (Btu)	Electrical [MWh(e)]
Strip Mining	0.17×10^6	0.003	0.0065	1.14×10^{-10}	4.8×10^8	8.5
Underground Mining	0.23×10^6	0.004	0.0087	1.52×10^{-10}	6.5×10^8	11.3

*40% Central Power Plant Efficiency - Full Capacity

Table 5. Energy Consumed in Crude Oil and Natural Gas Production

Fuel	Per Barrel of Oil or 1000 scf of Gas		Per Btu Produced		Per MW(e)-year of Power Plant Operation*	
	Thermal (Btu)	Electrical [MWh(e)]	Thermal (Btu)	Electrical [MWh(e)]	Thermal (Btu)	Electrical [MWh(e)]
Gas	6,200	7.1×10^{-5}	0.006	6.9×10^{-11}	4.5×10^8	5.1
Oil	37,740	4.3×10^{-4}	0.006	6.9×10^{-11}	4.5×10^8	5.1

*40% Central Power Plant Efficiency - Full Capacity

provide efficient operation. The power usage has been estimated at 200 MW(e)/MW(e)-yr for a 40% efficiency plant.

3.2.2.2 Natural Gas. Natural gas at the well head is assumed to contain 0.5 vol % hydrogen sulfide which is scrubbed from the natural gas with an amine solution. The power consumption to run the amine sulfur units is assumed to be 0.5 kWh(e)/scf of hydrogen sulfide. Thermal energy usage is assumed to be 90 Btu/scf of hydrogen sulfide for amine regeneration (58). The hydrogen sulfide is converted to elemental sulfur and the amine solution is recycled to the process. These usages per 1000 scf of natural gas are 2.5 kWh(e) and 450 Btu(t).

3.2.2.3 Residual Fuel Oil. The desulfurization of fuel oil involves a mild selective hydrogenation. The sulfur is removed as hydrogen sulfide and the remaining hydrocarbon part of the molecule is hydrogenated. The reaction takes place in a high pressure reactor at temperatures of 400 to 500°F in the presence of a catalyst. The sulfur is removed as hydrogen sulfide and then scrubbed in an amine scrubber unit as in the case of natural gas.

All fuel oil is assumed to be hydrorefined to reduce the original content of 2.0 vol % sulfide to less than 0.3 wt % sulfur. The energy calculated for the desulfurization of fuel oil is 24,600 Btu(t)/bbl and 38.7 kWh(e)/bbl (57).

The energy consumed in the refinery to produce residual fuel oil is considered minimal. Residual petroleum products are basically byproducts of the regular refining operation and do not usually command high market prices.

The total energy consumed in desulfurizing fossil fuels is shown in Table 6 (see Appendices 8.6, 8.7, and 8.8).

Table 6. Energy Consumption to remove Sulfur from Fuel Oil and Natural Gas

	Per Barrel of Oil or 1000 scf of Gas		Per Btu Produced		Per MW(e)-Year of Power Plant Operation*	
Fuel	Thermal (Btu)	Electrical kWh(e)	Thermal (Btu)	Electrical kWh(e)	Thermal (Btu)	Electrical MWh(e)
Fuel oil	24,600	38.7	0.003	6.2×10^{-6}	2.93×10^{8}	460
Gas	450	2.5	0.0004	2.4×10^{-6}	32.5×10^{6}	181

*40% Central Power Plant Efficiency - Full Capacity

3.2.3 Transportation of Fossil Fuels

Fossil fuels are delivered to the power plants by either rail or barge for coal, pipelines for natural gas, and tankers for fuel oil. The energy consumed in transporting the fuels was calculated based on the number of net cargo ton-miles achieved and the efficiencies for various transport modes (Table 7). The cargo efficiencies are based on the return of empty carriers, where applicable. This information was derived from industry statistics for total annual cargo ton-miles and total annual fuel consumption for the respective modes of transportation.

Table 7. Cargo Transport Efficiencies for Various Modes (65)

Transportation Mode	Block Speed (mph)	Gross (ton miles/gal)	Cargo (ton miles/gal)
Large pipeline	5	500	500
Supertanker	16	1330	930
250-hp truck	50	100	50
100-car, 5000-ton freight train	40	500	250

The average distance for the movement of the fossil fuels was obtained from industrial data (5). As shown in Table 8, the movement of coal averages 300 miles. The major movement of fuel oil was assumed to be from Venezuela to the Northeast coast - a distance of 2000 miles. The energy consumption by the transportation system is based on 136,000 Btu/gal. Since approximately 75% of the coal in 1969 was transported by unit trains (5), the efficiency for this mode was used for all coal shipments in Table 8.

Table 8. Energy Consumed in Transporting Fossil Fuels

Fuel	Transportation Mode	Average Distance (miles)	Transport Efficiency (cargo-ton miles/gal)	Energy Used per MW(e)-year* (Btu)(t)
Coal	unit freight train	300	250	460×10^6
Fuel oil	supertanker	2000	930	580×10^6
Natural gas	pipeline	1000	500	515×10^6

*40% Central Power Plant Efficiency - Full Capacity

3.2.4 Summary of Energy Usage in Fossil Fuel Cycles

The energy usage of the fossil fueled plants is shown in Table 9 for the respective operations.

4. NUCLEAR FUEL CYCLES

4.1 Introduction

The fuel cycles for the PWR, BWR, and HTGR basically involve the same processes (see Figs. 2, 3, and 4). The mass flows shown on the schematics represent once-through cooling. For plants using cooling towers the rates would be higher due to the lower thermal efficiencies. The LMFBR differs in that its fuel consists of plutonium and depleted uranium. Thus, the only processing steps required are the preparation and fabrication of the fuel core and blanket (see Fig. 6). The following are brief descriptions of the nuclear fuel cycles evaluated. The energy used in mining, milling, transporting, preparing, and recycling the fuel will be estimated.

4.2 Thermal Converter Reactors

For the PWR, BWR, and HTGR the uranium ore is mined, milled, and concentrated as U_3O_8. The resulting "yellow cake" is converted to UF_6 for enrichment by the gaseous diffusion process from an initial ^{235}U concentration of 0.71% to 3-4% for the water reactors and 93% for the HTGR. The enriched uranium is then converted to a ceramic material, UO_2.

For the PWR and BWR, cylindrical UO_2 pellets are formed and loaded into long zirconium alloy tubes. Fuel assemblies constructed from many fuel tubes are loaded into the reactor to provide thermal fission from energy which in turn provides steam to drive the turbine-generator. The spent fuel assemblies are reprocessed chemically to recover the uranium for return to the enrichment process and further electrical energy generation.

The PWR and BWR differ in the operating pressure of the light water moderator, 2200 psig and 1000 psig respectively. In addition, the PWR contains a second water-steam loop for the turbine-generator operation which operates at approximately 720 psig. Both reactors have about the same thermal efficiency of approximately 32.5%.

The HTGR uses 93% enriched uranium (UO_2) which is formed into small ceramic spheres with ThO_2. The tiny particles are embedded in a graphite matrix and formed into cylindrical rods, which are loaded into large graphite blocks in the HTGR. The helium gas heated from the fission reaction is exchanged against a secondary steam loop operating at approximately 1000°F. The spent fuel is reprocessed chemically to recover the uranium and valuable isotopes before refabrication of fuel elements.

Table 9. Energy Consumed by Fossil Fired Plants
[per MW(e)-Year of Plant Operation on Full Capacity Basis]

	Coal Fired Plants							
	Strip Mining		Underground Mining		Gas Fired		Oil Fired	
	10^6 Btu(t)	MWh(e)	10^6 Btu(t)	MWh(e)	10^6 Btu(t)	MWh(e)	10^6 Btu(t)	MWh(e)
35.26% Efficiency								
Extraction	545	9.6	737	12.8	510	5.8	510	5.8
Transportation	522	-	522	-	584	-	638	-
Desulfurization	2,439	227	2,439	227	36.7	205	332	522
Plant Operation	83,965	-	83,965	-	83,965	-	83,965	-
Total	87,471	236.6	87,663	239.8	85,095.7	210.8	85,445	527.8
40% Efficiency								
Extraction	480	8.5	650	11.3	450	5.1	450	5.1
Transportation	460	-	460	-	515	-	562	-
Desulfurization	2,150	200	2,150	200	32.4	181	293	460
Plant Operation	74,015	-	74,015	-	74,015	-	74,015	-
Total	77,105	208.5	77,275	211.3	75,012.4	186.1	75,320	465.1

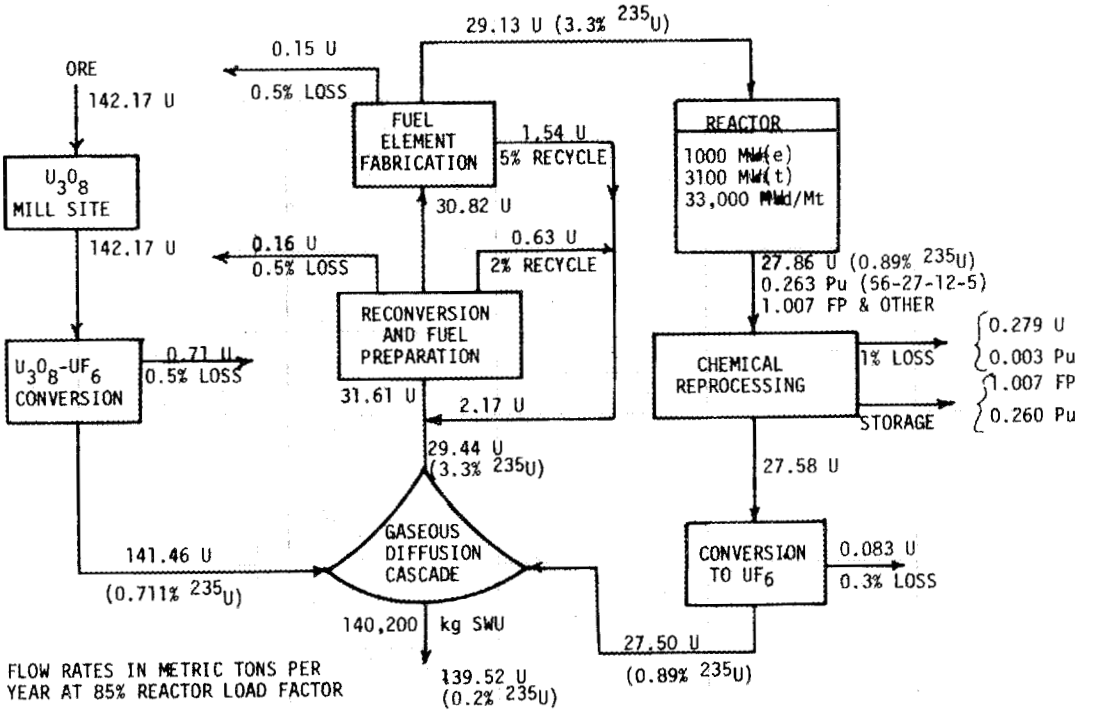

Fig. 2. TYPICAL PWR FUEL CYCLE AT EQUILIBRIUM (4)

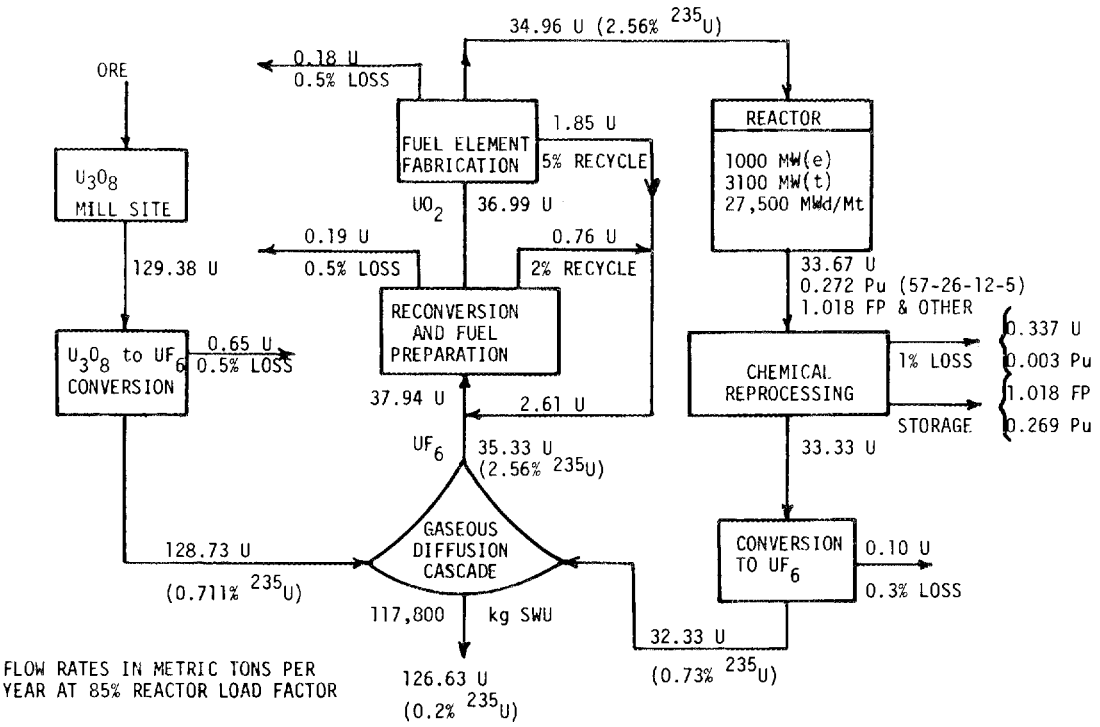

Fig. 3. TYPICAL BWR FUEL CYCLE AT EQUILIBRIUM (4)

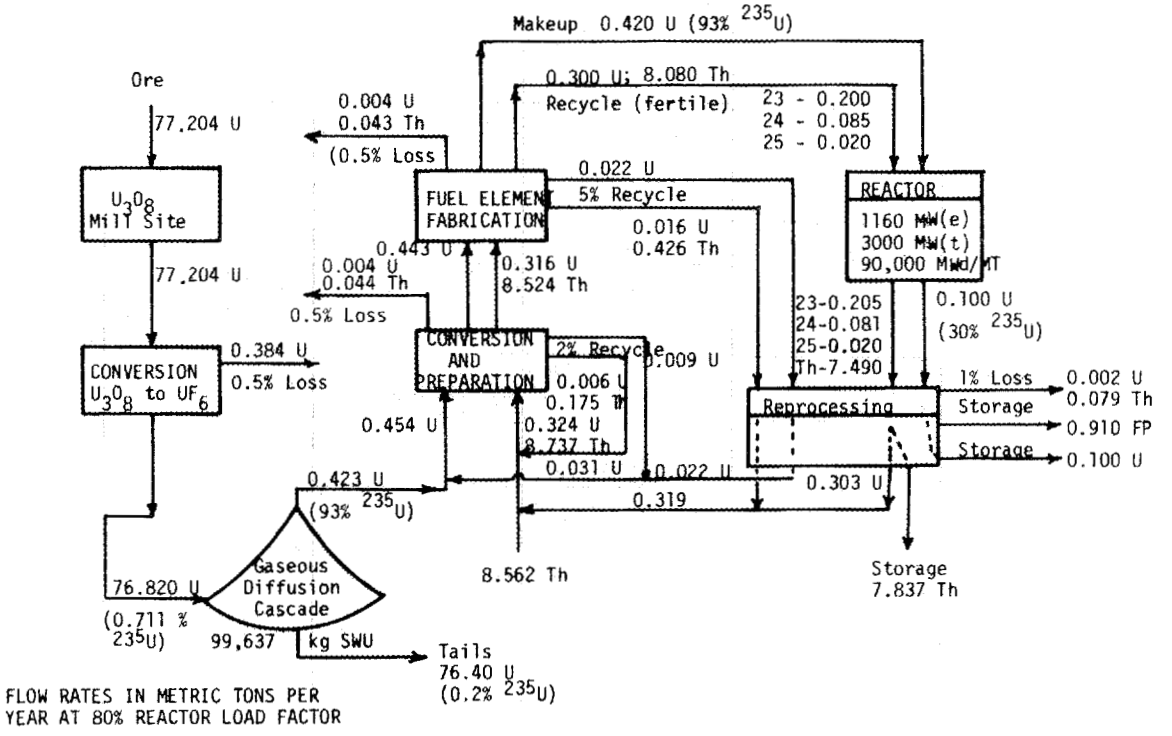

FLOW RATES IN METRIC TONS PER YEAR AT 80% REACTOR LOAD FACTOR

Fig. 4. TYPICAL HTGR FUEL CYCLE AT EQUILIBRIUM (11)

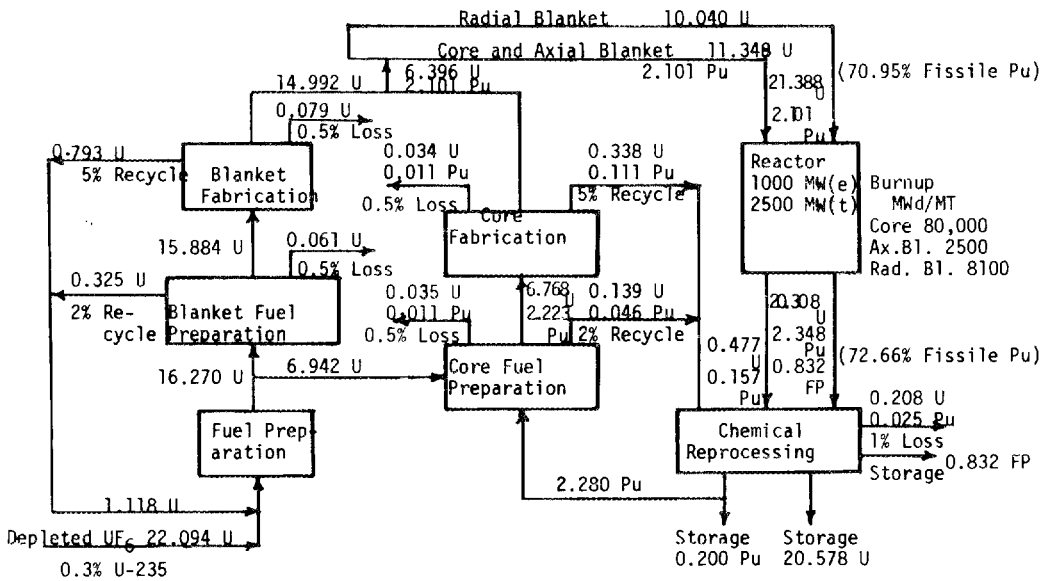

NOTE: Assuming availability of depleted U at 0.3% U-235:
Flow Rates: Metric Tons/Year at 85% Reactor Load Factor

Fig. 5. TYPICAL LMFBR FUEL CYCLE AT EQUILIBRIUM (59)

4.3 Liquid-Metal Fast Breeder Reactor

The LMFBR differs in that its fuel consists of plutonium and "depleted" uranium, ^{238}U. The plutonium is obtained from the chemical fuel recovery systems of the converter reactors and other breeder reactors. The depleted uranium can be obtained from the "tails" of the gaseous diffusion operations and therefore the only fuel processing steps involve the preparation of fuel pellets and fabrication of fuel assemblies. Since excess plutonium is obtained from breeder reactors, it can be used to "start up" additional reactors (either breeders or converters).

The LMFBR will use liquid sodium as the primary coolant due to its high thermal conductivity and heat capacity. However, in addition to a steam generator a secondary loop of sodium is used to decrease the chance of contamination. The use of sodium enables the production of high temperature steam and yields a thermal efficiency of 40%. Figure 6 shows the processes involved in the fuel cycle of a LMFBR.

The accompanying mass balances in Figs. 2, 3, 4, and 5 are considered representative and are used as the basis for estimating the energies associated with each fuel cycle.

4.4 Nuclear Fuel Preparation

4.4.1 Uranium Mining

Uranium is mined by underground and surface mining using equipment and methods similar to the mining of coal. Vein ores mined in the U.S.A. usually contain 0.20-1.0% U_3O_8. Estimated energy consumption in the extraction of uranium is based on two Bureau of Mines reports concerning individual uranium mines. The numbers reported were only for electrical consumption and may be somewhat conservative. The energy used in mining uranium is 13.6 - 20 kWh(e)/ton of crude ore (79, 80).

For an ore averaging 0.34% U_3O_8, approximately 345 short tons of ore must be mined per ton of uranium metal obtained, leading to an electrical energy usage of between 4700 to 6900 kWh(e)/short ton of uranium mined [$\sim$7.5 kWh(e)/kg uranium]. Since thorium and ^{238}U are byproducts of uranium mining, no energy requirements were assigned to these products.

4.4.2 Uranium Milling

Uranium is initially beneficiated by physical concentration methods (grinding and sizing, magnetic, electrostatic and flotation separations) to insure a constant feed of U_3O_8 to the chemical processes. The U_3O_8 is then extracted from the crude ore by leaching (acid or alkaline) and the pregnant solution is separated from the waste solids. The uranium bearing solutions

are then concentrated and purified by ion exchange and solvent extraction. Final recovery of the uranium from the solution is achieved by chemical precipitation. The resultant product, commonly referred to as yellow cake, is 95-98% U_3O_8.

The Anaconda Company's Bluewater Plant was used as the basis for determining amounts of solvents used in the milling process (40). Ore shipped to the mill ranges in grade from 0.25-0.6% U_3O_8, averaging 0.34% and the mill has a 97% recovery factor. Based on the ore assays and recoveries, approximately 356 short tons of ore must be processed to obtain one ton of uranium. The energy required to produce the chemicals consumed in the milling process is 1.35 kWh(e)/ton of ore and 7.91×10^4 Btu(t)/ton of ore. The general fuel requirements for uranium mills are 35 kWh(e) of electricity and 1.12×10^6 Btu of fuel per ton of ore (41) or 13.8 kWh(e) plus 4.5×10^5 Btu(t) per kilogram of uranium milled. The total energy expended in the mining and milling is shown in Table 10 (see Appendices 8.9 and 8.10 for more detailed calculations).

Table 10. Energy Consumed in Mining and Milling Uranium

Reactor Type	Kg of Uranium Required per Reactor MW(e)-yr	Energy Used in Mining kWh(e)/MW(e)-yr	Energy Used in Milling per MW(e)-yr	
			Thermal Btu(t) $\times 10^6$	Electrical kWh(e)
PWR	172	1310	77.4	2375
BWR	157	1195	70.6	2165
HTGR	86	655	38.7	1185
LMFBR	0	0	0	0

4.4.3 Conversion of Yellow Cake to UF_6

The yellow cake product of uranium mills must first be converted to UO_3 before it can be fluorinated to produce UF_6. UF_6 is required for feed to gaseous diffusion plants since it is the only uranium compound that is in the gaseous state at an operable temperature and pressure.

The mine concentrates (yellow cake) are blended and fed continuously to a nitric acid dissolver. The resulting uranyl nitrate hexahydrate $[UO_2(NO_3)_2 \cdot 6H_2O]$ is then purified and separated from the nitric acid by passing it through solvent extraction columns. The aqueous product is thermally decomposed in the presence of steam and cracked ammonia in electrically heated vessels to produce UO_3 powder:

$$UO_2(NO_3)_2 \xrightarrow[\Delta]{} UO_3 + 2NO_x(g)$$

The waste stream from solvent extraction is processed for recovery of 75% of its nitric acid, with the remainder being neutralized for disposal. The production of necessary chemicals consumes 2.4 x 10^6 Btu(t) plus 7.6 kWh(e) per metric ton of uranium processed (MTU) (see Appendices 8.10 and 8.14). The fuel requirements for this conversion process are 67 x 10^6 Btu(t) plus 1852 kWh(e) per metric ton of uranium processed.

The UO_3 is initially hydrated and pelletized by casting and drying. The pellets pass through two electrically heated moving bed reactors. In the first bed the UO_3 pellets are reduced to UO_2 by a counter flow of hydrogen produced by cracking anhydrous ammonia. In the second reactor the UO_2 is converted to UF_4 in a countercurrent flow of anhydrous HF.

In a separate part of the process the excess HF is converted to hydrogen and fluorine by electrolysis. The hydrogen is a waste element, but in the future it may be used instead of dissociated ammonia. The fluorine is reacted with UF_4 to produce UF_6. Major auxiliary equipment includes refrigeration units for condensing UF_6, extensive wet scrubbers for various gaseous effluents, and a ventilation system.

The production of chemicals consumed in the conversion requires 9.2x10^6 Btu(t) and 526 MWh(e) per metric ton of uranium processed. An additional consumption of 45.7 x 10^6 Btu(t) and 8600 kWh(e) per ton of uranium are required to carry out the conversion process.

The total energy required to convert yellow cake to UF_6 is shown in Table 11. The estimates are based on 125 x 10^6 Btu(t) and approximately 11 MWh(e) per metric ton of uranium processed.

Table 11. Energy Consumption in Converting Yellow Cake to UF_6

	Kilograms Uranium Processed* per MW(e)-yr of Reactor Operation	Energy Consumed per MW(e) Btu(t) x 10^6	kWh(e)
PWR	167	21	1840
BWR	152	19	1670
HTGR	83	10	910
LMFBR	0	0	0

*97% recovery of uranium treated, milling through conversion to UF_6

4.4.4 Uranium Enrichment (1)

The purpose of the gaseous diffusion cascade is to increase the percent of fissionable ^{235}U in the uranium for power plants. To accomplish this, UF_6 gas is forced through a system of cells with porous barrier walls. Since

$^{235}UF_6$ is slightly lighter than $^{238}UF_6$, it diffuses through these walls faster and the gas passing the barriers is slightly enriched in ^{235}U.

To obtain enriched uranium for reactor fuel, three large plants have been constructed with thousands of diffusion cells in series. The plants work together and are treated as one unit for accounting purposes. The main energy consuming parts of these plants are the pumps used to compress the UF_6 gas at each cell. Hence the prime energy source is electricity,and it is the only energy consumption considered in this section.

The power consumption in this process is expressed in terms of "Separative Work Units" (SWU) for the various fuel cycles (1). The units used are dependent on the desired enrichment level and amount of uranium processed. The energy cost is approximately 9.5 kg SWU/MW(e)-day or 0.3958 kg SWU/MWh(e)(4). Based on 0.3958 kg SWU/MWh(e), the energy consumed in gaseous diffusion enrichment is given in Table 12.

Table 12. Energy Consumed in Gaseous Diffusion Enrichment

Type	Units of Separative Work Needed per MW(e)-yr of Reactor Operation (kg-SWU)	Energy Used by Cascade Plants [MWh(e)/MW(e)-yr]
PWR	164.9	417
BWR	138.6	350
HTGR	107.4	270
LMFBR	0	0

4.4.5 Reconversion and Fuel Preparation

Reconversion and fuel preparation is basically similar for the different nuclear reactor systems. The enriched material from the Atomic Energy Commission's separation facilities is returned as UF_6 which is vaporized and reacted with ammonia and water to produce an aqueous slurry of ammonium diurinate (ADU) (55). The ADU slurry then goes to centrifuges and filters for solids separation. The cake from the filters is fed to an electric furnace for conversion, first to U_3O_8 with the aid of steam and finally to UO_2 in an atmosphere of cracked ammonia.

The uranium dioxide residue is ground to micron size for pelletizing. The powder is mixed with a binder such as polyvinyl alcohol, agglomerated, and pressed into "green" pellets of appropriate sizes for the various reactor systems. The pellets are then fed on molybdenum trays through a sintering furnace with a hydrogen-atmosphere at 3000°F for 4-5 hr. Sintering shrinks

the pellets and gives them a slight hourglass shape. They are subsequently machined to a perfect cylinder and shipped to the fuel element fabrication plant to be inserted in cylindrical fuel tubes for the PWR and BWR. For the HTGR, the UO_2 is formed into microspheres, coated with pyrolytic carbon, and imbedded in a graphite-type matrix in a cylindrical form for fueling the reactor.

For the LMFBR system, the fertile fuel is to be reduced to micron-size UO_2 powder at the fuel preparation plant. These micron size elements will then be shipped to the blanket fuel preparation plant and core fuel preparation plants where different size pellets will be manufactured by pressing into green pellets, then sintered and ground. Eighty percent of the energy consumed in this process will be used by the two electric furnaces for conversion and sintering (39).

The energy requirements for the various systems are summarized below (39):

PWR and BWR

Conversion of UF_6 to UO_2 including powder preparation, pelletizing, sintering, etc.	50 kWh(e)/kg of uranium processed
Energy used to produce ammonia [20% excess stoichiometric ratio, 20×10^6 Btu(t)/ton NH_3]	3100 Btu(t)/kg of uranium processed
Powder preparation, pelletizing, sintering, grinding, etc.	50 kWh(e)/kg of uranium processed

HTGR

Conversion of UF_6 to UO_2 microspheres	200 kWh(e)/kg of uranium processed
Ammonium production	3100 Btu(t)/kg
Preparation of ThO_2 microspheres	40 kWh(e)/kg of thorium processed

LMFBR

Conversion of UF_6 to UO_2	50 kWh(e)/kg of uranium processed
Ammonia production	3100 Btu(t)/kg of uranium processed
UO_2 powder preparation, pelletizing, sintering, grinding, etc.	50 kWh(e)/kg of uranium processed
Core fuel preparation, pelletizing, sintering, grinding, etc.	200 kWh(e)/kg of uranium plus plutonium processed

The total energy requirements for the reactors are summarized in Table 13.

Table 13. Energy Requirements for Nuclear Fuel Fabrication

Reactor System	Total UO_2, ThO_2, and PuO_2* (metric tons/yr)	Energy Requirements per MW(e)-yr of Reactor Operation: Heat Energy [Btu(t) x 10^3]	Electrical Energy kWh(e)
PWR	31.61	106	3590
BWR	37.94	126	4460
HTGR	9.016	3	1130
LMFBR	23.21	80	4340

*Operating at 80% plant capacity except for HTGR which was 85%.

4.4.6 Fuel Element Fabrication

The UO_2 fuel is usually clad with stainless steel, zirconium alloys, or graphite to protect the fuel from attack by the coolant, to prevent the escape of radioactive fission products, and to provide geometric integrity. The PWR, BWR, and LMFBR fuel elements are made of zirconium and 304-stainless steel respectively. These metals are mined and refined by electrolytic methods. The fuel is placed in metallic rods and loaded into fuel elements which are composed of a large number of rods. The HTGR fuel element is made of graphite which is in the form of hexagonal blocks. Holes are drilled in the graphite block for the fuel pellets and gas coolant channels.

PWR and BWR. The fuel design specifications for the PWR and BWR reactor systems may be seen below (67):

	PWR	BWR
Rods per element	204	49
Elements per reactor	193	764
Uranium per element, kg	439	187
Zirconium per element, kg	110.5	94.3
Refueling interval, operating year	1	1
Refueling increments (fraction of total)	1/3	1/4

HTGR. The fuel specifications for a 1160 MW(e) HTGR are (51):

	HTGR
Graphite fuel blocks per reactor	7591
Graphite per block, kg	113.7
Uranium per block, kg	0.379
Thorium per block, kg	4.258
Refueling interval, operating year	1
Refueling increment (fraction of total)	1/4

LMFBR. The fuel element specifications for a 1000 MW(e) LMFBR are:

	Fast Region	Inner Radial Blanket	Outer Radial Blanket 1st	Outer Radial Blanket 2nd
Rods per element	217	169	169	91
Elements per reactor	252	108	39	87
Uranium and/or plutonium per element, kg	79	119.4	95.5	115.7
Stainless steel per element, kg	98.2	59.6	51.7	46.6
Refueling interval (operating year)	1/2	1/2	1/2	1/2
Refueling increment (fraction of total)	1/3	1/4	1/8	1/8

The energy requirements to prepare the respective fuels are summarized in Table 14.

Table 14. Energy Requirements for Fuel Preparation

Fuel Element	Energy Used [kWh(e)/lb]
Zirconium (electrolytically refined from sand) (87)	10
Production of fuel rods, support plates, channeling, etc. (87)	4
Graphite cylinder production including forming and drilling (17)	5
304 stainless steel production	7.27*

*kWh(t)/lb

The total energy consumed in the fabrication of the various elements is given in Table 15.

Table 15. Fabrication Energy Costs

Reactor System	Material Usage per MW(e)-yr	Energy Usage kWh(e)/MW(e)-yr
PWR	18 lb zirconium	250
BWR	47 lb zirconium	660
HTGR	508 lb graphite	2540
LMFBR	55 lb stainless steel	220 + 400 kWh(t)

4.4.7 Reprocessing and Waste Disposal (42)

The spent reactor fuel elements are initially dissolved in hot nitric acid. Chemical separations are then performed to isolate the $UO_2(NO_3)_2$ and $Pu(NO_3)_4$ for recycling. All waste products are currently stored in their liquid and gaseous forms, but in the future all radioactive wastes will be solidified before being containerized as an extra precautionary step.

The energy consumed in reprocessing and waste disposal per metric ton of fuel (uranium, thorium or plutonium) processed is:

Operation	10^6 Btu(t)/MTU	MWh(e)/MTU
Chemical reprocessing	1248.0	60
Waste solidification	124.8	48

The total energy required for reprocessing and waste disposal is shown in Table 16.

Table 16. Reprocessing and Waste Disposal Consumption of Energy

Reactor System	MTU/yr	Energy Used per MW(e)-yr: Heat Energy Btu(t) x 10^6	Energy Used per MW(e)-yr: Electrical Energy kWh(e)
PWR	28.123	66	3570
BWR	33.94	55	4300
HTGR	8.36	13	1060
LMFBR	23.29	38	2960

4.4.8 Credit for Stored Plutonium

As mentioned previously the Liquid Metal Fast Breeder Reactor produces more plutonium than it consumes. Although the plutonium can be used to start up additional LMFBRs, the energy associated with this plutonium is an accounting problem. One method is to calculate the total potential energy associated with the plutonium. The energy released per gram atom can be assumed to equal 5.3×10^6 kWh(t) (26). The weighted average of one gram atom of fissile plutonium (85% ^{239}Pu and 15% ^{241}Pu) is 239.3 gm. Hence the stored energy has an associated potential energy of 22,148 kWh(t)/gm fissile plutonium. For the calculations below, percent fissile plutonium was given for the LMFBR and calculated from the "57-26-12-5" isotope ratio for the BWR and PWR. In the HTGR cycle the ^{233}U produced is recycled so the energy credit for this material is explicitly included in the calculations.

The total potential energy credited to a reactor for stored plutonium is shown in Table 17. The bred plutonium produced during reactor operations could be recycled to light water reactors, thereby reducing the enriched uranium requirements. This would in turn reduce the energy required in mining, milling, conversion, and enrichment.

Table 17. Total Potential Energy of Plutonium Produced by Nuclear Fuel Cycles

	Metric Tons of Pu/yr	% Fissile	Potential Energy MWh/yr	Potential Energy 10^9 Btu/yr
PWR	0.260	69.0	3,967,340	13,558
BWR	0.269	69.0	4,110,880	14,026
LMFBR	0.200	72.7	3,218,540	10,982

If the fissile plutonium is credited as an equivalent amount of enriched uranium, the energy consumption for mining and enrichment operations will be reduced. The resulting energy credits assigned to the light water reactors would be:

	Thermal Energy Btu x 10^6/MW(e)-yr	Electrical Energy MWh(e)/MW(e)-yr
PWR	20	80
BWR	21	76

4.4.9 Conversion of Recovered Uranium to UF_6

The concentrated uranyl nitrate produced in the reprocessing plants must be converted to UF_6 before it can be enriched in the gaseous diffusion cascade. The energy consumed by this conversion has been assumed to be equal to the energy consumed in converting UO_3 to UF_6. Therefore the energy required for reconversion is 54.927 x 10^6 Btu(t) and 9.126 MWh(e) per metric ton of uranium. Only the BWR and PWR recycle uranium through the gaseous diffusion cascade. The total energy required for reconversion is shown in Table 18.

Table 18. Total Energy Consumed in Reconversion

	Metric Tons* of Uranium	Energy Required per MW(e)-yr: Heat Energy x 10^6 Btu(t)	Energy Required per MW(e)-yr: Electrical Energy kWh(e)
BWR	32.22	2.1	347
PWR	27.50	1.8	295

*Operating at 85% of plant capacity.

4.4.10 Transportation

The major portions of energy expended in the transportation of the various nuclear fuel materials and wastes are due to the massive protective shielding required. The total energy consumed by the transportation sector for the nuclear reactors is shown in Table 19. All shipments are by truck unless specified otherwise. The energy propulsion efficiencies are assumed to be 50 cargo ton miles per gallon by truck and 250 cargo ton miles/gal by rail. The energy content of transportation fuel is assumed to be 136,000 Btu/gal (64) (see Appendix 8.13 for greater details).

5. OTHER ENERGY CONSUMPTION

5.1 Power Plant Waste Heat

Due to low thermal efficiencies a large amount of waste heat is generated by both fossil and nuclear fueled power plants. Energy losses incurred when switching from run-of-river cooling to mechanical draft cooling towers are due to: (1) energy consumed in pumping water to the top of the tower (50-60 ft), (2) energy consumed in inducing air flow, and (3) decreased turbine efficiency. The decrease in turbine efficiency is caused by an increase in back pressure.

Table 19. Annual Energy Consumption in Transportation of Fuels for 1000 MW(e) PWR, BWR, LMFBR, and HTGR [1160 MW(e) at 80% capacity] Operating at 85% Capacity

	Btu(t) x 10^6			
	PWR	BWR	HTGR	LMFBR
1. Mill to Conversion Plant	426	389	247	-
2. Conversion Plant to Gaseous Diffusion Plant	584	532	317	-
3. Gaseous Diffusion Plant to Fuel Preparation Plant	363	436	3	110
4. Fuel Preparation Plant to Fuel Element Fabrication Plant	222	266	261	150
5. Fuel Fabrication Plant to Scrap Recycle	19	22	11	10
6. Fuel Fabrication Plant to Reactor	212	296	775	546
7. Reactor to Chemical Reprocessing Plant	1991	3094	5958	3817
8. Waste Shipment	662	748	182	491
9. Chemical Reprocessing Plant to Fuel Preparation Plant	136	158	4	762
Total	4615	5941	7758	5885
Energy used - Btu(t) x 10^6 per MW(e)-yr	5.4	7.0	8.4	6.9

The total penalty incurred when using a mechanical draft cooling tower is 2-3% (16) of the plants generating capacity. Although the waste heat per MWh produced is higher for nuclear fueled plants than for fossil fueled plants, a penalty of 3% will be assumed for both. The higher heat rate of the nuclear plant requires higher water and air flow rates; however, the energy consumed by the pumps and fans accounts for only 10% of the total penalty (see Appendix 8.12).

5.2 Transmission Losses

Energy losses are incurred in the transmission of electrical energy due to resistance in the power lines and transformer losses. For the year 1968 an average loss of 8.8% of generating capacity was calculated. The number represents a weighted average of public and privately owned generating plants (73, 74).

6. RESULTS AND CONCLUSIONS

A compilation of the energy consumption of the various power plants is presented in Table 20. It can be seen that the light water reactors represent the least efficient overall energy usage. However, with the present mix of fossil and nuclear fueled plants, the overall efficiency would be higher for a mixed source of electrical energy used in the diffusion process.

Table 20. Overall Thermal Efficiencies of Power Plant Fuel Cycles

Plant Type	Central Plant Efficiency (%)	Overall Cycle Efficiency (%) With Once-Thru Cooling	Overall Cycle Efficiency (%) With Cooling Towers
Fossil Fuel			
Coal	35.26	30.01[a] 30.08[b]	29.11[a] 29.17[b]
Oil	35.26	29.78	28.89
Gas	35.26	31.01	30.08
Coal	40.0	34.04[a] 34.12[b]	33.02[a] 32.17[b]
Oil	40.0	33.78	32.77
Gas	40.0	35.19	34.13
Nuclear			
BWR	32.5	28.25	27.40
PWR	32.5	28.0	27.16
HTGR	38.7	34.05	33.03
LMFBR	40.0	36.43	35.34

[a]Underground mining

[b]Surface mining

The HTGR compared favorably with modern supercritical fossil fueled plants. The LMFBR represents the most efficient system.

The greatest energy sinks are: (1) turbine operations and the thermodynamic temperatures of operation, (2) electric transmission, (3) uranium enrichment by gaseous diffusion, and (4) cooling towers. Even though the loss due to gaseous diffusion enrichment is eliminated upon the introduction of fast breeder reactors, even more significant gains can be achieved by improvements in the central plant conversion efficiency and in methods of electrical transmission. Introduction of topping cycles for higher temperature operations and cryogenic electric transmission would improve overall efficiencies significantly.

All other energy consuming steps in the production of electricity are trivial in comparison to the above listed processes.

7. ACKNOWLEDGEMENTS

We wish to thank our consultant, L.L. Bennett, for his continuous assistance in this project. We also wish to acknowledge the help of A.L. Lotts and J.D. Sease of ORNL, E.D. North of Nuclear Fuel Services, Inc., W.J. Stinson of Eldorado Nuclear, Ltd., as well as all the personnel of ORNL who aided us in so many facets of this report.

8. APPENDIX

8.1 Heat and Fuel Requirements for Fossil Fueled Plants (1000 MWe)

The fuel requirements for a 35.26% and a 40% efficient plant are shown below.

Case I (35.26% Efficiency)

$$\left(\frac{3413}{0.3526}\ \text{Btu/kWh} \times 10^3\ \text{kWh/MWh}\right)\left[(10^3\ \text{MWh})(80\%\ \text{capacity}) \times (365.25\ \text{days/yr})(24\ \text{hr/day})\right] = 6.788 \times 10^{13}\ \text{Btu/yr}$$

Case II (40% Efficiency)

$$(8532.5\ \text{Btu/kWh} \times 10^3\ \text{kWh/MWh})(7.0128 \times 10^6\ \text{MWh/yr}) = 5.984 \times 10^{13}\ \text{Btu/yr}$$

Fuel Energy Contents (18):

Bituminous coal	26.2×10^6 Btu/ton
Natural gas (dry)	1.035×10^6 Btu/mscf
Residual Fuel Oil	6.29×10^6 Btu/bbl

Fuel Requirements:

	Case I 35.26% Efficiency	Case II 40% Efficiency
Coal	2.591×10^6 ton/yr	2.284×10^6 ton/yr
Natural Gas	6.559×10^{10} scf/yr	5.7816×10^{10} scf/yr
Residual Fuel Oil	1.079×10^7 bbl/yr	9.514×10^6 bbl/yr

8.2 Control of Particulate Matter at Fossil Fueled Plants (84)

The energy consumed in particulate control is included in the category "auxiliary" power or central plant efficiency. However, its magnitude can be approximated based on the Bull Run Steam Plant (TVA) which has an output power capacity of 900 MW(e). The power consumed by precipitators is 0.77 MW(e) and the power consumed by the blowers to force flue gases across the

precipitators varies between 0.42 to 0.84 MW(e). Therefore the total energy consumed is 1.19 to 1.61 MW(e) or 0.00132 to 0.00178 MW(e)/MW(e) generated.

8.3 Coal Handling Costs (24)

The magnitude of coal handling costs can be estimated although they are included in the "auxiliary" power term. The Bull Run Steam Plant (TVA) with a 900 MW(e) power generating capacity has a coal usage of 320 ton/hr (6).

Conveyor capacities:

1.	from coal pile to breaker	1200 ton/hr
2.	from breaker to transfer station A	2400 ton/hr
3.	from transfer station to dead storage	2000 ton/hr
4.	from dead storage to transfer station B	2000 ton/hr
5.	from transfer station B to powerhouse	2000 ton/hr (7)

Under the most conservative conditions all conveyors operate at 1200 ton/hr; the conveyors are run 0.27 hr/hr production (320 ton/hr/1200 ton/hr). The total power requirements for coal handling equipment is for the conveyors (5218 hp) and vibrators (1000 W) yielding 3892 kWh/hr of operation.

$$(3892\ \text{kWh/hr})(0.266\ \text{hr/hr production}) = 1035\ \text{kWh/hr production}$$

$$\frac{1035\ \text{kWh/hr production}}{900\ \text{MWh/hr production}} = \frac{0.00115\ \text{MWh consumed}}{\text{MWh generated}}$$

$$(0.00115\ \text{MWh/MWh generated})(7.0128 \times 10^{6}\ \text{MWh/yr}) = 8065\ \text{MWh(e)/yr}$$

Similarly the energy consumed in pulverizing can be obtained from the size of the equipment.

$$(17\ \text{hp}/1000\ \text{kW})(0.7457\ \text{kW/hp}) = 0.0127\ \text{MW/MW produced}$$

$$= 88{,}800\ \text{MWh(e)/yr}$$

8.4 Coal Mining (61)

For 1963 the total energy produced by coal was $12{,}447.5 \times 10^{12}$ Btu. Based on historical data one can extrapolate that 31% of the coal mined in 1963 was strip mined (78).

$$\text{strip mining} = 0.31(12{,}447.5 \times 10^{12}) = 3860 \times 10^{12} \text{ Btu}$$

$$\text{underground mining} = 8590 \times 10^{12} \text{ Btu}$$

The coal mining industry consumed 115.5×10^{12} Btu in the year 1963; however, 15.7×10^{12} Btu was electrical energy. Thus the total thermal input was 99.8×10^{12} Btu. The electrical input can be converted using the factor of approximately 9000 Btu/kWh(e).

$$15.7 \times 10^{12} \text{ Btu}\left(\frac{1 \text{ kWh(e)}}{9 \times 10^3 \text{ Btu}}\right)\left(\frac{1 \text{ MWh(e)}}{10^3 \text{ kWh(e)}}\right) = 1.74 \times 10^6 \text{ MWh(e)}$$

Power consumption costs were obtained from Reference (78):

strip mining = 18.6¢/ton

underground = 26¢/ton

To separate the power consumed by strip mining from that consumed by underground mining, the following calculations were made:

X_s = Btu produced by strip mining = 3860×10^{12} Btu

X_u = Btu produced by underground mining = 8590×10^{12} Btu

Y_s = Btu(t) consumed by strip mining

Y_u = Btu(t) consumed by underground mining

It is assumed that the cost of the mining is directly proportional to the energy consumed per unit of energy mined.

$$\frac{Y_s/3860}{Y_u/8590} = \frac{18.6}{25} = 0.74$$

Since the total thermal energy consumed was 99.8×10^{12} Btu(t),

$$Y_u = 99.8 - Y_s$$

and

$$\frac{Y_s}{3860} = \frac{0.74}{8590} (99.8 - Y_s)$$

Therefore,

$$Y_s = 25 \times 10^{12} \text{ Btu/yr}$$

and

$$Y_u = 75 \times 10^{12} \text{ Btu/yr}$$

Similarly the electrical energy usage per unit of energy mined is assumed proportional to the costs.

W_s = Btu(e) consumed by strip mining

W_u = Btu(e) consumed by underground mining

$$\frac{W_s/3860}{W_u/8690} = 0.744$$

Since the total electrical energy consumed was 15.7×10^{12} Btu(e),

$$W_u = 15.7 - W_s$$

and

$$\frac{W_s}{3860} = \frac{0.74(15.7 - W_s)}{8590}$$

Therefore,

$$W_s = 3.9 \times 10^{12} \text{ Btu}[1 \text{ MWh(e)}/9 \times 10^6 \text{ Btu}] = 4.4 \times 10^5 \text{ MWh(e)}$$

$$W_u = 11.8 \times 10^{12} \text{ Btu}[1 \text{ MWh(e)}/9 \times 10^6 \text{ Btu}] = 1.3 \times 10^6 \text{ MWh(e)}$$

Thus the thermal energy consumed by strip mining is

$$\frac{25}{3860} = 0.0065 \text{ Btu/Btu produced}$$

and the electrical energy is

$$\frac{4.4 \times 10^5 \text{ MWh(e)}}{3860 \times 10^{12} \text{ Btu}} = 1.1 \times 10^{-10} \text{ MWh(e)/Btu produced}$$

The thermal energy consumed by underground mining is:

$$\frac{75}{8590} = 0.0087 \text{ Btu/Btu produced}$$

with the electrical energy consumption being

$$\frac{1.3 \times 10^{6} \text{ MWh}}{8590 \times 10^{12} \text{ Btu}} = 1.5 \times 10^{-10} \text{ MWh(e)/Btu produced}$$

8.5 Crude Oil and Natural Gas Produced

Generally both natural gas and crude oil are extracted simultaneously from an oil well; therefore, it is assumed that the energy requirement to extract a Btu of gas equals that required to extract a Btu of crude oil (60, 62). The total petroleum and natural gas energy consumption is 208.4×10^{12} Btu(t) and 21.5×10^{12} Btu(e). If we assume the power needed to produce electricity is 9000 Btu/kWh(e), then the above electrical term becomes 2.4×10^{6} MWh(e).

natural gas produced	$16{,}271.3 \times 10^{12}$ Btu
crude oil produced	$18{,}444.2 \times 10^{12}$ Btu
total produced	$34{,}715.5 \times 10^{12}$ Btu

The total thermal electrical power consumptions for crude oil and natural gas are:

thermal:

$$\frac{208 \times 10^{12} \text{ Btu}}{347 \times 10^{14} \text{ Btu}} = 0.006 \text{ Btu consumed/Btu produced}$$

electric

$$\frac{2.4 \times 10^{6} \text{ MWh(e)}}{3.47 \times 10^{16} \text{ Btu}} = 6.9 \times 10^{-11} \text{ MWh(e) consumed/Btu produced}$$

8.6 Sulfur Dioxide Controls for Coal Fired Plants

The desulfurization of flue gases from a high sulfur coal (∿3% sulfur) in an alkali scrubber assumes the following energy requirements:

1. 35 hp/MW(e) for limestone preparation, high energy scrubbing, and fan power to overcome the pressure drop across the SO_2 scrubber.

2. 3.07×10^{5} Btu/MWh(e) are required for regeneration of limestone solution in a 40% efficient plant.

$$[35\ hp/MW(e)][7.457 \times 10^{-4}\ MW(e)/hp] = 0.026\ MW(e)/MW(e)\ produced$$

$$[0.026\ MW(e)/MW(e)\ prod][7.0128 \times 10^{6}\ MWh(e)\ prod/yr] = 1.83 \times 10^{5}\ MWh(e)/yr$$

$$[heat\ 3.07 \times 10^{5}\ Btu/MWh(e)][7.0128 \times 10^{6}\ MWh(e)/yr] = 21.5 \times 10^{11}\ Btu/hr\ (57)$$

If it is assumed that the energy consumptions quoted are for a 40% plant and are directly related to the amount of coal burned, the energy consumed by a 35.26% plant can be calculated.

$$\frac{2.591 \times 10^{6}\ ton/yr\ for\ 35.26\%\ plant}{2.284 \times 10^{6}\ ton/yr\ for\ 40\%\ plant}(1.83 \times 10^{5}\ MWh(e)/yr) = 2.08 \times 10^{5}\ MWh(e)/yr$$

$$\frac{2.591 \times 10^{6}\ ton/yr\ for\ 35.26\%\ plant}{2.284 \times 10^{6}\ ton/yr\ for\ 40\%\ plant}(21.5 \times 10^{11}\ Btu/hr) = 24.4 \times 10^{11}\ Btu/yr$$

8.7 Desulfurization of Natural Gas (58)

The natural gas to be treated in an amine scrubber is assumed to contain 0.5 vol % H_2S at the well head. Therefore, before treatment a total of 1.005 ft^3 gas/ft^3 fuel gas must be treated or 5.025 ft^3 H_2S/1000 scf of natural gas. The energy consumptions for treating the gas are:

1. 0.5 kWh(e)/scf H_2S to drive pumps and instruments, or 2.5 kWh(e)/1000 scf of natural gas

2. 90 Btu/scf H_2S for amine regeneration, or 450 Btu(t)/1000 scf of natural gas

8.8 Desulfurization of Residual Oil (57)

Refinery fuel oil is assumed to contain 2.0 vol % sulfides and is desulfurized by hydrogeneration. To obtain one barrel of fuel oil for combustion, 1.0204 barrel must be extracted.

$$liquid\ H_2S/bbl = (0.02)(1.0204\ bbl)(42\ gal/bbl) \times (7.328\ lb/gal) = 6.28\ lb$$

for

API (fuel oil) = 30 (44) [at STP, an API of 30 = 7.328 lb/gal (52)]

Energy of consumption for hydrorefining process:

1. 5.0 kWh(e)/bbl

2. 16,150 Btu/bbl

(5.0 kWh(e)/bbl)(1.0204 bbl extracted/bbl combusted)

= 5.102 kWh(e)/bbl combusted

(16,150 Btu)(1.0204 bbl extracted/bbl combusted)

= 16,479.9 Btu/bbl combusted

3. Heavy fuel oil consumes 830 scf of hydrogen per barrel for hydrodesulfurization or:

(830 scf H_2/bbl)(1.0204 bbl extracted/bbl combusted)

= 846.9 scf/bbl combusted

4. To produce 1000 scf of hydrogen, 422 scf of natural gas needs to be reformed consuming 1.045 kWh.

(849.9 scf H_2/bbl)(0.422 scf nat gas/scf H_2) = 358.7 scf nat gas/bbl

(849.9 scf H_2/bbl)(1.045 kWh(e)/1000 scf H_2) = 0.888 kWh/bbl

5. All the hydrogen sulfide from hydrorefining is assumed to be scrubbed in an amine unit. At STP,

$$\rho_{H_2S_{(g)}} = 0.0961 \text{ lb/ft}^3 \text{ (52)}$$

and

$$H_2S_{(g)} \text{ scrubbed} = (6.28 \text{ lb})\left(\frac{\text{ft}^3}{0.0961 \text{ lb}}\right) = 65.36 \text{ ft}^3$$

65.36 scf H_2S/bbl(0.5 kWh/scf H_2S) = 32.7 kWh/bbl

65.36 scf H_2S/bbl(90 Btu/scf H_2S) = 5882.4 Btu/bbl

6. Energy consumed in the extraction of the necessary natural gas is:

(357.4 scf nat gas/bbl)(1035 Btu/scf nat gas)(0.006 Btu consumed/ Btu produced) = 2219.5 Btu(t)/bbl

(357.4 scf nat gas/bbl)(1035 Btu/scf nat gas)(6.8813×10^{-11} MWh consumed/Btu produced) = 2.545×10^{-5} MWh/bbl

Total energy consumption is:

24,581.8 Btu(t)/bbl fuel oil

38.7 kWh(e)/bbl fuel oil

8.9 Uranium Mining

As stated previously the extraction of uranium ore requires approximately 20 kWh and 2.8 lb dynamite/ton crude ore. The energy consumed in producing one pound of dynamite is 0.01 kWh (9). The total energy consumed in extracting a ton of crude ore is 0.2003 MWh(e).

	metric tons U/yr	short tons ore/yr	MWh(e)/yr
PWR	142.17	5.60×10^4	1122.71
BWR	129.38	5.10×10^4	1021.57
HTGR	77.204	3.043×10^4	609.50

8.10 Uranium Milling

The Anaconda Company Bluewater Plant was used as a basis for uranium milling energy requirements. The plant has a capacity of 3000-3300 tons crude ore/day, and the recovery of U_3O_8 is 97% for a crude ore content of U_3O_8 at 0.34%. The energy requirement to produce a pound of the chemical solvents used in the process is:

	Per ton Ore (lb)	Energy to Produce
H_2SO_4	84	0.016 kWh(e)/lb (19)
MnO_2	10	-
NaCl	28	2.6615×10^3 Btu(t)/lb (21)
Lime	2.3	2.125×10^3 Btu(t)/lb (70)
MgO	1.5	-

The utilities used in milling are 35 kWh(e)/ton of ore and 1.12×10^6 Btu(t)/ton ore.

The total energy consumed per ton of crude ore processed is 0.036 MWh(e) and 1.2×10^6 Btu(t). The amount of crude ore required to be processed to obtain a ton of U_3O_8 is:

$$\frac{1 \text{ ton ore}}{0.34\% \ U_3O_8 \ (97\% \text{ recovery})} = 303 \text{ tons ore/ton } U_3O_8$$

The U_3O_8 contains 84.8 wt % of uranium. To obtain a metric ton uranium ore, one must process

$$\left[\frac{303 \text{ tons ore}}{(\text{ton } U_3O_8)(84.80\% \ U)}\right]\left[\frac{1.1025 \text{ tons}}{\text{metric ton}}\right] = 394 \text{ tons ore/metric ton U}$$

The energy required in milling to produce a metric ton of uranium is 11 MWh(e) and 125×10^6 Btu(t).

8.11 Alternate Methods to Evaluate Plutonium Credit

Another way to assign a value to the plutonium which is produced by PWR and BWR fuel cycles is to assume that it is recycled to the same reactor. If the fissile and fertile plutonium isotopes are considered the equivalents of ^{235}U and ^{238}U, the amount of uranium used and the separative work required in the gaseous diffusion cascade can be reduced (1). New values were then calculated for separative work and MTU feed.

	Old Feed (MTU)	New Feed (MTU)	Old Work (kg SWU)	New Work (kg SWU)
BWR	128.73	88.700	117,800	71,697
PWR	141.46	101.877	140,200	95,180

As a result of these changes in separative work and uranium feed, energy changes were calculated for mining, milling, conversion to UF_6, and gaseous diffusion. The resulting changes are shown in Table 21.

Table 21. Effect of Recycling Plutonium on a Yearly Basis

	BWR		PWR	
	Thermal Energy (10^6 kWh)	Electrical Energy (10^6 kWh)	Thermal Energy (10^6 kWh)	Electrical Energy (10^6 kWh)
Mining to UF_6 (old)	22.6	4.29	24.9	4.71
(new)	15.6	2.95	17.9	3.39
Gaseous Diffusion (old)		297.6		354.2
(new)		181.1		240.5

8.12 Power Losses

An industry quoted figure for the penalty incurred when switching from surface water cooling to mechanical draft cooling towers is 2-3% of generating capacity (16). When the Hanford No. 2 nuclear power plant changed to mechanical draft cooling towers, its generating capacity was reduced from 1,130,000 to 1,100,000 kW.

$$\frac{1,130,000 - 1,100,000}{1,130,000} = 2.65\% \text{ decrease}$$

The towers were equipped with twelve 200-hp fans for air circulation. This represented (12)(200 hp)(0.7457 kW/hp) = 1790 kW or 0.16% decrease in capacity and 5.9% of the penalty. Although pump and fan costs vary with different conditions, data collected covering 52 mechanical draft cooling towers (36) indicate that pump and fan costs are approximately equal. Thus the total pump and fan costs account for approximately 12% of the total penalty incurred.

Most plants have both a high pressure and low pressure turbine. At the TVA Bull Run Steam Plant, Tennessee, approximately 50% of the total power generated is produced by each generator (84). During typical summer operations with once-through river cooling water, the low pressure turbine exhaust pressure is 1.5 to 2.25 in Hg. Wet cooling tower systems will yield exhaust pressure of 2.5 to 4.5 in Hg. This increase in back pressure on the low pressure turbine will reduce turbine performance from 1,255,000 to 1,205,000 kW or

$$\frac{1{,}255{,}000 - 1{,}205{,}000}{1{,}255{,}000} = 3.98\% \text{ decrease}$$

Since low pressure turbines generally produce only 50% of the total power, the penalty incurred is (0.5)(3.90) or 1.99% (28). Thus, the loss due to the decrease in turbine efficiency (1.99%) is much larger than that caused by pumping and fan costs (0.16%).

Although nuclear plants discharge more waste heat per MW generated than fossil fueled plants, the effect is minimal on total penalty incurred and a 3% penalty will be applied to both plants.

8.13 Transportation

In this section the shipments of various fuel materials and wastes are presented. The assumed reference designs for each type of shipping system will be presented. All shipments are made by truck unless otherwise specified. All factors described below involving cargo weight and distances are taken from Ref. (46).

1. Thermal Reactors, PWR, BWR, and HTGR

   a) Mill to Conversion Plant

shipping container	55-gal drum
tare weight, lb	55
typical truck shipment	2.8 total lb shipped/kg U
distance, miles	780

These containers are returned to U_3O_8 Mill.

   b) Conversion Plant to Gaseous Diffusion Plant

UF_6 enrichment	<1.2%
shipping container	Model 46F (AEC UF_6 container)
tare weight, lb	5200
typical truck shipment	3.9 total lb shipped/kg U
distance, miles	780

These containers are returned to Conversion Plant.

c) Gaseous Diffusion Plant to Reconversion and Fuel Preparation Plant

1) For PWR and BWR (UF_6 enrichment <5%)

shipping container	Model 30A (AEC container)
tare weight, lb	3350
typical truck shipment	5.6 total lb shipped/kg U
distance, miles	810

These containers are returned.

2) For HTGR (UF_6 enrichment is 93%.)

shipping container	5A (AEC UF_6 container)
tare weight, lb	55
typical truck shipment	3.31 total lb shipped/kg U
distance, miles	810

These containers are returned.

d) Fuel Preparation Plant to Fuel Element Fabrication

1) For PWR and BWR (3.3% enriched UO_2)

shipping container	fiber inner container with double 55-gal-outer drum
tare weight, lb	550
typical truck shipment	4.9 total lb shipped/kg U
distance, miles	540

These containers are returned.

2) For HTGR (93% enriched UO_2)

shipping container	inner steel container with double 55-gal-outer drum
tare weight, lb	1030
typical truck shipment	19.6 total lb shipped/kg U
distance, miles	540

These containers are returned.

e) Fuel Element Fabrication to Reactor

1) PWR

shipping container	steel box
tare weight, lb	4200
elements per container	2
typical truck shipment	6.9 total lb shipped/kg U
distance, miles	430

These containers are returned with recycle.

2) BWR

shipping containers	steel box
tare weight, lb	4200
elements per container	2
typical truck shipment	14 total lb shipped/kg U
distance, miles	430

These containers are returned with recycle.

3) HTGR

shipping container	steel box
tare weight, lb	4200
elements per container	18
typical truck shipment	600.2 total lb shipped/kg U, Th
distance, miles	430

These containers are returned.

f) HTGR Fuel Element Fabrication Recycle to Reprocessing Plant

shipping containers	steel drum
tare weight, lb	1030
typical truck shipment	19.6 total lb shipped/kg U-Th
distance, miles	500

These containers are returned.

g) PWR, BWR Fuel Element Fabrication Recycle to Reconversion and Fuel Preparation Plant

shipping container	steel can
tare weight, lb	1030
typical truck shipment	19.6 total lb shipped/kg U
distance, miles	540

These containers returned are the ones received from Reconversion and Fuel Preparation.

h) Reactor to Chemical Reprocessing Plant

1) BWR

i) 60% of the shipments are made by truck

shipping containers	shielded cask
tare weight, lb	50,000
elements per container	1
typical truck shipment	117 total lb shipped/kg U
distance, miles	280

These containers are returned.

ii) 40% of the shipments are made by rail

shipping containers	shielded cask
elements per container	7
typical rail shipment	142 total lb shipped/kg U
distance, miles	1120

These containers are returned.

2) PWR

i) 60% of the shipments are made by truck

shipping container	shielded cask
tare weight	50,000
elements per container	1
typical truck shipment	117 total lb shipped/kg U
distance, miles	280

These containers are returned.

ii) 40% of the shipments are made by rail

shipping containers	shielded cask
elements per container	7
typical rail shipment	59.9 total lb shipped/kg U
distance, miles	1120

These containers are returned.

3) HTGR

i) 60% of the shipments are made by truck

shipping container	shielded cask
elements per container	9
tare weight, lb	50,000
typical truck shipment	1236 total lb shipment/kg U-Th
distance, miles	280

ii) 40% of the shipments are made by rail

shipping container	shielded cask
tare weight, lb	180,000
elements per container	72
typical rail shipment	552 total lb shipped/kg U-Th
distance, miles	1100

i) Reprocessing Waste to Storage Site

shipping container	shielded cask
tare weight, lb	260,000
contents:	for 17.5 metric ton of fuel processed, 15,000 lb of material is put in this container
rail distance, miles	1000

These containers are not returned; they are buried.

2. LMFBR

a) Depleted UF_6 from Gaseous Diffusion Plant to Fuel Preparation Plant

UF_6 enrichment	0.3%
shipping container	48F (AEC container)
tare weight, lb	5200
typical truck shipment	3.9 total lb shipped/kg U
distance, miles	850

These containers are returned.

b) Blanket Fuel Preparation Material to Blanket Fabrication Plant

shipping container	inner fiber drum container with double 55-gal outer drum
tare weight, lb	550
typical truck shipment	7.1 total lb shipped/kg U
distance, miles	150

These containers are returned.

c) Core Fuel Preparation Material to Core Fabrication Plant

shipping container	inner steel can with double 55-gal-outer drum
tare weight, lb	1030
typical truck shipment	3 total lb shipped/kg U-Pu
distance, miles	150

These containers are returned.

d) Core Assemblies to Reactor

1) Fast Region Elements

shipping container	steel box
tare weight, lb	5500
elements per container	6
typical truck shipment	17 total lb shipped/kg U-Pu
distance, miles	690

2) Inner Radial Blanket Element

shipping container	steel box
tare weight	5500 lb
elements per container	6
typical truck shipment	11.3 total lb shipped/kg U
distance, miles	690

3) First Outer Radial Blanket Element Transportation

shipping container	steel box
tare weight	5500 lb
elements per container	6
typical truck shipment	13.3 total lb shipped/kg U
distance, miles	690

4) Second Outer Radial Blanket Element Transporation

shipping container	steel box
tare weight	5500 lb
elements per container	6
typical truck shipment	11.3 total lb shipped/kg U
distance, miles	690

These containers are returned.

e) Reactor to Chemical Reprocessing Plant

1) 60% of the fuel elements are transported by truck

shipping container	shielded cask
tare weight, lb	54,500
elements per container	3
typical shipment	372 lb/kg of fuel
distance, miles	300

These shipping containers are returned.

2) 40% of the fuel elements are transported by rail

shipping container	shielded cask
tare weight	186,000 lb
elements per container	18
typical shipment	146 lb/kg of fuel
distance, miles	1310

These shipping containers are returned.

f) Chemical Reprocessing Plant to Core Fuel Preparation Plant

shipping container	inner polyethylene bottle with a double 55-gal outer drum
tare weight, lb	510
typical truck shipment	216 total lb shipped/kg Pu
distance, miles	570

g) Chemical Reprocessing Wastes to Storage Site

shipping container	shielded cask
tare weight, lb	260,000
contents	for every 17.5 metric tons of fuel processed, 15,000 lb of materials are put in this container
rail distance, miles	1000

These containers are not returned; they are buried.

The energy consumption for transportation calculated using the data of Figs. 2, 3, 4, and 5, and using the estimates stated in Sect. 4.4.10 are shown on Table 22.

8.14 Energy Consumption in Chemical Production

For certain parts of the fuel cycles described in this report, large amounts of chemicals are used. For most of these, consumption for manufacture was taken from Ref. (9). However, for NH_3, HNO_3, and HF, detailed analyses have been performed to determine heat and electrical energies needed for production.

Ammonia Production (70)

Utilities based on one ton NH_3:

19,200 scf natural gas
60 kWh electricity

At 1035 Btu/scf, this is 19.4×10^6 Btu/ton NH_3.

Nitric Acid Production (70)

Basis of one ton 100% HNO_3

ammonia	574 lb [17.2 kWh and 5.7×10^6 Btu(t)]
electricity	9 kWh
steam (200 psia, 500°F)	1750 lb
efficiency	95%

Table 22. Annual Energy Consumption in Transporting Fuels for PWR, BWR, LMFBR, and HTGR Operating at 85% of Capacity*

	Uranium Metric Tons	Uranium Short Tons	Ton-Mile	Energy Consumed Btu(t.) x10^6
1. Mill to Conversion Plant				
PWR	146.2	201	157,000	426
BWR	133.45	184	143,000	389
HTGR	84.8	117	90,900	247
LMFBR	0	0	0	0
2. Conversion Plant to Gaseous Diffusion Plant				
PWR	142.0	274	215,000	584
BWR	129.2	250	195,000	532
HTGR	77.0	149	117,000	317
LMFBR	0	0	0	0
3. Gaseous Diffusion Plant to Fuel Preparation Plant				
PWR	58.9	164	134,000	363
BWR	70.7	197	160,000	436
HTGR	0.846	1.4	1,140	3
LMFBR	44.2	50	40,000	110
4. Fuel Preparation Plant to Fuel Element Fabrication Plant				
PWR	61.6	150	82,000	222
BWR	74	180	98,000	266
HTGR	18	176	96,000	261
LMFBR				
Core	18	276	41,000	112
Blanket	32	94	14,000	39
5. Fuel Fabrication Plant to Scrap Recycle				
PWR	4.4	13	7,000	19
BWR	5.2	15	8,000	22
HTGR	0.88	8	4,000	11
LMFBR				
Core	1.2	18	2,800	8
Blanket	2.2	6	900	2
6. Fuel Fabrication Plant to Reactor				
PWR	58.2	183	78,000	212
BWR	70.0	256	109,000	296
HTGR	17.0	672	287,000	775
LMFBR				
Core	26.8	190	134,000	364
Blanket	20	96	67,000	182
7. Reactor to Chemical Reprocessing Plant				
PWR				
Truck	34.9	2042	576,000	1567
Rail	23.3	698	779,000	424
BWR				
Truck	42	2457	693,000	1884
Rail	28	1991	2,224,000	1210
HTGR				
Truck	10.2	6304	1,778,000	4835
Rail	6.8	1877	2,064,000	1123
LMFBR				
Truck	21	3910	1,173,000	3190
Rail	14	1020	1,336,000	727
8. Chemical Reprocessing Plant to Work Storage				
PWR		228	228,000	622
BWR		275	275,000	748
HTGR		67	67,000	182
LMFBR		181	181,000	491
9. Chemical Reprocessing Plant to Fuel Preparation Plant				
PWR	55	62	50,000	136
BWR	64.6	73	58,000	158
HTGR	0.68	2	1,600	4
LMFBR	4.6	485	280,000	762

*Capacity of all plants is 1000 MW(e) except HTGR which is 1160 MW(e).

Steam (200 psia, 500°F):

enthalpy = 1269 Btu/lb (35)

If steam generation is 85% efficient, then

heat = 1269(1750)/(0.85) = 2.6×10^6 Btu

The total energy required for HNO_3 production including the 95% efficiency factor is:

heat = 8.7×10^6 Btu/ton HNO_3

electricity = 27.6 kWh/ton HNO_3

Hydrofluoric Acid Production (21)

Basis: one ton anhydrous hydrofluoric acid

700 kWh electricity

7.0×10^6 Btu natural gas

6400 lb of H_2SO_4

The H_2SO_4 requires 0.016 kWh(e)/lb of production (70). For 6400 lb H_2SO_4, 102 kWh(e) are necessary; therefore the total electrical input for one ton of HF is 802 kWh(e).

8.15 Summary of Energy Consumption

8.15.1 Energy Consumption in Coal-Fired Fuel Cycle (40% Central Plant Efficiency) with Surface Water Cooling

	Energy Consumption			
		Electrical Usage*		
Process	Process Thermal Energy Usage [kWh(t)]	kWh(e)	Equivalent Thermal [kWh(t)]	Total [KWh(t)]
Mining (Underground)	23.8	1.4	4.1	27.9
Transportation	16.8	0	0	16.8
Desulfurization	78.9	25.0	73.4	152.3
Power Plant Operation	2740.0	-	-	2740.0
Totals	2859.5	26.4	77.5	2937.0

*Based on conversion efficiency for this fuel cycle.

Net Power Plant Output, kWh(e)	1096
Electrical Transmission Losses (8.8% of plant output), kWh(e)	96
Net Electricity Delivered, kWh(e)	1000
Net Cycle Efficiency, %	34.04

8.15.2 Energy Consumption in Oil-Fired Fuel Cycle (40% Central Plant Efficiency) with Surface Water Cooling

	Energy Consumption			
		Electrical Usage		
Process	Process Thermal Energy Usage [kWh(t)]	kWh(e)	Thermal Equivalent [kWh(t)]	Total [kWh(t)]
Extraction	16.5	0.64	1.8	18.3
Transportation	20.6	0	0	20.6
Desulfurization	10.7	57.7	170.8	181.5
Power Plant Operation	2740.0	-	-	2740.0
Totals	2787.8	58.3	172.6	2960.4

Net Power Plant Output, kWh(e)	1096
Electrical Transmission Losses (8.8% of plant output), kWh(e)	96
Net Electricity Delivered, kWh(e)	1000
Net Cycle Efficiency, %	33.78

8.15.3 Energy Consumption in Natural Gas-Fired Fuel Cycle (40% Central Plant Efficiency) with Surface Water Cooling

Process	Energy Consumption: Process Thermal Energy Usage [kWh(t)]	Electrical Usage: kWh(e)	Electrical Usage: Thermal Equivalent [kWh(t)]	Total [kWh(t)]
Extraction	16.5	0.64	1.8	18.3
Transportation	18.9	0	0	18.9
Desulfurization	1.2	22.6	64.2	65.4
Power Plant Operation	2740.0	-	-	2740.0
Totals	2776.6	23.2	66.0	2842.6
Net Power Plant Output, kWh(e)				1096
Electrical Transmission Losses (8.8% of Plant Output), kWh(e)				96
Net Electricity Delivered, kWh(e)				1000
Net Cycle Efficiency, %				35.19

8.15.4 Energy Consumption in Pressurized Water Reactor Fuel Cycle (32.5% Central Plant Efficiency) with Surface Water Cooling

Process	Energy Consumption: Process Thermal Energy Usage [kWh(t)]	Electrical Usage: kWh(e)	Electrical Usage: Thermal Equivalent [kWh(t)]	Total [kWh(t)]
Mining	0	0.16	0.57	0.57
Milling	2.8	0.30	1.07	3.87
U_3O_8 to UF_6	0.8	0.23	0.82	1.62
Diffusion Plant	0	52.20	186.5	186.5
UF_6 to UO_2	0	0.45	1.61	1.61
Fabrication	0	0.09	0.32	0.32
Reprocessing	2.4	0.45	1.61	4.01
UNH to UF_6	0.1	0.04	0.14	0.24
Transportation	0.2	0	0	0.2
Power Plant Operation	3372.3	-	-	3372.3
Totals	3378.6	53.92	192.64	3571.24

Net Power Plant Electrical Output, kWh(e)	1096
Electrical Transmission Losses (8.8% of Plant Output), kWh(e)	96
Net Electricity Delivered, kWh(e)	1000
Net Cycle Efficiency, %	28.0

8.15.5 Energy Consumption in Boiling Water Reactor Fuel Cycle (32.5% Central Plant Efficiency) with Surface Water Cooling

	Energy Consumption			
		Electrical Usage		
Process	Process Thermal Energy Usage [kWh(t)]	kWh(e)	Thermal Equivalent [kWh(t)]	Total [kWh(t)]
Mining	0	0.15	0.53	0.53
Milling	2.6	0.27	0.96	3.56
U_3O_8 to UF_6	0.7	0.21	0.74	1.44
Diffusion Plant	0	43.81	155.13	155.13
UF_6 to UO_2	0	0.56	1.96	1.96
Fabrication	0	0.08	0.28	0.28
Reprocessing	2.0	0.54	1.91	3.91
UNH to UF_6	0.1	0.04	0.14	0.24
Transportation	0.3	0	0	0.3
Power Plant Operation	3372.3	-	-	3372.3
Totals	3378.0	45.66	161.65	3539.65

Net Power Plant Electrical Output, kWh(e)	1096
Electrical Transmission Losses (8.8% of Plant Output), kWh(e)	96
Net Electricity Delivered, kWh(e)	1000
Net Cycle Efficiency, %	28.25

8.15.6 Energy Consumption in High-Temperature Gas-Cooled Reactor Fuel Cycle (38.7% Central Plant Efficiency) with Surface Water Cooling

Process	Energy Consumption: Process Thermal Energy Usage [kWh(t)]	Electrical Usage: kWh(e)	Electrical Usage: Thermal Equivalent [kWh(t)]	Total [kWh(t)]
Mining	0	0.08	0.23	0.23
Milling	1.4	0.15	0.44	1.84
U_3O_8 to UF_6	0.4	0.11	0.32	0.72
Diffusion Plant	0	33.80	99.27	99.27
UF_6 to UO_2	0	0.14	0.41	0.41
Fabrication	0	0.32	0.94	0.94
Reprocessing	0.5	0.13	0.38	0.88
UNH to UF_6	-	-	-	-
Transportation	0.3	0	0	0.3
Power Plant Operation	2832.0	-	-	2832.0
Totals	2834.6	34.73	101.99	2936.59

Net Power Plant Electrical Output, kWh(e)	1096
Electrical Transmission Losses (8.8% of Plant Output), kWh(e)	96
Net Electricity Delivered, kWh(e)	1000
Net Cycle Efficiency, %	34.05

8.15.7 Energy Consumption in Liquid Metal Fast Breeder Reactor Fuel Cycle (40% Central Plant Efficiency) with Surface Water Cooling

Process	Energy Consumption: Process Thermal Energy Usage [kWh(t)]	Electrical Usage: kWh(e)	Electrical Usage: Thermal Equivalent [kWh(t)]	Total [kWh(t)]
Mining	-	-	-	-
Milling	-	-	-	-
U_3O_8 to UF_6	-	-	-	-
Diffusion Plant	-	-	-	-
UF_6 to UO_2	0	0.54	1.48	1.48
Fabrication	0	0.03	0.08	0.08
Reprocessing	1.4	0.37	1.02	2.42
UNH to UF_6	-	-	-	-
Transportation	0.3	-	-	0.3
Power Plant Operation	2740.0	0	0	2740.0
Totals	2741.7	0.94	2.58	2744.28

Net Power Plant Electrical Output, kWh(e)	1096
Electrical Transmission Losses (8.8% of Plant Output), kWh(e)	96
Net Electricity Delivered, kWh(e)	1000
Net Cycle Efficiency, %	36.43

8.16 Literature References

1. "AEC Gaseous Diffusion Plant Operations," ORO-658, U.S. Atomic Energy Commission, Washington, D.C. (February 1968).

2. Benedict, M., "Electric Power from Nuclear Fission," Tech. Rev., 74(1), 32-41 (1971).

3. Benedict, M., and T.H. Pigford, "Nuclear Chemical Engineering," McGraw-Hill, New York (1957).

4. Bennett, L.L., personal communication, ORNL, data based on Fig. A-16 from Wash-1099 and from System Analysis Task Force, Exhibit 22 (November 1971).

5. "Bituminous Coal Facts, 1970," Table 17, National Coal Assn.

6. "The Bull Run Steam Plant," Tech. Report 38, p. 11, Tennessee Valley Authority, Knoxville (1967).

7. Ibid., pp. 415-420.

8. Ibid., p. 394.

9. Chilton, C.H., "Cost Engineering in the Process Industries," p. 314, McGraw-Hill, New York (1960).

10. Clark, C., "4 Cooling Towers to be 60 Feet High," Todd Nuclear Rev., 2(6), 1 (1971).

11. Colby, L.J., R.C. Dahlberg, and S. Jaye, "HTGR Fuel and Fuel Cycle Summary Description," GA-10233, Gulf General Atomic, San Diego (May 25, 1971).

12. "Comparison of Coal-Fired and Nuclear Power Plants for the TVA System," Tennessee Valley Authority, Knoxville (June 1966).

13. Culberson, O.L., "The Consumption of Electricity in the United States," ORNL-NSF-EP-5 (June 1971).

14. "Current Status and Future Technical and Economic Potential of Light Water Reactors," WASH-1082 (March 1968).

15. Davis, J.C., "Reprocessing Plants Rev-Up," Chem. Eng.,78(19), 34-38 (1971).

16. Dynatech Research & Development Co., "A Survey of Alternate Methods for Cooling Condenser Discharge Water," p. 59, Project No. 16130DHS, Cambridge, Mass. (July 1969).

17. Eatherly, W.P., personal communication, ORNL (November 1971).

18. Edison Electric Institute, "Bibliography and Digest of U.S. Electric and Total Energy Forecasts 1970-2050," Publication No. 69-23, p. 87, New York (1969).

19. El-Wakil, M.M., "Nuclear Power Engineering," McGraw-Hill, New York (1962).

20. "An Evaluation of High Temperature Gas-Cooled Reactors," WASH-1085 (December 1969).

21. Faith, W.L., D.B. Keyes, and R.L. Clark, "Industrial Chemicals," 3rd ed., p. 176, 428, Wiley, New York (1966).

22. Cole, S., "Fuel Element Fabrication," Vol. 2, Academic Press, New York (1961).

23. de la Garza, A., "What is Separative Work," from R.H. Dyer, Oak Ridge Gaseous Diffusion Plant.

24. General Electric Co., "Electric Utility Systems and Practices," GEZ-2587, pp. 4.7 and 4.9, Schenectady, New York (1969).

25. Glasstone, S., and M.C. Edlund, "The Elements of Nuclear Reactor Theory," D. van Nostrand, New York (1952).

26. Glasstone, S., and A. Sesonske, "Nuclear Reactor Engineering," D. Van Nostrand, Princeton, N.J. (1967).

27. Glover, T.O., M.E. Hinkle, and H.L. Riley, "Unit Train Transportation of Coal," Bureau of Mines, IC-8444 (1970).

28. Hauser, L.G., K.A. Oleson, and R.J. Budenholzer, "An Advanced Optimization Technique for Turbine, Condenser, Cooling System Combinations," p. 7, Presented at American Power Conference, Chicago, Ill. (April 20-22, 1971).

29. Hausner, H.H., "Int. Symposium on Nuclear Fuel Elements," Reinhold, New York (1959).

30. Hirst, Eric, personal communication, ORNL (November 1971).

31. Kasten, P.R., et al., "An Evaluation of Heavy Water Moderated Organic Cooled Reactors," ORNL-3921 (January 1967).

32. Kasten, P.R., L.L. Bennett, and W.E. Thomas, "An Evaluation of Plutonium Use in High Temperature Gas-Cooled Reactors," ORNL-TM-3525 (October 1971).

33. Kasten, P.R., J.H. Coobs, and A.L. Lotts, "Semiannual Progress Report for Gas-Cooled Reactor and Thorium Utilization Programs for Period Ending Sept. 30, 1970," ORNL-4637 (July 1971).

34. Kaufmann, A.R., editor, "Nuclear Reactor Fuel Elements," Wiley, New York (1962).

35. Keenan, J.H., and F.G. Keyes, "Thermodynamic Properties of Steam," Wiley, New York (1936).

36. Knowlton, A.E., "Looking Over Statistics of Cooling Towers," Elec. World, 142(10), 91-98 (Sept. 6, 1954).

37. Lamarsh, J.R., "Introduction to Nuclear Reactor Theory," Addison-Wesley, Reading, Mass. (1966).

38. Landsberg, H.H., and S.H. Schurr, "Energy in the United States," Random House, New York (1968).

39. Lotts, A.L., and J.D. Sease, personal communication, ORNL (November 1971).

40. Merritt, R.C., "The Extractive Metallurgy of Uranium," Colorado School of Mines Research Institute, Golden, Colo., pp. 390-397 (1971).

41. Ibid., p. 332.

42. Myers, M.L., "Operating and Maintenance Cost Estimates for Steam-Electric Power Plants," ORNL-TM-3537 (July 1971).

43. Nelson, W.L., "Petroleum Refinery Engineering," 4th ed., McGraw-Hill, New York (1958).

44. Ibid., pp. 15, 190.

45. "National HTGR Fuel Recycle Development Program Plan as of December 1970," ORNL-4702 (August 1971).

46. Nichols, J.P., personal communication, based on unpublished ORNL report.

47. North, E.D., personal communication, Nuclear Fuel Services, Rockville, Md. (November 11, 1971).

48. "The Nuclear Industry, 1969," U.S. Atomic Energy Commission (December 1969).

49. "The Nuclear Industry - 1970," U.S. Atomic Energy Commission, Washington, D.C. (December 1970).

50. "Nuclear Reactors Built, Being Built, or Planned in the United States as of June 30, 1970," TID-8200, U.S. AEC (June 1970).

51. ORNL Drawing 70-10233, HTGR Fuel Element Specifications.

52. Perry, R.H., C.H. Chilton, and S.D. Kirkpatrick, "Chemical Engineers' Handbook," 4th ed., pp. 9-6 and 9-8, McGraw-Hill, New York (1963).

53. Ibid., p. 3-71.

54. Peterson, S., and R.G. Wymer, "Chemistry in Nuclear Technology," Addison-Wesley, Reading, Mass. (1963).

55. Prescott, J.H., "ADU Process is Big Contender in Race to Meet Nuclear Power's Fuel Needs," Chem. Eng., 74(10), 146-148 (May 6, 1968).

56. "Proceedings of the American Power Conference," Vol. 32, American Power Conference (1970).

57. Process Research Institute, "Final Report - Energy Requirements from Implementation of Air Pollution Laws," Task Order No. 17, Contract No. CPA 70-1, Cincinnati, Ohio, p. 6 (August 16, 1971).

58. Ibid., p. 5.

59. "Reactor Fuel Cycle Costs for Nuclear Power Evaluation," WASH-1099, Fig. A-20, USAEC, Washington (March 1971).

60. Reardon, W.A., "An Input/Output Analysis of Energy Use Changes from 1947 to 1958 and 1958 to 1963," Pacific Northwest Laboratories, Battelle Memorial Institute, Richland, Wash., p. IV/3 (June 1971).

61. Ibid., p. II/2.

62. Ibid., p. II/3.

63. Edison Electric Institute, "Report of the EEI Reactor Assessment Panel," Publication 70-30, New York (April 1970).

64. Rice, R.A., "System Energy as a Factor in Considering Future Transportation," Paper 70-WA/Ener-8, p. 2, Presented at Am. Soc. of Mech. Engr. Winter Annual Meeting, New York, Nov. 29-Dec. 3, 1970.

65. Ibid., p. 13

66. Rosenthal, M.W., study coordinator, "A Comparative Evaluation of Advanced Converters," ORNL-3686 (January 1965).

67. Salmon, R., "Systems Analysis Task Force Exhibit 22," ORNL (March 20, 1967).

68. Salmon, R., "Systems Analysis Task Force Exhibit 55," ORNL (October 23, 1967).

69. "Selected Background Information on Uranium Enriching," ORO-668, U.S. AEC (March 1969).

70. Shreve, R.N., "Chemical Process Industries," 3rd ed., pp. 309-319, 676-678, McGraw-Hill, New York (1967).

71. "Siting of Fuel Reprocessing Plants and Waste Management Facilities," ORNL-4451 (July 1970).

72. "Southern Governors Conference on Transportation of Nuclear Spent Fuel," Southern Interstate Nuclear Board, CONF-700207, Atlanta (Feb. 1970).

73. "Statistics of Privately-Owned Electric Utilities in the United States 1968," Federal Power Commission, Washington, D.C. (October 1969).

74. "Statistics of Publicly-Owned Electric Utilities in the United States 1968," Federal Power Commission, FPC S-200, Washington, D.C. (December 1969).

75. Stephenson, R., "Introduction to Nuclear Engineering," McGraw-Hill, New York (1954).

76. Stinson, W.J., Gen. Supt., Uranium Operations, personal communication, Eldorado Nuclear Ltd., Port Hope, Ontario, Canada, November 18, 1971.

77. Tsivoglou, E.C., "Nuclear Power: The Social Conflict," Env. Sci. Tech., 5(5), 404-410 (May 1971).

78. U.S. Bureau of Mines, Washington, D.C., anonymous communication (November 1971).

79. U.S. Bureau of Mines, Washington, D.C., I.C. 7922.

80. U.S. Bureau of Mines, Washington, D.C., I.C. 8004.

81. U.S. Dept. of Commerce, "Statistical Abstract of the United States 1970," p. 654.

82. "U.S. Energy Policies," Johns Hopkins (1968).

83. "Uranium Hexafluoride, Handling Procedures and Container Criteria," ORO-651, Rev. 2 (November 1968).

84. Volz, C., personal communication, Bull Run Steam Plant, TVA, Clinton, Tenn. (November 19, 1971).

85. White, D.C., "Energy, The Economy, and the Environment," Tech. Rev., 74(1), 18-31 (Oct./Nov. 1971).

86. Wymer, R.G., coordinator, "Thorium Fuel Cycle," CONF-660254, Proc. of 2nd Int. Thorium Fuel Cycle Symposium, Gatlinburg, Tenn., May 3-6, 1966.

87. Yi, S., personal communication, Wa Chang, Inc., Albany, Oregon (November 1971).

ORNL-MIT-138

INTERNAL DISTRIBUTION

1. S.E. Beall
2-26. L.L. Bennett
27. R.S. Carlsmith
28. W. Fulkerson
29. N.E. Hinkle
30. Joseph Lewin
31. M.L. Myers
32. E.A. Nephew
33. A.S. Quist
34-35. Central Research Library
36. Document Reference Section
37-39. Laboratory Records
40. Laboratory Records, ORNL R.C.
41. ORNL Patent Office
42-61. M.I.T. Practice School

EXTERNAL DISTRIBUTION

62. S.H. Brown, NL Industries, New York, NY
63. Wayne Maddison, GE, Sunnyvale, CA
64. J.E. Vivian, MIT