OAK RIDGE NATIONAL LABORATORY LIBRARIES
3 4456 0555928 6

CENTRAL RESEARCH LIBRARY
DOCUMENT COLLECTION

OA[redacted]AL LABORATORY
operated by
UNION CARBIDE CORPORATION • NUCLEAR DIVISION
for the
U.S. ATOMIC ENERGY COMMISSION

ORNL-TM-3627
cy 44

[redacted]

RADIOISOTOPE PROGRAM (8000) PROGRESS REPORT FOR OCTOBER 1971

A. F. Rupp

OAK RIDGE NATIONAL LABORATORY
CENTRAL RESEARCH LIBRARY
DOCUMENT COLLECTION
LIBRARY LOAN COPY
DO NOT TRANSFER TO ANOTHER PERSON
If you wish someone else to see this document, send in name with document and the library will arrange a loan.
UCN-7969
(3 3-67)

[redacted]

NOTICE This document contains information of a preliminary nature and was prepared primarily for internal use at the Oak Ridge National Laboratory. It is subject to revision or correction and therefore does not represent a final report.

This report was prepared as an account of work sponsored by the United States Government. Neither the United States nor the United States Atomic Energy Commission, nor any of their employees, nor any of their contractors, subcontractors, or their employees, makes any warranty, express or implied, or assumes any legal liability or responsibility for the accuracy, completeness or usefulness of any information, apparatus, product or process disclosed, or represents that its use would not infringe privately owned rights.

ORNL-TM-3627

Contract No. W-7405-eng-26

Isotopes Development Center

RADIOISOTOPE PROGRAM (8000) PROGRESS REPORT FOR OCTOBER 1971

A. F. Rupp

Work Sponsored by
AEC Division of Isotopes Development

NOVEMBER 1971

OAK RIDGE NATIONAL LABORATORY
Oak Ridge, Tennessee 37830
operated by
UNION CARBIDE CORPORATION
for the
U.S. ATOMIC ENERGY COMMISSION

OAK RIDGE NATIONAL LABORATORY LIBRARIES

3 4456 0555928 6

CONTENTS

Page

RADIOISOTOPE PRODUCTION AND MATERIALS DEVELOPMENT 1

REACTOR-PRODUCED ISOTOPES - 08-01-01 1

A. Biomedical Radioisotopes 1

1. Phosphorus-33 1
2. Potassium-43 2

B. Isotopic Power 4

1. Thulium-170 4

C. Reactor Products Pilot Production 5

ACCELERATOR-PRODUCED ISOTOPES - 08-01-02 5

A. Biomedical Radioisotopes 5

1. Gallium-67 5
2. Indium-111 7

B. Accelerator Pilot Production 7

FISSION PRODUCTS - 08-01-03 8

A. Krypton-85 Enrichment 8

B. Cesium-137 Gamma Source Development 10

1. Alternative Cesium-137 Source Form Development 10

C. Cesium-137 Pilot Production 11

1. Processing and Process Status 11
2. Operational Summary 12
3. Current Orders 12
4. Source Fabrication 13

D. Strontium-90 Pilot Production 13

1. Processing and Process Status 13
2. Operational Summary 14
3. Current Orders 14
4. Source Fabrication 15

E. Short-Lived Fission Products Pilot Production 15

Page

SOURCE FABRICATION - 08-01-04 15

A. Radiation Processing 15

1. Radiolytic Oxidation of Dye Waste Solution 15
2. Cobalt-60 Gamma Irradiation Cost of Industrial Effluents 16

B. Radiation Source Development 18

C. Radioisotope Characterization, Quality Control, and Standards 18

1. Radioisotope Characterization 18
2. Radioisotope Special Analysis and Quality Control . . . 18

D. Radiation Safety 19

1. Polonium-210 Source Static Eliminator Examination . . . 19

TECHNOLOGY UTILIZATION - 08-01-05 20

A. Information Center 20

B. Isotopes and Radiation Technology 21

RADIOISOTOPE SYSTEMS DEVELOPMENT 21

OCEANOGRAPHIC AND NATURAL RESOURCES DEVELOPMENT - 08-03-02 . . . 21

A. Sand Transport Study 21

RADIOISOTOPES 23

ADMINISTRATIVE 24

PUBLICATIONS 25

RADIOISOTOPE PROGRAM (8000) PROGRESS REPORT FOR OCTOBER 1971

A. F. Rupp

RADIOISOTOPE PRODUCTION AND MATERIALS DEVELOPMENT

REACTOR-PRODUCED ISOTOPES - 08-01-01

A. Biomedical Radioisotopes

1. Phosphorus-33

The purpose of this project is to develop methods of preparing hundred-millicurie quantities of carrier-free phosphorus-33 containing ≤5% phosphorus-32. The two methods of producing phosphorus-33 being evaluated are based on the irradiation of highly enriched targets of sulfur-33 (>92 at. %) or chlorine-36 (approximately 63 at. %) in a fast neutron flux. Phosphorus-33 (25.2 days; 0.248-MeV β^-_{max}) has both a longer half-life and a lower energy beta than phosphorus-32 (14.3 days; 1.709-MeV β^-_{max}), which makes it advantageous for autoradiography, longer ecological and agricultural experiments than with phosphorus-32, synthesis of tagged complex organophosphorus compounds, and double labeling experiments.

A target containing 1.98 g of $K^{36}Cl$ (63%) was removed from the reactor after an exposure of 9287 MWd. At the time of processing, two weeks after discharge, the yield was 670 mCi of phosphorus-33 with a $^{32}P/^{33}P$ activity ratio of 0.083. The only gamma activity measured was 0.008% chromium-51. This product will be aged for three weeks in order for the $^{32}P/^{33}P$ ratio to decay to 0.05, at which time there will be 370 mCi of product.

The phosphorus-33 yield is somewhat lower than the anticipated yield of approximately 1 Ci. The phosphorus-32 abundance was slightly higher than is consistent with the chlorine-35 abundance of 4%, but this result was anticipated because the target had shown a 14% mass increase from its previous recovery, and a subsequent spark source mass spectrographic analysis indicated calcium and sulfur as chief contaminants. Presence of natural sulfur would enhance phosphorus-32 production. Calcium results as a decay product of potassium. This target will be refined by ion exchange before it is used again.

About 25 g of $K^{36}Cl$ that had been irradiated for approximately 7 years was processed for chlorine-36 to be used as target material. The potassium was isolated, and 17.1 g of ^{40}KCl of approximately 1.5% enrichment was recovered for calutron feed material. Calculations with available potassium cross sections indicate that the potassium-40 content

of irradiated potassium reaches a maximum after approximately 1.5 years at a flux of 10^{15} n/cm^2.sec. The potassium should be stripped from the $K^{36}Cl$ targets at about this interval. The chlorine-36 abundance of this material is 30-35%, and it will be reconstituted as KCl targets for long-term irradiation to enrich chlorine-36.

2. Potassium-43

The objectives of this project are: to prepare potassium-43 by the $^{43}Ca(n,p)^{43}K$ reaction, using isotopically enriched ^{43}CaO targets, in quantities sufficient for medical and biological experiments; to define a method for separating potassium-43 from the target in a purity suitable for medical use; and to establish cooperative programs with medical institutions interested in evaluating its usefulness. Potassium-43, with a half-life of 22.5 hr and gamma-ray emissions of 0.373 and 0.617 MeV, is potentially useful for metabolic and clinical studies of blood flow, rejection of transplanted organs, and kidney function because the dose rate would permit multiple doses.

Three batches of potassium-43 were made. Target 409 was a development run to test a procedure for precipitating the calcium target before purifying the potassium-43 on an ion-exchange column. A portion of this target was shipped only to University of Mississippi for testing in a dog. Data for the runs are summarized in Tables 1 and 2.

Shipments of potassium-43 were made to Johns Hopkins, Peter Bent Brigham Hospital, National Institutes of Health, University of Mississippi, University Hospitals of Cleveland, University of Texas Medical Center in Galveston, and V. A. Center, Wood, Wisconsin.

Table 1. Yield of Potassium-43 from Calcium-43 Targets

	Target 416	Target 409	Target 417
Weight ^{43}CaO (mg)	188[a]	105[b]	171[c]
Irradiation time (hr)	65	64.9	57.1
Product delivery date	9/28/71	10/5/71	10/13/71
Total product at 8:00 AM on delivery date (mCi)			
Potassium-43	12.6	1.4	8.2
Potassium-42	1.4 (11.4%)	0.18 (13.1%)	0.8 (9.4%)

[a]61.63% ^{43}Ca, new target, batch 136326.
[b]49% ^{43}Ca recovered 9/9/71.
[c]61.6% ^{43}Ca recovered 10/7/71 from targets 398 and 416.

Target 409 had a low potassium-43 yield (see Table 2) because it was in a reactor position which had only half the usual fast flux. This calcium oxide was not dissolved in HCl, but was suspended in water and boiled with $(NH_4)_2CO_3$ to convert it to $CaCO_3$, which was filtered out. The filtrate was then loaded on a cation column, and the potassium-43 elution was carried out as usual. It was noted that not all the $(NH_4)_2CO_3$ had been decomposed by boiling because CO_2 was released in the column when elution with HCl began. This caused some channeling with consequent broadening of the potassium-43 elution peak. Another observation was the presence of noticeable amounts of NH_4Cl when the carrier-free potassium-43 fractions were taken to dryness. The NH_4Cl was destroyed by treating with HNO_3 to dryness and then converting back to the chloride with HCl. This process apparently caused loss of about half the potassium-43, which was probably entrained as an aerosol when the NH_4NO_3 decomposed, because the final product did not contain the amount of potassium-43 eluted from the column.

Table 2. Radionuclides Found in Dissolver Sample by Gamma Scanning

Radionuclide	Half-life	Activity at Discharge[a] (mCi)			Activity Concentration at Discharge (μCi/mg of target)		
		Target 416	Target 409	Target 417	Target 416	Target 409	Target 417
Potassium-43	22.5 h	29.9	8.4	27.0	159	80	158
Potassium-42	12.4 h	6.8	2.2	6.4	36	21	37
Sodium-24	15.0 h	0.64	1.4	1.4	3.4	13	7.9
Manganese-56	2.58 h	0.87	2.6	8.4	4.6	25	49
Strontium-87m	2.83 h	59.6	2.3	29.7	317	21	174
Calcium-47	4.53 d	0.33	0.23	0.31	1.8	2.1	1.8
Scandium-46	83.8 d	0.01	1.4	1.1	0.06	13	6.4
Scandium-47	3.35 d	0.19	0.1	0.4	1.0	0.9	2.2
Copper-64	12.8 h	0.5	0.5	2.2	2.6	3.9	13
Lanthanum-140	40.2 h	—	0.01	0.13	—	0.08	0.77
Samarium-153	28.4 h	0.06	0.03	0.13	0.3	0.25	0.76
Cadmium-115	53.5 h	0.03	—	0.07	0.2	—	0.39
Bromine-82	35.4 h	0.02	0.03	—	0.1	0.3	—
Strontium-85	64.5 d	0.01	—	0.01	0.07	—	0.08
Zinc-69m	13.8 h	—	0.02	0.15	—	2	0.88
Barium-131	11.6 d	0.03	—	—	0.1	—	—
Gold-199	3.15 d	—	0.01	0.3	—	0.07	1.8
Gold-198	2.7 d	—	—	0.05	—	—	0.28
Chromium-51	27.7 d	—	—	0.05	—	—	0.28

[a]Total target.

When the precipitated calcium target was dissolved and analyzed, it was found that 18% of the potassium-43 and potassium-42 activities were in the precipitate and 50% of the sodium-24 was in the precipitate. Most of this retention is probably due to trapping of the alkali metal ions within the CaO as it metathesizes to $CaCO_3$. A previous test was made with carrier-free potassium-43, and it was found that precipitation of $CaCO_3$ will not carry the potassium-43. In a future experiment the conversion to $CaCO_3$ will be made by adding solid CO_2 to see if the recovery of potassium-43 can be improved. The precipitation of $CaCO_3$ by this method has already been proven with inactive material, and this approach will eliminate NH_4Cl in the product fractions. These efforts are aimed at handling larger target batches without having to increase column capacity. We have received an inquiry about the availability of 40-mCi batches.

Since previous processing of the potassium-43 involved loading the calcium target on the ion-exchange column, it was continuously purified of the scandium decay product of calcium-45 by eluting the calcium from the column and leaving the scandium. The removal of scandium is necessary because of the radiation problem caused by production of scandium-46. An extraction system using 100% TBP (tributyl phosphate) was investigated. It was found that from a 5 *M* HCl solution, only 30% of the scandium is extracted by one equal volume of TBP, but at 9 *M* HCl the extraction is >95%. Target 417 was stripped from the column with 5 *M* HCl, and the extraction procedure was used. This was done before it was determined that the 5 *M* HCl system is not effective for scandium removal, but there was no extraction of the calcium-47, potassium-43, strontium-85, or chromium-51. There was almost complete extraction of zinc and gold activities, and partial extraction of copper. If the 9 *M* system behaves similarly with respect to the dissolved target components, it will prove highly satisfactory. This change will also greatly reduce the target recovery costs.

B. Isotopic Power

1. Thulium-170

The objectives of this research are to provide sufficient data on thulium-170 to permit assessment of its potential application as an isotopic power source for short-duration missions.

Experiments to determine the vapor pressure of Tm_2O_3 at 1900°C using the small Knudsen cell have been concluded. The total vapor pressure of Tm_2O_3 at 1900°C calculated from the experimental data is 1.90×10^{-7} atm as shown in Table 3. This value is considerably higher than that based on the data from the large Knudsen cell (1.03×10^{-7} atm). Also carried out were experiments to investigate whether the rate of weight change of the empty Knudsen cell will show a drift after an extended time of use. The result with the large Knudsen cell appeared to indicate that the average rate did not change appreciably after more than two months of continuous use.

The difficulties with the vacuum furnace for the vapor pressure experiments (cooling water leakage inside the furnace) are being corrected.

Table 3. Rates of Effusion, and Partial and Total Pressures of Various Vapor Species Above Solid Tm_2O_3 in Small Knudsen Cell at 1900°C

Vapor Species	Rate of Effusion[a] ($g/cm^2.min$) x 10^5	Partial Pressure[b] (atm) x 10^7
TmO	6.33	0.83
Tm	4.73	0.65
O	0.95	0.42
Total	12.01	1.90[c]

[a]Corrected for the weight change of the empty Knudsen cell as well as for the thermal expansion of the orifice.
[b]Corrected for the Clausing factor (a transmission probability).
[c]"Total" vapor pressure of Tm_2O_3.

C. Reactor Products Pilot Production (Production and Inventory Accounts)

Processed Units		Service Irradiations	
Radioisotope	Amount (mCi)	Type	Number
Calcium-47	10	Platinum	1
Copper-67	12	Gadolinium-152	1
Total	22		2

ACCELERATOR-PRODUCED ISOTOPES - 08-01-02

A. Biomedical Radioisotopes

1. Gallium-67

The objectives of this program are to determine the optimal target configuration for gallium-67 (78.2 hr) production by the $^{68}Zn(p,2n)^{67}Ga$ reaction in acceptable purity and quantity and to provide gallium-67 for clinical applications research and development. Interest in this isotope has been spurred by evidence, obtained by the Medical Division

of Oak Ridge Associated Universities (ORAU), of a high uptake of carrier-free gallium-67 by lymphoid tumors in both animals and humans.

Gallium-67 decays by electron capture with the emission of four main gamma rays of 93, 185, 300, and 394 keV with intensities of 42, 24, 17, and 5%, respectively.

Weekly pilot production of gallium-67 was interrupted during this period due to a power outage to the building housing the cyclotron. Due to this power failure, production was suspended for three weeks, and only two preparations of gallium-67 were shipped to customers. Two 100-mCi batches of gallium-67 citrate, packaged as a radiopharmaceutical ready for use, were also shipped to ORAU during this period as part of the Cooperative Group to Study Localization of Radiopharmaceuticals (CGSLR) project. All preparations were tested by ORAU and found to be pyrogen-free as required for human use. The number of bottles loaded was also increased from 10 to 16 so that each participating member of the CGSLR would receive a shipment weekly, rather than on a rotating basis as before. Data obtained from the CGSLR work meeting held in mid-September in Oak Ridge indicated a use factor* for the gallium-67 supplied of only approximately 50%, i.e., approximately half of the gallium-67 supplied was not used on patients. It is hoped that weekly supply of this radiopharmaceutical to each CGSLR member will remedy this situation.

Two preliminary electroplated zinc (natural) on copper cyclotron targets that had been prepared from a chloride system[1] have been test irradiated in the ORNL 86-Inch Cyclotron to determine the feasibility of such a target design for large-scale gallium-67 production. Both targets had approximately 5-mil-thick natural zinc plates on flattened, 1/2-in.-OD copper tube substrates. The first target (actual plate thickness measured to be 4.5 mils) was bombarded at a 25° angle for 1 hr with 22-MeV protons at a current of 203 μA. Upon inspection of the irradiated target, the zinc plate was observed to have melted in the area where the most intense part of the beam struck, and both the cyclotron yield and the production rate were lower than expected, approximately 27 mCi/hr and approximately 135 mCi/mA-hr, respectively. Similar production parameters from the 20-mil zinc tubes in current use would be approximately 90 mCi/hr and approximately 450 mCi/mA-hr, respectively. The second target (actual plate thickness 5.0 mils) was bombarded under similar conditions, but at an angle of 15° to the beam. This target showed no visible signs of beam damage, and produced significantly more gallium-67 (cyclotron yield ∿41 mCi/hr and production rate ≈200 mCi/mA-hr). It is estimated that, if an enriched zinc-68 target had been used, a production rate of approximately 1 Ci/mA-hr or a cyclotron yield of approximately 200 mCi/hr could have been achieved. This target design will be investigated further during the next quarter, with emphasis on plate preparation, quality, and irradiation endurance.

---

*Use factor = $\frac{\text{(Number of patients scanned)(2.5 mCi/patient)}}{\text{mCi received}} \times 100$

[1]A. F. Rupp, *Radioisotope Program (8000) Progress Report for July 1971*, ORNL-TM-3526, Oak Ridge National Laboratory, p. 4.

2. Indium-111

The objectives of this program have been to define and optimize the pertinent production parameters for the economical production of indium-111 of satisfactory quality for radiopharmaceutical manufacture. The current objectives are to obtain practical operating experience of the procedures developed by pilot production and to provide this radionuclide to interested customers as a special research material — in batch lots — for their evaluation. Indium-111 has been suggested for such studies as spinal-cerebral cisternography, aerosol lung studies, delayed brain scanning, visualization of the lymphatic system, metabolic studies of indium-labeled macroaggregates and colloids, and tumor localization. Indium-111 has gamma emissions of 173 keV (89%) and 247 keV (94%) ideally suited for external detection and an optimal half-life (2.83 days) for labeling and distribution studies which must be carried out over 24 hr or longer.

Two batches of indium-111 were prepared, and portions were supplied to interested clinicians as a special research material. The power failure mentioned earlier (see gallium-67 section) also affected the indium-111 production and kept the level of operation lower than scheduled. Production has since been resumed on a weekly basis and will be continued at such as long as demand warrants.

B. Accelerator Pilot Production (Production and Inventory Accounts)

Table 4 gives the October 1971 accelerator runs for ORNL and non-ORNL programs.

Table 4. Accelerator Irradiations and Runs for October 1971

Product	No. of Runs	Time (hr:min)			Total Charges
		Beam	Misc.	Total	
		ORNL Programs			
Cobalt-56	1	4:00	1:00	5:00	$ 600
Cobalt-61	10	21:55	7:20	29:15	2,862
Gallium-67	2	7:20	2:25	9:45	946
Indium-111	2	5:00	2:10	7:10	736
					$ 5,144
		Non-ORNL Programs			
Cobalt-57	1	50:00	1:15	51:15	$ 8,450
Germanium-68	1	8:00	1:15	9:15	1,533
Yttrium-88	1	8:00	1:15	9:15	1,380
					$11,363

FISSION PRODUCTS - 08-01-03

A. Krypton-85 Enrichment

Units C and D (see Fig. 1) are at equilibrium and holding until a new supply of feed krypton is available. Unit B is still not operating properly, and the source of the trouble has not yet been located. The small drop in count rate on units B, C, and D is due to the seasonal drop in ambient temperature, which causes a partial contraction of the radioactive gas out of the counter section of the system.

Unit	Activity in Unit (Ci)	Time Since Last Product Removal (days)	Count Rate in Product Section (counts/min) Sept. 1971	Oct. 1971
A	120	100	3,600	4,700
AB	Xenon	60	-	-
B	120	100	1,800	1,600
C	1784	290	6,900	6,400
CD	2056	60	12,850	14,550
D	1647	290	6,900	6,600

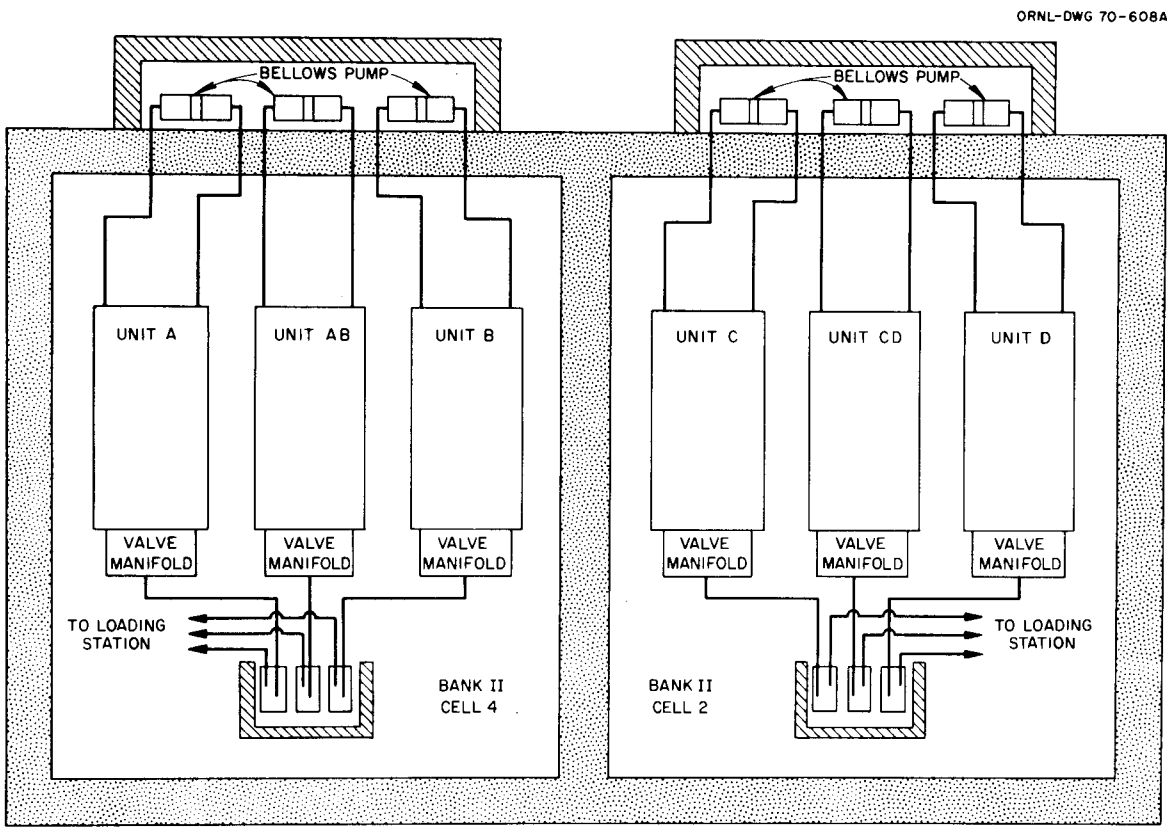

Fig. 1. Schematic Arrangement of Krypton-85 Columns.

Column CD, from which the 43.8% krypton-85 was obtained, still has an overall high enrichment level, and it is planned to add intermediate enrichment level product from the other columns to this column to continue producing product in the >40% enrichment range. Table 5 shows the material balance for this column starting from just prior to the high enrichment operations.

Table 5. Column CD Material Balance

Date	Transactions In or Out			Inventory at Date (curies)	Count Rate at Date
	Curies	Liters	Conc. % ^{85}Kr		
12/16/69	-	-	-	1906	8,900
3/2/70	-	-	-	1906	13,800
	-407	-1.1	26.4	1499	9,900
	-5	-1.9	0.2	1494	9,900
	+170	+1.0	12.5	1664	9,900
3/20/70	-299	-1.0	21.0	1365	
	-136	-0.5	19.9	1229	
	+125	+0.9	10.8	1354	5,600
3/25/70	+259	+2.4	8.0	1613	5,900
4/2/70	-161	Estimated shortage		1552	5,900
5/13/70	-10	-3.8	0.2	1542	8,050
	+215	+4.8	3.3	1757	8,050
9/18/70	-10	-3.8	0.2	1747	
	+205	+0.8	18.7	1952	
	+148	+0.9	12.1	2100	
	+181	+0.8	16.5	2281	11,050
1/12/71	-10	-3.8	0.2	2271	
	+284	+2.0	10.7	2555	10,070
5/3/71	-246	Decay plus loss		2309	17,850
7/9/71	-10	-3.8	0.2	2299	18,100
	+290	+1.9	11.0	2589	18,100
8/23/71	-533	-0.9	43.8	2056	11,700
10/21/71	-	-	-	2056	14,550

B. Cesium-137 Gamma Source Development

Cesium-137 chloride has been the compound of choice for radiation sources in applications of moderate temperature conditions. In many respects cesium chloride is the ideal compound; the cesium weight per unit volume is high, the radiation resistance of the CsCl is excellent, the compatibility with stainless steel at ambient temperatures is excellent, and its preparation is straightforward. However, the projected conditions of use of cesium-137 gamma sources are increasingly severe with respect to temperature, and some applications indicate the need for a cesium source material which has low solubility. In view of these projected conditions of use, the testing of $^{137}CsCl$ at elevated temperatures is being done and the development of a low solubility, temperature resistant source form of cesium is being studied.

1. Alternative Cesium-137 Source Form Development

Chemical analysis is still not complete for the silicon content of the products of the types $Cs_2O \cdot Al_2O_3 \cdot nSiO_2$ and $Cs_2O \cdot MgO \cdot nSiO_2$. However, the solubility data for the products are now available and are used below as a guide in determining the extent of conversion.

a. Alternative Preparation Methods for $Cs_2O \cdot Al_2O_3 \cdot nSiO_2$

The primary method (Method 1) employed in the preparation of the compounds $Cs_2O \cdot Al_2O_3 \cdot nSiO_2$ thus far has been the stagewise slurry reaction by first forming the water-glass type of compound $Cs_2O \cdot nSiO_2$ which is then reacted with Al_2O_3. Two alternative methods have been studied for preparation of the same compounds to investigate whether they are more efficient than the one mentioned above. The first alternative method (Method 2) was preparation of cesium metaaluminate $CsAlO_2$ (or $Cs_2O \cdot Al_2O_3$) followed by reaction with SiO_2. From the thermodynamic data, it was estimated that formation of $CsAlO_2$ would be less favorable than formation of $Cs_2O \cdot nSiO_2$ under comparable conditions. This appeared to be the case as illustrated in Table 6. Since cesium metaaluminate is expected to be water-soluble, the solubility of the product may be considered as an indication of the extent of conversion. Based on this concept, the data in Table 6 indicate that the extent of conversion to cesium aluminate is practically negligible up to 1000°C. The conversion was still far from complete even at 1000°C as indicated by the presence of a significant amount of insolubles (26.2 wt %). In comparison, formation of $Cs_2O \cdot nSiO_2$ was practically complete under the same conditions discussed previously.[2]

---

[2]A. F. Rupp, *Radioisotope Program (8000) Progress Report for August 1971*, ORNL-TM-3558, Oak Ridge National Laboratory, p. 8.

Table 6. Preparation of $Cs_2O \cdot Al_2O_3$

Sample No.	Drying or Calcining Conditions	Wt % of Insolubles in Distilled Water
	Initial reaction mixture	32.3
OC-12	130-140°C, 16 hr	32.9
OC-13	800°C, 1 hr	34.0
OC-14	1000°C, 1 hr	26.2

The second alternative method (Method 3) studied in the preparation of $Cs_2O \cdot Al_2O_3 \cdot nSiO_2$ was the simultaneous slurry reaction of the three reactants Cs_2CO_3, SiO_2, and $Al(OH)_3$ in the desired proportion. This method was found to be appreciably less efficient than the stagewise reaction method.

b. Assessment of Results for $Cs_2O \cdot Al_2O_3 \cdot nSiO_2$

Of several methods studied for preparation of the compound $Cs_2O \cdot Al_2O_3 \cdot nSiO_2$, the most efficient one is the stagewise reaction method that initially forms the water-glass-like compound $Cs_2O \cdot nSiO_2$ which then reacts with $Al(OH)_3$ to produce the desired compound. This conclusion confirms the earlier speculation[3] that formation of a water-soluble compound (such as $Cs_2O \cdot nSiO_2$) from two reactants in the initial step would facilitate reaction with the third reactant [$Al(OH)_3$ in this case] leading to a favorable conversion to the compound $Cs_2O \cdot Al_2O_3 \cdot nSiO_2$.

A product containing as much as 86 wt % of water insolubles (as determined for powdered samples) could be obtained by the above method that requires no pressure vessel. The product appeared thermally stable with no visible sign of phase transformation or melting up to 1350°C when viewed with the high-temperature microscope. Based on very limited x-ray diffraction data, such product would probably contain $Cs_2O \cdot Al_2O_3 \cdot 2SiO_2$ as the major compound mixed with other types of cesium aluminosilicates. The overall composition will be confirmed when the chemical analysis is completed. At that time, estimation of the volumetric specific activity will be made for the actual products. Additional x-ray diffraction studies would also be required for selected samples to confirm the extent of conversion, as well as the types of compounds present.

C. Cesium-137 Pilot Production (Production and Inventory Accounts)

1. Processing and Process Status

Four batches of cesium-137 feed containing a total of 67,500 Ci were processed through the mainstream crystallizers. Three batches of "old" CsCl product which were contaminated with sulfate were also recycled to

[3]A. F. Rupp, ORNL-TM-3526, p. 10.

the cesium-137 crystallizer system making a total system inventory of approximately 250,000 Ci. Purification operations are in progress, and product processing should begin early in November. Present plans call for the processing of approximately 400,000 Ci of cesium-137 in a continuous campaign.

Element analysis of the cesium-137 unloaded from the HAPO-IC cask in September showed the expected sodium, potassium, and rubidium contaminants at levels very similar to those in the first HAPO-IC shipment. A comparison is given below:

Element	Mole per Mole Cesium	
	First Shipment	Second Shipment
Potassium	0.35	0.41
Sodium	0.14	0.20
Rubidium	0.03	0.03

The current cesium-137 process status is as follows:

Item	Cesium-137 (Ci)
In-process material	997,000
$^{137}CsCl$ products	46,500
Sources in fabrication	0
Completed sources awaiting shipment	71,000

2. Operational Summary

Item	October 1971		FY 1972	
	No.	Amount (Ci)	No.	Amount (Ci)
HAPO shipments received	0	0	1	414,200
Product batches prepared	0	0	6	70,000
Sources fabricated	0	0	32	50,000
Special form containers loaded	0	0	13	600
Sources shipped	0	0	15	18,500
Special form containers shipped	2	1,000	13	1,500

3. Current Orders

An order is on hand for ∿138,800 Ci of cesium-137 as bulk powder to be scheduled and shipped as released by customer.

Current orders for cesium-137 as sources or bulk powder are shown on page 13.

Customer	Amount (Ci)	Estimated Shipping Date
Brookhaven National Laboratory	203,000	FY 1972
Atomic Energy of Canada	15,500	March 1972
Lockheed-Georgia Company	~35,000	a
American Nuclear Corporation	125	a
Total	253,625	

[a]Sources are in storage awaiting receipt of customers' containers.

4. Source Fabrication

Two powder cans, each containing 500 Ci of cesium-137, were shipped to the 3M Company.

D. Strontium-90 Pilot Production

1. Processing and Process Status

A full-scale (40,000 Ci) test batch of strontium-90 was run to check the separation of rare earths from strontium. The rare earths were precipitated as the oxalates from a solution 0.1 *M* in HNO_3 containing approximately 20 g per liter of strontium, approximately 0.5 g per liter calcium, and approximately 1.5 g per liter of mixed rare earths (La, Nd, Pr). After the oxalates had been filtered out, the filtrate was processed by the standard "strontium titanate" procedure which usually involves precipitation of the strontium with ammonium carbonate in a slurry of TiO_2. In this case, however, no TiO_2 was used; so the precipitate was nominally $^{90}SrCO_3$. The precipitate was filtered out and allowed to dry of its own heat. Then repetitive calorimetric assays were run over a period of 48 hr to insure that the ^{90}Sr-^{90}Y equilibrium had been obtained.

Spectrographic analysis of the carbonate precipitate showed that the weight ratio of rare earths to strontium had been reduced from 0.075 to 0.028, for a removal efficiency of 63% as compared to the approximately 80% removal indicated by laboratory work. As expected, there was no indication of calcium separation, and other detectable contaminants totaled less than 1 wt %. Based on the elemental analysis and the previously determined $^{90}Sr/Sr$ ratio, the power concentration of this material should have been 0.286 W/g, but the calorimetrically determined value was 0.265 W/g. Three samples were calcined for 8 hr at 1300°C in the argon atmosphere of the hot press. Assuming calcination from the carbonate to the normal oxides of the various known components, a weight loss of 30.8% was predicted; the measured weight loss was 30.7 ± 0.7%. Although the measured weight loss was in good agreement with the calculated loss, the resulting "oxide" again showed a lower power concentration than expected — 0.371 W/g versus 0.395 W/g. Repeated

analysis failed to define the discrepancy. A test titanate batch is being prepared by blending/calcining on the basis of a 2:1 mole ratio of known components to TiO_2. This material will be tested in November.

The current strontium-90 process status is as follows:

Item	Strontium-90 (Ci)
In-process material	916,000
Strontium-90 products	458,700
Sources in fabrication	0
Returned SNAP sources	340,900
Completed sources awaiting shipment	64,600

2. Operational Summary

Item	October 1971		FY 1972	
	No.	Amount (Ci)	No.	Amount (Ci)
HAPO shipments received	0	0	0	0
Product batches prepared	1	40,800	1	40,800
Sources fabricated	1	49,600	1	49,600
Special form containers loaded	0	0	0	0
Sources shipped	1	49,600	1	49,600
Special form containers shipped	0	0	0	0
Shipments to customers	0	0	12	45,900

3. Current Orders

Current orders for strontium-90 as sources or bulk powder are as follows:

Customer	Amount (Ci)	Estimated Shipping Date
U. S. Navy	411,380	a
U. S. Navy	208,000	a
Total	619,380	

[a]Further work and subsequent shipment are pending receipt of instructions from customer.

4. Source Fabrication

Fabrication of a 49,600-Ci (337 W) strontium-90 source (Sentinel-8) was completed. This source was welded by the plasma-arc technique which yielded an average weld penetration of 0.119 in. After completion of the necessary source tests, this source was loaded into a generator and shipped to Teledyne.

E. Short-Lived Fission Products Pilot Production (Production and Inventory Accounts)

Isotope	Number of Batches	Amount (Ci)
Xenon-133	3	∿1000
Iodine-131	2	45
Zirconium-95	1	8

SOURCE FABRICATION - 08-01-04

A. Radiation Processing (Not Supported by 08 Program; WFO Account)

Pollution of rivers by dye waste effluent from textile mills and chemical manufacturers is a serious problem. Past experimental work has shown that radiolytic oxidation of the waste solutions may be a practical method of destroying certain dyes and chemicals. The purpose of this investigation is to study and develop an economically feasible method to do so. A cobalt-60 gamma radiation source is being used to irradiate samples under a high pressure oxygen atmosphere. The solutions include both individual dyes and mixtures of dyes. This work is being supported by the American Association of Textile Chemists and Colorists (AATCC) and the Environmental Protection Agency.

1. Radiolytic Oxidation of Dye Waste Solution

In the previous work at this Laboratory on the radiolytic oxidation of the waste effluent, emphasis was placed on the conditions needed to decolorize dyes present. For the past two months emphasis has been placed on determining changes that occur in the dye molecule when it is decolorized and the by-products of the radiolytic oxidation. The first dye investigated was Intracolor Intrazone Black 2BN. The pure material was dissolved in water to simplify separation from the other constituents of the effluent after the irradiation.

About 150 ml of solution containing 40 mg of dye was irradiated under 1500 psi oxygen to a total dose of 3×10^7 R cobalt-60 gamma. Carbon dioxide was identified in the waste gas. The solution was slowly

evaporated to recover the solids for analysis. The solids were colorless when dissolved in H_2O, and the solid yield was about 40 mg. A spectrum of this dye as a dispersion in a solid KBr pellet was made as contrasted to the spectrum made from a sample dispersed in mineral oil. The spectrum had more detail than the previous one. The SO_3^{2-} had been partially oxidized to give SO_4^{2-}, identified by peaks at 610, 640, and 1130 cm^{-1}. The SO_3^{2-} peaks were still found at 900 and 980 cm^{-1}. Two broad new peaks at 1440 and 1620 cm^{-1} were found and are probably due to the COO^- group from the oxidation of the CH_3 group. The strong broad peak at 3420 cm^{-1} was found both in the original and the irradiated sample and was probably due to secondary amine structure. No identification of the —N=N— group was possible since this group is infrared inactive.

Intracolor Intrasperse Blue BGN was the second dye investigated. A solution containing about 400 mg per liter was used for this work. About 150 ml of the solution was oxidized at 1500 psi oxygen for a total dose of 3×10^7 R cobalt-60 gamma. The weight loss of the dye was ~75%; the exhaust gas contained carbon dioxide. The solution was evaporated to obtain dry solids for infrared spectrum analysis. The spectrum of the blue dye was compared with the spectrum of the solid obtained from the irradiated sample. The irradiated solid appears to contain the original anthraquinone structure with some of the secondary amine destroyed or converted to a primary amine. The two new carbonyl groups were identified by the CO bands at 1660 and 1710 cm^{-1}. A proposed H-bond resonance structure may help to account for the bands shown. This resonance did not show up in the original dye.

The third dye investigated was Intracolor Intralite Fast Brilliant Blue 2GLL. The starting solution contained 400 mg per liter. About 150 ml of the solution was oxidized under 1500 psi oxygen to a total dose of 7.5×10^6 R cobalt-60 gamma. The solid content of the irradiated solution contained about 75% of the starting material. The exhaust gas contained carbon dioxide. The irradiated solution was evaporated to dryness to recover the solids. The spectrum of the blue dye was compared with the spectrum of the solid remaining after irradiation. The spectrum of this material was difficult to interpret due to the number of possible groups that might give bands in the 100-1200 cm^{-1} region of the spectrum. Secondary amines were observed in both samples. An aryl peroxide group was observed in the irradiated solid, and the chloride band appears in both samples. It also appears that the CO group was responsible for lines found at 1660 and 1700 cm^{-1} in the irradiated sample which show oxidation of the benzene ring. The SO_3^{2-} bands at 910 and 1000 cm^{-1} did not appear in the irradiated sample, and the band was too wide in the 100-1200 cm^{-1} region to determine the presence of SO_4^{2-}.

2. Cobalt-60 Gamma Irradiation Cost of Industrial Effluents

A bar to the use of gamma radiation in treating large volumes of effluents containing parts per million of radiation-sensitive contaminants is the necessity for irradiating the water component to reach the contaminant. Consideration has been given to the use of an activated carbon bed to concentrate organic contaminants in textile effluents, pulp and paper effluents,

and sewage effluents. Calculations can be made to determine radiation requirements related to various assumptions of activated carbon capacity, flow rates, and organic load in the effluent. The calculations show the system to be controlled by the adsorption rate of the organic contaminant on the charcoal, the time for destruction of the adsorbed organic, the desorption rate of the radiolysis products from the charcoal, the total dose requirement for destruction of the organic material, and the rate of radiolysis of the organic contaminant.

Some experiments have been conducted with dyes, sewage effluents, and pulp and paper effluents. From these experiments a dose of 10^6 R for oxidation of organics on charcoal was derived for use in these calculations. Adsorption capacity of the charcoal is assumed to be 10% by weight (experimental and literature), adsorption time 10 min (experimental with dyes, will vary with dye structure), and the density of the water/charcoal/organic load in an irradiation chamber is assumed to be 1 (experimental).

Since the maximum flow rate is fixed by the adsorption rate of organics on charcoal, a table of radiation requirements can be constructed (Table 7). From the calculations used to prepare this table, it appears that effluent containing 100 ppm adsorbable organic can be treated at a radiation cost of approximately $0.01 per 1000 gallons of throughput.

Table 7. Variation in Irradiation Cost as a Function of Organic Loading on Charcoal and Dose Rate to a Total Dose of 10^6 R

Organic Loading (%)	Exposure Time for Organic Oxidation (hr)	Required Dose Rate (erg/hr)	Curies of Cobalt-60	Cost of Cobalt-60[a]		
				Total	Per Year[b]	Per 1000 gal[c]
2.88	24	5.48×10^{13}	12.83×10^4	$51,320	$6,620	$0.036
5.76	48	2.74×10^{13}	6.415×10^4	$25,660	$3,310	$0.018
8	66.7	1.97×10^{13}	4.62×10^4	$18,480	$2,380	$0.013
10	83.3	1.58×10^{13}	3.70×10^4	$14,800	$1,909	$0.010
20	166.5	0.79×10^{13}	1.85×10^4	$ 7,400	$ 955	$0.005

[a] $0.40/Ci. [b] Half-life = 5 years. [c] Gallons of throughput.

Optimum conditions need to be experimentally determined. For example, the dose-rate dependence has not been established and whether or not radiation-induced oxidation is favored by a long organic residence time on charcoal is not clear. However, since the maximum quantity of oxygen available for the oxidation reaction is favored by a long organic residence time on the charcoal, one might expect that low dose and long residence time of organic on charcoal would provide the most favorable conditions.

The cost of radiation treatment using the adsorption method appears favorable. Dose to the water is low depending upon the flow rate required to provide sufficient residence time in the charcoal column for the organic to be adsorbed. Thus, if the dose rate to the mass within the irradiator is 10^6 R/hr, the dose to water flowing at a rate equal to one column volume

for 10 min will be one-sixth of the 1-hr dose or 1.67×10^5 R. Reduction of BOD, COD, and destruction of pathogens must depend upon their adsorption since the dose to effluent flowing through the system is not adequate for sterilization as normally visualized for radiation treatment.

The work on the new high capacity dynamic irradiaton system will continue; it will be tested in November. Further work on the identification of the products of the gamma irradiation of the four dyes under study will be performed.

B. Radiation Source Development

Laboratory effort is being directed toward fabrication of a uniform beta source as part of the extrapolation chamber work. Films uniform to approximately 1 part in 30 were prepared by pouring a modified vinyl polymer on a flat horizontal plate, followed by air curing. This provided a film with a variation of approximately 0.001 in. in a thickness of 0.030 in. for a 4-in. square. Radiation degradation tests are being carried out prior to incorporating strontium-90 chloride in the polymer.

C. Radioisotope Characterization, Quality Control, and Standards

1. Radioisotope Characterization

S. A. Reynolds has been formally appointed an advisor to the American Nuclear Society Information Center on Nuclear Standards (ICONS) and is also beginning work with the standards committee, ANS-16, of the Isotopes and Radiation Division. Questionnaires returned by prospective members of ANS-16 were reviewed, as well as a list of categories of standards work prepared by the chairman. Local information efforts included answering inquiries about the decay scheme and half-life of tellurium-123m, monitoring and disposal of radiopharmaceutical xenon-133, cross sections of certain rare-earth nuclides, and identification of radon daughters in an air filter. In relation to an environmental-impact problem, an equation was derived for the discharge of a radionuclide over a time period such that its decay is significant. In the limiting case where the discharge time, t, is long compared to the half-life, the amount discharged as a fraction of the initial amount present is $1/\lambda t$, where λ is the radioactive decay constant.

2. Radioisotope Special Analysis and Quality Control

At the annual analytical conference October 12-14, the report of the NRC standards panel was exhibited, announcement was made of a measurement seminar (including radioactivity standards) to be held at the National Bureau of Standards, and copies of a bibliography were distributed.

In answer to an inquiry, a brief literature review was made to establish probable impurities in molybdenum-99 products produced by neutron capture and by fission. The local assay method for gallium-67 was transmitted

to ORAU. The basis for assay, in the absence of a gallium-67 standard, was explained and the effect of assumptions about decay scheme was discussed.

It was desired to have a non-instrumental method for detection of as little as 10^{-5} *M* free HCl in ^{137}CsCl material. Four indicators (one mixed) were tried in "cold" experiments, and two showed satisfactory sensitivities under laboratory conditions. Their colors were not suitable for viewing through cell windows. It was recommended that electrometric pH equipment be installed when feasible.

D. Radiation Safety

1. Polonium-210 Source Static Eliminator Examination

A polonium-210 static eliminator which had been used in a printing shop was examined for damage and possible contamination leakage. The source was believed to have been damaged by being cleaned with an organic solvent in the print shop.

The static eliminator was constructed of a long metal holder for the source with a screen covering for protection of the source surface. The source was constructed of polonium-210 microspheres held on an aluminum substrate by an epoxy-type binder.

A microscopic examination of the source strips revealed an uneven distribution of microspheres within the binder. The binder depth was thin in areas of few or no microspheres and thicker in areas of high microsphere density. No estimate could be made as to the amount of microspheres that would be missing since spots of former adhesion for missing microspheres were not detected. Evidence of solvent damage to the source was apparent because two types of crystalline structure were found at various locations on the source, with one type of crystalline structure still being wet by an unknown solvent. Two organic solvents in use at the time in the print shop were obtained and tested on the source. One of the solvents quickly dissolved the outer layer of the binder and softened the binder into a sticky adhesive. As the binder dryed it hardened, and the drying solvent crystallized the binder in the form found in the dry areas. The other solvent did not affect the binder.

The microspheres were leached in the organic solvents and water. Small amounts of activity were leached from the microspheres by both the organic solvent and the water.

Smears of the source were found to be principally from the polonium-210 microspheres.

TECHNOLOGY UTILIZATION - 08-01-05

A. Information Center

In October, 104 requests for information were filled by dispatching 217 items. Translations included three letters for Sales, the articles listed below, a Spanish item on the Argentinian irradiator work, a French pacemaker item, and a Russian table of contents for DID. Of the 45 reviews of Eurisotop booklets requested by DID for inclusion in *Isotopes and Radiation Technology*, 34 were completed. Work was started on DID Project Summaries and on the ten industry briefings. A list of reviews is shown below:

Title	Author(s)	Status (% Complete)
	Radioisotope Briefings for Industry	
Minerals	R. H. Lafferty	80
Aerospace	Helen P. Raaen	
Building	F. E. McKinney	
Coal	R. H. Lafferty	
Food	F. E. McKinney	
Paint	R. E. Greene	Not begun - awaiting DID approval of format
Petrochemicals	H. P. Raaen	
Plastics	R. E. Greene	
Pulp and Paper	Martha Gerrard	
Stone, Clay, and Glass	R. H. Lafferty	
Textiles	Martha Gerrard	
	State-of-the-Art Reviews	
Iodine-125	Martha Gerrard and P. S. Baker	90
Technetium-99m: Preparation and Uses	Martha Gerrard and P. S. Baker	65
Radioisotopes in the Textile Industry	F. J. Miller and P. S. Baker	In Reproduction
Self-Diffusion in Liquids	F. J. Miller	75
Grain Disinfestation	F. E. McKinney	20
Snow Gaging and Water Management	U. S. Department of Agriculture	Not recieved
Radioelectrochemistry	Helen P. Raaen	90
The Environment and Isotopes	Helen P. Raaen	98
Semiconductors	Helen P. Raaen	20
Patent Literature on Process Radiation and Irradiator Design, Part 2. British and Canadian Patents, 1950 through 1970	R. E. Greene, Helen S. Warren and P. S. Baker	50
	State-of-the-Art Reviews for *Isotopes and Radiation Technology*	
Radioisotopes in the Steel Industry, Part 3	Republic Steel	Not received
Potato Sprout Inhibition by Radiation, Part 2	F. E. McKinney	50
	Other Reports	
Selected Abstracts of World Literature on Production and Industrial Uses of Radioisotopes, Part 3 of 1971	Martha Gerrard and P. S. Baker	50
Use of Isotopes in Monitoring and Control of Environmental Pollution	W. E. Mott and Martha Gerrard	90
Fruit and Vegetable Bibliography (revision)	F. E. McKinney	98
Iodine-131 Production Methods	French report being translated by Martha Gerrard	50
Presowing Irradiation of Seed	Russian book being translated and edited by Martha Gerrard	Withdrawn as IIC report; will be issued as ORNL translation
Special Sources (supplement)	F. E. McKinney	80
Bibliography of DID Contractor Publications	P. S. Baker	80
Effect of Gamma Radiation on Nonalcoholic Drinks and Wine - Brandy Products	Russian book being translated by Martha Gerrard and P. S. Baker	50
Isotope Education Experiments	Roberta Shor	65
List of AEC Radioisotope Customers, FY 1971	Ruth Curl (compiler)	75

B. Isotopes and Radiation Technology

Articles for *Isotopes and Radiation Technology* 9(4) were started. Articles published in *Isotopes and Radiation Technology* 9(1) (Fall 1971) are as follows:

P. S. Baker (Summarized), Highway Applications of Nuclear Techniques

Martha Gerrard, Recent DID Radiometric-Technique Developments

Martha Gerrard (Summarized), Development of a Radioactive-Pebble-Bed Chemical-Reactor System--Phase III

Martha Gerrard (Summarized), Use of Radioisotopes in Canada

R. E. Greene (Summarized), Recovery of ^{147}Pm from Savannah River Plant Waste

R. E. Greene (Summarized), Radiation-Initiated Emulsion Polymerization: Pilot-Plant Operation and Economic Feasibility Study

R. E. Greene (Summarized), Polymer Grafting to Inorganic Substances

F. E. McKinney (Summarized), Radiation Pasteurization of Gulf Shellfish

RADIOISOTOPE SYSTEMS DEVELOPMENT

OCEANOGRAPHIC AND NATURAL RESOURCES DEVELOPMENT - 08-03-02

A. Sand Transport Study

Radionuclides appear to be useful tools to study sand transport phenomena and, although many experiments have been conducted to demonstrate their effectiveness as tracers, little is known concerning whether or not the dynamic systems in which they are used can be tagged well enough to achieve quantitative data leading to an understanding of basic mechanisms. The Radioisotope Sand Tracing (RIST) study has progressed through equipment development to the point where important system tagging parameters can be studied.

A RIST field experiment was conducted at Point Mugu Naval Air Station, Oxnard, California, from September 23 through October 7, 1971. Participants in the experiment were the Isotopes Development Center (ORNL), the Coastal Engineering Research Center (USACE), and the Los Angeles District Corps of Engineers (USACE).

The field experiment was composed of the following tests:

1. Continuous injection of tagged sand

2. Bottom elevation monitor

3. Plug injections and sampling

4. Line injections with areal survey

The first three tests were conducted solely in pursuit of volume transport, and the last one was also conducted in support of this goal. Field procedures for these tests are listed below.

1. Continuous Injection of Tagged Sand Test

A sand volume transport model constructed at CERC indicated the possibility of experimentally determining the volume rate of transport of sand by continuously injecting tagged sand at the shoreward edge of the surf zone, while sampling the swash zone downstream of the injection site. When an area downstream became stable with respect to the tagged sand concentration, equilibration was achieved (natural sand system properly tagged), and time measurement with tagged sand concentration would yield volume transport.

In an attempt to remove one variable from the measurement, the test was conducted during a period of relatively flat tide cycle to give a constant width of the swash zone. To simulate a constant injection, a standard packet of $^{198,-199}$Au-tagged sand and one liter of dye-treated sand were injected at 10-min intervals for 6 hr. Sampling downstream was on a continuous basis using the RIST survey equipment. After 5-1/2 hr the count rate had not completely stabilized but was sufficiently constant to begin sample collection.

Samples, 100 cm^3 approximately 1 cm thick, were collected 300 ft and 600 ft downstream (south) of the injection point. Preliminary measurements on the samples indicate sufficient tagged sand concentration for statistical validity.

2. Bottom Elevation Monitor

During the plug injection tests it is imperative to know of any changes (fill or erosion) in the sand surface because the surface concentration of tagged material is a major factor in the calculations. The only reasonable way to continuously monitor the elevation of the sand surface in the ocean is with a radioisotope.

The monitor uses a cesium-137 (100-mCi) source buried approximately 6 in. deep in the sand and a scintillation detector positioned over the source approximately 8 in. above the sand surface. The detector signal is nullified by a constant current source of equal magnitude but opposite polarity to that of the detector. Any change in the sand surface results in a change of detector signal; this change is amplified and recorded on a center zero Brown strip chart recorder.

An excellent record of the sand surface elevation changes was recorded at 15 ft of water and later in the breaker zone. Maximum deviation in 15 ft of water was an erosion of 3-1/8 in. of sand during heavy seas prior to the plug injection tests. During the plug injection tests, erosion of 1/4 in. and fill of 3/8 in. were maximums recorded. During calm seas, a fill of 2-1/2 in. was recorded in the surf zone. Confirmation of the measurements was periodically made by divers.

3. Plug Injection Tests

Three plugs were injected. Two were in 15 ft of water and one in 20 ft of water. The injections were begun at 9:20 AM, October 1, 1971, and were completed at 10:20 AM. Sampling started on each plug at the completion of each injection. Fifty-three 1-in.-diam by 15-in.-long cores were taken and counted.

This sampling represents the most comprehensive gathering of plug data to date. Preliminary assessment of the collected data indicate that the actual sand surface may be as thick as 1 in., which is in line with the past measurements. The quantity of new data will allow utilization of the Hybrid computer in simulating the sand transport and helping to refine the transport model.

At the completion of the core sampling, a comprehensive areal survey of the three plugs was made using the RIST survey system. Data were taken at 1-sec intervals rather than at 2-sec intervals in an attempt to better define the transport patterns from the plugs. This 1-sec time interval represented a breakthrough on time, and the computer system proved invaluable in obtaining a comprehensive survey. The tow vehicle was actually directed from the real-time detector plot.

4. Line Source

A line source was injected on October 4, 1971, with the goals of watching the sand transport patterns around the experimental groin and of obtaining a transport vector in 15 ft of water for correlation with the plug data. Ocean conditions were such that at this time there was very little transport with a long shore current direction reversal away from the groin. The survey equipment was augmented with a new digital fathometer which was purchased by CERC. A new interface for the fathometer, provided by IDC, allowed integration of the fathometer into the RIST data collection and data processing systems.

RADIOISOTOPE SALES

An order was received from Teledyne Isotopes for ∿29,000 Ci of strontium-90 to be encapsulated into a heat source with the ∿19,000 Ci which they had in storage at ORNL. An order was received from Atomic Energy of Canada, Ltd. for a 15,500-Ci cesium-137 source. A request for quotation of 26,600 Ci of cesium-137 as 19 sources was received from Atomic Energy of Canada, Ltd. An order was received from Minnesota Mining and Manufacturing Company

for 1,000 Ci of cesium-137 as bulk powder. Orders were received from Radiochemical Centre, England, for 30,000 Ci of tritium and for 1,000 Ci of promethium-147.

Shipments made during the month include 1,000 Ci of promethium-147 to Radiochemical Centre, England, 6,000 Ci of tritium to New England Nuclear Corporation, 10,000 Ci of tritium to U. S. Radium Corporation, 100 Ci of krypton-85 to Sumitomo Shoji Kaisha Ltd., Japan, 1,000 Ci of cesium-137 to Minnesota Mining and Manufacturing Company, and 49,558 Ci of strontium-90 to Teledyne Isotopes, Inc.

The radioisotope sales proceeds and shipments for the first three months of FY 1971 and 1972 are given in Table 8.

Table 8. Radioisotope Sales and Shipments

Item	July thru September 1970	July thru September 1971
Inventory items	$ 79,585	$ 98,316
Major products	31,170	14,860
Radioisotope services	44,177	55,569
Cyclotron irradiations	27,376	45,088
Miscellaneous processed materials	11,665	21,891
Packing and shipping	20,735	19,124
Total	$214,708	$254,848
Number of shipments	794	688

ADMINISTRATIVE

Travel by IDC personnel and visitors to the IDC are given in Tables 9 and 10, respectively.

Table 9. Travel of IDC Personnel

Site Visited	Purpose of Visit
U. S. Atomic Energy Commission Washington, D. C.	Discuss radiation processing of effluents
Washington, D. C.	Attend ANSI Committee N-43 meeting
Miami Beach, Florida	Attend ANS annual meeting
Chicago, Illinois	Attend transplutonium element meeting

Table 10. IDC Visitors

Visitors (affiliation)	Subject Discussed
Owens-Illinois Container Corp.	Radiation processing of pulp effluent
Bendix Corporation	Tour Isotopes Development Center
General Electric Company	Isotopic power programs
University of Southern California Los Angeles, California	Pharmaceuticals
Consultant Los Angeles, California	Tracer techniques in mining and metallurgy
Japan Atomic Energy Research Institute, Japan	Observe operations at Fission Product Development Laboratory

PUBLICATIONS

J. R. DiStefano and R. E. McHenry, *Compatibility of Strontium Compounds with Superalloys at 900 and 1100°C*, ORNL-4625, Oak Ridge National Laboratory (November 1971)

E. Lamb, *Isotopic Power Fuels Monthly Status Report for September 1971*, ORNL-CF-71-10-34, Oak Ridge National Laboratory

A. F. Rupp, *Radioisotope Program (8000) Progress Report for September 1971*, ORNL-TM-3611, Oak Ridge National Laboratory

R. D. Seagren, *Oak Ridge National Laboratory Returnable Type B Gas Shipping Package*, ORNL-TM-3544, Oak Ridge National Laboratory (October 1971)

INTERNAL DISTRIBUTION

1. A. L. Allen
2. M. A. Baker
3. P. S. Baker
4. E. E. Beauchamp
5. G. E. Boyd
6-8. T. A. Butler
9. F. N. Case
10. W. R. Casto
11. J. A. Cox
12. F. L. Culler
13. W. C. Davis
14. J. S. Drury
15. J. H. Gillette
16. H. R. Gwinn
17. R. F. Hibbs
18. K. E. Jamison
19. Lynda Kern
20. E. H. Kobisk
21. E. Lamb
22. R. E. Leuze
23. J. L. Liverman
24. L. O. Love
25. W. S. Lyon
26. R. E. McHenry
27. W. W. Parkinson
28. J. J. Pinajian
29. M. E. Ramsey
30. S. A. Reynolds
31-32. R. A. Robinson
33. D. A. Ross
34. A. F. Rupp
35. R. W. Schaich
36. A. H. Snell
37. K. A. Spainhour
38. M. R. Skidmore
39-40. H. F. Stringfield
41. D. B. Trauger
42. A. M. Weinberg
43. J. C. White
44-45. Central Research Library
46. Document Reference Section
47-51. Laboratory Records Department
52. Laboratory Records - RC

EXTERNAL DISTRIBUTION

53. G. A. Andrews, ORAU, Medical Division, Oak Ridge, Tennessee
54. Hal Atkins, Brookhaven National Laboratory, Upton, New York
55. D. S. Ballantine, AEC, Washington, D. C.
56-59. R. F. Barker, AEC, Washington, D. C.
60. N. F. Barr, AEC, Washington, D. C.
61. O. M. Bizzell, AEC, Washington, D. C.
62. C. R. Buchanan, AEC, Washington, D. C.
63. R. L. Butenhoff, AEC, Washington, D. C.
64. T. D. Chikalla, PNL, Richland, Washington
65. D. F. Cope, AEC Site Representative, ORNL
66. J. C. Dempsey, AEC, Washington, D. C.
67. W. K. Eister, AEC, Washington, D. C.
68. E. E. Fowler, AEC, Washington, D. C.
69. J. D. Goldstein, AEC, Washington, D. C.
70. A. Gottschalk, Argonne Cancer Research Hospital, Chicago, Illinois
71. F. D. Haines, AEC, Washington, D. C.
72-74. J. E. Hansen, PNL, Richland, Washington
75. J. W. Irvine, MIT (Consultant)
76. J. Lawrence, Lawrence Radiation Laboratory, Berkeley, California
77. J. E. Machurek, AEC, Washington, D. C.
78. J. N. Maddox, AEC, Washington, D. C.
79. J. C. Malaro, AEC, Washington, D. C.
80. W. E. Mott, AEC, Washington, D. C.
81. J. A. Powers, AEC, Washington, D. C.

82. G. J. Rotariu, AEC, Washington, D. C.
83. B. A. Ryan, AEC, Richland, Washington
84. W. D. Sandberg, AEC, Aiken, South Carolina
85. S. J. Seiken, AEC, Washington, D. C.
86. R. W. Shivers, AEC, Washington, D. C.
87. F. J. Skozen (Krizek), Argonne Cancer Research Hospital, Chicago
88. P. E. Smith, ARHCO, Richland, Washington
89. L. G. Stang, Jr., BNL, New York
90-95. D. H. Turno, SRL, Aiken, South Carolina
96. A. R. Van Dyken, AEC, Washington, D. C.
97. Laboratory and University Division
98-99. Divison of Technical Information Extension