CENTRAL RESEARCH LIBRARY
DOCUMENT COLLECTION

OAK RIDGE NATIONAL LABORATORY
OPERATED BY
UNION CARBIDE CORPORATION
NUCLEAR DIVISION

POST OFFICE BOX X
OAK RIDGE, TENNESSEE 37830

ORNL-MIT-124

DATE: March 24, 1971 COPY NO. 23

SUBJECT: Evaluation of Porous Carbon and Ceramic Supports for Hyperfiltration

AUTHOR: J.B. Cabellon, A.K. Padia, and L.E. Whitesides, Jr.

Consultants: R.E. Minturn and J.S. Johnson, Jr.

ABSTRACT

Porous carbon and ceramic tubes were evaluated as supports for dynamically formed zirconium (IV) hydrous oxide-polycarboxylic acid hyperfiltration membranes. The most promising membranes were formed on Union Carbide 6-C carbon tubes using a 150,000 molecular weight polyacrylic acid. Sodium chloride rejections as high as 97% were obtained at water fluxes of 80 gpd/ft^2 compared with rejections of 90 to 95% and fluxes of 130 gpd/ft^2 using the porous stainless steel-Acropor/Millipore supports. The effects of pressure, circulation velocity, and temperature on membrane flux and sodium chloride and Coalinga water rejections were studied. A small industrial module containing 6-C carbon supports with a 3.04 ft^2 filtration surface gave a salt rejection of 86% and a product water flux of 60 gpd/ft^2.

OAK RIDGE NATIONAL LABORATORY
CENTRAL RESEARCH LIBRARY
DOCUMENT COLLECTION
LIBRARY LOAN COPY
DO NOT TRANSFER TO ANOTHER PERSON
If you wish someone else to see this document, send in name with document and the library will arrange a loan.
UCN-7969
13 3-67

[redacted]

Oak Ridge Station
School of Chemical Engineering Practice
Massachusetts Institute of Technology

[redacted]

Contents

		Page
1.	Summary	4
2.	Introduction	4
3.	Apparatus and Procedure	5
	3.1 Apparatus	5
	3.2 Studies Conducted with Ceramic Supports	7
	3.3 Studies Conducted with Carbon Supports	8
4.	Results and Discussion of Results	10
	4.1 Ceramic Supports	10
	4.1.1 Relative Performance of Supports	10
	4.1.2 Pressure and Velocity Excursions	10
	4.1.3 Effect of Time	15
	4.2 Carbon Supports	15
	4.2.1 Membrane Performances on Single Tubes at Various Temperatures, Pressure, and Circulation Velocities Using 0.05 M NaCl Solutions	15
	4.2.2 Tests with Coalinga Water at Various Temperatures	22
	4.2.3 Effect of Time on Membrane Performance	22
	4.2.4 Evaluation of the Carbon Module	22
	4.3 Comparison of Carbon and Ceramic Supports	26
5.	Conclusions	27
6.	Recommendations	27
7.	Acknowledgements	28
8.	Appendix	29
	8.1 Location of Original Data	29
	8.2 Procedure for Membrane Formation	29
	8.3 Sample Calculations	29
	8.4 Discussion of Errors	32
	8.5 Nomenclature	33
	8.6 Literature References	35

1. SUMMARY

Dynamically formed dual layer zirconium (IV) hydrous oxide-polycarboxylic acid membranes are being studied as a means of purifying brackish waste waters. When formed on porous stainless steel supports wrapped with Acropor or Millipore substrates, they have yielded sodium chloride rejections of 90 to 95% at water fluxes close to 130 gpd/ft^2. However, the high cost of these supports makes it desirable to evaluate the technical feasibility and economic merits of other cheaper support materials.

Porous ceramic and carbon supports were evaluated using zirconium (IV) hydrous oxide and different polycarboxylic acid additives. Sodium chloride rejections of 90 to 95% and water fluxes of 90 to 100 gpd/ft^2 were obtained using polyacrylic acid (PAA) of 150,000 molecular weight on 0.27 and 0.12 μ Selas ceramic supports. A 50,000 molecular weight PAA on 0.27 μ Selas support gave similar performances. Union Carbide 6-C carbon supports gave rejections as high as 97% with water fluxes of 80 gpd/ft^2 using 150,000 molecular weight PAA. A Ferro 202 ceramic tube (pore size between 1 and 10 μ) precoated with filteraid gave rejections of 67% and fluxes of 121 gpd/ft^2.

The effects of pressure, circulation velocity, and temperature on membrane fluxes and rejections were studied using 0.05 M sodium chloride solutions and Coalinga water. Fluxes increased with increased pressure, temperature, and circulation velocity. Rejections increased with increased pressure and circulation velocities, but were not significantly affected by changes in temperature.

A small industrial module with a 3.04 ft^2 filtration area containing seven Union Carbide 6-C carbon supports gave salt rejections of 86% at fluxes of 60 gpd/ft^2. The poorer performance of the module relative to the single carbon tube may be attributed to a non-optimum use of membrane additives for the larger surface area of the module, variations in the hydrodynamics of the two systems, and formation conditions.

The carbon supports are more promising than the ceramic supports because they are less brittle, can tolerate higher internal pressures, and operate at lower pressures and circulation velocities for comparable performances. Further study of the carbon supports should be undertaken to consider other flow configurations and to optimize the formation and operating conditions. A mass balance for the additives used in membrane formation would be helpful in scaleup to an industrial level. An economic balance between the lower cost of the carbon supports and the better performance of the stainless steel supports should be conducted.

2. INTRODUCTION

Hyperfiltration using dynamically formed membranes is a promising process for purifying brackish water. Recent work at Oak Ridge National

Laboratory has shown that dual layer zirconium (IV) hydrous oxide-polyacrylic acid membranes are capable of NaCl rejections of 90 to 95% with water fluxes of 130 to 150 gpd/ft^2 (7, 8). These dual layer membranes have been formed on porous stainless steel fingers wrapped with Millipore or Acropor substrates. A sodium chloride solution containing the membrane material is circulated axially over the finger at pressures up to 1000 psi. The membrane is deposited on the support as the product solution flows radially through the finger. Since porous stainless steel is expensive and the labor costs involved in wrapping the Millipore or Acropor substrate are expected to be high, less expensive support materials must be considered.

The overall purpose of this project was to assess the feasibility of using other support materials for dynamic membranes. Three types of supports were considered:

1) Ceramic tubes with nominal pore sizes ranging from 0.12 to 0.8 μ.

2) Ceramic tubes with nominal pore sizes between 1 and 10 μ using a filteraid.

3) Carbon tubes with a median pore size of 0.12 μ.

Each of these supports is expected to be an order of magnitude cheaper than the present membrane support. The specific objective was to evaluate the performance of membranes formed on each of these supports under a variety of operating conditions, e.g., pressure, temperature, and circulation velocity. A module containing seven carbon tubes was studied to determine how performance on a larger scale differs from that of a single, relatively short tube.

3. APPARATUS AND PROCEDURE

3.1 Apparatus

A schematic diagram of the apparatus is shown in Fig. 1. Two hyperfiltration loops were used: Loop VII contained the ceramic and stainless steel supports, and Loop VIII contained the carbon supports. The basic components of both loops were essentially the same. Feed solution was supplied to the system at elevated pressures by a set of Milton-Roy Triplex diaphragm pumps. Within the high pressure loop the feed solution was circulated over the test sections at a controlled rate. Each test section consisted of a tubular support finger mounted on the inside of a jacket. The feed solution flowed axially through the annulus formed by the support and the jacket. The product liquid flowed radially through the support, axially along the inside of the support, and out of the circulation loop through a special fixture. The feed solution temperature was maintained constant with a double tube heat exchanger and the system pressure was maintained with a letdown pressure valve. Product solution was returned to the feed reservoir at atmospheric pressure so that feed concentration

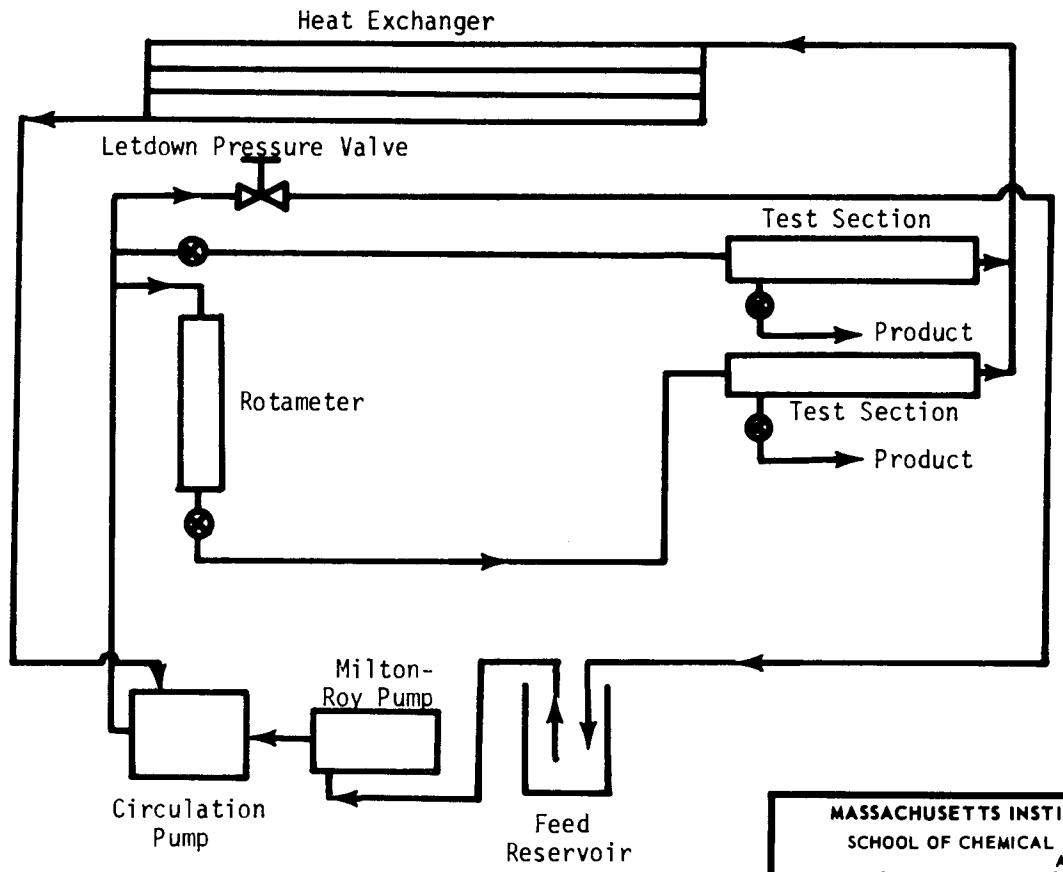

MASSACHUSETTS INSTITUTE OF TECHNOLOGY
SCHOOL OF CHEMICAL ENGINEERING PRACTICE
AT
OAK RIDGE NATIONAL LABORATORY

SCHEMATIC DIAGRAM OF APPARATUS

DATE	DRAWN BY	FILE NO.	FIG.
3-23-71	AKP	CEPS-X-124	1

would not vary with time. Both loops were constructed primarily of Hastalloy C, titanium, and high pressure rubber tubing to minimize introduction of corrosion products. The test sections of Loop VII were made of Lucite while those of Loop VIII were made of titanium.

Observed salt rejections were monitored by taking resistivity measurements of the feed and product solutions using a model RC-18 conductivity bridge. Rejections were sometimes checked by chloride analysis using a Buchler-Cotlove chloridometer. The product water flux was measured either with a calibrated precision bore rotameter (range 0 to 50 cc/min) or by collecting the product water in a graduated cylinder for a known period of time.

3.2 Studies Conducted with Ceramic Supports

Three ceramic supports, shown in Table 1, with the four polycarboxylic acids, shown in Table 2, were employed to identify the combination of ceramic support and additive yielding the best performance of flux and rejection.

Table 1. Ceramic Supports Used

Supplier	Nominal Pore Size (micron)	Support Outer Diameter (in.)
Selas	0.12	0.223
Selas	0.27	0.223
Selas	0.8	0.216

Table 2. Polycarboxylic Acids Used

Supplier	Trade Name	Type	Nominal Molecular Weight
Rohm and Haas	Acrysol A-1	polyacrylic	50,000
Rohm and Haas	Acrysol A-3	polyacrylic	150,000
Rohm and Haas	Acrysol A-5	polyacrylic	300,000
Rohm and Haas	Tamol 850	polymethacrylic	5,000

Dual layer zirconium (IV) hydrous oxide-polycarboxylic acid membranes were formed on each support by the standard procedure described in Appendix 8.2. The system was then operated with a feed solution of 0.05 M NaCl and 1 ppm polycarboxylic acid under the conditions shown in Table 4 (see Sect. 4.1.1). Flux and resistivity measurements were taken and rejections were computed using the method described in Appendix 8.3.1. Circulation velocity excursions were made on the most promising membranes, covering a range from 10 to 40 ft/sec. In the case of two promising membranes, performance was also measured for operating pressures varying from 500 to 950 psi.

A membrane was formed in the same way on a Ferro 202 ceramic tube (OD = 0.62 in.) which was pretreated first with 25 ppm of Johns Manville Hyflo Super-Cel filteraid and then with 25 ppm of Johns Manville Celite 505 filteraid. With the filteraid a better membrane was formed due to a reduction in the effective surface-pore size of the ceramic before treatment. Acrysol A-3 was used as the additive. Performance was observed at the conditions shown in Table 4 (Sect. 4.1.1).

3.3 Studies Conducted with Carbon Supports

The 6-C carbon tubes supplied by Union Carbide were examined: as received and after machining 0.02 in. from the outer surface. The median pore size for these tubes was 0.12 μ and the average was 0.67 μ. After forming dual layer membranes on these supports using zirconium hydrous oxide and Acrysol A-3, the performance was observed at circulation velocities between 3.38 and 10.9 ft/sec, pressures between 300 and 900 psi, and temperatures ranging from 30 to 71°C using a 0.05 M NaCl solution with 1 ppm of A-3. Membrane performance using Coalinga water (see Table 3) as the feed solution was compared with performance using a 0.05 M sodium chloride at various temperatures.

Table 3. Composition of Coalinga Water

Na_2SO_4	0.0096 M
$CaCl_2$	0.0018 M
$MgCl_2$	0.0020 M
$NaHCO_3$	0.0028 M

A small industrial module containing seven as-received, carbon tubes (see Fig. 2), each 128-cm long with a total surface area of 3.04 ft^2 was also investigated. The membrane was formed at a circulation velocity of 13.7 ft/sec and a pressure of 900 psi. Membrane fluxes and rejections were observed at various temperatures, and the results compared to those of a single carbon tube.

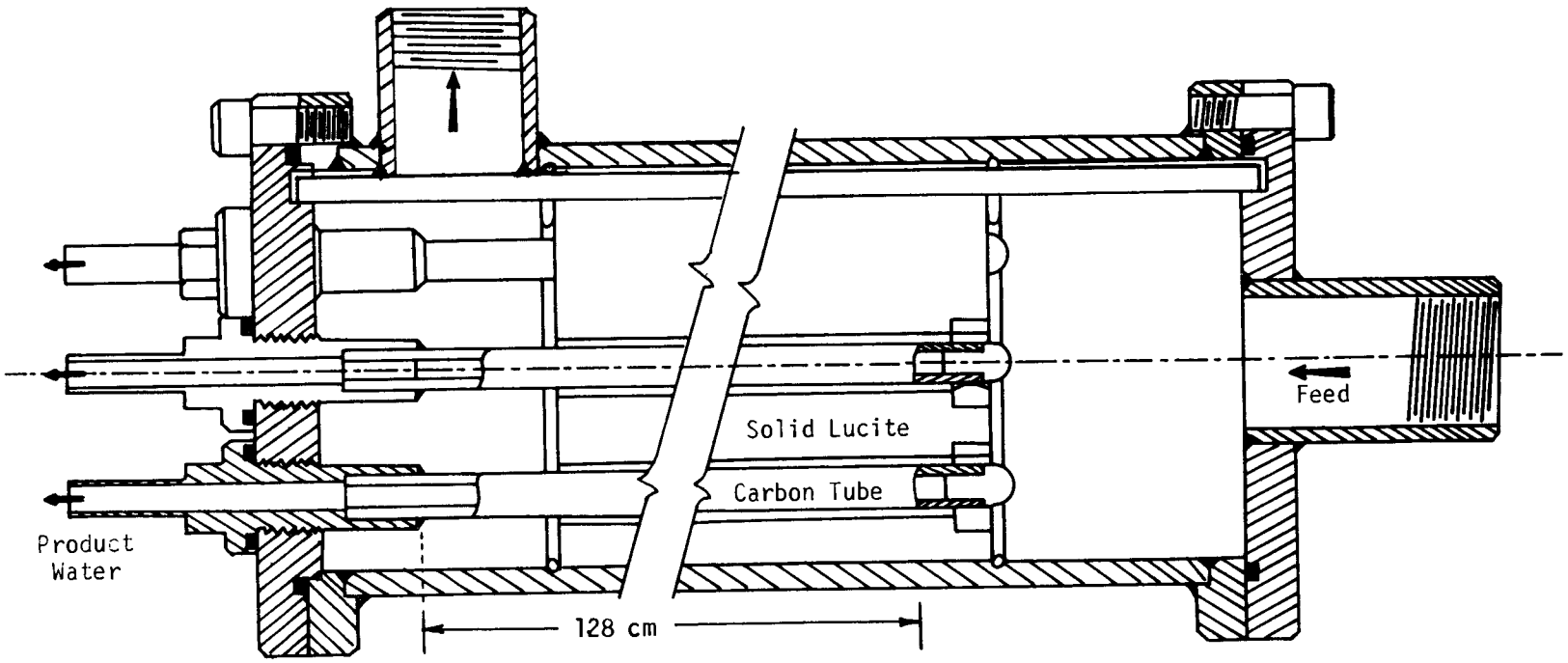

Total filtration area = 3.04 ft^2

MASSACHUSETTS INSTITUTE OF TECHNOLOGY
SCHOOL OF CHEMICAL ENGINEERING PRACTICE
AT
OAK RIDGE NATIONAL LABORATORY

Half-Sectional Elevation of the Carbon Module

DATE	DRAWN BY	FILE NO.	FIG.
3-23-71	AKP	CEPS-X-124	2

4. RESULTS AND DISCUSSION

4.1 Ceramic Supports

4.1.1 Relative Performance of Supports

Table 4 compares the performance of various dual layer membranes formed on ceramic supports (with and without filteraid) with those on the stainless steel-Millipore/Acropor supports. The formation (described in Sect. 8.2) and operating conditions of the membranes were the same in all cases.

The values obtained for the 0.22 μ Millipore and 0.45 μ Acropor supports as shown in Table 4 are representative of the best combination of rejection and flux obtained using the Zr (IV)-PAA membrane. Although none of the ceramic supports performed as well, in some cases the ceramics gave encouraging results. The 0.27 μ Selas support performed well with A-1 and A-3 as did the 0.12 μ Selas support with A-3. In the other cases shown, either the flux or the rejection was too low to indicate promise.

No results are shown for 0.8 μ Selas tubes. They were found to be very fragile and broke either as they were installed or during loop pressurization at startup. It was concluded that such supports would not be feasible in a commercial unit. The other Selas tubes, although less fragile, were broken occasionally during installation. No breakage occurred with the Ferro ceramic tubes.

4.1.2 Pressure and Velocity Excursions

Figure 3 shows rejection and flux as a function of pressure for the 0.27 and 0.12 μ Selas tubes using Acrysol A-3. The points labeled "i" and "f" represent membrane performance before and after the excursion, respectively. From this figure it is also clear that the larger pore size (0.27 μ) ceramic support gave higher rejections and fluxes.

The fluxes appear to increase linearly as the pressure drop driving force was increased from 500 to 950 psi. This trend is consistent with the diffusion model of hyperfiltration (3) in which the solvent flux J is given as:

$$J = B(\Delta P - \Delta\pi) \qquad (1)$$

This linear relationship implies a constant membrane permeability. The observed dependence of NaCl rejection on pressure is consistent with previous experimental trends with similar systems (3). It is expected that the rejection will increase with flux, eventually approaching an asymptotic value equal to 1.0 minus the distribution coefficient of the

Table 4. Comparison of Ceramic Support Performances

Type of Acid Layer \ Support		0.22 μ Millipore on Stainless Steel		0.45 μ Acropor on Stainless Steel		0.12 μ Selas Ceramic		0.27 μ Selas Ceramic		Ferro Ceramic with Filteraid	
		Rejection (%)	Flux ($\frac{gpd}{ft^2}$)	Rejection (%)	Flux ($\frac{gpd}{ft^2}$)	Rejection (%)	Flux ($\frac{gpd}{ft^2}$)	Rejection (%)	Flux ($\frac{gpd}{ft^2}$)	Rejection (%)	Flux ($\frac{gpd}{ft^2}$)
A-1	Before Excursion	-	-	-	-	30.5	224	94.3	80	-	-
	After Excursion	-	-	-	-	38.1	220	92.9	94	-	-
A-3	Before Excursion	93.6	135	94.2	135	93.4	66	92.9	77	67.3	121
	After Excursion	-	-	-	-	90.3	91	92.0	102	-	-
A-5	Before Excursion	-	-	-	-	91.2	38	87.9	30	-	-
	After Excursion	-	-	-	-	-	-	-	-	-	-
Tamol 850	Before Excursion	-	-	-	-	70.9	256	67.3	268	-	-
	After Excursion	-	-	-	-	-	-	-	-	-	-

Operating Conditions: $\bar{u}$ = 35 ft/sec T = 25°C
P = 950 psig NaCl = 0.05 M
pH = 7.0

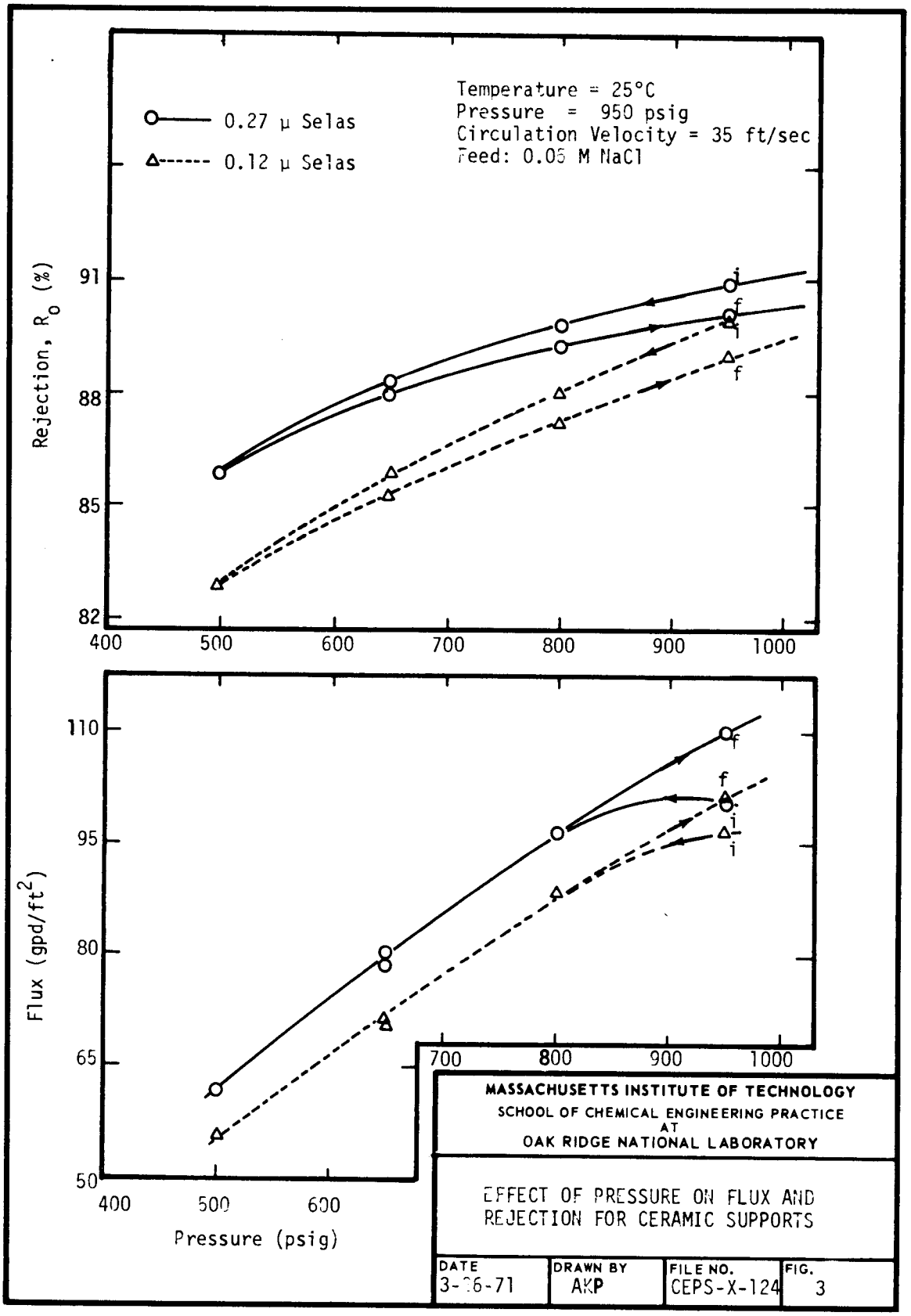
0.27 μ Selas
0.12 μ Selas
Temperature = 25°C
Pressure = 950 psig
Circulation Velocity = 35 ft/sec
Feed: 0.05 M NaCl
Rejection, R_o (%)
91
88
85
82
400
500
600
700
800
900
1000
Flux (gpd/ft^2)
110
95
80
65
50
400
500
600
700
800
900
1000
Pressure (psig)
MASSACHUSETTS INSTITUTE OF TECHNOLOGY
SCHOOL OF CHEMICAL ENGINEERING PRACTICE
AT
OAK RIDGE NATIONAL LABORATORY
EFFECT OF PRESSURE ON FLUX AND
REJECTION FOR CERAMIC SUPPORTS
DATE
3-26-71
DRAWN BY
AKP
FILE NO.
CEPS-X-124
FIG.
3

salt in the membrane relative to that in the feed (D*). This trend was observed, although the limitations of the apparatus did not allow a verification of the asymptotic rejection.

It is clear from Fig. 3 that although the initial and final measurements were taken at the same pressure, the flux was higher and the rejection was lower after the pressure excursion was completed. Reducing the pressure across the membrane may have altered the microscopic or macroscopic structure of the membrane slightly. These trends could be attributed to certain membrane compaction effects, though theoretically the rejections should be independent of membrane thickness.

Figure 4 shows the effect of circulation velocity on concentration polarization and rejection for 0.27 and 0.12 μ Selas tubes on membrane flux using Acrysol A-3. The choice of axes is based on the Sherwood et al. (6) equation modified for annular flow by Heman and Bronfenbrenner (2).

$$\ell n\left(\frac{1 - R_o}{R_o}\right) = K\left[\left(\frac{d_2 - d_1}{\nu}\right)^{1/4}\left(\frac{\nu}{\mathcal{D}}\right)^{2/3}\right] \frac{V_o}{\bar{u}^{0.75}} + \ell n\left(\frac{1 - R_i}{R_i}\right) \qquad (2)$$

As predicted from this equation, the observed rejections shown in Fig. 4 increase [$\ell n(\frac{1-R_o}{R_o})$ decreases] as circulation velocity is increased ($\frac{V_o}{\bar{u}^{0.75}}$ decreases), because concentration polarization in the boundary layer next to the membrane is reduced. From an extrapolation of the lines in Fig. 4 to infinite flow velocity ($\frac{V_o}{\bar{u}^{0.75}} = 0$), the intrinsic membrane rejection is given by the intercept. Intrinsic rejections of 93.0 and 94.0% for the 0.12 and 0.27 μ Selas supports respectively were obtained. These values are visually indistinguishable within the expected experimental error, ± 2.5% (see Sect. 8.4).

The slope of each line in Fig. 4 may be used (see Appendix 8.3.3) to compute the Colburn parameter, K. The experimental and theoretical values of the Colburn parameter are compared in Table 5 (see Appendix 8.3.3 for calculations).

Table 5. Computed and Experimental Values for the Colburn Parameter - Ceramic Supports and Acrysol A-3

Support	Experimental Value for the Colburn Parameter	Computed Value for the Colburn Parameter
0.12 μ Selas	44.5	13.7
0.27 μ Selas	37.3	13.7

Operating Conditions:
T = 25°C
P = 950 psig
pH = 7 ± 0.1
Additive = Acrysol A-3

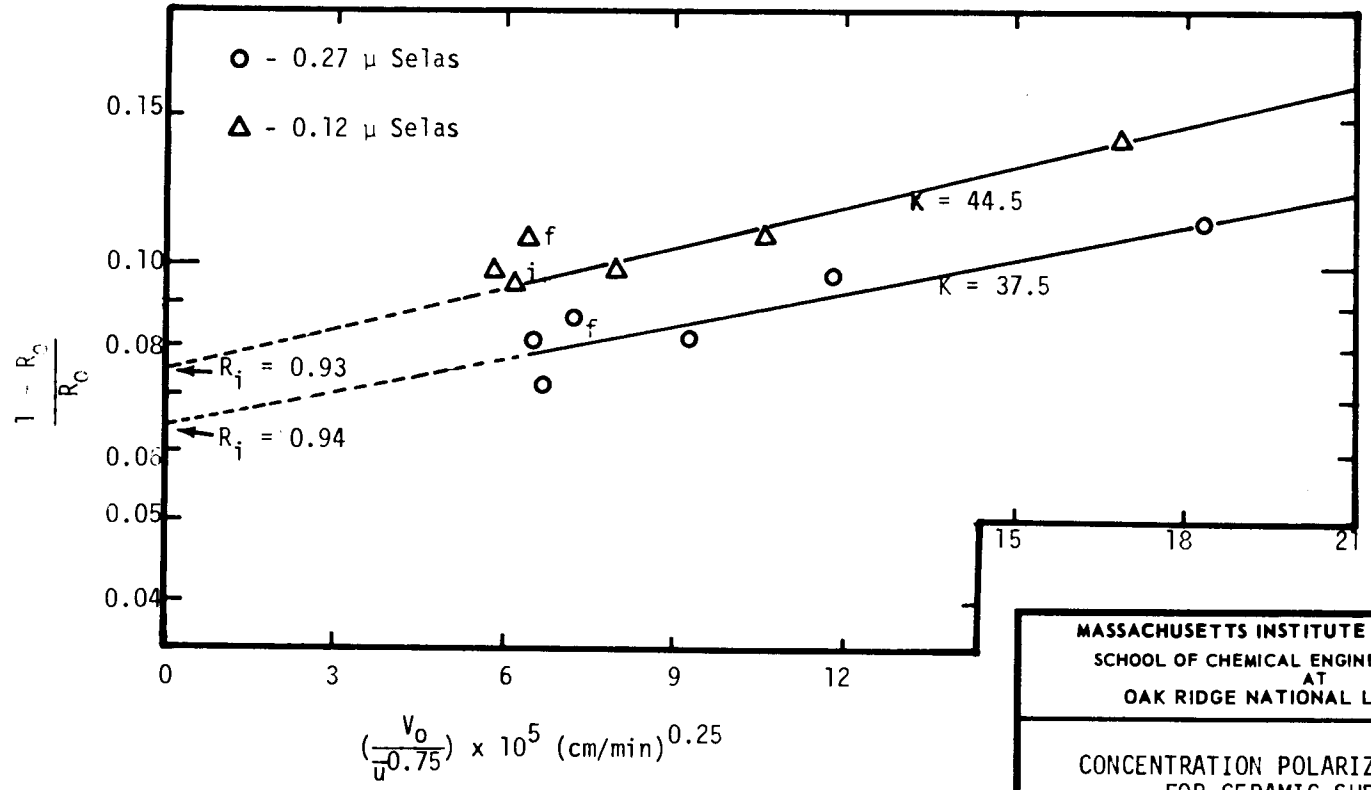

MASSACHUSETTS INSTITUTE OF TECHNOLOGY
SCHOOL OF CHEMICAL ENGINEERING PRACTICE
AT
OAK RIDGE NATIONAL LABORATORY

CONCENTRATION POLARIZATION EFFECT
FOR CERAMIC SUPPORTS

DATE	DRAWN BY	FILE NO.	FIG.
3-26-71	AKP	CEPS-X-124	4

Figure 5 is similar to Fig. 4 except that Acrysol A-1 was the additive. The low sodium chloride rejections evident with 0.12 μ Selas supports (~35%) indicate that the membrane did not form properly. No intrinsic rejections or Colburn parameters are computed from these data. Extrapolating the 0.27 μ line yields an intrinsic rejection of 95.2% approximately the same intrinsic rejection obtained using Acrysol A-3. The Colburn parameter found from the slope of the line is 59.6 which differs considerably from the value of 13.7 computed from theoretical considerations.

The considerable difference between the experimental and computed values of the Colburn parameter may be due to the following factors:

1) The observed rejection changed less than 5% over the entire velocity range studied. This change was only slightly larger than a maximum expected error of ± 2.5% in the rejection; therefore the slope or Colburn parameter could deviate up to 100%.

2) The value of the diffusion coefficient ($\mathcal{D}$) was assumed to be 1.5×10^{-5} cm^2/sec.

3) It is possible that variations in membrane performance with circulation velocity may not have been caused entirely by changes in the concentration polarization. Variations in the circulation velocity may have caused temporary or permanent physical changes in the membrane itself. Indeed, some change in membrane performance between the initial and final measurements (taken at the same conditions) may be seen in Fig. 4.

4) In deriving Eq. (1), the Colburn parameter was assumed to be independent of flux. The mass transfer enhancement due to the "suction" effect on the boundary layer at high fluxes does not justify the assumption.

4.1.3 Effect of Time

Figure 6 shows the variations in flux and rejection with time for the 0.27 and 0.12 μ Selas ceramic tubes. This figure is also indicative of the membrane response to changes in various operating conditions. These results are of particular interest in evaluating the long term behavior of membranes. Fluxes seem to increase at the expense of rejection as time progresses. The reasons for this anomalous behavior are unknown at the present time.

4.2 Carbon Supports

4.2.1 Membrane Performance on Single Tubes at Various Temperatures, Pressures, and Circulation Velocities Using 0.05 M NaCl Solutions

Figure 7 shows the effect of temperature on water flux and sodium chloride rejection for the two types of carbon supports described in Sect. 3.3. The machined carbon supports gave higher rejections and approximately the same fluxes as the supports before machining (as received). Over the

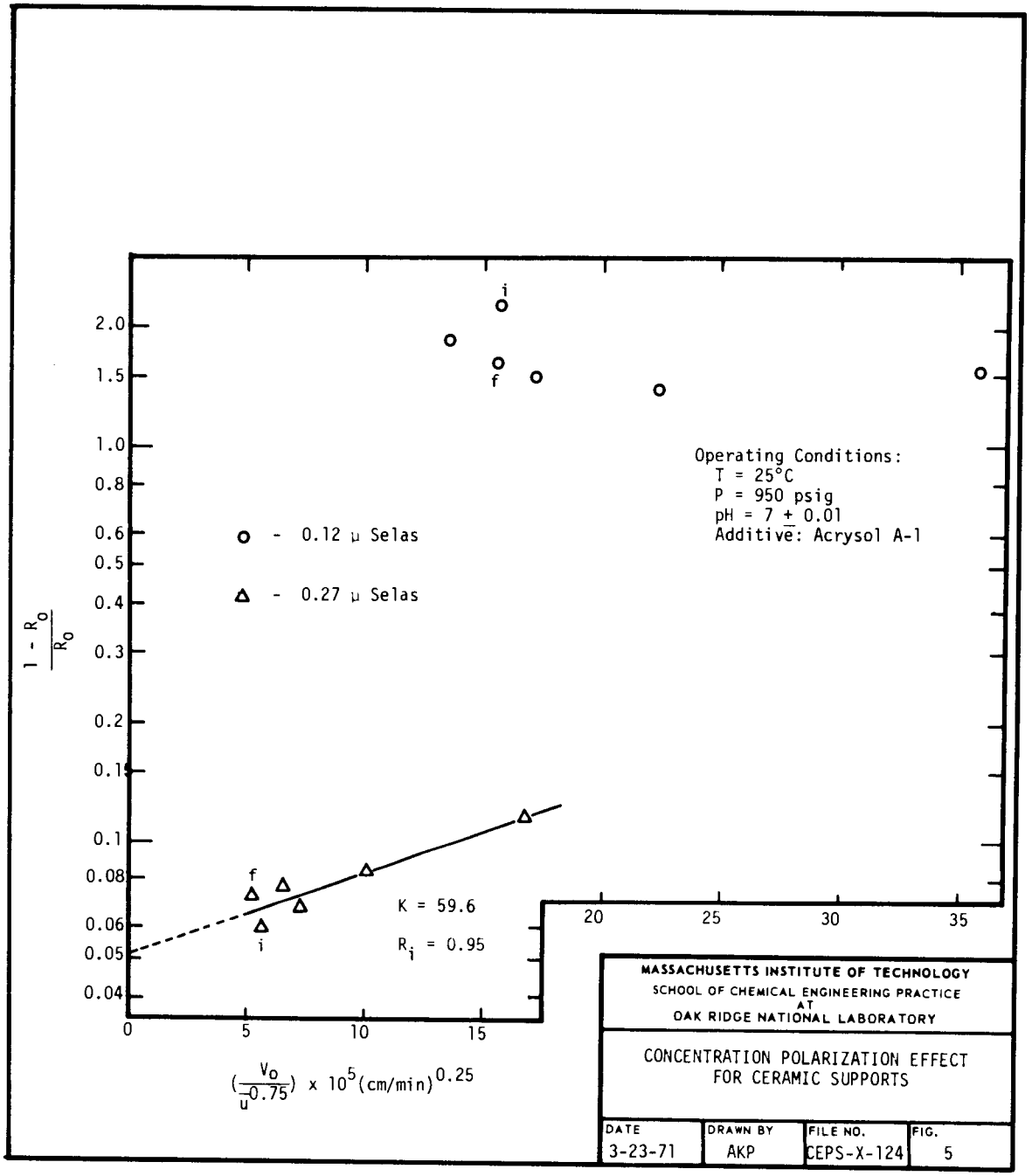
2.0
1.5
1.0
0.8
0.6
0.5
0.4
0.3
0.2
0.1
0.08
0.06
0.05
0.04
$\frac{1 - R_o}{R_o}$
i
f
o - 0.12 μ Selas
Δ - 0.27 μ Selas
Operating Conditions:
T = 25°C
P = 950 psig
pH = 7 ± 0.01
Additive: Acrysol A-1
K = 59.6
R_i = 0.95
0
5
10
15
20
25
30
35
$(\frac{V_o}{u^{0.75}}) \times 10^5 (cm/min)^{0.25}$
MASSACHUSETTS INSTITUTE OF TECHNOLOGY
SCHOOL OF CHEMICAL ENGINEERING PRACTICE
AT
OAK RIDGE NATIONAL LABORATORY
CONCENTRATION POLARIZATION EFFECT
FOR CERAMIC SUPPORTS
DATE
3-23-71
DRAWN BY
AKP
FILE NO.
CEPS-X-124
FIG.
5

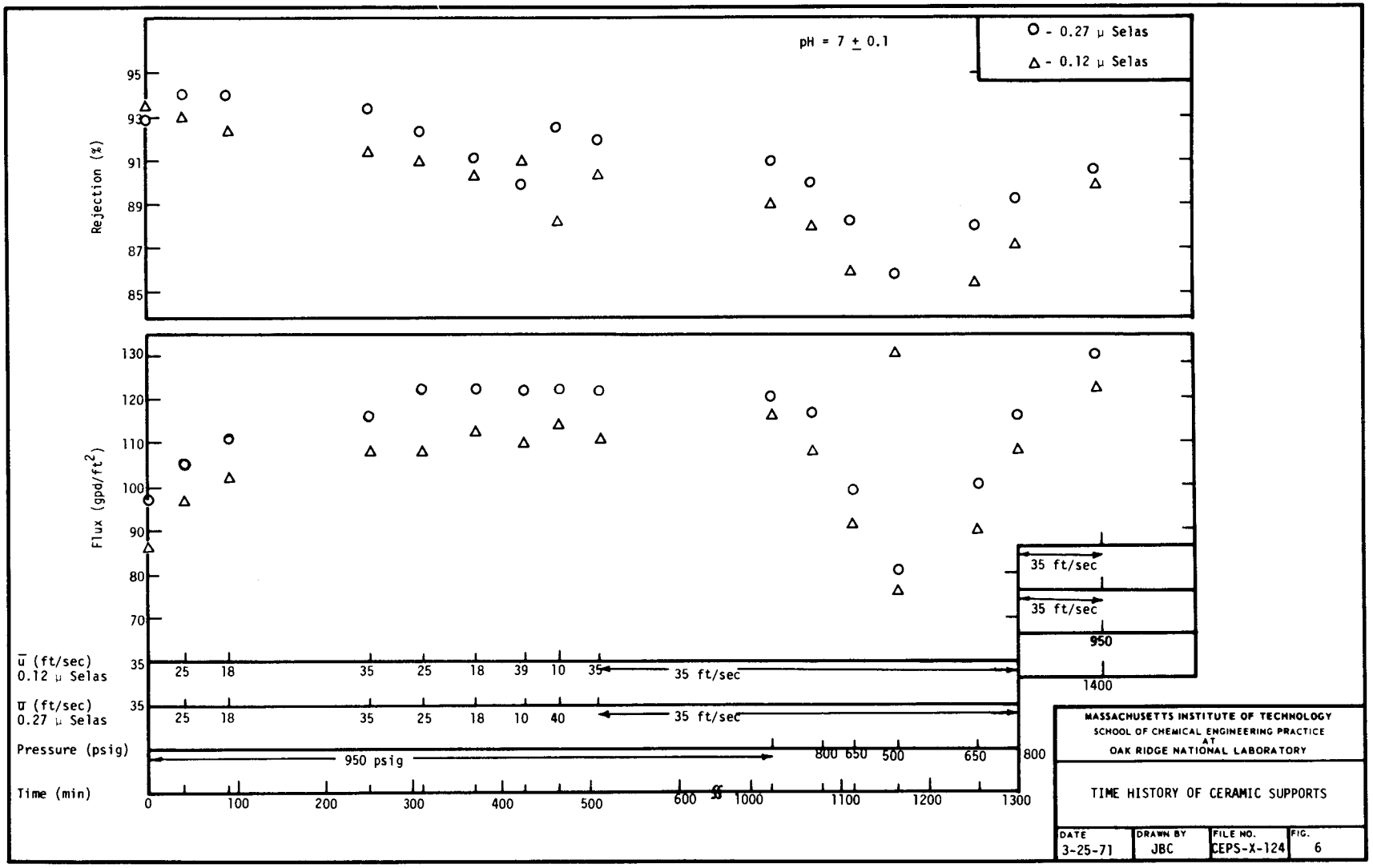
pH = 7 ± 0.1
O - 0.27 μ Selas
Δ - 0.12 μ Selas
Rejection (%)
95
93
91
89
87
85
Flux (gpd/ft²)
130
120
110
100
90
80
70
35 ft/sec
35 ft/sec
950
1400
ū (ft/sec) 0.12 μ Selas
35 25 18 35 25 18 39 10 35
35 ft/sec
ū (ft/sec) 0.27 μ Selas
35 25 18 35 25 18 10 40
35 ft/sec
Pressure (psig)
950 psig
800 650 500 650 800
Time (min)
0 100 200 300 400 500 600 1000 1100 1200 1300
MASSACHUSETTS INSTITUTE OF TECHNOLOGY
SCHOOL OF CHEMICAL ENGINEERING PRACTICE
AT
OAK RIDGE NATIONAL LABORATORY
TIME HISTORY OF CERAMIC SUPPORTS
DATE 3-25-71
DRAWN BY JBC
FILE NO. CEPS-X-124
FIG. 6

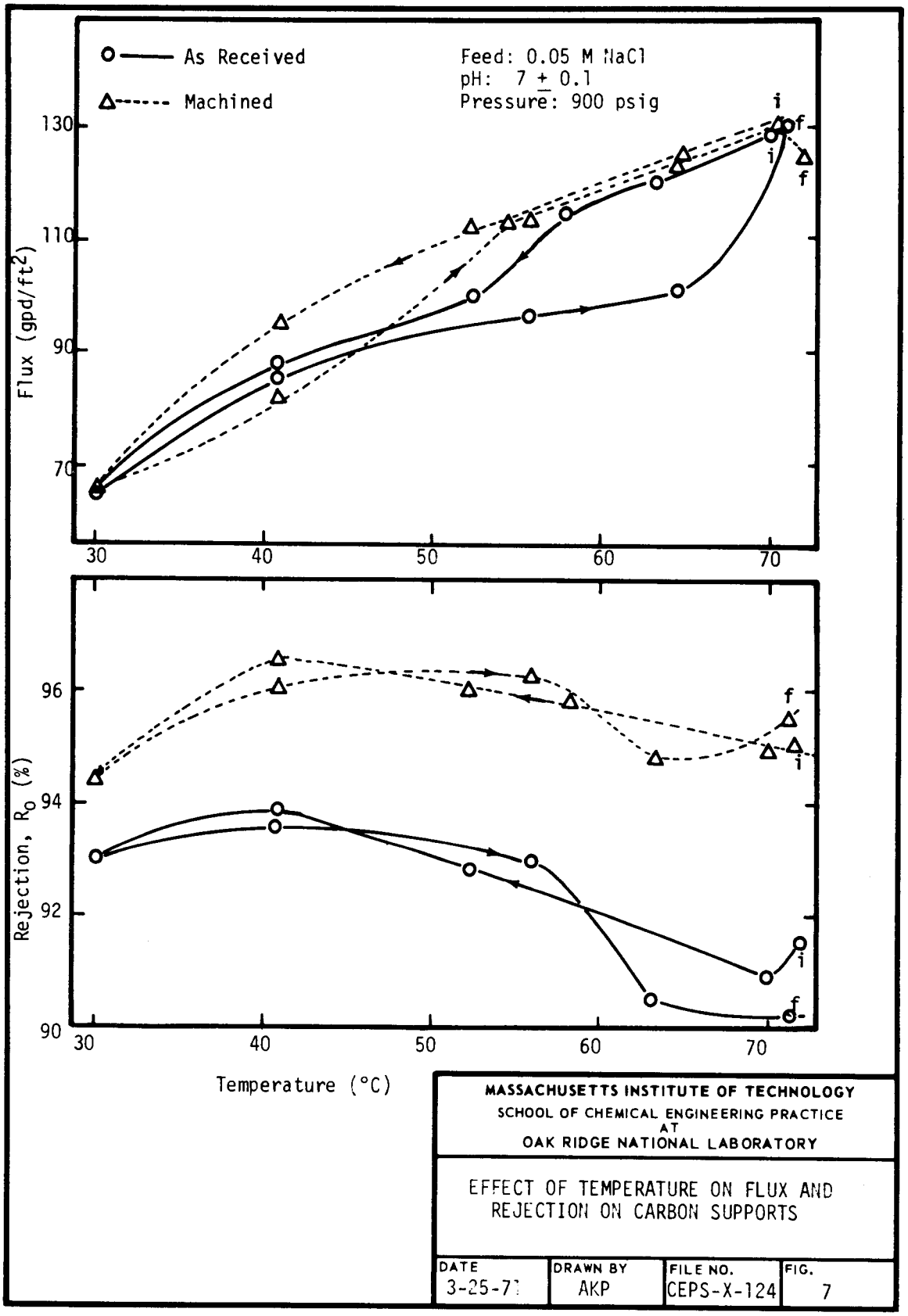

MASSACHUSETTS INSTITUTE OF TECHNOLOGY
SCHOOL OF CHEMICAL ENGINEERING PRACTICE
AT
OAK RIDGE NATIONAL LABORATORY

EFFECT OF TEMPERATURE ON FLUX AND REJECTION ON CARBON SUPPORTS

DATE	DRAWN BY	FILE NO.	FIG.
3-25-7[illegible]	AKP	CEPS-X-124	7

temperature range investigated (30 to 71°C) the water flux increased approximately in inverse proportion to the viscosity of water for both machined and as received 6-C carbon tubes. This can be explained on the basis of the Kozeny equation (1):

$$V_o = [(\frac{1}{Z}) \frac{\varepsilon^3}{S^2(1-\varepsilon)^2} \frac{1}{\ell}] \frac{\Delta P}{\mu} \qquad (3)$$

The assumption made here is that the properties and thickness of the membrane do not change with change in temperature. As temperature is increased from 30 to 70°C, the viscosity of water decreased from 0.8 to 0.4 cp (5) and, as observed, the flux increased from about 65 to 130 gpd/ft^2. Membrane rejections on the other hand do not appear to be significantly changed as the temperature was varied from 30 to 71°C.

The improved overall performance of these membranes at elevated temperatures makes them potentially favorable for the purification of many industrial waste waters which are often sewered at these temperatures (∿50 - 70°C). Acidic waste liquors generated from dyeing of textiles and fibers and pulp mill waste (4) are two typical examples.

The effect of pressure on water flux and sodium chloride rejection using two types of carbon supports is shown in Fig. 8. Measurements were taken from high pressures to low pressures and then back to high pressures. As observed with ceramic supports, decreased pressure results in decreased fluxes and rejections. However, even at the lowest pressure considered (300 psig), high rejections (∿90%) were still obtained at 60°C. Slightly higher rejections were obtained with machined tubes at pressures above 600 psig, although little difference in flux is seen between the two supports. A peculiar hysteresis effect is observed in Fig. 8 indicating that some physical change may have occurred in the membranes as the pressure was varied.

Membrane performance is related to circulation velocity for the two types of carbon supports in Fig. 9. The machined tube yielded an intrinsic rejection of 96.1% which is slightly higher than an intrinsic rejection of 93.5% found for the carbon support as received. The values of the Colburn parameter from the slopes of the lines are compared in Table 6 with the theoretically calculated values (see Appendix 8.3.3).

Table 6. Computed and Experimental Values for the Colburn Parameter - Carbon Supports and A-3

Support	Experimental Value for the Colburn Parameter	Computed Value for the Colburn Parameter
Machined carbon tube	10.5	15.48
As received carbon tube	17.1	14.72

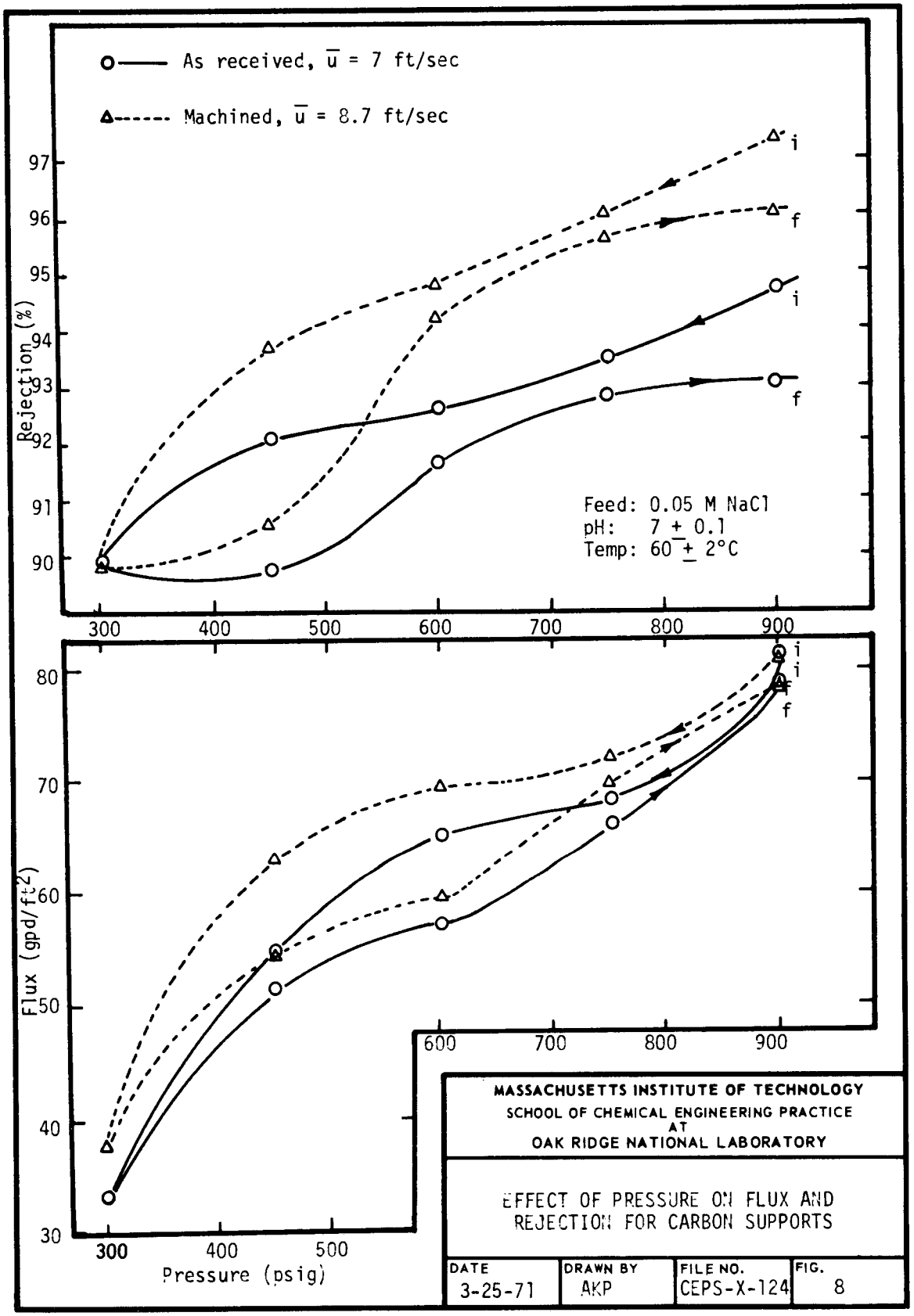
As received, $\bar{u}$ = 7 ft/sec
Machined, $\bar{u}$ = 8.7 ft/sec
Rejection (%)
97
96
95
94
93
92
91
90
i
f
i
f
Feed: 0.05 M NaCl
pH: 7 ± 0.1
Temp: 60 ± 2°C
300
400
500
600
700
800
900
Flux (gpd/ft²)
80
70
60
50
40
30
i
i
f
f
600
700
800
900
300
400
500
Pressure (psig)
MASSACHUSETTS INSTITUTE OF TECHNOLOGY
SCHOOL OF CHEMICAL ENGINEERING PRACTICE
AT
OAK RIDGE NATIONAL LABORATORY
EFFECT OF PRESSURE ON FLUX AND REJECTION FOR CARBON SUPPORTS
DATE
3-25-71
DRAWN BY
AKP
FILE NO.
CEPS-X-124
FIG.
8

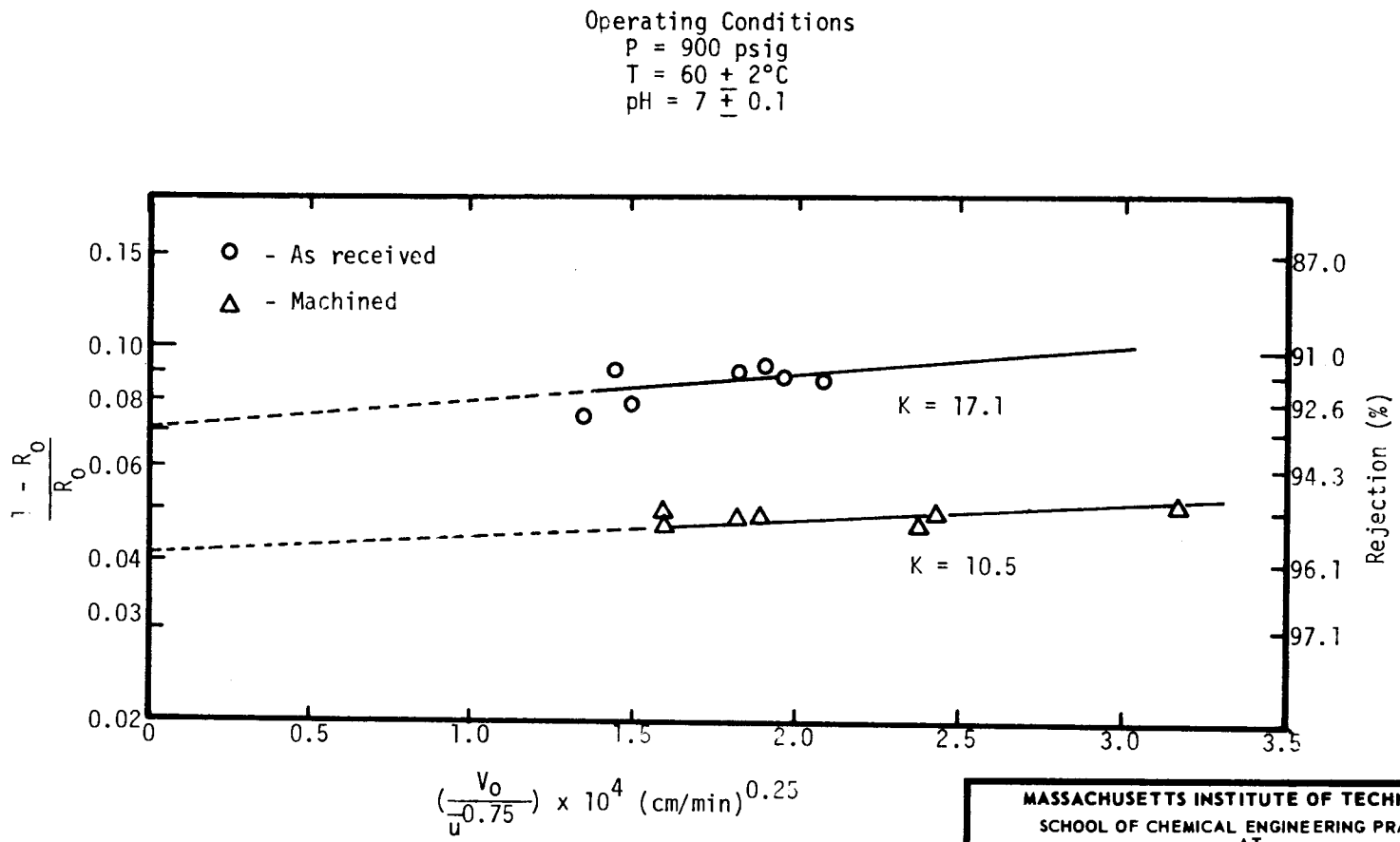

MASSACHUSETTS INSTITUTE OF TECHNOLOGY
SCHOOL OF CHEMICAL ENGINEERING PRACTICE
AT
OAK RIDGE NATIONAL LABORATORY

CONCENTRATION POLARIZATION EFFECT
FOR CARBON SUPPORTS

DATE	DRAWN BY	FILE NO.	FIG.
3-25-71	JBC	CEPS-X-124	9

The differences between computed and experimental values are within the experimental uncertainty involved in measuring rejections and drawing the best straight line through the points. It is to be noted that R_{obs} varied only about 3% (maximum) over the entire velocity range.

4.2.2 Tests with Coalinga Water at Various Temperatures

The performance of the two carbon supports is compared in Fig. 10 for two feed stocks: 0.05 M NaCl and Coalinga water. As with the sodium chloride solution, the machined tubes gave better rejections and approximately the same fluxes as the as received tubes over the temperature range considered for Coalinga water. Increased temperature gave increased fluxes for the Coalinga water and the rejection appeared to reach a maximum at 55 to 60°C (2 to 3% variations).

Higher fluxes were observed with NaCl solution than Coalinga water, while the relative magnitude of the rejections varied over the temperature range. Because the feed solutions are so dissimilar, it is difficult to postulate a physical mechanism to explain the results.

4.2.3 Effect of Time on Membrane Performance

Figure 11 shows the complete time history of the membrane with machined and as received carbon supports. Membrane performance with changes in pressure, circulation velocity, and type of feed are also indicated for comparison. Although the run lasted only about 45 hr, no marked membrane degeneration was observed. This is particularly encouraging since any economic process would require satisfactory membrane performance over extended operating times.

4.2.4 Evaluation of the Carbon Module

A comparison of the fluxes and rejections obtained with a small industrial module containing as received carbon tubes and a single carbon tube at various temperatures is presented in Fig. 12. The hysteresis effect shown for the single tube in Fig. 6 has been neglected for comparison, and a best line is drawn through the data points. As can be observed, the module yielded lower rejections and fluxes. These reduced values may be attributed to the following:

1) Previous studies on dynamically formed membranes (8) have shown that a sublayer with a low flux results in a low flux dual layer membrane; however, a poor rejecting sublayer does not necessarily result in a poor rejecting dual layer. The low fluxes of the module experiment can be attributed to a poor Zr (IV) hydrous oxide sublayer prior to PAA addition, e.g., module flux before dual layer formation was 60 gpd/ft^2 lower than the flux of the single tube experiment. The formation of a poor sublayer may be due to the higher Zr (IV) hydrous oxide concentration in the feed for the module, 7×10^{-4} compared to 1×10^{-4} M in the single tube experiment.

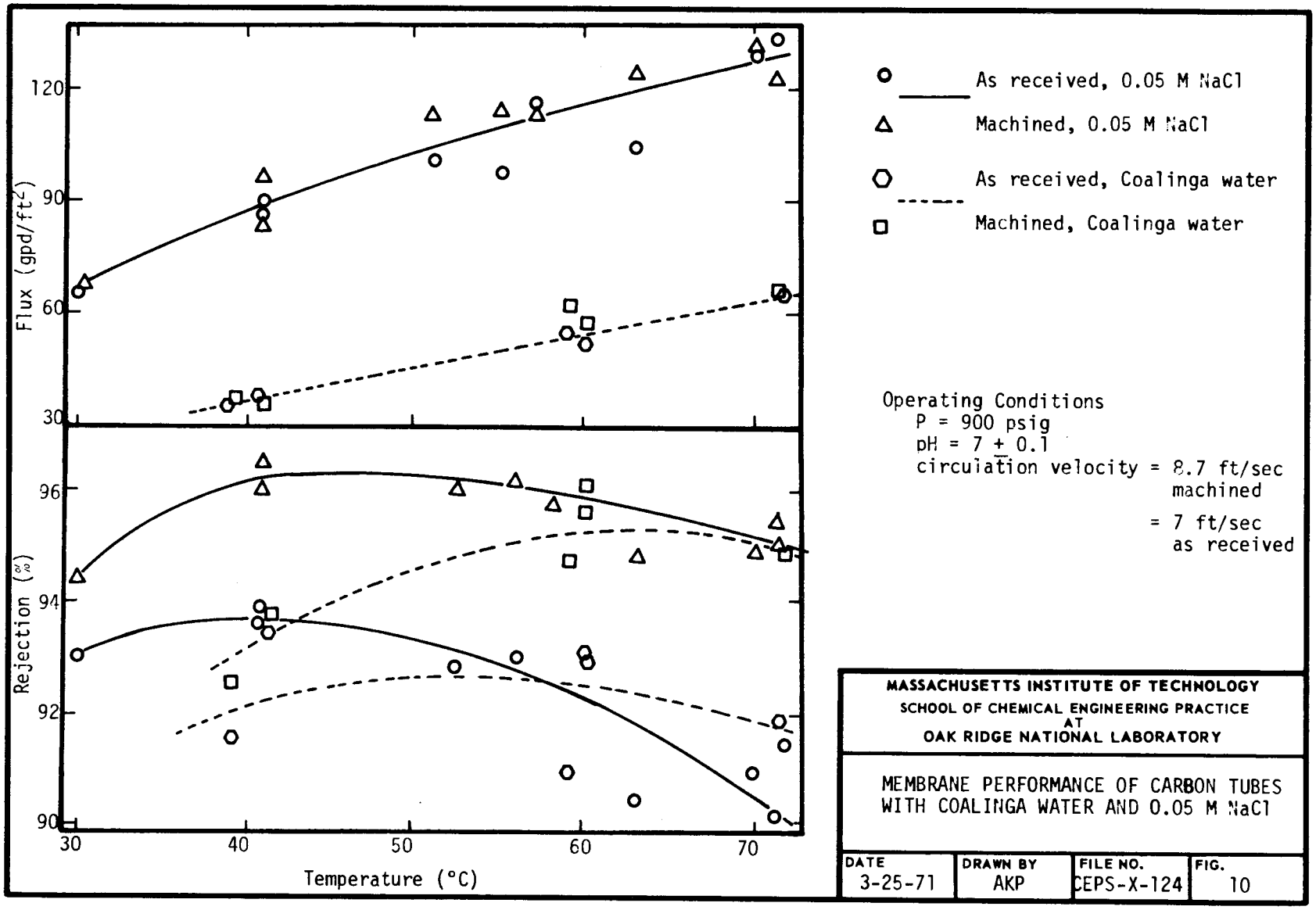
Flux (gpd/ft²)
120
90
60
30
Rejection (%)
96
94
92
90
30
40
50
60
70
Temperature (°C)
As received, 0.05 M NaCl
Machined, 0.05 M NaCl
As received, Coalinga water
Machined, Coalinga water
Operating Conditions
P = 900 psig
pH = 7 ± 0.1
circulation velocity = 8.7 ft/sec machined
= 7 ft/sec as received
MASSACHUSETTS INSTITUTE OF TECHNOLOGY
SCHOOL OF CHEMICAL ENGINEERING PRACTICE
AT
OAK RIDGE NATIONAL LABORATORY
MEMBRANE PERFORMANCE OF CARBON TUBES
WITH COALINGA WATER AND 0.05 M NaCl
DATE 3-25-71
DRAWN BY AKP
FILE NO. CEPS-X-124
FIG. 10

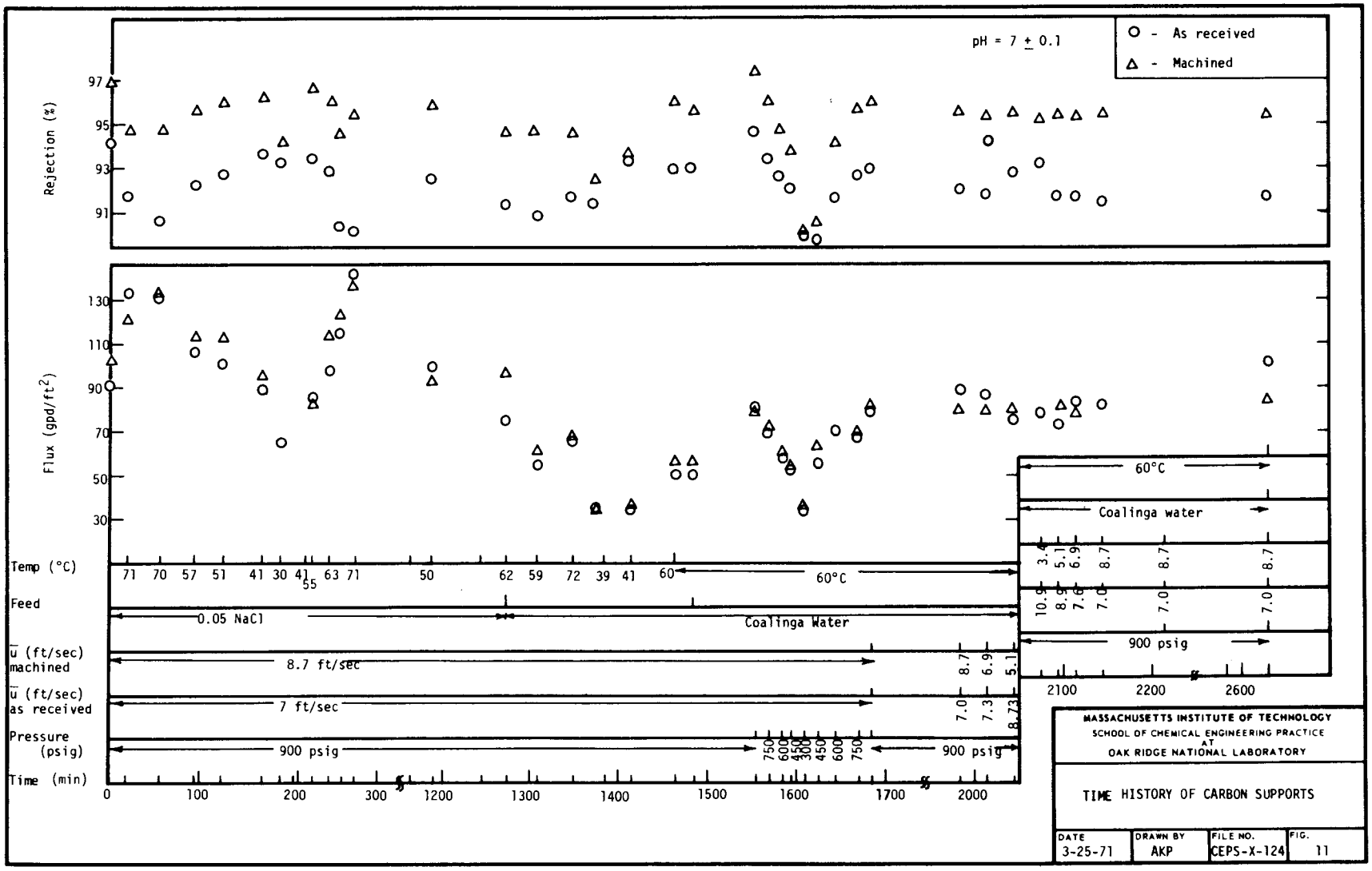
pH = 7 ± 0.1
O - As received
Δ - Machined
Rejection (%)
Flux (gpd/ft²)
Temp (°C)
Feed
0.05 NaCl
Coalinga Water
60°C
ū (ft/sec) machined
8.7 ft/sec
ū (ft/sec) as received
7 ft/sec
Pressure (psig)
900 psig
Time (min)
Coalinga water
900 psig
MASSACHUSETTS INSTITUTE OF TECHNOLOGY
SCHOOL OF CHEMICAL ENGINEERING PRACTICE
AT
OAK RIDGE NATIONAL LABORATORY
TIME HISTORY OF CARBON SUPPORTS
DATE 3-25-71
DRAWN BY AKP
FILE NO. CEPS-X-124
FIG. 11

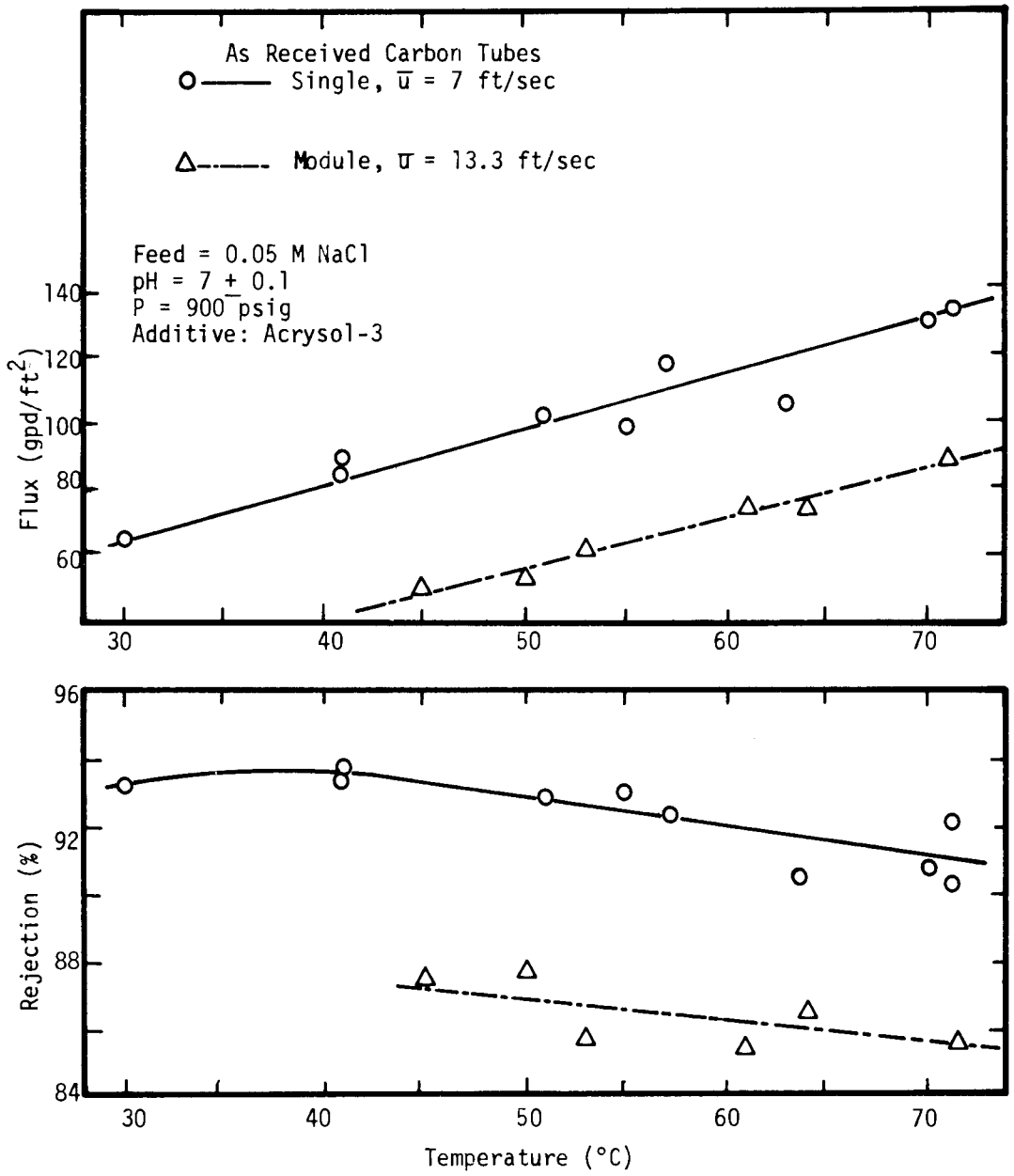

MASSACHUSETTS INSTITUTE OF TECHNOLOGY
SCHOOL OF CHEMICAL ENGINEERING PRACTICE
AT
OAK RIDGE NATIONAL LABORATORY

PERFORMANCE OF CARBON MODULE COMPARED TO A SINGLE TUBE

DATE	DRAWN BY	FILE NO.	FIG.
3-25-71	AKP	CEPS-X-124	12

2) A non-uniform flow distribution or different hydrodynamics in the module could have resulted in poor membrane deposition over the length of the tube.

3) The PAA concentration in the feed to both systems was the same. Since the module has a surface area 50 times greater than the single tube, the feed to the module may have contained insufficient PAA to form a good membrane resulting in lower rejections.

Confirmation of these experiments must await a mass balance for zirconium hydrous oxide and PAA during membrane formation.

The effect of temperature on the membrane performance in the module is similar to that previously discussed for single carbon tubes; however, a maximum in the rejection was not observed for the module (temperature > 45°C).

4.3 Comparison of Carbon and Ceramic Supports

It is believed that the machined 6-C carbon supports with A-3 are more promising than any of the ceramic supports studied for the following reasons:

1) The machined carbon supports are not nearly as fragile as the promising ceramic supports (0.12 and 0.27 μ Selas).

2) The machined carbon supports can withstand higher internal pressure (1000 psi) than can the strongest, promising ceramic supports (550 psi for the 0.27 μ Selas). Since future operation may require flow inside the support tubes, a higher maximum internal pressure is an advantage.

3) No strict comparison between the performance of the machined carbon and ceramic supports is possible because no measurements were taken under identical operating conditions. However, it is believed that the following relative advantages and disadvantages can be concluded:

a) Rejections above 90% were obtained routinely at flow rates of 7 to 8 ft/sec with machined carbon supports (at 900 psi and 60°C), but such rejections were not possible at these low flow rates for any of the ceramic supports studied (at 950 psi and 25°C). Although the pressure was high and the temperature lower for the ceramics, the cumulative effect on rejections is believed to be small (see Sect. 4.2.1). Therefore lower circulation velocities would result in lower pumping costs.

b) Rejections above 90% were obtained at pressures as low as 300 psi with machined carbon supports (at 60°C and 8.7 ft/sec) but high rejections were not possible at this pressure for the ceramic supports (at 25°C and 35 ft/sec). Although the circulation velocities were higher and the temperature lower for the ceramics, the

combined effect on rejection is assumed to be small (see Sect. 4.2.1). Therefore operation at lower pressures with the carbon tubes seems to be a clear advantage.

c) Product fluxes may be lower for carbon tubes than for the promising ceramic supports. At 29°C, 900 psi, and 8.7 ft/sec the machined carbon support yielded a flux of 67 gpd/ft^2, but a flux of 77 to 102 gpd/ft^2 was obtained with the 0.27 μ Selas at 25°C, 950 psi, and 35 ft/sec. The effect of higher circulation velocities generally increases the flux; therefore the two supports might have comparable fluxes at the same circulation velocity. A temperature difference of 4°C results in a flux change of approximately 8%.

5. CONCLUSIONS

1. The Union Carbide 6-C machined carbon tubes yielded the most promising results. Sodium chloride rejections of 97% and product water fluxes of 80 gpd/ft^2 were obtained with Acrysol A-3. The as received carbon tubes gave similar fluxes but poorer rejections. These results are comparable to those obtained with the porous stainless steel supports.

2. The carbon module containing seven 128-cm-long as received carbon tubes yielded lower rejections (6% lower) and fluxes (∿45 gpd/ft^2) than did a single (13.5 cm long) carbon tube.

3. Satisfactory performance was obtained with 0.27 μ Selas ceramic supports with Acrysol A-1 and A-3 and with a 0.12 μ Selas support with Acrysol A-3. The 0.8 μ Selas support is too fragile for commercial use.

4. Tamol 850 and Acrysol A-5 did not yield good membranes on the supports tested.

5. The operating conditions had a considerable effect on the performance of the membranes. Increasing the pressure increased both the rejection and flux. Increasing the circulation velocity decreased the effect of concentration polarization and so increased the rejection and flux. Increasing the temperature increased the flux considerably, but the rejections were effected only slightly.

6. The use of filteraid on a Ferro 202 ceramic support gave relatively low rejections (67%).

6. RECOMMENDATIONS

1. Further investigation of carbon 6-C tubes is recommended to determine the optimum operating and membrane formation conditions and the performance for flow inside and outside the tube.

2. A mass balance of the additives used in membrane formation is needed to estimate additive concentrations for larger modules.

3. An economic comparison between hyperfiltration systems with carbon and stainless steel supports should be conducted.

7. ACKNOWLEDGEMENTS

We would like to thank our consultants, R.E. Minturn and J.S. Johnson, Jr., for their assistance and guidance during this project. We also would like to thank L. Dresner for his assistance in the theoretical aspects of this work, C.G. Westmoreland and L. Fairchild for operational procedures of the apparatus, and J. Denton for helping with necessary adjustments of the equipment.

8. APPENDIX

8.1 Location of Original Data

The original data for this project are on file in Room F-58, Bldg. 4500-S, in Loop VII Lab book C, pp. 24-47, and Loop VIII Lab book 1, pp. 90-101.

8.2 Procedure for Membrane Formation

In all experiments conducted, membranes were formed using the standard procedure developed for stainless steel-Acropor/Millipore supports. The procedure used for Loop VIII (carbon supports) differed only slightly from that used on Loop VII (ceramic supports).

On Loop VII, the initial membrane sublayer was formed by circulating a 0.05 M NaCl solution containing 10^{-4} M zirconium (IV) hydrous oxide at 35 ft/sec, 950 psig, 25°C, and a pH between 2.5 and 4. After NaCl rejections of approximately 40% were obtained, a 5-min water wash was begun at the same pH. The polycarboxylic acid layer was deposited from 50 liter of solution containing 0.05 M NaCl, 50 ppm of polycarboxylic acid, and 35 ml of HCl at the same temperature, pressure, and circulation velocity. The pH of the solution was gradually adjusted to 7.0 over approximately two hours by adding NaOH. Membrane formation was complete at this stage.

In Loop VIII the same procedure was followed except that the temperature was 60°C and the circulation velocity was 7 to 8 ft/sec over the single carbon supports and 13.7 ft/sec over the carbon module.

8.3 Sample Calculations

8.3.1 Observed Rejection

By definition,

$$\text{observed rejection} = \frac{\text{salt conc. in feed - salt conc. in product}}{\text{salt concentration in feed}}$$

$$R_{obs} = \frac{C_f - C_p}{C_f} = 1 - \frac{C_p}{C_f}$$

Concentration of product and feed was measured in terms of restivities:

$$\frac{C_p}{C_f} = \frac{\Omega_f}{\Omega_p} \quad \text{is a good assumption}$$

where:

C_f = salt concentration of feed

C_p = salt concentration of product

Ω_f = resistance of feed, ohm

Ω_p = resistance of product, ohm

or

$$R_{obs} = 1 - \frac{\Omega_f}{\Omega_p}$$

One typical data set for carbon supports is:

$$\Omega_f = 215 \text{ ohm and } \Omega_p = 722 \text{ ohm}$$

$$\therefore \quad R_{obs} = 1 - \frac{215}{722} = 1 - 0.297 = 0.703 = 70.3\%$$

8.3.2 Flux

Product water flux is determined either by measuring the product water with a calibrated precision-bore flowrator tube or by measuring the flow in a graduated cylinder for a known time period.

$$J = 354 \frac{Q}{A}$$

where:

J = water flux, gpd/ft^2

Q = volumetric product rate, cm^3/min

A = surface area of porous support, cm^2

For the carbon module,

total product rate = 546 cc/min

per tube, $Q = \frac{546}{7} = 78$ cc/min

length of carbon tube = 128 cm

outer diameter of carbon tube = 1.02 cm

$$\therefore \quad A = \pi (1.02)(128) \text{cm}^2$$

$$J = \frac{(354)(78)}{(128)(1.02\pi)} = 67.30 \text{ gpd/ft}^2$$

8.3.3 Calculation of Colburn Parameter

Carbon supports at 60°C,

feed = 0.05 M NaCl solution

tubes = machined carbon

d_2 = (61/64) in. = 0.9531

d_1 = 0.4007 in.

$$a = \frac{d_1}{d_2} = \frac{(0.4007)(64)}{61} = 0.4204$$

$$\lambda = \frac{d_m}{d_2} = \frac{d_1 + d_2}{2d_2} = \frac{0.4007 + 0.9531}{(2)(0.9531)} = 0.7102$$

Colburn parameter, K, for the annular flow geometry is given by

$$K = \left[\frac{a(1 - \lambda^2)}{\lambda^2 - a^2}\right]\left[\frac{1}{0.0395}\right]\left[\frac{1 - a}{1 - \lambda^2}\right]^{-1/4} \qquad (2)$$

$$= \left[\frac{0.4202[1 - (0.7102^2)]}{(0.7102)^2 - (0.4202)^2}\right]\left[\frac{1}{0.0395}\right]\left[\frac{1 - 0.4202}{1 - (0.7102)^2}\right]^{-1/4}$$

$$= 15.48$$

Experimentally from Fig. 9,

$$\text{slope for machined carbon support} = \frac{\ln 0.05 - \ln 0.041}{26.6 \times 10^{-5}}$$

$$= 746\ (\text{cm/min})^{-0.25}$$

$$= 2076\ (\text{cm/sec})^{-0.25}$$

From Eq. (2),

$$\text{slope} = K[(\frac{d_2 - d_1}{\nu})^{1/4}(\frac{\nu}{\mathcal{D}})^{2/3}] = 2076$$

$$d_2 - d_1 = 1.40316 \text{ cm}$$

$$\nu_{60°C} \approx 0.0050 \text{ cm}^2/\text{sec}$$

$$\mathcal{D} \approx 1.5 \times 10^{-5} \text{ cm}^2/\text{sec}$$

$$K[(\frac{1.40316}{0.0050})^{1/4}\ (\frac{0.0050}{0.000015})^{2/3}] \quad ; \quad 197.15K = 2076$$

$$\therefore \quad K = \frac{2076}{197.15} = 10.53$$

$$K_{experimental} = 10.53$$

$$K_{theoretical} = 15.48$$

8.4 Discussion of Errors

8.4.1 Sources of Errors

Errors in the experimental values may have been caused by the following factors:

1. Loop cleanup. Incomplete loop cleanup may leave impurities in the system which could affect membrane formation and performance.

2. Inadvertent shutdown. An inadvertent shutdown may leave the membrane uncompacted; and as the system is started up again, a physical change may occur in the membrane as it readjusts to the higher pressure.

3. Pressure fluctuations. Pressure fluctuations may alter the structure of the membrane.

4. Transient conditions. Failure to wait for steady state conditions before taking resistivity measurements leads to inaccurate rejection values.

5. Flow rate. Inaccuracy in the flowrator readings could result in an error in the flux measurements.

6. Constant temperature. It was very difficult to maintain a constant temperature in Loop VIII during a run. The temperature changed as much as 2°C during a run resulting in ~4% error in the flux readings.

8.4.2 Reproducibility of the Data

It is estimated from observing the reproducibility in duplicated measurements that: (1) rejections in the same run are reproducible to within approximately ± 1%, (2) rejections from one run to another using membranes formed in the same way are reproducible to within ± 2.5%, (3) fluxes are reproducible in the same run within ± 5 gpd/ft^2, and (4) fluxes are reproducible from one run to another within ± 10 gpd/ft^2.

8.5 Nomenclature

a	d_1/d_2
A	surface area of porous supports, cm^2
B	membrane permeability, gpd/ft^2-psi
C_f	concentration of feed, moles/cm^3
C_p	concentration of product, moles/cm^3
d_1	inner diameter of annulus, cm
d_2	outer diameter of annulus, cm
d_m	mean diameter $= \sqrt{\dfrac{d_2^2 - d_1^2}{2\ln(d_2/d_1)}} \approx \dfrac{d_1 + d_2}{2}$, cm
D^*	distribution coefficient of salt in membrane to salt in water contacting membrane
J	product water flux, gpd/ft^2
K	Colburn parameter
L	length of tube, cm
ℓ	diffusion path, cm

P	operating pressure, psi
ΔP	pressure drop across filtration surface, psi
Q	volumetric product rate, cm^3/min
R_o, R_{obs}	observed rejection
R_i	intrinsic rejection
S	surface area per unit volume of particles, cm^2/cm^3
T	temperature, °C
$\bar{u}$	circulation velocity, cm/sec
V_o	flux velocity, cm/sec
Z	constant in Kozeny equation, Eq. (3)

Subscripts

f	final condition
i	initial condition

Greek Symbols

ν	kinematic viscosity of liquid, cm^2/sec
μ	viscosity of liquid, g/cm-sec
$\mathcal{D}$	diffusion coefficient of water in salt solution-swollen membrane, cm^2/sec
ε	porosity
Ω_f	resistivity of feed, ohm
Ω_p	resistivity of product, ohm
λ	$\frac{d_m}{d_2} \cong \frac{d_1 + d_2}{2d_2}$
$\Delta\pi$	osmotic pressure, psi

8.6 Literature References

1. Coulson, J.M., and J.F. Richardson, "Chemical Engineering," 2nd ed., Vol. 2, pp. 4-14, Pergamon Press, New York (1968).

2. Heman, A.J., and J.C. Bronfenbrenner (Consultants: J.S. Johnson, Jr., and R.E. Minturn), "Concentration Polarization in Annular Flow Systems with Dynamically Formed Membranes," ORNL-MIT-112, M.I.T. School of Chemical Engineering Practice, ORNL (October 20, 1970).

3. Johnson, J.S., Jr., L.Dresner, and K.A. Kraus, "Hyperfiltration (Reverse Osmosis)" in "Principles of Desalination," K.S. Spiegler, ed., p. 378, Academic Press, New York (1966).

4. Perona, J.J., F.H. Butt, S.M. Fleming, S.T. Mayr, R.A. Spitz, M.K. Brown, H.D. Cochran, Jr., K.A. Kraus, and J.S. Johnson, Jr., "Hyperfiltration. Processing of Pulp Mill Sulphite Wastes with a Membrane Dynamically Formed from Feed Constituent," Environmental Sci. Tech., 1(2), 991 (1967).

5. Perry, J.H., et al., "Chemical Engineers' Handbook," 4th ed., p. 3-201, McGraw-Hill, New York (1963).

6. Sherwood, T.K., P.L.T. Brian, and R.E. Fisher, "Desalination by Reverse Osmosis," I&EC Fundamentals, 6(1), 2 (1967).

7. OSW Research and Development Report, Quarterly Report for the Period September 15, 1969 - December 16, 1969. Water Research Program, ORNL, Oak Ridge, Tenn.

8. OSW Research and Development Report, Quarterly Report for the Period June 15, 1970 - September 15, 1970, Water Research Program, ORNL, Oak Ridge, Tenn.

ORNL-MIT-124

INTERNAL

1. L. Dresner
2-6. J.S. Johnson, Jr.
7. K.A. Kraus
8. H.A. Mahlmann
9-13. R.E. Minturn
14. G.E. Moore
15. Lewis Nelson
16. R.J. Raridon
17. J.D. Sheppard
18. A.J. Shor
19. W.G. Sisson
20. D.G. Thomas
21. D.B. Trauger
22. C.G. Westmoreland
23-24. Central Research Library
25. Document Reference Section
26-28. Laboratory Records
29. Laboratory Records, ORNL R.C.
30. ORNL Patent Office
31-45. M.I.T. Practice School

EXTERNAL

46. R.F. Baddour, MIT
47. L.A. Clomburg, MIT
48. S.M. Fleming, MIT
49. H.P. Meissner, MIT
50. H.E. Podall, U.S. Dept. of Interior