TE: THIS REPORT HAS BEEN MADE AVAILABLE FOR USE BY ORNL AND THE AEC AND IS NOT TO BE TRANSMITTED TO OTHER ORGANIZATIONS OR TO PRIVATE INDIVIDUALS.

Technical Report of the

Molten - Salt Group

Part II

EVALUATION OF A 1000 MWe MOLTEN - SALT BREEDER REACTOR

EBASCO SERVICES INCORPORATED
TWO RECTOR STREET
NEW YORK
OCTOBER 1971

71:023

Technical Report of the
Molten-Salt Group

Part II

EVALUATION OF A 1000 MWe MOLTEN-SALT BREEDER REACTOR

Edited by

J. R. Trinko

D. R. deBoisblanc
Technical Director

PREFACE

Ebasco Services Incorporated has followed the research and development of molten salt reactor technology at ORNL for many years. As early as 1968, it became evident that the technology was sufficiently advanced to warrant the serious attention of utilities and nuclear industries. Accordingly, L F C Reichle, Vice President, Nuclear Department of Ebasco Services Incorporated, proposed the formation of the Molten Salt Group (MSG) and organized the combination of utilities and industries for the purpose of undertaking an independent, in-depth study of this technology with the utilities supplying financial support and the industries senior level technical participants (Table 1). This study was performed in New York as a group effort under the technical direction of Ebasco Services Incorporated. The principal participants, their titles, and companies are presented in Table 2.

The study aims:

1 - To evaluate the state of molten reactor technology,

2 - To develop a critique of a 1000 MWe MSBR concept,

3 - To identify technological uncertainties and necessary research and development,

4 - To generate alternate MSR concepts based on the experienced engineering of industries well established in the field of nuclear power.

This report, Part II, is concerned with the second objective. Part I is concerned primarily with the state of molten salt reactor technology but may also include other technical topics.

The conduct of this study depended upon the availability of technical information from ORNL. The interest demonstrated by the laboratory and the many private communications with laboratory scientists were an indispensable part of this effort.

Table 1

MOLTEN SALT GROUP PARTICIPANTS

Industries:

Babcock & Wilcox Company

Byron Jackson Pump Division,
Borg-Warner Corporation

Stellite Division, Cabot Corporation

Continental Oil Company, Inc

Ebasco Services Incorporated,
A Boise Cascade Company

Union Carbide Corporation,
Carbon Products Division

Utilities:

Dallas Power & Light Company

Houston Lighting & Power Company

Kansas Gas and Electric Company

Middle South Services, Incorporated representing -

Arkansas Power & Light Company
Louisiana Power & Light Company
Mississippi Power & Light Company
New Orleans Public Service, Incorporated

Minnesota Power & Light Company

Northeast Utilities Service Company representing -

Connecticut Light and Power Company
Hartford Electric Light Company
Holyoke Water Power Company
Western Massachusetts Electric Company

Texas Electric Service Company

Texas Power & Light Company

Union Electric Company

Table 2

Principal Contributors

Dr Jerry A Acciarri, Fuels Technology Development, Research & Engineering Department, Continental Oil Company.

Mr R M Bushong, Assistant to Director of Advanced Technology Projects, Carbon Products Division, Union Carbide Corporation.

Mr Gary C Clasby, Senior Project Engineer, Byron Jackson Pump Division, Borg-Warner Corporation.

Dr D R deBoisblanc, Chief Consulting Nuclear Engineer and Manager of R&D, Ebasco Services Incorporated.

Mr B J Goulding, Supervisor of Mechanical Design in Nuclear Power Generation Department, Babcock & Wilcox Company.

Mr R F Martinez, Senior Chemical Engineer, Ebasco Services Incorporated.

Dr H C Ott, Manager Nuclear Technology, Ebasco Services Incorporated.

Mr T K Roche, Senior Metallurgical Engineer, Cabot Corporation.

Mr H K Smith, Senior Mechanical Engineer, Babcock & Wilcox Company.

Dr J R Trinko, Senior R&D Scientist, Ebasco Services Incorporated.

TABLE OF CONTENTS

		Page No.
1.0	INTRODUCTION	1
2.0	SUMMARY AND CONCLUSIONS	3
2.1	Introduction	3
2.2	General Conclusions Regarding MSR Technology	3
2.3	General Conclusions Regarding the Reference Concept	3
2.4	Specific Problem Areas	4
2.4.1	Hastelloy N (Modified)	4
2.4.2	Chemical Processing	8
2.4.3	Coolant Medium	12
2.4.4	Tritium	15
2.4.5	Graphite	17
2.4.6	Reactor Physics	20
2.4.7	Components	21
2.4.8	Maintenance and Repair	24
2.4.9	Safety	25
3.0	CONCEPTUAL DESCRIPTION OF A 1000 MWe MSBR	27
3.1	General	27
3.2	Primary System	28
3.3	Secondary Salt Circulating System	38
3.4	Steam Power System	40
3.5	Chemical Processing System	44
3.5.1	Uranium Removal	44
3.5.2	Protactinium Extraction	45
3.5.3	Rare Earth Removal	45
3.5.4	Fuel Salt Reconstitution	45
3.5.5	Rare Earth Transfer	46
3.5.6	Trivalent Rare Earth Extraction	47
3.5.7	Divalent Rare Earth Extraction	47
3.5.8	Protactinium Decay, Uranium Recovery, Divalent Rare Earth Removal	48
3.5.9	Trivalent Rare Earth Removal, Salt Purge	49
4.0	SYSTEM DESIGN CRITERIA	77
4.1	General Criteria	77
4.2	Specific Criteria	77
4.3	Optimization: Conservation Coefficient	79
5.0	REACTOR INTERNALS	81
5.1	Graphite Moderator Elements	81
5.2	Graphite Replacement	85

TABLE OF CONTENTS (Cont'd)

	Page No.
6.0 MAJOR COMPONENT EVALUATIONS	86
6.1 Introduction	86
6.2 Reactor Vessel	86
6.2.1 Mechanical Design	87
6.2.2 Vessel Arrangement	87
6.2.3 Thermal Stresses	89
6.2.4 Thermal-Hydraulic Design	91
6.2.5 Fabricability	92
6.3 Primary Heat Exchanger	93
6.3.1 Mechanical Design	95
6.3.2 Thermal-Hydraulic Aspects of Design	98
6.3.3 Fabricability	99
6.3.4 Future Considerations	100
6.4 Steam Generator	100
6.4.1 Mechanical Design	102
6.4.2 Thermal-Hydraulic Design	103
6.4.3 Fabricability	104
6.5 Reheater	104
6.6 Mechanical Pumps	105
6.6.1 Fuel Salt Pumps	105
6.6.2 Auxiliary Fuel-Salt Pumps	114
6.6.3 Coolant-Salt Pumps	115
6.6.4 Main Boiler Feedwater Pumps	117
6.6.5 Boiler-Feedwater Pressure-Booster Pumps	118
6.6.6 Low Pressure Boiler-Feedwater Booster Pumps	120
7.0 SPECIAL MATERIALS	121
7.1 Fuel Salt	121
7.1.1 Physical Property Requirements	121
7.1.2 Possible Reasons for Reconsidering Fuel Salt Composition	124
7.2 Coolant Salt	126
7.2.1 Physical Property Requirements	126
7.2.2 Coolant-Salt Composition and Properties	126
7.3 Compatibility of Fuel Salt and Coolant Salt	128

TABLE OF CONTENTS (Cont'd)

		Page No.
7.4	Graphite	130
7.4.1	Fabrication	131
7.4.2	Handling and Assembly	134
7.4.3	Attachments	135
7.4.4	Corrosion, Erosion, and Permeation of Salt	135
7.4.5	Radiation Effects	136
7.5	Hastelloy N	140
7.5.1	Primary System	143
7.5.2	Secondary System	145
7.6	Materials for Chemical Process Plant	146
8.0	NUCLEAR CHARACTERISTICS	148
8.1	Basis for Nuclear Performance Evaluation	148
8.1.1	Peak Fast Neutron Fluence	148
8.1.2	Equilibrium Salt Composition	149
8.1.3	Nuclide Removal Times	150
8.1.4	Poison Fraction	155
8.1.5	Delayed Neutrons	156
8.1.6	Conclusions	157
8.2	Basis for Concept Selection	157
8.3	Optimization of Core Design	160
8.4	Review of Input Data	162
8.5	Nuclear Analysis Methods	163
8.6	Reactivity Coefficients	167
8.7	Gamma and Neutron Heating	169
8.8	Fission Product Heating	169
9.0	FUEL SALT DRAIN TANK SYSTEM	171
10.0	FUEL SALT CHEMICAL PROCESSING SYSTEM	174
10.1	Objectives	174
10.2	Description	174
10.2.1	Uranium Removal	175
10.2.2	Protactinium Extraction	176
10.2.3	Rare Earth Removal	176
10.2.4	Fuel Salt Reconstitution	177
10.2.5	Rare Earth Transfer	178
10.2.6	Trivalent Rare Earth Extraction	179
10.2.7	Divalent Rare Earth Extraction	179
10.2.8	Protactinium Decay - Uranium Recovery - Divalent Rare Earth Removal	180
10.2.9	Trivalent Rare Earth Removal - Salt Purge	181

TABLE OF CONTENTS (Cont'd)

		Page No.
10.3	Material Balance	181
10.4	Technology	191
10.4.1	Uranium Removal	191
10.4.2	Reductive Extraction	204
10.4.3	Rare Earth Transfer	209
10.4.4	Oxidation	212
10.4.5	Protactinium Decay Tank	213
10.4.6	Fuel Salt Reconstitution	213
10.4.7	Other Considerations	215
10.4.8	Options	215
11.0	PURGE-GAS SYSTEM	217
11.1	Loop Experiments	217
11.2	MSRE Experience	218
11.3	MSBR Reference Concept	219
12.0	OFF-GAS SYSTEM	222
12.1	47-Hour Charcoal Beds	222
12.2	90-Day Holdup Charcoal Beds	224
12.3	Tritium Removal	225
13.0	MAINTENANCE AND REPAIR	226
13.1	Semi-Direct	227
13.2	Remote	227
13.3	Core Replacement	228
13.4	Component Replacement	232
13.5	Decontamination	232
14.0	INSTRUMENTATION AND CONTROL	234
14.1	Short-Term Reactivity Control	235
14.2	Long-Term Reactivity Control	237
14.3	Xenon Transients	238
14.4	Measurements	240
15.0	PLANT OPERATION	242
15.1	Load Following	242
15.2	Startup	242
15.3	Decay Heat Removal	244
16.0	RADIOACTIVE MATERIAL DISPOSAL	245

TABLE OF CONTENTS (Cont'd)

	Page No.
17.0 TRITIUM PROBLEM	246
17.1 Consequences of Tritium Release	246
17.2 Measurement of Tritium Releases from MSRE	247
17.3 Possible Solutions to the Tritium Problems	248
17.4 Comparison of Xe Removal and T_2 Removal from Fuel Salt	254
17.4.1 Limitations of Circulating Bubbles	254
17.4.2 Salt-Gas Interface Area	255
17.4.3 Gas Purge Rate	255
17.4.4 Side-Stream Stripping	256
17.4.5 Summary	258
18.0 ACKNOWLEDGEMENTS	259

LIST OF TABLES

Number	Title
3.1	Summary of Principle Data for a Conceptual 1000 MWe MSBR Power Station
3.2	Nuclear Performance Data
3.3	Chemical Processing Data
3.4	Neutron Balance Data
3.5	Tritium Production and Distribution
3.6	Isothermal Reactivity Coefficients
3.7	Terminology Used to Designate Regions and Zones of Reactor
3.8	Volumes and Weights in MSBR Core and Reflectors
3.9	Graphite Element Design Data
3.10	Reactor Vessel Design Data
3.11	Primary Heat Exchanger Design Data
3.12	Pump Design Data
3.13	Drain Tank Design Data
3.14	Steam Generator Design Data
3.15	Steam Reheater Design Data
3.16	Reheat-Stream Preheater Design Data
3.17	Steam System Design Data
3.18	Cell Heating Load Design Data
3.19	Design Properties of Fuel Salt
3.20	Design Properties of Coolant Salt
3.21	Design Properties of Graphite
3.22	Hastelloy N (Modified) Composition and Design properties

LIST OF TABLES (Cont'd)

Number	Title
7.1	Weights of Graphite Components In The Reactor Core
7.2	Chemical Composition of Standard and Modified Hastelloy N
8.1	Nuclide Removal Times
8.2	Ten Most Significant Parasitic Neutron Absorbers
8.3	Calculated Nuclear Performance of 1000 MW(e) MSBR Design Concepts
8.4	Comparison of ROD and CITATION Calculations of the MSBR Reference Design
10.1	Flow Rates and Concentrations for Chemical Processing System Flow Sheet for Figure 10.1
10.2	Removal Times and Concentrations of Fission Products In The Chemical Processing Plant
10.3	Sizes of Selected Vessels In The Chemical Processing Plant
10.4	Fluorination of UF_4 to UF_6 in Molten Salts
10.5	Volatile Fission Products From Molten Salt Fluorination
10.6	Distribution Coefficient Between Bismuth Containing 0.2 Mole Percent Lithium and Salt (72-16-12 Mole Percent $LiF-BeF_2-ThF_4$) at 600°C
10.7	Distribution Coefficient Between Bismuth Containing 0.2 Mole Percent Lithium and Salt (72-16-12 Mole Percent $LiF-BeF_2-ThF_4$) at 600°C
10.8	Distribution Coefficients Between Bismuth Containing 0.2 Mole Percent Lithium and Lithium Chloride at 640°C

LIST OF FIGURES

Number	Title
3.1	Plot Plan for 1000 MWe MSBR Power Station
3.2	Plant Schematic Flow Diagram for 1000 MWe MSBR Power Station
3.3	Overall Plan View of 1000 MWe MSBR Power Station
3.4	Sectional Elevation of 1000 MWe MSBR Power Station
3.5	Simplified Flow Diagram of Primary Drain Tank and Heat Removal System Using NaK
3.6	Cross Sectional Elevation of Reactor and Steam Cells
3.7	Plan View of Reactor and Steam Cells
3.8	Plan View of Reactor Vessel
3.9	Sectional Elevation of Reactor Vessel
3.10	Graphite Moderator Element for Zone I
3.11	Graphite Moderator Element for (a) Zone I-A, and (b) Zone I-B of Reactor Core
3.12	Graphite Moderator Element for Zone II of Reactor Core
3.13	Plan View of Graphite Reflector and Moderator Elements
3.14	Primary Salt Circulation Pump
3.15	Sectional Elevation of Primary Heat Exchanger
3.16	Schematic Diagram of MSBR Off-Gas System
3.17	Preliminary Concept of MSBR Bubble Generator
3.18	Elevation of Drain Tank Cell
3.19	Sectional Elevation Through Reactor Plant Building
3.20	Plan View of Reactor Plant at Crane Bay Elevation
3.21	Plan View of Reactor Plant at Reactor Cell Elevation
3.22	Plan View of Reactor Plant at Waste Storage Cell Elevation

LIST OF FIGURES (Cont'd)

Number	Title
3.23	MSBR Core Assembly Transport Cask and Maintenance System
3.24	Chemical Processing System Flow Diagram
5.1	Core Lifting Rod Access Holes
5.2	Reactor Core Lifting Rod Assembly
7.1	Lineal Dimensional Change in Gilso-Carbon Base Graphite
7.2	Lineal Dimensional Change in AXQ Graphite
8.1	After Heat Distributions with Saturation Concentrations of Fission Products in a 1000 MWe Single Fluid MSBR Fueled with ^{235}U
10.1	Chemical Processing System Flow Diagram
10.2	Process Flow Sheet for Continuous Fluorination of Uranium in Molten Salt
10.3	Frozen Wall Continuous Fluorination Reactor
11.1	Xenon-135 Posion Fraction as a Function of Percent Bubbles Stripped from Fuel Loop per Cycle

1.0 INTRODUCTION

Molten salt reactor technology has been almost the exclusive province of the Oak Ridge National Laboratory. The Laboratory has remained devoted for many years to the careful, systematic investigation of the many areas of physics, chemistry, metallurgy and nuclear technology that must be understood in order to design a successful molten salt reactor.

In studying the potential of molten salt breeders to be designed, built and operated reliably and economically in the electric utility environment, it was thought that, rather than a review of the technology alone, it was desirable to critically appraise an integrated conceptual plant. It was also thought that this plant should represent the most promising system that had been given serious design consideration. In examining the literature from ORNL, no description of a complete plant existed. A concept which has been studied over the last several years, and which has been described in a fairly complete manner in ORNL information meetings and in the published literature[1/], was selected as a starting point. A conceptual plant was assembled by the Molten Salt Group in rough draft form from other ORNL progress and topical reports in which each component was selected as the most promising design available at ORNL.

It should be emphasized here that no attempt was made to do original design but to take only designs which had been studied and described by the Laboratory. This rough draft was sent to ORNL and later discussed with the molten salt staff to obtain their concurrence that each element represented the most promising approach then available. After consideration of ORNL recommendations, the plant described in Section 3.0 of this report resulted.[2/]

The plant described has been subjected to an independent critical review by the Molten Salt Group to determine the extent to which it was,

1/ Nuclear Applications and Technology, 8 (1970).

2/ Since this selection was made, the topical report, ORNL-4541, has been issued which, in the final edited form, contains many, but not all, of the plant systems constituting the concept selected for this critique.

1.0 INTRODUCTION (Cont'd)

in our opinion, supported by the present state of the molten salt technology and by good power plant engineering.

In an overall sense the concept demonstrates the problems facing a designer of a high performance Molten Salt Breeder Reactor and reflects the constraints imposed by simultaneously attempting to achieve acceptably high breeding ratio (~1.06) and a short doubling time (~25 years). The effect of high performance is felt to the greatest degree in the core configuration, vessel, primary piping and the intermediate heat exchanger. The need to prevent freezing of the salt mixtures adds to unusual requirements on the structures, seismic restraints and plant arrangements which offer great challenges, and which have not been treated in detail in any of the supporting documents published by ORNL.

One principal purpose of this critique is to spotlight areas where alternate approaches seem necessary, without attempting to suggest what form such alternates might take. It also indicates those features which seem to be consistent with both MSR technology and industrial design practice.

Recalling again that many of the unusual approaches stem from the goal of a high performance breeder, it will be seen that this design does not, nor was it intended to, describe MSR converters or break-even breeders which can be designed with much greater latitude and which could become quite different in concept.

2.0 SUMMARY AND CONCLUSIONS

2.1 Introduction

The purpose of this study was to generate an independent appraisal of the technical feasibility of a specific MSBR concept. Therefore, much of our attention and, hence, much of this document was directed toward technological and design uncertainties or weaknesses found in this concept. This document is not, however, intended to detract in any way from the excellent R&D done by ORNL. Instead, our intent is to clarify to the utilities the potential of MSBR's as well as problem areas and engineering feasibility. In addition, this document is intended to contribute to the successful development of MSBR's. We wish to acknowledge and emphasize that ORNL personnel have done a great deal of outstanding and brilliant work, particularly in identifying problems (real or potential), defining R&D goals, and developing MSR technology. The body of technology is extensive and largely complete.

2.2 General Conclusions Regarding MSR Technology

We believe it is possible to build and operate a safe molten salt breeder reactor, although not necessarily the Reference Concept, within existing technology. Assuming all known technology uncertainties are resolved with unfavorable results, MSBR's having breeding ratios slightly greater than unity can still be realized. We do not believe, however, that it is currently possible to design an optimized power plant or to predict adequately the capital or fuel cycle costs, plant reliability or useful life, and many other performance characteristics. Adequate performance data will not become available without the construction and operation of a demonstration plant.

2.3 General Conclusions Regarding the Reference Concept

After appraising the Reference Concept in terms of its supporting technology, we have concluded that it is quite attractive and has a great deal of merit. This concept, however, is based on a considerable, but reasonable, extension of known technology as delineated below.

2.3 General Conclusions Regarding the Reference Concept (Cont'd)

The Reference Concept illustrates the potential of moderately high performance MSBR's to extend fissile resources, to utilize a high efficiency steam cycle, to operate independently from many outside support industries (e g, fuel reprocessing and fabrication), and to operate safely with a low fuel cycle cost. This concept also illustrates the wide latitude of designs and arrangements possible and some imaginative solutions to problems peculiar to MSBR's.

A few key problem areas were not recognized until after this concept was adopted as an ORNL reference design late in 1967. Since that time a few technological difficulties became apparent which affect all ORNL concepts. Nevertheless, this concept is a suitable departure point for exploring the state of MSBR technology, MSBR design criteria, and MSBR potential as a feasible source of power.

The following sections summarize our conclusions regarding the technical feasibility of several aspects of this particular concept.

2.4 Specific Problem Areas

The following sections summarize specific technology uncertainties and/or design aspects which bear on the feasibility of MSBR's, particularly the Reference Concept. The sections appear in order of their impact upon engineering feasibility.

2.4.1 Hastelloy N (Modified)

Corrosion

Hastelloy N (modified or standard) is thermodynamically stable toward a wide range of fluoride salts including the proposed MSBR fuel salt. Experiments have demonstrated that it is sufficiently resistant to corrosion and erosion when exposed to uncontaminated fuel salt.

Post-operation examination of MSRE revealed, however, that all Hastelloy N surfaces in contact with fuel salt contain cracks 5-10 mils deep. The mechanism is believed to be corrosion caused by impurities in the salt. Fission

2.4.1 Hastelloy N (Modified) Cont'd)

Corrosion (Cont'd)

products and oxidizing salt conditions are suspect. The uniform depth of penetration suggests that it is not stress dependent.

While not completely discounted, ORNL believes that fission products are not likely the cause of this attack because similar cracking has been found on test samples exposed to fuel salt uncontaminated with fission products.

Oxidizing salt conditions are believed more likely because oxygen, water vapor, or HF contamination give rise to such a condition. During its four year life MSRE was drained, flushed, and opened 14 times. It is likely that some air entered the primary system each time. To reduce oxidizing conditions beryllium was dissolved into the salt, but this was done infrequently and irregularly. Hence, some oxygen and water vapor contamination was quite possible.

When ^{235}U was recovered from the fuel salt by fluorination, some HF was introduced into the system. Either HF or oxygen contamination, or both, could be the cause of the observed cracking.

A commercial MSBR will be opened much less frequently reducing the opportunity for introducing oxygen. Furthermore, MSBR fuel salt, which differs from MSRE fuel salt primarily by the addition of ThF_4 and the elimination of ZrF_4 (~5 mole % in MSRE), is less tolerant of oxygen. MSBR's will, therefore, require greater care in preventing oxygen contamination. The chemical process plant will extract such contamination and reestablish the desired oxidation potential of the salt after exposure to contamination such as that anticipated during graphite replacement.

The Reference Concept and others were advanced by ORNL prior to the observation of cracking in MSRE Hastelloy. The validity of these concepts now rests on the assumption that

2.4.1 Hastelloy N (Modified) (Cont'd)

Corrosion (Cont'd)

the cracking in MSRE is a form of corrosion which can be eliminated by maintaining the oxidizing potential of the salt sufficiently low. This assumption is inescapable because there is no other known material more resistant to corrosion which could be considered a feasible substitute for heat exchanger tubes. Based on the large quantity of corrosion data available, we agree with ORNL that cracking can be prevented in MSBR's. Thus we regard this phenomenon as a potential problem which could, if neglected, limit the useful life of an MSBR; we do not regard it as a technology barrier which must be resolved prior to the successful operation of an MSBR.

Neutron Irradiation Embrittlement

Standard and, to a lesser extent, modified alloys embrittle under thermal neutron irradiation because of the production of helium in the grain boundaries. Boron, always present in Hastelloy N as an impurity, precipitates at the grain boundaries and gives rise to the production of helium via the $^{10}B(n, \alpha)^{7}Li$ reaction.

To reduce the damage at the grain boundaries, modified alloys contain small amounts ($\leq$2.4 wt %) of Ti and/or Hf. These elements combine with carbon to form a fine, uniformly dispersed particulate which provides nucleation sites for boron other than grain boundaries. By distributing the boron uniformly, the radiation damage will also be distributed uniformly rather than being concentrated at the grain boundaries.

Many small heats of modified alloy have demonstrated satisfactory physical and mechanical properties including ductility after neutron irradiation at temperatures up to 1400 F. Larger heats (100 lb) containing Hf, however, have not been so successful. It is believed that the slower

2.4.1 Hastelloy N (Modified) (Cont'd)

Neutron Irradiation Embrittlement (Cont'd)

cooling rates of the larger heats permit some of the carbides, as well as the boron, to migrate to the grain boundaries.

Heats containing only Ti have been scaled-up successfully. A few 100 lb heats containing up to 2 wt % Ti retain sufficient ductility (4 percent minimum strain to rupture) after neutron irradiation at 1400 F. It is likely that this alloy will be reproducible in larger heats of commercial size. As yet, however, proof is not available. Much scale-up work remains before any of these modified alloys could be qualified for reactor vessels.

Many other less attractive modified alloys have been made in heats up to 5000 lb which demonstrate adequate ductility when irradiated at 1200 F or less. These alloys, also uncoded, have demonstrated reproducibility, and it is believed several could be coded relatively easily. These alloys are satisfactory for MSR design if the design assures that the metal temperature remains safely below 1200 F during all normal modes of operation. Of course, a better alloy is highly desirable, but several are adequate if cooled.

In sum, the Reference Concept is based on the assumption that the Hastelloy N will retain adequate ductility when irradiated at temperatures greater than 1300 F. This, in turn, is based on the assumption that small experimental heats having this capability will have reproducible and predictable properties when scaled-up. As previously stated, successful scale-up is likely but, as yet, undemonstrated.

A more conservative approach to MSBR design would be to adopt the limitations of the 5000 lb heats. The primary limitation is that the metal temperature during irradiation must be safely below 1200 F. It is entirely possible to design a high performance MSBR within this limitation.

2.4.2 Chemical Processing

General Conclusions

The chemistry upon which the chemical process plant is based is well established and documented.

The important equilibrium constants and distribution coefficients are large enough that the desired chemical reactions and ion exchanges can be made to occur with reasonably sized components and flow rates.

The primary uncertainties pertain to engineering and economics. Of particular importance is the design of a continuous fluorinator having a protective frozen salt film and the design of the liquid bismuth loops. Although these systems can be designed with existing data, additional experimentation and engineering data are required before the useful life or performance of these systems can be predicted.

Graphite and molybdenum are the only known materials suitable for containing liquid bismuth. Whereas ORNL considers molybdenum the better choice, it is our conclusion that graphite is more promising because of its ease of fabrication and lower cost. It is easily fabricated into simple shapes and carbon based cements or packing appear suitable for joints and seals.

Design of components such as fluorinators, extraction columns, pumps, piping, and valves has received very little consideration as yet. There appear to be no engineering or design problems which cannot be resolved.

Instrumentation and control criteria are not yet established. On-line sampling analyses will undoubtedly be necessary. Methods of analysis remain to be developed.

Little consideration has been given to safety or waste disposal. It appears that the process plant presents no potential safety hazards which cannot be protected against by proper engineering safeguards. Waste treatment and disposal methods must be engineered. This is, however, well within existing technology.

2.4.2 Chemical Processing (Cont'd)

General Conclusions (Cont'd)

It is our conclusion that sufficient data exists to permit design and construction of a demonstration chemical process plant. The data are insufficient to insure an optimum or reliable plant or to predict or warrant its performance. It is doubtful if such data will become available without the construction of a demonstration plant.

Description Summary

The function of the chemical process plant is to maintain sufficiently low concentrations of ^{233}Pa and rare earths in the fuel salt. ^{233}Pa and rare earths are therefore removed from the fuel salt by chemical processes.

The reductive extraction method of separating Pa from the rare earths has the disadvantage that it also removes uranium (U). Thus to achieve efficient removal of Pa without requiring a large feedrate of reductant, the UF_4 is first removed as UF_6 from the salt by fluorination. Next the salt stream is contacted with a bismuth stream containing 0.2 mole % metallic ^{7}Li as the reductant. Because Pa has a high distribution coefficient for bismuth relative to salt (221 at 600° C), about 93 percent of the Pa transfers to the bismuth stream. Any U which survived the fluorination process also transfers to the bismuth stream. Some of the rare earths also transfer to this bismuth stream; however, the rare earths have much smaller distribution coefficients and remain in the salt stream until they enter the next extraction column having a much higher bismuth/salt flow rate ratio. This second contactor extracts the remaining Pa and a sufficient fraction of the rare earths. The salt is then reconstituted by contacting it with UF_6 and H_2 resulting in UF_4 going into solution. It is then purified and returned to the primary system.

2.4.2 Chemical Processing (Cont'd)

Fluorination

Fluorination is required at three different places in the process: The fuel salt stream is fluorinated; ^{233}U produced by decay of ^{233}Pa in the Pa decay tank is recovered by fluorination; and U is recovered from the waste storage tank by fluorination.

Although the design of the fluorinators is unspecified in the Reference Concept, they probably will be vertical columns about 5 in. ID by 10-12 ft long. They will contain fuel salt and free fluorine at 1000-1100 F. No known structural material is compatible with this mixture, thus a protective frozen salt film is proposed. With a protective film, Hastelloy N or stainless steel probably will be suitable.

Continuous removal of U from fluoride salts has been demonstrated but with salt feed rates more than 100 times smaller than proposed in the Reference Concept. Over 99 percent of the UF_4 was removed from the salt with salt residence times as low as 28 minutes.

Ability to maintain a frozen salt film while fluorinating salt has been demonstrated. Detection of film loss has not yet been demonstrated. It appears, however, that film loss could be detected by monitoring the external wall temperature.

Remote fluorination of contaminated fuel salt has been demonstrated by the successful recovery of U from MSRE fuel salt.

It is concluded that continuous fluorination of fuel salt is technically feasible. There are no apparent reasons why continuous remote fluorination of fuel salt cannot be done by scaling up the demonstrated methods. Uncertainties exist, of course, but they pertain to the ability to predict, with confidence, the performance of a particular design. These

2.4.2 Chemical Processing (Cont'd)

Fluorination (Cont'd)

uncertainties will be resolved with additional experimentation. In the event that unforeseen difficulties arise, batch fluorination is a proven alternative.

Extractor Columns

The reductive extraction process in the salt-bismuth contactors has been demonstrated. The reported distribution coefficients are based on small scale experiments at chemical equilibrium. Although reaction rate data are sparse, it is expected that at 600° C the rates are fast enough that equilibrium data are applicable. If this proves to be true, the reaction rates will be limited by the mass transfer rates of Pa and Li between the salt and bismuth phases. Thus dispersion of the two phases is important to get sufficient contact.

To get good dispersion ORNL proposes to use columns with various packings such as Raschig rings. Using mercury (dispersed phase) and water (continuous phase) to simulate bismuth and salt, column dynamics have been studied. Enough of the data has been substantiated from actual bismuth-salt data to lend confidence to the mercury-water experiments.

The data obtained suggest that only six theoretical stages are required for a Pa removal efficiency of 93 percent. The column would be about 6 in. ID by about 10 ft long. Either graphite or molybdenum would be suitable materials of construction. Whereas ORNL considers molybdenum the better choice, we have tentatively concluded that graphite is more promising because of its ease of fabrication and lower cost.

Because of the high distribution coefficient of Pa, there is little doubt that the reductive extraction column can be made to work. As with the fluorinator, the primary uncertainty is in ability to design a column with existing data which will perform to specifications.

2.4.2 Chemical Processing (Cont'd)

Miscellaneous Components

In general, it appears that most liquid transfers can be accomplished by pressurized gas; hence, few pumps are necessary. For reasons of safety and maintenance the process plant will contain several dump tanks with walk-away cooling systems. The plant will probably be arranged for vertical (remote) access and designed for easy removal and replacement of failed parts.

The total heat production rate in the process plant due to decay of fission products and Pa amounts to roughly 7 MW - of which six appears in the Pa decay tank.

It is concluded that sufficient data to build a demonstration chemical process plant exists. There are not sufficient data to build an optimum or reliable process plant or to predict or guarantee its performance.

2.4.3 Coolant Medium

The fuel cannot transfer heat directly to steam because of

1 - The adverse consequences of a tube failure causing a large amount of high temperature, high pressure steam to enter the primary system, and

2 - The unreasonably high feedwater temperature required to prevent salt freezing.

Thus, the primary system and steam system must be separated by some intermediary coolant.

The sodium fluoroborate coolant salt is known to be compatible with Hastelloy N when essentially no water is present. The tolerable water content is not yet established but is known to be very low - less than 10 ppm. This means the steam generators must be essentially free of leaks and, should a leak occur, that loop must be shut down, drained and repaired.

2.4.3 Coolant Medium (Cont'd)

The consequences of mixing the fuel and coolant salts as a result of a failed heat exchanger tube are not well known. Although some data are available, it is not yet known how the sodium would be removed from the fuel salt or how fuel would be recovered from the coolant salt. The reductive extraction process does not remove sodium from fuel salt.

In the Reference Concept leakage of the primary heat exchanger can occur in either direction. Flow is counter current and a large fraction of the pressure drop around the primary and secondary loops occurs ocross the heat exchanger. Thus a tube failure near the fuel salt inlet would result in coolant salt leakage into the fuel salt. Provisions should exist for cleanup of either salt.

The problem is greatly simplified if leakage can be assured to be in one direction only. By pressurizing the secondary loop contamination of the coolant can be avoided.

Ideally, the coolant salt should be chemically compatible with fuel salt and steam. Leaks should cause no adverse consequences. In addition it should have good heat transfer properties, be chemically stable up to about 1300 F, be non-corrosive, and have a sufficiently low liquidus temperature that a low feedwater temperature is possible. It should also be a material which would getter tritium and prevent its leakage into the steam system. No ideal coolant exists.

The liquid metals generally suffer from compatibility problems: NaK and sodium precipitate UF_3 from fuel salt; the others are aggressive toward or dissolve most structural materials.

Many molten salts appear suitable. The choice of sodium fluoroborate is based upon its physical properties and cost. It has three disadvantages, however: Sustained leaks cannot be tolerated; it does not getter tritium; and it requires a high feedwater temperature because of its high m lting temperature. As an alternative ^7LiF-BeF_2 salts are chemically

2.4.3 Coolant Medium (Cont'd)

compatible with the fuel salt. Such salts would be permitted to leak slowly into the fuel salt. A sustained steam leak, however, still could not be tolerated because precipitation of BeO would occur. It would not help prevent tritium leakage. The liquidus of the eutectic (48 mole % LiF) is 752 F, about 27 F higher than that of sodium fluoroborate, but its viscosity is much higher. Nevertheless, these properties are satisfactory as proved by MSRE which used this salt as its coolant. ORNL rejected this salt as a coolant for the MSBR, however, because its cost.

High MP!

An inert gas (He or A) coolant satisfies all requirements except one: It has poor heat transfer properties and thus requires large amounts of pumping power. It is nevertheless feasible. As a result of its low film coefficient, it will require a greater heat transfer area and thus, a larger salt volume in the heat exchanger.

A fluidized bed for transferring heat from fuel salt to steam has potential and should be developed for MSBR's. The state of technology of fluidized beds, however, is in its infancy. As yet, no fluidized bed has been built to transfer heat from one liquid to another. Correlations for heat transfer from tubes to the bed have been developed from experimental data. Preliminary results suggest that heat transfer coefficients will be adequate. It is clear that a fluidized bed heat exchanger offers the following potential advantages: A small gas leak into the fuel salt could be tolerated indefinitely; tritium can be trapped; freeze-up problems vanish; and the feedwater temperature can be lowered and the feedwater pressure-booster pumps eliminated. A fluidized bed heat exchanger would greatly simplify the MSBR concept and improve its reliability, availability and salability.

What?

2.4.4 Tritium

The Reference Concept produces tritium in the amount of 2420 curies/day. Fifty percent is produced from the ^{6}Li (n,α) T reaction, 48 percent from the ^{7}L(n,α) T reaction, and the balance by ternary fission and the ^{19}F (n, ^{17}O) T reaction. The behavior of tritium in this environment is not well understood. Because of the high temperatures, however, it is believed that a large fraction dissolves into the Hastelloy and diffuses into the coolant salt and on to the steam system. ORNL calculations suggest that about 69 percent of the tritium produced will enter the steam system and, subsequently, be released to the environment.

It is desirable to establish an acceptable release rate for MSBR's as a design objective. This release rate should be competitive with other reactor concepts. An advanced 1000 MWe PWR having zircaloy cladding will put only about 2 curies/day into the primary coolant water. It is intended, however, that the coolant be held indefinitely so that even this relatively small amount of tritium probably will not be released to the environment at the reactor site. The tritium retained by the element will eventually be released to the environment at the fuel processing plant. This release rate for one 1000 MWe PWR amounts to about 350 curies/day.

An advanced 1000 MWe BWR having zircaloy cladding will produce tritium in the fuel at a similar rate (350 curies/day) and, hence, the release rate at the process plant will be roughly the same as a PWR. Because BWR's will not have borated water, the accumulation rate of tritium in the water is only about 0.5 curies/day based on one percent release from zircaloy cladding. (The fraction of tritium released from zircaloy cladding can vary by a factor of three for various zircaloy material.) Very little of this tritium is released to the environment from an advanced BWR, however. Blowdowns are

2.4.4 Tritium (Cont'd)

prevented and leaks are collected, scrubbed and recycled into the primary system.

Thus in order for MSR's to be competitive with BWR's, more than 99.98 percent of the tritium produced must be trapped. Since substantial fractions of the tritium enter reactor and steam cell atmospheres, it is clear that these atmospheres must be processed for tritium recovery.

Two reliable methods for preventing tritium from entering the steam system have been advanced:

1 - ORNL has proposed that a third salt loop containing "Hitec" (53 wt % KNO_3, 40 wt % $NaNO_2$, and 7 wt % $NaNO_3$) be inserted between the coolant salt and the steam system.

No proof of tritium trapping or metal compatibility

2 - The Molten Salt Group has proposed use of a fluidized bed for transferring heat from the fuel salt to the steam system (see Section 2.4.3).

The "Hitec" loop cannot replace the sodium fluoroborate loop because hitec must be isolated from fuel salt. Tritium entering the hitec loop will form OT^- which is not soluble in Hastelloy N and, hence, will not leak out. This method has the disadvantages of added cost, and a reduction in steam temperature since hitec is chemically stable up to only about 1000 F.

Of course, it is desired to drive the tritium into the off-gas system directly from the fuel salt. As yet, there is no evidence which suggests that this can be accomplished.

Because the tritium problem was not recognized until after the Reference Concept was established, this concept contains no provisions for preventing its release. More recent concepts generated by ORNL contain the hitec salt loop.

We do not consider the tritium problem to be a technological barrier to MSR's because two solutions to the problem exist.

2.4.4 Tritium (Cont'd)

Whereas the third salt loop has the two inherent disadvantages mentioned above, the fluidized bed has several inherent advantages which are not compromised by using it as a tritium trap.

2.4.5 Graphite

Fabrication

Graphite moderator elements can be fabricated in a wide variety of sizes and shapes. The technology for fabricating nuclear grade graphite elements having predictable and dependable characteristics (e g, density, grain size distribution, porosity, strength, and behavior under neutron irradiation) is well established. Since nuclear performance depends primarily upon salt fraction rather than element geometry, the element geometry should be chosen for easy fabrication, assembly and handling.

In the Reference Concept the core elements are simple enough to fabricate. Reflector blocks, however, require a modest scale-up over past experience but no extension of technology.

Dimensional Stability

The specific type of graphite adopted for the Reference Concept is not specified but is referred to simply as the Reference Graphite. Its maximum linear contraction is about 2 percent, which occurs at a neutron fluence of 1.5×10^{22} nvt. Additional exposure causes it to swell. The graphite lifetime was arbitrarily taken to be the time at which it returns to its original volume. In the Reference Concept this occurs after a neutron fluence of 3×10^{22} nvt ($E > 50$ kev), or four years of operation at a plant factor of 80 percent.

It is clear that only that graphite near core center is fully exposed. If the criteria were adopted that end of life occur when the entire graphite matrix returns to its original dimensions, the graphite would last at least five years. Substantial improvements over this, however, are not likely.

2.4.5 Graphite (Cont'd)

Fabrication (Cont'd)

The possibility of allowing the graphite to expand beyond its original dimensions is probably limited by its porosity. In addition to being impermeable to fuel salt, it should also be impermeable to xenon.

Surface Seals

ORNL assumed that the graphite would have to be sealed to maintain a low ^{135}Xe poison fraction (0.5 percent or 0.005 neutrons absorbed in ^{135}Xe per neutron absorbed in fissile isotopes). It was proposed that the graphite be sealed by a pyrolytic coating. Although such coatings can be applied to graphite, experimental results thus far indicate that it deteriorates under neutron irradiation and will not survive an exposure of 3×10^{22} nvt ($E > 50$ kev). As yet, there is little or no experimental evidence which suggests that a pyrolytic coating will last the desired exposure.

MSRE Experience

MSRE experience strongly suggests that the xenon poison fraction will be acceptably low without a surface seal. MSRE operated with a poison fraction between 0.2-0.3 percent without sealed graphite and with poorly controlled conditions of void fraction, bubble size, and bubble stripping. Evidence which suggests that the graphite must be sealed in the Reference Concept is founded on analyses based on a speculative model and constants (e g, mass transfer coefficients and solubility constants) which have large uncertainties. It is entirely possible and likely that the graphite will not require sealing or perhaps very little sealing.

If the ^{135}Xe poisoning in an MSBR proves to be substantial, several alternate possibilities exist:

2.4.5 Graphite (Cont'd)

MSRE Experience (Cont'd)

1 - The efficiency of ^{135}Xe stripping could be improved by increasing the gas purge rate or by increasing the bubble surface area via smaller bubbles.

2 - The graphite pores could be sealed by impregnation of a salt, such as ^{7}LiF.

3 - A pyrolytic seal could be used and the graphite replaced more frequently.

4 - A spray chamber for stripping xenon could be used.

Although we have not explored these alternates in detail, we have examined them sufficiently to determine that each has potential for reducing the poison fraction.

Our conclusion is that the graphite limitations do not constitute a technological barrier to successful MSBR's. The worst possibility is that the allowable neutron fluence might be about 1.5×10^{22} nvt ($E > 50$ kev) - about half of what is assumed in the Reference Concept. In this case the graphite would be replaced every two years instead of every four years. The fuel cycle cost would suffer but not seriously.

Graphite Replacement

In the Reference Concept the entire core assembly, together with the top head and bottom reflector, is removed and replaced as a unit. We consider this approach undesirable; instead we recommend replacing the graphite in smaller, more manageable quantities. Failure of the transport cask in the Reference Concept during handling would very likely be an economic calamity.

We believe, however, that small assemblies can be handled safely with less expensive equipment. Better utilization of graphite can be realized by replacing only that which cannot endure another four year exposure.

2.4.6 Reactor Physics

The calculated models and methods for estimating MSBR nuclear performance are quite adequate for conceptual design. This conclusion is based upon extensive examination of ORNL computer codes, input data, and calculated results.

The breeding ratio for the Reference Concept is reported to be 1.063. This value, however, is based upon an earlier chemical flowsheet. The flowsheet described in this report yields a breeding ratio of 1.071[1/] and an inventory of 1487 kg fissile which corresponds to a continuously compounded fissile doubling time of 19 years. The neutron balance is also somewhat different than reported. Neutron absorption by Pu isotopes are reduced to negligible levels and fission products absorb fewer neutrons. These are the reasons for the higher breeding ratio.

The total uncertainty in breeding ratio is reported[2/] to be 0.016. Eta for ^{233}U is, by far, the most significant contributor to this uncertainty. It alone contributes an uncertainty of 0.012 to the breeding ratio. Uncertainties in η, α, and υ for ^{233}U and ^{235}U yield an overall uncertainty of 0.014 in breeding ratio. Including uncertainties in cross sections of salt constituents, graphite, and fission products, the overall uncertainty was calculated to be 0.016. The uncertainties assigned to the data are, in our opinion, conservative. Thus, we consider it very unlikely that the actual breeding ratio would be outside of this range. Although these uncertainty calculations were performed for a different MSBR concept, the neutron spectrum and neutron balance for that concept and the Reference Concept are nearly identical. Thus, the results are applicable to both concepts.

1/ USAEC Report ORNL-4676, page 41, Sections by A M Perry and H F Bauman

2/ USAEC Report ORNL-TM-2157, March 8, 1968, A M Perry

2.4.7 Components

Hastelloy N

Hastelloy N has not been fabricated by suppliers of nuclear components; thus they will have to learn how to work with it.

MSRE components were fabricated almost entirely at ORNL with little difficulty. Those components performed satisfactorily. With the exception of a poorly designed freeze valve, no components failed and no leaks occurred.

Hastelloy type alloys are widely used by the chemical industry. Many large vessels have been fabricated from formed plate.

Hastelloy N is much more difficult to machine than mild steel. Nevertheless, common tools, machinery, and procedures are widely used for machining and forming it. It welds and forms easily.

Vessels

The reactor vessel is probably larger than any ever fabricated from Hastelloy. Because of its size, it will require field fabrication. The method of construction will probably be no different from that used by the chemical industry. Because this vessel is large and thin-walled (22 ft diameter, 2 in. thick), it will be flimsy and difficult to keep round.

After loading the graphite, raising the temperature to over 1000 F, and loading the fuel salt, warpage of as much as 2 in. on the diameter can be expected. The internals must, therefore, be designed to accommodate this dimensional change, otherwise some of the stand-off ridges will be crushed causing some flow restriction.

The outlet nozzles are subjected to a high temperature (1300 F) and will suffer thermal shock many times throughout the 30-year plant life. (A sudden reactor shutdown will cause the outlet temperature to drop by about 250 F in a few seconds.) Such severe conditions should be avoided by cooling and insulating the nozzles from the outlet salt.

2.4.7 Components (Cont'd)

Hastelloy N (Cont'd)

We believe that a current Reference Concept should be based on the properties of Hastelloy N which are demonstrated to be reproducible in production heats. Since 1200 F is the temperature above which proven alloys lose much of their resistance to neutron irradiation, the vessel and nozzles should be cooled to some temperature safely below 1200 F. The Reference Concept has provisions for cooling the vessel but not the outlet nozzles.

Models will be required to demonstrate satisfactory flow distributions not only in the cooling channels next to the vessel, but in the plena as well.

Primary Piping

The delayed neutron flux in the hot leg piping is low enough and the spectrum hard enough that embrittlement is unlikely even at a metal temperature of 1300 F.

In addition to carrying normal pressure and moment loads, it must have enough flexibility to accommodate thermal expansion and survive thermal shock. It should also survive seismic forces. But piping failure does not precipitate the adverse consequences which ensue in LWR's.

The pump bowls are mounted to comply with hot leg piping flexures. The heat exchangers are mounted so that the bottom ends flex to accommodate cold leg piping. The vessel diameter increases by about 2-1/2 in. when heated from room to operating temperature. Vertically the vessel grows downward by about 3 in. Adequate flexibility is, at best, marginal in the Reference Concept.

Salt Circulating Pumps

The primary and secondary salt pumps are similar and are roughly scaled-up, improved versions of MSRE pumps which performed satisfactorily. Thermal shock remains a problem

2.4.7 Components (Cont'd)

Salt Circulating Pumps (Cont'd)

of the fuel salt pumps. The pump housing could be cooled and insulated from the 1300 F salt. The impeller cannot be protected but is accessible for replacement as are seals and bearings. Successful experience with MSRE affords confidence that reliable MSBR pumps can be built within present technology.

Primary Heat Exchangers

To prevent excessive fuel salt inventory, small tubes (3/8 in. OD) were chosen. No manufacturer of components for nuclear systems has ever built an IHX with such small tubes and is not now tooled-up to do so. There is no technical reason why this capability cannot be developed within a reasonable period of time.

The smaller, lighter tubes are more likely to vibrate. Although analytical methods for vibration analysis are available, only a demonstration plant (with full-length tubes and the actual salts at operating temperature) will prove a design.

The delayed neutron flux is low enough that embrittlement of Hastelloy N (Modified) is unlikely even at temperatures over 1200 F. The hot tubesheet must be designed to withstand severe thermal shock and high thermal stress.

Heat transfer correlations are based on the analytical model by Dittus-Boelter and MSRE data. Because the viscosity of sodium fluoroborate and fuel salt is a sensitive function of temperature, entrance effects persist throughout the tube length. Hence heat transfer calculations are more uncertain than with conventional fluids. The smaller tubes and use of sodium fluoroborate are significant departures from the MSRE design. Since MSRE calculations erred by about 20 percent and the MSBR design introduces new uncertainties, we believe that the uncertainty in heat transfer coefficient of the MSBR is about 20 percent.

2.4.8 Maintenance and Repair

Maintenance and repair are two of the principal uncertainties in MSR technology. To insure successful maintenance and repair, it is necessary to design contaminated systems for remote access, to identify all such operations deemed conceivable, and to delineate the necessary tools and procedures. The plant design must be compatible with these tools and procedures.

MSRE was successfully maintained. It was arranged for vertical access to the entire primary system. Access was gained by removing portable concrete shielding blocks and cutting through an air-tight liner enclosing the primary system. Piping was sloped for complete drainage. A portable work shield with windows together with long-handled tools provided adequate shielding and permitted visual inspection as well as mechanical access.

This arrangement worked satisfactorily for MSRE and a similar arrangement is proposed for the MSBR Reference Concept. The primary differences between MSRE and MSBR are the radiation levels and the physical size of piping and components.

Radiation levels at pipe surfaces will be at least ten times larger. It appears that the additional shielding requirements can be built into the work shield.

The larger pipes and components will require powered tools for manipulation of equipment. Remote cutting, welding, and inspection devices will be required if work is done on piping.

The design philosophy is to build contaminated systems conservatively with sufficient quality control that the need for repair or replacement of permanent items (e g, reactor vessel, piping, pump housing, IHX shells, etc) is very unlikely. Such repair, however, should be possible. Items such as graphite, IHX tube bundles, pump impellers, seals, and bearings should be easily accessible for replacement.

2.4.8 Maintenance and Repair (Cont'd)

It is our opinion that a good design which is compatible with maintenance and repair procedures can be maintained and repaired without undue risk of prolonged outage or expense. Of course, earthquakes and accidents can be postulated which constitute economic calamity. We believe the probability of such events can be made acceptably low. !!

2.4.9 Safety

Analyses of the kinetic response of the Reference Concept to reactivity insertions show that it is difficult if not impossible to cause a nuclear excursion which constitutes a threat to the public or plant personnel. The reasons for this result are as follows:

1 - Large sources of excess reactivity are not available.

2 - The large prompt negative temperature reactivity coefficient of the fuel salt quickly terminates an excursion.

3 - The large heat capacity of the graphite absorbs the energy released.

4 - The physical properties of the salt and graphite remain approximately constant over a wide temperature range. Thus pressure surges, chemical reactions, or phase changes are not credible even with extreme temperature excursions.

Generally, MSR safety questions are based on postulated mechanisms which could cause loss of control of fuel salt and/or fission products. Because of the continuous processing, the fission product inventory in the fuel salt is at least an order of magnitude smaller than in LWR's. Although separated from the fuel, these fission products are still on site. Most of the short-lived fission products reside in the fuel salt or in the purge gas in the drain tank. Most of the long-lived fission products reside in

2.4.9 Safety (Cont'd)

the charcoal decay beds (fission gases) in the off-gas system, or in the chemical process plant (fission products with volatile fluorides or those soluble in bismuth), or deposited on surfaces (noble metal fission products or those with insoluble stable fluorides).

A fuel salt spill will cause no safety problem provided a catch pan and drain tank with adequate cooling is operable and the containment is not breached. Most of the fission products will remain in the salt. Those that do not will be in an inert atmosphere which can be purged or on surfaces which could be cleaned, if necessary. The same can be said for a spill in the chemical process plant. Walk-away cooling systems with redundant circulating loops assure that the salt is maintained safety in the drain tanks.

During normal operation the drain tank contains 2-3 x 10^8 curies of fission gas which generate about 9 MWt. Although this activity level decays to about one-tenth of its full power, steady state level ten minutes after shutdown, these gases constitute a potential hazard. To safeguard against their release, redundant containment barriers are provided.

We have not examined all the hypothetical safety problems nor have we identified the maximum credible accident. We believe, however, that MSBR's can be made sufficiently safe.

3.0 CONCEPTUAL DESCRIPTION OF A 1000 MWe MSBR

The specific MSBR concept selected for evaluation was defined by ORNL together with the Molten Salt Group (MSG). Because of the many systems within an MSBR power plant and because many alternate systems had been put forward by ORNL, it was necessary to make choices to define a Reference Concept. The MSG's understanding of this Reference Concept was documented and submitted to ORNL for their comment. Subsequently, ORNL and the MSG agreed on a concept description which was mutually acceptable as a Reference Concept. This concept satisfied the criteria that it be a moderately high performance breeder reactor which does not require too great an extension of known technology. The description agreed region, with very minor revisions, is presented in the remainder of Section 3.0. The following description is, wherever possible, identical to that put forward by ORNL[1/].

3.1 General Description

The reference MSBR has a plant capacity of 2250 Mw(t), a net electrical output of 1000 Mw(e), giving a net thermal efficiency of 44.4 percent and a net heat rate of 7690 Btu/kwhr. The breeding ratio is 1.063, corresponding to a fissile yield of 3.2 percent per year.

The site assumed for the MSBR station is the standard AEC site described in Reference 2. This site consists of grass-covered level terrain adjacent to a river which has adequate cooling water conditions to maintain an average 1-1/2 in. Hg abs back-pressure for the turbine. The ground elevation is about 15 ft above the mean river level. A limestone formation about 30 ft thick has its top about 8 ft below grade and has a bearing capacity of 18,000 psf.

The general layout of the site is shown in Figure 3.1. Intake and discharge structures for cooling water, a deep well, water purification plant and water storage tank are provided. The

1/ USAEC Report ORNL-4541, "Conceptual Design Study of a Single-Fluid Molten Salt Breeder Reactor", by Molten Salt Reactor Program Staff, June 1971.

3.1 General Description (Cont'd)

standard site assumes the electrical distribution system to be single-source transmission and the electric switchyard is adjacent to the plant. The usual services are provided, including a waste treatment plant for the sanitary discharge. A railway spur serves for transportation of heavy equipment.

Seismic disturbances in the area have ranged 4 to 6 on the Mercalli scale (equivalent to about 0.007 g to 0.07 g horizontal ground acceleration) and the site has been designated as Zone I (an area normally below the threshold of damage). The site is assumed to have a sufficient frequency of tornado occurrences to require Class I structure design.

The site location is satisfactory with respect to population centers, meteorological conditions, frequency and intensity of earthquakes, thermal pollution and other environmental factors such that no special design conditions or costs are imposed other than those normally expected to meet licensing requirements.

The plant consists of three major systems; the reactor system, the intermediate or secondary salt circulating system, and the steam power system.

The schematic flow diagram for the MSBR station based on a full load output of 1000 Mw(e) is shown on Figure 3.2, and the principle design and performance data are listed in Tables 3.1-3.22.

Plan and elevation layout drawings for the station are shown in Figures 3.3 and 3.4. The principal structures are the circular reactor building, the steam-generator bay, the steam piping and feedwater heater bay, and the turbine-generator bay. The reactor and steam-generator facilities are located on one reinforced concrete pad and the remaining structures on another.

3.2 Primary System

The primary system consists of the reactor vessel, fuel salt circulating pumps, the primary heat exchangers, and the connecting

3.2 Primary System (Cont'd)

piping. Figure 3.5 shows the primary system connected with the drain tank system, the chemical process plant, and the purge-gas system. The primary system is located inside the Reactor Building.

A cross sectional elevation of the primary fluid fuel system is shown in Figure 3.6 and a plan view of the reactor is shown in Figure 3.7. These figures also show the steam cells.

The core is graphite-moderated and reflected and operates on the Th-^{233}U cycle. Both the fissile and fertile materials are in the form of fluoride salts contained in a single circulating salt mixture having the composition $^{7}LiF-BeF_2-ThF_4-UF_4$ (71.7-16-12-0.3 mole percent).

The reactor uses graphite having low porosity and a special surface impregnation to reduce the graphite permeability to xenon and other gases. The reactor also has graphite control rods which displace fuel salt. The graphite lifetime corresponds to a neutron exposure of 3×10^{22} neutrons/cm^2 ($E \geq 50$ kev) at 700° C (1292 F). The reactor design conditions are such that the core graphite must be replaced after about four years of operation. The reactor vessel is designed for top access, and the core can be removed as an assembly by means of a special transport cask. Provisions are made for storing spent graphite and other solid radioactive wastes in a waste cell beneath the reactor.

The reactor vessel is 22 ft 6-1/2 in. in diameter and 30 ft high, as shown in Figures 3.8 and 3.9. It is designed for 75 psig with 2 in. thick walls and 3 in. thick dished heads at the top and bottom. Salt flows at the rate of 94.8×10^6 lb/hr and enters the bottom manifold at 1050 F through four 16 in. diameter nozzles. It flows through the lower plenum and upward through the flow channels in the graphite elements (Figure 3.2 Ref "A") and exists at the top at 1300 F through four equally spaced nozzles. The nozzles connect to the 21 in. diameter salt suction lines leading to the circulating pumps. A 6 in. diameter fuel salt drain line connects the bottom of the reactor vessel inlet manifold to the drain tank.

3.2 Primary System (Cont'd)

The top head is flanged to facilitate removal for core replacement. This flange is located several feet above the dished section to provide it with a lower temperature and fluence environment. The reactor vessel is designed to last the 30 year life of the plant and hence is not designed for replacement. The radial reflector graphite is mounted permanently inside and on the walls of the cylindrical vessel, and this graphite is also designed to last the full life of the plant and is not replaceable. All other graphite (the core pieces and the axial reflector slabs) are removed with the top head when the core is replaced approximately every four years. There are two reactor top head assemblies which are used alternately. The upper axial graphite reflector pieces are attached to the top heads and do not have to be replaced. The lower axial reflector pieces, along with the internal core support plate, are part of the removable core and are renewed each time the core structure is replaced.

Figure 3.10 shows a typical moderator element which is used in regions I-A and I-B of Zone I, which makes up most of the core volume. Each element is an extruded graphite element approximately 4 in. by 4 in. by about 15 ft long. Both ends of the graphite elements are turned into a cylindrical shape for a distance of several inches, to increase the salt fraction from 13 percent (in the core) to 85 percent at the top end. This provides the outlet salt plenum which is three inches deep. It also provides an undermoderated region which reduces the axial leakage from the core. The more detailed cross section of the extrusion, shown in Figure 3.11, shows the corner ribs which define salt flow passages around the element. The ribs of one element contact flat areas on adjacent elements to produce a compact graphite array which, with the fuel salt, make-up the core of the reactor. Flowing salt in the central and interstitial flow channels cools the graphite to a peak temperature of about 700° C.

3.2 Primary System (Cont'd)

The central hole in the Zone I-A type elements is 0.60 in. in diameter whereas the interstitial flow channels are 0.302 in. thick by about 2.88 in. wide. These flow areas, plus the small open corners, provide a salt fraction of 13 percent in the zone. In Zone I-B the salt fraction is also 13 percent, but the center hole is larger and the interstitial flow areas are smaller. This element is used where the power density in lower and, thus, the required salt velocity is lower. The center hole is orificed at the top for outlet temperature control. The interstitial flow passages are not orificed. Buoyancy and drag forces push the elements upward against the upper reflector.

In addition to the 37 percent salt fraction regions at the top and bottom of the core, there is a Zone II region of 37 percent salt surrounding the core radially. This zone has two forms of graphite. One of these is made up of a single row of elements except that the center hold is much larger as shown in Figure 3.12, and the interstitial flow channels are relatively small. Figure 3.13 is a plan showing a segment of the radial part of Zone II, the 100 percent salt-filled annulus outside the core, and the radial reflector blocks. The annulus is provided primarily for easy insertion of the removable core and to reduce the damage flux incident upon the surface of the reflector blocks. Most of the Zone II is made up of radial slabs of graphite about 2 in. thick and having an average width of about 10-1/2 in. These slabs are arranged in a vertical array surrounding the octagonal core. The width of the slabs is such as to transform the octagonal periphery of the core into a cylindrical shape. The slabs are separated from each other by graphite buttons located at approximately 18 in. intervals in the length of the slab. Each slab has a key ring on each side running axially about 1-1/2 in. from the outside edge. Long elliptical graphite dowels are inserted between adjacent slabs into these grooves which isolate, hydraulically, the flow between the slab from the flow in the 2 in. annulus. There are similar

3.2 Primary System (Cont'd)

elliptical dowels running axially between bars of the outer rows of the core. These dowels perform the same function as do those in the vertical slabs in that they provide hydraulic isolations between the flow in the Zone I (core 13 percent salt) and the flow in Zone II (37 percent salt fraction).

A graphite reflector surrounds the core to protect the vessel wall from radiation damage and four neutron economy. The radial reflector is 2-1/2 ft thick and is made up of blocks of graphite slightly wedge-shaped in cross section. These blocks which are 4 ft 4 in. high by 10 in. wide at the vessel wall and about 9 in. wide at the inner end. The graphite blocks are not sealed to reduce xenon penetration but are sealed against salt penetration.

After exiting from four radial nozzles at the top of the reactor vessel, the salt enters the bottom of the four fuel salt circulating pumps (refer to Figure 3.2 point "B").

The layout of the primary salt pump is shown in Figure 3.14. The lower portion of the pump (pump tank, impeller, casing, etc) is located in the reactor cell and the drive motor is located on the crane bay floor, i e, above the concrete shielding. The bearing housing is recessed into the concrete shielding to reduce the shaft overhang. The pump shaft is mounted on two pairs of pre-loaded oil-lubricated ball bearings.

These centrifugal pumps force the salt through the tubes of the four primary heat exchangers, "C", where the fuel salt is cooled to 1050 F before returning to the bottom of the reactor.

The primary heat exchanger used to transfer the heat from the fuel salt to the sodium fluoroborate coolant salt are vertically mounted single pass shell-and-tube type heat exchangers.

The units are approximately 6 ft in diameter and 22 ft high, and the tubes are 3/8 in. OD. A cross section drawing is shown on Figure 3.15. Each of the fuel salt circulating pumps discharges about 10 percent of the total flow into a circuit from which xenon laden bubbles are extracted and fresh bubbles are injected.

3.2 Primary System (Cont'd)

A schematic flow diagram for the off-gas system is shown in Figure 3.16. This loop contains a gas bubble injection section where a helium sparging gas is introduced as small bubbles. The helium also serves as a cover gas for the fuel salt.

A design xenon poison fraction of 0.5 percent is achieved by the circulating helium bubbles which are 0.020 in. diameter maintaining the average void fraction in the fuel loop at 0.2 percent, bypassing 10 percent of the fuel salt from the pump discharge through a bubble separator to remove the xenon-containing bubbles, the generating fresh helium bubbles in the bubble generator for replenishment of helium bubbles in the pump suction. The average residence time of a bubble in the fuel loop is 10 circuits.

Figure 3.16 shows a schematic of the MSBR bubble removal and generation equipment installed in a bypass stream around the fuel pump. The pump head is in excess of that needed to operate the system; therefore, three load orifices are required. The load orifice downstream of the bubble generator is sized so that the generator will induct helium from a 5 psig supply. The load orifice between the separator and generator is sized such that the pressure in the center of the separator, when no gas is present, is sufficient to pump salt through the takeoff line and into the pump bowl. When gas is present at normal operating conditions, the gas core will build up to about 2 in. in diameter and the pressure will rise. The load orifice upstream of the bubble separator is provided to take up the excess head.

A venturi device was selected for the bubble generator in which gas is injected into the venturi throat and bubbles are generated by the fluid turbulence in the diffuser section.

The bubble generator is shown schematically in Figure 3.16. The generator consists of a system of linear venturies formed by arranging hydrofoils in parallel. The throat width is 0.08 in.

3.2 Primary System (Cont'd)

and the fluid velocity through the throat is 40 ft/sec. A cross section of a single hydrofoil is also shown in Figure 3.17. The helium channel is shown as a "controlled crack", that is, one of the mating surfaces is roughened in such a manner that when the two surfaces bear against each other, a crack of 0.001 in. controlled dimension is formed through which the helium flow can be regulated. The helium channel dimension is kept small to reduce the likelihood that a pressure surge in the salt system could push salt into the channel and plug it. Since the fuel salt does not wet Hastelloy N, a considerable pressure would be required to force the salt into a 0.001 in. wide opening.

Bubble removal is accomplished by swirl vanes which rotate the fuel salt and develop centrifugal force, causing the bubbles to migrate to the gas-filled core at the center of the pipe. The gas-flows down the core and into the takeoff line which is located in the hub of the recovery vanes. The recovery vanes straighten out the fuel salt and recover some of its energy.

The off-gas contains gaseous fission products, principally xenon, volatile fluorides, tritium, and particulates consisting of corrosion products and noble metals.

The removed gases, along with a small amount of entrained salt, are taken to a small tank where the off-gas is combined with that purged from the pump bowls and from the annulus at the top of the reactor. The off-gas line leaving this tank is cooled by a jacket in which there is a flow of 1050 F fuel salt taken from the reactor drain line just upstream of the freeze valve. This relatively small flow of fuel salt, which is subsequently returned to the pump bowl, assures an open line between the drain valve and the reactor vessel.

Drain Tank System

Each fuel salt pump bowl overflows about 150 gpm through the small tank and this fluid flows with the off-gas to the fuel salt drain tank. The overflow arrangement helps cool the drain tank head

3.2 Primary System (Cont'd)

Drain Tank System (Cont'd)

and walls. Salt-operated jet pumps at the bottom of the drain tank continuously return the molten salt to the circulating systems. The drain tank is provided with afterheat removal capacity.

The purge-gas is held up in the fuel salt drain tank for about two hours. It is expected that most of the noble metal which enter the drain tank will deposit on the internal surfaces. The gases flow from the drain tank through particle traps where remaining particulates are removed before the gases enter the charcoal beds for adsorption of xenon, and other fission product gases. About 20 percent of the gases leaving the charcoal beds enter the long delay holdup (about 90-day) charcoal bed, the outflow of which passes through tritium and drypton traps before entering a gas storage tank. This tank supplies highly decontaminated helium for purging pump seals and other places where backflow of contaminated gas is undesirable. The accumulated krypton and tritium are stored in tanks in the waste cell facility. The rest of the gases from the 47-hour holdup charcoal bed are compressed for reintroduction into the circulating system at the bubble generator.

The MSBR drain system consists of the drain tank, drain line and freeze valve, a pump and jet system to return salt to the circulating loop or to fuel processing, off-gas heat disposal system, afterheat disposal system, and heater equipment which maintains the salt above its liquidus temperature. The drain system is housed in separate cells apart from the reactor cell. A section view of the drain tank and cells is shown on Figure 3.18.

The fuel salt drain tank is surrounded by an open-topped stainless steel vessel about 14-3/4 ft in diameter and with a 3-4 in. thick wall provided with two autonomous internal cooling channels for circulation of NaK. The outside tank serves as a backup in event

3.2 Primary System (Cont'd)

Drain Tank System (Cont'd)

a salt leak develops in the drain tank and also as a gamma shield. Heat transfer by radiation across the 3 in. wide annular space between the vessels cools the walls and lower head of the drain tank. In event of a major leak of fuel salt into the external vessel, the NaK circulating through its walls would provide the necessary cooling. The outer surface of the drain tank and the surfaces of the backup vessel are accessible for in-service inspection.

Heat generation in the drain tank due to fission product decay of off-gases and entrained particulates is removed by 1028 Hastelloy-N thimbles extending vertically downward into the tank. Each 2 in. ID thimble contains a concentric croloy (or stainless steel) bayonet tube in which eutectic NaK circulates by natural convection to a bank of NaK-filled tubes inserted in horizontal tubes which are immersed in a pool of water at an elevation about 60 ft above the drain tank. The arrangement provides a double barrier between the fuel salt and the NaK and between the NaK and the water.

The NaK cooling system is arranged with several autonomous circulating loops. An electromagnetic pump (acting as a brake) is installed in each of the NaK circuits to retard or stop the NaK natural circulation as necessary to protect against freezing of the fuel salt in the drain tank.

The fuel salt drain tank is connected to the bottom of the reactor vessel by a drain line having a freeze-plug type of "valve". At the discretion of the plant operator, the plug can be thawed in a few minutes to allow gravity drain of salt from the system into the drain tank. The freeze plug also thaws in event of a major loss of electric power or failure of the plug cooling system. The drain system is provided primarily for safe storage of salt during maintenance operations. Although drainage is a positive reactor shutdown mechanism, it is not intended to be used as an emergency procedure.

3.2 Primary System (Cont'd)

Drain Tank System (Cont'd)

A catch basin is provided at the bottom of the heated reactor cell in the unlikely event of a major spill of fuel salt from the system. The basin pitches toward a drain which is connected to the fuel salt drain tank as a convenience for recovery of the salt.

A fuel salt storage tank is provided in addition to the drain tank in event the latter requires maintenance. The heat removal system for the storage tank has less stringent requirements and consists of an external coolant system cooled by conduction and radiation. A jet pump in this tank is used to return the fuel salt to the circulating system or to the drain tank.

Fuel salt of the appropriate composition to maintain the desired reactivity is reconstituted from the fully processed salt by contacting the salt with UF_6 and hydrogen to produce UF_4 in the salt and HF gas and by making appropriate adjustments to the ThF_4, LiF and BeF_2 concentrations.

If there were an extended interruption of the salt processing, there would be only a small diminution in the performance characteristics and the plant could continue to generate power.

All portions of the systems in contact with the fuel and coolant salts excluding the processing plant are fabricated of Hastelloy N having less than 0.001 wt percent boron and containing additions of one or more of the elements, titanium, hafnium and niobium to improve resistance to radiation damage.

The Hastelloy N will not require replacement during the 30-year useful life of the plant, except for that metal which is periodically replaced along with the graphite.

The reactor, primary heat exchangers and fuel salt pumps are housed in a double-walled reactor cell about 68 ft ID x 30 ft high. This cell is sealed within a domed cylindrical reactor building, 134 ft in diameter by 189 ft high. The cylindrical portion of the reactor building is shown in the elevation drawing

3.2 Primary System (Cont'd)

Drain Tank System (Cont'd)

Figure 3.19. Plan views at three major levels are shown in Figure 3.20 (crane bay), Figure 3.21 (upper level) and Figure 3.22 (lower level).

The reactor building serves as containment and biological shielding during maintenance operations. It also provides tornado and missile protection. All portions of the systems containing radioactive materials have at least double containment and all are mounted on a common monolithic concrete pad for seismic protection.

Most cells containing the fuel and coolant salts have inert atmospheres and are heated to about 1000 F by externally replaceable electric resistance heaters maintaining the cell temperatures above the freezing points of the salts at all times. The cell walls are insulated and cooled to prevent excessive concrete temperatures.

Replacement of the reactor core assembly requires the use of special maintenance equipment. The major item being a 20 ft diam x 40 ft high shielded transport cask for the reactor core assembly. As shown in Figure 3.23, the cask is an integral part of a polar crane which can be rotated to cover all points in the reactor building. The cask moves laterally but not vertically, and has a 240 ton capacity remotely-controlled hoisting mechanism on top to draw the core assembly up into the cask.

A domed maintenance containment vessel is permanently installed over the top of the reactor cell. It is thin-walled and designed to contain airborne contaminants during maintenance operations. It is provided with access ports over the fuel salt pumps, heat exchanger and a shield plug covering the reactor vessel.

3.3 Secondary Salt Circulating System

The coolant salt circulating system consists of four independent loops each containing a salt circulating pump, four steam generators, two reheaters, coolant salt piping and the shell side of the

3.3 Secondary Salt Circulating System (Cont'd)

primary heat exchangers. All of this equipment is located in the steam generator cells and the coolant salt storage tanks are located in a cell directly beneath the steam generator cell.

The coolant salt is molten sodium fluoroborate with the composition $NaBF_4$-NaF_2, 92-8 mole percent, which is circulated at a rate of about 71.2 x 10^6 lb/hr, as indicated on the flowsheet, Figure 3.2. The coolant enters the shell side of the primary heat exchangers, "C", at 850 F and leaves at 1150 F. Each of the four coolant salt pumps, "K", circulates the coolant through four steam generators, "L", and two steam reheaters, "M", with the flow proportioned so that outlet steam temperatures of 1000 F are obtained from each. The coolant salt pumps can be operated at variable speed during transients and to adjust the steady-state speed as a function of the station load.

The design conditions for the primary and secondary salt pumps are such that the same impeller and casing design can be used for both. The secondary pump will, however, operate at a higher speed. Except for the drive motor and the pump tank, the two pump designs are practically identical.

The secondary coolant system piping connects the primary heat exchangers in the reactor cell with the coolant pumps and steam generators and reheaters in the steam generating cells. The main piping is 22 in. diam, with branches as small as 12 in. in diameter.

Sixteen once-thru steam generator units are proposed. Each unit is a counterflow U-shell, U-tube heat exchanger mounted horizontally with one leg above the other. Both shell and tubes are fabricated of Hastelloy N. There are 393 tubes per unit, each 1/2 in. OD, and having a tube-sheet-to-tube-sheet length of about 76 ft. The coolant salt circulates in counterflow through segmental baffles in the shell to improve the heat transfer coefficient for the

3.3 Secondary Salt Circulating System (Cont'd)

salt film and to minimize salt stratification. A baffle on the shell side of each tube sheet provides a stagnant layer of salt to help reduce stresses due to temperature gradients across the tube sheets.

A rupture disk will be located at the secondary salt outlet of each steam generator to provide a pressure relief system to prevent overpressurization in the event of a failure in the barrier between the coolant salt and the steam system.

The steam reheater is a 22 in. diam x 30 ft long, horizontal, straight tube, single-pass, shell-and-tube heat exchanger. There are 400 tubes, 3/4 in. OD in a triangular pitch array.

The coolant salt is in counterflow through the disc-and-doughnut baffles on the sheel side. The steam reheaters operate in parallel both in respect to the coolant salt and steam flow. The coolant salt enters at 1150 F and leaves at 850 F.

Four 2100 ft^3 drain tanks, arranged in series, will be used to store the coolant salt when it is drained from the system, or prior to filling the system. The drain tank cells are heated to 800 F by electric resistance heaters to maintain the salt above its melting point.

Freeze valves are used to connect the first of the coolant salt storage tanks to the cold leg of the coolant salt criculating loops. When the freeze valves are thawed, the bulk of the salt in the coolant system will drain by gravity, but 730 ft^3 in each of the primary heat exchanger shells will not, and must be removed by gas pressurization of the shell. Each heat exchanger is provided with a 1-in. dip line for this purpose.

3.4 Steam Power System

The steam power system consists of a single 1035 Mw(e) gross electrical capacity turbine generator unit, the condensing system, condensate polishing and regenerative feedwater heating

3.4 Steam Power System (Cont'd)

systems, steam-turbine-driven main feedwater pumps, the feedwater and reheat steam preheating equipment, and the associated controls, switchgear, station output transformers, etc. All the steam power system equipment, with the exception of the feedwater booster pump and reheat steam preheating facilities, is conventional in present day power stations.

Superheated steam leaves the once-through type steam generators at about 3600 psia and 1000 F at a rate of about 10×10^6 lb/hr. A steam attemperator, or desuperheater, supplied with 700 F feedwater, assists in holding the steam temperature to within tolerances. Steam at the rate of 2.9×10^6 lb/hr, leaving the steam generator is diverted for the last stage of feedwater heating; the remainder enters the 3600-rpm high-pressure turbine throttle valve at 3500 psia and 1000 F. After expansion to 1146 psia in the turbine, 1.5×10^6 lb/hr is extracted to drive the main boiler feedwater pump turbines, and for the final stage of regenerative feedwater heating. The remainder of the steam in the high-pressure turbine expands to about 600 psia and 552 F before exhausting into the two 34 in. diam cold reheat mains leading to the reheat steam preheater. A portion of this exhaust steam is also used for feedwater heating in the No. 2 heaters.

The minimum temperature for the steam entering the reheaters is 650 F; therefore, the 552 F high-pressure turbine exhaust steam is preheated, or tempered, in the shell side of a surface heat exchanger using prime steam at 3600 psia and 1000 F in the tubes.

The eight identical preheater units operate in parallel. The units are vertical, single pass, U-shell, U-tube, with an overall height of about 15 ft. The legs of the shell are about 21 in. in diameter and are surmounted by 25 in. ID spherical plenum chambers for the supercritical-pressure heating steam. Each unit has about 600 tubes, 3/8 in. OD, located in a triangular array. There are no flow

3.4 Steam Power System (Cont'd)

baffles used on the shell side, but bypass preventer rings are installed at intervals around the tube bundle to prevent channeling of flow in the clearance space between the bundled and the shell. A baffle plate on the shell side of each tube sheet provides a stagnant layer to help reduce stresses due to the temperature gradient across the sheet.

The high-pressure steam leaves the tubes at about 3500 psia and 866 F and is used for preheating the feedwater, as described below. The preheated "cold" reheat steam, now at 650 F, then enters eight reheaters, which are supplied with coolant salt at 1125 F at a controlled rate to provide 1000 F steam at the exit. The hot reheat is supplied to the double-flow 3600 rpm intermediate-pressure turbine stop valve at about 540 psia and 1000 F.

There are no extraction points on the intermediate-pressure turbine. Each cylinder exhausts directly into the two double-flow 1800 rpm low-pressure turbines at a rate of about 2.5×10^6 lb/hr per turbine. Steam for the No. 4 feedwater heaters is also taken from the intermediate-pressure turbine exhaust.

Each of the four low-pressure turbine cylinders has three extraction points for feedwater heating. About 2.1×10^6 lb/hr is finally exhausted from each pair of low-pressure turbines into four surface condensers operating at about 1-1/2 in. Hg abs. Hot well pumps move the 92 F condensate through full-flow demineralizers for condensate polishing leading to the high purity water required in a once-through steam generator. The feedwater flow then splits into two parallel paths for successive stages of feedwater heating and deaeration. Booster pumps at the bottom of the deaerators circulate the water through feedwater heater No. 4 and to the two main boiler feed pumps. These barrel-type 6-stage centrifugal units have a capacity of 7500 gpm at 10,800 ft of head. Each is driven by an 8-stage steam turbine with a brake horsepower capacity of 21,500 hp. The turbines have three extraction points for feedwater heating and exhaust at 77 psia into the deaerating feedwater

3.4 Steam Power System (Cont'd)

heaters. The turbines normally operate on 1146 psia steam extracted from the main high-pressure turbine but can also accept 3500 psia steam during startup or other times when extraction steam is not available from the high-pressure turbine.

The feedwater, at a pressure in excess of 3800 psia, flows through the three top regenerative heaters and leaves at 3500 psia and 551 F. Each of the 3.6×10^6 lb/hr parallel-flow stream then enters a mixing chamber where the steam at 3500 psia and 866 F from the tube side of the reheat steam preheater is mixed directly with it. The resulting mixture of compressed water at about 3475 psia and 695 F, then enters the two motor driven canned rotor centrifugal boiler feedwater pressure-booster pumps.

The feedwater, at about 3800 psia and 700 F, is return to the steam generator at a rate adjusted to the plant load by controlling the pumping rate.

The gross capacity requirement for the plant of 1035 Mw(e) is based on an assumed plant auxiliary electric load of 35 Mw(e), of which 10 Mw(e) would be required to drive the boiler feed pressure-booster pumps. The reactor plant will need to supply about 2225 Mw(t) of energy to the steam power cycle to deliver this output. Heat losses from the reactor plant, exclusive of long-range decay heat in off-gases, etc, have been estimated at 25 Mw(t).

Based on a net output of the plant of 1000 Mw(e) and a reactor capacity of 2250 Mw(t), the overall thermal efficiency of the station is 44.4 percent.

The equipment necessary for startup, hot standby and heat rejection is also included in the steam system. Briefly, this consists of an auxiliary startup oil-fired boiler which can deliver supercritical pressure steam at 1000 F, an associated auxiliary boiler feed pump, a desuperheater, a steam dryer, and various throttling and letdown valves.

3.4 Steam Power System (Cont'd)

As shown in Figures 3.3 and 3.4, there are three buildings, or bays, associated with the steam power system: (1) the feedwater heater and steam piping bay, 112 x 257 x 154 ft high, (2) the turbine-generator building, 133 X 257 x 124 ft high, and (3) an unloading and equipment setdown area, about 50 x 257 x 75 ft high.

These buildings will be of steel frame construction, with steel roof trusses, precast concrete roof slabs, concrete floors with steel gratings as required, and insulated aluminum or steel panel walls.

3.5 Chemical Processing System

The principal objectives of the chemical processing system are the isolation of protactinium-233 (Pa) from regions of high neutron flux during its decay to uranium-233 (U), and the removal of fission products, corrosion products and other impurities arising during normal operation of the primary salt loop. The chemical processing system is an integral part of the reactor system and is operated continuously.

The chemical processing system, shown in Figure 3.24, can be divided into nine functional areas which are described in the following paragraphs.

3.5.1 Uranium Removal

A portion of the circulating fuel salt from the Molten Salt Reactor is reacted with fluorine gas in a fluorination reactor.

About 99 percent of the UF_4 is removed from the fuel salt stream. The volatile UF_6 stream from the fluorinator is processed in a UF_6 recovery plant to remove volatile fission products. The decontaminated UF_6 is recovered from the recirculating fluorine gas by a series of cold traps.

3.5.2 Protactinium Extraction

The fuel salt leaving the fluorinator is essentially free of uranium, but contains all the protactinium at reactor concentration. This stream is processed in extractor (A) where it is contacted countercurrently at 640° C with a small amount of liquid bismuth containing 0.2 mole percent lithium.

The PaF_4 in the salt is reduced to protactinium metal which is then soluble in the bismuth phase leaving the extractor (A). Any UF_4 that remains in the salt leaving the fluorinator also is reduced in the same manner as the PaF_4 and transfers to the bismuth stream along with the Pa. The salt phase leaving the extractor (A) is free of protactinium and uranium but contains the rare earth fission products.

3.5.3 Rare Earth Removal

The salt containing the rare earth fission products (divalent and trivalent) is countercurrently contacted at 640° C in extractor (B) with a recycle liquid bismuth stream containing 0.2 mole percent lithium. These rare earth fission products are reduced to the metal phase by lithium and then become soluble in the bismuth phase leaving the extractor (B). A very small portion of this bismuth stream is routed to the protactinium extraction (A). The major portion of this bismuth stream is routed to the Rare Earth Transfer extractor (C). The salt stream leaving the rare earth extractor (B) is conveyed to a fuel salt reconstitution section. A very small portion of this salt stream is purged from the system.

3.5.4 Fuel Salt Reconstitution

The purified fuel salt is void of uranium and protactinium, has most of the fission product poisons removed, requires the addition of thorium and beryllium fluorides to bring the salt back to its preferred composition, requires the

3.5.4 Fuel Salt Reconstitution (Cont'd)

adjustment of the UF_4/UF_3 ratio, and must be treated to remove potentially harmful impurities such as busmuth, nickel and iron fluorides.

In the first step, the UF_6 from the UF_6 recovery sections is dissolved into the purified fuel salt. Hydrogen, at about 600° C, is then added to the chemical reactor to effect the required reduction.

The salt stream leaving the reduction chemical reactor must have the UF_4/UF_3 ratio readjusted by the addition of a hydrogen-hydrogen fluoride stream, at about 600° C, to a special salt purification reactor containing nickel gauze packing.

The bismuth entrained and/or dissolved in the salt is trapped by forming a busmuth-nickel intermetallic compound on the nickel gauze packing.

Since the salt is deficient in both thorium fluoride and beryllium fluoride, these compounds are added to bring the salt compositions up to the desired value. The purified salt stream is passed through a porous metal filter prior to its return to the reactor.

3.5.5 Rare Earth Transfer

The major portion of the bismuth stream from the rare earth extractor (B) is contacted with lithium chloride in extractor (C). In this extractor at 640° C the rare earth metals in the bismuth stream are effectively converted to the divalent and trivalent rare earth chlorides which are soluble in the lithium chloride stream.

The bismuth stream leaving the extractor (C) is recycled to the rare earth extractor with a small amount of makeup bismuth corresponding to that busmuth routed to the

3.5.5 Rare Earth Transfer (Cont'd)

protactinium extractor. This bismuth makeup is reconstituted to the 0.2 mole percent reductant level by the addition of lithium. The bismuth stream leaving the extractor (C) is nearly saturated with thorium. The distribution ratios, however, are such that practically no thorium is transferred to the lithium chloride phase along with the rare earth chlorides.

3.5.6 Trivalent Rare Earth Extraction

The trivalent rare earths are removed from lithium chloride in the extractor (E) at 640° C by contacting with a bismuth stream that contains about five mole percent of lithium reductant.

The major portion of the bismuth stream leaving the extractor (E) is recycled while a smaller portion is sent to the trivalent rare earth removal salt purge section. The recycle bismuth stream is reconstituted with purified bismuth prior to recycling to the trivalent rare earth removal system. The purified bismuth stream is adjusted to the five mole percent reductant level by the addition of lithium.

The major protion of the lithium chloride stream from extractor (E) is returned to extractor (C). A small portion (about two percent) of this stream is diverted to the divalent rare earth extraction process.

3.5.7 Divalent Rare Earth Extraction

A small portion of lithium chloride stream is treated in extractor (D) to remove the divalent rare earth fission products. This is accomplished by contacting with a bismuth stream containing 50 mole percent lithium reductant causing the divalent rare earth chlorides to be reduced and transferred to the bismuth phase.

3.5.7 Divalent Rare Earth Extraction (Cont'd)

The purified lithium chloride stream rejoins the major stream to the metal transfer extractor (C) process.

3.5.8 Protactinium Decay Uranium Recovery, Divalent Rare Earth Removal

The bismuth stream from the protactinium extractor (A) and the bismuth stream from the divalent rare earth extractor join the oxidation tower. In this oxidation tower, the protactinium and divalent rare earth metals in the bismuth stream are oxidized with hydrogen fluoride in the presence of a recycle salt stream.

The protactinium and rare earth fluorides are now soluble in the salt and leave the oxidation tower, and the bismuth stream is now purified. A portion is recycled to the divalent rare earth extractor (D) after the addition of the appropriate amount of lithium reductant. The remainder of the bismuth is routed to the salt rare earth extractor (B) after the addition of the appropriate amount of lithium reductant.

The salt stream from the oxidizer contains not only the protactinium fluoride and rare earth fluorides, but also uranium fluoride resulting from protactinium fluoride decay in the decay tank. This salt stream is reacted with fluorine in the fluorination section. The volatile UF_6 stream is processed in the recovery plant to remove volatile fission products. The combined streams of UF_6 are recycled to the fuel salt reconstitution section. A small amount of net UF_6 is removed from the system.

A small protion of the effluent salt from the fluorinator is purged to the trivalent rare earth removal section.

The major portion of this salt is held in the decay tank to effect the decay of protactinium fluoride to uranium fluoride. The effluent from the decay tank is recycled to the oxidation reactor.

3.5.9 Trivalent Rare Earth Removal, Salt Purge

The bismuth stream from the trivalent rare earth extractor (E) is oxidized with hydrogen fluoride in the oxidation tower in the presence of salt streams purged from the feed to the decay tank and purged from the return salt stream from the rare earth extractor (B). The trivalent rare earths are oxidized and thus become soluble in the salt stream leaving the oxidizer. The purified bismuth stream is recycled to the trivalent rare earth extractor (E) after the addition of the lithium reductant.

The purged salt stream from the oxidizer is held up in a waste salt tank where any remaining uranium fluoride is periodically fluorinated out and recovered as UF_6. The salt discard, free of uranium contains all the rare earth fission products, corrosion products, and other impurities present in the fuel salt.

Table 3.1

Summary of Principle Data for a Conceptual 1000 MWe MSBR Power Station

General	
Thermal capacity of reactor, Mw(t)	2250
Gross electrical generation, Mw(e)	1035
Net electrical output, Mw(e)	1000
Net overall thermal efficiency, %	44.4
Plant factor	0.8
Net plant heat rate, Btu/kwhr	7690
Structures	
Reactor cell, ft	72 diam x 42 H
Confinement building, ft	134 diam x 189 H
Reactor	
Description	
Dimensions, ft	
Core zone 1	
Height	13.0
Diameter	14.4
Region thicknesses	
Axial: Core zone 2	0.75
Plenum	0.25
Reflector	2.0
Radial: Core zone 2	1.25
Annulus	0.167
Reflector	2.5
Salt fractions	
Core zone 1	0.132
Core zone 2	0.37
Upper plenum	0.85
Lower plenum	1.00
Annulus	1.0
Reflector	0.01
Salt composition, mole %	
UF_4	0.232
PuF_3	0.0006
ThF_4	12
BeF_2	16
LiF	72

Table 3.2

Nuclear Performance Data

Conservation coefficient, $\left[Mw(t)/kg\right]^2$	14.1
Breeding ratio	1.063
Yield, % per annum	3.20
Inventory, fissile, kg	1504
Inventory, salt volume, primary system ft^3	1720
Inventory, reprocessing plant ft^3	420
Specific power, Mw(t) kg	1.50
Doubling time, system, year	20
Peak damage flux, $E > 50$ kev, $n/cm^2 sec$	
Core zone 1	3.5×10^{14}
Reflector	3.7×10^{13}
Vessel	4.3×10^{11}
Power density, w/cm^3	
Average	22.2
Peak	70.4
Ratio	3.17
Fission power fractions by zone	
Core zone 1	0.790
Core zone 2	0.130
Annulus and plena	0.049
Reflector	0.012
Ratio C/Th/U	
Core zone 1	8660/52/1
Core zone 2	2240/52/1

Table 3.3

Chemical Processing Data

Nuclide Group Data

Processing Group	Nuclides	Units, Full Power	Cycle Time
Rare earths	Y,La,Ce,Pr,Nd,Pm,Sm		
	Gd	days	25
	Eu	days	500
Noble metals	Se,Nb,Mo,Tc,Ru,Rh,Pd,	sec	20
	Ag,Sb,Te		
Semi-noble metals	Zr,Cd,In,Sn	days	200
Gases	Kr,Xe	sec	50
Volatile fluorides	Br,I	days	60
Discard	Rb,Sr,Cs,Ba	days	3435
Salt discard	Th,Li,Be,F	days	4200
Protactinium	^{233}Pa	days	10
Higher nuclides	^{237}Np, ^{242}Pu	years	16

Process System Data

Total inventory fuel salt in primary system, ft^3	1720
Processing rate, gpm	0.88
Cycle time for salt inventory, days	10

Table 3.4

Neutron Balance Data

Isotope	Absorptions[a/]	Fissions
^{232}Th	0.9779	0.0030
^{233}Pa	0.0016	
^{233}U	0.9152	0.8163
^{234}U	0.0804	0.0004
^{235}U	0.0747	0.0609
^{236}U	0.0085	
^{237}U	0.0074	
^{238}Pu	0.0074	
^{239}Pu	0.0073	0.0045
^{240}Pu	0.0027	
^{241}Pu	0.0027	0.0020
^{242}Pu	0.0006	
^{6}Li	0.0035	
^{7}Li	0.0157	
^{9}Be	0.0070	0.0045
^{19}F	0.0201	
Graphite	0.0513	
Fission products	0.0202	
Leakage	0.0244	
$\eta\epsilon$	2.2285	

a/ These values are normalized to one neutron absorption per fissile isotope (^{233}U, ^{235}U, ^{239}Pu, ^{241}Pu).

Table 3.5

Tritium Production and Distribution

Production

Ternary fission		31
$^{6}Li(n, \alpha)^{3}H$		1210
$^{7}Li(n,\alpha\text{-}n)\ ^{3}H$		1170
$^{19}F(n,\ ^{17}O)^{3}H$		9
	Total	2420 Curies/day

Distribution

	Percent of Total ^{3}H Production
Purge gas from primary system:	
As $^{3}H_2$	5.8
As ^{3}HF	7.0
Purge gas from secondary system	0.1
Reactor cell atmosphere	8.7
Steam cell atmosphere	9.4
Entering steam-power system	69.0
	100.0

Table 3.6

Isothermal Reactivity Coefficients

Component	Reactivity Coefficient $\frac{1}{k}\frac{k}{T}$ (per ^{o}C) $\times 10^{-5}$
Doppler	-4.37
Salt thermal base	+0.27
Salt density	+0.82
Total salt	-3.22
Graphite thermal base	+2.47
Graphite density	-0.12
Total graphite	+2.35
Total core	-0.87

Table 3.7

Terminology Used to Designate Regions and Zones of Reactor

Term Used	Region or Zone[a/]
Core	This includes the 13%, 37%, 85%, and 100% salt regions out to the inner face of the reflector but does not include the reflector.
Zone I[b/] (Zone IA, Zone IB, etc)	13% salt region of core.
Zone II[c/] (Zone IIA, Zone IIB, etc)	37% salt region of core.
Annulus	100% salt annular region of core between Zone II and radial reflector.
Lower plenum	100% salt region of core between Zone II and lower axial reflector.
Upper plenum	85% salt region of core between Zone II and upper axial reflector.
Radial reflector	Graphite region surrounding core in radial direction.
Upper axial reflector	Graphite region above core.
Lower axial reflector	Graphite region below core.
Radial vessel coolant passage	Gap between radial reflector and vessel wall.
Upper vessel coolant passage	Gap between upper axial reflector and upper vessel head.
Lower vessel coolant passage	Gap between lower axial reflector and lower vessel head.
Inlet	Salt inlet passage in lower vessel head and lower axial reflector.
Outlet passage	Salt outlet passage in upper axial reflector.

a/ See Figures 3.8 and 3.13

b/ I-A, I-B, etc are used to designate different shapes in a zone.

c/ The term "radial zone II", "upper zone II", and "lower axial zone II" should be used as necessary.

Table 3.8

Volumes and Weights in MSBR Core and Reflectors

Region	Percent Salt %	Salt Volume ft^3	Graphite Weight lb
Core, Zone I (14' oct x 13' high)	13	288	221,400
Lower and Upper Axial, Zone II, 9" thick, top and bottom	37	94.5	18,500
Upper plenum, 3" thick, top only	85	36.2	700
Lower plenum, 2-1/2" thick, bottom	100	35.4	-
Radial, Zone II, 16.8' D x 14.5' H	37	282	55,000
Annulus, 17.2' D x 15' H (2" gap)	100	132	-
Salt inlet (lower section) 3.5' D x 1.2' H	98	11	-
Salt inlet (upper section) 4' D x 1.2' H	50	7.3	900
Lower vessel coolant passage, 1/2"	100	8.2	-
Radial vessel coolant plenum	62.5	46.5	3,400
Radial vessel coolant, 1/4" gap	100	21.2	-
Radial reflector, 17.2' H x 22.2' OD	1.2	26.9	254,400
Axial reflector, bottom	3	14.7	54,800
Control rod entrance thimble		2.9	-
Axial reflector, top	4	14.7	54,800
Outlet passage		42.1	5,400
Annulus between upper head flange extension and vessel, 1/2" gap	100	8.7	-
TOTALS		1074	669,000

Table 3.9

Graphite Element Design Data

Overall length of core elements, approximate, ft	14.75
Number of core elements	1412
Distance across flats Zone I, ft	14
Outside diameter of undermoderated region, Zone II, ft	15
Overall height of Zone I plus Zone II, ft	15
Maximum graphite damage flux ($<$50 kev), n/cm^2-sec	3.5×10^{14}
Graphite temperature at maximum neutron flux region, ^{o}F	1284
Graphite temperature at maximum graphite damage region, ^{o}F	1307
Estimated useful life of graphite, yr	4
Total weight of graphite in reactor, lb	669,000
Weight of removable core assembly, lb	600,000
Maximum flow velocity in core, fps	8.5
Pressure drop due to salt flow in core, psi	18

Table 3.10

Reactor Vessel Design Data

Reactor vessel inside diameter, ft	22.2
Vessel Height at center, ft (excluding upper cylinder)	20
Vessel wall thickness, in.	2
Vessel head thickness, in.	3
Vessel design pressure, psig	75

Table 3.11

Primary Heat Exchanger Design Data

Type	One-pass shell and tubes with disk and doughnut baffles
Rate of heat transfer per unit,	
Mw	556.3
Btu/hr	1.9×10^9
Tube-side conditions	
Hot fluid	Fuel salt
Entrance temperature, ^oF	1300
Exit temperature, ^oF	1050
Entrance pressure, psi	180
Pressure drop across exchanger, psi	130
Mass flow rate, lb/hr	23.4×10^6
Shell-side conditions	
Cold fluid	Coolant salt
Entrance temperature, ^oF	850
Exit temperature, ^oF	1150
Exit pressure, psi	34
Pressure drop across exchanger, psi	116.2
Mass flow rate, lb/hr	17.6×10^6
Overall	
Tube material	Hastelloy N
Tube OD, in.	0.375
Tube thickness, in.	0.035
Tube length, ft	22.57
Tube sheet to tube sheet distance, ft	21.31
Expansion bend radius, in.	9.5
Shell material	Hastelloy N
Shell thickness, in.	0.5
Shell ID	68.1
Central tube diameter, OD, in.	20

Table 3.11 (Cont'd)

Primary Heat Exchanger Design Data

Type	One-pass shell and tubes with disk and doughnut baffles
Tube sheet material	Hastelloy N
Tube sheet thickness, in.	4.75
Tube maximum primary (P) stresses, psi	674
Allowed primary stresses, psi (1244 F)	3912
Tube maximum primary and secondary (P + Q) stresses, psi	11,639
Allowed primary secondary stresses, psi	11,737
Tube maximum peak (P + Q + F) stresses, psi	13,006
Allowed peak stresses, psi	25,000
Number of tubes	5896
Pitch of tubes, in.	0.75
Total heat transfer area, ft^2	13,037
Basis for area calculation	Outside of tubes
Type of baffle	Disk and doughnut
Number of baffles, total	21
Baffle spacing, in.	11.23
Disk OD, in.	54.6
Doughnut ID, in.	45.5
Overall heat transfer coefficient, U, Btu/hr-ft^2	838.3
Volume of fuel salt in tubes, ft^3	67.38

Table 3.12

Pump Design Data

	Primary	Secondary
Number required	4	4
Design temperature, ^{o}F	1300	1150
Capacity, gpm	16,000	20,000
Head, ft	150	300
Speed, rpm	890	1190
Specific speed, N_s	2630	2335
NPSH required, ft	16	20
Brake horsepower	2350	3230
Impeller diameter, in.	34	35-1/2
Pump tank diameter, in.	72	72
Suction diameter, in.	21	21
Discharge diameter, in.	16	16

Table 3.13

Drain Tank Design Data

Salt capacity, ft^3	2,500
Outside diameter of vessel, ft	14
Overall height, ft	22
Design heat loads:	
Due to off-gas decay, Mw(t)	18
Max transient after sudden salt drain, Mw(t)	53
Emissivity of Hastelloy N surface	0.55
Emissivity of surface coated with iron or calcium titanate	0.90
Emissivity of water-tube surface (oxidized steel or copper)	0.75
Conductivity of nitrogen gas in annuli, Btu/hr-ft-^oF	0.026
Thimble surface area, based on temp, of 850 F under off-gas load conditions, ft^2	10,700
Thimble ID, in.	2
Number of thimbles required	1,028
Average NaK temperature under off-gas load, ^oF	400
Average NaK temperature under maximum load, ^oF	640
Maximum thimble temperature, ^oF	1,400
Number of autonomous NaK circuits selected for this study (number is optional)	10
NaK flowrate per circuit under off-gas heat load of 18 Mw(t), gpm	801
NaK flowrate per circuit under maximum heat load of 53 Mw(t), gpm	1,081

Table 3.13 (Cont'd)

Drain Tank Design Data

Hot and cold leg temperatures under off-gas load of 18 Mw(t), ^{o}F	436 - 350
Hot and cold leg temperatures under maximum heat load of 53 Mw(t), ^{o}F	726 - 550
Nak circuit pipe size (Sch 40), in.	12
Assumed length of each leg of circuit, ft	100
Assumed elevation difference, center of drain tank to center of water pool, ft	60
Temperature of receiving surface of thimble in water tank, ^{o}F	232
Heat transfer area of NaK tubes in water tank, ft^2	83,100
Total water boiled from water tank, ft^3:	
2 days after shutdown	24,000
10 days after shutdown	81,000
35 days after shutdown	192,000
Makeup water required for 18 Mw(t) heat load, gpm	126

Table 3.14

Steam Generator Design Data

Type	Horizontal U-tube, U-shell exchanger with cross-flow baffles
Number required	16
Rate of heat transfer, Mw	121
Btu/hr	4.13×10^8
Shell side conditions	
Hot fluid	Coolant salt
Entrance temperature, ^oF	1150
Exit temperature, ^oF	850
Entrance pressure, psia	233
Exit pressure, psia	172.0
Pressure drop across exchanger, psi	61
Mass flow rate, lb/hr	3.82×10^6
Tube-side conditions	
Cold fluid	Supercritical fluid
Entrance temperature, ^oF	700
Exit temperature, ^oF	1000
Entrance pressure, psia	3752
Exit pressure, psia	3600
Pressure drop across exchanger, psi	152
Mass flow rate, lb/hr	6.33×10^5
Mass velocity, lb/hr-ft^2	2.55×10^6
Tube material	Hastelloy N
Tube OD, in.	0.50
Tube thickness, in.	0.077
Tube length, tube sheet to tube sheet, ft	76.4
Shell material	Hastelloy N
Shell thickness, in.	0.375
Shell ID, in.	18.25
Tube sheet material	Hastelloy N
Tube sheet thickness, in.	4.5
Number of tubes	393
Pitch of tubes, in.	0.875

Table 3.14 (Cont'd)

Steam Generator Design Data

Type	Horizontal U-tube, U-shell exchanger with cross-flow baffles
Total heat transfer area, ft^2	3929
Basis for area calculation	Outside surface
Type of baffle	Cross flow
Number of baffles	18
Baffle spacing, ft	4.02
Maximum stress intensity, psi	
Tube	
Calculated	$P_m = 13,900$; $(P_m + Q) = 30,900$
Allowable (1038 F)	$P_m = 15,500$; $(P_m + Q)_{allow} = 46,500$
Shell	
Calculated	$P_m = 5,800$; $(P_m + Q) = 13,200$
Allowable (1150 F)	$P_m = 8,800$; $(P_m + Q)_{allow} = 26,400$
Maximum tube sheet stress, psi	
Calculated	$<$17,000
Allowable (1000 F)	17,000

Table 3.15

Steam Reheater Design Data

Type	Straight tube and shell with disk and doughnut baffles
Number required	8
Rate of heat transfer per unit,	
Mw	36.6
Btu/hr	1.25×10^8
Shell-side conditions	
Hot fluid	Coolant salt
Entrance temperature, ^oF	1150
Exit temperature, ^oF	850
Entrance pressure, psi	228
Exit pressure, psi	168
Pressure drop across exchanger, psi	59.5
Mass flow rate, lb/hr	1.16×10^6
Tube-side conditions	
Cold fluid	Steam
Entrance temperature, ^oF	650
Exit temperature, ^oF	1000
Entrance pressure, psi	580
Exit pressure, psi	550
Pressure drop across exchanger, psi	29.9
Mass flow rate, lb/hr	6.41×10^5
Tube material	Hastelloy N
Tube OD, in.	0.75
Tube thickness, in.	0.035
Tube length, tube sheet to tube sheet, ft	30.3
Shell material	Hastelloy N
Shell thickness, in.	0.5
Shell ID, in.	21.2
Tube sheet material	Hastelloy N
Number of tubes	400

Table 3.15 (Cont'd)

Steam Reheater Design Data

Pitch of tubes, in.	1.0 (triangular)
Total heat transfer area, ft^2	2376
Basis for area calculation	Outside of tubes
Type of baffle	Disk and doughnut
Number of baffles	21 and 21
Baffle spacing, in.	8.65
Disk OD, in.	17.8
Doughnut ID, in.	11.6
Overall heat transfer coefficient, U, Btu/hr-ft^2	306
Maximum stress intensity, psi	
Tube	
Calculated	$P_m = 4582$; $(P_m + Q) = 14,090$
Allowable	$P_m = S_m = 13,000$; $(P_m + Q) = 3S_m = 39,000$
Shell	
Calculated	$P_m = 5016$; $(P_m + Q) = 14,550$
Allowable	$P_m = S_m = 9500$; $(P_m + Q) = 3S_m = 28,500$

Table 3.16

Reheat-Steam Preheater Design Data

Type	One-tube-pass one-shell-pass U-tube U-shell exchanger with no baffles
Number required	8
Rate of heat transfer, each	
Mw	12.33
Btu/hr	4.21×10^7
Shell-side conditions	
Cold fluid	Steam
Entrance temperature, °F	551
Exit temperature, °F	650
Entrance pressure, psi	595.4
Exit pressure, psi	590.0
Pressure drop across exchanger, psi	5.4
Mass flow rate, lb/hr	6.31×10^5
Mass velocity, lb/hr ft^2	3.56×10^5
Tube-side conditions	
Hot fluid	Supercritical water
Entrance temperature, °F	1000
Exit temperature, °F	869
Entrance pressure, psi	3600
Exit pressure, psi	3535
Pressure drop across exchanger, psi	65
Mass flow rate, lb/hr	3.68×10^5
Mass velocity, lb/hr ft^2	1.87×10^6
Velocity, fps	93.5

Table 3.16 (Cont'd)

Reheat-Steam Preheater Design Data

Tube material	Croloy
Tube OD, in.	0.375
Tube thickness, in.	0.065
Tube length, tube sheet to tube sheet, ft	13.2
Shell material	Croloy
Shell thickness, in.	7/16
Shell ID, in.	20.25
Tube sheet material	Croloy
Tube sheet thickness, in.	6.5
Number of tubes	603
Pitch of tubes, in.	0.75
Total heat-transfer area, ft^2	781
Basis for area calculation	Tube OD
Type of baffle	None
Overall heat transfer coefficient, U, Btu/hr ft^2	162
Maximum stress intensity, a/ psi	
Tube	
Calculated	$P_m = 10{,}503$; $(P_m + Q) = 7080$
Allowable	$P_m = S_m = 10{,}500$ @ 961 F; $(P_m + Q) = 3S_m = 31{,}500$
Shell	
Calculated	$P_m = 14{,}375$; $(P_m + Q) = 33{,}081$
Allowable	$P_m = S_m = 15{,}000$ @ 650 F; $(P_m + Q) = 3S_m = 45{,}000$
Maximum tube sheet stress, psi	
Calculated	7800
Allowable	7800 @ 1000 F

a/ These values are normalized to one neutron absorption per fissile isotope(^{233}U, ^{235}U, ^{239}Pu, ^{241}Pu).

Table 3.17

Steam System Design Data

Reactor heat input to steam system, Mw(t)	2225
Net electrical output, Mw(e)	1000
Gross electrical generation, Mw(e)	1034.9
Station auxiliary load, Mw(e)	25.7
Boiler-feedwater pressure-booster pump load, Mw(e)	9.2
Boiler-feedwater pump steam-turbine power output, Mw (mechanical)	29.3
Flow to turbine throttle, lb/hr	7.15×10^6
Flow from superheater, lb/hr	10.1×10^6
Gross efficiency, % (1034.9 + 29.3)/2225	47.8
Gross heat rate, Btu/kwhr	7136
Net efficiency, % station (1000/2250 = 44.4%)	44.4
Net heat rate, Btu/kwhr	7687

Table 3.18

Cell Heating Load Design Data

	Reactor Cell	Steam Cell	Drain Tank Cell
Number of cells	1	4	1
Heat loss in kw at 1100° cell temperature	413	195	122
Cell contents heat up load, kwhr	86,000	5000	10,000
Heat up power, kw	413	195	122
Approximate heat up time, days	9	1	6
Heater length, ft	40	40	40
Kilowatts per heater	2.66	2.66	2.66
Number heaters required	312	147	93
Number installed	592	147	186

Table 3.19

Design Properties of Fuel Salt

Components		$^{7}LiF-BeF_2-ThF_4-UF_4$
Composition, mole %		71.7-16-12-0.3
Approximate molecular weight		64
Approximate melting point,	^{o}F	930
Vapor pressure at 1150 F,	mm Hg	< 0.1

Density:

$\rho\,(g/cm^3) = 3.752 - 6.68 \times 10^{-4}\ t\ (^{o}C)$

$\rho\,(lb/ft^3) = 235.0 - 0.02317\ t\ (^{o}F)$

At 1300 F: $\rho = 204.9\ lb/ft^3$

At 1175 F: $\rho = 207.8\ lb/ft^3$

At 1050 F: $\rho = 210.7\ lb/ft^3$

Viscosity:

$\mu\,(centipoise) = 0.109 \exp \frac{4090}{T\ (^{o}K)}$

$\mu\,(lb/ft\text{-}hr) = 0.2637 \exp \frac{7362}{T\ (^{o}R)}$

At 1300 F: $\mu = 17.29\ lb/ft\text{-}hr$

At 1175 F: $\mu = 23.78\ lb/ft\text{-}hr$

At 1050 F: $\mu = 34.54\ lb/ft\text{-}hr$

Heat capacity: $c_p = 0.324\ Btu/lb\text{-}^{o}F \pm 4\%$

Thermal conductivity:

At 1300 F: $k = 0.69\ Btu/hr\text{-}^{o}F\text{-}ft$

At 1175 F: $k = 0.71\ Btu/hr\text{-}^{o}F\text{-}ft$

At 1050 F: $k = 0.69\ Btu/hr\text{-}^{o}F\text{-}ft$

Table 3.20

Design Properties of Coolant Salt

		$NaBF_4$-NaF
Composition, mole %		92-8
Approximate molecular weight		104
Approximate melting point,	^oF	725
Vapor pressure at 1150 F,	mm Hg	252

Density:

$$\rho\ (g/cm^3) = 2.252 - 7.11 \times 10^{-4}\ t\ (^oC)$$

$$\rho\ (lb/ft^3) = 141.4 - 0.0247\ t\ (^oF)$$

At 1150 F: $\rho = 113.0\ lb/ft^3$

At 1000 F: $\rho = 116.7\ lb/ft^3$

At 850 F: $\rho = 120.4\ lb/ft^3$

Viscosity:

$$\mu\,(centipoise) = 0.0877 \exp \frac{2240}{T\ (^oK)}$$

$$\mu\,(lb/ft\text{-}hr) = 0.2121 \exp \frac{4032}{T\ (^oR)}$$

At 1150 F: $\mu = 2.6$ lb/ft-hr

At 1000 F: $\mu = 3.4$ lb/ft-hr

At 850 F: $\mu = 4.6$ lb/ft-hr

Heat capacity: $c_p = 0.360\ Btu/lb\text{-}^oF \pm 2\%$

Thermal conductivity:

At 1150 F: $k = 0.23\ Btu/hr\text{-}^oF\text{-}ft$

At 1000 F: $k = 0.23\ Btu/hr\text{-}^oF\text{-}ft$

At 850 F: $k = 0.26\ Btu/hr\text{-}^oF\text{-}ft$

Table 3.21

Design Properties of Graphite

Density, lb/ft^3 at 70 F	115
Bending strength, psi	4000-6000
Young's modulus of elasticity, psi	1.7×10^{-6}
Poisson's ratio	0.27
Thermal expansion per ^oF	2.3×10^{-6}
Thermal conductivity at 1200 F, unirradiated, Btu/hr-ft-^oF	$\sim$18
Electrical resistivity, ohm-cm x 10^4	8.9 to 9.9
Specific heat, Btu/lb-^oF at 600 F	0.33
at 1200 F	0.42
Helium permeability, cm^2/sec at STP	10^{-8}
Lifetime permissible flux ($E > 50$ keV)	3.0×10^{22} n/cm^2

Table 3.22

Hastelloy N (Modified) Composition and Design Properties

Chemical Composition

Element	Concentration, Weight % Modified Alloy
Nickel	Balance
Molybdenum	12.0
Chromium	7.0
Iron	0 to 5
Manganese	0.2 to 0.5
Silicon	0.1
Titanium	0.5 to 2.0
Boron, maximum	0.0010
Hafnium or Niobium	0 to 2
Cu, Co, P, S, C, W, Al (total)	0.35

Design Properties

	At 80 F	At 1300 F
Density	557	541
Thermal conductivity, Btu/hr-ft-^{o}F	6.0	12.6
Specific heat, Btu/lb-^{o}F	0.098	0.136
Thermal expansion, per ^{o}F	5.7×10^{-6}	9.5×10^{-6}
Modulus of elasticity, psi	31×10^{6}	25×10^{6}
Tensile strength, psi	~115,000	~75,000
Maximum allowable design stress, psi	25,000	3500
Melting temperature, ^{o}F	2500	2500

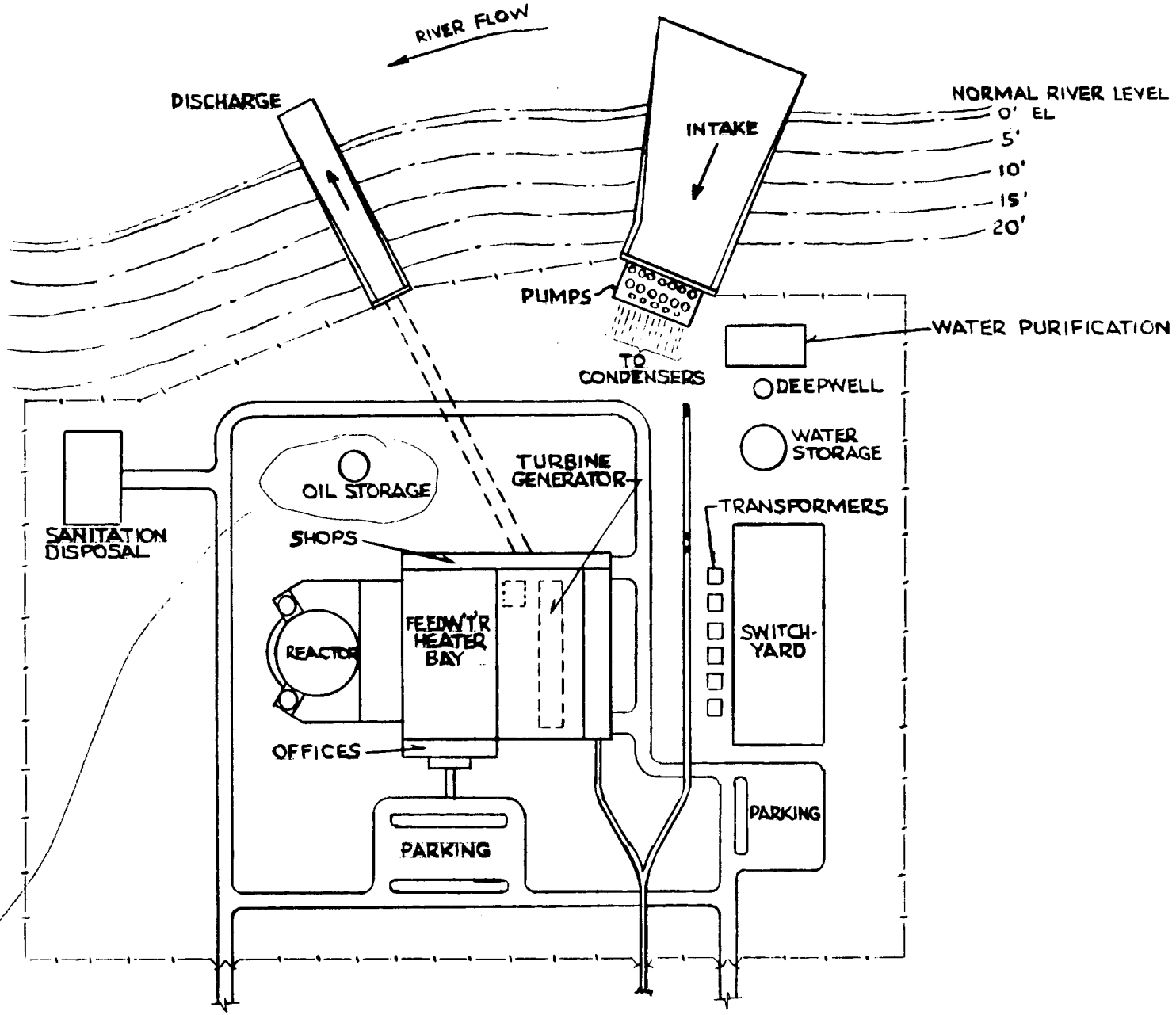

Sowrech?

Figure 3.1. Plot Plan for 1000 MWe MSBR Power Station

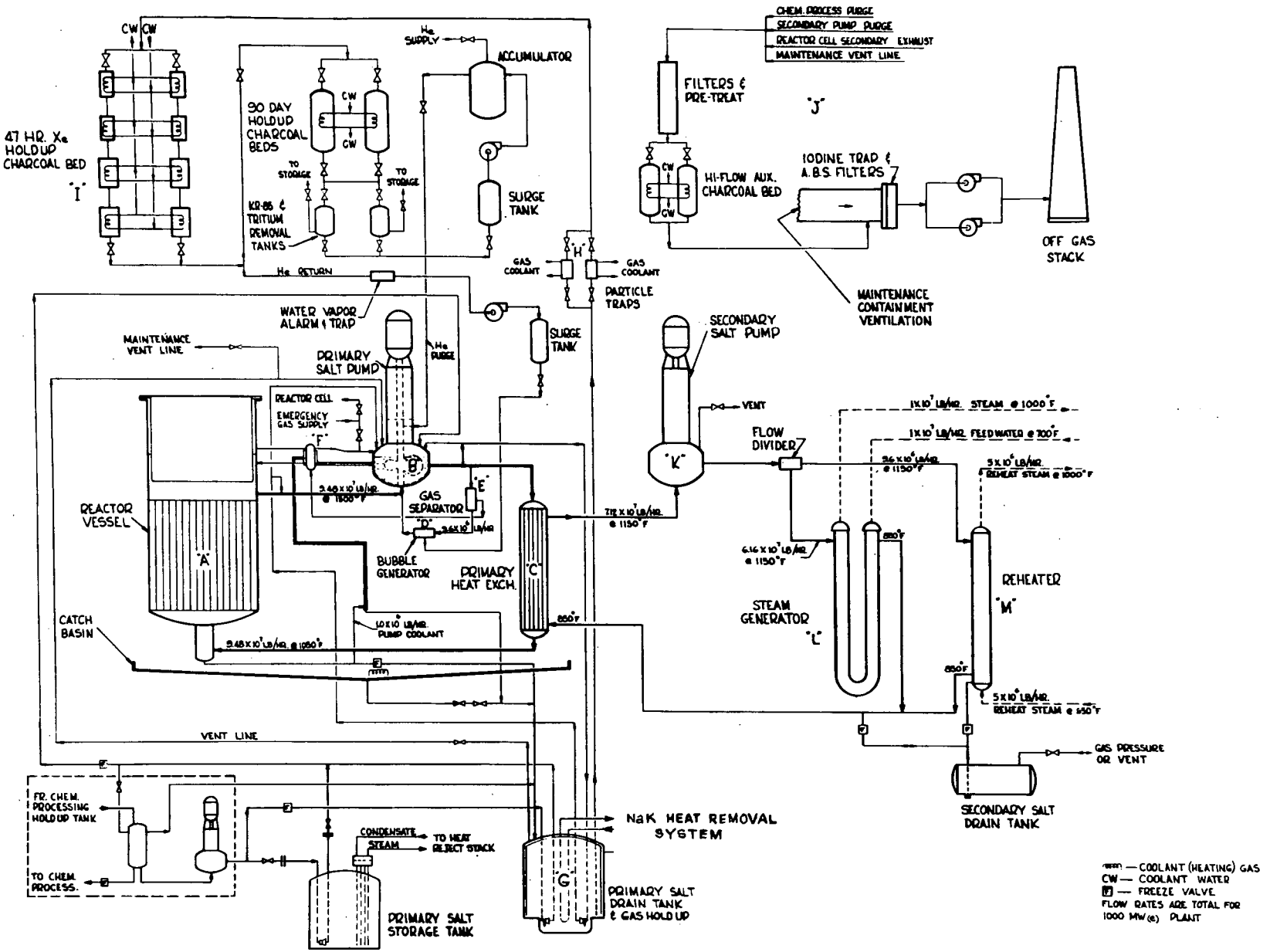

Figure 3.2. Plant Schematic Flow Diagram for 1000 MWe MSBR Power Station

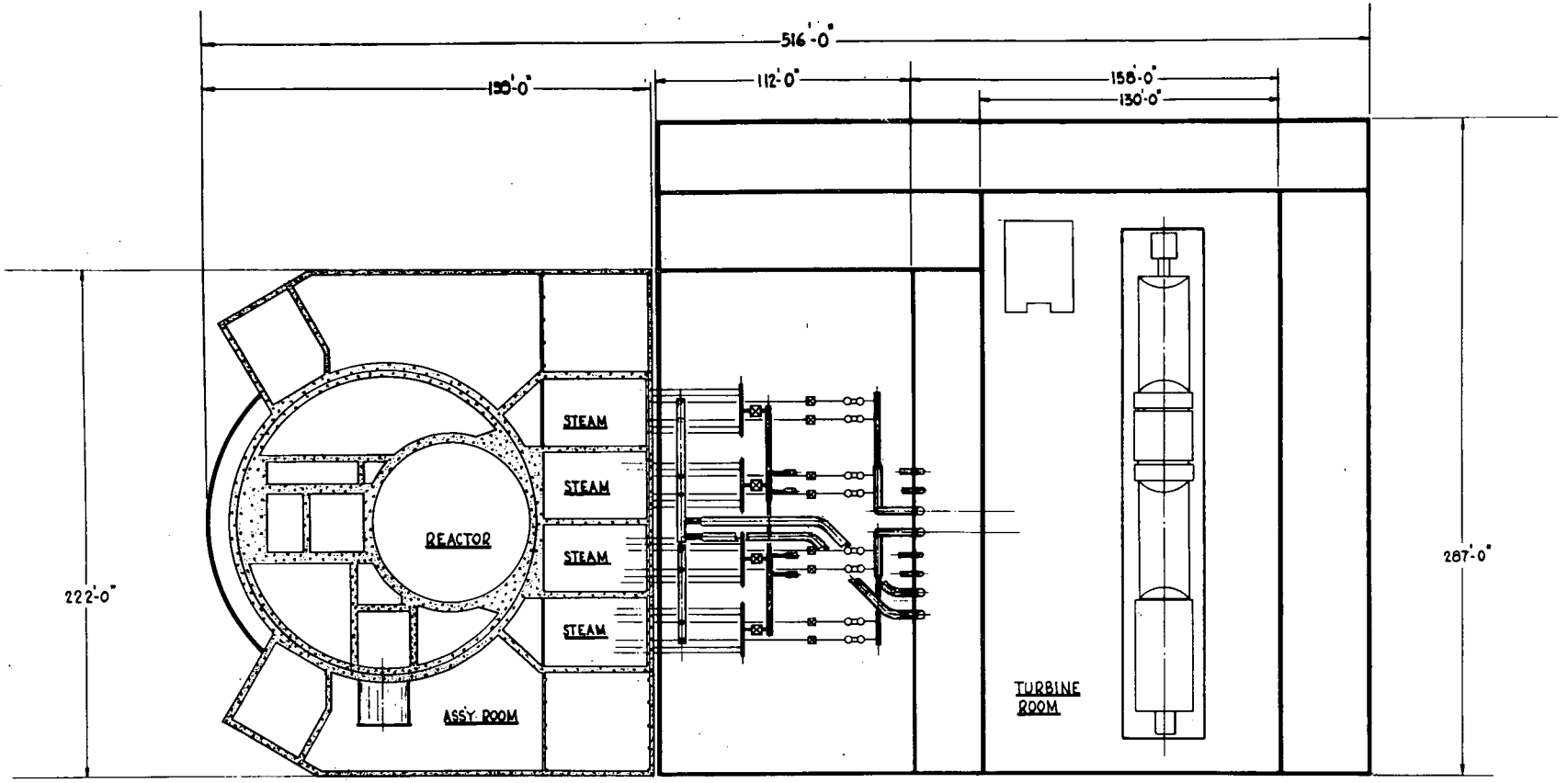

Figure 3.3. Overall Plan View of 1000 MWe MSBR Power Station

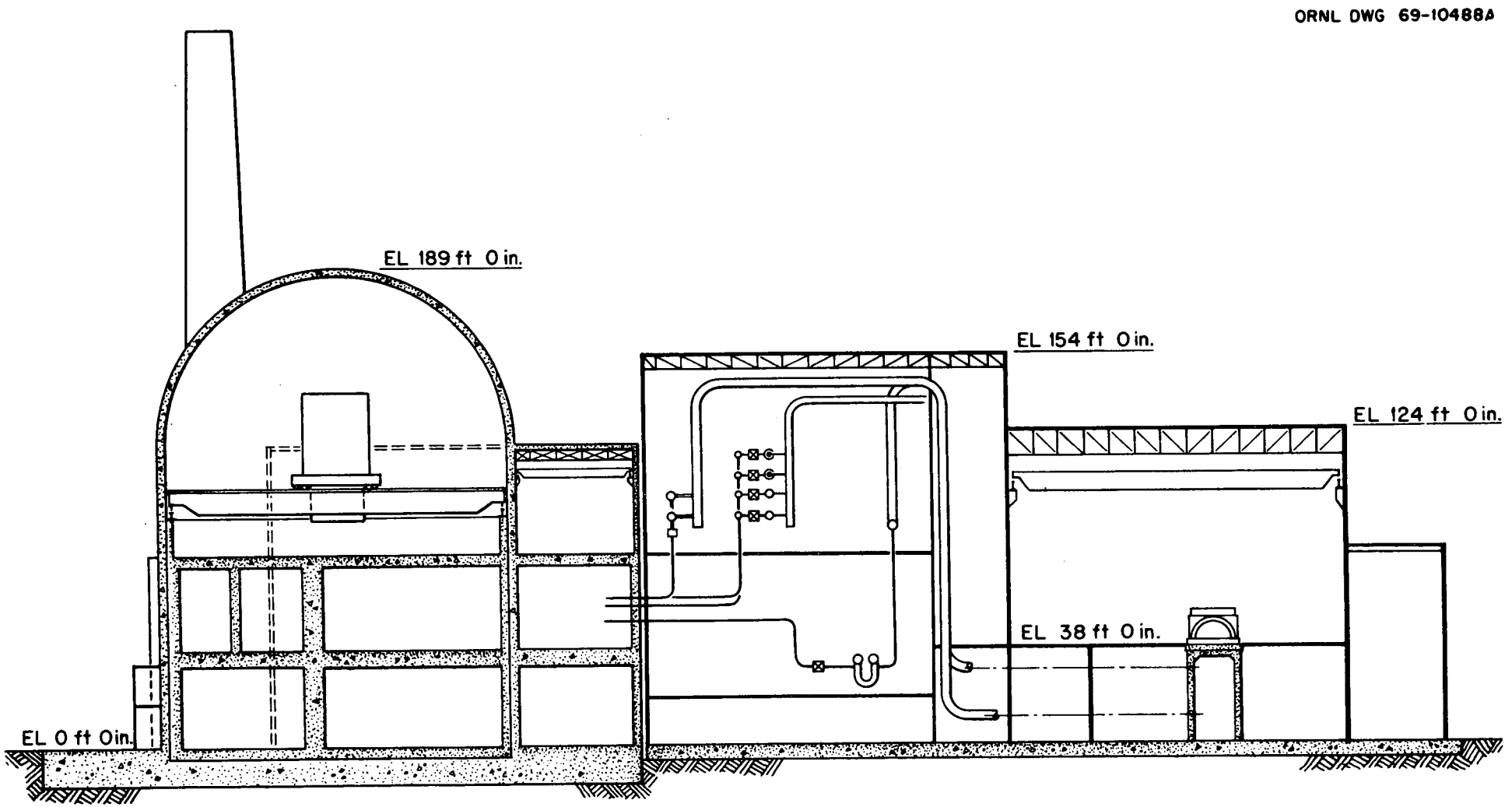

Figure 3.4 Sectional Elevation of 1000 MWe MSBR Power Station

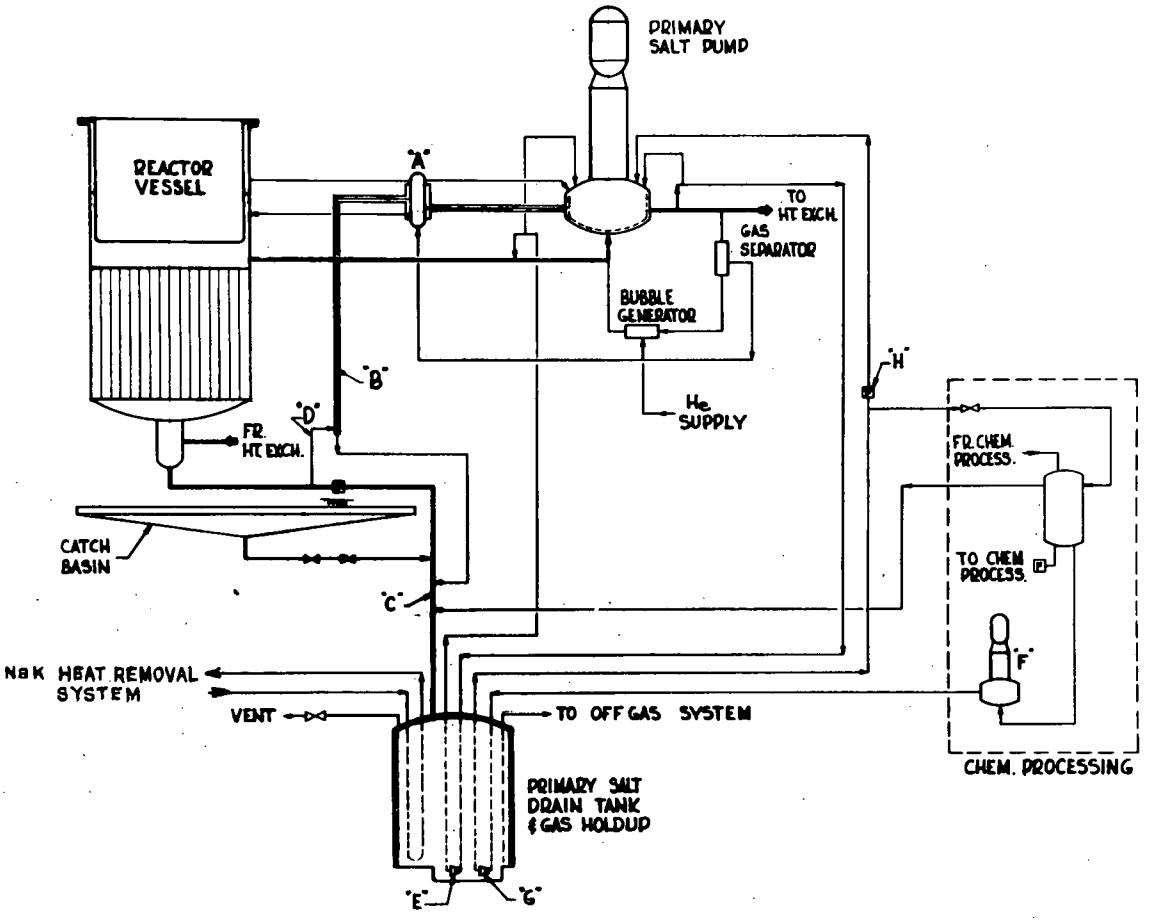

Figure 3.5. Simplified Flow Diagram of Primary Drain Tank and Heat Removal System Using NaK

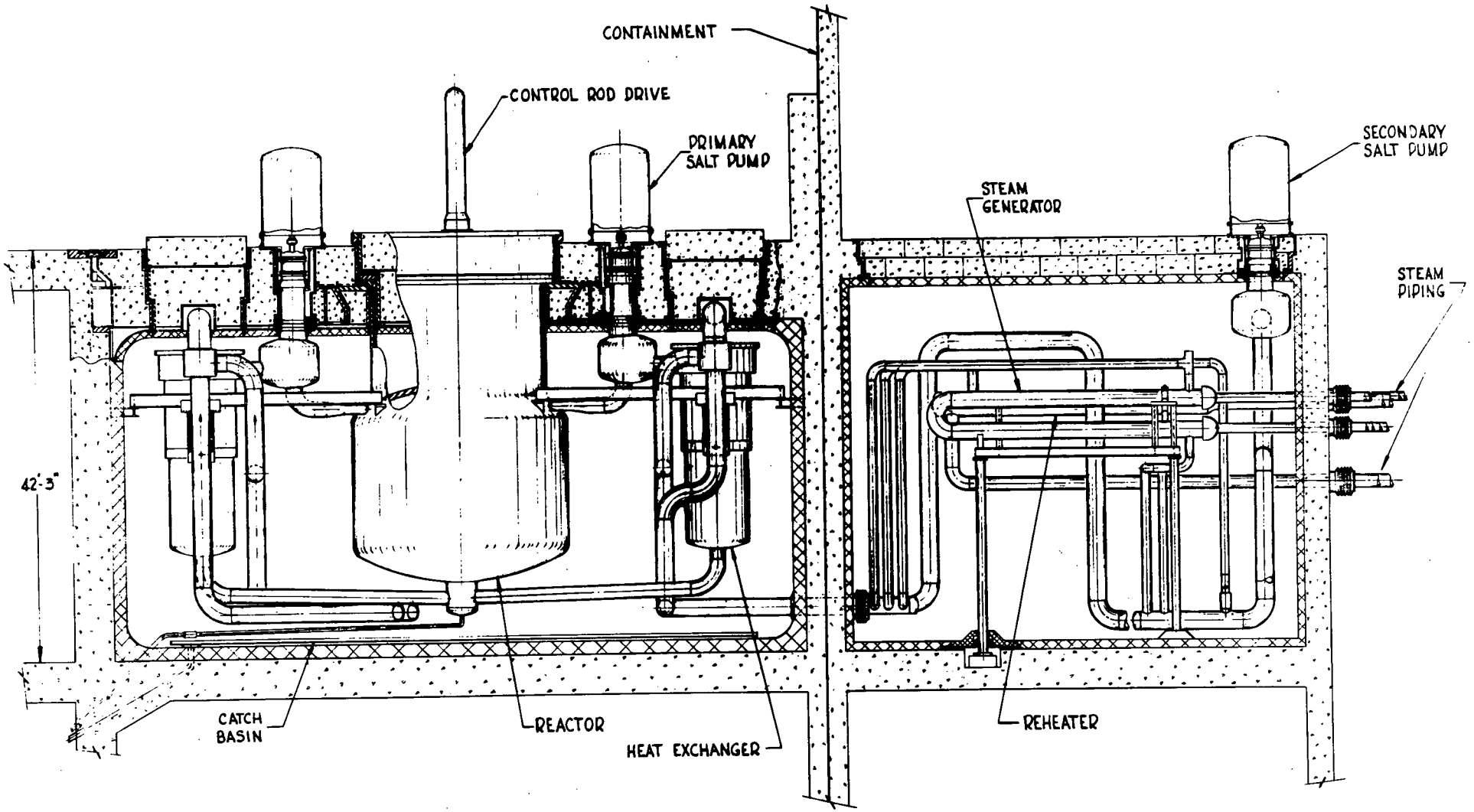

Figure 3.6. Cross Sectional Elevation of Reactor and Steam Cells

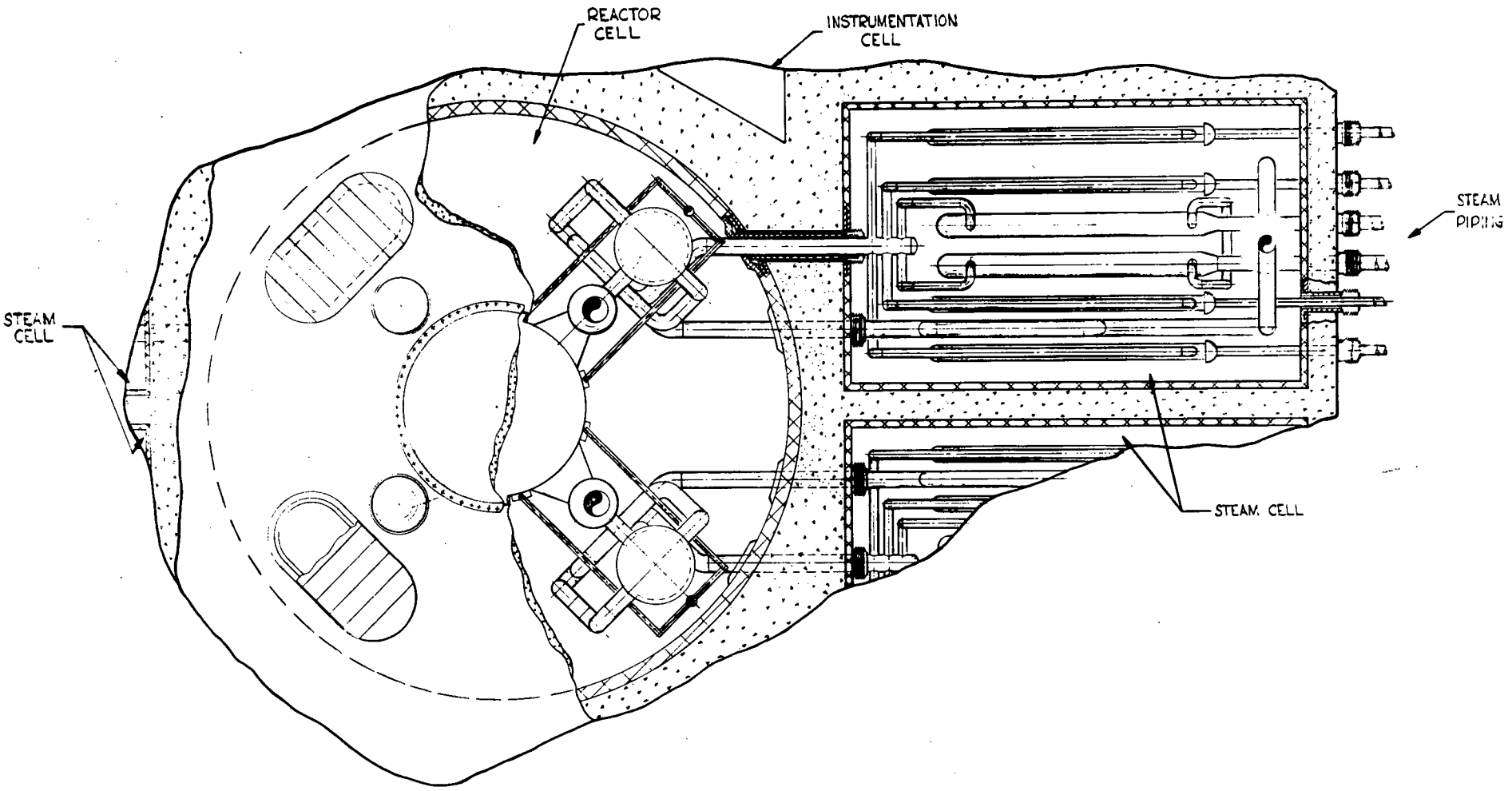

Figure 3.7. Plan View of Reactor and Steam Cells

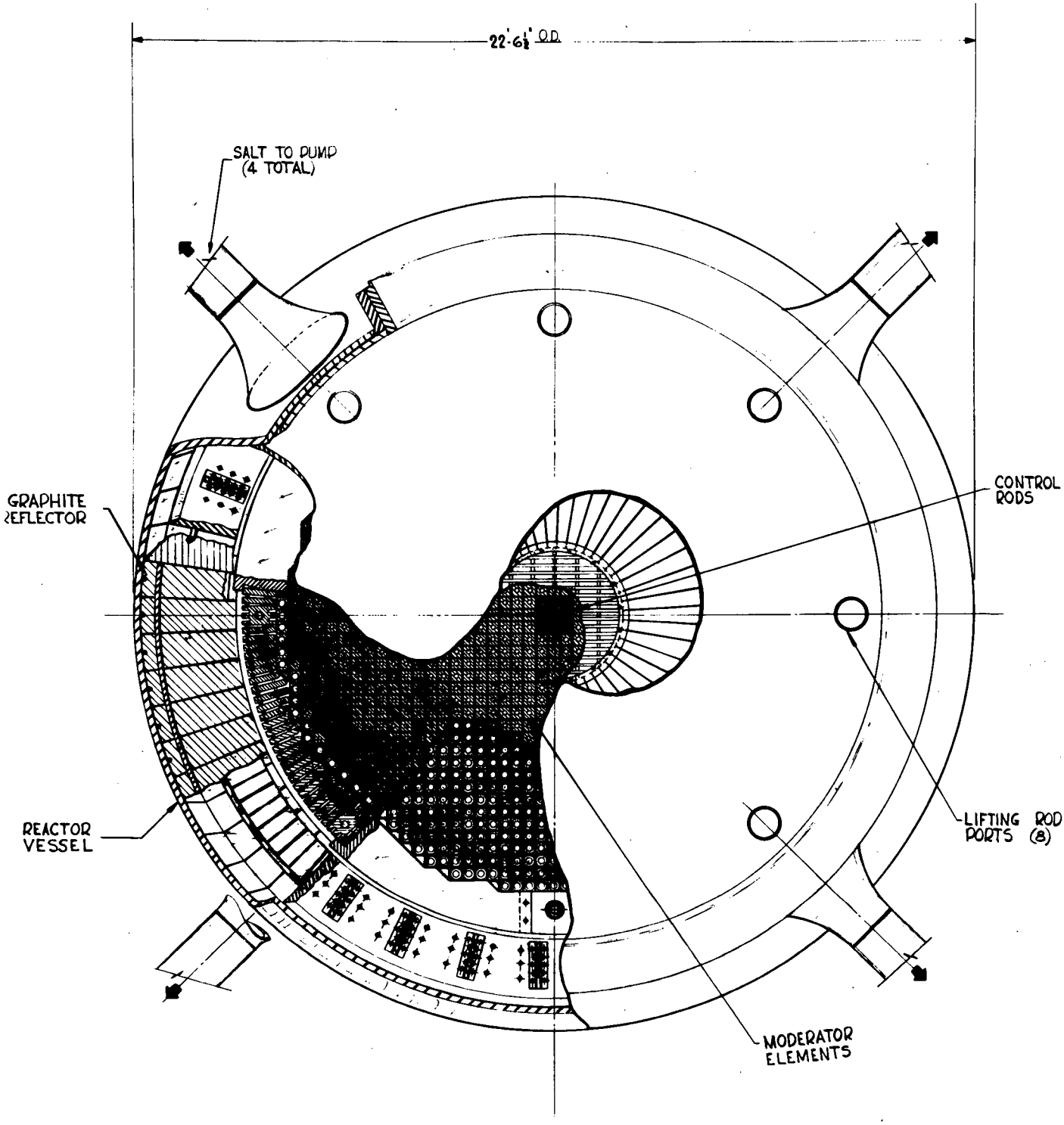

Figure 3.8. Plan View of Reactor Vessel

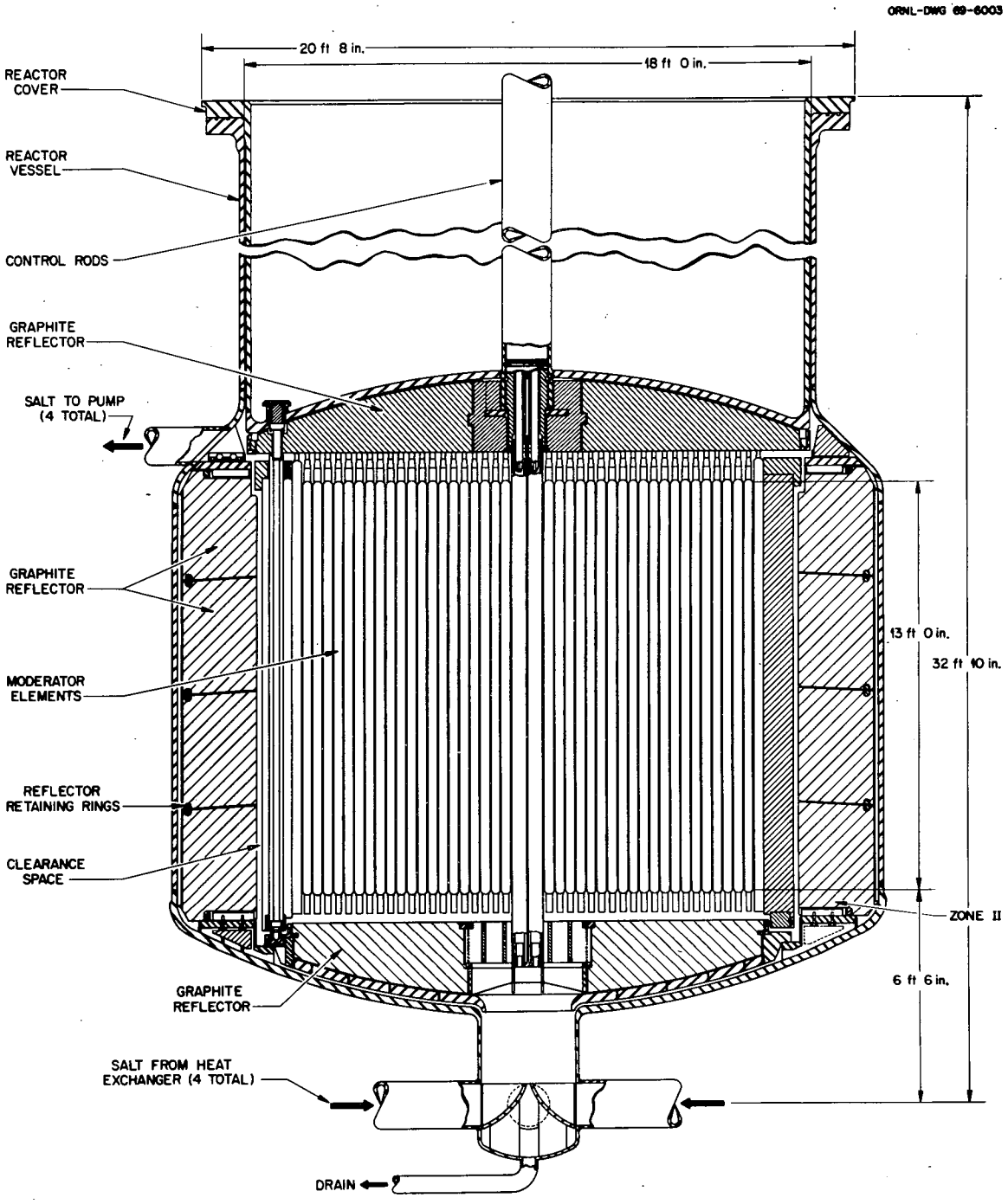

Figure 3.9. Sectional Elevation of Reactor Vessel

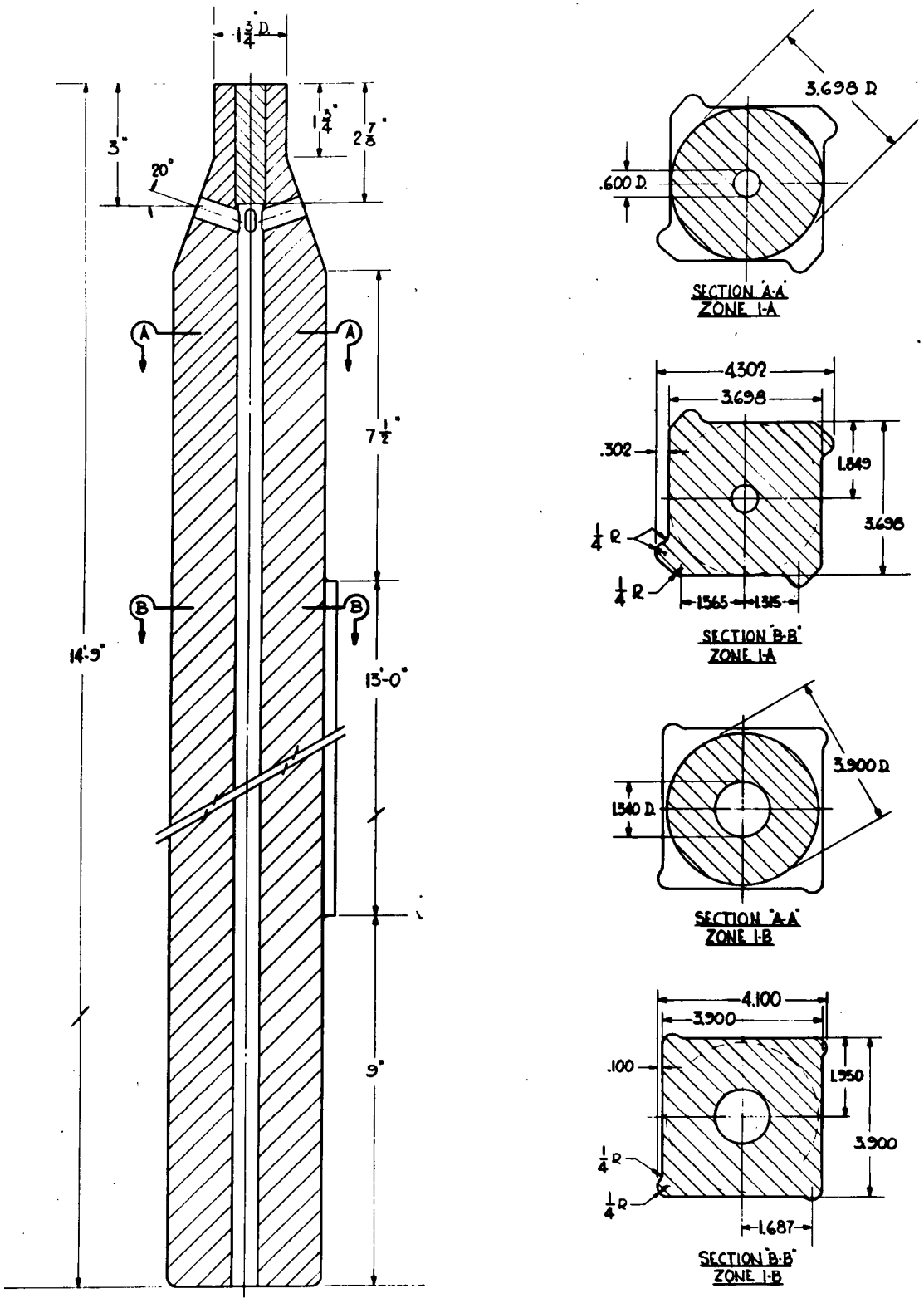

Figure 3.10. Graphite Moderator Element for Zone I

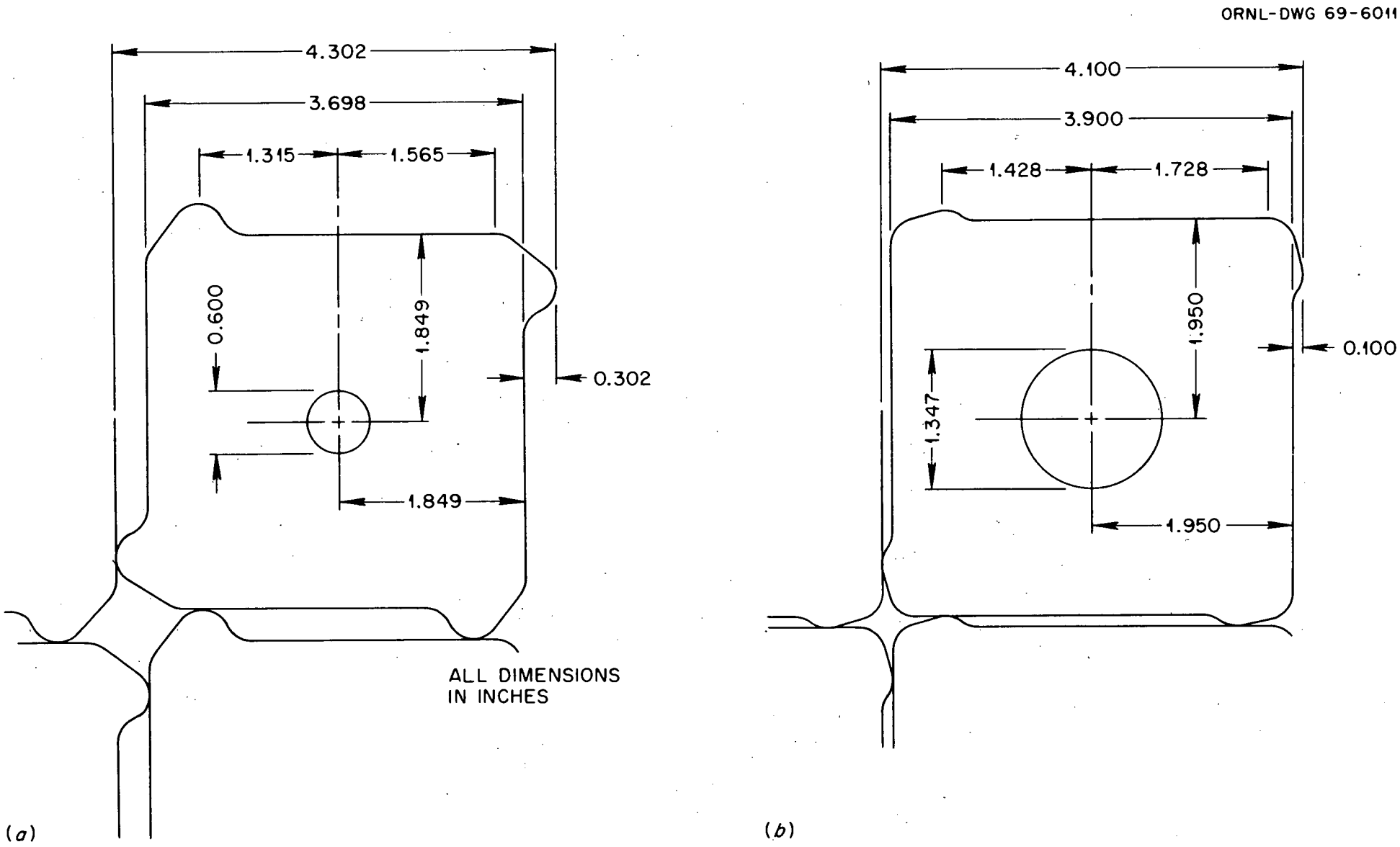

Figure 3.11. Graphite Moderator Element for (a) Zone I-A, and (b) Zone I-B of Reactor Core

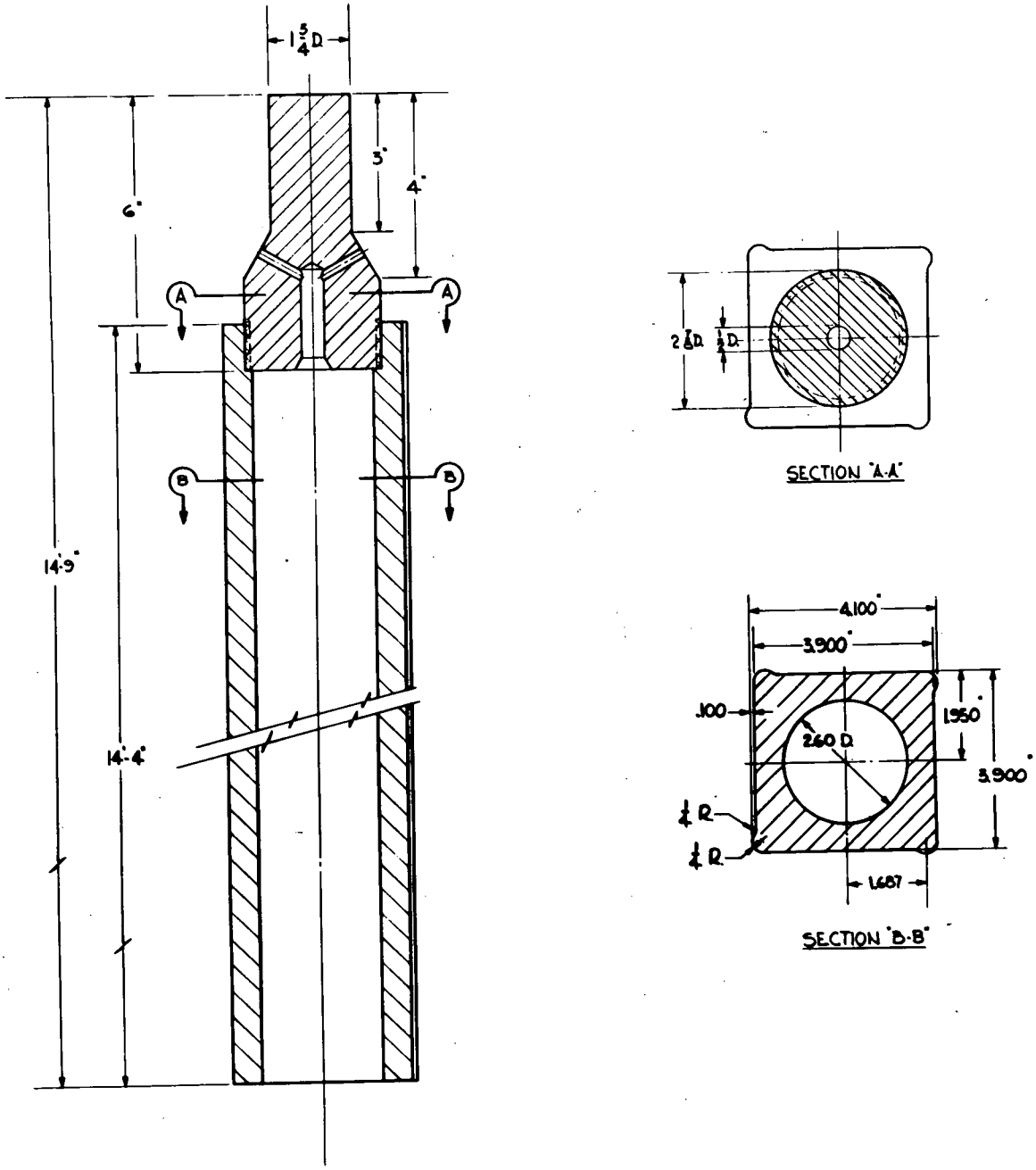

Figure 3.12. Graphite Moderator Element for Zone II of Reactor Core

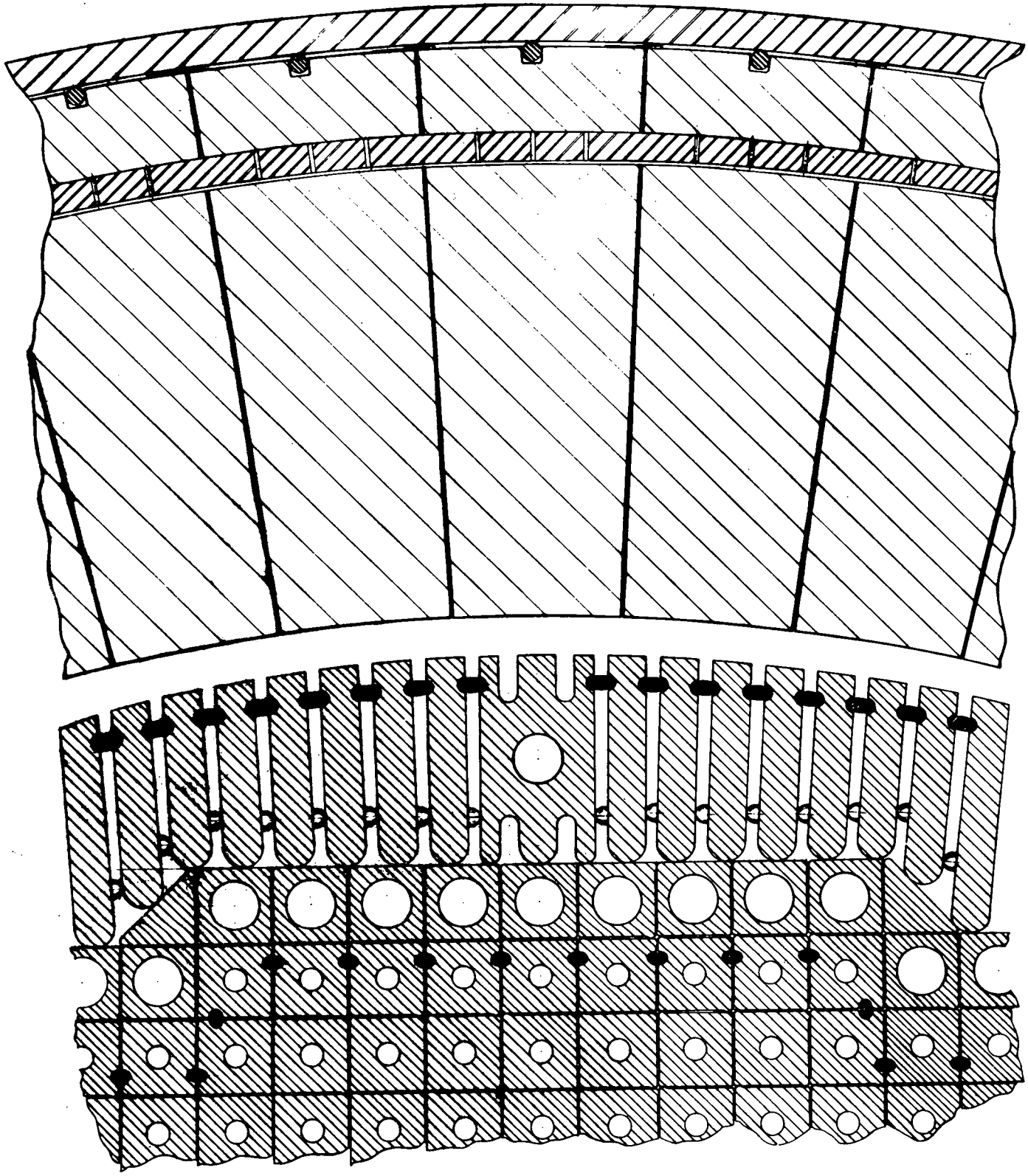

Figure 3.13. Plan View of Graphite Reflector and Moderator Elements

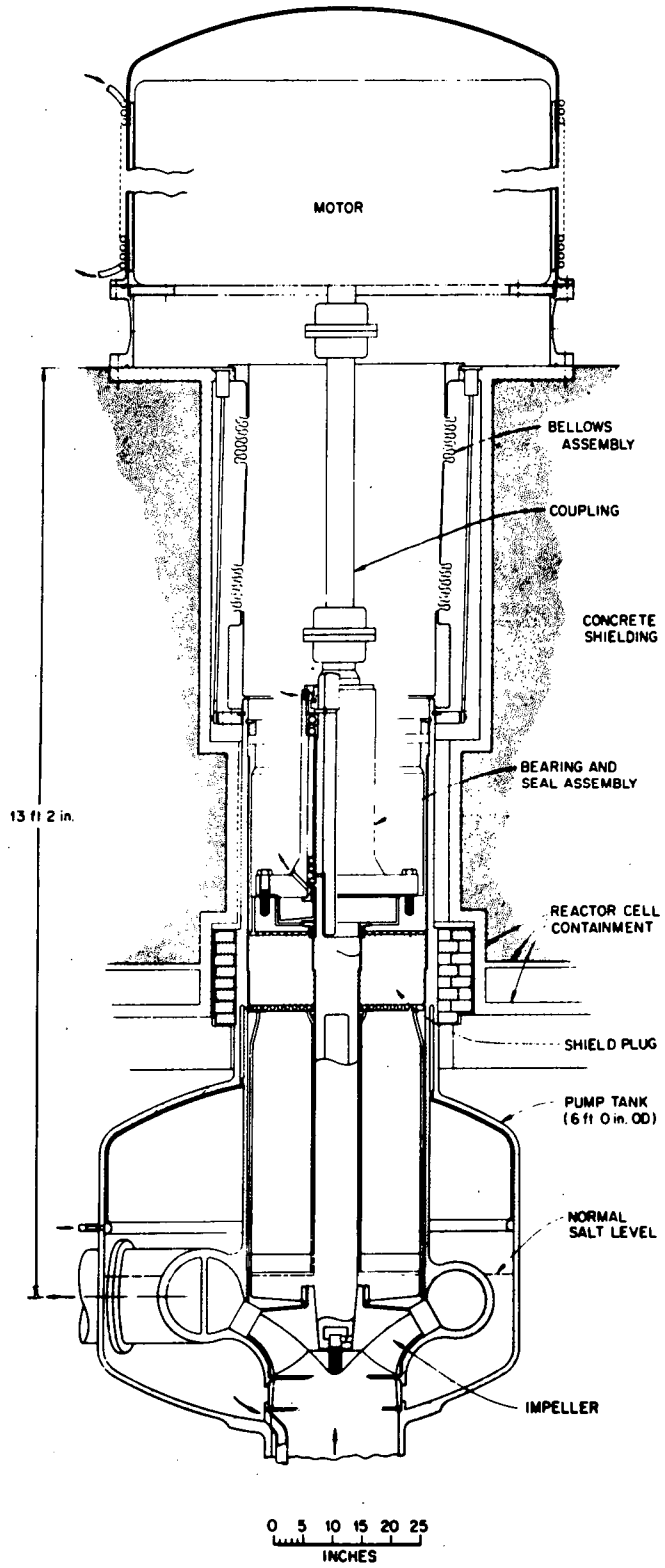

Figure 3.14. Primary Salt Circulating Pump

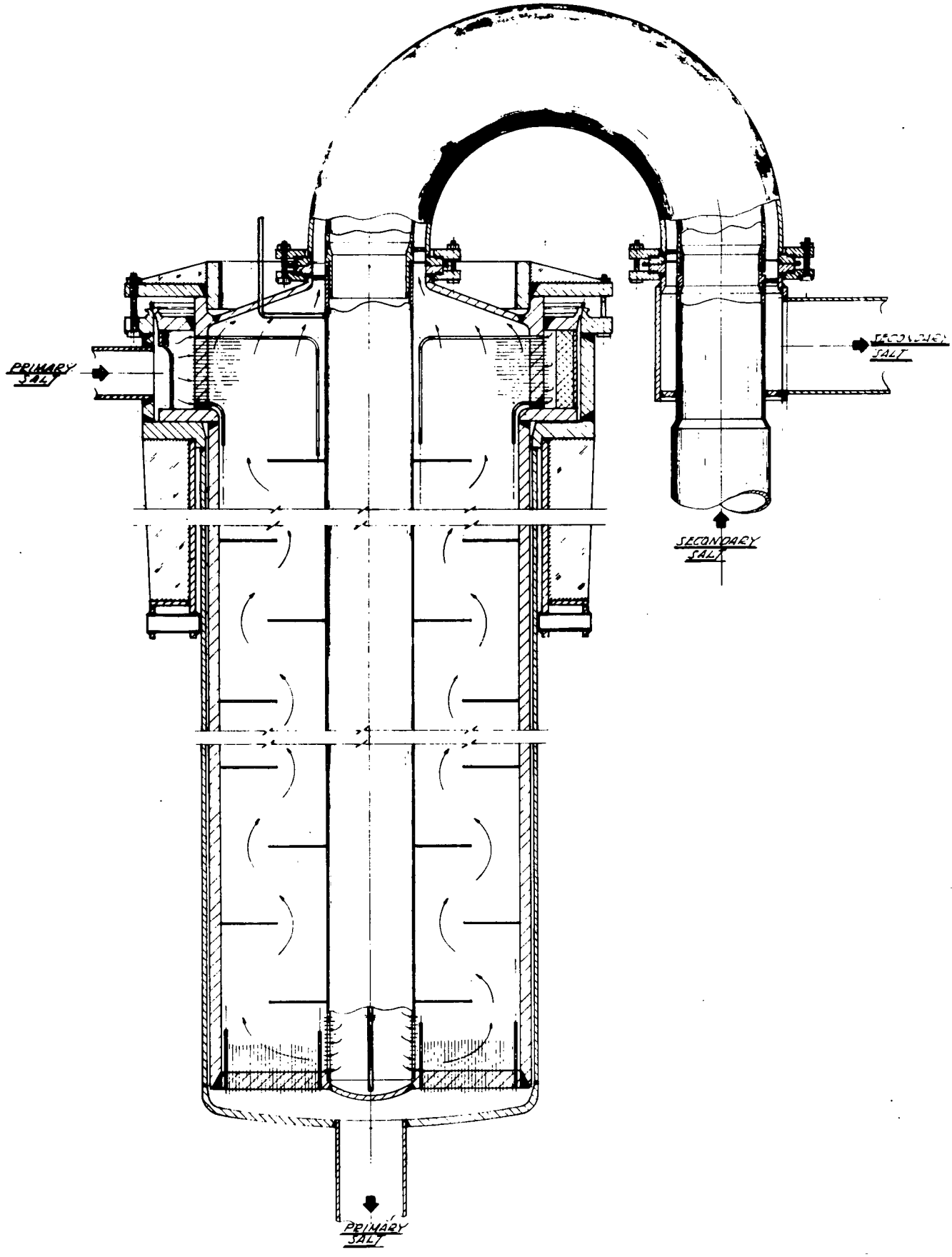

Figure 3.15. Sectional Elevation of Primary Heat Exchanger

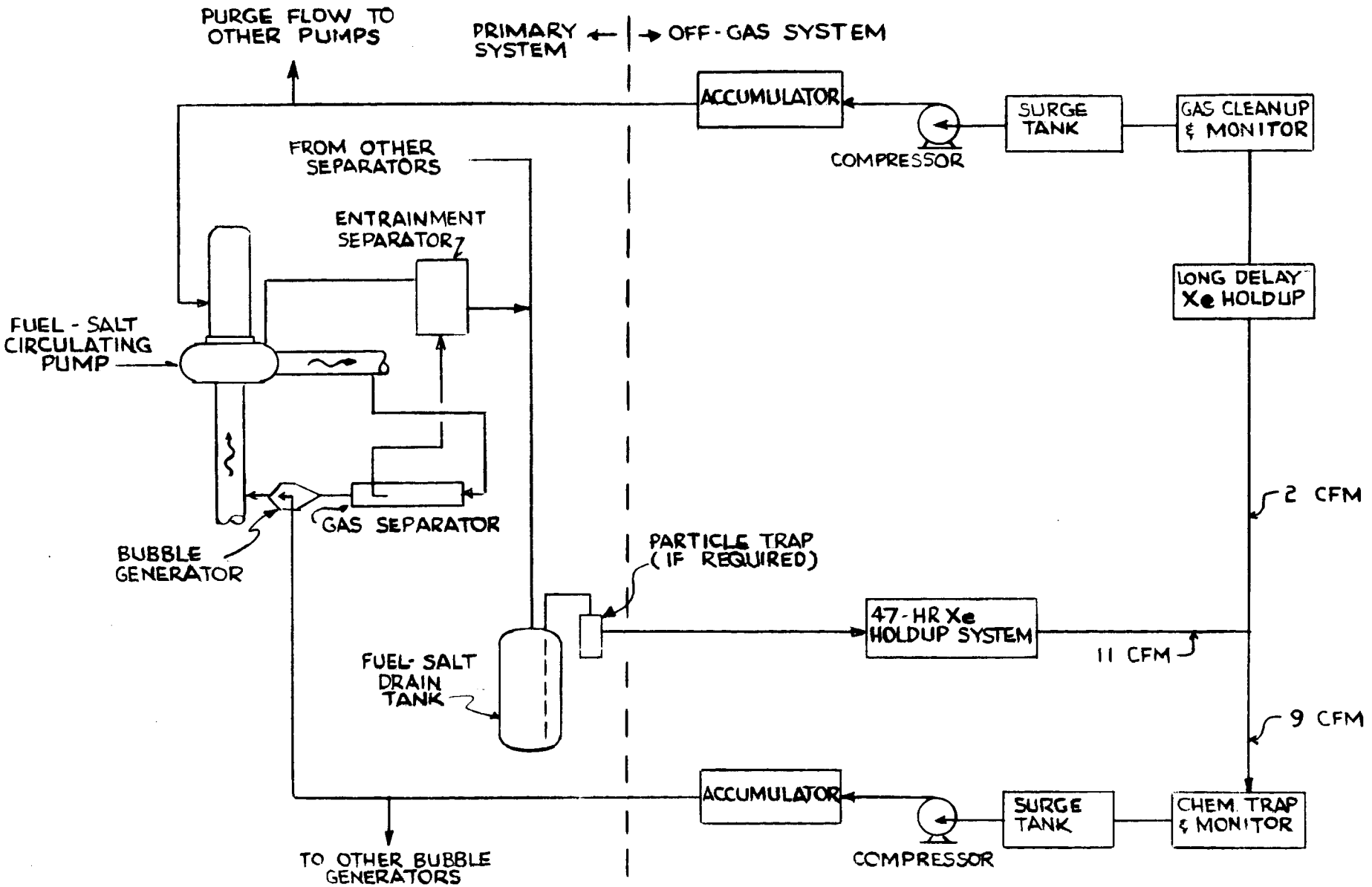

Figure 3.16. Schematic Diagram of MSBR Off-Gas System

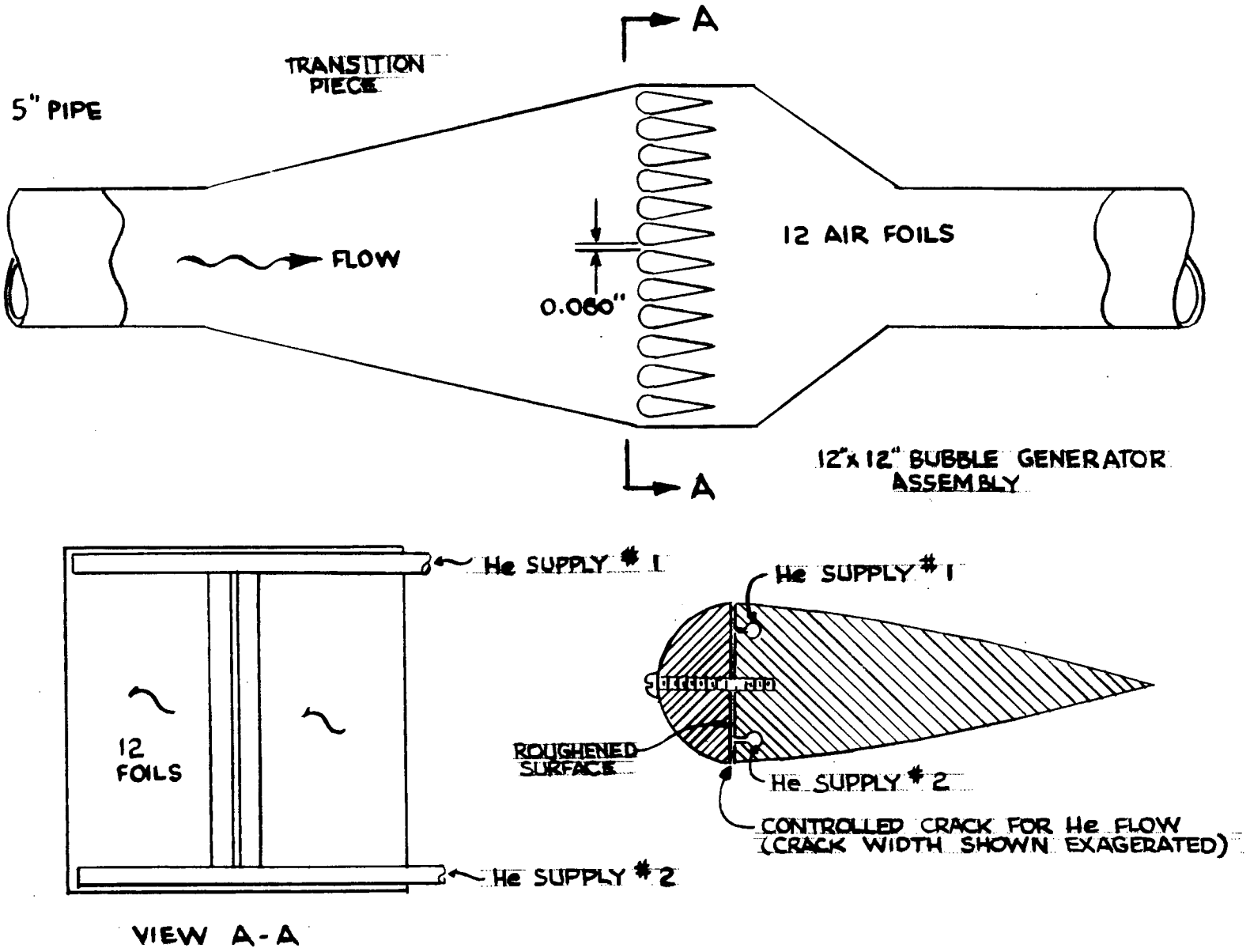

Figure 3.17. Preliminary Concept of MSBR Bubble Generator

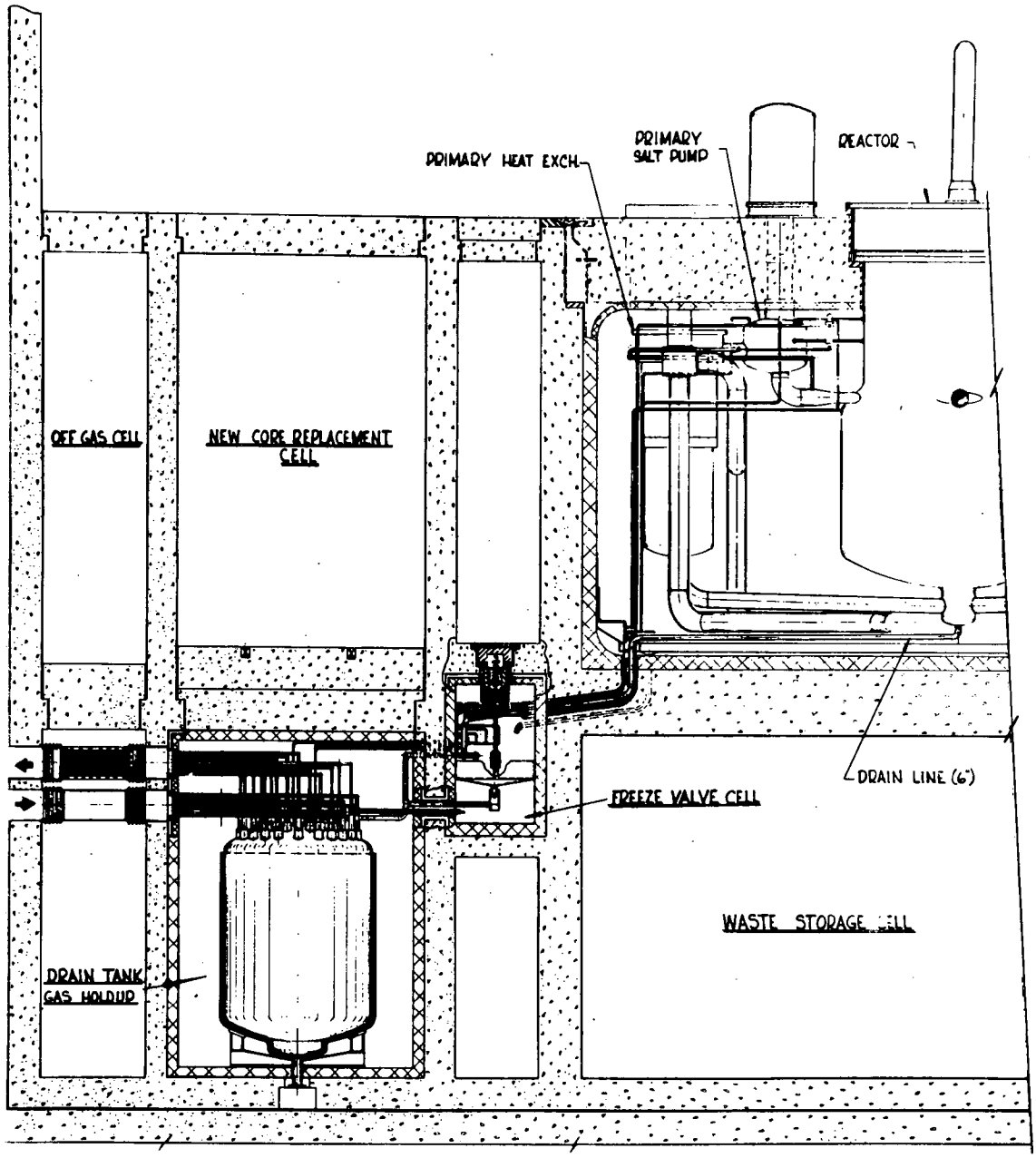

Figure 3.18. Elevation of Drain Tank Cell

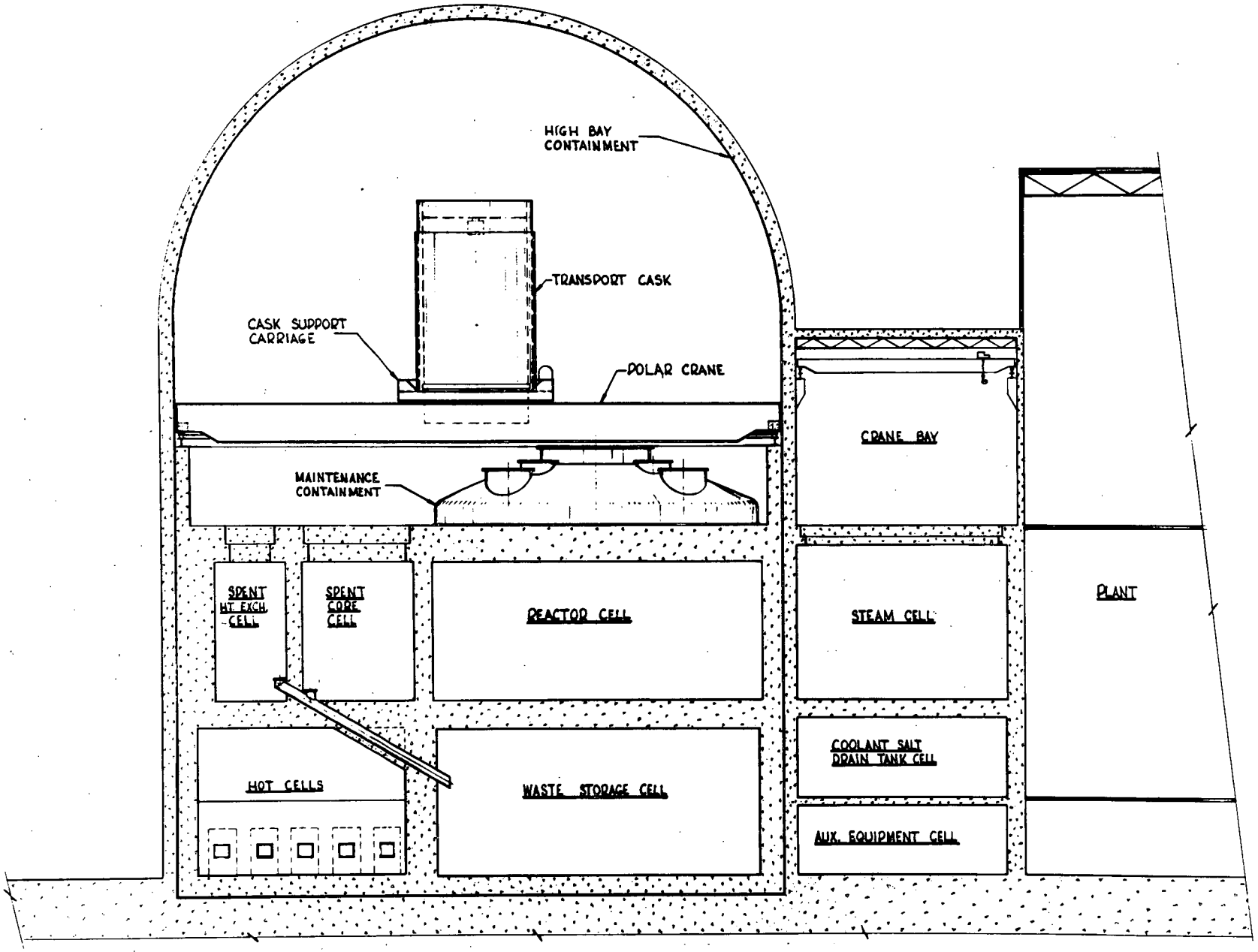

Figure 3.19. Sectional Elevation Through Reactor Plant Building

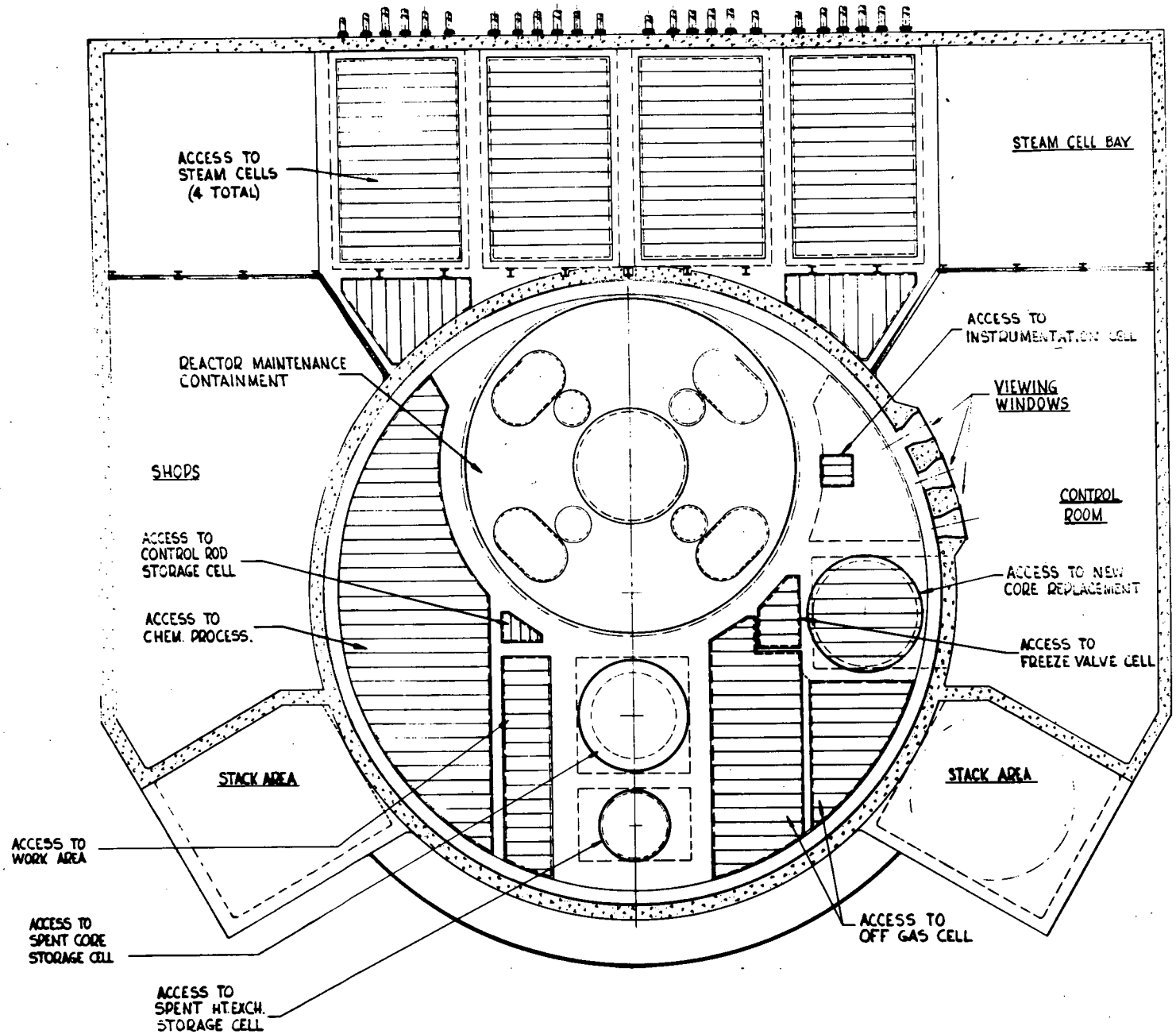

Figure 3.20. Plan View of Reactor Plant at Crane Bay Elevation

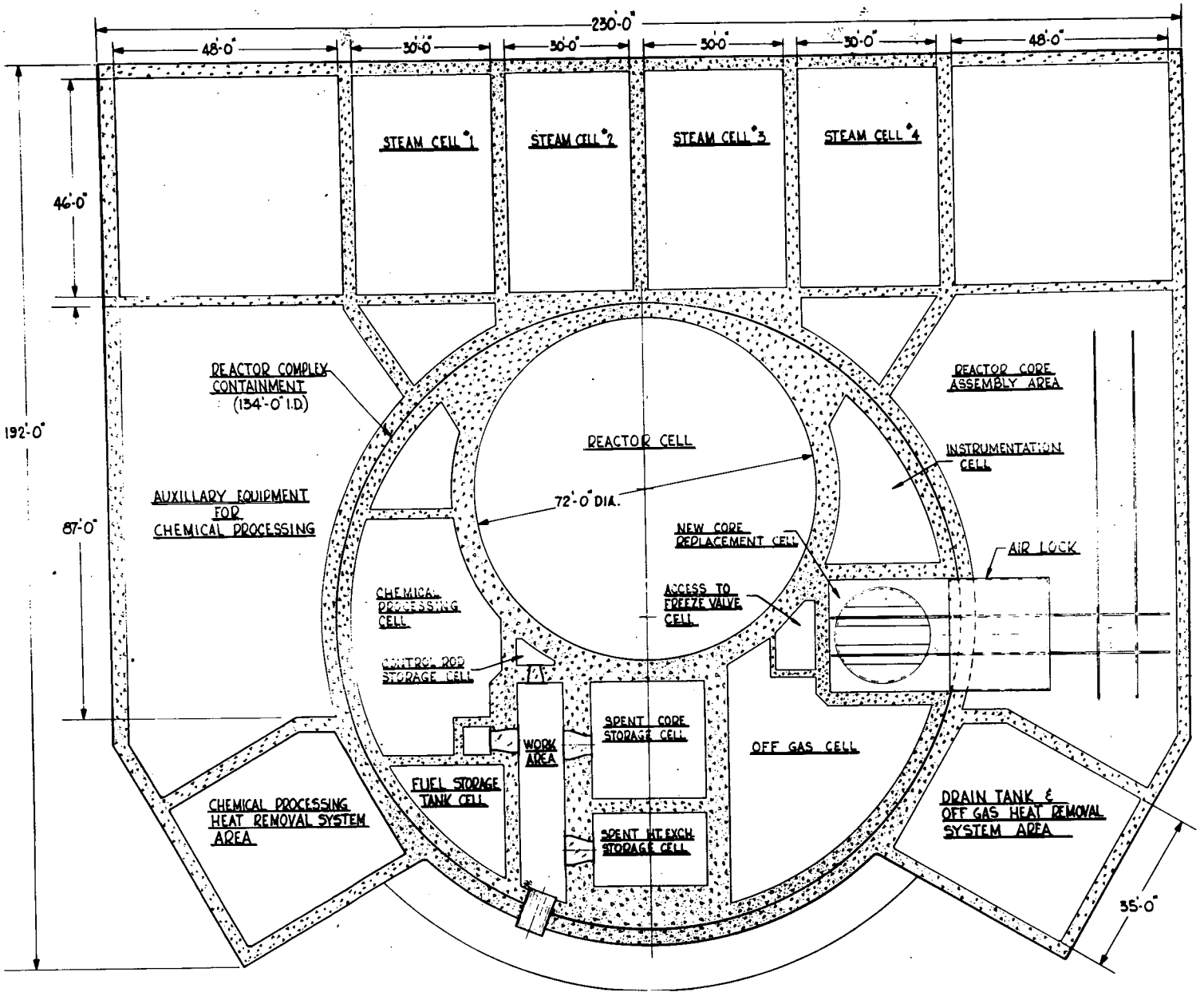

Figure 3.21. Plan View of Reactor Plant at Reactor Cell Elevation

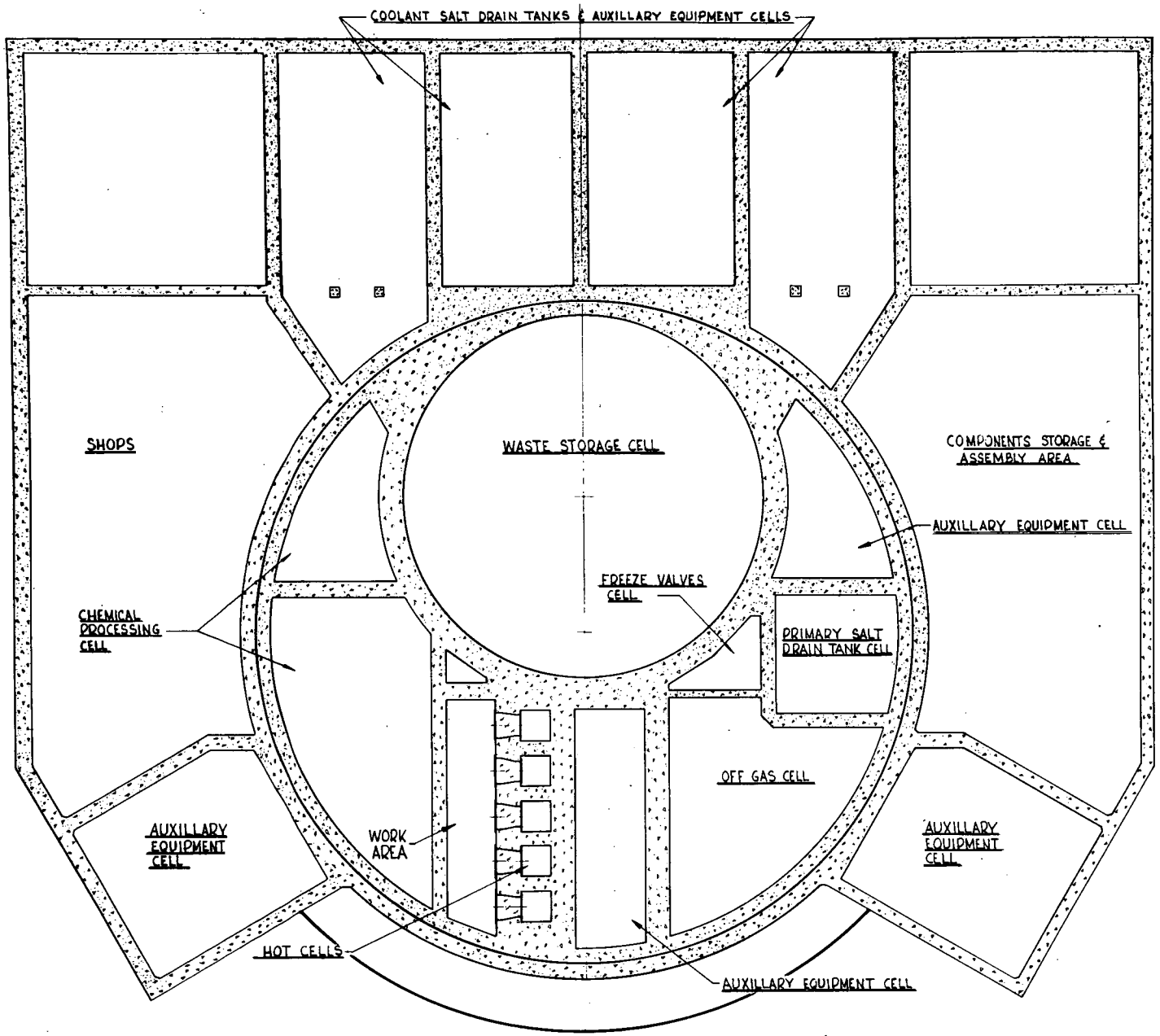

Figure 3.22. Plan View of Reactor Plant at Waste Storage Cell Elevation

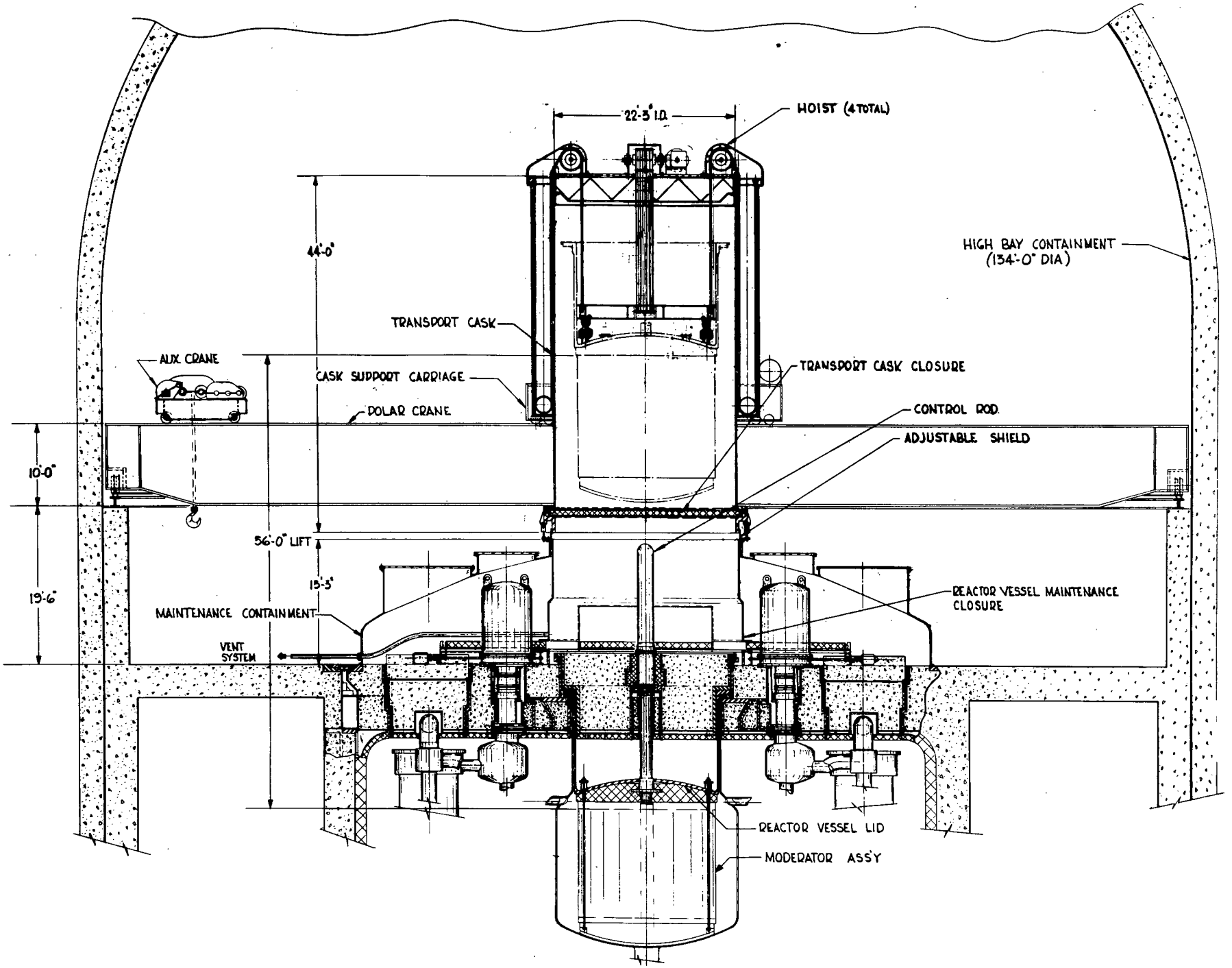

Figure 3.23. MSBR Core Assembly Transport Cask and Maintenance System

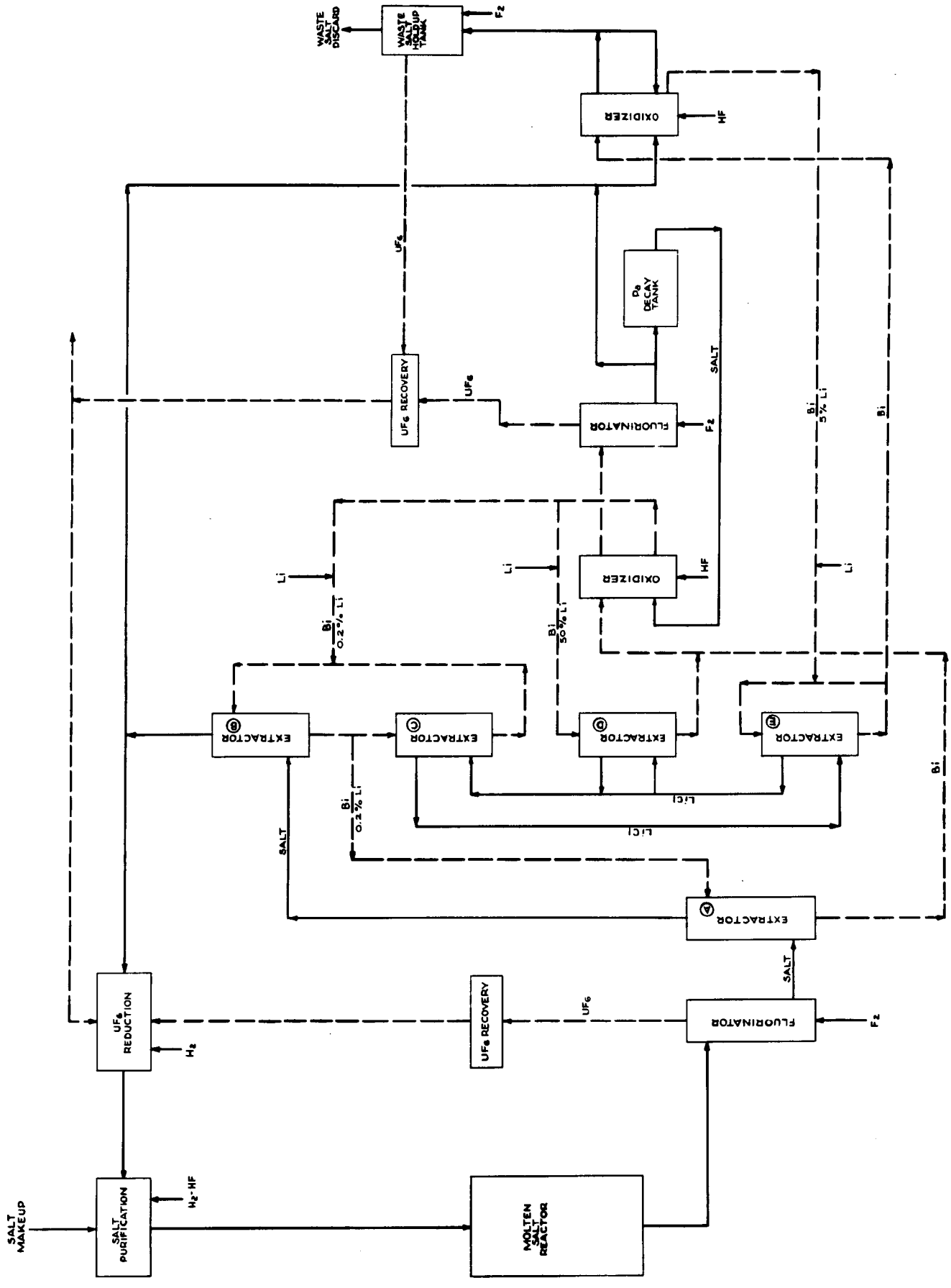

Figure 3.24 Chemical Processing System Flow Diagram

4.0 SYSTEM DESIGN CRITERIA

4.1 General Criteria

The Reference Concept is intended to reflect the high nuclear performance potential of MSBR's. Thus it is desired to be a moderately high performance plant which incorporates advanced technology. It is also desired to reflect the potential low fuel cycle cost inherent in MSR concepts via elimination of fuel element fabrication.

It is likely that a minimum of 15 years will lapse before MSBR's become commercially available; therefore, credit was taken for 15 years advance in technology. Thus, it was assumed that many technologies not now available will become available. For example, supercritical steam cycles will most likely be perfected; component fabrication with Hastelloy N will probably have been done by industries; many data not now available, but important to the engineering and design of MSR systems, will have been measured. It is assumed that known uncertainties and problem areas will be resolved with the anticipated results.

The resulting reactor concept is, therefore, a moderately high performance breeder having a continuously compounded fissile doubling time of about 20 years. To achieve this doubling time, it was necessary to reduce the fuel inventory as much as believed practical. As a criterion, each of the components and systems containing fuel salt is designed to contain little, if any, excess salt.

4.2 Specific Criteria

Power

The power output was set at 1000 MWe[1/]. Although arbitrary, this is a convenient value because it permits direct comparison with several other reactor concepts. This choice is appropriate in that it is consistent with current trends in both nuclear and fossile plants.

1/ USAEC Report ORNL-4541, "Conceptual Design Study of a Single Fluid Molten Salt Breeder Reactor," by Molten Salt Reactor Program Staff, June 1971.

4.2 Specific Criteria (Cont'd)

Plant Life

For design and amortization purposes ORNL assumed a minimum plant life of 30 years[1/]. It is acknowledged, however, that the mechanisms which ultimately limit the useful life of the plant have not yet been identified.

Graphite Replacement Interval

Because graphite suffers dimensional change under fast neutron irradiation, it has a finite useful lifetime in the reactor. Although optimization studies performed by ORNL suggest that 3.2 years is the optimum graphite lifetime[2/], four years was chosen for the following reason: ORNL consulted utility companies and concluded that ideally, they would prefer to shut down once every four years for low and pressure turbine maintenance and once every four years for low and high pressure turbine maintenance. It is desirable to minimize downtime by replacing the graphite during this scheduled outage. The target graphite lifetime was, therefore, chosen to be four years[3/].

The graphite lifetime is limited by total fast neutron fluence ($E > 50$ kev) and its temperature during operation. These limitations then influence the reactor design in two ways: First, to achieve a satisfactory fast flux the peak power density is limited. This, in turn, influences the reactor dimensions. Second, the graphite element must be designed, such that its peak temperature is satisfactory.

After having examined the effects of graphite limitations on the system design it is concluded that four years is indeed a reasonable, if not optimum, choice.

1/ USAEC Report ORNL-4541, "Conceptual Design Study of a Single Fluid Molten Salt Breeder Reactor," by Molten Salt Reactor Program Staff, June 1971.

2/ USAEC Report ORNL-4449, "Molten Salt Reactor Program Semiannual Progress Report," August 31, 1969.

3/ E S Bettis, MSRP Staff, ORNL, private communication.

4.3 Optimization: Conservation Coefficient

The reactor system is reported[1/] to be an optimized design. The figure-of-merit optimized is the so-called "conservation coefficient." As explained below, this figure-of-merit is a measure of high nuclear performance, i e, high breeding gain together with low fuel inventory. One of the objectives of the ORNL Reference Design was to show that MSBR's have the potential for high nuclear performance.

The conservation coefficient is defined according to

$$CC = (1-BR)P^2$$

where BR = breeding ratio

and P = specific power (MWt/kg fissile).

It can be shown that

$$CC \propto \frac{1}{T_D I}$$

where T_D = continuously compounded doubling time

and I = specific fuel inventory (kg-fissile/MWt). $= \frac{1}{P}$

It is clear that the conservation coefficient takes into account simultaneously the desire for a high breeding gain, a low fuel doubling time, and a low fuel inventory. The basis for the CC definition is as follows:[4/]

For a linear increase in nuclear power generation, the amount of natural uranium which must be mined for a system of breeder reactors, from the time they are first introduced until they become self sustaining, is proportional to $T_D I$.

Thus, a maximum CC gives rise to a minimum mining requirements.

Although the choice of CC as a figure-of-merit for high performance is arbitrary, it appears that optimization of doubling time or even breeding gain would lead to a similar design insofar as Th

1/ USAEC Report ORNL-4541, "Conceptual Design Study of a Single Fluid Molten Salt Breeder Reactor," by Molten Salt Reactor Program Staff, June 1971.

4/ Nuclear Applications and Technology, February 1970 (vol 8, No. 2) (entire issue).

4.3 Optimization: Conservation Coefficient (Cont'd)

and U concentrations, dimensions, and salt fractions are affected. It is, therefore, concluded that this design and the physics of this design are reasonably representative of realistic performance characteristics even if other figures-of-merit were to be optimized.

Of course, the conservation coefficient is affected by the choice of graphite lifetime. Small high power density cores will have low fuel inventories but high neutron leakage. Thus very small cores will have low breeding gains and, thus, low conservation coefficients. Conversely, very large low power density cores will have very little neutron leakage and, hence, high breeding gains; the inventory, however, will also be very high causing a low conservation coefficient. The conservation coefficient depends not only on core size and power density but anything which influences neutron economy and fuel inventory. Thus, size and configuration of the core, blanket, and reflector regions as well as salt fraction and salt composition influence the conservation coefficient.

5.0 REACTOR INTERNALS

5.1 Graphite Moderator Elements

The design of the graphite moderator elements (Figures 3.10, 3.11, 3.12 and 3.13) is an important consideration in MSBR design. They must satisfy the following criteria:

1 - Define the salt fraction

2 - Define flow channels

3 - Permit orificing

4 - Be sealable

5 - Be fabricable with adequate quality control

They must not break or permit regions of stagnant salt, separate or deform such that flow distributions change substantially.

Figures 3.10 and 3.11 show the graphite element for the core regions. There are two core element designs; one for the central core region (Zone IA), the other for an outer annular region (Zone IB). It can be seen that the elements have a square cross section with ridges on each surface. These ridges define flow channels along each surface. The moderately sharp contact points prevent stagnation. The central circular flow channel is orificible and prevents the center of the 4 in. x 4 in. element from overheating.

The rectangular flow channels are not orificible; thus the temperature rise in these channels will be proportional to the radial power distribution. The central element requires a salt velocity of about 8.5 ft/sec for a temperature rise of 250 F. Since most of the heat is generated within the fuel salt, the required velocity is independent of the flow channel geometry and thus applies to both rectangular and circular channels. This flow velocity gives rise to a pressure drop of only about 18 psi across the core. The Reynolds Number is about 10^4 - the region in which the friction factor is nearly independent of surface roughness. The central hole

5.1 Graphite Moderator Elements (Cont'd)

in core Zone IA, like the rectangular flow channels, is not orificed. Thus, the temperature rise across the core for all Zone IA flow channels varies as the power density.

At some, as yet, undetermined radius, the transition is made to core Zone IB which also has 13.2 vol percent salt. The elements used in Zone IB differ from those in IA in that they have much smaller rectangular flow channels and larger central holes. The purpose of this transition is to maintain a more uniform outlet temperature. Because the rectangular flow channels are reduced in cross sectional areas by a factor of 3, the flow velocity is reduced by a factor of $\sqrt{3}$ and, hence, the temperature rise (ΔT) through these smaller channels would be $\sqrt{3}$ times larger than Zone IA type elements in the same position. Depending on the radius of transition from Zone IA to IB, it is possible and likely that the outlet temperature from the rectangular channels of some of the IB type elements will be considerably greater than 1300 F. Because about 95 percent of the mass flow associated with a single IB type element is thru the center hole, gross temperature control can, in principle, be affected by orificing this hole. These holes will be orificed individually to give a mixed-mean outlet temperature for each element of about 1300 F, with as little variation from one element to another as practical.

ORNL concedes that because their analyses are incomplete, it is not yet clear if only two geometries can span the entire core. Since the power density changes by a factor of about 6.5 from core center to core edge, three or possibly four element designs may be required to give an overall outlet temperature of 1300 F without operating some elements at excessive temperatures.

5.1 Graphite Moderator Elements (Cont'd)

Although this design satisfies most of the previously mentioned criteria, we have concluded that it is not attractive because of the difficulty of sealing the inner surface. This seal would be nonuniform (thicker at the ends where it is needed least) and probably impossible to inspect. We do believe, however, that other, simpler, geometries which require only external seals are possible.

Another aspect of the element design which we find questionable is the outlet plenum associated with design. The upper plenum is 3 in. deep and contains 85 vol percent salt. We have examined the flow conditions in this plenum and feel that operation with three pumps would be undesirable except at very low power. True plena would permit 75 percent of full power operation with three pumps.

Figure 3.13 shows 2 in. thick x 13 ft long slats which are moderator elements in the blanket region and supports which hold the entire graphite matrix of the core together. The slats are separated with eliptical dowels which prevent salt flow toward the annulus. The slats are clamped at top and bottom by graphite rings shown in Figure 3.9. This arrangement of slats and dowels does not provide a stable, well defined geometry. Coordinated movement within the combined tolerances could permit leakage from the annulus to the blanket region.

In addition, radiation induced shrinkage of the graphite coule permit one dowel rod to become dislodged. Should this occur, disassembly could propagate about one-quarter of the way around the core. All flow control in the blanket and annulus would be lost. We do believe, however, that a simple, satisfactory design is possible.

Figure 3.13 also shows the salt annulus, the reflector graphite, and the vessel. This portion of the concept appears sound.

5.1 Graphite Moderator Elements (Cont'd)

The primary purpose of the annulus is to provide clearance between permanent and replaceable graphite. ORNL chose a clearance of about 2 in. Since the core is to be placed remotely as a unit, 2 in. is probably the minimum clearance required. If smaller clusters of elements were to be replaced, perhaps a smaller clearance would be appropriate, and the potential problem of disassembly of the dowels and slats may vanish.

The reflector graphite blocks are unsealed, separated by graphite ridges, and restrained against the vessel by a Hastelloy N band as shown in Figure 3.1. This portion of the conceptual design appears entirely satisfactory. It is intended that a small amount of cool salt will flow upwards between the vessel and the reflector, and inwards between the graphite blocks to the annulus. The flow between the blocks can easily be controlled by slotted Hastelloy N orifice plates located on the outside surface of the blocks. These plates provide stable flow control holes.

Thermal-hydraulic analyses will be required to determine with certainty the spacing, the orificing, the block dimensions, and the clearance between blocks and vessel for adequate cooling.

The cooling requirements for normal operation and for a drained core (soon after power operation) differ greatly. During normal operation most of the heat produced in the reflector region results from fissions in the salt. Neutron scattering and decay of fission gases in the graphite do, however, produce enough heat to limit the block sizes so that temperatures are satisfactory. Following a sudden salt drain there is no way to get rid of residual decay heat except by circulating gas (under pressure) with the primary pumps or by filling the system with a flush salt.

5.1 Graphite Moderator Elements (Cont'd)

It is doubtful if the pumps will circulate enough gas through the reflector blocks. Thus, either a flush salt must be available, or the probability of suffering such an event must be made acceptably low.

5.2 Graphite Replacement

Figures 5.1 and 5.2 show conceptually how ORNL proposes to replace the core and blanket graphite. This scheme involves lifting the entire core and blanket assembly together with the upper and lower axial reflectors, the top head, and the lower Hastelloy N disk which supports the entire assembly. The lower disk and reflector are replaced each time. Two upper heads are required; one in service, the other available for becoming a part of a new assembly.

The philosophy of replacing the entire core as a unit is objectionable for the following reasons:

1 - The size and expense of the core cask are large.

2 - Consequences of machinery failure during the removal procedure are serious.

3 - Unless the power distribution is flattened, only a small portion of the graphite will reach its allowable fluence.

These problems are largely circumvented if graphite is replaced in small assemblies.

ORNL-DWG 70-11908

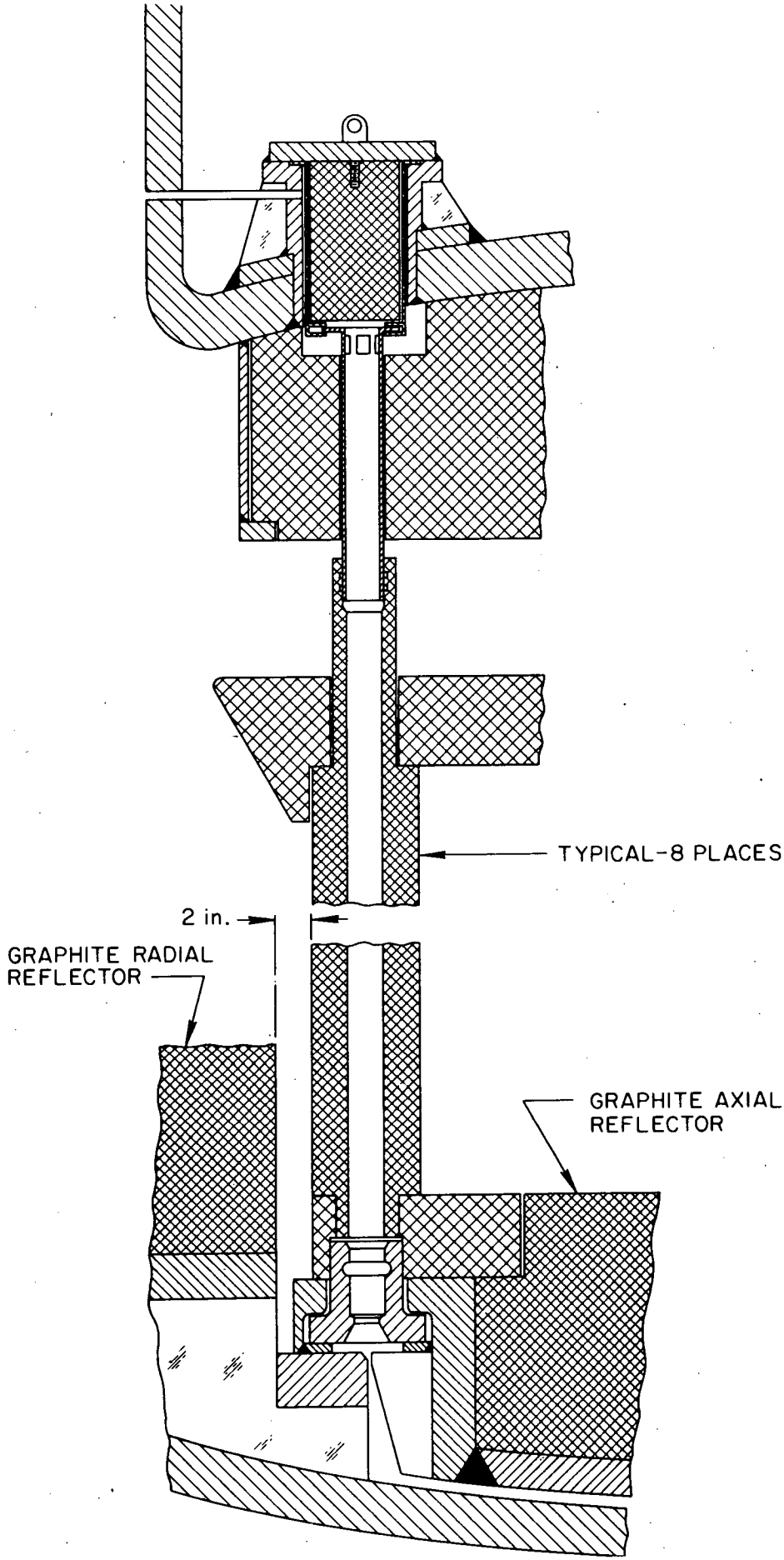

Figure 5.1. Core Lifting Rod Access Holes

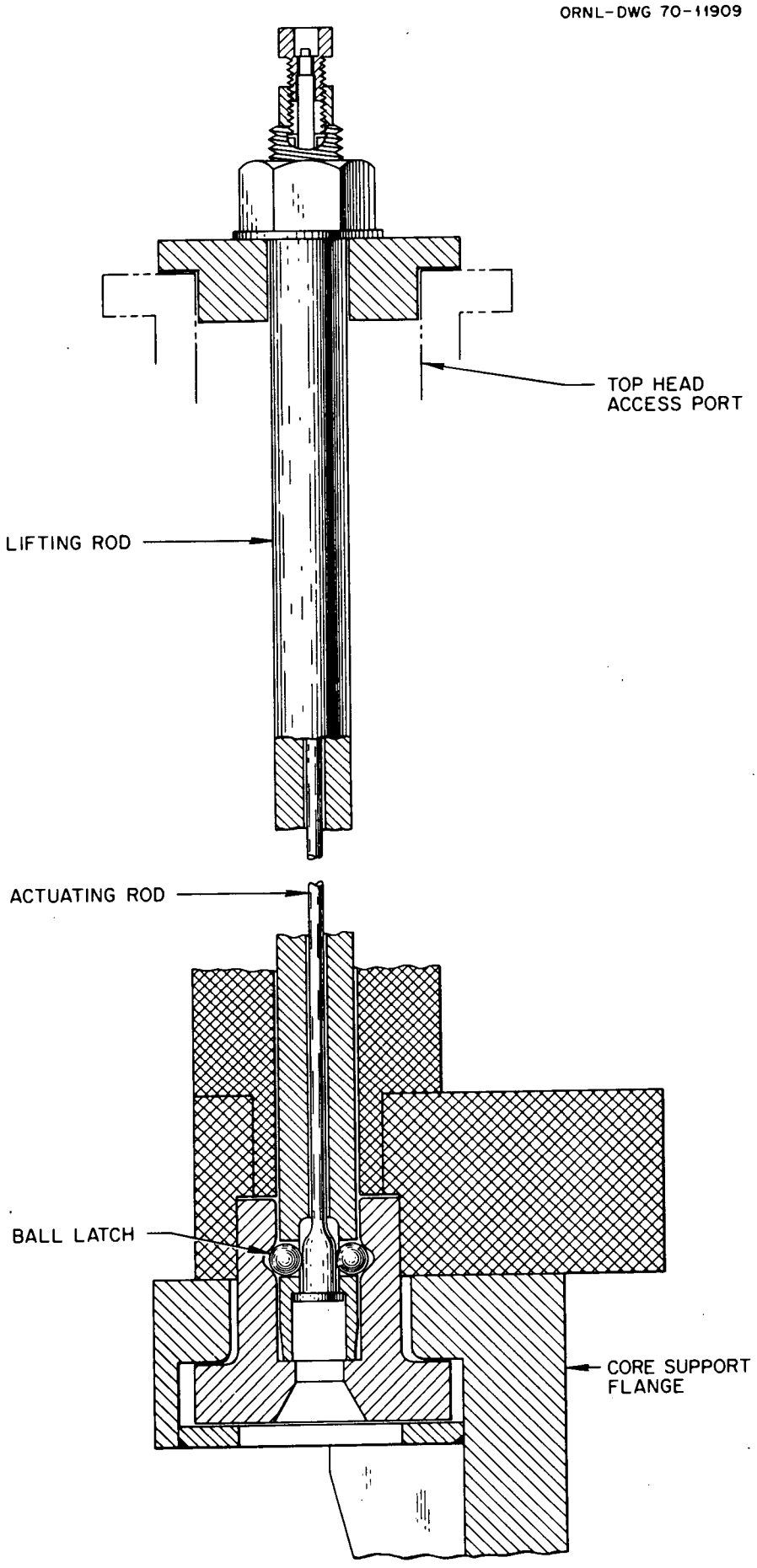

Figure 5.2. Reactor Core Lifting Rod Assembly

6.0 MAJOR COMPONENT EVALUATIONS

6.1 Introduction

A qualitative review of the reactor vessel, primary heat exchanger, steam generator, reheater and mechanical pump was performed.

The objectives of this study were (a) to assess the technical feasibility of these concepts, (b) to define problem areas, and (c) to evaluate the criteria or rationale used by ORNL to arrive at these design configurations.

There are many variables which can affect the conception of a particular component. Among these are size, type, orientation, requirements for maintenance, performance requirements and other system interfaces. It is recognized by MSG, that an optimum plant reference design should thoroughly evaluate these parameters and requirements prior to the establishment of a design basis for each component. Therefore, this review evaluates only the ORNL component concepts without making comparisons to possible alternate designs. It does, however, point out potential trade-offs and considerations associated with the choice of reference design components so that future work can utilize the evaluation as a starting point toward selection of component designs.

6.2 Reactor Vessel

This evaluation consists of a review of mechanical design, thermal-hydraulic design and fabricability.

The reactor vessel concept is shown in Figures 3.8 and 3.9. It is constructed of a modified Hastelloy N material and is about 22 ft in diameter and 20 ft in height. The vessel has a design temperature of 1300 F and is subjected to an accumulated fast fluence ($E > 0.1$ Mev) of less than 1×10^{21} neutrons/cm^2, and a thermal fluence of about 5×10^{22} neutrons/cm^2. These fluence levels are significantly higher than any utilized for reactor vessel design in the past, but are too low to produce swelling or serious void formation such as that expected for vessel internals in the LMFBR. However the use of a high percent nickel alloy metal

6.2 Reactor Vessel (Cont'd)

may require further evaluation. The design pressure of 75 psi results in a vessel wall thickness of 2 in. and dished heads 3 in. thick.

Operating conditions are 1050 F inlet temperature and 1300 F outlet temperature.

Major considerations in the design of the vessel are:

1 - The core must be replaceable without undue difficulty.

2 - The holdup of fuel salt in nozzles, plenums and other volumes exterior to the core should be minimized because of doubling time requirements.

3 - The vessel must meet ASME Section III Class A requirements.

4 - The vessel must provide for uniform inlet and outlet flow distribution.

6.2.1 Mechanical Design

The review of mechanical design considers vessel arrangement, ability to withstand thermal stresses, and mechanical loads.

6.2.2 Vessel Arrangement

Support

The vessel is top supported by flanges attached to the vessel shell by two long cylindrical skirts. The length of the skirt would have to be sufficient to allow the effects of the radial expansion of the main vessel shell to decay along the skirt length so that large stresses are not imposed between the flanges (which run cold) and the main vessel (which will be hot). Preliminary analysis shows that a generous skirt length was used by ORNL and for conceptual purposes, the vessel support scheme appears adequate for operating conditions. This assumes, of course, that the skirt may be selectively insulated and/or cooled to maintain a linear axial temperature gradient.

6.2.2 Vessel Arrangement (Cont'd)

Support (Cont'd)

The support scheme will probably require some modification after seismic conditions are evaluated. The modification may take the form of earthquake keys near the bottom of the vessel or a midplane support.

Although the support scheme appears possible in concept, further analysis is warranted to evaluate the interaction effects of dead load, thermal differences, pressure load and bolting for the design prior to firming up the concept. It is believed that the concept can be made to work, although it may be difficult to affect an aseismic design.

Internals

The present concept shows an internals arrangement (Figures 5.1 and 5.2) where the core assembly (core support flange) rests on a ledge at the lower end of the vessel. It appears that the alignment of the ball latch socket in the support flange is critical if a straight rod is to be inserted in the lifting rod port in the vessel cover down through the vessel.

Since the support flange is a machined part, stresss relief at the high operating temperature could cause distortion of parts in this area to the point where core removal may be impossible. In addition, to the mismatch possible due to stress relief, the ability to lift a core of this size (13 ft high and 14 ft in diameter) and weight (240 tons) will require that careful attention be paid to preclude the chance of pendulum action and resulting damage to the nonremovable reflector.

The internals should be studied in some detail to assure that these potential problems and uncertainties are solvable, since it is important that the reactor core be removable.

6.2.2 Vessel Arrangement (Cont'd)

General

The remainder of the reactor arrangement is simple and practical and no real problems of arrangement apparent. However, problems with thermal stresses and flow distribution may cause a revision of the arrangement whereby more review will be warranted.

6.2.3 Thermal Stresses

The areas of significant concern in the reactor vessel design are the inlet and outlet nozzles, the juncture of the flange skirt and closure head, the core support flange, and the vessel wall.

Nozzles

The four inlet and four outlet nozzles will be considerable design problem areas. The inlet nozzles join a cylindrical chamber on the bottom of the reactor vessel. This chamber is small in diameter compared to the area of the inlet nozzles so that any transients occurring in one loop, such as loss of a secondary coolant pump will have to be felt by the chamber as abnormal temperature differences between the inlet nozzles. If one of the nozzles become significantly hotter or colder than the others, severe thermal stresses can result. Therefore, the design objective of minimizing this plenum size may have a deleterious effect on design reliability.

For the outlet nozzles (and the inlet nozzles to a lesser extent) the main concern will be thermal fatigue at the high temperature. It may be necessary to cool the outlet nozzles so that higher values of design stress intensities may be used. Thermal sleeves may be helpful although their use doesn't eliminate the problem. It is possible that a combination of nozzle cooling and thermal sleeves may be used.

6.2.3 Thermal Stresses (Cont'd)

Vessel Walls

The vessel walls are cooled by a bypass flow of salt which flows through a 1/4 in. annulus between the radial reflector and vessel wall. Although a minimum salt volume is desirable to minimize fuel inventory, too small a gap may cause flow maldistribution which would result in thermal stripping of the vessel wall.

Another problem with a bypass scheme is the fact that the mass flow required for bypass cooling is not constant with load; however, the bypass will be a constant percentage of the total mass flow. If careful attention is not paid to the full load range of design, the bypass design could have an effect on the thermal efficiency of the plant.

Removable Head/Flange Skirt Transition

The junction of the upper head and the skirt at the top flange will be a critical area because of the high temperature (1300 F outlet fluid) bathing the area and the pressure effect. Secondary and peak stress effects may be above the allowable limit but redesign should be possible. It should be noted that redesign of this area may have effect on the upper reflector and lifting scheme.

Similar comment can be made about the necked down section of the vessel which will experience similar operating conditions. The neck may be a critical area, and will require some analysis before a decision can be made as to its feasibility. It may be possible that the neck will have to be made more flexible. If this is true, it will have to be made larger thus approaching a point where it may not be useful for its intended purpose - to decrease the salt volume.

6.2.4 Thermal-Hydraulic Design

From a fluid flow viewpoint, the vessel arrangement leaves much to be desired. Significant problems are described below.

Inlet Region

The inlet area of the vessel is made up of four inlet pipes penetrating a cylindrical inlet chamber. Exiting from this chamber the flow splits, the main part of the flow going up through a central hole in the graphite reflector with a small portion bypassed between the reflector and the vessel wall. With this design there is not a very good plenum for flow distribution in the reactor core inlet area, and poor flow distribution could be expected. This will be a major design problem because of the objective of minimizing the fuel salt volume. An ideal situation in most reactors is the presence of a very large inlet plenum to permit good mixing of the fluid and channel it with uniform velocity profile into the core area.

The best approach to this problem may be the construction of a flow model rather than extensive fluid studies, which may not be sufficiently conservative.

Vessel Wall Cooling Bypass Flow

As mentioned in the previous section on thermal stresses, it will be very difficult to insure uniform flow distribution between the vessel wall and graphic reflector. This is due to the design objective of making the annulus as small as possible and also because of possible dimensional variations during manufacture.

A good deal of investigation is warranted in this area because the plant capacity depends on minimized bypass flow.

Outlet Region

It is very difficult to determine whether the outlet region is properly designed to permit good flow distribution.

6.2.4 Thermal-Hydraulic Design (Cont'd)

Outlet Region (Cont'd)

Good flow distribution at the outlet is essential so that good flow distribution can be insured in the core region. Maldistribution can be fed back and affect the core flow. It is doubtful whether the plena shown on the section elevation of the vessel are adequate to insure this good flow distribution. It can probably be stated with confidence at this time that larger outlet plena will be required. Unfortunately, this will be at the expense of the fuel salt volume minimization.

Core Region

The thermal-hydraulic problems in the core region will not be treated in much depth in this review which is primarily a review of component problems. However, since the geometry is new and since little experience exists for this particular type of core, it will be necessary to conduct analytical investigations and flow models to assure that good flow distribution is obtainable and that harmful vibrations wont't be present in the core.

6.2.5 Fabricability

Based on a review of the reactor vessel concept, there are several areas where comments are appropriate on the fabricability of the vessel. The comments are as follows:

1 - Because of the size of the reactor vessel, and the hypothetical site location which is not near any major waterway, the vessel will have to be field fabricated. While field fabrication is not technically undesirable for this type of vessel, it will be desirable to minimize the amount of field machining and assembly.

6.2.5 Fabricability (Cont'd)

2 - The vessel internals, particularly the core support flange face and ledge, will require tight tolerances in the present design concepts.

3 - This vessel will be very flimsy and hard to handle either in the shop or in the field. While it is realized that close tolerances (approximately 1/2 in.) on the diameter of the vessel will be required with the present bypass cooling concept, these tolerances will be very hard to hold during and after fabrication. This is due to the possibility of distortion after stress relief. It is conceivable to machine the entire length of the shell. However, this would be a very costly and time consuming process and would leave stresses in the material which, when relieved, could cause distortion of more than 1/2 in.

4 - Although no major problems are anticipated from the welding point of view at this time, there has not been enough investigation to assure that all of the welds necessary for the vessels can be made. In addition, there is little or no commercial practice with Hastelloy N in nuclear industries, and welding procedures will have to be qualified.

5 - A conical section in the reactor vessel shell will be extremely difficult to fabricate without having a fluted appearance. The flutes may be undesirable with the high temperature cyclic operation of the nozzle outlet regions; therefore further study is desirable to try to eliminate the conical section if possible.

6.3 Primary Heat Exchanger

The primary heat exchanger concept for the 1000 MWe electric MSBR is shown on Figure 3.15. The heat exchanger is a tube-in-shell counterflow design in which the primary fuel salt is located on the tubeside of the unit and the secondary coolant salt is located

6.3 Primary Heat Exchanger (Cont'd)

on the shell side. The unit is vertically oriented and top supported. Apart from the normal requirements for a heat exchanger (that of accommodating the heat transfer and pressure drop, required for the system), this heat exchanger has some unique requirements, as follows:

1 - The volume of the fuel salt in the heat exchanger must be kept as small as possible to minimize the fuel doubling time for the reactor.

2 - The heat exchanger must be arranged for relatively easy tube bundle replacement by means of remotely operated tooling. This is due to the highly radioactive nature of the fuel salt and the tube bundle.

3 - All portions of the heat exchanger in contact with the fuel or coolant salt must be fabricated of Hastelloy N or modified Hastelloy N.

4 - Because of the high velocity head of the working fluid (about 4 times the density of water), flow velocities, baffle thickness, tube clearances and baffle spacing must be given particular attention in order to minimize the possibility of flow induced vibration.

5 - The design must meet general requirements for locations of nozzles, pipe, secondary pipe work, and other system interfaces which effect the design.

This design concept is basically in accordance with these design requirements. The units are almost 6 ft in diameter and about 22 ft long, not including the coolant salt U-bend piping at the top. A list of data is given on Table 3.1. The fuel salt enters the top of each unit at about 1300 F and exits at the bottom. The coolant salt enters the shell at the top, flows to the bottom through a 20 in. diameter central downcomer, turns and flows upward to modified disc and donut baffling and exists through a 28 in. diameter pipe concentric with the inlet pipe at the top. The coolant salt is heated from 850 to 1150 F in process. With

6.3 Primary Heat Exchanger (Cont'd)

the temperature conditions, logarithmic-mean-temperature difference is equal to 175 F. The approximately 6000 Hastelloy N tubes are arranged in concentric rings in the bundle with constant radial and circumferential pitch. This is the only practical process of arranging tubes with the large sinusoidal bends in the upper area. The tubes are "L" shaped at the top with a sinusoidally bent section of about 4 ft in the upper portion of the tubing. This is conceived to absorb differential expansion between the tubes and the shell of the unit. Without baffles, the upper section of the tube bundle experiences essentially parallel flow and relatively lower heat transfer performance.

In the ORNL concept the baffle section of the heat exchanger contains tubes having a helical indentation knurled onto the surface to enhance the film heat transfer coefficients and thus reduce the fuel salt inventory in the heat exchanger. A unique feature of this design is that the upper and lower tube sheets are welded to a cylinder with a 2-1/2 in. wall thickness that gives rigidity to the tube bundle for transport. It also provides a gamma shield for the shell and forms a 1/2 in. wide passage between it and the shell for downward flow of a portion of the fuel salt to cool the shell. Another unique feature is that the heat exchanger is mounted on a gymbal type joint which is supported from the cell roof structure. This permits rotation to accommodate unequal thermal expansions in the inlet and outlet pipes.

The evaluation of the primary heat exchanger will concentrate on mechanical design, thermal hydraulic design, and fabricability.

6.3.1 Mechanical Design

Previous studies on LMFBR intermediate heat exchangers show that this component is one of the more critical in the design of the overall reactor plant. This is primarily because the effects of high temperature operation and thermal cycles are felt more in this unit than in any other component in the plant. Therefore, a good design of the IHX is an

6.3.1 Mechanical Design (Cont'd)

essential feature for a reliable molten salt breeder reactor. The problems under mechanical design can be classified under the major components of the heat exchanger, that is, the inlet nozzles, tubesheets, tube bundle, shells, and heads, and the outlet nozzles.

Inlet and Outlet Nozzles

The same comments that were made about the reactor vessel outlet nozzles can be made for the intermediate heat exchanger inlet nozzles, because the same thermal and mechanical loads are present in these areas. Nozzle location and design is an important feature of the heat exchanger concept because it can substantially effect the design fabricability, maintainability and performance. A good approach to the design of the nozzles is to combine these requirements with the mechanical design requirements caused by the high temperature cycling affects. The result of this can be a good conservative design with low stresses and good flow distribution.

Tubesheets

Tubesheets will be an extremely critical area of the design. This is because of the high logarithmic-mean-temperature difference which subjects the tubesheets to high temperature gradients across their thicknesses. Conservative design would place these as skin effects for the maximum possible stresses. If this was done it is felt that the design LMTD would be limited to a lower value than the present 175 F. However, more study is required to substantiate any conclusions with relationship to tubesheet. ΔT.

Adjoining the tubesheet area are some other critical areas of the design. The interaction analysis between the cylindrical upper tubesheet and the secondary outlet area, may show unacceptable stress levels. The inlet plenum surrounding these upper cylindrical tubesheets will also be critical area of design because of the thick sections and high

6.3.1 Mechanical Design (Cont'd)

Tubehseets (Cont'd)

temperatures involved. Tubesheets of this design are often thought of by designers in order to minimize tubehseet thickness where material prices are high. However, there are certain thermal problems associated with flow distribution which causes concern over the reliability of such a unit. More study is warranted before conclusions can be reached as to whether a cylindrical tubesheet is a good choice for the design. The bottom tubesheet does not experience as severe thermal and mechanical stresses as the top tubesheet. However, the junctions between the shell shield, and downcomer pipe will be critical areas of the design because of the large temperature differences in these areas.

Tube Bundle

From a mechanical design viewpoint the tube bundle has certain concerns. There is no particular advantage of using flexible tubes where large bends or unusual tube supports are required. It would seem advantageous to use tubes with known vibrational characteristics in a design where high fluid densities are more apt to cause vibrations of the tubes.

Analysis in the past on sine wave, straight, and hockey stick type tubes has shown that the sine wave and hockey stick tubes are subjected to appreciably more stress than the bayonet downcomer straight tube design. The final design of the FFTF IHX utilizes straight tubes. Interaction analysis between the tube bundle and tubesheets is a very complicated problem, especially on a unit of this design where the tubesheets are not opposed and complex tube configurations are utilized. Careful attention should be paid in a design like this to minimize the tube span and to assure good support in the area of the sine bends and J-tubes.

The helical indentation of the tubes is another source of concern. Such an indentation may be subject to high fatigue

6.3.1 Mechanical Design (Cont'd)

Tube Bundle (Cont'd)

stresses due to vibration and rapid thermal transients. Some design evaluation and testing would be required in order to firm up a concept on this basis.

Shells and Heads

The remainder of the unit will probably be designed within the requirements of ASME Section III Class A, without major problems. The only area of concern outside the main heat exchanger is the double secondary inlet and outlet pipe. Improved design of this area could result in the minimization of the large U-bend through alternate concentric outlets. Concentric outlets have been used in the past, but the main attention should be paid to the elimination of the thermos bottle effect; that is, the effect due to restrained thermal expansion of one pipe against another. The cyclic temperature differences in this area might also be a problem unless the internal pipe is insulated by some means.

6.3.2 Thermal-Hydraulic Aspects of the Design

The design goal of minimizing the fuel salt inventory creates a major penalty to the designer of the fluid portion of the system. Good flow distribution is usually a product of well designed inlet nozzles, plena, flow distributors, and outlet areas. The minimization of fuel salt inventory is the goal which really restricts the design in these areas. The present design will probably be modified, especially in the inlet and outlet areas of the primary side where it is felt that the plena are too small to provide good flow distribution. The tradeoff here is one of economics and reliability, and perhaps some flow model testing is required. The decision to place the fuel salt on the tube side to minimize fuel salt inventory may be necessary. However, closely packed bundles with in-line flow and the fuel salt on the shell side could

6.3.2 Thermal-Hydraulic Aspects of the Design (Cont'd)

could be considered in further evaluations of the concept. With the present concept the shell side flow uses disc and donut baffles with a mixed flow (parallel and cross flow) velocity distribution. Possible improvements in baffle design can be made in order to provide more uniform flow distribution while still obtaining high heat transfer coefficients.

On the secondary side of the unit the flow is down through the central downcomer and through perforations in the central downcomer at the bottom. The overlapping requirements of minimizing fuel salt inventory which points to small tube size, and of placing the coolant salt on the shell side in this area, may create problems with shell side flow distribution and vibrations. The outlet and inlet area on the secondary side may, therefore, have to be increased in size in order to provide better flow distribution.

6.3.3 Fabricability

From a fabricator's viewpoint the major problem associated with this particular concept is the bending of the tubes and the placement of the upper and lower tubesheets. It appears that the tube bundle would have to be fabricated in a different sequence than that which would normally be used, and that a weld joint is inevitable in the tube in order to make the J-tubes fit into the upper cylindrical tubesheet. With tubes of this diameter (3/8 in. OD) and this length, and with a shell (gamma shield) around the tube bundle at the time of fabrication, it will be extremely difficult to thread the small diameter tubes through the tubesheets and then strap the sine wave segments together in order to prevent vibration. At this writing it is not known how this tube bundle could be manufactured in any reasonable way. There appears to be some major tradeoffs which need to be made before deciding on this type of design. Other

6.3.3 Fabricability (Cont'd)

than the fabrication of the tube bundle, the remainder of the unit will present no difficulty for any principal Manufacturer. It is not clear, however, how the outer cylindrical shell attaches to the support structure. It appears to be welded, and if this is true, there does not appear to be space to make the weld.

6.3.4 Future Considerations

Several design tradeoffs should be conducted prior to firming up the IHX concept. Future studies should include:

a - Conceptual development study which includes concepts with the fuel salt on the shell or tube side and new design concepts which could minimize fuel salt inventory.

b - Trade-offs of tube bundle configuration which could minimize thermal stresses in the tube bundle while avoiding damaging vibrations.

c - Conceptual component evaluation using analysis, if necessary, to study the effects of the design LMTD on the heat exchanger.

d - Flow distribution studies are needed to define the optimum baffle configuration consistent with good tube support and flow distribution.

e - Finally, manufacturing studies should be done to assess the state-of-the-art with respect to the use of Hastelloy N for heat exchangers of this size.

6.4 Steam Generator

The steam generator for the 1000 MWe MSBR has requirements similar to that of most steam generators for nuclear reactor applications with two major differences: The first is that the cycle conditions for the steam generator must be commensurate with maintaining a high feedwater inlet temperature (700 F) so that the coolant salt will not freeze. The second major difference is that the steam generators will be made from Hastelloy N because of the corrosive characteristics of the coolant salt.

The total steam generation, including that needed for feedwater and reheat steam preheating is about 10×10^6 lb/hr. It was arbitrarily

6.4 Steam Generator (Cont'd)

decided by Oak Ridge to divide this load between 16 modular steam generators, four to be served by each of the four secondary salt coolant loops. The purpose of this was to gain high availability, to minimize the coolant salt inventory, and to minimize the effect of a tube rupture on plant safety. These considerations are important design parameters, but it is recognized by both ORNL and MSG that further design is warranted to decide on whether the steam generator should be a modular or full size (2 or 4 units) construction.

The present steam generators are operated in parallel with respect to both the coolant sale and steam flows, and they are identical in operation, and design. The feedwater supply to the steam generators will be preheated to 700 F and is at a pressure of about 3750 psia in the inlet region. Therefore, the units are designed for supercritical operation and to accommodate the 700 F minimum feedwater temperature, eliminating the danger of freezing of the coolant salt in the inlet region. The supercritical fluid in the tubes is heated to exit conditions of 1000 F and 3600 psia. The coolant salt temperature drops from 1150 F to 850 F as it flows through the shell side of the heat exchangers in a direction that is principally counter-current to the steam flow. The units are positioned horizontally in order to minimize the possibilities of instability at low flows. These units are counterflow U-shell, U-tube designs similar in concept to steam generators which have been used successfully in the Sodium Reactor Experiment. The major differences are that both the shell and tubes are fabricated of Hastelloy N and use a single fluid boundary to separate the water and the molten salt. Each unit contains approximately 400 tubes, 1/2 in. diameter having the tube to tubesheet length of about 76 ft. The shell side of the unit is baffled using segmental or cross-cut baffles to improve the heat transfer coefficient for the salt film and to minimize salt stratification.

The steam generator evaluation includes mechanical design, thermal-hydraulic design, fabricability, and future considerations. The

6.4 Steam Generator (Cont'd)

evaluation is as follows:

6.4.1 Mechanical Design

Mechanical design of the steam generator will not be as severe as that of the primary heat exchanger, primarily because of the lower temperatures to which the steam generating system is exposed. However, a design for 1000 F steam outlet is quite a severe condition and careful attention must be given to the mechanical aspects of the design. In a supercritical steam system severe combinations of high pressure and high temperature can occur. The present modular design utilizes the advantage of the modular concept for maintaining small tubesheet diameters and consequently reduced thicknesses of pressure parts exposed to the supercritical fluid. From a mechanical design viewpoint, this is a desirable approach for pressure. However, the large stress discontinuity existing between the thin shell and the thick tubesheets make this area very susceptible to thermal shock. Loss of feedwater flow without rapid reduction in coolant flow causes rapid heating of tubesheet at the coolant exit; conversely, loss of coolant flow without rapid reduction in feedwater flow causes rapid cooling of the tubesheet at the coolant exit. From a mechanical design viewpoint, there is also concern about U-tube U-shell heat exchangers where the hot leg is not allowed to expand freely. Considerable bowing of the SRE steam generator resulted because of binding of the expansion member. Also, the bend sections at the coolant salt inlet and outlet may cause high stresses in other sections of the shell of the unit. Alternate methods of providing equal tube length might be desirable.

Other critical areas of the design will be the tube to tubesheet attachments.

6.4.2 Thermal-Hydraulic Design

As a general rule, a modular design of this type can be expected to have good flow distribution because of the very high L/D ratio of the tube bundle. Major areas of concern in this particular concept are in the inlet and outlet regions. It is necessary to avoid flow induced vibrations caused by direct impingement, to provide good inlet flow distributions, and to evenly distribute the salt flow so as to avoid thermal stresses in the tube bundle or in the shell. On the tube side, the supercritical fluid and once-through operation are supported by a technology which has been well established. Further design work would be required to define whether or not it is necessary to utilize the horizontal steam generator rather than a vertical unit. In a vertical unit it would be expected to have instability at a certain flow rate which can't be defined at this time. This instability would be due to thermodynamic instability where multi-values of flow rate could be experienced with a given pressure drop. This can cause non-attainment of heat transfer rating, or thermal cycling of such things as tubesheet welds in the unit.

Local flow reversals have also been experienced in vertical units where the static pressure leg is greater than the pressure drop in the dynamic leg at low loads. However, these problems can be taken into account in specifying the operating conditions for the unit and in following good design practice to assure that instability of flow at low loads will not cause stress problems. The advantages of a vertical unit are the minimization of the possibility of thermal stratification on the shell side at low loads. Another advantage is the fact that the heated fluid is always flowing in the upward direction and the cooled in the downward direction, reducing the possibility of flow reversal.

6.4.3 Fabricability

The present design concept is similar to the U-tube SRE steam generator with the exception that the MSBR steam generator will be fabricated in accordance with the requirements of ASME Section III Class A.

Experience in review of similar designs from a manufacturing viewpoint has lead to conclusions that it is difficult to assure that all welds can be radiographed in accordance with the requirements of the Code. This is true of the final shell weld (or itermediate welds which are hard to reach from the inside). Since the U-tube unit must be fabricated by tubing the bundle first and making the tubesheet welds, placing the shell on afterwards will present a problem in inspection and testing of welds. The bend at the top of the U will be a difficult problem both in the respect of tube welding and supporting the tubes adequately in the bend areas. Although a typical U-tube U-shell heat exchanger is fairly simple to tube, the extra bend will present a significant amount of difficulty.

6.5 Reheater

The design of the reheaters is influenced by practically the same considerations as for the steam generator with the exception that a large logarithmic-mean-temperature difference is not involved. The total steam reheat requirement is about 5×10^6 lb/hr. This is divided among 8 units, the capacity of each being about 36.6 MWt. The steam reheaters operate in parallel. The coolant salt enters at 1150 F and leaves at 850 F. The reheat steam is preheated to about 650 F before it enters the tube-side of the reheater at about 580 psia and it exits at about 1000 F and 540 psia.

The steam reheater is a horizontal, straight tube, single pass, shell-and-tube heat exchanger consisting of approximately 400 3/4 in. OD tubes on a triangular pitch. Table 3.15 contains principle data for the unit. It is a conventional design which may require considerable design evaluation to assure its

6.5 Reheater (Cont'd)

feasibility with the high logarithmic-mean-temperature difference specified in the design data. With this particular concept using opposed tubesheets and straigh tubes, it is doubtful whether tube stresses can be within the allowables for all design and operating conditions. However, this cannot be stated with certainty until some analysis is done. As with the steam generator, there is some advantage to using a vertical unit for good flow distribution at all loads.

Because the reheater can be an expensive component, it is suggested that it is possible to make the reheater in a very similar design to the steam generator. The design objective of a large steam generator using the supercritical cycle will be to minimize the area of the tubesheet. This same objective could lead to an optimum design for the reheater which is not designed for supercritical flow but that could take advantage in the reduction of pressure boundary material.

6.6 Mechanical Pumps

6.6.1 Fuel-Salt Pumps

The four identical fuel-salt circulating pumps are basically a scaled-up and improved version of the Molten Salt Reactor Experiment (MSRE) salt pumps which have been described previously in the literature [1/,2/]. They are located in the hot leg of the primary circuit and take suction from 21 in. diameter pipes leading directly from the top nozzles of the reactor vessel. The pump tanks are designed to accommodate

1/ P G Smith and L V Wilson, "Development of an Elevated-Temperature Centrifugal Pump for a Molten-Salt Nuclear Reactor," ASME Paper No. 65-WA/FE-27.

2/ P G Smith, "Development of Fuel - and Coolant-Salt Centrifugal Pumps for the Molten-Salt Reactor Experiment," ORNL-TM-2987, Oak Ridge National Laboratory (October, 1970).

6.6 Mechanical Pumps (Cont'd)

6.6.1 Fuel-Salt Pumps (Cont'd)

the volumetric thermal expansion of the fuel-salt, therefore, include free surfaces and are located at the highest elevation in the system. There are two considerations associated with the proposed pump location important to the primary system arrangement. Located at the highest elevation in the system, the pumps will drain and stop circulating almost immediately upon a gross loss of fuel salt from the system. This fact may have merit in the limitation of spillage but may, on the other hand, cause excessively high temperatures in the reactor vessel or freezing in the heat exchangers before system draining could be accomplished. The other consideration is the thermal shock to which the pumps may be subjected due to their location in the hot leg of the system. No operating transients are specified, but the relative vulnerability of rotating equipment to temperature changes should be included in an overview of the system layout.

Hydraulic Analyses

Large Suction Value is too low.

A cover gas pressure of 10 psig in the primary circuit is equivalent to 17.4 ft of fuel-salt at 1300 F. The velocity in the suction pipes will be approximately 16.5 ft per second when flowing 16,000 gallons per minute. Subtracting from 17.4 ft one and one-half velocity heads for losses between reactor vessel and pump impeller and neglecting submergence and vapor pressure, the net positive suction head available (NPSHA) is 11.0 ft. The reference design denotes net positive suction head required (NPSHR) as 16.0 ft. The suction specific speed (S) of the reference design operating at 890 rpm with 16 ft would be $S = 890\ (16{,}000)^{0.5}/(16)^{0.75} = 14{,}100$. Conservative design practice on this type of single-suction impeller would require S = 8000. The NPSHR for this design value would be 19 ft. Adding the piping losses and converting units, the corresponding cover gas pressure in the reactor vessel should be 22 psig. Operation of the pump at a cover

6.6.1 Fuel-Salt Pumps (Cont'd)

Hydraulic Analyses (Cont'd)

gas pressure lower than 22 psig would be possible, but not as low as 10 psig. Net positive suction head available to the pumps could be raised by increasing submergence of the impeller. Additional submergence, however, would involve a longer shaft overhang, an objectionable change in design.

The Reference Concept indicates that the primary pumps may be required to operate over a speed range from 10 percent to 110 percent of design speed by supplying the drive motors with variable-frequency power. It indicates that the power source would be individual solid-state inverters for each drive motor. Solid-state inverter systems are not currently practical for the power level required in this application, however, suggesting that a more conventional electro-mechanical variable frequency power supply system may have to be specified. Full range speed control from 10 to 110 percent and the requirement for the drive motor to be located within the primary containment boundary would rule out drive motors other than the simple and low maintenanced squirrel-cage induction motor.

DLC!

Recent studies have indicated that the primary pumps may be constant speed with variable speed secondary pumps [3/]. Whether constant or variable speed, there most likely will not be flow control valves in the four parallel primary loops. Hence, the pumps should operate at their best efficiency point (BEP) when all four loops are flowing. When one or more loops are down, however, reverse flow will occur through the de-energized pumps, the rate depending on the relative flow resistance will "runout" to a higher flow rate

3/ W H Sides, "Two Schemes for Part-Load Temperature Control of the MSBR," MSR-70-56, Intra-Laboratory Correspondence, Oak Ridge National Laboratory, (August 21, 1970).

6.6.1 Fuel-Salt Pumps (Cont'd)

Hydraulic Analyses (Cont'd)

at which their developed head is equivalent to the new system drop. The degree of "runout" cannot be determined without further study, but it is certain to occur to some extent and result in pump operation at off-design conditions.

Mechanical Analysis

As discovered during the development and testing of the MSRE pumps, operation at other than the BEP can cause significant radial load on the impeller and corresponding shaft deflection 4/, 5/. The overhung shaft design common to both the MSRE and reference pumps is at a serious disadvantage for high radial loading on the impeller. The shaft deflection resulting from a given radial load on the impeller is determined by the stiffness of the shaft and its bearing supports. There are practical limits on the maximum achievable stiffness of these components and, hence, limits on the minimum deflection attainable. The control of shaft deflection is important for at least three reasons:

1 - The minimization of alternating stresses in the shaft for extended life,

2 - the minimization of vibration, and

3 - the minimization of running clearances between the rotating assembly and stationary parts of the pump.

Significant alternating stresses (compressive-tensile) in the shaft will give it a finite life measured in hours of operation, considering the number of fatigue cycles associated with rotation at 890 rpm. One-million cycles will

4/ ASME Paper No. 65-WA/FE-27, p 10.

5/ ORNL-TM-2987, pp 24-26.

6.6.1 Fuel-Salt Pumps (Cont'd)

Mechanical Analysis (Cont'd)

have accumulated after only 19 hours of operation. The currently-accepted value of 20,000 psi for the design fatigue strength at 10^6-cycles for Hastelloy-N at 1300 F indicates the importance of this consideration [6/].

oper. of many salt pumps having over-hung impeller for periods of 3 years revealed no deleterious effects from these intolerable conditions

The release of the energy stored in the deflected shaft as it rotates could induce vibration in the pump structure or elsewhere and/or result in erratic shaft orbiting. Neither of these conditions could be tolerated in a system designed for a 30-year life.

Clearances between rotating and nonrotating parts are critical in several areas. The impeller must run in the pump case with minimum clearances to maximize hydraulic efficiency. The reference pump impeller includes labyrinths on both front and back side walls to limit leakage from the discharge back to suction and into the pump tank, respectively. The clearance of the shaft in the shield plug must be minimized to avoid a large step in the shaft for limitation of radiation streaming up the annulus. Also the clearance in the gas purge gland in the shield plug region of the pump must be minimized to limit the gas flow requirements and to raise the velocity in the gland for it to function properly. Inordinately large shaft deflection would necessitate compromises in these objectives to avoid rubbing and possible shaft seizure.

Joyce

Another important consideration associated with the radial load on the shaft is the effect on the life of the anti-friction bearings on the reference pump shaft. With the overhang approximately twice the bearing span, the maximum bearing load will be roughly twice the impeller load.

6/ C W Collins, "Design Fatigue Strength of Hastelloy-N", Intra-Laboratory Correspondence, Oak Ridge National Laboratory, (March 18, 1971).

6.6.1 Fuel-Salt Pumps (Cont'd)

Mechanical Analysis (Cont'd)

The hydraulic and mechanical decoupling of the reference pump case from the pump tank are commendable features. The elimination of structural redundancy between the pump case and tank should minimize distortions and misalignment which could result from mechanical or thermal expansion loading. Any such condition would only add to the problem of shaft clearances. The limitation on the change of liquid level in the pump tank during various modes of operation, accomplished by isolating the liquid in the pump tank from the main flow through the pump, tends to minimize shaft overhang, the critical nature of which was discussed earlier.

The limitations placed on pump design and operation by the overhung shaft feature may be eliminated by utilizing a radial guide bearing near the impeller, wetted by molten salt. Limited testing has exhibited the practicability of such a bearing of the hydrodynamic sleeve type, but serious metallurgical problems remain unanswered 7/, 8/. The earlier ORNL two-fluid reactor concept renewed a latent interest in the molten-salt lubricated bearing, because the estimated length of the pump shafts would have precluded the overhung design 9/. During this period a metallurgical study of hard-coated specimens was initiated, but was subsequently terminated when the current single-fluid reactor concept with shorter pump shaft lengths allowed a return to the overhung design 10/.

7/ P G Smith, "High-Temperature Molten-Salt Lubricated Hydrodynamic Journal Bearings," ASLE Trans, 4, 263-274 (1961).

8/ P G Smith, "Literature Search on Bearing Materials Compatibility with Fused Salts, "ORNL CF-58-1-5 (January 2, 1958).

9/ P G Smith, "Experience with High-Temperature Centrifugal Pumps in Nuclear Reactors and Their Application to Molten-Salt Thermal Breeder Reactors, "ORNL-TM-1993, (September, 1967).

10/ MSRP Semiannual Progress Report, ORNL-4344, p 84, (February, 1969).

6.6.1 Fuel-Salt Pumps (Cont'd)

Mechanical Analysis (Cont'd)

The overhung design has the advantage of allowing the pump to be operated "dry", which is a necessary feature when the pump is being considered for gas circulation. A pump fitted with a liquid-lubricated bearing could not be used to circulate gas for preheating and/or after-heat removal as proposed in the reference design. It has been recognized, however, that a venturi-type bubble generator as proposed for the off-gas system in the reference plant may also be designed to circulate gas in the system, removing that duty from the salt pump [11/].

?

?

In order to circulate the required amount of gas, the reference salt pumps must be operated at 1200 rpm. The speed change from 890 rpm for pumping salt to approximately 1200 rpm for pumping gas may be accomplished by providing a dual winding in the stator of the squirrel-cage induction motor or by designing for 1200 rpm at maximum supply frequency. Considering the much lower horsepower required for circulating gas at 1200 rpm, however, a more economical arrangement would be to provide a small pony motor for the higher speed.

The requirement to operate at 1200 rpm will affect the design of the pump shaft and support system in that the critical speed must be at least 1500 rpm, 125 percent above the highest operating speed. Design for operation in the subcritical region is preferred to supercritical design because of the requirement to operate at reduced speed and because of the questionable response of the system as it accelerates through the region of resonance. Critical speed is maximized by minimizing the rotating mass and by maximizing the stiffness of the system. Mass can be reduced by utilizing hollow-shaft construction. The stiffness of the shaft has practical

11/ ORNL-4344, p 74.

6.6.1 Fuel-Salt Pumps (Cont'd)

Mechanical Analysis (Cont'd)

limits noted earlier. The method proposed for support of the reference pump to allow horizontal and vertical freedom for thermal expansion of the loop will tend to reduce the effective stiffness of the shaft support, reducing the critical speed. It is doubtful that the required critical speed of 1500 rpm can be attained with the reference design, considering the lack of stiffness in the support. Possible solutions to this problem, should it exist, would be to utilize constant load supporting devices rather than the proposed springs, and/or to reduce the maximum operating speed by removing the gas circulating duty from the salt pumps.

Preheating

The proposed furnace concept for preheating the salt-containing components, consisting of externally-replaceable electric resistance heaters, should be given close scrutiny. The advantages of the proposed space heating over a localized trace heating technique are numerous and desirable, but the furnace concept may not give adequate heating for the pumps or other components. If the heaters are not properly located in relation to the distribution of mass and convective currents within the cell, uneven heating and structural distortions may occur. Symmetric peripheral placement of the heaters and concentration commensurate with the mass and complexity of the components to be heated should minimize the problems associated with the proposed preheating concept.

Maintenance

The pump tank should be designed for the life of the plant. There are several components of the pump, however, which are susceptible to wear and/or deterioration and therefore must be replaceable. The domed maintenance containment vessel

6.6.1. Fuel-Salt Pumps (Cont'd)

Maintenance (Cont'd)

located above the reactor cell of the reference plant contains hatches for vertical removal of the primary salt pumps and motors, with the exception of the pump tanks which are welded into the primary piping. From the conceptual layout and description of the pumps it is not clear what maintenance procedures have been considered necessary or how they are to be carried out. It would appear that at least two procedures have been planned:

1 - the removal and replacement of the bearing and seal assembly only, and

2 - the removal and replacement of the entire rotating element, shield plug, and impeller as a one-piece subassembly. Both procedures require complete and separate removal of the motor and coupling assembly.

The bearing and seal assembly contains the least reliable and shortest-lived components. Its independent removal is made possible by the incorporation of the gas-pressure-actuated static shutdown seal above the shield plug to contain contaminated cover gas and by separation of the bearings from the pump shaft. Detachment of the bearing and seal assembly from the member supporting it would require remote removal of bolts with apparatus such as provided on the MSRE pumps but not shown on the reference conceptual layout 12/.

The removal of the larger subassembly would allow repair or replacement of all pump components subject to wear with the exception of the labyrinth in the pump case at the impeller inlet which would be desirable. This procedure would most likely be performed with the system drained of salt and at a low temperature. In the Reference Concept the cold

12/ ORNL-TM-2987, pp 5-6.

6.6.1 Fuel-Salt Pumps (Cont'd)

Maintenance (Cont'd)

condition the pump center line is displaced approximately 2 inches horizontally from the motor center line, moving into alignment when operating temperature is reached. To accomplish the removal of the larger subassembly in the cold condition, the inside diameter of the bellows assembly must be at least 4 in. larger than the largest diameter being removed. Provision should be included for the protection and/or replacement of the bellows assembly, considering its vulnerability to damage during the above procedure.

more pumps

It is suggested that the most practical pump maintenance procedure would be the removal of the motor and pump components as a complete assembly. This operation would be accomplished by detachment of the assembly from its support at the crane bay floor and withdrawal into an isolation cask for decontamination and repair. A spare assembly would be available at all times for rapid replacement. This procedure would reduce the complexity and risk involved in the pump maintenance program.

6.6.2 Auxiliary Fuel-Salt Pump

The auxiliary fuel-salt pump located near the chemical processing holdup tank in the schematic flow diagram of Figure 3.5 has the function of driving jet pumps for transfer of fuel-salt from the drain tank or storage tank to the primary circuit or to the fuel processing system. When being used to transfer salt into the primary circuit, it would be driven at 1780 rpm and provide 100 gpm at 100 ft of head. These conditions would require a specific speed of $N_s = 1780 (100)^{0.5}/(100)^{0.75} = 555$. The Reference Concept indicates that the pump would be driven at 890 rpm when delivering salt to the fuel processing system at 3 gpm and 25 ft of head. If the pump should be designed for a specific speed

6.6.2 Auxiliary Fuel-Salt Pump (Cont'd)

of 555 (BEP at 100 gpm), the BEP at 890 rpm would be at 50 gpm with 25 ft of head developed, which indicates that the pump would have to be throttled back near "shutoff" to deliver only 3 gpm. The type of pump proposed in the Reference Concept for this application is similar to the primary and secondary salt pumps, in that an overhung shaft design is utilized. The problems associated with operation of this design at conditions varying from BEP were covered in the discussion of the primary pumps. One solution to the apparent difficulty in delivering the 3 gpm to the fuel processing system would be to bypass 47 gpm,thereby allowing the pump to operate at BEP.

6.6.3 Coolant-Salt Pumps

Each of the four identical secondary coolant-salt circulating pumps receive 1150 F liquid from the shell side of the primary heat exchangers and discharge into four steam generators and two steam reheaters. They are described as being practically identical to the primary fuel-salt pumps, with exceptions in the drive motor and pump tank. The hydraulic conditions allow the use of the same impeller and case design for both the primary and secondary pumps, although the secondary pumps must be operated at a higher speed to develop twice the head.

The secondary pumps are located at the highest elevation in the secondary system and contain a free surface and salt expansion volume. Their shaft overhang is less than the overhang in the primary pumps because of less shielding and the absence of level changes in the pump tank during operation. The secondary loops are completely independent of each other, unlike the primary loops which intersect in the reactor vessel. The level changes which occur in the primary pumps due to the common path through the reactor vessel as one or more pumps are deenergized do not occur because of the complete separation of the secondary loops. For the same

6.6.3 Coolant-Salt Pumps (Cont'd)

reasons, the secondary pumps should perform at their BEP during all phases of plant operation, eliminating the shaft deflection problems associated with performance at off-design conditions.

Hydraulic Analysis

Good. We have our suction pressure fuel & coolant heat pumps are too high!

The pressure datum for the secondary loops is a cover gas pressure of 20 psig in the pump tanks. This pressure is equivalent to 44 ft of coolant salt at 1150 F. Neglecting vapor pressure and submergence, NPSHA would equal 44 ft. The reference design denotes NPSHR as 20 ft. The suction specific speed (S) of the reference design operating at 1190 rpm with 20 ft would be $S = 1190\ (20{,}000)^{0.5}/(20)^{0.75} = 17{,}800$, and with 40 ft, $S = 10{,}600$. As noted in the discussion of the primary pump suction conditions, conservative design practice for this type of single-suction impeller would require $S = 8000$. The NPSHR for this design value would be 58 ft which is equivalent to a cover gas pressure of 31 psig. Operation of the pump with a cover gas pressure of 20 psig would be marginal, hence the pump supplier would prefer it to be closer to 31 psig. For reasons of safety, the pressure on the coolant side of the primary heat exchangers would most likely be higher than the fuel side. If the cover gas pressure must be raised in the primary system to provide adequate suction conditions for the primary pumps, the pressure in the secondary loops would have to be raised even though the increase would not be necessary for the pumps.

The secondary pumps are assumed to have a speed range of 10 percent to 110 percent of design speed. Although the secondary drive motors are more accessible than the primary motors, which would allow more frequent maintenance, the speed range would rule out wound rotor motors and other variable speed drives which are currently more conventional

Suggests limiting the operational modes of MSBR to permit use of an economical, high-maintenance wound-rotor induction motor.

6.6.3 Coolant-Salt Pumps (Cont'd)

or economical than variable frequency systems. As discussed earlier, the primary pumps may be required to operate at only two speeds: 890 rpm when circulating salt and 1200 rpm for gas. These two modes of operation could be achieved by utilizing a fixed-speed squirrel-cage induction and a pony motor. If the variable speed range for the secondary loops could be decreased to 2-to-1 or 3-to-1, a more conventional and economical wound rotor motor or eddy-current coupling drive could be utilized with a pony motor for fixed low speed operation (5-10 percent design).

6.6.4 Main Boiler Feedwater Pumps

The two, barrel-type, six-stage, 5000 rpm, turbine-driven main boiler-feedwater pumps are of conventional construction, and the flow rate of 3.575×10^6 lb/hr = 8050 gpm at 358 F with 9380 ft TDH defines them as a conventional size. A design pressure of 4000 psi, based on the specified discharge pressure of 3800 psia, is within current state-of-the-art. The suction pressure, however, has not been specified. It can be calculated by subtracting the pump differential pressure from the specified discharge pressure of 3800 psia. At the specified inlet temperature of 358 F, the feedwater has a specific gravity of 0.89. At a head of 9380 ft, the differential pressure is 9380 (0.89/2.31) = 3610 psi. The suction pressure is 3800 - 3610 = 190 psia. The vapor pressure of the feedwater at 358 F is 149 psia. The excess pressure is 190 - 149 = 41 psi. Converting this pressure to net positive suction head available, 41 (2.31/0.89) = 106 ft. A pump of this type operating at 5000 rpm will require at least 150 ft and more likely 200 - 300 ft. of NPSH, depending on the type of construction preferred by the pump supplier.

The obvious solution to the suction head problem would be to increase it by at least 100 ft. The necessary head may be developed by increasing the rating on the existing low-pressure, feedwater-booster pumps located upstream of the main feedwater

6.6.4 Main Boiler Feedwater Pumps (Cont'd)

pumps or by adding booster pumps and driving them off the main feedwater pump turbines through gear reducers. If the latter method should be preferred, the possibility of driving the uprated existing feedwater boosters with the main feedwater pump turbines should also be considered.

The necessity of increasing the available suction pressure on main feedwater pumps occurs quite often in conventional power plant systems, therefore the suggested changes are not unique to the MSBR reference design.

6.6.5 Boiler-Feedwater Pressure-Booster Pumps

The two canned-rotor motor-driven, pressure-booster pumps located downstream of the main boiler-feedwater pumps must share equally the total steam generator flow rate of 10.1×10^6 lb/hr. At the inlet conditions of 695 F and 3475 psia, the rating of each pump would be approximately 19,000 gpm, 1400 ft, TDH. Allowing for pump efficiency, the brake horsepower of the canned-rotor motors would be a minimum of 4500. This rating is approximately 50 percent larger than the largest canned-rotor motor known by the writer to have been built to date. Such a motor would most likely optimize at a 4-or 8- pole speed, due to the large increases in electrical and hydraulic losses in going to a 2-pole design.

Assuming a full-load, 4-pole speed of 1750 rpm, the net positive suction head required would be

$$NPSH = 1750\ (19{,}000)^{0.5}/8{,}000^{\ 1.33} = 93 \text{ ft}$$

The vapor pressure of the feedwater at 695 F is 2993 psia. The excess pressure is 3475 - 2993 = 482 psi, or 2085 ft NPSH. With this much NPSH available the pump could be turned at

$$N = (8{,}000)\ (2{,}085)^{0.75}/(19{,}000)^{0.5} = 18{,}000 \text{ rpm},$$

which clearly indicates that the motor is the limiting factor on speed.

6.6.5 Boiler-Feedwater Pressure-Booster Pumps (Cont'd)

Speed is important in the minimization of diameter for pressure vessel design. For mechanical simplicity, a single-stage design would be selected and would have s specific speed of $N_s = 1750\ (19{,}000)^{0.5}/(1400)^{0.75} = 1050$. For this specific speed the minimum inside diameter of the pump case would be 60 in. Assuming a cylindrical geometry and carbon steel construction, with design conditions of 4000 psig at 750 F, the wall of the pump case would be approximately 8 in. thick, giving an outside diameter of 76 in. The outside diameter of the motor would be somewhat larger than the pump case.

Motor efficiency could be raised by utilizing the "wet-winding" concept rather than the canned rotor. A motor of this power level would ordinarily be designed for a line voltage of at least 4160 volts. Current state-of-the-art for "wet-winding" technology is in the range of 2000 to 3000 volts. The problem of sealing the high voltage power lead terminals at 3800 psi for a "wet-winding" motor of this size would require a major development program along.

The canned-rotor motor apparently was selected in order to avoid the shaft sealing problem at 3475 psi suction pressure. Current practice is to employ a limited-leakage sealing system for pressure to this range. Such a system required complex auxiliary seal water injection equipment of relatively high flow rate for a pump of this size. The advantages of a shaft-sealed pump would be found in a closer approach to current state-of-the-art and the opportunity to design for an operating speed of 5000 rpm or higher by utilizing a gear increaser or turbine drive, thereby reducing overall size considerably.

This boiler-feedwater pressure-booster pump application obviously presents many formidable design problems, regardless of the configuration selected. These boosters could

6.6.5 Boiler-Feedwater Pressure-Booster Pumps (Cont'd)

very well be the most expensive and least reliable pumps in the entire molten salt breeder reference design. It is recommended, therefore, that they be eliminated, if possible, by increasing pressures elsewhere in the steam cycle.

6.6.6 Low-Pressure Boiler-Feedwater Booster Pumps

The two low pressure boiler-feedwater booster pumps which are located upstream of the main feedwater pumps and below the deaerator are not described. They were discussed above, however, in regard to the suction pressure problem on the main feedwater pumps. It was suggested that the differential pressure across these pumps be increased, and that perhaps they could be driven by the main feedwater pump turbines.

7.0 SPECIAL MATERIALS

7.1 Fuel Salt

7.1.1 Physical Property Requirements

The requirements for any fluid reactor fuel are as follows:

1 - Adequate solubility of U, Pu and/or Th over the necessary temperature range.

2 - Low neutron capture cross section.

3 - Thermal stability at temperatures needed for high quality steam.

4 - Radiation stability.

5 - Low vapor pressure.

6 - Low liquidus temperature.

7 - Good heat transfer properties (high thermal conductivity and heat capacity).

8 - Good hydrodynamic properties, especially viscosity.

9 - Low corrosion:
  a - Toward some suitable container material.
  b - Toward a suitable moderator material.

10 - Tolerance for fission products.

11 - Low cost.

12 - Adaptability to chemical processing.

13 - Low chemical reactivity with:
  a - Air
  b - Water

Isotopes having desirable thermal neutron absorption cross sections (less than 0.05 barns) are ^{15}N, O, ^{2}H, C, F, Bi, and ^{7}Li. Isotopes having cross sections in the range 0.05 - 0.35 barns are tolerable as major constituents but with some loss in breeding potential. Such isotopes would be ^{11}B, Mg, Si, Pb, Zr, P, Al, and H. In limited quantities,

7.1.1 Physical Property Requirements (Cont'd)

isotopes having cross sections in the range 0.4 - 0.7 barns might be tolerated (Ca, S, Na, ^{37}Cl, Sn, Ce and Rb).

Most hydrogen or deuterium compounds are unstable at high temperature. Only alkaline hydroxides and a few hydrides have adequate thermal stability above 100 F. The hydoxides dissolve very little aranium and are very corrosive to virtually all useful metals, whereas the hydrides are strong reducing agents and not likely to be compatible with uranium compounds.

Uranium and thorium form high-melting binary compounds with O, C, N, S, Si and P.

Oxygenated anions suffer either from thermal or radiation stability or inadequate solubility of uranium and thorium. In general, binary compounds tend to show greater radiation stability than more complex molecules.

As a practical matter, the choice of desirable fluid fuel constituents seems to be limited to fluorides and chlorides. While chlorides tend to have lower melting points than fluorides, the thermal neutron absorption cross section of natural chlorine is undesirably high (32 barns) and even separated Cl-37 is 0.56 b. Fluorides also have generally lower vapor pressure than chlorides and a higher heat capacity either by weight or volume.

Fluorides (and other salts) of Bi, Pb, Sn are readily reduced by common structural metals and, furthermore, these elements as metals tend to dissolve many structural metals. Hence the choice of fuel constituents is limited pretty much to fluorides of Be, ^{7}Li, Mg, Zr, Ca, Na and possibly Ce and Rb.

The $LiF-BeF_2$ system almost uniquely meets the requirements for a fluid thermal reactor fuel. Although the eutectic mixture, containing 52 percent BeF_2, has the lowest

7.1.1 Physical Property Requirements (Cont'd)

liquidus (360° C), its viscosity is undesirably high, and the final choice involves a trade-off between melting point and viscosity.

The fuel salt composition proposed by ORNL for the single fluid breeder reactor is:

^{7}LiF	71.7 mole %
BeF_2	16 mole %
ThF_4	12 mole %
UF_4	0.3 mole %

This salt has a liquidus of 500° C (932 F) and the physical properties presented in Table 3.19. Over the proposed temperature range the average density is about 208 lb/ft^3, the heat capacity is 0.32 Btu/lb/°F, the thermal conductivity is 0.71 Btu/hr/ft/°F, and the viscosity ranges from 7 cp at 704° C (1300 F) to 14 cp at 566° C (1050 F). Thus its heat transport and hydrodynamic properties are quite favorable.

From a corrosion viewpoint, provided precautions are taken to remove oxides and other oxidants, uncontaminated fuel salt is compatible with Hastelloy N with expected corrosion rates of less than 0.1 mil per year. Recent data, however, suggests that fission products in the salt may have an adverse effect on compatability. This is discussed in Section 7.5.

The proposed fuel salt appears to be compatible with available grades of graphite moderator to temperatures of 1300 F and fluences of 3×10^{22} nvt ($E \geq 50$ kev).

The cost of ^{7}Li makes the fuel salt relatively expensive. In fact, the cost of ^{7}Li for the reference design is greater both in makeup cost and value of inventory than the cost of the fertile thorium material. However, the

7.1.1 Physical Property Requirements (Cont'd)

prospects for breeding would be essentially nil in a molten salt thermal reactor which does not use ^7Li.

Radiation effects on the proposed salt appear to be negligible. No significant amounts of free F_2 or CF_4 are produced if the salt temperature is kept above 200° C.

The properties of the fluoride fuel salt are such that considerable variation in composition, as needed to optimize neutron performance of the reactor, can be tolerated without incurring compatibility problems.

Control of the oxidizing potential of the fuel salt seems to be necessary to limit corrosion rates, uranium precipitation and other potential chemical effects. It appears to be feasible to achieve the necessary control by HF sparging and/or periodic additions of Be metal.

7.1.2 Possible Reasons for Reconsidering Fuel Salt Composition

Although the selection of the fuel salt proposed by ORNL appears to be sound, there may be reasons for seeking other compositions.

Lower Melting Point or Viscosity

The 930 F liquidus temperature of the proposed fuel salt does not appear to present any intolerable problems for operation with the proposed coolant loop and steam system temperatures. Obviously, any reduction in liquidus would be advantageous. It could readily be achieved by increasing the BeF_2 content but at the expense of higher viscosity. It would be possible to optimize the Li/Be ratio to achieve lowest cost, providing all the economic factors were firmly established, but such optimization would have little effect on the feasibility of the MSBR and probably not have much effect on the dollar or neutron economy of the reactor. The substitution of other fluoride salts for ^7LiF and BeF_2 for the purpose of lowering melting point or viscosity would seriously reduce the breeding potential.

7.1.2 Possible Reasons for Reconsidering Fuel Salt Composition (Cont'd)

Tritium Production

The tritium production in the reference MSBR is about 2400 curies/day - about 7 times as great as that in a light water reactor plant of comparable output. Whereas most of the tritium in water reactors is retained by the fuel elements, a large portion of tritium in this MSBR concept is believed to escape to the steam system. Almost all of the tritium comes from the fast neutron reaction with ^{7}Li and the thermal neutron reaction with ^{6}Li. Furthermore, the ^{6}Li concentration in the reference fuel salt (specified assay is 99.995% ^{7}Li) is essentially that which would be in equilibrium with the Be content of the salt. Although it is hoped that release of tritium to the environment can be controlled by a combination of several available methods, nevertheless, the tritium problem would be greatly alleviated if tritium production were restricted by the elimination of all or part of the lithium or beryllium, but the breeding ratio would certainly suffer.

Cost

The cost of the fuel salt could be substantially reduced by substituting either natural LiF or other diluent for ^{7}LiF. The breeding ratio would obviously suffer, but the net cost of electricity might be reduced. Data on the cost and availability of ^{7}Li in quantities sufficient to support viable MSBR industry are only available from USAEC which is currently the sole source of supply. ORNL has explored the question and been assured that adequate supplies could be available at a price of $120 per kg. This cost is low enough to make the estimated fuel cycle cost of the MSBR attractive. Because the importance of a breeding potential cannot be assessed at the present time, no attempt has been made to explore the economic incentives for seeking a lower cost fuel salt.

7.2 Coolant Salt

7.2.1 Physical Property Requirements

The requirements for MSR secondary coolant are much the same as for the primary fuel salt except for solubility of fissile and fertile materials, the requirements for radiation stability and the need for low-neutron absorption. Exposure to delayed neutrons and gamma flux from the fuel salt in the IHX is a minor consideration. Low melting point is of greater importance for the coolant than for fuel salt because it may be exposed to lower temperature transients. Compatibility with steam of water is important because of the possibility of system leaks.

ORNL has chosen a molten salt as secondary coolant, but other possibilities are (1) gas, and (2) liquid metal. The objections to use of gas are the high pressure needed for practical heat transport and problems related to assuring emergency cooling in the event of loss of coolant or loss of flow accidents. Also, the poorer heat transfer properties of gas coolant require a substantial increase in heat transfer surfaces and a corresponding significant increase in fuel salt inventory. On the other hand, a gas coolant loop should permit rather effective trapping of tritium and would have no freeze-up problems.

Liquid sodium could be considered for the secondary coolant. In this case the problems related to steam generators are virtually identical with those for an LMFBR plant, although the optimum operating conditions might be somewhat different. Sodium metal, however, is not compatible with fluoride fuel salt and a leak at the IHX in either direction would result in serious precipitation problems.

7.2.2 Coolant-Salt Composition and Properties

The ORNL choice of coolant salt is the eutectic mixture of 92 percent sodium fluoroborate ($NaBF_4$) and 8 percent sodium fluoride (NaF). The liquidus temperature is 385° C (725 F).

7.2.2 Coolant-Salt Composition and Properties (Cont'd)

At 850 F the density is 121 lb/cu ft, heat capacity 0.36 Btu/lb/^{o}F, viscosity 2.5 cp and thermal conductivity 0.23 Btu/hr/ft/^{o}F. The salt exerts a pressure of 200 mm Hg at 1125 F due to dissociation of $NaBF_4$ to BF_3. Decomposition can be prevented by maintaining an appropriate backpressure of BF_3. Since the ratio of NaF to $NaBF_4$ is altered by evolution or take-up of BF_3, the BF_3 pressure affects the freezing point and the boiling point.

Corrosion resistance of Hastelloy N toward the fluoroborate coolant salt is expected to be essentially the same as that toward the fuel salt. However, the corrosion rate is dependent on the H_2O and O_2 content of the coolant salt and more quantitive data is needed to establish tolerable limits of H_2O and O_2 content. Sparging with HF (and BF_3 in He) appears to be effective in reducing the O_2 content. It has been hoped that the fluoroborate coolant salt can tolerate enough H_2O or O_2 to trap a substantial part of the tritium which diffuses through the IHX tube walls to minimize the transport of tritium to the steam-water system, but this has not been established.

The 725 F liquidus of the coolant salt virtually dictates a final feedwater temperature to the steam generators of about 700 F. This in turn virtually required use of supercritical steam pressure.

Other molten salt coolants considered for MSBR include mixtures of BeF_2 with LiF and/or NaF. The possibility of cross contamination of coolant salt and fuel salt suggests that any LiF be of the Li isotope and hence, expensive. Also while BeF_2 is a desirable constituent from the viewpoint of liquidus temperature, it tends to make the viscosity high.

While no strong objection can be raised to the choice of fluoroborate as coolant salt, further consideration should be given to alternate fluoride salts containing NaF and

7.2.2 Coolant-Salt Composition and Properties (Cont'd)

possibly AlF_3 or ZrF_4 with lower melting point and acceptable viscosity. Also further consideration of chloride salts seems to be warranted.

The ORNL single fluid MSBR design study does not indicate any system for maintaining the secondary coolant salt. The reference design does provide for four 2100 cu ft drain-storage tanks for coolant salt equipped with electric heaters. As a minimum, the following are required:

a - A cover gas system with provisions for removing tritium, water vapor and adjusting BF_3 pressure.

b - A cleanup system for removing corrosion products and probably with provisions for batchwise sparging with HF, BF_3, He for oxide removal.

c - Provisions for salt volume expansion.

7.3 Compatibility of Fuel Salt and Coolant Salt

The consequences of intersystem leaks between fuel salt and coolant salt have not been thoroughly explored. In preliminary experiments ORNL has mixed salts with compositions similar to the coolant and fuel salts of the reference design. The principal indications are that:

1 - The mixture forms two immiscible phases over a wide range of composition, with uranium being relatively insoluble in the fluoroborate phase, and

2 - Copious quantities of BF_3 are released, apparently as a result of displacement by BeF_2 which tends to form BeF_4^{2-}.

Little information is at hand as to solubility limits, melting points, etc of the phases involved. Quite clearly a gross leakage in either direction would probably require immediate shutdown of the plant and a rather difficult cleanup operation. In either case, there would probably be precipitation of unanion and certain fission products. The cleanup requirements, for the primary loop in one case and the coolant loop in the other, would be quite comparable, but in leakage of coolant salt into the fuel loop would seem to be more acceptable. There would be a distince

7.3 Compatibility of Fuel Salt and Coolant Salt (Cont'd)

advantage if the plant were designed so that a gradual intersystem leakage could tolerated, at least to the point that the plant could continue to operate, albeit with reduced efficiency and even at reduced output, until it could conveniently be shut down for clean-up and repair.

The principal consequence of a small inleakage of coolant salt to the fuel salt would be increased absorption due to B and Na, reducing both the reactivity and the breeding ratio. Most of the B would evaporate as BF_3 which would have to be handled by the purge gas system. The Na would accumulate in the fuel salt. The reactivity loss could be compensated by adding UF_4. The economic penalty of a temporary modest increase in U inventory and decrease in breeding ratio would generally be acceptable as the price of keeping the unit on the line. The question of how, or if, the Na is subsequently removed would have to be resolved. A small amount of inleakage of fluoroborate coolant salt could probably be tolerated without precipitating uranium, but the limit would have to be determined. On the other hand, outleakage of fuel salt to the coolant loop would result in an immediate spread of radioactivity to relatively clean equipment and plant areas. Also it is believed that only a relatively small leakage of fuel salt to the coolant would be tolerable without risking uranium precipitation. On balance, a design which assured that any leakage would always be inward from the coolant salt to the fuel salt would seem to be preferable. Other possible consequences of leakage between coolant and fuel salt are increased corrosion and/or flow blockages. These are most likely to occur as a result of the presence of oxides or water which may accumulate in the coolant salt as a consequence of relatively minor leakage from the steam system or of the natural affinity of the fluoroborate salt for water.

For the reference design the pressure differential across the fuel salt inlet tube sheet is about 146 psi from fuel salt to coolant salt. The pressure differential across the fuel salt outlet tube sheet is about 100 psi from the coolant salt to the fuel salt.

7.3 Compatibility of Fuel Salt and Coolant Salt (Cont'd)

Hence leakage can occur in either direction and from a safety viewpoint the plant must be designed so that either is tolerable. The probability of leakage from t e fuel salt to the coolant salt is higher than in the reverse direction because the temperature, as well as the pressure differential, is highest at the inlet end.

There seems to be no way to reverse this tendency other than relocating the circulating pumps and/or increasing the secondary side pressure. It would not be practical to relocate the fuel salt pumps to the cold leg because this would result in excessive pressure in the reactor. Putting the coolant salt pumps in the cold leg would raise the shell side pressure by about 60 psi. This would create some design problems for the IHX shell. It should reduce the probability of outleakage because the pressure differential across the hot-end tube sheet would be only 180 psia - 94 psia = 86 psi, but the most probable leakage is still likely to be outward at the high temperature end. A substantially higher pressure, roughly 300 psia or more at the pump discharge would be needed to assure that intersystem leakage would always occur from the coolant salt to the fuel salt.

7.4 Graphite

From a study of Figures 3.8 - 3.13 the quantities of graphite shown in Table 7.1 were calculated. In this concept all but the radial reflector graphite will be replaced. It can be seen that a total of about 400,000 lb of graphite is required every four years. At an assumed average cost of \$10/lb this quantity represents an annual cost of about $\$10^6$.

Based on the fast flux distribution reported for the reference design, only about 40 percent of the replaceable graphite must be replaced every four years. The balance will last at least eight years and substantial amounts would last 12 and 16 years. By replacing only that graphite incapable of receiving another full exposure, the total amount of graphite required over the plant life could be reduced by about half. Thus, by handling the graphite in

7.4 Graphite (Cont'd)

small quantities, graphite utilization would be improved and a substantial reduction in fuel cycle cost would be realized.

7.4.1 Fabrication

All of the central core components (items 1 - 8 in Table 7.1) are of a shape that normally would be formed by extrusion. This study assumes an extrusion process for these parts using isotropic starting materials such as Gilso carbon, air blown coke and carbon black. No unusual forming problems are anticipated, but very special care must be taken through all the subsequent process steps to avoid warpage and structural faults. Bowing during the pyrolysis steps will have to be avoided. Conventional graphite manufacture can in most cases tolerate 1 - 3 percent chord to arc curvature in long slim structures such as these. In this case, however, even 1/4 percent curvature may be too much to tolerate. It is concluded that machining operations will be necessary on all of the reactor-graphite components.

The blanket lattice bars do not appear to pose any special manufacturing problems. These elements would be extruded as plates slightly larger in width than the widest single bar required. There is, of course, a careful machining and identification task as each bar will have a nearly individual shape in order to properly restrain the internal core elements.

The eight special lattice bars for the lifting rod section are large enough in cross section that some problems in processing may occur. In addition, there is a lot machining required. It may be more reasonable and considerably less costly to use two piece design in this area similar to the regular lattice bars.

The elliptical cross section flow control rods could be extruded to shape but more probably as cylindrical rods milled to final shape because of easier control of warpage.

TABLE 7.1

WEIGHTS OF GRAPHITE COMPONENTS IN THE REACTOR CORE[a/]

Table No. 2

List of Graphite Parts

		Quantity	Size	Approx Wt Each - In lbs	Approx Total Weight
1	Control Rod Channel	4	6" x 6" x 13' (4" ID)	223	880
2	Control Rod	4	4" dia x 13'	135	540
3	Central Core Elements	1436	4" x 4" x 14'9"	156	224,020
4	Blanket Core Element	120	4" x 4" x 14'9"	130	15,620
5	Blanket Lattice Bars	220	2" x 10-1/2" x 14'	240	48,000
6	Blanket Lattice Bars (lift)	8	6" x 10-1/2" x 14'	490	3,920
7	Elliptical Flow Check Rod	208	1-1/2" x 3/4" x 14'	13	2,700
8	Elliptical Flow Check Rod	176	3/4" x 1/2" x 14'	4	700
					295,280
9	Radial Reflector Block	332	43" x 30" x 10"-9"	830	275,560
10	Axial Reflector Block-Top & Bot	200-400	Variations	200-500	110,000
					385,560
					681,840

a/ These values were generated from graphite dimensions shown in Figures 3.8 thru 3.13.

7.4.1 Fabrication (Cont'd)

The four control rod channel pieces and the graphite control rods themselves are simple shapes and do not present any special problems in fabrication and handling.

Tolerances for finished parts will have to be controlled to fairly close limits because of the large number of pieces in the assembly and the possibility of addition of a large number of individual tolerances. There are 42 central core elements plus control rods, plus blanket lattice bars across the diameter, thus an individual tolerance of +.005 in. could at worst add to ±0.25 across the diameter which would not be intolerable. Control of machining to within this range is within the scope of graphite technology.

The molded reflector blocks represent a modest scale up in size from conventional premium graphite, but at the same time they require a finer pore structure than is currently manufactured (except in smaller sizes - about 8 in. across or less). Some manufacturing development will be required to enable production of these reflector blocks. It is fully anticipated that blocks of the indicated size and quality can be produced since the development represents an extension of existing technology. Multiple choices in processing are available, however, and accurate cost estimating will not be possible until the development work is done.

Coating of all surfaces of the inner core elements (parts 1, 2, 3, 4 and 5) with pyrolytic graphite from propylene requires some manufacturing development. It is anticipated that extreme difficulty will be encountered in coating the inside surfaces of the central core elements to anywhere near uniform coating thickness from end to end and that some rather liberal tolerances will have to be allowed.

Quality assurance is a very significant part of the manufacturing task for a premium grade tight specification graphite as required for the MSBR. A complete set of graphite material specifications and testing requirements will

7.4.1 Fabrication (Cont'd)

be needed which will be somewhat more extensive than the specifications for MSRE graphite. One foreseeable problem area for specification and testing is in the verification of the coating integrity for the surfaces of central core elements. It seems almost mandatory that one or more pre-production trial orders for approval and verification of specifications should be entered with prospective graphite manufacturers prior to contracting for actual manufacture.

7.4.2 Handling and Assembly

The 15 ft length and 150 lb weight of the central core elements will make their handling a multiple man job. Extreme care in handling will be necessary to avoid bumping and chipping or cracking of the coating. Careful planning of appropriate jigs and fixtures will be required for proper placement of the core elements.

The small elliptical cross section flow check rods are relatively fragile shapes even in the premium quality of the MSBR design. Some breakage in handling is to be expected. There is a further possible hazard if vibrational and/or hydraulic surge forces cause one of the rods to break during reactor operation. It is conceivable that enough loosening of the assembly would occur for broken pieces to escape from their channels and be carried away by the salt stream to cause obstruction or other damage. It if further conceivable that once initiated, the rod breakage could propagate to adjacent channels because of loosening and creep effects so that a relatively large area became affected. A modification of the design to make the small rods protrusions or ribs integral with the main rods or lattice bars would appear to be a better design structurally even though the self sealing aspect of the hydraulic performance of the core would be sacrificed.

The lattice bars are bulky and heavy enough (about 250 lb each) that mechanical lifting and placement during assembly

7.4.2 Handling and Assembly (Cont'd)

are required. The bars will be rigid and strong but will also have to be treated carefully to avoid chipping by striking against each other during placement.

The large radial reflector blocks are quite heavy (~800 lb each) and will have to be lifted and handled mechanically. The proposed method of holding by large Hastelloy rings in milled slots appears feasible and compatible with conventional graphite technology. Careful fixturing will be required to hold the blocks in place during assembly.

The upper and lower axial reflector regions, although not as yet detailed, do not appear to pose any serious assembly or mounting problems. Support of the upper and lower reflector blocks by Hastelloy in milled slots is again a reasonable method. The machining and fitting in the upper and lower axial regions is complex and each individual piece is machined to a slightly different pattern, however, this is within the current technology of commercial graphite machining.

7.4.3 Attachments

The end caps on the 4 in. x 4 in. blanket rods can probably be attached by a threaded joint cemented by one of the existing high temperature cements for graphite. The spacer buttons for the inner areas of the lattice bars also appear to be within conventional technology for attachments. A modest program of thermal cycling and salt penetration testing of selected joints should be sufficient to demonstrate the practicality of these attachment designs.

7.4.4 Corrosion, Erosion and Permeation of Salt

All of the graphite parts in the reactor will be directly in contact with the molten fuel salt throughout their lifetime in the reactor. All of the graphite parts will, therefore, have to prevent intrusion of the salt at the operating

7.4.4 Corrosion, Erosion and Permeation of Salt (Cont'd)

temperatures and pressures of the reactor. This means that the graphite must have a fine pore structure (like the grade CGB in MSRE) with pore entrance diameters of $< 1\mu$.

Experience in the MSRE showed that graphite was quite compatible with the molten salt environment. "Graphite exposed in the fuel salt for as long as 2.5 years showed no attack by the salt. There was no change in the surface finish and no cracks other than those present before exposure. Only extremely small quantities of salt were found to have penetrated the graphite either through pores or cracks."

The MSBR design will have considerably higher flow rates of salt in the central core region than MSRE. However, complete lack of any surface finish changes in the MSRE graphite suggests that any possible erosion effects are likely to be very small.

7.4.5 Radiation Effects

The radiation stability of graphite at the temperature and energy levels of the MSR has been studied fairly extensively since it was recognized as a serious problem in 1965. Several varieties of graphite have been irradiated to levels of 3×10^{22} n/cm^2 total fluence without gross structural damage. It is fairly well established that an isotropic graphite such as the Gilso-Carbon based on British nuclear graphite will withstand radiation of this level with only moderate dimensional changes (an initial shrinkage of slightly less than 2 percent lineal followed by an expansion to the original volume at the radiation level of 3×10^{22} n/cm^2. Higher levels of total fluence cause the expansion to continue to increase quite rapidly. Other newer graphites with finer pore structures and slightly more isotropic have been irradiated as small specimens in HFIR and have shown even smaller dimensional change (shrinkage less than .5 percent lineal), but again expanding to their original volume at a total

7.4.5 Radiation Effects (Cont'd)

fluence of 3×10^{22} n/cm^2. Efforts to date to produce experimental graphite with greater resistance to radiation damage have largely met with failure, although some samples radiated to levels of nearly 4×10^{22} n/cm have shown no microscopic structure cracks even though expansion has occurred up to 30 volume percent. There is thus hope for modest improvement in overall radiation stability, perhaps to about 4×10^{22} n/cm^2 fluence, but a technology breakthrough is needed before graphite capable of lasting for a reactor lifetime (total fluence 4×10^{23} n/cm^2) at the most desirable core power densities is remotely feasible. The economic incentive for improving graphite life is very great, however. A factor of two improvement (to 6×10^{22} n/cm^2) would save 0.1 unit per kwt on the fuel cycle cost.

In studying the radiation induced graphite dimensional changes in the reactor throughout the graphite lifetime, Figures 7.1 and 7.2 were constructed. Figure 7.1 is constructed from the flux distribution curve of Perry & Bauman[1/] and the dimensional change at fluence of Gilso-Carbon graphite from Eatherly & Kennedy[2/]. Figure 7.2 was similarly constructed using the dimensional change with fluence for AXQ graphite from Eatherly & Kennedy[3/]. The first case (Figure 7.1) represents the limiting case of the maximum dimensional changes in graphite that may be considered tolerable for MSBR graphite. It can also be said that this irradiation data is on a much broader base and better substantiated, particularly in regard to any size effects than for the second case (Figure 7.2) which represents the best graphite to date to be tested in the ORNL program in HFIR.

From Figure 7.1 shows the dimensional change of Gilso-Carbon base graphite. It can be observed that shrinkage

1/ Nuclear Applications, February 1970, page 210

2/ ORNL-TM-2136, ORNL Drawing 68-7974, page 19

3/ ORNL-4541, Figure 3.12, page 25

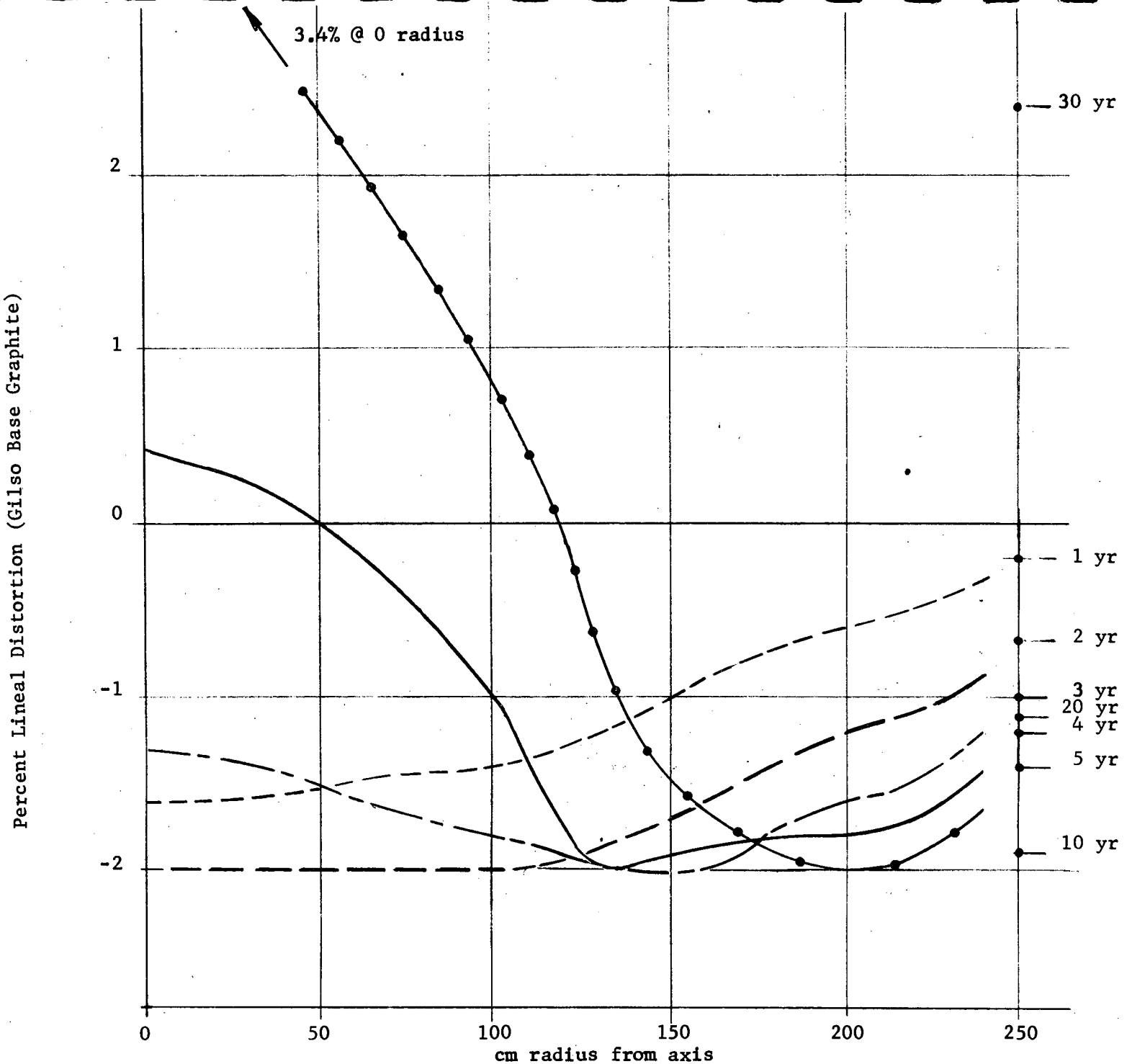

Figure 7.1. Lineal Dimensional Change in Gilso-Carbon Base Graphite

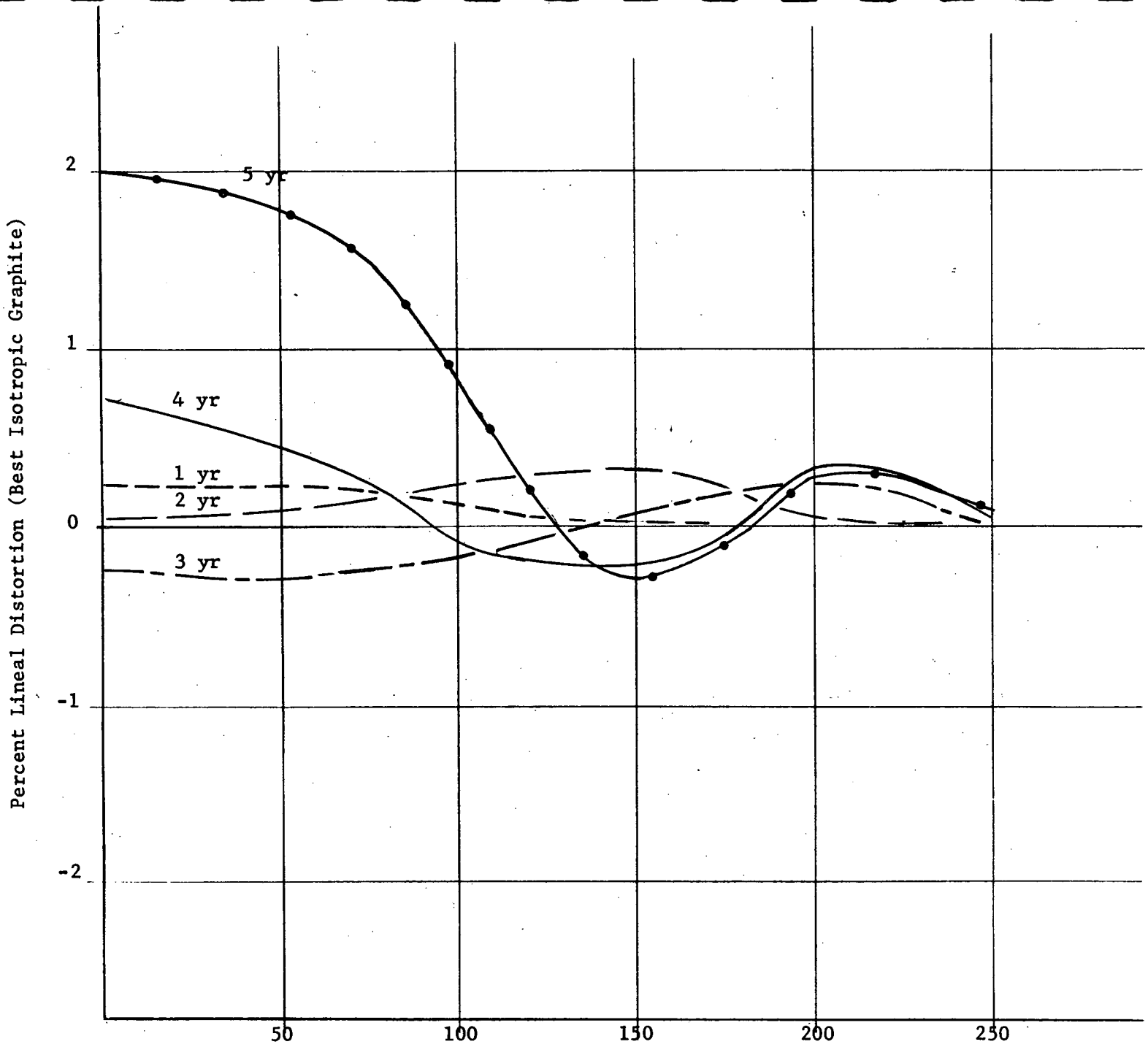

Figure 7.2. Lineal Dimensional Change in AXQ Graphite

7.4.5 Radiation Effects (Cont'd)

of the graphite dominates, reaching its maximum overall effect two and three years of graphite lifetime. At this time the loosening effect would cause the core region to operate at about 0.15 - 0.16 salt fraction instead of the initial value of .13. At the end of the stated four year lifetime, shrinkage is still dominant; and at the end of five years the shrinkage in the outer regions cancels the swelling of the inner core regions so that the lattice bars are not under strain from the core swelling. It would appear that this graphite should certainly be useful for four years and that if it can tolerate 10 percent volume increase without cracking or other structural damage, a lifetime of five years is a possibility.

For AXQ graphite (Figure 7.2) the dimensional changes are much smaller, with slight swelling dominating the overall change. At the end of the stated four year lifetime the lattice bars are under a small but presumably insignificant strain. In this case, however, extending the radiation to five years would cause a growth across the diameter of more than an inch. This strain added to the radiation and temperature induced strains already imposed on the bars themselves could conceivably cause failure.

All of the dimensional changes discussed are considered to be stress free growths or shrinkages. The question of stresses developed within individual core elements due to the combination of temperature and radiation effects has been studied and reported by ORNL[4/]. The radiation induced creep relieves the stresses in all cases studied to values well within the strain capability of the graphite. It would be well to consider the cases of the blanket lattice bars and the large radial reflector blocks because of the large size and the flux gradient, although the time for creep relaxation is much longer and stresses will probably not rise beyond those studied in the central core region.

4/ ORNL-TM-2136, "Graphite Behavior and Its Effects on MSBR Performance," pages 17-31

7.4.5 Radiation Effects (Cont'd)

The whole background of technology of radiation damage effects on graphite in the energy range and total fluence required for the MSBR is relatively small, consequently, some possible inaccuracies in performance prediction can exist. These inaccuracies come from failure of the very small samples to accurately represent the real MSBR graphite case. They include: 1) Possible differences in the actual full scale graphite itself, 2) Possible size effect in radiation, 3) Possible size effect from samples (small samples from small pieces vs small samples from large pieces), 4) Insufficient number of data points and statistical variation. A program for development of MSBR technology should, therefore, include early full scale graphite fabrication in time to provide some radiation damage testing on the actual design specification material.

The radiation lifetime design for the reference MSBR graphite is four years at 80 percent factor or a total fluence of 3×10^{22} n/cm^2. This figure is arrived at by judgment that no structurally damaging porosity will occur until expansion progresses beyond the original volume. Recent experience at ORNL[5/] indicates that this judgment is conservative. The increase in dimensions with radiation is largely the result of generation of extremely small pores. Further irradiation will eventually lead to growth of larger pores and it is possible that graphite lifetime will be determined by monitoring the ^{135}Xe poisoning the core (reactivity) resulting from the increased accessible volume of pores in the graphite. The graphite lifetime will, undoubtedly, be extended beyond the stated four years and may approach five years in this instance.

The problem of keeping the gaseous fission products from entering the graphite is directly related to the breeding ratio of the reactor mainly because of the extremely high

5/ ORNL-4541, page 24

7.4.5 Radiation Effects (Cont'd)

capture cross section of ^{135}Xe and the neutron losses that occur if it is allowed to remain in the high flux region of the core. The graphite must be sealed gas tight, i e, to a permeability level of 10^{-8} cm^2/sec and remain at this level if the graphite itself is to be relied upon to reduce the poison fraction to the desired level for efficient breeding. Efforts to date prove that maintenance of this very low permeability in the extensive radiation environment is extremely difficult and perhaps not practical. There is hope in current work at Oak Ridge that graphite sealing can be developed to a level near the desired goal at least for half or more of the radiation lifetime. Because of the difficulty of this approach, it appears more realistic to concentrate more effort on efficient stripping of the poison gases from the primary salt system and then to rely only upon the level of graphite sealing that appears practically attainable (perhaps 10^{-8} decaying to 10^{-5} at end of lifetime) to achieve the desired breeding ratio.

7.5 Hastelloy N

Comments about the structural materials for the Reference Concept are presented from the viewpoint of the requirements of these materials necessary to satisfy the designed operating conditions. These requirements are:

1 - Corrosion resistance to the fluoride fuel, the coolant salt, and steam;

2 - Oxidation resistance;

3 - Good strength and ductility at elevated temperature;

4 - Stability;

5 - Good fabricability;

6 - Ability to be joined;

7 - Radiation damage resistance;

8 - Commercial availability.

7.5 Hastelloy N

A modified composition of standard Hastelloy alloy N has been specified as the material of construction for the primary system. Although the composition of this alloy has not been finalized work currently in progress points to a composition which will be included within the ranges tabulated in Table 7.2. The composition of standard Hastelloy alloy N has been tabulated for comparison. The modified alloy is being designed specifically for improved radiation damage resistance over that shown by the standard alloy. Exposure of standard Haselloy alloy N to a neutron radiation field, such as the MSRE, results in severe degradation of the mechanical properties of the alloy. Creep-rupture life and rupture ductility are reduced.

The principal cause of this damage was traced to the helium generated in the alloy by the reaction of ^{10}B with thermal neutrons. Restricting the total boron concentration of the standard alloy to a range of 1-5 ppm by careful melting practice does not solve the problem; hence the approach for improving radiation damage resistance has been that of modifying the composition of the alloy. The rationale applied has been to effect alteration of the carbide morphology in the alloy by promoting the formation of very fine uniformly dispersed particulates which might serve as the site for accumulation of the boron. Thereby it is hoped that the generated helium will be distributed uniformly throughout the material, rather than accumulate in grain boundaries. Alteration of carbide morphology has been accomplished by reducing the molybdenum content of the alloy to 12 percent and reducing the silicon content from 1 percent maximum to 0.1 percent maximum. With the addition of low concentrations of elements such as titanium, hafnium, and columbium, dispersions of very fine MC-type carbides have been achieved in the alloy; and mechanical property tests on irradiated specimens of experimental compositions have shown significant improvement in ductility. From these results there is good indication that a modified Hastelloy alloy N can be developed with improved radiation damage resistance.

Table 7.2. Chemical Composition of Standard and Modified Hastelloy N[6/]

Element	Concentration, Weight %[a/]	
	Standard Alloy	Modified Alloy
Nickel	Balance	Balance
Molybdenum	15.0-18.0	11.0-13.0
Chromium	6.0-8.0	6.0-8.0
Iron	5.0	5.0
Carbon	0.04-0.08	0.04-0.08
Manganese	1.0	0.2
Silicon	1.0	0.1
Tungstem	0.5	0.1
Aluminum		0.1
Titanium	0.5	2.0
Copper	0.35	0.1
Cobalt	0.20	0.2
Phosphorus	0.015	0.015
Sulfur	0.020	0.015
Boron	0.010	0.0010
Others, total	0.50	-
Hafnium		1.0
Niobium		2.0

a/ Single values are maximum concentrations.

6/ ORNL-4541, p 26

7.5.1 Primary System

The primary system consists of the reactor, four primary heat exchangers, which transfer heat from the fuel salt to the coolant salt, and four pumps which circulate the molten fuel-salt mixture. These components are designed for a minimum of 30 years service at a maximum normal operating temperature of 1300 F. As previously mentioned, a modified composition of standard Hastelloy N has been specified as the material of construction.

Standard Hastelloy N was developed specifically for use in molten fluoride systems. The chromium content of the alloy was set at 6-8 percent to maximize oxidation resistance and to minimize corrosion by fluoride salts.

Since modified Hastelloy N is in the experimental stage, it is not commercially available. Once the chemistry of the alloy has been finalized, the next step in the development of the material would be to establish industrial scale practices. This would involve the preparation of commercial size heats of the alloy to work out melting and casting procedures, and fabrication processes. It would be very desirable to produce the complete range of mill products required for construction of a reactor, such as heavy plate, sheet, bar, wire, pipe, and tubing. Property determinations should be made on these products. Evaluation of several heats would be desirable for establishing reproducibility. Furthermore, data will be required for presentation of the modified alloy in a code case for its acceptance as a vessel material for nuclear applications. It is possible that documentation of the radiation damage resistance will be necessary before the modified alloy can be accepted as a material of construction.

Standard Hastelloy N was developed specifically for use in molten fluoride systems. The chromium content of the alloy was set at 6-8 percent to maximize oxidation resistance and to minimize corrosion by fluoride salts. Experiments

7.5.1 Primary System (Cont'd)

demonstrate that, indeed, Hastelloy N has sufficient resistance to corrosion when exposed to uncontaminated fuel salt.

Post operation examination of MSRE revealed, however, that all Hastelloy N surfaces exposed to fuel salt contain cracks 5-10 mils deep. The depth of penetration does not appear to vary with location. This suggests that the mechanism of corrosion is not strongly dependent upon stress or temperature.

This phenomena is currently attributed to corrosion caused by impurities such as fission products or by oxidizing conditions of the fuel salt. Fission products, while not entirely discounted, are believed less likely the cause. This conclusion is based on recent ORNL observations that similar (but hardly perceptible) cracking occurred in specimens exposed to fuel salt uncontaminated with fission products. Although these experiments were performed long before the cracking was noticed in MSRE, cracking in the specimens was not noticed until after it was found in MSRE.

The cracking observed in MSRE is quite likely caused by oxiding conditions of the fuel salt. Oxygen contamination due to air and/or water vapor could cause this corrosion. During MSRE's four year life, the fuel salt was drained, the primary system flushed and opened 14 times. It is likely that each time some air entered the primary system. Even though the primary system was purged with helium prior to recharging it with fuel salt, oxygen and water vapor probably would have been absorbed by the graphite and subsequently, driven into the fuel salt when the graphite returned to high temperature.

Oxide contamination is also the probable cause for the cracking in the specimens in the salt loops. This is because oxygen contamination is difficult to avoid in small loops that are opened frequently.

7.5.1 Primary System (Cont'd)

If oxidizing salt conditions are, indeed, the cause of this phenomenon, it can be prevented in MSBR's. Commercial MSBR's will be exposed to atmospheric contamination much less frequently, probably only once every four years. The chemical process plant will remove oxides from the fuel salt on a ten day cycle and maintain the desired oxidation potential.

In addition to preventing and removing excessive oxide contamination, the capability must exist to monitor and maintain close control of the oxidizing potential.

7.5.2 Secondary System

The secondary system in the MSBR consists of the 4 coolant salt circulating pumps, 16 steam generators, and 8 reheaters. Single material construction of these components would present the fewest problems for engineering design. Compatibility with the coolant salt and steam is required and standard Hastelloy N could be specified as the structural material.

The coolant salt proposed for the MSBR is a eutectic mixture of sodium fluoroborate and sodium fluoride. The compatibility of standard Hastelloy N with this salt has been evaluated in tests up to approximately 10,000 hours operation. These tests show corrosion rates between 0.5 and 1.0 mil per year. The aggressiveness of this salt is determined by its water vapor content; and if present much above a level of 500 ppm in the salt, enough HF is formed to result in the rates of corrosion indicated. It is apparent that a tubing failure in a generator or reheater causing steam contamination of the coolant salt will result in accelerated corrosion. Obviously, for minimum corrosion on the salt side care must be taken to purify the salt with respect to its water content.

Data describing the compatibility of standard Hastelloy N with steam is neither extensive nor discouraging. Samples exposed to 1000 F, 3500 psi steam covering a period of approximately 6000 hours show the corrosion behavior of

7.5.2 Secondary System (Cont'd)

Hastelloy N to be somewhat different than that experienced by other materials such as Croloy or Incoloy-800. These latter two alloys form uniform corrosion products; but in case of Hastelloy N, corrosion observed is in the form of iron oxide rich nodules on the surface surrounded by a Cr_2O_3 type oxide. The mechanism for this corrosive reaction is not understood, but is believed to be related to iron pickup from the plumbing in the steam circuit of the test site. Although the corrosion rate based on weight change data is less than 0.25 mil per year for standard Hastelloy N, the depth of these nodules has been observed to run about 0.5 mil after 2000 hours exposure. Future evaluation of standard Hastelloy N in steam should follow the growth of these nodules since this appears to be the controlling mechanism.

7.6 Materials for Chemical Process Plant

The MSBR chemical processes impose severe limitations on containment materials. Compatibility with molten salts, liquid bismuth, fluorine, and in some cases, liquid lithium in bismuth up to 650° C is required. Conventional nickel-and-iron base alloys are not satisfactory becuase of their susceptibility to dissolution and mass transfer in bismuth. The most promising materials appear to be molybdenum, tungsten, rhenium, tantalum and graphite. Molybdenum, tungsten, rhenium and graphite are difficult to fabricate into complex shapes, and tantalum has a high reactivity with environments other than ultra high vacua. In addition, we must consider the possible effects of thorium in bismuth and a high fluoride ion concentration in the molten salt on compatibility. ORNL has concluded that molybdenum has the highest probability for success in this application and has done some very good work with a back extrusion process for vessels and with a combination of welding backed up by a brazed sleeve for joining. This work is continuing, and it is likely that the technology of fabrication with molybdenum will be advanced to the point that many parts of the system can be made of molybdenum.

7.6 Materials for Chemical Process Plant (Cont'd)

Graphite should be considered more seriously for some parts of the processing system - perhaps those units most difficult to fabricate from molybdenum. Although graphite is not readily fabricated in complex shapes in the same sense as the usual metals, it can be extruded and molded and is easily machined. Chemical handling equipment made of graphite is available commercially and includes heat exchangers, pipes, valves, towers, raschig rings, pumps and similar items. High temperature seals are available in graphite "Grafoil" gaskets.

The special problems imposed by the 650° C temperature and containment of the molten salts are less severe than the requirement on the moderator graphite in the reactor core. Considerable technology is at hand and relatively moderate development would be required to fabricate the graphite units in the sizes required and in a grade capable of containing the molten salts and bismuth at 650° C. Some further testing beyond the current ORNL program would be required to establish the stability of the graphite in the several corrosive environments of the processing system.

The most difficult corrosion problem for graphite is as a material for the fluorinator. Fluorine reacts with graphite at the temperatures of interest and the rates of reaction increase so rapidly with pressure[7/] that at about 15 atm flourine pressure $(CF_x)n$ is formed in a very fast reaction at 20° C. Graphite is, therefore, not a likely candidate material for the fluorinator.

Graphite also reacts with the alkali metals to form interstitial compounds. The areas in the processing system where lithium metal in substantial concentration in liquid bismuth is a component to be contained are possible problem areas for graphite.

7/ C&EN, January 12, 1970, page 40, J L Margrave, et al.

8.0 NUCLEAR CHARACTERISTICS

8.1 Basis for Nuclear Performance Evaluation

The reactor arrangement and the configuration of the graphite elements are shown in Figures 7.8-7.13. It can be seen that the reactor consists of several discrete zones: Core, blanket, inlet and outlet salt plena, salt annulus, and reflectors. It is immediately apparent that these zones can be arranged with many variations of geometry and salt fractions. This section describes bases for optimizing the variables.

The following parameters were chosen to maximize the conservation coefficient:

1 - Core, blanket, and reflector dimensions
2 - Core and blanket salt-to-graphite ratio
3 - Fertile concentration in fuel salt

The optimization procedure was subjected to the following constraints:

1 - The peak fast neutron flux, and hence power density, must be such that the graphite lifetime is four years.
2 - The salt composition must be at steady state.
3 - Nuclide removal times must be fixed at values believed to be conservatively consistent with chemical processing capability.

The significance of each of these constraints is discussed in the following.

8.1.1 Peak Fast Neutron Fluence

As described elsewhere in this report, the graphite first contracts under irradiation and subsequently swells back to its original dimensions and beyond. ORNL arbitrarily selected the time at which the graphite returns to its original dimension to be the end of its useful life.

8.1.1 Peak Fast Neutron Fluence (Cont'd)

Although the graphite could actually be used somewhat longer, probably less than 25 percent additional exposure is possible. This is so for two reasons: (1) The graphite is swelling quite rapidly when it returns to its original dimension so that substantial dimensional change will occur with additional exposure. (2) By this time the surface seal has deteriorated and is quite permeable to xenon. Experimental data indicate that a total neutron fluence of 3.2×10^{22} nvt ($E > 50$ kev) is the exposure at which good, commercially available grades of graphite return to their original volume. For a four year exposure time at a plant factor of 80 percent, the peak fast flux limit is 3.2×10^{14} nv ($E > 50$ kev). This value was used as a criterion to be satisfied by the optimization procedure.

8.1.2 Equilibrium Salt Composition

The requirement that the salt composition be at equilibrium means that the steady-state composition exists. Hence, for each significant isotope, the total production rate from all sources (fresh feed, transmutation, radioactive decay, and recycle from chemical processing) must equal the total loss rate (salt discard, burnup, radioactive decay, and removal by chemical processing). It is clear that all important isotopes will equilibrate. That this is true is evident from the following:

- If a radioactive isotope has a short half-life, it will build up in concentration until its decay rate equals its production rate.
- If an isotope has a large neutron absorption cross section, it will build up in concentration until its burnup rate equals its production rate.

8.1.3 Nuclide Removal Times (Cont'd)

Isotope removal is simply proportional to its concentration in the salt; thus, the proportionality constant is analogous to a radioactive decay constant and is identically equal to the inverse mean lifetime with respect to removal, or the removal time. Each isotope can, therefore be assigned a removal time consistent with the process rate of the salt together with the stripping efficiency of the removal mechanism.

^{7}Li, Be, F, and several other isotopes are removed primarily by salt discard. Thus, they have a 4200-day removal time based on a salt discard rate of about 0.5 ft^3/day. If these isotopes were salvaged and returned to the salt, their removal times would be much longer.

Uranium and neptunium isotopes are removed from the reactor system only as new fuel is bred. Thus, although the mean lifetime of a ^{233}U atom in the salt is only about 500 days (based on the burnup rate), the effective removal time is much longer because it depends on the net rate at which bred ^{233}U is extracted from the plant. Based on the net production rate of ^{233}U and the fuel inventory in the primary system, the effective removal time is about 8000 days (not quite the doubling time because the doubling time includes the time required to double the inventory in the process plant as well as that in the primary system).

^{233}Pa is an important isotope to remove not only because it is a parasitic absorber but also because each ^{233}Pa atom which absorbs a neutron constitutes the loss of a potential ^{233}U atom; instead a ^{234}U atom is produced. Since ^{234}U is not removed from the system except by neutron capture, each ^{234}U atom ultimately absorbs another neutron and forms ^{235}U.

8.1.2 Equilibrium Salt Composition (Cont'd)

- If an isotope has chemical properties such that it is removed efficiently from the salt via the helium purge gas or chemical processing, it will build up until its removal rate equals its production rate.

In general, each of these loss mechanisms contribute to limit the concentration of isotopes. Important isotopes are those whose absorption cross sections and abundance are such that they appreciably affect the neutron balance. Important parasitic isotopes are intentionally removed from the salt via chemical processing or the helium purge if they are not self-limiting to sufficiently low concentrations.

There are many unimportant isotopes which do not equilibrate within the 30 year plant life. These build up throughout the life of the plant. For many years they are insignificant as neutron absorbers; towards the end of plant life they may become significant but generally have only a small effect on the neutron balance. These isotopes were treated by ORNL as follows:

- Those which accumulate on the graphite have an average poison fraction characteristic of the life of the graphite. This lumped average is used in the equilibrium composition.
- Those which form stable fluorides and remain in the salt have an average poison fraction characteristic of the salt discard rate. This lumped average is also used in the equilibrium composition.

8.1.3 Nuclide Removal Times

Since the function of the chemical process plant and purge gas system is to maintain parasitic neutron adsorbers at sufficiently low concentrations, the effect of such removal mechanisms is easily factored into the nuclear calculations.

8.1.3 Nuclide Removal Times (Cont'd)

Not only is ^{235}U inferior to ^{233}U as fuel, but each ^{234}Pa atomed leads to a ^{235}U fission or the production of a heavier isotope. Thus, each ^{234}Pa atom formed ultimately results in the absorption of four neutrons. Neutron economy is, therefore, poor when ^{233}Pa is not isolated from the fuel salt.

Ideally the removal time for each isotope would be assigned on the basis of its relative importance as a parasitic absorber. This relative importance is simply the fraction of neutrons absorbed by a parasitic isotope if no processing were done and each isotope were allowed to seek its own equilibrium concentration as defined by its production, decay and burn-up rates. The most important isotope would thus be assigned the shortest removal time. Ideal removal times would then be defined such that all isotopes would be reduced to concentrations such that all parasitic absorbers have equal and sufficiently low poison fractions.

The removal times in Table 8.1 are compromised in accordance with the fact that some isotopes are more readily removed from the fuel salt than others. Table 8.2 shows the ten most significant parasitic absorbers and their poison fractions (discussed below) based on the removal times in Table 8.1. It can be seen that ^{237}Np is the most detrimental parasitic absorber in the reactor other than losses to graphite and major fuel salt constituents. Furthermore, it is not removed from the salt by this chemical process system. It turns out that ^{237}Np, ^{149}Sm, ^{135}Xe, and ^{233}Pa together account for about 80 percent of all parasitic losses. The removal times in Table 8.1 enable this MSBR concept to have a breeding ratio of 1.06 and are believed to be realistic from the chemical engineering standpoint.

Table 8. 1

Nuclide Removal Times

H, He, N, Ne, Ar, Kr, Xe, Rn	50 seconds
Li, Be, C, F, Na, Mg, Al, K, Ca, Fr, Ra, Th	4200 days
B, O, Si, P, S, Cl, Ti, V, Cr, Mn, Fe, Co, Ni Ca, Zn, Ga, Ge, As, Se[a/], Br, Zr[a/], Nb[a/], Mo[a/], Te[a/], Ru[a/], Rh, Pd[a/], Ag[a/], Cd, In, Sn, Sb[a/], Te[a/], I, W	
Tl, Pb, Bi, Po, At, Pa, Pu, Am, Cm	10 days
Se, Rb, Cs	25 days
Sr, Ba, Ce	16 days
Y, Pr, Nd, Gd, Tb, Dy, Ho, Eu	30 days
La	21 days
Pm	29 days
Sm	27 days
Eu	51 days

a/ These are noble metals which have a 20 second removal time for nuclear considerations (see test).

Table 8.2

Ten Most Significant

Parasitic Neutron Absorbers[a/]

	Poison Fraction[b/]
^{237}Np	0.789×10^{-2}
^{149}Sm	0.524×10^{-2}
^{135}Xe	0.501×10^{-2}
^{233}Pa	0.460×10^{-2}
^{151}Sm	0.821×10^{-3}
^{147}Pm	0.582×10^{-3}
^{143}Nd	0.569×10^{-3}
^{143}Pr	0.173×10^{-3}
^{152}Sm	0.142×10^{-3}
^{155}Eu	0.102×10^{-3}

a/ Other than primary constituents

b/ Values were obtained from a ROD calculation performed by ORNL

8.1.3 Nuclide Removal Times (Cont'd)

The noble metals (starred in Table 8.1) exhibit peculiar behavior which warrant special explanation. These isotopes are believed to plate out onto solid surfaces. Hence for the purpose of nuclear analysis, they are regarded as leaving the salt with a short removal time (20 sec).

The portion which accumulates on graphite surfaces is treated as a lumped absorber whose average value is determined by the accumulation rate and the rate of graphite replacement. A small percentage of these noble metals remain in solution and are eventually removed by the process plant.

For the purpose of material balances in the processing plant the 10-day removal time is correct. This value is consistent with the actual concentration in the salt and the rate at which it enters the process plant. For nuclear calculations the 20 sec removal time together with an average, lumped fission product poison fraction predicts the correct neutron balance and salt composition.

8.1.4 Poison Fraction

Neutrons are absorbed by ^{135}Xe which resides in graphite, fuel salt, and purge gas bubbles. For nuclear analysis, it is not necessary to describe how the xenon is distributed among these materials; all that matters is that it be present in the proper amount. Detailed analyses by ORNL of the xenon production rate and its rate of migration into graphite and purge gas bubbles suggested that it is reasonable to attempt to reduce neutron losses to 0.5 percent (0.005 neutron absorptions in ^{135}Xe per absorption is fissile isotopes). MSRE experience offered some confidence in the ability to achieve this value. Thus, 0.5 percent became the target value and the accepted poison fraction used for nuclear analysis.

8.1.4 Poison Fraction (Cont'd)

For nuclear analysis, graphite was assumed to contain no ^{135}Xe gas; bubbles were disregarded (except for their effect on salt density), and all the ^{135}Xe was assumed to reside in the fuel salt. In order to satisfy the equilibrium criterion built into the code, it was necessary to assign an artificial removal time (50 sec) to ^{135}Xe such that the calculated equilibrium concentration, removal rate, burnup rate, and decay rate were correct and consistent with the true production rate. For a power of 2250 MWT, the ^{135}Xe production rate (allowing for some ^{135}I removal) is 6.9×10^{-6} moles/sec. For a poison fraction of 0.5 percent the burnup rate of ^{135}Xe must be 6.6×10^{-7} moles/sec or only 9.5 percent of the production rate. The balance must be removed via decay or the purge gas. Only about 1 percent of the xenon decays in the primary system; hence about 90 percent of the ^{135}Xe produced must be removed by the purge gas system.

8.1.5 Delayed Neutrons

Since some delayed neutrons are born outside the reactor, full benefit of these neutrons is not realized. These neutrons are assumed lost. To account for this loss, a fictitious absorber is added to the salt which removed the fraction of neutrons born out of the reactor. This value was determined by an analysis of a precursor history. It is clear that the fraction of delayed neutrons lost is a function of salt residence time in the various reactor regions, and the residence time in the external circuit.

In the Reference Concept the delayed neutrons which appear in the external circuit have an effective absorption fraction of 0.32 percent (0.0032 neutrons absorbed in this fictitious absorber per neutron absorbed in fuel).

8.1.6 Conclusions

The preceding sections describe the bases for comparing the relative merits of various MSR concepts. These are the bases used by ORNL and, in our judgement, they are fundamentally correct, appropriate, and suitable for MSR's which operate on or near their equilibrium cycle during a large portion of the plant life. Since MSBR's approach equilibrium after 4-6 years, when started up on ^{235}U or Pu, the equilibrium performance is fairly representative of the average over the plant life.

8.2 Basis for Concept Selection

The ORNL MSBR Reference Design was selected from the four candidates indicated in Table 8.3. The first entry listed is a large low power density reactor for which the graphite lasted throughout the life of the plant (30 years). This concept was rejected by ORNL because its annual yield is too low, only 2 percent. The third entry is similar to the Reference Design discussed here except that the radial blanket region is a nonfuel bearing fertile salt which is isolated from the fuel by a graphite and/or Hastelloy barrier. A fuel-fertile salt, like that in the MSBR Reference Design, occupies the core region. This concept was rejected by ORNL because the replaceable barrier between the two fluids was considered to be too great an extension to known technology. The fourth entry is the two-fluid system which received much attention by ORNL several years ago. This concept had a fuel bearing salt which was kept separate from another salt containing fertile material. Both salts occupied the core and were kept separated by confinement to separate flow channels. This concept was rejected on the basis that is impractical to rely on the graphite elements to keep the salts separate.

Table 8.3

Calculated Nuclear Performance of 1000 Mw(e) MSBR Design Concepts

Design Concept (In increasing order of complexity)	Typical Performance Value			
	Conservation Coefficient, $(mw(t)/kg)^2$	Breeding Ratio	Fissile Inventory (kg)	Annual Fuel Yield (% yr)
1. Single-fluid, nonreplaceable core	5	1.06	2300	2.0
2. Single-fluid, two-zone replaceable core (reference MSBR)	15	1.05	1500	3.2
3. Single-fluid, replaceable core, with blanket	50	1.07	900	7.0
4. Two-fluid, replaceable core, with blanket	75	1.07	700	8.0

8.2 Basis for Concept Selection (Cont'd)

We agree with ORNL that the fourth concept is impractical. We also agree that the first should not be regarded as a current reference design because its doubling time is too large. The third has many features which make it attractive as an advanced concept. In addition to its superior nuclear performance, it possesses the following characteristics:

1 - Graphite vessels, fabricated from graphite cloth, having dimensions and strength suitable for the core basket, are within present technology.

2 - There is greater assurance of maintaining a tight core assembly throughout the graphite lifetime when all the replaceable graphite is packaged into a basket.

3 - The blanket region provides the annulus for clearance between permanent graphite and the basket.

4 - The damage fluence on the basket would be about 1/4 of that at core center. Hence, only about two baskets would be required for a 30 year plant life.

5 - A reasonable amount of leakage between the two salts would be of little consequence.

6 - A depleted, thorium rich blanket would eliminate fast neutron production in the reflector and thereby greatly reduce the neutron flux on the vessel.

7 - Heat generation in the radial reflector and vessel would be very much smaller, thereby simplifying the cooling requirements.

For the current reference design, however, we agree with ORNL. This concept has the best chance of success because it is relatively simple in design and it does not depend on unproven graphite seals.

8.3 Optimization of Core Design

The method of optimizing the core design for maximum conservation coefficient CC is based upon the projection of the largest gradient. The partial derivative of CC with respect to each of the variable parameters is computed by changing the variable and calculating the corresponding change in CC. The variable giving rise to the largest partial derivative is then changed until its derivative is no longer the largest or until it is against a previously set limit. Another variable, now having the largest derivative, is adjusted in the same way. This procedure continues until all variables give rise to near zero gradients or are against limits.

This procedure was programmed into the computer code ROD (Reactor Optimum Design) by ORNL and used for analysis of MSR's. This code also couples the calculation of the equilibrium salt composition with nuclear reaction rates. Although the production rates of fission products is a function of power alone, the burnup rates depend upon the neutron flux and energy spectra. Hence, the equilibrium salt composition is dependent upon the way in which neutrons distribute themselves into the various isotopes; conversely, the way neutrons distribute themselves in the isotopes depends upon the salt composition. Following is a description of the iterative procedure used for determining simultaneously, the equilibrium salt composition and the nuclear performance:

An initial guess of the salt composition is made and cell averaged, multi-group cross sections are calculated for each region having a unique cell geometry or salt fraction.

This salt composition, together with the multi-group cross sections are then used in a neutron diffusion calculation which computes the critical concentration of fuel as well as isotope production and removal rates via transmutation and burnup.

8.3 Optimization of Core Design (Cont'd)

These production and burnup rates are used in the equilibrium calculation, along with feed and discard rates, and removal times, to determine a new and better estimate of the equilibrium salt composition.

This new salt composition is used in subsequent nuclear calculation to determine improved estimates of isotope production and burnup rates.

After a few iterations, these calculations converge. The equilibrium salt composition is consistent with all isotope production and removal rates, and the nuclear analysis produces a neutron balance for the equilibrium salt composition.

The above procedure completes the analysis for a specific concept on which no optimization is done. If the concept is to be optimized, the following addition calculations are done:

Each of the parameters declared to be variable for optimization (region dimensions, salt fractions, thorium concentration, fissile concentration, etc) is perturbed individually. The effect of each perturbation on the conservation coefficient is expressed as a gradient, $\partial CC/\partial X_i$.

The variable having greatest effect on CC is then varied stepwise, updating the equilibrium salt composition after each step, until all gradients approach zero or until all variables are restrained by predetermined limits.

The incremental steps are made small to avoid massive changes or oscillations in the iteration procedure. Experience and judgment are required in determining the maximum permissible size of the incremental steps. The code reduces the size of the steps as the derivatives become small.

These procedures were appraised and found to be appropriate for MSR design and evaluation. Because the procedure is entirely automated, it is free from clerical errors normally incurred from data manipulation. The optimization procedure prints out a

8.3 Optimization of Core Design (Cont'd)

complete, updated reactor description after each step change. This includes the new equilibrium salt composition, the reactor configuration, a neutron balance, and the new figure-of-merit. Hence, the reactor engineer can follow the logic of the optimization procedure and can assess the validity, practicality and effect of each step change in design. We have found that this reactor concept was prepared for computation correctly, and the calculated results were interpreted correctly. Thus, we have confidence that the nuclear characteristics of the Reference Design are described adequately.

8.4 Review of Input Data

Erroneous input to nuclear analysis codes can readily be divided into two classes: First, that which cannot survive unnoticed because the code simply will not function as desired or gives obviously wrong results; second that which can survive indefinitely. The latter is of concern. Although it is impossible to make certain that each individual input number is correct, some assessment can be made. Through repeated use, most of the fixed data blocks entered on cards are constantly reviewed and eventually purged of errors. Fission product yields and cross sections, for example, are entered on cards. The values used by ORNL were compared with other sources. Large differences were not found.

The preparation of multi-group cross sections for input to ROD (an undocumented code virtually unknown outside of MSR activities at ORNL) is almost entirely automated and, thus, free of clerical errors. The well documented (but not widely used) S_n code, XSDRN together with a cross section library tape (123 group structure) was used to calculate the multigroup cross sections.

8.4 Review of Input Data (Cont'd)

Cross section library data is massive in quantity, difficult to evaluate, generally inaccessible to change, and easily neglected or ignored. We have no reason to suspect the cross section libraries used by ORNL are in error, but they are a source of mild concern. The XSDRN cross section library is an in-house set. Its origin is undocumented and virtually unknown. It is unevaluated except, perhaps, for the ^{233}U cross sections. The procedure for entering data into the XSDRN cross section library tape is awkward, complex and subject to error. Thus, we regard the cross section library, as being in need of review and updating.

8.5 Nuclear Analysis Methods

In the equilibrium composition calculation 29 isotopes are treated explicitly. In this calculation it is assumed that the salt is homogeneous throughout the primary system. This assumption is valid except for isotopes whose half-lives are short compared to the loop transient time, about 13 seconds. Such isotopes are of little interest, however, because they do not build up to significant concentrations. Hence for all isotopes which significantly influence the neutron balance, this assumption is valid. the problem is formulated as a steady state rate balance in which the sum of all production rates are set equal to the sum of all removal rates. There is one equation for each isotope. This set of coupled equations is then solved simultaneously for the desired isotope concentration. Calculated results for several isotopes were examined, and it was found that, indeed, the total production rate equalled the total loss rate.

The method of nuclear analysis is 2D synthesis by coupled 1D calculations. The 2D synthesis is achieved by a buckling iteration procedure. Because the procedure used by ORNL is not documented, it will be described briefly in the following:

8.5 Nuclear Analysis Methods (Cont'd)

Starting with the highest energy group, a radial (or axial) neutron diffusion calculation is performed with an assumed buckling. This calculation yields a first estimate of the radial leakage and thus, the radial buckling for this energy group. This buckling is then used in an axial calculation to estimate the axial leakage and, hence, the axial buckling. These two calculations are iterated until the perpendicular leakage from each calculation is equal to the parallel leakage computed by the other calculation. This buckling iteration technique is repeated for each energy group and recycled through all groups until convergency criteria are satisfied, on upscattering, multiplication factor, fluxes, equilibrium composition, and the object function (conservation coefficient) if optimization is performed. (ROD is not the only code employing a buckling iteration technique; CORA (a few-group diffusion code) developed by Idaho Nuclear Corporation, and BYSIN, developed by General Electric and applied to LMFBR studies, uses similar buckling iteration techniques. Westinghouse also developed a variation of this procedure at the Bettis Laboratory.) This iteration procedure applies only to bucklings for the core region. Perpendicular neutron leakages for reflector regions are assumed to be zero. This is a crude treatment of noncore region leakage; however, these regions are small and the core is large. Thus neutron leakage, especially perpendicular leakage from noncore regions has a small effect on the total neutron balance and the approximations used are quite satisfactory.

The validity of ROD was established for MSR application by comparing calculations with the rigorous 2D diffusion code CITATION with those of ROD. The problems were nearly identical. They differed only in that ROD was unable to accommodate as much geometric detail as a true 2D code. Specifically, ROD was unable

8.5 Nuclear Analysis Methods (Cont'd)

to account for the curvature of the axial reflectors. The results of this comparison are shown in Table 8.4. It can be seen that breeding ratios and neutron balance data are in close agreement. It can also be seen that ROD underpredicts peak fluxes by 5-6 percent.

The close agreement of the neutron balance suggests that the equilibrium composition was calculated correctly. Had these calculations differed significantly, it would follow that isotope production and removal rates resulting from nuclear reactions would also be different and the equilibrium composition as computed by ROD would be in question.

In this comparison the salt composition as computed by ROD was used in the CITATION analysis. Since both analyses employed the same group cross sections, this comparison in no way reflects upon the input data.

For completeness it should be said that nine energy groups are normally used by ORNL: Four coupled thermal groups (permitting upscattering) and five fast groups. The fast and thermal groups divide at 1.86 ev. This group structure is entirely adequate for MSR spectra. Resonance integrals are treated by the Nordheim formulation. The Nordheim treatment requires knowledge of the escape probability of a neutron from a fuel lump. This probability is calculated from a Monte Carlo code in which the geometry of a single cell can be described. Reflective boundary conditions are applied to the cell so that the effect of adjacent fuel lumps is accounted for in the calculated escape probability. Hence the effect of adjacent fuel lumps is accounted for rigorously, and the Dancoff correction factor is exactly zero. Since the Nordheim treatment applies only to regular geometries, e g, slab, cylindrical or spherical fuel lumps, it is necessary to define an equivalent cylindrical or slab fuel lump which has the same neutron escape probability as in the actual design. This

Table 8.4

Comparison of ROD and CITATION Calculations of the MSBR Reference Design[a/]

	CITATION	ROD	Difference
Identification: CC58			
Breeding ratio (excluding processing loss)	1.0661	1.0647	-0.0014
Peak damage flux, 10^{14} neutrons $cm^{-2} sec^{-1}$ (E>50 kev)	3.42	3.20	-0.22
Peak power density, w/cm^3	69.1	65.2	-3.9
Neutron balance, absorptions			
^{232}Th	0.9904	0.9889	-0.0015
^{233}Pa	0.0017	0.0017	
^{233}U	0.9248	0.9248	
^{234}U	0.0811	0.0809	-0.0002
^{235}U	0.0752	0.0752	
^{236}U	0.0085	0.0085	
^{237}Np	0.0059	0.0059	
^{9}Be	0.0071	0.0071	
^{7}Li	0.0160	0.0160	
^{6}Li	0.0023	0.0023	
F	0.0206	0.0206	
Graphite	0.0517	0.0522	+0.0005
Fission products	0.0196	0.0196	
Delayed Neutrons lost	0.0032	0.0032	
Leakage	0.0234	0.0244	+0.0010
Sum (Ne)	2.2315	2.2316	+0.0001

a/ USAEC Report ORNL-4449 Nolten-Salt Reactor Program Semiannual Progress Report, August 31, 1969, Page 59, H F Bauman and W R Cobb

8.5 Nuclear Analysis Methods (Cont'd)

This equivalence is established via the Case, deHoffmann and Placzek theory which relates a mean chord length of a regular geometry to an escape probability. In this way the calculated escape probability for the actual geometry is used to define an equivalent cylindrical or slab geometry having the same escape probability which can be treated by the Nordheim formulation.

It is clear that neither the cylinder nor slab approximation is correct for the Nordheim treatment; however, it is found that either approximation leads to nearly identical results. The difference in the resonance integrals is small and the effect upon the group cross sections and ultimately upon the neutron balance, is small.

After iterating the salt composition and the nuclear analysis calculations to convergence, the multi-group cross sections were recycled through XSDRN to account for any changes in spectra of self-shielding arising from the difference in final salt composition from the initial composition.

8.6 Reactivity Coefficients

The isothermal temperature coefficients of reactivity for the ORNL Reference Design are reported[1/] to be -3.22×10^{-5} per degree C for the fuel salt, 2.35×10^{-5} for the graphite, and -0.87×10^{-5} total for the core. The large negative value for the fuel salt is due primarily to the Doppler coefficient of ^{232}Th. The delayed neutron fraction (unweighted) is deduced from ORNL calculations to be about 0.0015; similarly, we have estimated the prompt neutron lifetime to be about 3×10^{-4} seconds. This large lifetime gives rise to MSR's slow kinetic behavior relative to other reactor concepts.

1/ ORNL-4541, p. 35, O L Smith and J H Carswell

8.6 Reactivity Coefficients (Cont'd)

Since the total isothermal reactivity coefficient is a fairly small difference between the salt and graphite components, it has a substantial uncertainty - perhaps 40 percent. Thus, the amount of excess reactivity required to override the power reactivity decrement is poorly known.

The reactivity of the fuel salt, however, is probably known to within 10 percent. Since it is prompt, negative, and relatively large, it can be depended upon to terminate fast transients following hypothetical reactivity insertions.

Analog computer simulation studies were performed by ORNL[2/] for an MSR very similar to the Reference Concept. Transients were initiated with the reactor operating at steady state at 25 percent of full power. For a step insertion of 0.15 percentΔk/k (approximately one-half of the reactivity worth of all control rods) followed by negative control reactivity in the amount of 0.01 percentΔk/k/sec (-0.28 percentΔk/k total), the outlet salt temperature increased by only 100 F. The power peaked at 144 percent within about two seconds and returned to its original level in about 25 seconds. Of course, a scram would insert negative reactivity much faster.

Because of the ability to adjust the fuel concentration via chemical processing, there is no reason why MSR's should have any more excess reactivity in control rods than needed to override the power reactivity decrement. Thus an MSR operating at steady state and full power will probably have less than 0.03 percentΔk/k excess reactivity in control rods.

2/ ORNL-4548, p. 79, S J Ditto, J L Anderson, and W H Sides, Jr

8.6 Reactivity Coefficients (Cont'd)

We have not considered all possible accidents, but it is clear that MSR's possess several features which make them relatively safe from the standpoint of reactivity accidents compared with other concepts:

1 - High heat capacity

2 - Low excess reactivity

3 - High salt boiling temperature

4 - Large prompt negative salt expansion temperature coefficient of reactivity

5 - Long prompt neutron lifetime

8.7 Gamma and Neutron Heating

ORNL has calculated the neutron and gamma heating as a function of radius and height along the core midplane and at the height of peak graphite temperature. At core center it is reported that neutron scattering produces about 1.7 w/cc in the graphite while gamma scattering produces about 4.5 w/cc. We have made independent estimates of these values and found them to be entirely reasonable. This heat source determines the peak graphite temperature which also appears reasonable (1307 F).

8.8 Fission Product Heating

ORNL has estimated conservatively the decay heat production following shutdown after a long interval of full power operation. This heat production provides the basis for heat removal requirements of the drain tank and fuel salt storage tank cooling systems.

Figure 8.1 shows the decay heat production following shutdown after a long period of full power operation. It can be seen that the heat production inside and on the surface of graphite will be substantial for several days (see curves A and B). Similarly, the heat production will remain high in the heat exchangers, the processing plant, the off-gas system, and fuel salt.

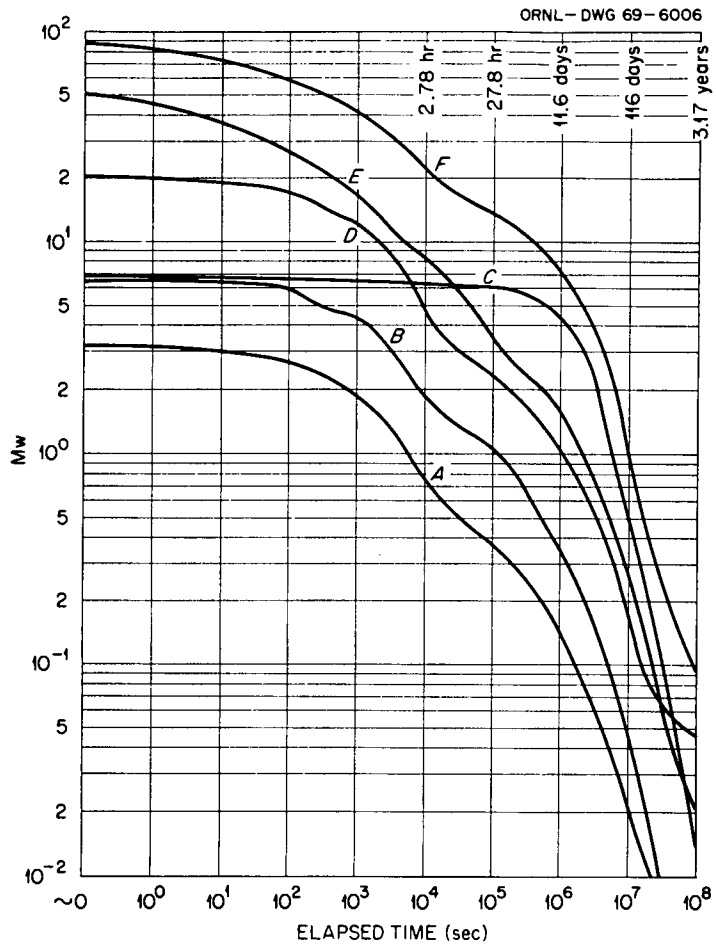

Figure 8.1 Afterheat Distribution with Saturation Concentrations of Fission Products in a 1000 MW(e) Single-Fluid MSBR Fueled with ^{235}U.[a]

Curve A. Afterheat in core region produced by Kr and Xe diffused into the graphite plus heating by 10% of the total noble metal fission products assumed to be plated on surfaces.

Curve B. Afterheat in the four heat exchangers produced by 40% of total noble metal fission products plated on metal surfaces.

Curve C. Afterheat in the chemical processing system produced by protactinium and long-lived fission products.

Curve D. Afterheat in the off-gas system produced by Kr and Xe, plus heating by 50% of the total noble metal fission products.

Curve E. Afterheat produced by fission products which remain dispersed in the primary salt.

Curve F. The sum of all curves, A through E.

In curve A the concentration of Kr + Xe is that which produces a poison fraction of 0.0056 $\delta k/k$ and is obtained by gas sparging on a 30-second removal cycle. Curves A, B, and D are based on the assumption that the noble metals are either deposited immediately on metal and graphite surfaces or enter the off-gas system immediately. In curves A, B, and D the afterheat includes that from decay of the daughter products of the noble metals and gases.

[a]Reference: USAEC Report ORNL-4541, p. 43, J. R. Tallackson

8.8 Fission Product Heating (Cont'd)

During normal operation salt circulation transports heat out of the primary circuit. Immediately after a sudden drain, however, there is no way to remove residual heat from the primary system other than by radiation from the vessel to the cell walls. This would undoubtedly result in overheating and probable damage to the Hastelloy N. Such an incident does not present a health hazard to personnel or the public; but it is a threat to the investment. This potential problem can be solved in either of two ways: The probability of such a sudden drain can be made acceptably low; or, an emergency cooling system can be provided.

Three types of failures could give rise to a relatively fast drain: Failure of the primary piping; freeze valve failure; and loss of all electrical power, including emergency power. It appears that the probability of a salt drain due to freeze valve failure can be made sufficiently low. The probability of piping failure can be reduced sufficiently by conservative design. Loss of electrical power can be made unlikely by having a standby turbine-generator, as proposed by ORNL, and perhaps one or two diesel-driven generators as well. Pony motors on the primary, secondary, and feedwater pumps could provide 2-3 percent flow, enough to prevent overheating if emergency power is available.

9.0 FUEL SALT DRAIN TANK SYSTEM

The drain tank is located below and to the side of the primary circuit such that salt will automatically drain into it whenever the freeze plug is thawed. It is also connected to the catch basin so that any salt leaks will drain into the tank. The drain tank will be kept hot and ready to receive salt. It must have considerable excess capacity to accommodate some coolant salt should fuel and coolant salts ever become mixed. The drain tank must have sufficient cooling capacity to accommodate fission product decay heat soon after shutdown and for indefinite storage. Ideally, the cooling system should not require any external source of power, and it should be sufficiently reliable that it will safely contain the fuel salt indefinitely with only minimal attention. The drain tank should have a backup container in case the tank itself should develop a leak. In addition, a second tank is needed for use in case the salt must be drained while the normal drain tank is out of service for maintenance or repair.

ORNL proposed that the drain tank be made of Hastelloy N and be surrounded by a stainless steel open-topped backup tank. Heat transfer by radiation across a 3 in. wide annulus between the vessels would cool the tank wall and bottom head. The backup vessel would be about 3-4 in. thick, serve as a gamma shield, and permit in-service inspection. Small jet pumps in the bottom of the tank would transfer fuel salt into the primary system and to the reprocessing plant. ORNL recently recognized that small jet pumps do not function well, if at all, with the anticipated back pressure. Thus, methods of transferring salt are being reevaluated.

The ORNL concept calls for 1028 Hastelloy N thimbles extending through the top head, downward into the fuel salt. Each thimble is about 2 in. OD and contains a croloy or stainless steel bayonet tube filled with NaK. There are two barriers between the NaK and the fuel salt: The bayonet tube and the thimble. Heat transfer occurs by radiation across the nitrogen filled annulus. The NaK is heated and flows by natural convection to a water pool at an elevation about 60 ft above the drain

9.0 FUEL SALT DRAIN TANK SYSTEM (Cont'd)

tank. In the water pool the NaK tubes are again encased inside larger tubes to provide a double barrier between NaK and water. Again heat transfer is by radiation. ORNL proposes that each NaK circuit have an EM pump to retard flow and thereby prevent freezing when heat loads are low.

The drain tank also provides a second function: It provides a two-hour holdup of fission product gases before they pass into the off-gas system. The purpose of this is to reduce the heat load on the off-gas system. It is expected that a substantial portion of the noble metals produced will enter the drain tank with the purge gas and deposit on the tank wall and thimbles. Decay of noble metals together with fission product gases in the drain tank will produce a steady state heat load estimated by ORNL to be about 18 MWt. Such deposits will continue to build up throughout the life of the plant.

One aspect of the drain tank cooling system is of concern: In the mechanical design and arrangement of the 1028 thimbles in a 14 ft diameter vessel, it will be difficult to assure adequate quality control. Once assembled and installed, it will be impossible to test for NaK leakage into a thimble.

During normal operation when the drain tank contains very little salt the gamma and beta rays incident upon the drain tank walls would produce about 2 kw/ft^2. In this concept, in which the inner tank is 1 in. thick and the outer tank is 3-4 in. thick, most of the incident energy will appear as heat. ORNL originally proposed that the vessel walls be cooled by flowing about 600 gpm of fuel salt over the internal surface. Because of the difficulty in returning this flow of salt to the primary system, the amount of overflow will, undoubtedly, be reduced by a least a factor of four. Thus, another method of cooling the drain tank wall must be found. Cooling by radiation to the cell walls will be inadequate because the external surface temperature required to radiate 2 kw/ft^2 is about 900 F. Circulation of coolant between the inner and outer vessels will probably be required.

9.0 FUEL SALT DRAIN TANK SYSTEM (Cont'd)

The problem of cooling the fission gases in transient from the bubble separator to the drain tank has received little consideration. The energy release rate due to the birth of gammas and betas is about 0.1 MW/ft^3 of fresh purge gas. Although most of the gammas and betas will deposit their energy in the container walls, even a small fraction absorbed in the gas will cause the gas temperature to rise very rapidly. If only 1 percent of the energy is absorbed in the gas, it will cause the gas temperature to rise at the rate of about 100 F/sec. A satisfactory mechanical design of the piping system has not yet been proposed. It is clear that much engineering of this system remains.

The inventory of fission gases in the drain tank has been estimated to be about 2.5×10^8 curies out of a total of 8×10^8 curies of fission gases in the entire plant when operating at steady state. This quantity of activity in a single tank will require special containment considerations.

10.0 FUEL SALT CHEMICAL PROCESSING SYSTEM

10.1 Objectives

The principal objectives of the chemical processing system are the isolation of protactinium-233 (Pa) from regions of high neutron flux during its decay to uranium-233 (U), and the removal of fission products, corrosion products and other impurities. The chemical processing system is an integral part of the reactor system and is operated continuously. This allows processing of the primary fuel salt on a short cycle with acceptable small inventories of salt and fissile materials.

10.2 Description

The chemical processing system, shown in Figure 10.1, can be divided into nine functional areas. These are:

1 - Uranium Removal

Fluorination of fuel salt to remove uranium as UF_6 with subsequent recovery and purification of UF_6.

2 - Protactinium Extraction

The removal of protactinium from fuel salt by reductive extraction into bismuth.

3 - Rare Earth Removal

The removal of rare earth fission products from fuel salt by reductive extraction into bismuth.

4 - Fuel Salt Reconstitution

The reconstitution of purified fuel salt by addition of uranium and makeup salt to the processed fuel carrier salt.

5 - Rare Earth Transfer

The transfer of rare earth fission products from bismuth to lithium chloride.

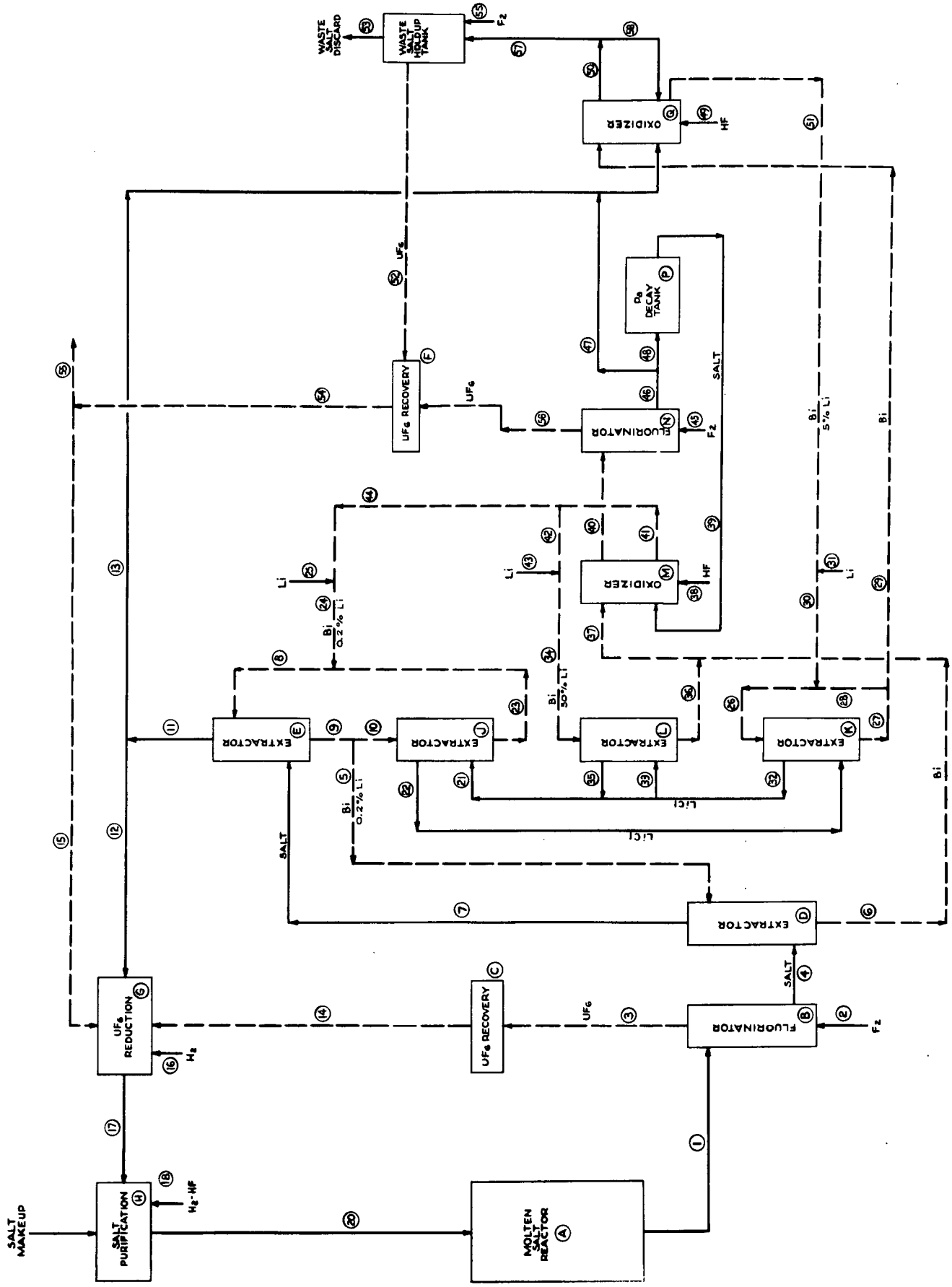

Figure 10.1 Chemical Processing System Flow Diagram

10.2 Description (Cont'd)

6 - Trivalent Rare Earth Extraction

The removal of trivalent rare earth fission products from lithium chloride by reductive extraction into bismuth containing a high concentration of lithium metal reductant.

7 - Divalent Rare Earth Extraction

The removal of divalent rare earth fission products from lithium chloride by reductive extraction into bismuth containing a high concentration of lithium metal reductant (50 percent).

8 - Protactinium Decay - Uranium Recovery - Divalent Rare Earth Removal

The decay of protactinium to uranium with subsequent recovery of uranium as UF_6 by fluorination. An oxidation process transfers all divalent rare earth metals and protactinium from the bismuth phase into the salt phase, thereby purifying the bismuth stream for reuse.

9 - Trivalent Rare Earth Removal - Salt Purge

An oxidation process transfers all trivalent rare earth metals from the bismuth phase into the salt phase. A portion of salt leaving the rare earth removal section is purged to a waste salt holdup tank where uranium is recovered by fluorination prior to discarding the salt.

A complete process description for this system by section is given below. In this description, the letters and numbers refer to Figure 10.1.

10.2.1 Uranium Removal

A portion (1)[a/] of the circulating fuel salt from the Molten Salt Reactor (A)[b/] is reacted with fluorine gas (2) in a fluorination reactor (B). The following reaction occurs at 1000-1110 F:

a/ Numbers shown in parentheses in this section refer to specific streams shown diagrammatically in figures.

b/ Letters in parentheses refer to specific blocks in figures.

10.2.1 Uranium Removal

$$UF_{4\ (salt)} + F_{2\ (g)} \longrightarrow UF_{6\ (g)} \qquad (1)$$

About 99 percent of the UF_4 is removed from the fuel salt stream (1). The volatile UF_6 stream (3) from the fluorinator (B) is processed in a UF_6 recovery plant (C) to remove volatile fission products. The UF_6 recovery plant is a series of adsorptions-desorptions over sodium fluoride pellets. The decontaminated UF_6 is recovered from the recirculating fluorine gas in a series of cold traps.

10.2.2 Protactinium Extraction

The fuel salt (4) leaving fluorinator (B) is essentially free of uranium, but contains all the protactinium at reactor concentration. This stream (4) is processed in extractor (D) where it is contacted countercurrently at 600-640° C with a small amount (5) of liquid bismuth (about 0.07 gpm bismuth/gpm salt) containing 0.2 mole percent lithium. The following reaction occurs:

$$PaF_{4\ (salt)} + 4\,{}^{7}Li_{\ (Bi)} \longrightarrow Pa_{\ (Bi)} + 4\,{}^{7}LiF_{\ (salt)} \qquad (2)$$

The PaF_4 in the salt is reduced to protactinium metal which is then soluble in the bismuth phase (6) leaving extractor (D). Any UF_4 that remains in the salt (4) leaving the fluorinator (B) also is reduced in the same manner as the PaF_4 and transfers to the bismuth stream (6) along with the Pa. The salt phase (7) leaving extractor (D) is essentially free of protactinium and uranium but contains the rare earth fission products.

10.2.3 Rare Earth Removal

The salt (7) containing the rare earth fission products (divalent and trivalent) is countercurrently contacted at 600-640° C in extractor (E) with a recycle liquid bismuth stream (8) (about 14 gpm bismuth/gpm salt) containing 0.2 mole percent lithium. These rare earth fission products are reduced to the metal phase

10.2.3 Rare Earth Removal (Cont'd)

by lithium (similar to equation 2) and then become soluble in the bismuth phase (9) leaving the extractor (E). A very small portion of this bismuth stream (5) is routed to the protactinium extraction column (D). The major portion (10) of this bismuth stream is routed to the Rare Earth Transfer extractor (J) which will be discussed in Section E below. The salt stream (11) leaving the rare earth extractor (E) is conveyed (12) to a fuel salt reconstitution section (Section D following). A very small portion of this salt stream (13) is purged from the system (described in Section H).

10.2.4 Fuel Salt Reconstitution

The purified fuel salt (12) is void of uranium and protactinium, has most of the fission product poisons removed, requires the addition of uranium, thorium, and beryllium fluorides to bring the salt back to its preferred composition, requires the adjustment of the UF_4/UF_3 ratio, and must be treated to remove potentially harmful impurities such as bismuth, nickel and iron fluorides.

In the first step, the UF_6 (14, 15) from the UF_6 recovery sections (C, F) is dissolved into the purified fuel salt (12). Hydrogen (16) is then added to the reactor (G) to effect the following reaction at about 600° C:

$$UF_{6\,(salt)} + H_{2\,(g)} \longrightarrow UF_{4\,(salt)} + 2HF_{(g)} \qquad (3)$$

The salt stream (17) leaving the reduction reactor (G) must have the UF_4/UF_3 ratio readjusted by the addition of a hydrogen-hydrogen fluoride stream (18) to a special reactor (H) containing nickel gauze packing. The following reactions occur at about 600° C:

1 - control of the UF_4/UF_3 ratio

$$UF_{4\,(salt)} + 1/2\ H_{2\,(g)} \longrightarrow UF_{3\,(salt)} + HF_{(g)} \qquad (4)$$

10.2.4 Fuel Salt Reconstitution (Cont'd)

2 - removal of nickel and iron fluorides

$$NiF_{2\,(salt)} + H_{2\,(g)} \longrightarrow Ni + 2HF_{(g)} \qquad (5)$$

3 - trapping bismuth entrained and/or dissolved in the salt by forming a bismuth-nickel intermetallic compound on the nickel gauze packing.

Since the salt (17) is deficient in both thorium fluoride and beryllium fluoride, these compounds are added (19) to bring the salt compositions up to the desired value. The purified salt stream (20) is passed through a porous metal filter prior to its return to the reactor (A).

The entire salt purification loop is thus accomplished.

10.2.5 Rare Earth Transfer

The major portion (10) of the bismuth stream from the rare earth extractor (E) is contacted with lithium chloride (21) in extractor (J). In this extractor (at 640° C) the rare earth metals in the bismuth stream (10) are effectively converted to the divalent and trivalent rare earth chlorides which are soluble in the lithium chloride stream (22).

$$3\,^{7}LiCl + RE_{(Bi)} \longrightarrow RECl_3 + 3\,^{7}Li_{(Bi)} \qquad (6)$$

$$2\,^{7}LiCl + RE_{(Bi)} \longrightarrow RECl_2 + 2\,^{7}Li_{(Bi)} \qquad (7)$$

The bismuth stream (23) leaving extractor (J) is recycled to rare earth extractor (E) with a small amount of makeup bismuth (24) corresponding to that bismuth routed (5) to the protactinium extractor (D). This bismuth makeup (24) is reconstituted to the 0.2 mole percent reductant level by the addition of lithium (25). The bismuth stream leaving extractor (J) is nearly saturated with thorium (23); however, the distribution ratios are such that practically no thorium is transferred to the lithium chloride phase along with the rare earth chlorides.

10.2.6 Trivalent Rare Earth Extraction

The trivalent rare earths are removed from lithium chloride (22) in extractor (K) at 640° C by contacting with a bismuth stream (26) that contains about five mole percent of lithium reductant. Thus, the trivalent rare earth chlorides are transferred to the bismuth phase.

$$RECl_3 + 3\,^7Li_{(Bi)} \longrightarrow 3\,^7LiCl + RE_{(Bi)} \qquad (8)$$

The major portion of the bismuth stream (27) leaving the extractor (K) is recycled (28) while a smaller portion (29) is sent to the trivalent rare earth removal - salt purge section (see Section I). The recycle bismuth stream (28) is reconstituted with purified bismuth (30) prior to recycling (26) to the trivalent rare earth removal system (K). The purified bismuth stream (30) is adjusted to the five mole percent reductant level by the addition of lithium (31).

The major portion (32) of the lithium chloride stream from extractor (K) is returned to extractor (J). A small portion (about two percent) of this stream (33) is diverted to the divalent rare earth extraction process (L).

10.2.7 Divalent Rare Earth Extraction

A small portion (about two percent) of lithium chloride stream (33) is treated in extractor (L) to remove the divalent rare earth fission products. This is accomplished by contacting with a bismuth stream (34) containing 50 mole percent lithium reductant causing the divalent rare earth chlorides to be reduced and transferred to the bismuth phase.

$$RECl_2 + 2\,^7Li_{(Bi)} \longrightarrow 2\,^7LiCl + RE_{(Bi)} \qquad (9)$$

The purified lithium chloride stream (35) rejoins the major stream (32) to the metal transfer extraction process (J).

10.2.8 Protactinium Decay - Uranium Recovery - Divalent Rare Earth Removal

The bismuth stream (6) from the protactinium extractor (D) and the bismuth stream (36) from the divalent rare earth extractor (L) join (37) to oxidation tower (M). In this oxidation tower (M), the protactinium and divalent rare earth metals in the bismuth stream (37) are oxidized with hydrogen fluoride (38) in the presence of a recycle salt stream (39). The following oxidation reaction occurs for both the protactinium and the rare earths:

$$Pa_{(Bi)} + 4HF_{(g)} \longrightarrow PaF_{4(salt)} + 2H_{2(g)} \qquad (10)$$

The protactinium and rare earth fluorides are now soluble in the salt and leave (40) the oxidation tower (M). The bismuth stream (41) is now purified. A portion (42) is recycled to the divalent rare earth extractor (L) after the addition of the appropriate amount of lithium reductant (43). The remainder (44) is routed to the salt rare earth extractor (E) after the addition of the appropriate amount of lithium reductant (25).

The salt stream (40) from the oxidizer (M) contains not only the pro tactinium fluoride and rare earth fluorides, but also uranium fluoride resulting from protactinium fluoride decay in decay tank (P). This salt stream (40) is reacted with fluorine (45) in reactor (N) to effect the reaction described in equation (1). The volatile UF_6 stream (56) is processed in a recovery plant (F) to remove volatile fission products as described in Section I. The combined streams (56, 52) of UF_6 (54) are recycled (15) to the fuel salt reconstitution section (Section D). A small amount of net UF_6 (55) is removed from the system.

A small portion (47) of the effluent salt (46) from fluorinator (N) is purged (Section I).

The major portion of this salt (48) is held in a decay tank (P) to effect the decay of protactinium fluoride to uranium fluoride. The effluent (39) from the decay tank (P) is recycled to the oxidation reactor (M).

10.2.9 Trivalent Rare Earth Removal - Salt Purge

The bismuth stream (29) from the trivalent rare earth extractor (K) is oxidized with hydrogen fluoride (49) in oxidation tower (Q) in the presence of salt streams (47) taken from the stream to the decay tank (P) and from the salt stream (13) from extractor (E). The trivalent rare earths are oxidized to the fluorides as in equation (10) and thus become soluble in the salt stream (50) leaving the oxidizer (Q). The purified bismuth stream is recycled (30) to the trivalent rare earth extractor (K) after the addition of the lithium reductant (31).

A small portion (57) of the salt stream (50) from the oxidizer (Q) is held up in a waste salt tank (R) where any remaining uranium fluoride is periodically fluorinated (55) out and recovered as UF_6 (52). The salt discard (53), free of uranium, contains all the rare earth fission products, corrosion products, and other impurities present in the fuel salt. The remaining salt stream (58) from oxidizer (Q) is recycled.

10.3 Material Balance

The material balance values for the chemical processing flow sheet in Figure 10.1 are given in Table 10.1. The basic values, supplied by the Oak Ridge National Laboratory, are based on a breeding ratio of 1.0626, an effective protactinium removal time of 10 days, and an average rare earth removal time of 25 days. Concentrations and individual removal times for the fission products are shown in Table 10.2. Some of the ORNL values shown in Table 10.1 were converted to obtain consistent units (gallons, cubic feet, pounds, pound-moles, hours). The values reported are sufficient to allow a stream component material balance.

Table 10.3 lists the sizes, capacity, and required staging of various vessels in the chemical processing plant as calculated by ORNL.

Table 10.1

Flow Rates and Concentrations for Chemical Processing System Flow Sheet for Figure 10.1

Stream No.	1	2	3	4	5	6	7	8
Description	Salt	F2*	UF6	Salt	Bi	Bi	Salt	Bi
GPH	56.8				3.9	3.9		744.0
SCFH		27.0	27.0					
Lb/Hr		2.82	26.2					
Lb Mole/Hr	23.0	0.0754	0.0754			1.53		288.0
X-LiF	0.717							
X-BeF_2	0.160							
X-ThF_4	0.120							
X-UF_4	3.3×10^{-3}			3.3×10^{-5}				
X-PaF_4	3.5×10^{-5}						2.6×10^{-6}	
X-ZrF_4	1.6×10^{-5}							
X-REF_2	8.6×10^{-6}						8.6×10^{-6}	
X-REF_3	4.5×10^{-5}						4.5×10^{-5}	
X-$RECl_2$								
X-$RECl_3$								
X-Li					2.0×10^{-3}	1.8×10^{-3}		
X-Th					2.5×10^{-3}	1.5×10^{-3}		
X-Pa					2.5×10^{-5}	5.3×10^{-4}		
X-Zr						2.0×10^{-2}		
X-RE(2)								
X-RE(3)								

Table 10.1 (Cont'd)

Stream No.	9	10	11	12	13	14	15	16
Description	Bi	Bi	Salt	Salt	Salt	UF_6	UF_6	H_2
GPH	744.0	740.1						
SCFH								
Lb/Hr								
Lb Mole/Hr					0.022			
X-LiF								
X-BeF_2								
X-ThF_4								
X-UF_4								
X-PaF_4				9.75×10^{-7}				
X-ZrF_4								
X-REF_2			4.0×10^{-6}	4.0×10^{-6}	4.0×10^{-6}			
X-REF_3			2.6×10^{-5}	2.6×10^{-5}	2.6×10^{-5}			
X-$RECl_2$								
X-$RECl_3$								
X-Li	2.0×10^{-3}	2.0×10^{-3}						
X-Th	2.5×10^{-3}	2.5×10^{-3}						
X-Pa	2.5×10^{-5}	2.5×10^{-5}						
X-Zr								
X-RE(2)								
X-RE(3)								

Table 10.1 (Cont'd)

Stream No.	17	18	19	20	21	22	23	24
Description	Salt	H_2 - HF	Salt	Salt	LiCl	LiCl	Bi	Bi
GPH				56.8	2004.0		740.1	3.9
SCFH								
Lb/Hr				1580.0				
Lb Mole/Hr			8.52×10^{-3}	24.6				
X-LiF				0.717				
X-BeF_2			0.415	0.160				
X-ThF_4			0.585	0.120				
X-UF_4				3.3×10^{-3}				
X-PaF_4								
X-ZrF_4								
X-REF_2								
X-REF_3								
X-$RECl_2$					3.0×10^{-3}	3×10^{-3}		
X-$RECl_3$					0.3×10^{-6}	1.0×10^{-6}		
X-Li								
X-Th								
X-Pa								
X-Zr								
X-RE(2)								
X-RE(3)								
X-$ThCl_4$						6.7×10^{-8}		

Table 10.1 (Cont'd)

Stream No.	25	26	27	28	29	30	31	32
Description	Li	Bi	Bi	Bi	Bi	Bi	Li	LiCl
GPH		496.8	496.8		0.238	0.238		
SCFH								
Lb/Hr								
Lb Mole/Hr	0.0184						5.99×10^{-3}	
X-LiF								
X-BeF_2								
X-ThF_4								
X-UF_4								
X-PaF_4								
X-ZrF_4								
X-REF_2								
X-REF_3								
X-$RECl_2$								3.0×10^{-3}
X-$RECl_3$								0.3×10^{-6}
X-Li		0.05			0.05			
X-Th					4.2×10^{-4}			
X-Pa								
X-Zr								
X-RE(2)					1.06×10^{-4}			
X-RE(3)					4.7×10^{-3}			

Table 10.1 (Cont'd)

Stream No.	33	34	35	36	37	38	39	40
Description	LiCl	Bi	LiCl	Bi	Bi	HF	Salt	Salt
GPH	39.6	0.0233		0.0233	3.9233		40.8	
SCFH								
Lb/Hr								
Lb Mole/Hr								
X-LiF							0.72	
X-BeF_2								
X-ThF_4							0.23	
X-UF_4							5.4×10^{-5}	
X-PaF_4							1.9×10^{-3}	
X-ZrF_4							0.03	
X-REF_2							0.01	
X-REF_3							3.3×10^{-4}	
X-$RECl_2$	3.0×10^{-3}		3.0×10^{-3}					
X-$RECl_3$	0.3×10^{-6}		1.0×10^{-14}					
X-Li		0.50		0.50				
X-Th				4.0×10^{-11}				
X-Pa								
X-Zr								
X-RE(2)				0.011				
X-RE(3)				3.6×10^{-4}				

Table 10.1 Cont'd)

Stream No.	41	42	43	44	45	46	47	48
Description	Bi	Bi	Li	Bi	F_2	Salt	Salt	Salt
GPH	3.9233	0.0233		3.9				
SCFH								
Lb/Hr								
Lb Mole/Hr			4.87×10^{-3}					
X-LiF								
X-BeF_2								
X-ThF_4								
X-UF_4								
X-PaF_4								
X-ZrF_4								
X-REF_2								
X-REF_3								
X-$RECl_2$								
X-$RECl_3$								
X-Li								
X-Th								
X-Pa								
X-Zr								
X-RE(2)								
X-RE(3)								

Table 10.1 (Cont'd)

Stream No.	49	50	51	52	53	54	55	56
Description	HF	Salt	Bi	UF_6	Salt	UF_6	F_2	UF_6
GPH		0.085	0.238		0.085			
SCFH								
Lb/Hr								
Lb Mole/Hr								
X-LiF					0.747			
X-BeF_2					0.095			
X-ThF_4					0.135			
X-UF_4								
X-PaF_4								
X-ZrF_4					0.008			
X-REF_2					0.003			
X-REF_3					0.012			
X-$RECl_2$								
X-$RECl_3$								
X-Li								
X-Th								
X-Pa								
X-Zr								
X-RE(2)								
X-RE(3)								

Table 10.2

Removal Times and Concentrations of
Fission Products in the Chemical Processing Plant

REACTOR: POWER: 2250 MWt

SALT INVENTORY: 1683 ft^3 ~ 5500 lb-moles

BREEDING RATIO: 1.0626

CHEMICAL PLANT:

Fission Product	Mole Fraction in Salt Feed 1	Removal Time, Days	Mole Fraction in Purified Salt 12
Protactinium	3.5×10^{-5}	10.28	9.75×10^{-7}
Strontium	4.97×10^{-6}	16.8	2.01×10^{-6}
Yttrium	5.98×10^{-6}	30.0	3.98×10^{-6}
Barium	1.90×10^{-6}	16.8	7.67×10^{-7}
Lanthanum	4.82×10^{-6}	22.1	2.64×10^{-6}
Cerium	1.28×10^{-5}	16.6	5.12×10^{-6}
Praseodymium	5.62×10^{-6}	30.0	3.75×10^{-6}
Neodymium	1.45×10^{-5}	30.0	9.70×10^{-6}
Promethium	1.48×10^{-6}	29.4	9.77×10^{-7}
Samarium	1.48×10^{-6}	26.9	9.10×10^{-7}
Europium	3.16×10^{-7}	51.0	2.54×10^{-7}
Gadolinium	2.23×10^{-8}	30.0	1.49×10^{-8}
Terbium	9.55×10^{-10}	30.0	6.37×10^{-10}
Dysprosium	7.06×10^{-11}	30.0	4.71×10^{-11}
Holmium	1.42×10^{-13}	30.0	9.46×10^{-14}
Erbium	2.44×10^{-15}	30.0	1.63×10^{-15}

Table 10.3

Sizes of Selected Vessels in the Chemical Processing Plant

Vessel	Volume ft^3	Diameter, in.	Height, ft	No. Theoretical Stages
Fluorinator (B)	na[a/]	8	12	na
Protactinium Extractor (D)	na	3	na	6
Rare Earth Extractor (E)	na	7	na	3
Rare Earth Transfer Extractor (J)	na	13	na	3
Trivalent Rare Earth Extractor (K)	na	12	na	1
Divalent Rare Earth Extractor (L)	na	na	na	2
Protactinium Decay Tank (P)	130	na	na	na

a/ na, not available

10.4 Technology

The technology relating to the chemical processing system is functionally divided into unit process areas. Items such as pumps, flow controls, level controls, intermediate storage and purge volume, stream analyses, and modes of operation will be discussed in separate sections after the functional areas.

10.4.1 Uranium Removal

The uranium fluorination system, called the "Fluoride Volatility Process", has been researched at ORNL since 1954[1/]. Sufficient laboratory work was done to permit the successful operation of a batch pilot plant to recover uranium from the molten salt ($NaF-ZrF_4-UF_4$) used in the Aircraft Reactor Experiment. The advantages of this process when compared to conventional aqueous processing routes are: (a) the small volume of fission product waste; (b) the convenient form of the UF_6 product which is easily converted to UF_4 for fuel recycle; (c) the virtual elimination of processing criticality hazards; and (d) the high decontamination factors attainable for the UF_6 product. The main disadvantage for this process is the extremely corrosive nature of the fluorine-molten salt mixtures at these high processing temperatures.

A simplified process flow sheet for a continuous fluorination process is shown in Figure 10.2. The fluorination process is divided into four parts: the fluorination system, the UF_6 decontamination system, the cold trap system, and the purge gas system. This fluorination system described is applicable to all three fluorination sections in the chemical processing system, although the fluorination of the waste salt stream will probably be done batch wise.

Fuel salt[1/] from the reactor is contacted with recycled fluorine gas in reactor (B) at 1000-1110 F (550-600°C) where the uranium is converted to the volatile UF_6 (3) according to equation (1). The lower limit to the operating temperature is 930 F (500°C),

1/ ORNL-TM-1852, p. 20

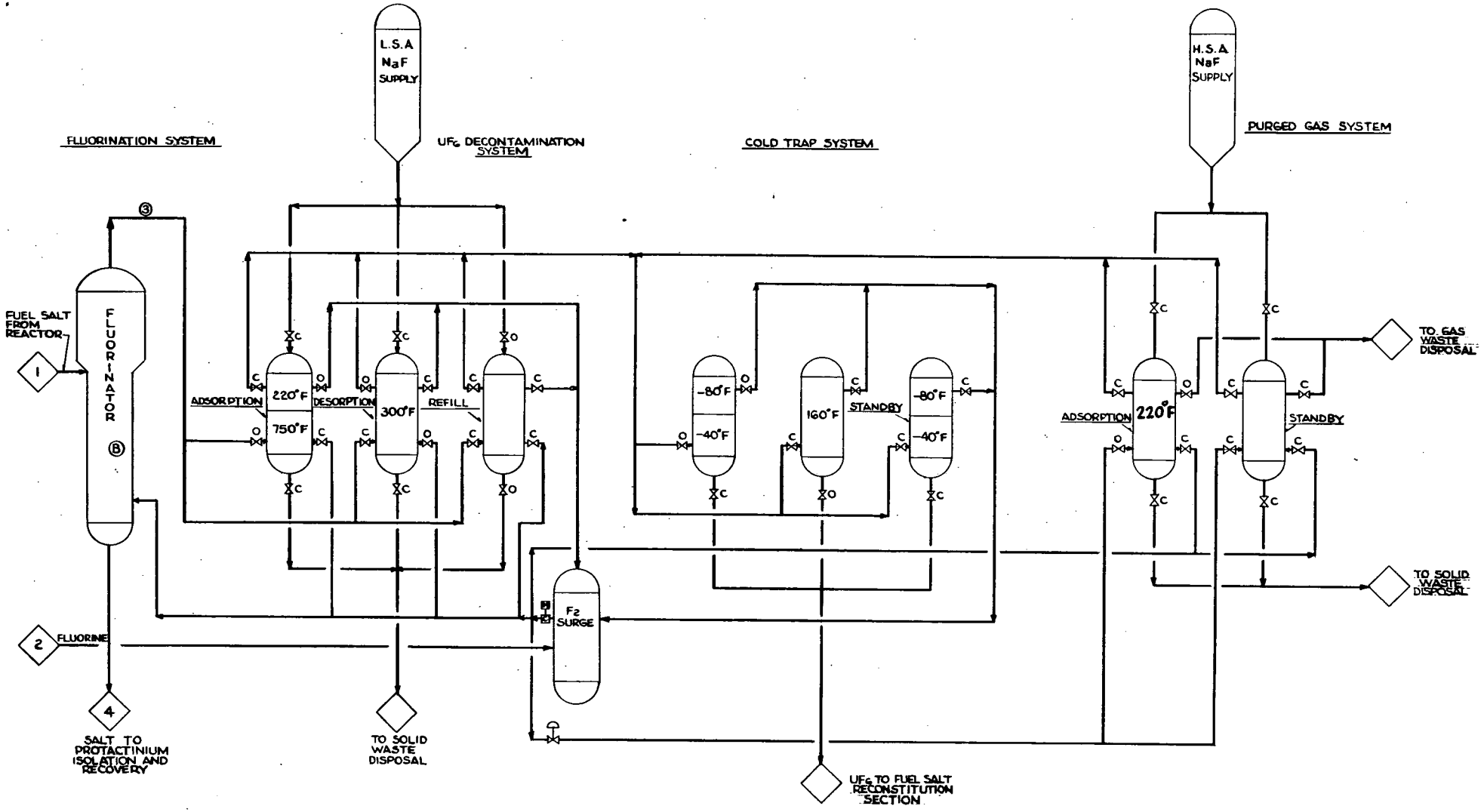

Figure 10.2 Process Flow Sheet for Continuous Fluorination of Uranium in Molten Salt

10.4.1 Uranium Removal (Cont'd)

the melting point of the fuel salt[2/]. About 99 percent of the uranium is removed here. The UF_6 enters into a decontamination system consisting of pelletized sodium fluoride (NaF)beds operating at various temperatures.

The UF_6 decontamination system consists of three NaF beds; one on the adsorption cycle, one on the desorption cycle, and one being refilled with fresh, low-surface area, NaF pellets. The adsorption cycle has two temperature zones, 750 and 250 F. As the UF_6 and fluorine gas pass through the 750 F zone, fission product fluorides are irreversibly adsorbed on the NaF. When this gas passes through the 250 F zone, the UF_6 is reversibly adsorbed on the NaF. The fluorine gas is sent to a surge drum for recycle to the fluorinator (B) after addition of fresh makeup fluorine (2).

At the end of the adsorption cycle, the bed is heated to 300 F to begin the UF_6 desorption cycle. Recycle fluorine gas is used to desorb the UF_6 from the NaF and carry it to the cold trap system. The cold trap system also has three units; one condensing the UF_6 out of the fluorine gas, one vaporizing the condensed UF_6 for recovery, and one on standby.

The cold trap condensing the UF_6 has two temperature zones, -40 and -80 F. Most of the UF_6 condenses in the -40 F zone. The -80 F zone serves as a backup for any UF_6 that may pass through the -40 F zone. The fluorine gas passes through to the purge drum for recycle. For recovery of the UF_6 from the cold trap system, the unit is heated to 160 F where the UF_6 vaporizes and passes on to the fuel salt reconstitution section.

Since the fluorine is recycled, a buildup of volatile fission products will occur in the gas phase; hence, a small portion of the gas (ca.10 percent) is purged from the surge drum. In order to insure against escape of UF_6, the purged gas is passed through

2/ ORNL-4541, p. xv

10.4.1 Uranium Removal (Cont'd)

a high surface area NaF adsorption system at 220 F prior to being purged to a gas waste disposal system. When this adsorption bed contains a significant amount of UF_6, the bed temperature is increased to 300 F with fluorine gas flow to desorb the UF_6 and transport it to the cold trap system. During this period, the standby adsorption tower is used to remove the UF_6 from the purge gas stream.

Fluorination System

A summary of the reported fluorination data is given in Table 10.4. Both batch and continuous runs have been made with reasonable success. One can conclude that fluorination is technically feasible for recovering about 99 percent of the uranium from molten salts.

Reaction Mechanism

Interpretation of experimental results indicate the following reaction mechanism:

1 - Dissolution of fluorine into the molten salt

$$F_{2(g)} \longrightarrow F_{2(salt)} \qquad (11)$$

2 - Conversion of UF_4 to UF_5 intermediate

$$UF_{4(salt)} + 1/2\ F_{2(salt)} \longrightarrow UF_{5(salt)} \qquad (12)$$

3 - Conversion of UF_5 intermediate to UF_6

$$UF_{5(salt)} + 1/2\ F_{2(salt)} \longrightarrow UF_{6(salt)} \qquad (13)$$

4 - Removal of UF_6 from salt

$$UF_{6(salt)} \longrightarrow UF_{6(g)} \qquad (14)$$

5 - Overall reaction

$$UF_{4(salt)} + F_{2(g)} \longrightarrow UF_{6(g)} \qquad (1)$$

The dissolution of fluorine into the molten salt is probably the rate-controlling step for the overall reaction (equation 1).

TABLE 10.4 - FLUORINATION OF UF_4 TO UF_6 IN MOLTEN SALTS

Reference	Process	Salt Components	Salt Components	UF_4 Concn in Salt	Feed Rates Salt, Gph	Feed Rates F_2, Scfh	Temp °C	Salt Residence Time, Min	Superficial Gas Velocity, Fpm at Stp	UF_4 Removed, %	F_2 Utilization %	Remarks
ORNL-2626	Batch	$LiF-BeF_2$	48-52 m/o	0.8 m/o	-	-	550	150	-	99.	-	
ORNL-2626	Batch	$LiF-BeF_2ThF_4$	71-16-13 m/o	0.014 m/o	-	-	600	90	-	99.	-	
ORNL-3122	Cont	$LiF-NaF-ZrF_4$	26-37-37 m/o	1.0 w/o	0.0247	-	700	40	-	98-99	-	1" Ø Column
ORNL-3122	Cont	$LiF-NaF-ZrF_4$	26-37-37 m/o	2.0 w/o	0.0247	-	625	40	-	98-99	-	1" Ø Column
ORNL-3936	Cont	$LiF-NaF-ZrF_4$	26-37-37 m/o	0.32 w/o	0.235	0.160	600	42	0.49	99.4	15-30	1" Ø Column, 4' liquid height
ORNL-4037	Cont	$LiF-NaF-ZrF_4$	26-37-37 m/o	0.50 w/o	0.326	0.531	650	30	1.63	99.4	-	1" Ø Column, 4' liquid height
ORNL-4119	Cont	$LiF-NaF-ZrF_4$	26-37-37 m/o	1.16 w/o	0.160	0.500	600	61	1.54	99.89	15.6	1" Ø Column, 4' liquid height
ORNL-4119	Cont	$LiF-NaF-ZrF_4$	26-37-37 m/o	1.16 w/o	0.354	0.572	600	28	1.76	99.62	30.0	1" Ø Column, 4' liquid height
ORNL-3791	Cont[a/]	$LiF-BeF_2$[a/]	69-31 m/o[a/]	0.3 m/o[a/]	4.67[a/]	10.2[a/]	550[a/]	120[a/]	1.40[a/]	99.99[a/]	33.3[a/]	4.75" Ø Column, 10.3' height[a/]

a/ These are calculated values for a preliminary process plant design.

10.4.1 Uranium Removal (Cont'd)

Therefore, the rate at which the gas is solubilized should be determined as a function of temperature, pressure, agitation and/or bubble size. This information is not now available. Equally important, the equilibrium fluorine solubility in the molten salt leaving the fluorinator should be obtained as a function of temperature. Excess fluorine will consume lithium reductant in the Pa extractor thereby increasing the cost of processing.

The existence of the UF_5 intermediate has been postulated 3/. From the experimental data, it is surmised that all of the UF_4 will be converted to UF_5 before any significant UF_6 is formed if the fluorine is bubbled through a liquid bed height of 5 to 6 feet. At reaction temperatures of 1000-1110 F (550-600°C), the vapor pressure of the UF_6 is 680-850 atmospheres 4/. Therefore, the UF_6 will rapidly vaporize in the molten salt solution and pass into the fluorine gas phase.

Based on the per pass conversion of fluorine, the experimental evidence 5/ indicates that the conversion of UF_4 to UF_5 (equation 12) is significantly faster than the subsequent conversion to UF_6 (equation 13). No experimental kinetic data are available, however, for either the individual or overall reaction. The equilibrium constant for reaction (1) should be quite large, although experimental data are also lacking in this area.

At conditions used for fluorination of uranium in molten salt, the equilibrium between PuF_3 and PuF_6 is unfavorable at the low mole ratios of fluorine/PuF_3 used. Thus, the UF_4 should be removed as UF_6 before any PuF_6 is formed. The ORNL experience indicates this is the case; i.e., PuF_3 does not volatilize at these conditions 6/. Thus, no method exists at this time to recover plutonium from the fuel salt in the chemical processing plant.

3/ ORNL-4344, pp. 6 and 321
4/ "Reactor Handbook", Vol II, Interscience Publishers, p. 252, (1961)
5/ ORNL-4344, p. 7
6/ ORNL-4344, p. 7

10.4.1 Uranium Removal (Cont'd)

Therefore, plutonium builds up in the Pa decay tank and in the waste salt holdup tank and is eventually discarded. It is discarded at the rate of about 6 kg/yr at equilibrium operation.

Heat Generation

There are two sources of heat generation in the fluorination or uranium in molten salts; the heat of reaction, and the fission product decay heat. The exothermic heat of reaction for equation 1 is reported as 292 000 Btu/lb-mole at 1022 F (550°C) 7/. This value is small compared to the decay heat.

The fission product decay heat is dependent upon the elapsed time for the salt between the nuclear reactor and the fluorination reactor. In the Reference Concept 2/ the total heat production in the chemical process plant is about 7 Mw. The decay heat can be calculated for any combination of stream composition and holdup time.

Materials of Construction

Molten salt - fluorine mixtures are so corrosive at these temperatures that no known material of construction can contain these compounds. Where fluorine and molten salt are present, ORNL proposes that the equipment be protected from corrosion by freezing a layer of salt on the vessel wall (Figure 10.3). This is accomplished by cooling the reactor wall. The heat necessary for maintaining molten salt adjacent to frozen salt is provided by the decay of fission products in the salt stream. Thus, the successful operation of a continuous fluorination system depends upon the heat balance that must be maintained in this reactor. This should not be difficult to do.

The ability to maintain a frozen salt on the fluorinator wall for long periods of time under operating conditions has not been demonstrated yet. If the frozen wall should release from the container, a plug in the salt outlet line may occur if the frozen

7/ ORNL-TM-2578, p. 57
2/ ORNL-4541, p. xv

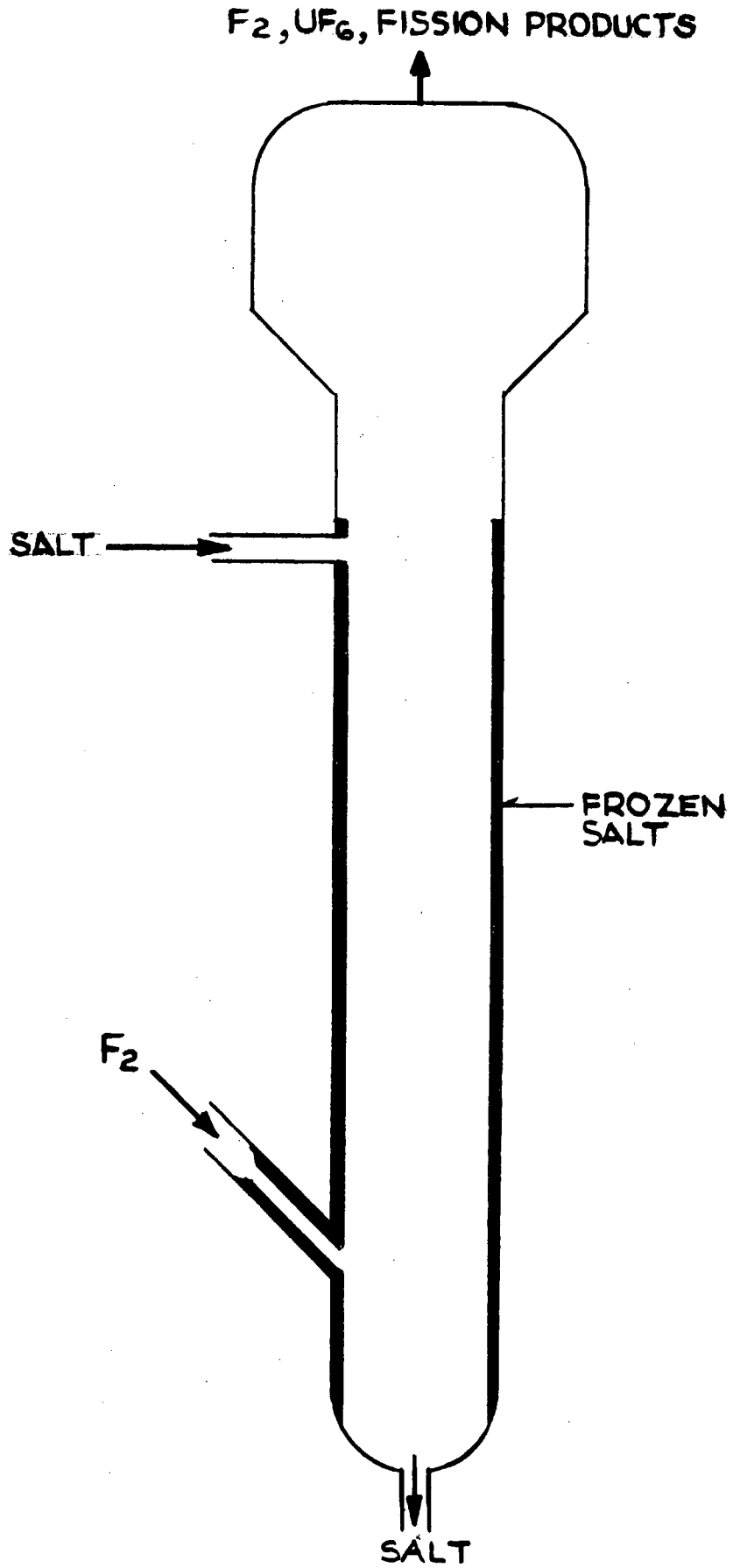

Figure 10.3. Frozen Wall Continuous Fluorination Reactor

10.4.1 Uranium Removal (Cont'd)

plug does not melt quickly. This should be taken into account in the vessel design.

In a demonstration of the operability of the frozen-wall fluorinator concept [8/], a frozen salt thickness of 0.3-0.8 in. was successfully maintained in a 5 in. diameter column flowing molten salt countercurrent to an inert gas. In this demonstration the temperature difference between the salt liquid and the metal wall ranges from 153 to 252 F.

The area just above the frozen salt is susceptible to corrosion. Care must be exercised that the fluorine gas leaving the salt solution does not entrain liquid. Entrained liquid contacting a cooler wall would freeze and protect the wall from further corrosion. If a buildup of solids occurs, the wall may be heated to melt the salt and the cycle repeated.

The protection of the fluorine inlet nozzle from corrosion is also a problem in this concept. A possible solution advanced by the ORNL consists of introducing the fluorine through a short section of pipe which intersects the fluorinator at a 45 degree angle (Figure 10.3). This method of gas introduction appears feasible, but it will not produce small diameter gas bubbles desired in a mass-transfer limited reaction system.

Experimental information must be obtained on a prototype system to allow a satisfactory design with a high degree of confidence. Such work is currently underway.

In the absence of molten salt, the fluorine gas bearing streams are contained satisfactorily by nickel or nickel-base alloys.

Volatile Fission Products

Some fluorides are volatile at the temperature used for fluorination of the molten salt. Table 10.5 lists the most probable volatile components of the molten salt stream along with their normal

8/ ORNL-4254, p. 252

Table 10.5

Volatile Fission Products From Molten Salt Fluorination

Compound	Boiling Point, ^{o}F, 1 atm
T_2	-423
Xe	-293
Kr	-243
CF_4	-198
TeF_6	- 38
IF_7	+ 39
HF	67
TF	67
MoF_6	95
BrF_5	106
UF_6	130
PuF_6	144
CrF_5	243
SbF_5	300
NbF_5	443
RuF_5	518

10.4.1 Uranium Removal (Cont'd)

boiling points. Fewer volatile fission products will be encountered in the fluorination of uranium resulting from the decay of protactinium (fluorinator N, Figure 10.1).

Reactor Design

1 - Salt Flow Rate

The breeding ratio and the removal time for protactinium sets the amount of molten salt to be treated in the fluorinator and the chemical processing plant. Based on a breeding ratio of 1.0626 and a protactinium removal time of about 10 days, 56.8 gallons/hour of salt from the reactor must be processed (no allowance for overdesign).

2 - UF_4 Removal

ORNL has specified about 99 percent of the UF_4 to be removed (and recovered) from the molten salt feed from the reactor. Uranium not removed in the fluorinator would require usage of more lithium metal reductant in the protactinium reductive-extraction column, and generally would lead to a higher processing cost due to the cost of the lithium-7 isotope. However, a trade-off study between the cost of lithium reductant and the cost of fluorination, including investment, should be done before finalizing the design criteria for uranium removal. Technically, a 99 percent uranium removal is feasible.

3 - Residence Time

The residence time of the molten salt in the reactor is dependent upon the rate of reaction and the amount of uranium removal desired. Since the reaction rate will almost certainly be mass-transfer limited, the rate of transfer of fluorine gas into the molten salt will set the time required for the desired reaction. The rate at which fluorine as introduced into the reactor will be controlled by the entrainment problem described below. Present indications suggest

10.4.1 Uranium Removal (Cont'd)

3 - Residence Time (Cont'd)

that a two-hour residence time is sufficient for a 99 percent uranium removal; however, no fluorination work has been done on the mass transfer to be realized in the ORNL frozen wall reactor concept. Therefore, a reliable reactor design rests on the availability of this informaton.

4 - Fluorine Gas Feed

Since corrosion in the salt-fluorine system is very severe, special precautions must be taken to prevent entrainment of salt droplets in the fluorine gas. A superficial gas velocity at STP of 1.4 ft/minute is claimed as the maximum allowable for no salt entrainment 9/. With such a low gas velocity, very little gas liquid mixing will occur; however, turbulence can be induced in the fluorinator using a smaller diameter section than the disengagement section.

The countercurrent flow of liquid and gas gives rise to the possibility of staging in the reactor. Because of the corrosion problem, staging devices are not possible but probably feasible. Therefore, staging can occur only because of the non-mixing tendency between the liquid and the slow rising gas bubbles.

The fluorine gas feed can be diluted with argon or helium, but no advantage for this dilution is obvious. A pure fluorine gas feed is recommended. Precautions must be taken to insure the fluorine feed to the system is essentially free of hydrogen fluoride (see below).

UF_6 Decontamination System

The NaF adsorption-desorption system for UF_6 decontamination has been operated successfully batchwise at the ORNL 10/ . The available information shows this system to be technically feasible and can operate on a continuous basis. Nickel or Nickel-based alloys

9/ ORNL-3791, p. 18
10/ ORNL-TM-2578

10.4.1 Uranium Removal (Cont'd)

are satisfactory for this service.

Adsorption Step

The UF_6-fluorine-fission product stream passes through an adsorption bed containing low surface area NaF that is maintained with a 750 F and a 220 F temperature zone. The gaseous stream passes through a 750 F zone first where the fission product fluorides of biobium, ruthenium and chromium are irreversibly adsorbed. At this temperature the UF_6 and other fission product fluorides are not adsorbed. PuF_6 in the gas stream, if any, will adsorb on the NaF at this temperature. Any hydrogen and/or tritium fluorides present in the fluorine gas stream leaving the reactor will form an NaF. 2HF compound at temperatures below 100 F and will cause plugging in the system. Precautions must be taken not to introduce any significant quantities of HF into the system from outside sources; e.g., in the fluorine feed [11], and to keep the adsorber temperature above 200 F.

The partially purified gas stream then passes through a low surface area NaF that is maintained at 220 F. At this temperature, the UF_6, neptunium, technetium, and part of the molybdenum fluoride will adsorb on the NaF. For the UF_6 the following occurs:

$$UF_{6(g)} + 2\ NaF_{(s)} \longrightarrow UF_6 \cdot 2\ NaF_{(s)} \qquad (15)$$

The iodine, bromine, tellurium, and part of the molybdenum fluorides will pass through the NaF bed and will be recycled with the fluorine gas. At 220 F, a small amount of UF_6 will also pass through the bed and be recycled with the fluorine gas.

Low surface area NaF (surface area of 0.07 m^2/g and void fraction of 0.28) is preferred to high surface area NaF (surface area of 1 m^2/g and a void fraction of 0.45) for the decontamination operation because of its higher capacity for UF_6. The maximum uranium loading was 0.56 lb UF_6/lb NaF for the low surface area variety versus 0.49 lb UF_6/lb NaF for the high surface area variety.

11/ ORNL-TM-907, page 36

10.4.1 Uranium Removal (Cont'd)

Care must be taken to insure at least 2 volume percent fluorine in the gas stream to the adsorber. At 750 F, about 840 ppm of uranium was retained on the NaF due to the following reaction when the fluorine concentration dropped below 2 volume percent 12/.

$$UF_{6(g)} + 2\ NaF_{(s)} \longrightarrow UF_5 \cdot NaF_{(s)} + 1/2\ F_{2(g)} \qquad (16)$$

The same precaution must be exercised for the UF_6 adsorption at 220 F. If the $UF_5 \cdot 2$ NaF product forms, it will not give up the uranium during the desorption cycle 13/.

A reliable adsorber design depends upon a thorough understanding of the behavior of fission product fluorides when in contact with NaF at both 750 F and 220 F. This understanding is quite limited at this time. Acceptable loadings must be determined as a function of both NaF properties and gas flow rate (residence time) through the bed. For this operation, gas flow distribution in the bed is very important. Extremely important in this analysis is the effect of other fission product fluorides (such as molybdenum fluoride) on the operating characteristics of the adsorber. Complete recovery of the uranium is important; therefore, the mechanism and reversibility of equations 15 and 16 must be thoroughly understood.

The number of cycles that an NaF bed can be reused after desorption is unknown. A continuous process requires that an automatic NaF loading and dumping method be developed. A proposed design is available 14/.

An accurate heat balance is required for the design of the adsorber. Fission product decay will release large quantities of heat; therefore, the input information required (such as fission product type, concentration, rate of decay) must be defined accurately.

12/ ORNL-4344, p 324
13/ ORNL-TM-907, p 12
14/ ORNL-3791, p 23

10.4.1 Uranium Removal (Cont'd)

Desorption of the UF_6 occurs by heating the NaF bed to 300 F and passing fluorine gas through the bed. The reverse of reaction 15 occurs. Some fission product fluorides; e.g., molybdenum fluoride, also desorbs and passes on with the UF_6-fluorine stream.

The rate of reaction for desorption and the equilibrium conditions for desorption are not known. The amount of fluorine gas required for desorption is not known, although the gas flow must contain at least 2 volume percent fluorine to prevent decomposition to the $UF_5 \cdot 2$ NaF complex (see above).

Cold Trap System

The UF_6 from desorption is collected in two cold traps connected in series. The primary trap is operated at -40 F and the backup trap is operated at -80 F. The principal design consideration is heat transfer rate and minimum holdup of UF_6. A specially designed trap for minimum UF_6 holdup has been designed and operated successfully in the ORNL pilot plant [15]. UF_6 removal is accomplished by heating the cold trap to 160 F to remove the UF_6 as a liquid for further processing. Decontamination factors of 8.6×10^8 gross gamma activity and 1.2×10^9 gross beta activity have been experimentally achieved [16].

The fluorine gas stream from the cold trap contains some UF_6, molybdenum fluoride, and other components and is recycled to the system.

Purge Gas System

A small amount of the recycle fluorine gas is purged to remove fission product fluorides that build up in the gas recycle. As a precaution, the exhaust gas is passed through a high surface area NaF adsorption bed held at ambient temperature to remove the last traces of UF_6 in the exhaust stream. The high surface area NaF is chosen for this fluorine gas cleanup because of the

15/ ORNL-3791, p 24
16/ ORNL-4344, p 8

10.4.1 Uranium Removal (Cont'd)

greater reactivity with UF_6 as compared to the low surface area material. Quantitative information such as rate of UF_6 adsorption, equilibrium constants, retention of UF_6 as a function of gas flow rates, is available.

10.4.2 Reductive Extraction

Reductive extraction between salt and bismuth is used in two places: the removal of protactinium from the salt stream, and the removal of rare earths from the salt stream. In both cases, the removal is accomplished by countercurrent contacting of salt (continuous phase) with bismuth (dispersed phase) containing 0.2 mole percent lithium reductant.

Distribution Coefficients

The equilibrium distribution coefficients applicable to the protactinium extraction column are shown in Table 10.6. The distribution coefficient for thorium is very near that for rare earth fission product fluoride. Thus, the removal of protactinium and associated compounds from the salt stream with a minimum amount of thorium loss should be easily accomplished.

The equilibrium distribution coefficients applicable to the rare earth reductive extraction column are shown in Table 10.7. Also shown in Table 10.7 are those compounds in the ORNL calculation program for which no data exist. In those cases, the data for neodymium are used in place of missing information. As shown in Table 10.7, the distribution coefficients are quite small and very near that of thorium; hence, the bismuth phase is saturated (or nearly so) with thorium metal.

Reaction Rates

Equation 2 shows the reaction that must occur and is typical for both the removal of the rare earth fluorides and protactinium fluoride from the salt stream. The reaction mechanism is

Table 10.6

Distribution Coefficient Between Bismuth Containing 0.2 Mole Percent Lithium and Salt (72-16-12 Mole Percent $LiF-BeF_2-ThF_4$) at 600°C

Fluoride	D a/	D/D_{Th}	Reference
Protactinium	221	3.1×10^3	ORNL - 4449, p 216
Uranium	2,430	3.4×10^4	ORNL - 4396, p 283
Zirconium	28,500	4.0×10^5	ORNL - 4396, p 281
Plutonium	202	2.8×10^3	ORNL - 4449, p 216
Californium	191	2.7×10^3	ORNL - 4449, p 215
Curium	26	3.6×10^2	ORNL - 4449, p 215
Americium	156	2.2×10^3	ORNL - 4449, p 215
Neptunium	693	9.7×10^3	ORNL - 4449, p 215
Thorium	0.0715	-	ORNL - 4396, p 283

a/ Defined as: $\frac{\text{Concentration of metal in Bismuth phase}}{\text{Concentration of metal fluoride in salt phase}}$

Table 10.7

Distribution Coefficient Between Bismuth Containing 0.2 Mole Percent Lithium and Salt ($72-16-12$ Mole Percent $LiF-BeF_2-ThF_4$) at 600°C

Fluoride	D a/	D/D_{Th}	Reference
Europium	0.42	5.9	ORNL - 4449, p 211
Samarium	0.03	0.42	ORNL - 4449, p 211
Promethium	0.02	0.28	ORNL - 4449, p 211
Lanthanum	0.025	0.35	ORNL - 4449, p 211
Strontium	0.009	0.013	ORNL - 4449, p 211
Neodymium	0.051	0.72	ORNL - 4396, p 191
Cerium	0.077	1.08	ORNL - 4396, p 191
Barium	0.045	0.63	ORNL - 4548, p 291
Thorium	0.0715	-	ORNL - 4396, p 283
Yttrium	Not Available		
Praseodynium	Not Available		

a/ Defined as: $\frac{\text{Concentration of metal in Bismuth phase}}{\text{Concentration of metal fluoride in salt phase}}$

10.4.2 Reductive Extraction (Cont'd)

understood; the protactinium fluoride must be reduced to protactinium by lithium metal in the salt-bismuth interface and then transferred to the bismuth phase. One expects that the reaction rate is rapid at 600 C. Similar reaction rates are expected for uranium, plutonium, zirconium and other rare earth fluorides.

Assuming the reaction is rapid, the mass transfer of the various constituents in the salt and bismuth phases becomes controlling. No data are available for these transfer rates. For mass transfer limiting reactions, the type and amount of mixing induced between the continuous salt phase and the dispersed bismuth phase are quite important. Since the distribution coefficients are so favorable for the protactinium extraction, a very low bismuth to salt flow ratio (approximately 0.074 gal bismuth/gal salt) can be calculated to effect the 93 percent protactinium removal efficiency contemplated by the ORNL. Because of this low ratio, the thorium losses in the system are quite low; but the problem of intimate contacting between liquid phases is increased. Methods exist for obtaining good contact between the liquid phases.

To effect the 54 and 42 percent removal rates for the divalent and trivalent rare earth fluorides, respectively, a bismuth to salt flow ratio of 13.5 gal/gal must be maintained. Again, intimate contacting of these liquid phases is important to transfer the necessary constituents across the boundary layers.

The equilibrium conditions for these reductive extractions are quite favorable.

Column Dynamics

Although several types of liquid-liquid contacting devices can be used, the ORNL concept uses various packings, such as Raschig rings, as the salt-bismuth contacting device.

10.4.2 Reductive Extraction (Cont'd)

Stage Efficiency

For the protactinium removal column, only six theoretical stages are calculated to accomplish the desired separation. Three theoretical stages are calculated for the rare earths removal column. No information is available on the efficiency of the contacting device (packing) so no height equivalent to an actual stage can be calculated. Such information is required.

Holdup and Flooding

Some experimental work has been done in a 2-in. diameter column packed with 1/4, 3/8, and 1/2 inch Raschig rings to measure holdup and flooding characteristics. Water (continuous phase) and mercury (dispersed phase) were used at room temperature to simulate salt (continuous phase) and bismuth (dispersed phase) at 600°C. A correlation has been developed that relates the data on holdup and flooding in terms of a constant superficial slip velocity which is a function of packing size only. An expression was developed for salt-bismuth systems based on the mercury-water data. Verification of this correlation for the salt-bismuth system still was done.

Pressure Drop

Some experimental measurements have been made on mercury-water systems in packed columns. Thus far, no simple relation has been found for correlating the pressure drop data. No data are available on the salt-bismuth system.

Materials of Construction

For this service, both molybdenum and graphite should be satisfactory.

10.4.2 Reductive Extraction (Cont'd)

The solubilities or uranium, plutonium, and zirconium in bismuth have been determined. Also known are the effects of other compounds (e.g., rare earths) on the mutual solubility of these metals. It is very important to know the quantity of bismuth in the molten salt that goes back to the reactor.

10.4.3 Rare Earth Transfer

In the rare earth transfer process, the rare earths are removed from the bismuth stream (dispersed phase) by extraction into lithium chloride (continuous phase) at 640°C. In this operation, the rare earths in the bismuth stream are effectively converted to the corresponding rare earth chlorides in the lithium chloride stream. Then the trivalent and divalent rare earth chlorides are transferred back into separate bismuth streams containing high concentration (0.05 and 0.5 mole fraction, respectively) of lithium reductant.

Distribution Coefficients

The equilibrium distribution coefficients applicable to this rare earth transfer process are shown in Table 10.8 for a bismuth stream containing 0.2 mole percent lithium reductant. There is an excellent separation between the rare earths and thorium, uranium, protactinium, etc. Thus, the rare earths can be removed from the bismuth stream with essentially no loss of thorium from the bismuth stream. After the rare earth chlorides are in the lithium chloride stream, they are next subjected to a reductive extraction with separate bismuth streams for the trivalent rare earth chlorides (0.05 mole fraction lithium reductant) and the divalent rare earth chlorides (0.5 mole fraction lithium reductant). The distribution coefficients between the bismuth and lithium chloride phases become slightly more favorable at higher lithium reductant concentration [17/].

17/ ORNL Information Meeting - 4/27 - 5/1/70

Table 10.8

Distribution Coefficients Between Bismuth Containing 0.2 Mole Percent Lithium and Lithium Chloride at 640°C

Element	D a/	Reference
Barium	2.03×10^{-4}	ORNL - 4548, p 291
Cesium	8.6×10^{-5}	ORNL - 4548, p 172
Cerium	4.3	ORNL - 4548, p 171
Neodymium	3.5	ORNL - 4548, p 291
b/ Strontium	7.6×10^{-5}	ORNL - 4548, p 172
Lanthanum	0.76	ORNL - 4548, p 291
Samarium	3.1×10^{-3}	ORNL - 4548, p 291
c/ Europium	8.1×10^{-4}	ORNL - 4548, p 291
Curium	25	ORNL - August 1970
Americium	117	ORNL - August 1970
Neptunium	256	ORNL - August 1970
Californium	1.2	ORNL - August 1970
Thorium	3.7×10^{4}	ORNL - 4348, p 291
Plutonium	1.7×10^{2}	ORNL - August 1970
Uranium	1.5×10^{3}	ORNL - 4548, p 291
Protactinium	1.1×10^{7}	ORNL - 4548, p 291

a/ Defined as: $\frac{\text{Concentration of metal in bismuth phase}}{\text{Concentration of metal chloride in LiCl phase}}$

b/ At 650°C

c/ At 630°C

10.4.3 Rare Earth Transfer (Cont'd)

Reaction Rates

Equations 6 and 7 show the reactions that must occur for the removal of the rare earths from the bismuth stream. The reverse of these reactions must occur when the trivalent and divalent rare earth chlorides are reductively extracted into separate bismuth streams.

The reaction mechanism is the same as discussed under the protactinium reductive extraction section. One expects rapid reaction at 640°C. Data on the mass transfer effects are necessary for these reductive extraction columns.

The rare earth transfer columns operate with a bismuth-to-lithium chloride flow ratio of 0.37; the trivalent rare earth extractor operates with a ratio of 0.24 gpm bismuth/gpm lithium chloride; and the divalent rare earth extractor operates with a ratio of 0.00059 gpm bismuth/gpm lithium chloride. Thus, each extractor presents problems in the liquid-liquid contacting required for good mass transfer. This can be alleviated by using mixer-settlers, or by using recycle solvent systems on the packed towers.

Column Dynamics

Although not specifically specified in the ORNL concept, the rare earth transfer extractor (3 theoretical stages) will probably be a packed column, while the trivalent extractor (1 theoretical stage) and the divalent extractor (2 theoretical stages) could be conventional mixer-settlers.

Stage Efficiencies

Very little is known about stage efficiencies, either for packed towers, or mixer-settlers. This information needs to be developed.

Holdup and Flooding

Data are available for countercurrent contacting of lithium chloride and bismuth.

10.4.3 Rare Earth Transfer (Cont'd)

Pressure Drop

Data are available for countercurrent contacting of lithium chloride and bismuth.

Materials of Construction

The rare earth transfer extractor can be made out of either molybdenum or graphite. Graphite can probably be used for both the trivalent and divalent rare earth extractors when there is a high lithium concentration in the bismuth phase.

Solubilities

The limits of mutual solubility for the rare earth chlorides in lithium chloride are known.

Contamination of Lithium Chloride

There is a possibility that the lithium chloride stream can become contaminated with fluorides such as lithium fluoride. Data have been obtained on key components showing the effect of distribution coefficients as a function of LiF/LiCl concentration [18]. Up to about 5 mole percent LiF in LiCl, no serious reduction in distribution ratios occurs.

If such contamination does occur, the chloride can be removed by treatment with BF_3,

$$LiCl_{(1)} + BF_{3(g)} \longrightarrow 3\ LiF_{(1)} + BCl_{3(g)} \qquad (17)$$

The effectiveness of this method at 650°C has been shown [19], but reaction rate and equilibrium constants still must be determined. It is not known whether mass transfer effects will hinder the reaction.

10.4.4 Oxidation

The bismuth stream containing protactinium and the divalent rare earths, and the one containing the trivalent rare earths are oxidized with HF to transfer these elements to a salt stream as

18/ ORNL-4548, page 291

19/ ORNL - July 1970 Monthly Progress Report

10.4.4 Oxidation (Cont'd)

fluorides (equation 10). Either a countercurrent tower reactor or a continuous stirred tank reactor could be used.

This reaction required intimate contacting between two immiscible liquid phases (bismuth and salt) and a gas phase (hydrogen fluoride). The reaction mechanism is understood, and there are both kinetic and equilibrium reaction data. The role of mass transfer needs to be better understood. This factor must be researched before a reliable reactor design can be made.

10.4.5 Protactinium Decay Tank

The protactinium fluoride is in the salt phase; therefore, nickel or nickel based alloys can be used for the construction material. Protactinium decays to uranium-233 with a half life of about 28 days. No special problems are foreseen with this vessel, although a reliable decay heat removal system must be designed to control the temperature of the vessel.

10.4.6 Fuel Salt Reconstitution

The purified fuel salt must undergo several operations prior to its return to the nuclear reactor.

1 - Remove the corrosion products that formed in the process; NiF_2, FeF_2
2 - Remove any entrained bismuth
3 - Remove any entrained lithium chloride
4 - Remove oxide impurities
5 - Add the UF_6 and reduce it to UF_4
6 - Adjust the UF_4/UF_3 ratio
7 - Filtration

Quite possibly, one reactor could do several jobs. For example, a tower reactor packed with nickel gauze and treated with hydrogen could:

10.4.6 Fuel Salt Reconstitution (Cont'd)

1 - Remove the corrosion products

$$FeF_{2(l)} + H_{2(g)} \longrightarrow Fe_{(s)} + 2\ HF_{(g)} \qquad (18)$$

2 - Remove bismuth by forming a nickel-bismuth intermetallic

3 - Reduce the UF_6 to UF_4 [20/]

$$UF_{6(s)} + H_{2(g)} \longrightarrow UF_{4(s)} + 2HF_{(g)} \qquad (3)$$

Experimental evidence is available which indicates that reactions 3 and 18 will work; and details about mass transfer, reaction kinetics, and equilibrium considerations are available for all except UF_6. The bismuth should dissolve nickel; therefore, it is reasonable to expect the bismuth will be removed on the nickel gauze packing.

The oxide impurities can be removed by treatment with hydrogen flouride.

$$O^{-2}_{(s)} + 2\ HF \longrightarrow H_2O_{(g)} + 2\ F^-_{(s)} \qquad (19)$$

This method has been used batchwise on the laboratory scale many times, but the reaction kinetics and mass transfer characteristics must be determined prior to a reactor design.

The control of the UF_4/UF_3 ratio is done as follows:

$$UF_{4(s)} + 1/2\ H_{2(g)} \longrightarrow UF_{3(s)} + HF_{(g)} \qquad (4)$$

The control to be exercised is for a ratio between 10^3 to 10^4. Much is known about the reaction kinetics.

Chloride can be removed from the salt as follows:

$$2\ Cl^-_{(2)} + F_{2(g)} \longrightarrow 2\ F^-_{(s)} + Cl_{2(g)} \qquad (20)$$

The reaction is rapid. Probably, the chloride concentration can be removed in the fluorinator during normal processing of the fuel salt.

20/ ORNL-TM-1051

10.4.6 Fuel Salt Reconstruction (Cont'd)

The final step is filtration to remove solids from the molten salt. A filter was designed and built to operate at 1200 F [21/]. The operation was successful. This model can be used as a guide for designing a commercial installation.

10.4.7 Other Considerations

The success of the chemical processing depends upon being able to remotely control th: many variables present in this complex arrangement. Flow and level can be most easily controlled by using proportioning pumps with variable speed or piston stroke setting. Fabrication of the piston and cylinder elements from either molybdenum or graphite should be relatively simple.

Process measurements are essential to good, reliable operations. These values should be monitored continuously.

1 - UF_4/UF_3 ratio
2 - Total U content in salt to reactor
3 - Detection for Bi in salt
4 - Detection for LiCl in salt
5 - Detection for LiF in LiCl
6 - Ratio of $LiF/BeF_2/ThF_4$
7 - Salt levels in all vessels
8 - Temperatures
9 - UF_6 detection for breakthrough in NaF beds
10 - HF/H_2 ratios in oxidations
11 - Oxide concentration in salt

10.4.8 Options

Several options exist for how the chemical plant can be operated.

1 - The chemical plant can be entirely shut down with the reactor operating as a converter. In this case, the equipment to remove oxides, corrosion products and adjust the UF_4/UF_3 ratio must be available.

21/ ORNL-TM-2478

10.4.8 Options (Cont'd)

2 - Processing can be limited to the fluorination portion of the chemical plant. This allows some gain in conversion ratio by simply discarding a predetermined amount of uranium-free salt from the system.

3 - The fluorination and protactinium extraction sections, along with the protactinium decay tank, can operate as a unit, again discarding salt due to rare earth fission product buildup.

4 - The plant can operate as an entire unit - obviously, the most desirable alternative.

5 - In case of probable engineering difficulties, the plant can be operated batchwise with only a small penalty in salt inventory (about 60 ft^3 for 1 batch every 8 hours).

11.0 PURGE-GAS SYSTEM

In the Reference Concept the purge-gas system consists of a bubble generator and bubble separator located in a bypass around each fuel salt circulating pump. The purpose of the purge-gas system is to reduce the concentration of undesirable contaminants in the circulating fuel salt. Contaminants removed include gaseous and gas-borne fission products, tritium, water, oxygen, hydrocarbons, etc. The Reference Concept purge-gas system is designed primarily to reduce the ^{135}Xe poison fraction to a target value of 0.5 percent. Current thinking, however, is that emphasis should probably be on removal of tritium. The MSBR Reference Concept is based on an average circulating bubble faction in the fuel salt loop of 0.2 percent. Ten percent of the discharge flow of each pump passes through a bypass containing a bubble separator which is expected to strip essentially all the circulating bubbles from the salt. The flow then passes through a bubble generator which puts clean helium bubbles back into the salt.

11.1 Loop Experiments

The performance of the Reference Concept is based on calculations in which the bubbles were assumed to be 0.02 in. in diameter. Recent ORNL experiments[1/] with glycerin-water mixtures suggest the pumps will chop these bubbles into much smaller ones, in the range 0.001-0.003 in. diameter. Assuming no change in void fraction or bubble residence time, the smaller bubbles will provide a much greater surface area for transfer of xenon and, hence, the xenon concentration in the salt should be much lower than with the larger bubbles. This would appear to improve the chances of attaining a satisfactory breeding ratio without requiring sealed graphite. The smaller bubbles, however, introduce two new uncertainties into the calculated results: First, they may be much more difficult to remove from the salt and will, therefore, have a longer residence time in the salt; second, the mass transfer coefficient of xenon will change.

1/ Molten-Salt Reactor Program Semiannual Information Meeting, April 20, 1971. Presentation by C H Gabbard.

11.1 Loop Experiments (Cont'd)

The ORNL experiments with the glycerin-water mixture indicate that a bubble entrainment problem may exist. When the circulating pump is turned off and the liquid stops flowing, the smaller bubbles are observed to remain fixed in the salt rather than coalesce and rise as the larger bubbles. Of course, at high void fractions they will undoubtedly coalesce and rise, but it is desirable to keep the salt void fraction in the core down to 2 percent or less (ORNL prefers about 1 percent).

As yet, it is not clear how the smaller bubbles would be removed. The swirl separator proposed by ORNL, or a spray chamber, might be made to work; but as yet, neither of these devices has received sufficient study to permit conclusive judgement regarding their technical feasibility.

Experiments to determine the mass transfer coefficient of xenon to the larger bubbles suggests a value somewhat lower than assumed by ORNL. The consequence of reducing bubble size on the mass transfer coefficient is unknown as yet. Diffusion theory calculations suggests, however, it will increase dramatically. This increase is suggested because there are about 1000 times more of the smaller bubbles and, consequently, their average spacing is about one-tenth of the larger ones. This means that xenon atoms must diffuse only one-tenth as far through the salt to reach a bubble as in the case of the larger bubbles. An increase in mass transfer coefficient, therefore, seems entirely reasonable.

Most of the basis for optimism in removing ^{135}Xe from the salt is based on MSRE experience.

11.2 MSRE Experience

MSRE operated with a poison fraction between 0.2-0.3 percent (compared with the target of 0.5 percent for the MSBR). MSRE graphite was unsealed and the mechanism for purging xenon from the salt functioned more by accident than by design. The systems for

11.2 MSRE Experience (Cont'd)

purging Xe in the MSRE consisted of spraying a fraction of the recirculating fuel salt through the cover gas in the pump bowl using a sparging ring. The separating efficiency for Xe was of the order of 8-12 percent. It was found that the spray carried a large number of bubbles into the salt in the pump bowl and that on increasing the pump speed above a critical level, bubbles were carried from the pump bowl into the pump suction and circulated around the primary fuel salt loop. As a result, the Xe poison fraction was reduced to a lower level than anticipated. It was also found that xenon removal with helium purge gas at low void fractions was substantially better than that with argon, although at a larger void fractions there was essentially no difference between the two. The difference in behavior seems to be explainable by the substantially higher solubility of helium in the fuel salt.

11.3 MSBR Reference Concept

It is recognized that the increase in pressure from pump suction to pump discharge is sufficient to dissolve all the circulating helium bubbles if equilibrium is reached. There is considerable uncertainty as to appropriate mass transfer coefficients and the validity of various models for bubble transport and mass transfer. Hence, it is not clear whether the helium bubbles will completely disappear in the short time they are exposed to high pressures. However, part of the helium will surely dissolve and some of the bubbles (presumably the smallest) will disappear. Should all or most of the bubbles disappear, they would be expected to reappear by renucleation somewhere downstream where the lower pressure (and temperature) assure that saturation would again be reached. It is quite possible that the size range of bubbles produced by renucleation will not match that of those originally injected. However, the expected presence of a large number of nucleation

11.3 MSBR Reference Concept (Cont'd)

sites (e g, as noble metal particulates) would probably assure dispersal as very small bubbles. A major question, of course, is why go to the trouble of designing a sophisticated device for generating bubbles in the desired size range if there is a good probability that the bubbles so formed will disappear and be regenerated in a size distribution over which one has no control, and particularly if the self-generated size distribution pattern may well be near optimum. Further investigation may show that no bubble generator external to the circulating pump is required. Of course some sort of bubble separator would still be needed.

The other major question concerning the purge gas system is whether the circulating bubble concept is the best approach to Xenon removal. Figure 11.1 indicates that, with uncoated graphite and for the model assumed for the calculation, a circulating bubble volume fraction of about 1 percent averaged for the fuel loop would be needed to achieve the target ^{135}Xe poison fraction of 0.5 percent. Because of pressure variation around the loop, the corresponding void fraction in the core would necessarily be several percent and probably not tolerable. Figure 11.1 also shows that there is no significant gain in ^{135}Xe poison fraction by increasing the fraction of bubbles stripped per cycle beyond about 10 percent. The conclusion to be drawn is that sealing of the graphite is essential to achieve 0.5 percent xenon poison fraction if the bubbles are 0.02 percent diameter and the assumed mass transfer coefficient (2 ft/hr) is correct. If a higher value can be justified on the basis of experiments being undertaken, the effectiveness of the circulating bubbles may be enhanced.

A basic limitation to the effectiveness of xenon removal, possible with circulating bubbles, is the interface area between gas and molten salt. This can only be increased by increasing the void fraction or decreasing the bubble diameter, both of which have practical limits. Considering the relative volumes, it should be obvious that a much greater interface area could be achieved

ORNL-DWG 68-13037R

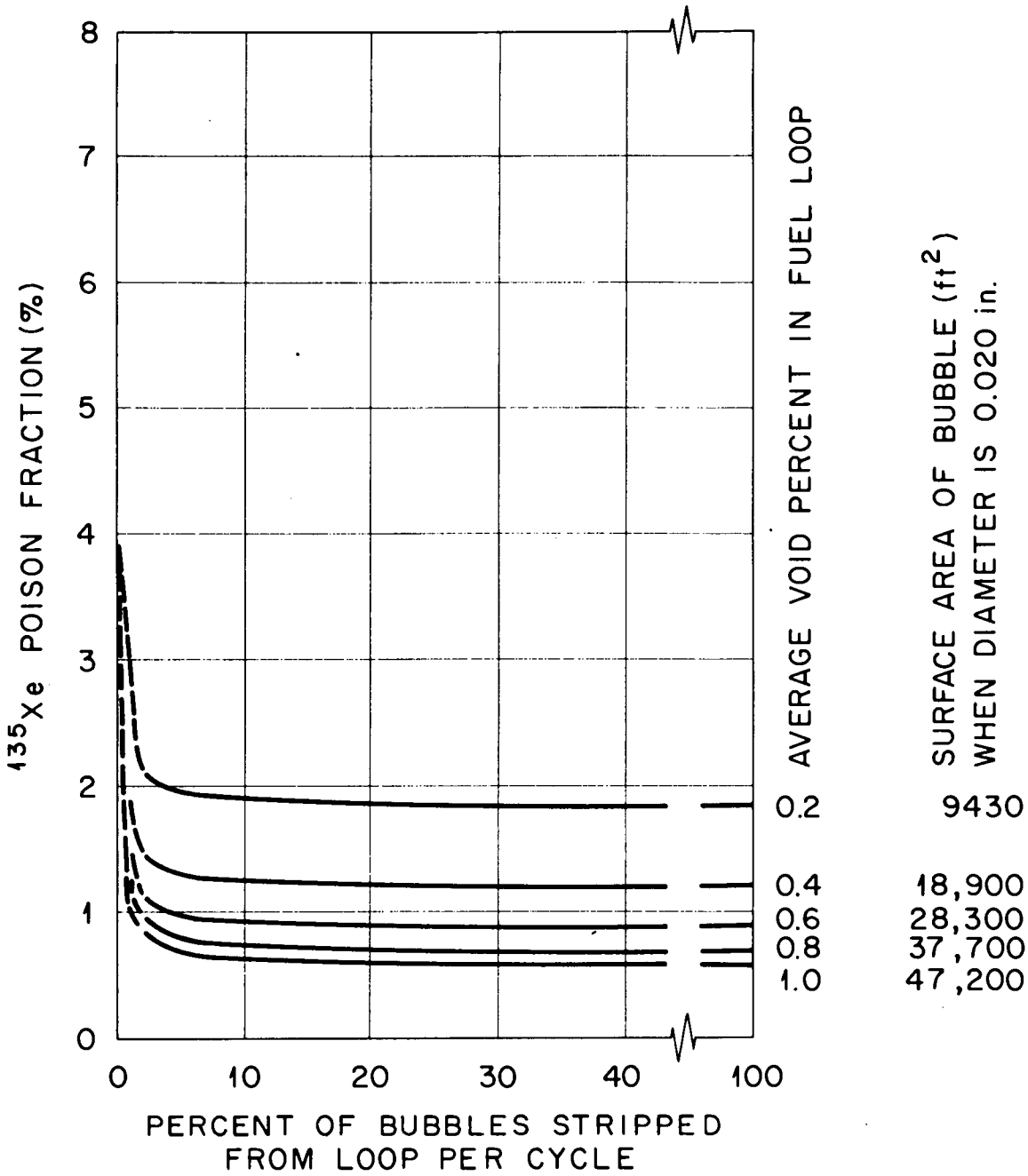

Figure 11.1 Xenon-135 Poison Fraction as a Function of Per Cent Bubbles Stripped from Fuel Loop Per Cycle.

Parameters:

1000 MW(e)
Unsealed graphite
Bubble diameter = 0.020 in.
Bubble mass transfer coefficient - 2.0 ft/hr
Graphite permeability to He at room temperature $\approx 10^{-5}$ cm^2/sec
Graphite void available to xenon = 10%

11.3 MSBR Reference Concept (Cont'd)

by breaking the liquid into drops as in a spray chamber than by breaking the limited volume of gas into bubbles. Factors other than area, such as time of contact and purge gas rate and concentration, must be taken into consideration. The original scheme used in the MSRE purge was essentially a spray chamber. ORNL advised that they considered a spray chamber for MSBR but rejected it on the grounds of excessive holdup of fuel salt. A fresh look at an alternate concept seems warranted, partly because of potentially more effective xenon removal and perhaps eliminating any need for sealing graphite, and also because of potentially more effective removal of tritium than can be achieved with circulating bubbles.

Considerably more work will be needed before the effect of helium solubility on xenon removal by circulating bubbles can be fully evaluated.

12.0 OFF-GAS SYSTEM

The function of the off-gas system is to remove contaminants from the purge gas. As shown in Figure 3.16, the purge gas leaves the drain tank and enters a particle trap (if required) to remove entrained salt and noble metals. The gas stream then passes to the 47-hour hold-up charcoal adsorbing bed which attenuates the ^{135}Xe concentration in helium to about 3 percent of its inlet concentration. Although the helium is not physically held up, its outlet ^{135}Xe concentration is such that it appears to have been held up 47 hours. The 11 scfm gas stream then splits: 9 scfm passes through a chemical trap where any oil or moisture is removed and radiation levels are monitored and 2 scfm passes through the 90 day holdup charcoal bed where longer lived isotopes (^{131m}Xe, ^{133}Xe, ^{135}Xe, ^{85m}Kr and ^{88}Kr) are eventually adsorbed and decay. The 2 scfm stream is then heated to about 1500 F and passed over CuO beds to oxidize tritium to T_2O which is then trapped in a cleanup system consisting of more charcoal beds, but these are refrigerated to near $0^{o}F$. (The gas stream is cooled before entering the refrigerated charcoal beds.) This highly decontaminated gas is then circulated through a purge gland on the salt pump shaft into the pump bowls. This inward flow prevents leakage of contaminated gas and also cools the bearings. It then provides the cover gas in the pump bowl and reactor vessel before it mixes with the gas bubbles extracted from the salt and repeats the cycle.

12.1 47-Hour Charcoal Beds

The 47-hour charcoal beds consist of a total of about 27 miles of 2 in. OD charcoal-filled piping submerged in water. This network of piping is arranged in four parallel banks. This arrangement provides reliability of ^{135}Xe disposal capability through redundancy of adsorption capability. Each bank consists of 60 units of vertical hairpin piping sections. Each pool is about 65 ft long by 6 ft wide by 25 ft deep. The decay heat is dissipated by boiling water at 230 F at about 6 psig. The stream is condensed and returned to the pool.

12.1 47-Hour Charcoal Beds (Cont'd)

The heat is rejected to another circulating water loop and on to the atmosphere. There are three barriers protecting against the release of fission gases: The charcoal-filled piping; the condenser tubes together with the pool closure; and the cooling circuit closure.

Although three barriers against fission gas release is probably sufficient, it appears that more but smaller charcoal banks are warranted. In this way leaks in hairpin piping could be located more readily and isolated to a smaller portion of the system. This would then leave a larger portion of the system operative.

Another objection is the steam pressure. The only pressure retainer indicated by ORNL is a concrete slab. Such a slab would have to be 6 ft thick. If this design were adopted, gasket problems may occur.

A final objection relates to the philosophy of fission gas disposal. On one extreme the philosophy might be to get this gas adsorbed into charcoal, i e, into solid form, as quickly as possible to minimize the volume of gaseous radioactivity in the system. This philosophy suggests piping the gases directly from the bubble separator to the charcoal beds by-passing the drain tank. This would eliminate having the drain tank contain about 250×10^6 curies of gasious activity and the consequences of losing control of this gas. This approach, however, would put a much greater heat load on the 47 hour charcoal beds and probably add substantially to its cost and complexity, but it might be more attractive from the standpoint of plant licensing and safety.

On the opposite extreme it is conceivable that fission gases can be disposed of by more simple, reliable, and economic apparatus. Such apparatus would consist of one

12.1 47-Hour Charcoal Beds (Cont'd)

or several tanks having a total volume of about twice that of the drain tank instead of the 47-hour charcoal beds. Fission product gases would enter the tank at the same rate they enter the drain tank. The concentration of fission gases in helium would stabilize when the rate of xenon decay from the gas equals the rate at which it enters the gas bubbles. If the tanks contain about 6000 ft^3 of gas, the equilibrum concentration would be low enough that the gas could be recycled directly to the bubble generators. Xenon removal would be accomplished without requiring cleanup via charcoal adsorption and the xenon poison fraction would remain at about 0.5 percent. The disadvantage is that an equilibrum inventory of about 650 x 10^6 curies of fission gases reside in tanks with the potential for release.

It appears that either approach can be made to work and can be justified. The ORNL concept, however, combines the disadvantage of having a large inventory of unadsorbed fission gases together with the complexity, expense, and nuisance of charcoal beds.

12.2 90-Day Holdup Charcoal Beds

The 90-day beds are very similar to the 47-hour beds in design and construction. Because less activity enters these beds, they operate at a lower temperature. No steam will be produced; instead the decay heat is dissipated by circulating water through exchangers which transfer heat to the atmosphere. The 90-day holdup beds are much smaller. They consist of about 4-1/2 miles of about 3 in. OD piping in two parallel banks, each in a pool about 60 ft long, 25 ft wide, and 25 ft deep. Each bank consists of 20 parallel units of hairpin piping sections.

12.2 90-Day Holdup Charcoal Beds (Cont'd)

Aside from the comments on pressure retention, all criticisms of the 47-hour holdup beds apply equally to the 90-day beds. However, a volumetric decay tank cannot be considered in lieu of the 90-day beds for two reasons: First, the half-lives of the principal contaminants removed by the 90-day beds are so large that the concentration of these isotopes would build up to undesirably high concentrations unless the decay volume was extremely large. Second, the activity must be made low enough so that helium leakage into accessible areas (from motor seals, etc) does not cause a health hazard.

12.3 Tritium Removal

Upon leaving the 90-day charcoal beds, the gas stream is contacted with CuO at 1500 F to oxidize tritium so it can be subsequently trapped in refrigerated charcoal. Because of the relatively low pipe wall temperature in the off-gas system, tritium leakage through the walls into the pools should be insignificant. It would appear, however, that tritium removal from the helium would be more efficient if the hot 11 scfm stream were contacted with CuO prior to entering the 47-hour charcoal beds. This would have the benefit that any tritium returned to the primary system in the 9 scfm stream would do so as T_2O, a form which is not as likely to dissociate and leak through the Hastelloy N. To prevent all hydrocarbons (from oil leaks, graphite binder, and perhaps other sources) from being oxidized to water and returned to the primary loop, it is desirable (perhaps necessary) to have a full flow, tritium trap.

13.0 MAINTENANCE AND REPAIR

The successful maintenance and repair of MSRE only partially demonstrates the technical feasibility of maintaining and repairing an MSBR. The equipment size and radioactivity level expected in MSBR's will be much greater than presently experienced. Maintenance and repair methods and procedures must be taken into account during the plant design.

The ORNL philosophy toward repair is to first protect against failure by good quality control and thorough inspections and second, to provide for removal and replacement of failed components. Failed components would be transferred to a hot cell for inspection and repair if feasible.

As for MSRE, MSBR systems will probably be laid out so that all components of contaminated systems are accessible from the cell top. In MSRE all supports, electrical instrumentation and connections, pipe connections, etc, are accessible and visible from the top through a maintenance shield. This design philosophy will probably be applied in MSBR designs.

To provide accessibility to all contaminated systems it is necessary for the biological shielding to be built in removable segments. Each segment will be interchangeable with a portable maintenance shield. This maintenance shield affords adequate shielding soon after the reactor is shut down. It contains windows and ports through which long handled tools can be manipulated. It may also contain provisions for manipulators, hoists, electrical power outlets, etc.

The hoists used for removing the biological shield segments and inserting the maintenance shield must be designed for fail-safe operation because the high bay area must be evacuated during the shield replacement procedure. Thus, the probability of removing a section of biological shielding and not being able to replace it or to install the maintenance shield must be very small. This criterion is not new to the nuclear industry and satisfactory equipment, methods, and procedures are well within present technology.

There are two methods of maintenance which are of importance to the technical feasibility of MSBR's: Semi-direct and remote maintenance.

13.1 Semi-Direct

Nearly all of the equipment in the process plant and the off-gas system will become highly radioactive. ORNL indicates these activity levels may be ten times greater than experience in MSRE. Nevertheless, it is believed that MSRE experience is directly applicable to these systems. Since the components in these systems are small, replacement using the semi-direct methods demonstrated by MSRE appears entirely feasible. The high radiation levels require additional shielding which, in turn, influences system arrangement and component design.

13.2 Remote

As yet, the nuclear industry has not acquired maintenance experience which demonstrates capability to service major MSR components. Even several weeks after shutdown the radiation levels and heat production rates near major components will be far greater than that experienced as yet. There is essentially no experience in remote cutting and welding of pipes and replacement of large components in such environments. Although replacement of large MSR components may never be necessary in practice, the capability to do so must exist. Maintenance procedures must be analyzed in detail and the system design must be compatible with those procedures. Delineation of the tools, casks and any other conceivable equipment needed together with its interfacing is also necessary.

In the ORNL Reference Design it was assumed that many permanent items designed to last for the plant life would require no maintenance. The reactor vessel, pump housings, heat exchange shells, drain tank, thermal shielding and insulation, and primary piping, were among those items. No provisions for their maintenance or replacement were made in the design. However, pump rotors, heat exchange tube bundles, bubble injectors and removers, etc, and the graphite core assembly require detailed replacement procedures. Of these, the graphite received, by far, the most consideration.

13.3 Core Replacement

The reactor will be shut down about 10 days prior to core removal. At this time the heat production rate due to fission gases inside the graphite and noble metals on the graphite surface was estimated by ORNL to be about 0.25 MWt. This estimate is based on analyses of fission gas diffusion into graphite, 10 percent of the noble metals produced sticking to the graphite, and equilibrium operation prior to shutdown. This heat production rate in drained, uncooled graphite will give rise to a temperature rise rate of about 5 F/hr. Hence, it appears that the removal process can take many hours and not require a cooling system. The radiation level outside the cask containing the graphite assembly is estimated to be 1000 R/hr; the level at the outside wall of the reactor building is reported to be less than ~100 mR/hr.

In the ORNL Reference Design a maintenance containment vessel is permanently installed over the reactor cell. The purpose of this vessel is to contain airborne contaminants. It accomplishes this by providing an adjustable, cylindrical sleeve which meshes with the cask and forms a seal. It also contains high capacity fans which discharge into the off-gas system to assure inward movement of air.

The cask is an integral part of a polar crane shown in Figure 3.23. It contains four lifting hoists which lift the graphite matrix together with the top and bottom heads into the cask. It also has a two-leaf gate valve which seals the bottom of the cask.

The procedure proposed by ORNL for graphite removal is as follows:

1 - The top of the maintenance containment vessel is removed. This exposes the reactor shield plugs.

2 - The control rod drive mechanism is disconnected at the top size of the shield plug and drawn into the cask, sealed, and stored. This involves direct and semi-remote operations.

3 - The control rod opening is closed with a blind flange, a remote operation.

13.3 Core Replacement (Cont'd)

4 - The top plug is removed (Figure 3.23) and the head holddown bolts are removed.

5 - The auxiliary hoist is engaged to the lower shield plug and hoist is initiated to assure clearance.

6 - The maintenance crew vacates the high bay area.

7 - The lower shield plug is removed and the maintenance shield is positioned in its place. The crew returns to the high bay area.

8 - Working thru the maintenance shield with semi-remote methods, the lifting rod ports are opened and the eight lifting rods engaged (see Figures 3.13, 5.1 and 5.2).

9 - The crew again vacates the area, and the maintenance shield is set aside.

10 - The core cask is centered over the reactor and sealed to the maintenance vessel.

11 - The four cask hoists are connected to the lifting rods and the entire assembly - the bottom dish and reflector, the core assembly, together with the top head - is lifted into the cask.

12 - The cask bottom is closed and the seal with the maintenance containment released.

13 - The spent graphite is then centered over the spent core storage cell. The cask is sealed with a transition piece.

14 - The cask is opened and the assembly lowered into the cell. The assembly is suspended by its top flange and the lifting rods.

15 - The shield plug is placed over the spent core and the maintenance shield placed over the reactor vessel.

16 - After the cask is decontaminated, the work crew can return to the high bay area.

13.3 Core Replacement (Cont'd)

17 - The vessel is inspected optically and ultrasonically.

18 - Again the high bay area is vacated and the maintenance shield removed.

19 - A new core assembly previously placed into the cask is positioned over the vessel and sealed to the maintenance closure.

20 - The new assembly is lowered into the vessel. The 2-in. annulus provides clearance and no rotational orientation is required.

21 - The cask is removed and the maintenance shield replaced over the vessel.

22 - The maintenance crew returns, disengages the lifting rods, and reseals the lifting rod ports.

23 - The area is again vacated, the maintenance shield removed and the lower shield plug inserted.

24 - The crew returns to replace the bolts to the top head flange.

25 - The top shield plug is replaced.

26 - Control rod drives reinstalled.

27 - The system is then leak tested and prepared for operation.

Much of this procedure can be made fail-safe in that backup procedures can be initiated to make the high bay area accessible. As long as it can be made accessible, personnel can enter and fix machinery so that the replacement procedure can resume. In a few steps, however, it appears that a single failure could paralyze the operation, perhaps for a prolonged period. Beginning with step 10 when the cask is first positioned over the vessel, until step 16 when the cask is decontaminated, any failure which stops the operation would be very serious. If the initial radiation level were 1000 R/hr when the assembly was lifted into the cask ten days after shutdown, it would be about 160 R/hr 100 days later and about 50 R/hr about 1000 days later. Thus, it appears that the plant could be out of operation

13.3 Core Replacement (Cont'd)

for a long time. The consequences would not be nearly so serious if the failure occurred after step 14 when the assembly is lowered into the spent core cell.

There are two obvious ways of approaching the problem of replacing spent graphite: Design the cask machinery with sufficient reliability that the risk of failure is acceptable; or change graphite in small quantities so that adequate shielding can be supplied and the machinery serviced at any time during the operation.

The first approach has the disadvantage that it is costly and it can never be known if it is sufficiently reliable. The second approach has the opposite features of the first. In addition to the possibility of being able to rearrange graphite for more uniform exposure, this approach offers the potential of portability. It may be possible for a single graphite handling machine to service many MSR's at cost savings to each.

The ORNL concept of the core cask is not described sufficiently to assess its technical feasibility. A few pertinent characteristics, however, are apparent: Its shell is only 2 in. thick and, therefore, offers little value as a shield; it appears that the lifting mechanisms (motors, etc) are housed within the cask (presumably to eliminate penetrations and prevent release of airborne contaminants); and, four hoists are proposed. Because additional detail is lacking, the following critique reflects only a philosophical approach to the conceptual design.

If the cask should become paralyzed with the spent core, and if the radiation level at the cask surface is about 1000 R/hr, the cask could, in principle, still be serviced manually. To limit personnel exposure to 3 rem, the exposure time must be less than about 0.2 minutes. Although this exposure time is very low, it is still possible to do work on the cask if it were designed properly.

13.3 Core Replacement (Cont'd)

Critical mechanisms should be located where they are readily accessible and can be shadow-shielded. A portable work shield which will allow limited remote access to these mechanisms should be obtainable. Local shielding within the cask and a portable work shield would significantly increase the personnel access time.

A specific criticism of the ORNL concept is the use of four hoists as shown in Figure 3.13. It appears that failure of a single hoist would prevent the assembly from hanging true and permit it to jam.

13.4 Component Replacement

Replacement of a heat exchange bundle or a pump impeller may require a special cask, not described by ORNL, with provisions for removing the decay heat. Because the heat capacity of the tube bundle is small its rate of temperature rise will be much greater than the graphite core. Because of the smaller size, weight, and radiation levels of these components, they require a much smaller cask than the core. Procedures for removal of the biological shield plugs and placement of a work shield would be similar to those for the core. Semi-remote methods would be required to cut welds or loosen bolts. The work shield would be removed, and a cask positioned over the component. It would then be withdrawn and deposited remotely. Detailed procedures would have to be prepared during the plant design.

13.5 Decontamination

MSRE experience indicates that particulate contamination can be almost entirely confined to equipment cells. Tools were bagged and later decontaminated. Particulate contamination has been successfully removed by high pressure water jets alone or with the aid of detergents. Inhibited acids have been used.

13.5 Decontamination (Cont'd)

ORNL proposes that the cask be decontaminated by using an unspecified decontaminating fluid circulated by high pressure pumps and ejected thru positionable nozzles inside the cask. A catch pan would collect the fluid. This approach appears feasible.

14.0 INSTRUMENTATION AND CONTROL

The instrumentation, control, and safety systems in the ORNL Reference Design have received no detailed design and very little conceptual design. Thus, the following discussion will be oriented more toward the control and safety philosophy than with specific details of implementation.

The function of the instrumentation and control system is to make the power plant behave as desired during all conceivable modes of operation. During steady state operation at full or partial power, or during any conceivable load transient or other external perturbation, the instrumentation and control system should keep all important plant parameters within previously determined limits. These limits, generally, are functions of the mode of operation.

Fine control of steam temperature is achieved by attemperation. 700 F feedwater is injected into superheated steam to maintain a mixed temperature of 1000 $\pm$ 1 F. This method is reported to be acceptable in principle to a major steam turbine manufacturer, but has never been demonstrated. Hence, this is a departure from conventional methods of control. It should be noted that supercritical steam cycles are by no means conventional or well established technology.

Coarse steam temperature control will be achieved by variable flow rate of the secondary salt. It is necessary to exercise control over the secondary pump speed to prevent secondary salt freezing in the steam generator following a rapid increase in load. When operating at less than full power, the secondary pumps will be running at less than full speed. A rapid increase in load results in a drop in steam temperature and pressure followed immediately by a drop in salt temperature at the outlet of the steam generator. To prevent salt freezing the secondary pump would be programmed to supply the energy required for the transient via increased flow and depletion of stored energy in the secondary

14.0 INSTRUMENTATION AND CONTROL (Cont'd)

system. The increased secondary flow cools the fuel salt leaving the intermediate heat exchanger which gives rise to a positive insertion of reactivity. Thus the power production is increased and, ultimately, the power production will again equal the load demand. To keep all temperatures within satisfactory limits, it appears necessary to program not only secondary flow rate, but control rod action as well. It is desired that all flow rate and reactivity control be programmed to respond to a single controller to avoid oscillations or instabilities which can be induced by multiple controllers in competition with each other.

14.1 Short-Term Reactivity Control

Two control and two safety rods have been proposed by ORNL. The control rods are 3-3/4 in. diameter graphite cylinders with axial flow passages for salt cooling. Each control rod was calculated[1/] to be worth 0.08 percent $\Delta k/k$ from fully withdrawn to fully inserted, for a total reactivity control of 0.15 percent. Because of their buoyancy in salt, their unrestrained position is fully ejected.

The two safety rods are described, only as being B_4C inside Hastelloy N and having a reactivity worth of about -1.5 percent $\Delta k/k$ each. These rods will normally be fully withdrawn and fully inserted for full shutdown. Presumably the weight of the Hastelloy N container is such that they would readily sink into the core against buoyant, pressure, and viscous forces, if the rod drive should fail.

More recently ORNL has indicated that four control rods may be necessary for normal operation. Based on the reported reactivity coefficient of -0.87×10^{-5} $\Delta k/k/^{o}C$, 0.12 percent $\Delta k/k$ of excess reactivity is required to override the temperature coefficient in going from 1050 F to 1300 F. The power reactivity decrement has not been

1/ MSR Program Semiannual Progress Report, Feb 28, 1970. ORNL-4548, page 64.

14.1 Short-Term Reactivity Control (Cont'd)

determined as yet but as a minimum, control rods must override the temperature decrement and the steady state xenon poison (~0.2 percent $\Delta k/k$). There appears to be no reason why the design could not be modified for four or more control rods.

During normal operation ORNL calculations show that reactivity insertion rates of only 0.01 percent/$\Delta k/k$/sec are adequate for control.

It is postulated that thermal shock to the primary piping, pump impellers, and primary heat exchanger, can result from a large reduction or loss of load. To prevent this shock, it is desired to be able to insert negative reactivity as fast as 0.05-0.1 percent $\Delta k/k$/sec. ORNL proposes that such reactivity insertion rates could be provided by air motors connected to the safety rods. Since air motors are unidirectional it is not possible for reactivity to be inserted at these rates. Reactivity insertion would be accomplished by independent, slow, electric motor drives. This concept offers the capability of fast reactivity withdrawal for setback without a scram and without introducing the possibility of fast reactivity insertion. These drive mechanisms appear entirely feasible and suitable for MSR's.

Short term reactivity control can be achieved by control and safety rod motion and also by adjustment of fuel salt composition by addition of fissile material. Short term reactivity control must provide adequate shutdown margin, override the power reactivity decrement, and provide sufficient excess reactivity at full power for dynamic control.

Of course the rate and total amount of fuel addition must be limited to comply with safety considerations.

14.1 Short-Term Reactivity Control (Cont'd)

The shutdown margin achieved with control elements can be small - probably only 0.25-0.5 dollar is sufficient. The power reactivity decrement is the composite effect of all reactivity feedback mechanisms arising from power production: The reactivity decrement arising from a temperature rise; possibly the reactivity decrement arising from element bowing due to temperature gradients; the change in effective delayed neutron fraction if flow is changed; the change in poison fraction due to the increased production rate of fission products, and perhaps many other mechanisms associated with power production.

The reactivity worth resulting from bowing of graphite elements has not been investigated and may be entirely negligible. Since the rectangular flow channels are unorificed and the power distribution is non-uniform, temperature gradients will exist across the elements. These gradients will tend to make the element ends bow outward. Since the matrix is bound at the top and bottom (as shown in Figure 9) the effect of bowing will be to tend to compact the core at its midplane. Because graphite is worth more than fuel salt, the result could be a positive component to the total power reactivity coefficient. If, however, the primary flow is proportional to power, the temperature gradients do not change with power, and this effect does not occur.

If the primary flow is made proportional to power, the effective delayed neutron fraction becomes a function of power. This effect could be substantial and would clearly be a negative component.

14.2 Long-Term Reactivity Control

ORNL has proposed that long-term reactivity adjustments be made by fuel salt composition adjustments. This, in

14.2 Long-Term Reactivity Control (Cont'd)

principle, could be accomplished by fuel addition or removal by the processing plant.

The reactor operation and control should not depend on the availability of the processing plant, however. The processing plant is likely to be down frequently for routine maintenance or repair during which power production should not be interrupted. Furthermore, it is desirable that the reactor be able to operate, albeit as a converter, inspite of prolonged outage of the process plant.

Thus, for reliability of operation, means for altering the fuel salt composition should be available apart from the processing plant. Another reason for alternate means of enrichment control is to provide fuel addition and removal rates faster than can be provided by the process plant. ^{135}Xe poisoning transients are too fast for the process plant (assuming a 1 gpm process stream) and too large for control rods. Utilities will want the flexibility of being able to start up anytime during the xenon transient. This could easily be accomplished by maintaining a supply of UF_4-LiF ready for dissolving in the fuel salt and a reservoir of depleted fuel salt ready for dilution.

The quantity of UF_4 required, and its insertion rate, is determined for startup capability following a scram. It is assumed that salt continues to circulate and helium bubbles are continuously injected and removed following the scram. The xenon transient in an MSBR is described in the following paragraph.

14.3 Xenon Transients

Immediately after the scram, the xenon production via direct fission yield ceases. The production of ^{135}Xe via ^{135}I decay, which is 83 percent of the total during operation,

14.3 Xenon Transients (Cont'd)

continues. Thus, after shutdown the production rate of ^{135}Xe immediately drops to 83 percent of its previous value and decreases exponentially as the iodine decays. Because of continual mixing of the salt, the xenon production rate (per cc of salt) is spatially uniform throughout the salt. Thus, it is assumed that the xenon flux on the graphite surfaces throughout the core is uniform.

Prior to shutdown there was a steady state spatial distribution of xenon in the graphite. But since xenon burnup is proportional to neutron flux, the xenon in the graphite is a minimum at core center and increases toward the edges. (In the reflector regions, the neutron flux is low and the xenon concentration in the graphite is such that its decay rate in the graphite equals its influx rate).

After shutdown xenon burnup in the core graphite ceases but the influx continues giving rise to a transient very similar to that experienced by fixed fuel reactors. Because of continuous purging, however, the peak is much smaller than in water reactors. Nevertheless, the poison fraction rises from an initial value of 0.5 percent to a peak of about 1.7 percent. This increase corresponds to a reactivity loss of approximately 0.5 percent $\Delta k/k$, probably more than the total excess reactivity available in four control rods. To override the xenon peak, fuel must be added in the amount of about 1 percent (14.7 kg fissile). The maximum rate of xenon buildup is only 0.34 percent poison fraction per hour and requires fuel at the initial rate of about 4 kg/hr for complete flexibility to override xenon at any time during the transient.

If the reactor were started and operated at full power at the xenon peak, the poison would burn out at a rate which

14.3 Xenon Transients (Cont'd)

would require dilution of the salt at an initial rate of about 9 ft^3/hr. In all, a total dilution of about 1 percent or 17 ft^3 is required. Alternately, the poison safety rods could be used until the process plant, which is designed for steady state operation, catches up. Salt enrichment and dilution systems could be programmed to take proper action for xenon override following any power transient.

There are other potential perturbations which could require larger amounts of fuel addition or dilution. The purge-gas system could fail resulting in the xenon poison fraction increasing from 0.5 percent to about 4.8 percent (if no ^{135}Xe were removed). To override this effect about 50 kg fissile must be added (3.5 percent of fissile inventory). A similar quantity of fissile would be required if the process plant were down for an extended period. Since the reactor would not operate as a breeder in this mode of operation, additional fuel would be required continuously. Assuming a conversion ratio of 0.7, about 0.7 kg fissile/day would be required for full power operation.

This reactor concept can easily be made to have flexibility of operation without depending on the process plant, purge-gas system, off-gas system, or high worth control elements. The ORNL Reference Design, however, has no provisions for adjusting the salt except in the process plant. This disadvantage can easily be rectified.

14.4 Measurements

Two potential problems exist in measuring neutron flux: First, making neutron detectors which will function reliably in a temperature range of 1000-1200 F; second, having a sufficiently large neutron flux outside the vessel for startup channels.

14.4 Measurements (Cont'd)

Quite possibly, it will be permissible simply to monitor delayed neutrons emitted at the vessel outlet nozzles. As a last resort, thimbles into the relfector could house neutron sensors for startup channels. Sensors inside thimbles would have to be cooled, probably by inert gas.

Temperature measurements would be made from thermocouples welded to the Hastelloy N piping, or possibly in wells in the inlet and outlet piping. Thermocouples would be located throughout all systems in the plant. No problems of temperature measurement are foreseen except, of course, if in-core temperature measurements should be required. We do not believe such in-core measurements will be required.

Flow rate measurements may not be possible. In view of the success of MSRE in which flow rate was inferred from pump speed measurements, direct flow rate measurements may not be necessary. Possibly relative flow rates can be deduced by measuring delayed neutron emissions at various points around the primary loops. Relative intensities at various points would be related to salt transient time between points of measurement.

In conclusion, the MSG is confident that adequate instrumentation, control, and safety systems can be designed for MSBR's within existing technology.

15.0 PLANT OPERATION

15.1 Load Following

In the normal power level operating range, 20 to 100 percent of plant load, certain plant variables are regulated to ensure the proper operating conditions throughout the plant as it follows the utility's power demands. Basic among these operating conditions are the requirements for constant steam pressure and temperature (3500 psig and 1000 F) to the high-pressure turbine and constant reheat steam temperature (1000 F) to the intermediate-pressure turbine. Throughout the heat transport train, the proper temperature head is maintained in the hot legs to hold the steam temperatures constant. The reactor inlet temperature and feedwater temperatures are also controlled to a constant value. This arrangement employs a fixed flow in the primary circuit and a variable flow in the secondary coolant systems.

The major system components require a minimum flow condition to maintain stability requirements for safe plant control. For heat exchangers a minimum design flow of 15 percent, and in the case of pumps, a minimum turn-down speed of 35 percent (excluding pony motors) can be assumed.

It would appear, therefore, that the normal operation of the plant, using a master load programmer in the range of 20-100 percent of plant load, is feasible.

15.2 Startup

The freezing temperatures of the primary and secondary salts are such that the salt systems must be filled and circulating isothermally at about 1000 F before power withdrawal can be initiated by decreasing the coolant salt temperature. To avoid freezing of the salt and to prevent excessive temperature gradients, the minimum feedwater temperature to the steam generators must vary between 1000 F at zero load to 700 F in the 8-100 percent power range. In addition, the afterheat load in the

15.2 Startup (Cont'd)

reactor system requires that the feedwater and heat rejection systems remain in operation at reduced load following shutdown of the main steam system. These requirements impose departures from the startup and shutdown systems used in conventional fossil-fired supercritical-pressure steam stations.

As previously stated, the possibility of running the reactor at high power with one or more loops down appears doubtful. Because of the minimum component flow criteria, the plant startup system could be greatly improved and benefit from the ability to add additional loops to the system during startup procedures. Even allowing for the use of pony motors of about 15 percent full flow will still result in transition step transients in the 0-20 percent of plant load range. The reactor heat generation plus pump energy input must balance the heat loss, heat removal and system heat sink absorption capacity. Dependent upon the startup time and step transients, the system heat sink capacity may result in unacceptable temperature limitation.

The system warmup could be achieved using the primary and intermediate pumps in conjunction with low core power levels. If the startup could begin with a single loop, then all the steam could be dumped directly to the condensers until the system temperatures and pressures are high enough to permit rolling the turbine ($\sim$2 percent power). At this point, a second loop could be started and the steam could be dumped to the condenser until steam conditions meet those of the turbine inlet. By gradually introducing steam to the turbine from the second loop until it reaches about 6 percent of full power, the turbine could be synchronized and loaded. The same procedure could be followed for the third and fourth loop.

At the end of the startup procedure the plant would be at 20 percent power level with a feedwater temperature of 700 F, a salt inlet temperature of 1050 F, and a salt outlet temperature of 1100 F.

15.3 Decay Heat Removal

After normal shutdown, decay heat will be removed by continued salt circulation in primary and secondary systems. The feedwater pump will be adjusted to supply enough water to carry away decay heat. The steam produced will drive the standby turbine which can supply in-house electrical requirements. (After many weeks the decay heat will become insufficient and the gas or oil-fired boiler may be required.) By regulating the feedwater flow the temperatures of the primary and secondary loops can be maintained conveniently above the melting temperature for a long time after shutdown. In addition, the coolant flow around the primary containment could allow some control of the fuel temperature when the heat production rate decays to a level comparable to the heat removal capability of that system. After a long time the electric heaters will be needed.

16.0 RADIOACTIVE MATERIAL DISPOSAL

ORNL has given little consideration to the disposal of radwaste other than to propose, as a philosophy, that it be stored on-site for the life of the plant. Of course, packaging and shipping to off-site reprocessing plants or burial grounds always remain an option.

A waste storage cell is shown beneath the reactor cell in Figure 3.19. Spent graphite, other solid wastes, and failed equipment would be stored there for the life of the plant. It would be cooled by circulating gas, probably nitrogen. No provisions exist for recovery.

It is desirable to isolate all radioactive material including wastes from the reactor system quickly and permanently so that a hypothetical accident cannot be postulated as a mechanism for releasing radwastes to the environment. It is also desirable to put radwastes in the safest possible form, i e as solids.

ORNL has not yet proposed a process for putting salt discard into solid form. Such a process must be developed, demonstrated to be technically sound and sociably acceptable before MSR's become a reality. We doubt that this will prove difficult.

17.0 TRITIUM PROBLEM

Estimated tritium production in the fuel salt of the reference 1000 MWe MSBR is much greater than in a light water reactor of the same electrical output. ORNL estimates the production rate to be about 2420 curies per day in the Reference Design. About half the tritium production results from the thermal neutron reaction $^{6}Li\ (n, \alpha)\ ^{3}H$ and nearly as much from the fast neutron reaction $^{7}Li\ (n, \alpha\text{-}n)\ ^{3}H$ with about 1.3 percent from ternary fission and a small contribution from $^{19}F\ (n, ^{17}O)\ ^{3}H$. The tritium problem is aggravated in the MSBR because at the temperatures and concentrations in the MSBR, elemental hydrogen tends to dissolve in most metals and hence, to diffuse through the metal walls of heat exchanger and steam generator tubes, as well as vessels and loop piping. Of major concern is the amount of tritium which diffuses in turn through the IHX and steam generator tubes into the steam-water system, since the problem of subsequent isolation of tritium from a large volume of water is well nigh insuperable.

Preliminary ORNL calculations indicate that for the reference design, roughly 13 percent of the tritium generated in the fuel salt would be removed in the off-gas systems as either T_2 or TF, roughly 18 percent would diffuse through the vessel walls and piping to the primary and secondary system containment cells and about 69 percent would reach the steam-water system.

Although many of the constants used in the calculation (diffusivities, solubilities, etc) are poorly known, the calculations appear to be sound. Individual constants can be changed substantially without affecting the nature of the problem.

17.1 Consequences of Tritium Release

The ideal solution to the tritium problem would be to minimize tritium production by changing the fuel salt composition to eliminate most of the lithium and beryllium content. Such an approach would virtually destroy any breeding potential of the reactor but might still lead to a reactor system capable of producing electricity economically.

17.1 Consequences of Tritium Release (Cont'd)

There is good reason to believe that any tritium released to the off-gas systems and to the containment cells could be isolated by various means either for indefinite storage or possibly for useful purposes.

There appears to be no acceptable method of disposing of tritium once it reaches the steam-water system. Even though it could be released in the cooling water discharge without exceeding concentrations permitted by current standards for liquid effluent releases, there are strong pressures to minimize such releases and a large MSBR industry could lead to an intolerable accumulation of tritium in the hydrosphere. The alternative of retaining the tritium in the steam-water system is equally unacceptable. In the first place, it is not practical to build and maintain a system of adequate leak tightness. Secondly, even if leak tightness could be assured, tritium accumulations in the water of the Reference Design would be at a rate of about 0.7 million curies per year and the risk of system rupture or blowing of relief valves would be intolerable. MSG agrees with ORNL that a reduction by at least a factor of 100 in the amount of tritium reaching the steam-water system in the Reference Design is absolutely necessary.

17.2 Measurements of Tritium Releases from MSRE

Shortly before operation of MSRE was terminated, attempts were made to measure tritium concentrations at various point to ascertain its behavior. The results of the measurements were somewhat inconclusive and certain inconsistencies were not recognized before the reactor was shut down. ORNL claims that calculations of tritium distribution made for MSRE conditions are in reasonable agreement with measured values. One observation which does not appear to be fully explained is that considerable amounts of tritium were being released from MSRE nearly three weeks after the reactor was shut down and drained.

17.2 Measurements of Tritium Releases from MSRE (Cont'd)

Calculations indicate a half-life for tritium in the MSRE fuel system of about 12 days compared to about a 12 minute half-life for the calculated MSRE Reference Design fuel salt. ORNL attributes the tritium holdup in MSRE to hydrocarbons deposited in the off-gas system as a result of inadvertent introduction of pump oil. However, there are questions regarding the behavior of the off-gas tritium content with heated CuO. In all probability there is some holdup of tritium in the MSRE in or on the graphite and in the metal walls as well as in oil decomposition products and similar holdup can be expected for MSBR. However, such holdup would be expected to reach steady state values during extended reactor operation and to have no important effect on tritium distribution.

Recent data[1/] obtained from the examination of MSRE data indicate that about 15 percent of the tritium ever produced in MSRE remains on the surface of the core graphite. It was also found on the inside surface of the Hastelloy N. It is speculated that residual hydrocarbons in the graphite combine with tritium through hydrogen exchange and put it into a chemical form less likely to escape. This is encouraging evidence suggesting that inert hydrocarbons exposed to the fuel and coolant salt may mitigate the problem.

17.3 Possible Solutions to the Tritium Problem

In principle the amount of tritium reaching the steam-water system can be reduced by:

1 - Reducing the rate of tritium production in primary salt.

2 - Impeding transport from fuel salt to coolant salt and/or from coolant salt to steam.

3 - Enhancing transfer from fuel salt and/or coolant salt to off-gas systems in competition with transport to the steam-water system.

1/ P N Haubenreich, "Conclusions from MSRE Operation and Post-Operation Examination", Presentation at ORNL Semiannual Information Meeting on Molten-Salt Reactor Program.

17.3 Possible Solutions to the Tritium Problem (Cont'd)

The following are some of the possible approaches which can be considered for solving the tritium problem. There is reason to believe that some combination will prove effective.

1 - Reduce or eliminate lithium and/or beryllium content of the fuel salt. With 99.995 percent enriched ^{7}Li in the MSBR Reference Design, ^{6}Li and ^{7}Li contribute nearly equal quantities of tritium. Neutron captures in Be produce ^{6}Li at essentially the same rate it is consumed. Hence, reduction of both Li and Be would be helpful. Suitable salts with acceptable melting points, uranium and thorium solubility and other properties might be found (e g, using such fluorides as NaF and AlF_3) but at a severe sacrifice in breeding ratio.

2 - Improve fuel salt purge efficiency.

a - Increase interface area between fuel salt and gas, possibly through use of salt sprays rather than gas bubbles.

b - Increase gas purge rate.

c - Increase the UF_4 to UF_3 ratio above 10^3 to favor the formation of TF rather than T_2, thus enhancing tritium removal to the fuel off-gas. The amount by which the ratio can be increased is limited by the higher risk of corrosion but MSRE experience indicates lower corrosion rates than expected even when the fuel salt was more oxidizing than planned.

d - Trap tritium in the off-gas system to minimize back diffusion through the salt film. This may be accomplished by sorption, chemical reaction or isotopic exchange. Suggested agents are oxides, getters such as Zr or hydrides such as ZrH_4 or hydrocarbons. Since a major fraction of the tritium may reach the off-gas as TF, the search for suitable agents should consider agents which will trap HF. Although cold-trapping would be useful, it would be advantageous to use an agent with a high affinity for tritium at elevated temperatures and preferably one which could be regenerated periodically by temperature cycling.

3 - Add hydrogen to the fuel salt, either as molecular hydrogen or a compound (e g, CH_4, -OH). ORNL has made calculations of the effect of adding hydrogen to the fuel salt.

17.3 Possible Solutions to the Tritium Problem (Cont'd)

3 - (Cont'd)

If one assumes that isotopic exchange (as well as chemical reactions) takes place rapidly at MSBR operating temperatures and that small isotopic effects on physical and chemical properties are negligible, the T/H ratio is identical for all chemical species. Hence the relative distribution of tritium to the various flow paths would be identical to that for hydrogen. Adding hydrogen increases the concentration of HF by the reaction.

$$1/2H_2 + F^- \longrightarrow HF + e$$

but since equilibrium is established when $C_{HF} = k\sqrt{C_{H2}}$, it is apparent that increasing the concentration of H_2 will decrease the concentration ratio of HF to H_2. Consequently, modest additions of H_2 (i e, H/T ratios of 10^2 to 10^4) have a deleterious effect in that they tend to reduce the fraction of the tritium reaching the off-gas as TF and to increase the fraction reaching the steam-water system. However, because diffusion rates of H_2 through metals vary as $\sqrt{CH_z}$, whereas the diffusion rate through salt or gas varies as $\sqrt{CH_z}$, a very high H_2 addition rate (H/T ratio $> 10^6$ for the reference MSBR) would be effective in decreasing the fraction of tritium reaching the steam-water system to a tolerable level. However, the quantity of H_2 to be isolated from the off-gas system for storage is increased enormously. ORNL has even suggested that isotopic separation of tritium from hydrogen might be considered to ameliorate the waste problem or concentrate tritium for possible use. It may also be noted that the ORNL calculation apparently assumes that H_2 like T_2 is born in the fuel salt. Since this is obviously not possible, the H/T ratio in the off-gas is likely to be orders of magnitude higher than considered.

Addition of a hydrogen compound, such as CH_4, to the fuel salt might be more effective than adding molecular hydrogen,

17.3 Possible Solutions to the Tritium Problem (Cont'd)

3 - (Cont'd)

but the problems would be similar. This case has not been analyzed. Modest additions of H_2O or LiOH (to remove tritium as TOH in the off-gas) might be beneficial but is likely to cause corrosion problems or to precipitate BeO.

Following the discovery that a substantial amount of tritium produced in MSRE was found to be trapped quite firmly in or on the graphite, ORNL staff suggested that a large surface area of graphite be provided either as fixed beds in the coolant loop or suspended particles in the coolant loop[2/,3/,4/]. The Molten Salt Group speculates that tritium trapping on MSRE graphite was probably largely the result of an isotopic exchange reaction with relatively stable hydrocarbons resulting either from incomplete pyrolysis of the binder during production of the graphite or quite probably deposition of pump oil decomposition products with only minor contributions from any direct reaction between tritium and graphite. If this view is correct, it would be desirable to pretreat the graphite to enhance its hydrocarbon content. The results of MSRE analysis tend to confirm the observations of Section 17.2. The ORNL proposals are novel embodiments of the general approach in items 3 and 5. Although ORNL seems to prefer application to the coolant salt, similar methods with some restrictions could be applied to the fuel salt. Tritium removal from the fuel salt system is likely to be most rewarding. We are skeptical that any permanent sink for tritium is likely to be found. Unless the trap is continuously or periodically replaced or regenerated, it eventually becomes saturated to the extent that tritium concentrations in the salt (and hence, permeation rates) approach those in the absence of the trapping mechanism[5/,6/].

2/ MSR-71-35.
3/ MSR-71-36.
4/ MSR-71-46
5/ P S Gill, R E Toomey, H C Moser, "Reactions of Hydrogen and Tritium Along with Carbon at 77°K".
6/ Carbon, 1967, Vol 5, pp 43-46, Pergamon Press, Ltd.

17.3 Possible Solutions to the Tritium Problem (Cont'd)

4 - Improve the coolant salt purge efficiency by any of the methods suggested for the fuel salt purge. Since the coolant salt contains no uranium, adjustment of the UF_4/UF_3 ratio is not applicable, but an equivalent oxidizing agent might be considered.

5 - Addition of hydrogen or its compounds to the coolant salt. Any addition of hydrogen to the fuel salt results in a comparable increase in coolant salt hydrogen content. In fact, since the diffusivity of H atoms through metal probably is greater than diffusivity of T atoms by the inverse square root of the atomic masses, the H/T ratio in the coolant salt is likely to be higher than that in the fuel salt. Similarly any addition of molecular hydrogen to the coolant salt would be reflected in the fuel salt. It is doubtful that direct addition of molecular hydrogen to the coolant salt would be practiced. ORNL has suggested that moderate amounts of H_2O could be added to (and continuously purged from) the coolant salt without seriously affecting the corrosion properties. In fact there is some question whether measures taken to remove H_2O and oxides from fluoroborate coolant salt have been completely effective, so that the coolant salt may have a natural affinity for tritium. However, it is very likely that the presence of small amounts of H_2O in fluoroborate salt would result in hydrolysis and the formation of relatively stable hydro or hydroxy fluoroborates (e g, HBF_4, $NaBF_3OH$ or $Na_2B(OH)_2F_3$) so that tritium might be trapped in the coolant salt in a form not readily purged. In such a case, the free tritium concentration would eventually build up to a steady state level approaching that in the absence of a trapping mechanism. Consideration has also been given to use of ZrH_4 in the coolant salt loop.

6 - Coatings on heat exchanger and steam generator tubes. It is known that certain metals, such as tantalum and tungsten do not dissolve hydrogen. A thin coating of such metals on the tubes would be effective in reducing tritium transport,

17.3 Possible Solutions to the Tritium Problem (Cont'd)

6 - (Cont'd)

but it is questionable whether the cost could be justified or whether coatings with adequate integrity could be applied. There is also evidence that thin glassy coatings on metals can reduce the transport of hydrogen. The prospects of producing and maintaining an adequate glass coating at reasonable cost are small. Oxide coatings can have a similar effect. There is a prospect that with proper choice of tube material a self-healing oxide coating would form on the steam side of the steam generator tubes which, possibly with other measures, would reduce tritium transport to the steam to an acceptable level. Of course, fluoride salts are effective fluxing agents which would remove such coatings from the salt side of steam generators and heat exchangers.

7 - An additional loop between the coolant salt loop and the steam water system. Consideration has been given to gas and such low melting salts as nitrate-nitrite mixtures (e g, Hytec) for this purpose. The simplest embodiment of this concept would be double wall tubes in the steam generator and superheater with a (vented) gas gap. Nitrate-nitrite mixtures, which have been commonly used for high temperature heat transfer fluids, have instability and corrosion properties in the temperature range desired for MSBR. Because of their low melting point, they might alleviate some problems in preventing coolant freezing. It might be that a suitable composition salt could be found for this application. ORNL has given brief consideration to a concept in which a "fourth loop" would be used only for the steam generators and not for the superheaters or reheaters. This approach, in itself, would have little advantage because the surface area in the superheaters and reheaters of the MSBR exceeds that in the steam generators and the higher salt and metal temperatures in these regions

17.3 Possible Solutions to the Tritium Problem (Cont'd)

7 - (Cont'd)

enhance tritium diffusion. ORNL calculations for the reference MSBR indicate that only about 42 percent of the tritium reaching the steam water system arrives via the steam generator tubes. It is to be expected that a nitrate salt would be strongly oxidizing and hence an effective trap for tritium. The ORNL scheme also proposes substitution of 2LiF BeF_2 for the sodium fluoroborate coolant salt since the former is expected to have a higher tolerance for H_2O.

8 - Substitution of gas coolant for sodium fluoroborate. Use of He gas as the secondary coolant for an MSBR would permit removal of tritium and minimize transport to the steam-water system. Several alternatives are possible:

a - Simple gas coolant with cleanup (by getters, traps, etc) to remove tritium.

b - Addition of water vapor with an associated cleanup.

c - Fluidized bed, with cleanup for tritium removal. The principal advantage of the fluidized bed technique is to enhance heat transfer, possibly with reduced salt-side tube surface area and hence less tritium migration.

17.4 Comparison of Xe Removal and T_2 Removal from Fuel Salt

The basic removal requirements for Xe and T_2 are as follows:

Xe: 0.5 percent poison fraction with unsealed graphite.

T_2: No more than one curie per day of tritium reaches the steam-water system. Assume negligible purge of coolant salt and no sealing of tubes against H_2 penetration. Assume that UF_4/UF_3 ratio of 10^4 is tolerable and used because it seems to be essential in order to approach the goal.

17.4.1 Limitations of Circulating Bubbles

The maximum permissible loop averaged bubble fraction is about 0.2 percent. Even this value probably exceeds 1 percent void fraction in core. The nominal

17.4 Comparison of Xe Removal and T_2 Removal from Fuel Salt (Cont'd)

17.4.1 (Cont'd)

average bubble diameter is 0.02 in. This is arbitrary but believed to be practical. Combined with 0.2 percent loop bubble fraction, this gives an interface area of 9,430 sq ft. The maximum purge rate is about 100 scfm corresponding to full flow bubble separation (100 percent) compared with 10 percent bypass flow of about 10 scfm for the Reference Concept.

17.4.2 Salt-Gas Interface Area

The target removal of tritium requires a salt-gas interface area of at least 43,400 sq ft. This cannot be achieved with the limitations imposed on the circulating bubble concept.

Tritium removal is far less sensitive to the interface area than xenon. However, with the gas purge rate and 0.2 percent loop gas volume fraction and 0.02 in. bubbles, the percentage of the tritium reaching the steam water system is calculated as 1.67 percent compared to the target of 1 percent. Increasing the interface area by a factor of 2.5 (e g, by smaller bubbles) would reduce the fraction of tritium reaching the steam to 1.23 percent, whereas it would require an increase in the interface area by a factor of 250 to reduce the fraction of tritium reaching the steam to 1 percent. The increase in interface area does improve the purging of T_2 but actually results in a small reduction in the fraction purged as TF which is about 98 percent of the tritium production even with the 0.2 percent bubble volume fraction of 0.02 in. bubbles. The conclusion is that xenon removal would set the interface area.

17.4.3 Gas Purge Rate

Xenon removal is virtually independent of gas purge rate in the range of interest. This is evident from the

17.4 Comparison of Xe Removal and T_2 Removal from Fuel Salt (Cont'd)

17.4.3 (Cont'd)

ORNL curves which show that the bubbles could make about 20 passes around the loop before the xenon poison fraction increases significantly. The reason is that xenon is very insoluble in the salt and the gas is far from saturated.

The tritium removal is quite sensitive to purge gas rate. For example, with interface area of 23,800 sq ft (0.5 percent loop average bubble fraction, 0.02 in. bubbles) and UF_4/UF_3 ratio of 10^4, 32 percent of the tritium reaches the steam water system when the purge gas rate is 10 scfm but only 1.23 percent when the purge gas rate is 100 scfm and 0.04 percent when the purge gas rate is 1000 scfm. The reason is the relatively high solubility of TF in the fuel salt so that the gas tends to saturate at low purge rates.

17.4.4 Side Stream Stripping

In the oversimplified model used, it has been assumed that the removal is determined by the bulk concentration in the salt and the interface area. This is essentially true with circulating bubbles even if the bubbles are removed from a fraction of the salt flow in a side stream, as proposed for the Reference Concept. It may also be true for side stream operation of a spray separator provided the bulk concentrations in the salt are relatively high compared to the generation and removal rate, i e, when the bulk concentration in the salt leaving the gas separator is very nearly equal to that entering the gas separator.

It can be shown that for unsealed graphite the ^{135}Xe concentration in the salt for 0.5 percent poison fraction must be 2.6×10^{-7} g-moles/ft^3. The production rate for 2250 MWt operation is about 6.9×10^{-6} gm-moles/sec.

17.4 Comparison of Xe Removal and T_2 Removal from Fuel Salt (Cont'd)

17.4.4 (Cont'd)

The xenon inventory in the salt is thus equivalent to about 70 seconds production compared to a loop transit of 13.3 seconds. Since the xenon inventory in the salt is produced in something like five loop transits, it is evident that side stream operation would affect the removal effectiveness. This means only that a side stream gas separator would require somewhat more than the minimum salt-gas interface area and a more detailed analysis is warranted.

In the case of tritium, the fuel salt inventory of T_2 (assuming about 2-3 percent of the tritium is in the form of T_2 with the balance being TF) corresponds to about 25 to 38 seconds of production whereas the fuel salt inventory of TF corresponds to some 1430 seconds of production. Obviously, a side stream operation of a gas separator would not significantly affect the efficiency of T_2 purging, whereas a relatively small side stream should be quite effective in removing TF provided, of course, that the droplet size and residence time are such as to furnish the needed interface area. Inasmuch as, by far, the largest part of the tritium will be removed as TF, there is probably more to be gained by enhancing TF removal from a side stream than to go to full-stream operation to get out more T_2. The logical approach is to increase the gas purge rate or possibly use getters for HF in the gas separator.

There are likely to be practical difficulties in putting getters in the gas separator, although there are undoubtedly a number of methods for cleaning up the purge gas for recycle. It should also be noted that holdup for xenon decay is also needed, but this need not require any more holdup volume than that proposed

17.4 Comparison of Xe Removal and T_2 Removal from Fuel Salt (Cont'd)

17.4.4 (Cont'd)

by ORNL for the Reference Concept.

Note that the models used for the calculations are quite crude and many of the constants used (particularly mass transfer coefficients) are questionable, but the general conclusions reached are not likely to change as a result of refining numerical values.

17.4.5 Summary

The minimum required salt-gas interface area is determined by the xenon removal requirement. Increasing the area has little effect on tritium removal.

The purge gas rate is determined by the tritium removal requirement. Increasing the purge gas rate has little effect on xenon removal.

While side stream degassing of a fraction of fuel salt is probably feasible, it will require an increase in salt-gas interface area above the minimum to achieve the target removal of xenon.

18.0 ACKNOWLEDGEMENTS

As always in such circumstances, it is impossible to acknowledge all of those whose encouragement and support made this study possible. However, it is a step in the right direction to express appreciation to the following:

Houston Lighting & Power Company

P H Robinson - Chairman
Carl B Sherman - President
K K Kreamer - Senior Vice President
John M McReynolds - Vice President
G W Oprea - Manager, Energy Control and Nuclear Program

Kansas Gas and Electric Company

Gordon Evans - Chairman
E S Hall - Vice President
Norman Pinkstaff - Coordinating Director

Middle South Services, Inc.

Gerald Andrus - Chairman
Floyd W Lewis - President, Middle South Utilities and formerly President Louisiana Power & Light Company
Reeves E Ritchie - President, Arkansas Power & Light Company
R Baxter Wilson - Chairman, Mississippi Power & Light Company
Lionell Cucullu - Former President New Orleans Public Services Company, Inc
William M Brewer, Jr - Vice President, Middle South Services
Dr Knox Broom - Manager, Nuclear Activities

Minnesota Power & Light Company

Jack F Rowe - Executive Vice President

Northeast Utilities Service Company

Marlowe G Moses - Senior Vice President
S Hale Lull - Vice President, Electric Systems Development
G R Parkos - Reactor Engineer

Texas Utilities

C A Tatum, Jr - President
L J Blaize - Vice President
L S Turner, Jr - President, Dallas Power & Light Company
Perry G Brittain - Vice President, Engineering and Purchasing, Dallas Power & Light Company
Burl B Hulsey, Jr - President, Texas Electric Services Company
E D Scarth - Vice President, Engineering, Texas Electric Services Company
Howard Drew - Director Research, Texas Electric Service Company

Texas Power & Light Company

T L Auston, Jr - President
George W Beams - Senior Vice President
John B Robuck - Vice President, Engineering

Union Electric Company

Earl K Dille - Executive Vice President
Burret Carother - Senior Vice President
Dr Gerald E Dreifke - Manager, Research and Development

Babcock & Wilcox Company

W H Rowand - Vice President
Dr P H Reinker - Vice President, Nuclear Power Generation
R A Webb - Manager, New Products and Services

Borg-Warner Corporation

John P Adams - President and General Manager, Byron Jackson Pump Division

Cabot Corporation

William D Manly - Vice President, Engineered Products Group
John D Leslie - General Manager, Stellite Division

Continental Oil Company

Howard W Blauvelt - President, CONOCO Chemicals
Dr M L Sharrah - Vice President and General Manager, Research and Development Department

Ebasco Services, Inc

L F C Reichle - Vice President, Nuclear Department

Union Carbide Corporation

Dr John A Swartout - Vice President

We wish to express our appreciation to Dr Glenn T Seaborg, Chairman U S Atomic Energy Commission and AEC Commissioners Dr C E Larson and Wilfrid E Johnson, who attended the meeting at the Commission offices at which the program of the Molten Salt Group was described, and who gave their encouragement.

We acknowledge the great cooperation of the members of the Molten Salt Program Staff at Oak Ridge National Laboratory in making available technical information and engaging in many discussions with the Group and express special thanks to Dr A M Weinberg, Director, Oak Ridge National Laboratory and Murray Rosenthal, Program Director, Molten Salt Reactor Program.