ORNL
MASTER COPY

OAK RIDGE NATIONAL LABORATORY
operated by
UNION CARBIDE CORPORATION • NUCLEAR DIVISION
for the
U. S. ATOMIC ENERGY COMMISSION

APR 15 1971

ORNL-TM-3194

EQUIPMENT FOR THE DISSOLUTION OF CORE MATERIAL FROM SHEARED POWER REACTOR FUELS

W. S. Groenier

NOTICE This document contains information of a preliminary nature and was prepared primarily for internal use at the Oak Ridge National Laboratory. It is subject to revision or correction and therefore does not represent a final report.

This report was prepared as an account of work sponsored by the United States Government. Neither the United States nor the United States Atomic Energy Commission, nor any of their employees, nor any of their contractors, subcontractors, or their employees, makes any warranty, express or implied, or assumes any legal liability or responsibility for the accuracy, completeness or usefulness of any information, apparatus, product or process disclosed, or represents that its use would not infringe privately owned rights.

ORNL-TM-3194

Contract No. W-7405-eng-26

CHEMICAL TECHNOLOGY DIVISION

EQUIPMENT FOR THE DISSOLUTION OF CORE MATERIAL FROM SHEARED POWER REACTOR FUELS

W. S. Groenier

APRIL 1971

OAK RIDGE NATIONAL LABORATORY
Oak Ridge, Tennessee
operated by
UNION CARBIDE CORPORATION
for the
U. S. ATOMIC ENERGY COMMISSION

CONTENTS

Page

ABSTRACT 1

1. INTRODUCTION 1

2. SHEAR-LEACH PROCESS. 3

3. REVIEW OF EARLY AND EXISTING DISSOLVERS. 6

3.1 Historical. 6

3.2 ORNL Dissolvers for Sheared Fuel. 12

3.3 Dissolvers at Other National Laboratories 24

3.4 Dissolvers Employed in Commercial Reprocessing Plants in the United States. 24

3.4.1 Nuclear Fuel Services Plant. 24
3.4.2 Midwest Fuel Recovery Plant. 26
3.4.3 Barnwell Nuclear Fuel Plant. 28
3.4.4 Preliminary Designs for Other Plants 28

3.5 Dissolvers in Use at Foreign Reprocessing Plants. . . . 30

3.5.1 Eurochemic Facility. 30
3.5.2 Reprocessing Facilities in the United Kingdom. . 33
3.5.3 Scandinavian Reprocessing Facility 33
3.5.4 Reprocessing Plants in France. 34
3.5.5 Reprocessing Plants in Germany 34
3.5.6 Reprocessing Plants in Italy 34
3.5.7 Reprocessing Plants in India 34
3.5.8 Reprocessing Plant in Japan. 37
3.5.9 Nuclear Fuel Reprocessing in the U.S.S.R. . . . 37

3.6 Summary of Dissolver Survey 37

4. NEW DISSOLVER CONCEPTS AND MODELS. 37

4.1 Summary of New Dissolver Concepts 52

5. ACKNOWLEDGMENTS. 53

6. REFERENCES 54

EQUIPMENT FOR THE DISSOLUTION OF CORE MATERIAL FROM SHEARED POWER REACTOR FUELS

W. S. Groenier

ABSTRACT

A survey of all known existing equipment and concepts for the dissolution of sheared nuclear power reactor fuels has been made. With respect to existing equipment, it was revealed that an effective device applicable to the dissolution of sheared LMFBR fuels does not exist.

New dissolver concepts representing current approaches to the continuous dissolution of LMFBR fuels are described. Hopefully, these concepts have the necessary features to meet the requirements of residence time; mixing; fuel feeding, transport, and discharge; criticality; and off-gas collection.

It appears that the development of an effective dissolver for LMFBR fuels will be feasible if the desirable features found in existing equipment and concepts are combined with the current approaches exemplified by the new concepts.

1. INTRODUCTION

Dissolution equipment of the type currently used in processing nuclear power reactor fuels may not be suitable for the processing of Liquid Metal Fast Breeder Reactor (LMFBR) fuels. Arguments that support this reasoning include the following:

(1) An economic LMFBR fuel cycle demands a short turnaround time, which means that the fuel must be processed soon after its discharge from the reactor; cooling times will be sufficiently short (perhaps as short as 30 days) to cause possibly serious heat dissipation problems in the dissolution equipment as the result of the presence of short-lived fission products. Heat generation values as high as 200 W/kg of fuel can be expected.

(2) The LMFBR fuels contain significantly greater plutonium contents (perhaps 240 g Pu/kg fuel), thereby necessitating a circumspect study of nuclear criticality in dissolution equipment and also requiring assurance that the dissolver environment is severe enough to allow complete dissolution of the plutonia to occur.

(3) Because of high specific power requirements within the reactor, the LMFBR fuel rods are much smaller in diameter than conventional fuel (Light Water Reactor) rods, thus resulting in a high cladding/fuel weight ratio (1.7) that must be reckoned with in the dissolver.

(4) Economic considerations are producing a trend toward larger-sized processing plants, which require greater reliability and indicate an increased use of automated, continuous equipment.

In the past, little effort has been expended on the design of continuous dissolvers. However, much has been done to establish the technology of batch dissolution, especially as applied to commercial power reactor fuels. Unfortunately, even these efforts were frequently directed toward a specific fuel design rather than toward a broad class of fuel types. Nevertheless, several worthwhile dissolver designs and concepts have emerged from the nearly two decades that the nuclear power industry has been in existence. These are reviewed in the sections that follow. This review is restricted to existing dissolvers, dissolver designs, and concepts that are applicable to a method of processing sheared or chopped fuels in which the cladding remains essentially intact (unless noted otherwise).

New dissolver concepts that apply especially to LMFBR fuels are also discussed in the following sections. Most of them involve continuous operation. These concepts form a base from which additional development can provide: (1) the required reliability of operation,

(2) an assurance of criticality and temperature control, and (3) a certainty of application to a variety of LMFBR fuel types, including oxide, carbide, nitride, bonded, and unbonded fuels, which is essential to the LMFBR program objectives. These objectives are: (1) application of the present aqueous processing technology to LMFBR fuels, (2) development of new technology that will allow adaptation of existing facilities to near-term LMFBR processing, and (3) the design of new facilities for long-term processing needs.

2. SHEAR-LEACH PROCESS

At the present time, the aqueous method of processing appears to be the one that is most widely accepted. It is the method used at the first U. S. commercial processing facility, Nuclear Fuel Services, Inc.* (NFS). Also, it has been chosen by the USAEC as the method most likely to be used for processing LMFBR fuel. Within the overall scope of aqueous processing, the practice of segmenting fuel by shearing or chopping, with the subsequent dissolution of core material from within the segments of fuel cladding, is known as the shear-leach process. Its capability for adaptation to a wide variety of fuel materials, sizes, and configurations and its proven reliability make this process the obvious choice for use as the head-end operation.[1-3]

In the shear-leach process, spent power reactor fuel is mechanically reduced to a size that is compatible with the chosen dissolver geometry and dissolution conditions. Frequently, the fuel assembly is taken apart by, first, removing the end hardware by sawing or similar means and, then, removing the sheath that surrounds the fuel rods by slitting or perhaps by simply sliding the tubes out of the sheath (see Fig. 1). The liberated fuel rods may be sheared either singly or as bundles. It is also possible to shear the entire assembly directly, although this procedure adds to the burden of nonnuclear material that the dissolver must handle. In existing facilities, the sheared material is collected in a container that is eventually loaded into a batch-type dissolver.

*A division of Getty Oil Co.; located at West Valley, N. Y.

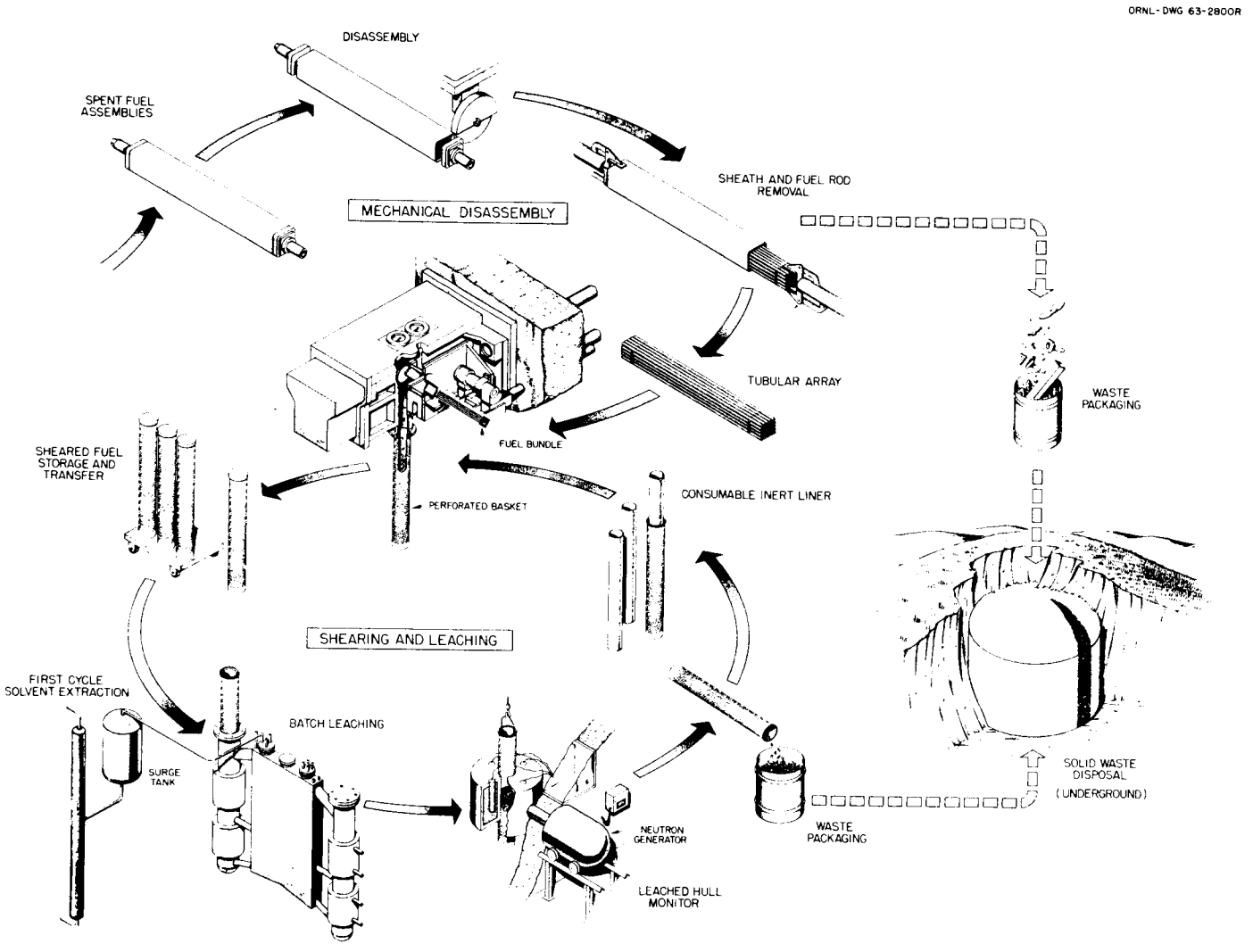

Fig. 1. Flowsheet for Shear-Leach Process Incorporating Modified Leacher with Slab-Type Acid Reservoir.

Dissolver designs and concepts must provide for the proper exposure of the fuel to the dissolvent. Proper exposure implies control of the residence time of the fuel in the dissolver and the temperature of the dissolver, as well as provisions for exposing new fuel surfaces by agitation and for collection of off-gases for disposal or reflux. In continuous equipment, separate controls for fuel agitation and fuel advancement through the unit appear to be desirable.

In existing facilities, reactions are regulated by controlling the acid concentration and the temperature. For example, in the NFS facility, a dissolution cycle is initiated by subjecting the UO_2 fuel to a mild dissolvent consisting of rinse water from the previous cycle plus new nitric acid. As the cycle advances, the acid concentration and the temperature are increased until dissolution is considered complete. After the dissolver solution has been drained off, the empty fuel segments (hulls) are rinsed with water, removed from the dissolver, and inspected for residual activity. Off-gases that are evolved during dissolution pass, first, through a downdraft condenser (which returns necessary nitrous and nitric acids to the dissolver), and then successively to a caustic scrubber, iodine removal apparatus, and filters.[4,5]

New concepts for devices for dissolving LMFBR oxide fuels must take into consideration the increased quantity of off-gas generated by these high-burnup fuels, since this may cause foaming in the equipment. Because of the high heat generation rate exhibited by short-cooled fuels, it is probable that heat will have to be removed, rather than added, to control the dissolution rate. It is also likely that a greater proportion of the fuel will be dislodged from the cladding because of its high-burnup history, its subjection to a high-temperature oxidation treatment prior to dissolution (to remove sodium and fission product gases), the short-length shearing, or a combination of these reasons. The resulting "fines" would undoubtedly react vigorously with the dissolvent. The higher fission product content of LMFBR fuels will probably result in an increased amount of residue after the uranium and plutonium oxides have dissolved. This material either will be suspended in the dissolver solution product and have to be recovered, possibly by

filtration, or will be allowed to accumulate in the dissolver and have to be removed periodically. Additional considerations may have to be made when the advanced LMFBR fuel types, such as carbide or nitride fuels, are treated.[6]

The various dissolvers described below may or may not be amenable to adaptation to LMFBR processing. In cases where it is obvious that they do not apply, pertinent remarks to this effect are included. The new concepts that are discussed in a subsequent section have been formulated especially for use in advanced processing activities where equipment is operated continuously rather than batchwise.

3. REVIEW OF EARLY AND EXISTING DISSOLVERS

A review of dissolution equipment is presented to show that none of the existing devices will efficiently perform the task of dissolving LMFBR fuels (of the types currently planned) in new facilities. Throughout the review, the terms leacher and dissolver are used interchangeably to designate these devices; however, leacher is actually more appropriate for sheared fuel.

3.1 Historical

Prior to the development of the shear-leach process, which dates from 1957, considerable work had been done on dissolution as applied to both the batch and the continuous dissolution of uranium metal and uranium-aluminum-alloy fuels.[7-12] This work proved to be useful in the subsequent efforts made to design devices for dissolving sheared fuel because many of the parameters had already been investigated. In early batch or pot dissolvers, the problems associated with fuel charging, off-gas emission, control of reaction rate, etc., had to be considered. The importance of maintaining a large area of fuel surface for acid attack was soon recognized. The first continuous dissolvers of the pot, column, or slab type were operated to solve the problems of fuel charging, maintenance of fresh dissolvent adjacent to fuel surfaces (recirculation), and suspension of fines. Whereas many of the

batch pot dissolvers were operated with a noncritical inventory of fuel, desired scale-up in batch and continuous dissolvers to maintain large surface areas resulted in the necessity for restrictions to critically safe geometries. These considerations remained important in the development of dissolvers for sheared fuel; in addition, a further complication arose. The fuel cladding material, which is largely inert to the dissolvent, had to be removed at the conclusion of the dissolution cycle.

Typical dissolvers from this early period (see Fig. 2) include batch or continuous pot dissolvers, upflow column dissolvers, downflow or trickle column dissolvers, and slab dissolvers.[7-12] Generally, the latter three types were operated continuously. The dissolver shown in Fig. 3 included two cylindrical fuel dissolution zones connected by a common acid reservoir of slab geometry. This unit was designed to operate either batchwise or continuously and was critically safe for a particular fuel enrichment. These units are not suitable for modern-day processing because, in addition to other factors, they do not provide for the removal of inert cladding materials that enter with the feed.

At least two dissolvers were designed for fuels having a sizable amount of inert material to be removed. One was a critically safe rotary-slab dissolver (see Fig. 4), or "Persian Wheel," for continuous charging and discharging.[13] The other was a spiral-vibrating-tray design (Fig. 5) in which the fuel was to be fed to the bottom of the unit, vibrated upward along a spiral path flooded with dissolvent, and discharged near the top. Although the first of these dissolvers was built and apparently operated successfully, additional testing showed that some buildup of solids eventually occurred on the walls of the unit. This unit had two other disadvantages which make its application to LMFBR processing suspect: it was not amenable to air sparging to provide additional mixing, and off-gas collection would be difficult. The vibratory model, designed for unclad or aluminum-clad fuels, was never constructed.

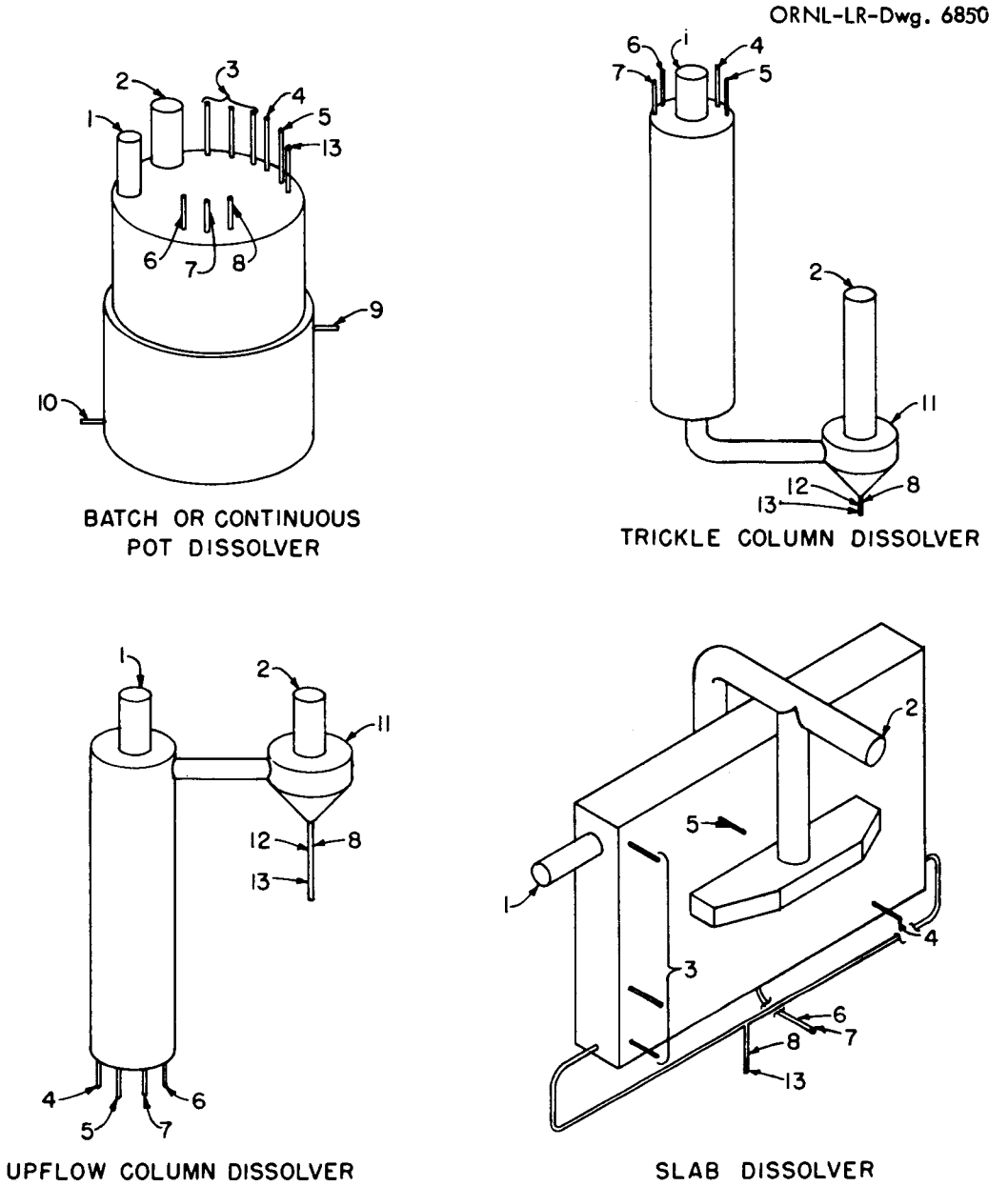

(1) Fuel loading port; (2) line to off-gas equipment, condenser, etc.; (3) liquid-level specific gravity probes; (4) thermocouple well; (5) pressure tap; (6) feed inlet; (7) condensate return line; (8) sampler; (9) pipe for jacket steam and water; (10) condensate drain; (11) product gas-disengaging cyclone; (12) product specific gravity determiner; (13) product transfer line.

Fig. 2. Various Types of Early Devices for Dissolving Nuclear Reactor Fuels.

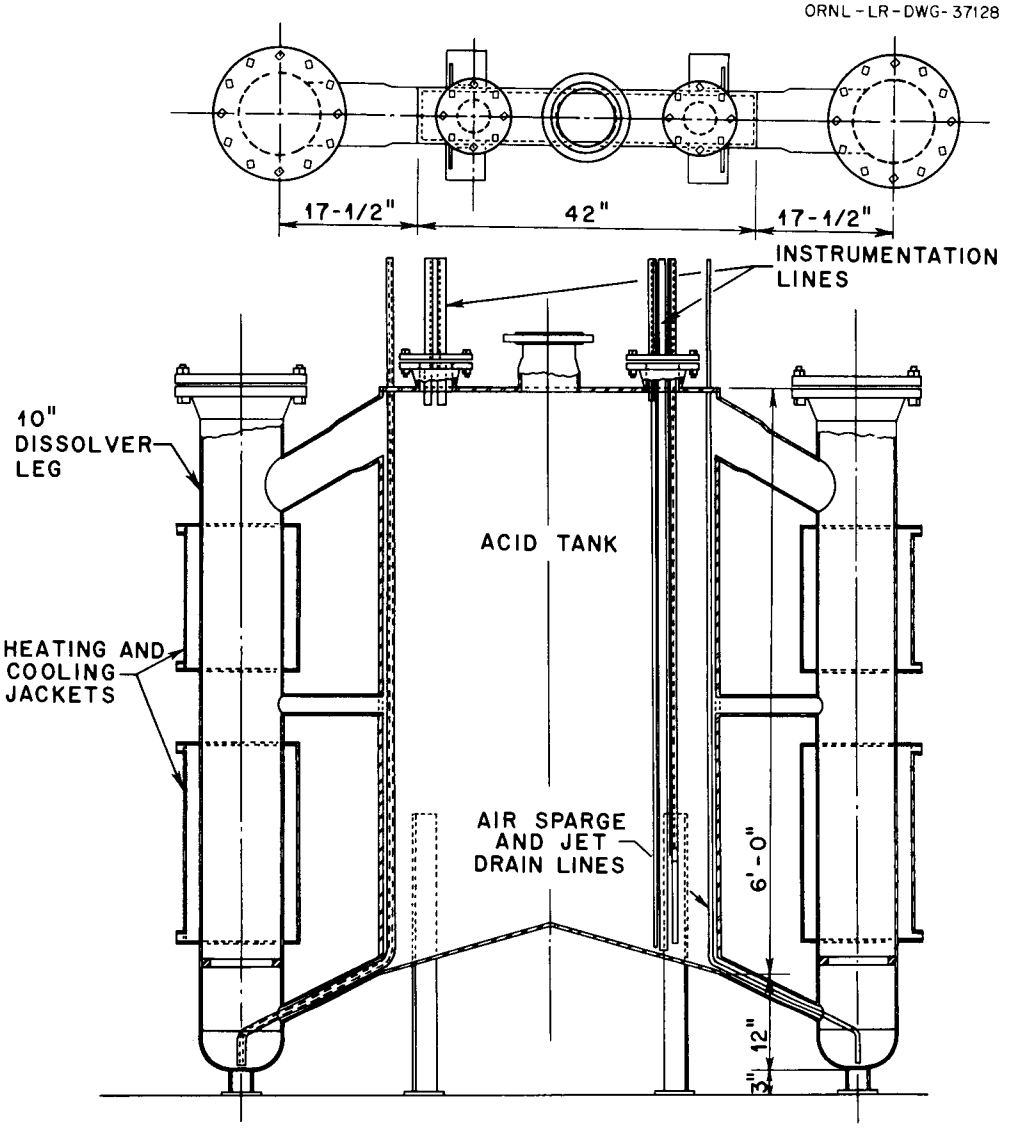

Fig. 3. Dissolver with Slab-Type Acid Reservoir.

ORNL-LR-DWG 17529A

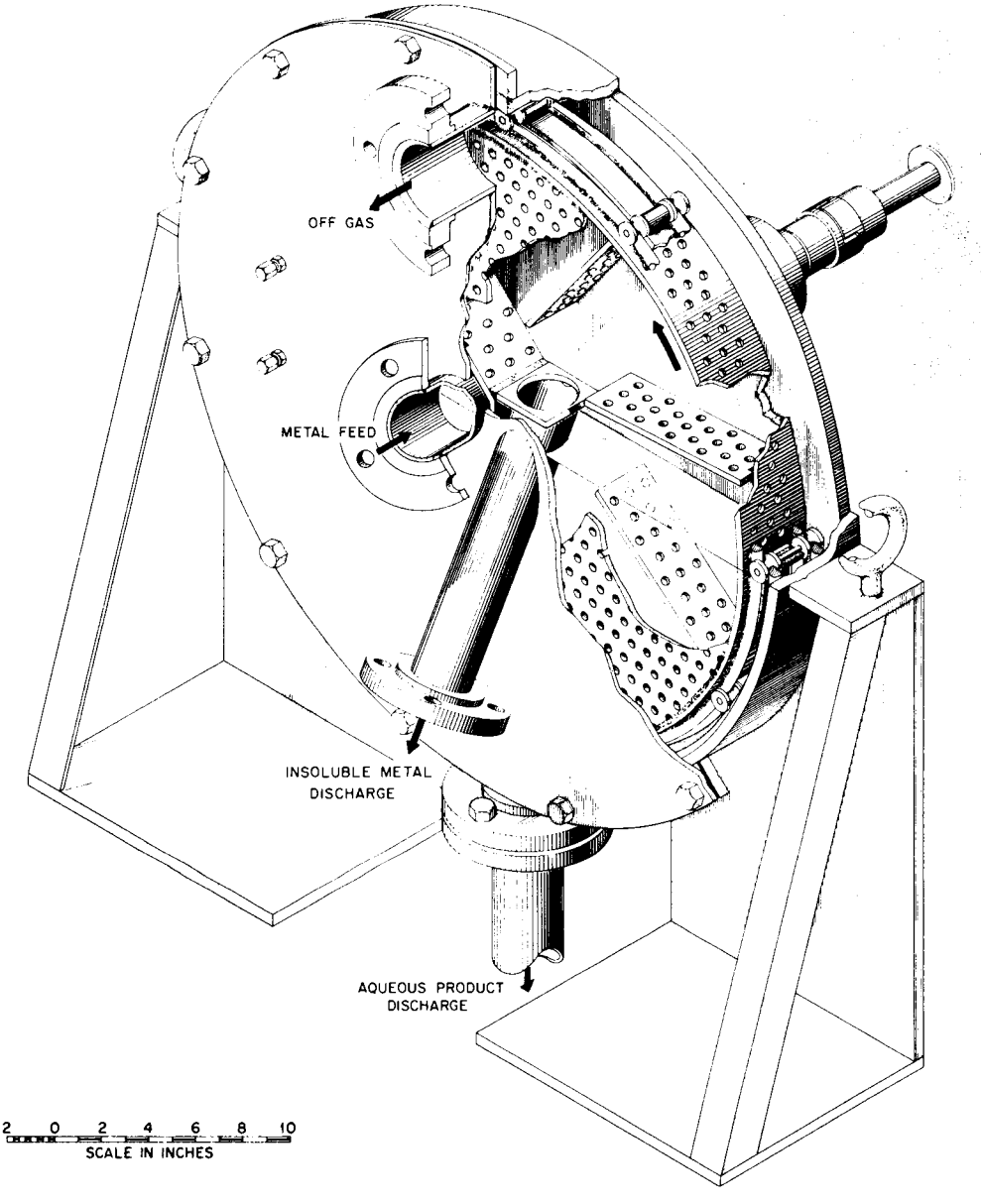

Fig. 4. Rotary-Slab Continuous Dissolver.

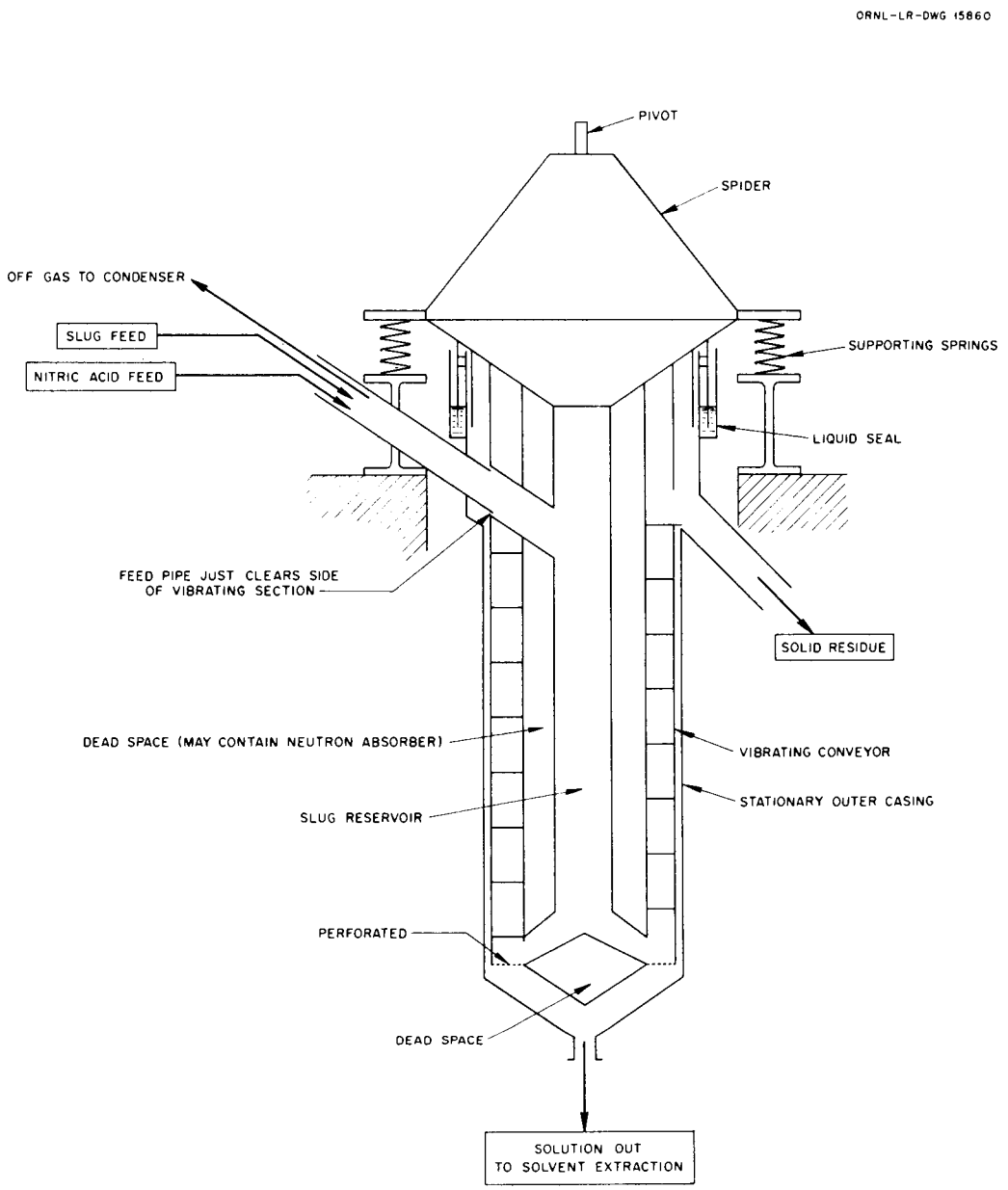

Fig. 5. Continuous Vibrating-Spiral-Tray Leacher.

3.2 ORNL Dissolvers for Sheared Fuel

A bench-scale batch leacher with a capacity of 10 liters (see Fig. 6) was tested extensively to obtain valuable dissolution rate data for the processing of unirradiated UO_2 and UO_2-ThO_2 fuels.[2,14] The agitation devices are shown in Fig. 7. The fuel was held within a perforated basket, several types of which are depicted in Fig. 8. The dissolvent circulated vertically upward through the basket from an air-sparged draft tube to a vapor-liquid separator, from which it returned to the bottom of the unit. Initially, a steel liner contained the fines within the basket; however, shortly after contact with acid, this liner dissolved and released the fines. Various draft tube configurations and basket designs were tested in this unit. Suspension of fines is a basic requirement that must be met. Settled fines can exist as a "mud" that can be very slow to dissolve and can contribute to a criticality problem if the unit is not geometrically safe for solid nuclear materials. The effects of sheared length, recirculation rate, terminal solution composition, and air sparging were noted.

A larger (90-liter capacity) batch leacher was fabricated and tested to confirm the results obtained with the small unit.[2,15] This leacher, shown in Fig. 9, did not have an air sparge to suspend the "fines" but, instead, impinged the recirculating dissolvent on the bottom of the unit in such a way that solids were prevented from settling. Other batch leachers designed at ORNL were of this general type, but were modified for a particular purpose. Examples are the double-side-arm dissolver depicted in Fig. 10 and a modification of the dissolver having a slab-type acid reservoir (Fig. 3), in which baskets are provided to hold the sheared fuel pieces. The modified unit is shown in Fig. 1 as part of an overall processing scheme.[15] It may be possible to utilize certain aspects of these units for use in LMFBR processing; however, primary consideration must be given to nuclear criticality, suspension of fines, and off-gas control in such units. Batch dissolution promotes off-gas surges that generally require oversized treatment facilities.

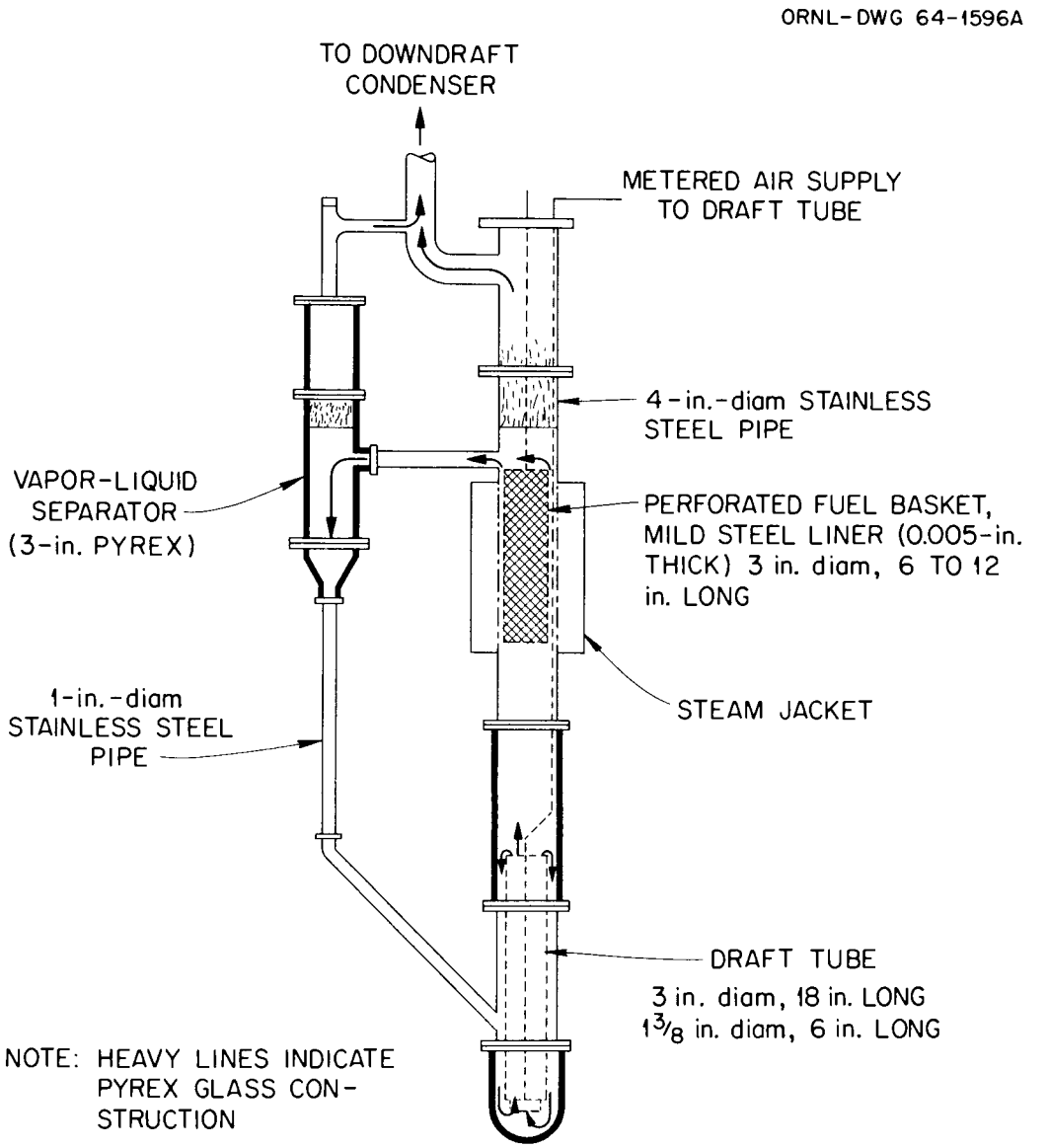

Fig. 6. ORNL Recirculating 10-liter Batch Leacher. (Liquid height, about 4 ft).

ORNL-DWG 64-1595 R1

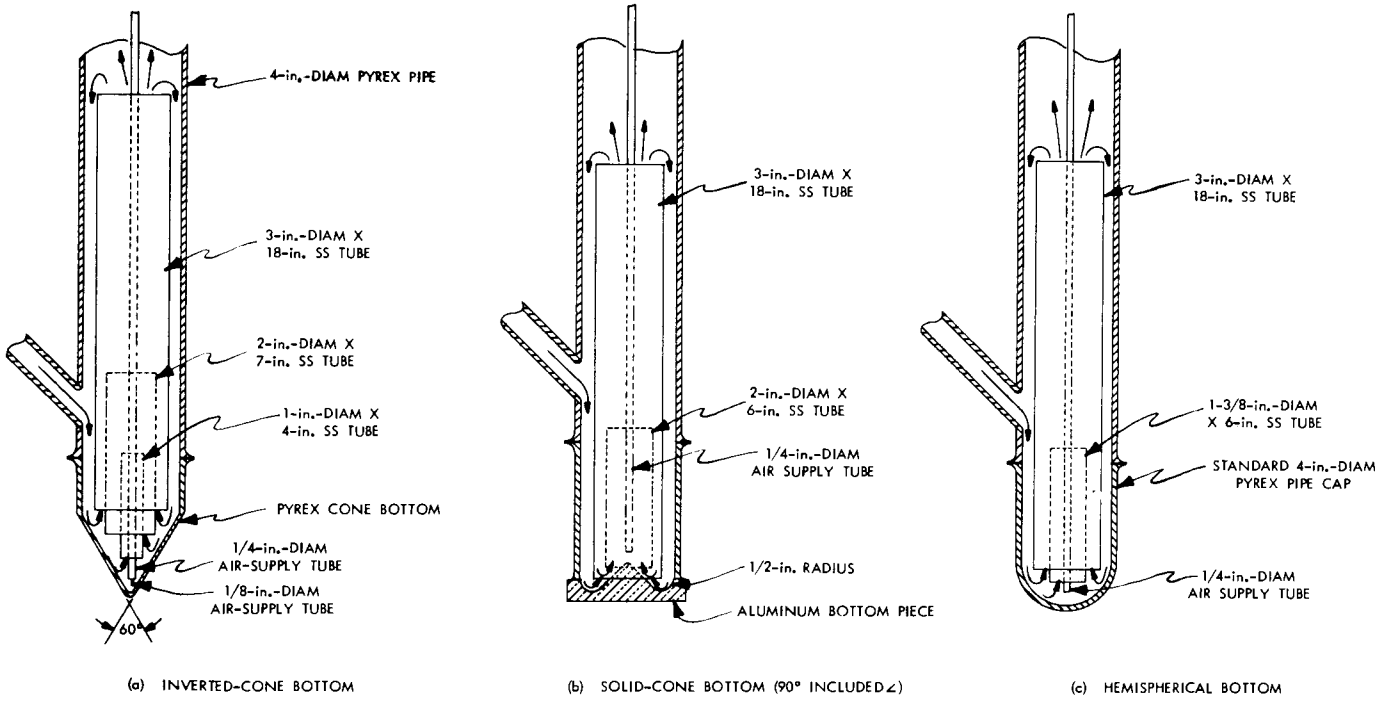

Fig. 7. Agitation Devices for the ORNL Batch Leacher.

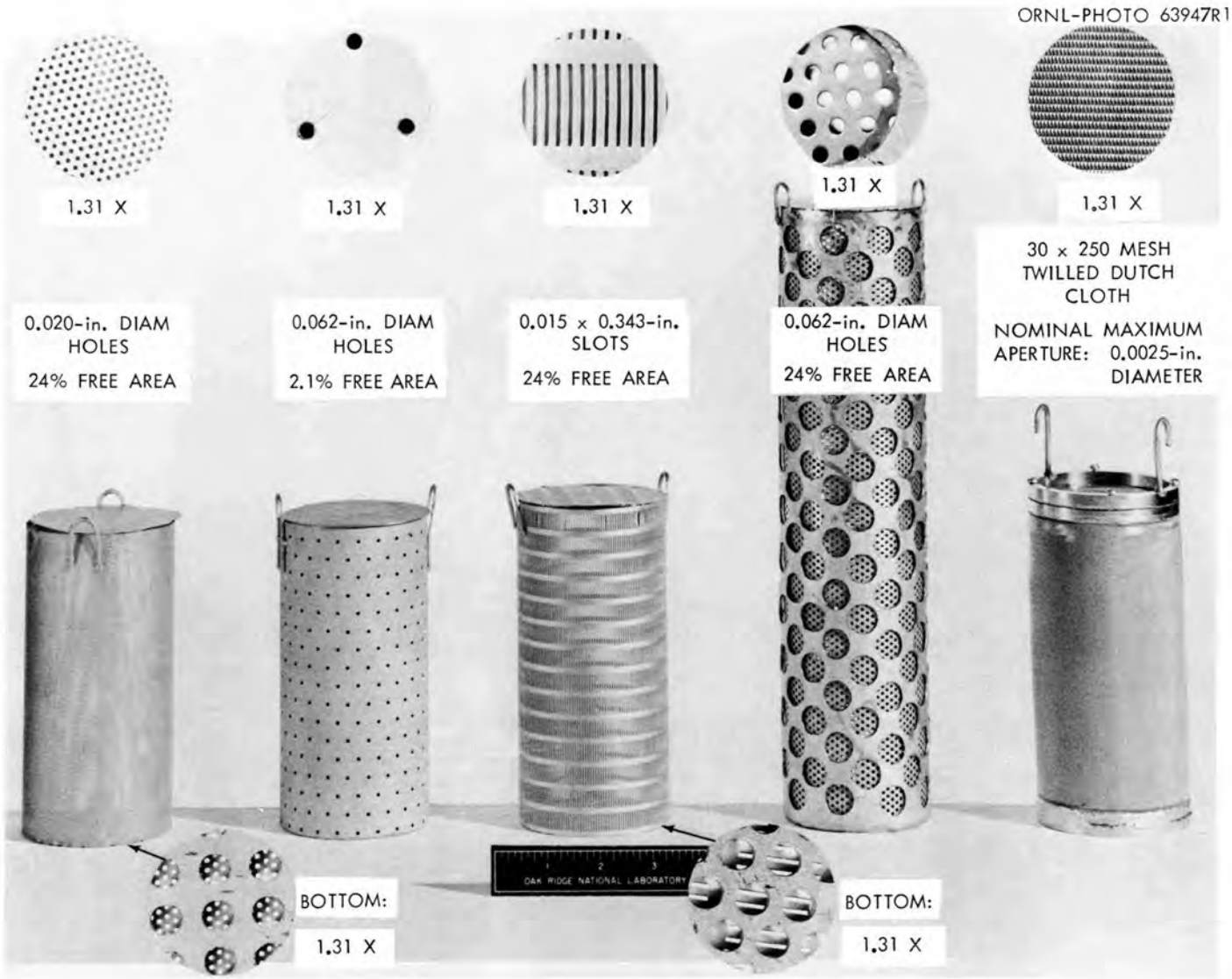

Fig. 8. Perforated Leaching Baskets Used in ORNL Batch Leacher.

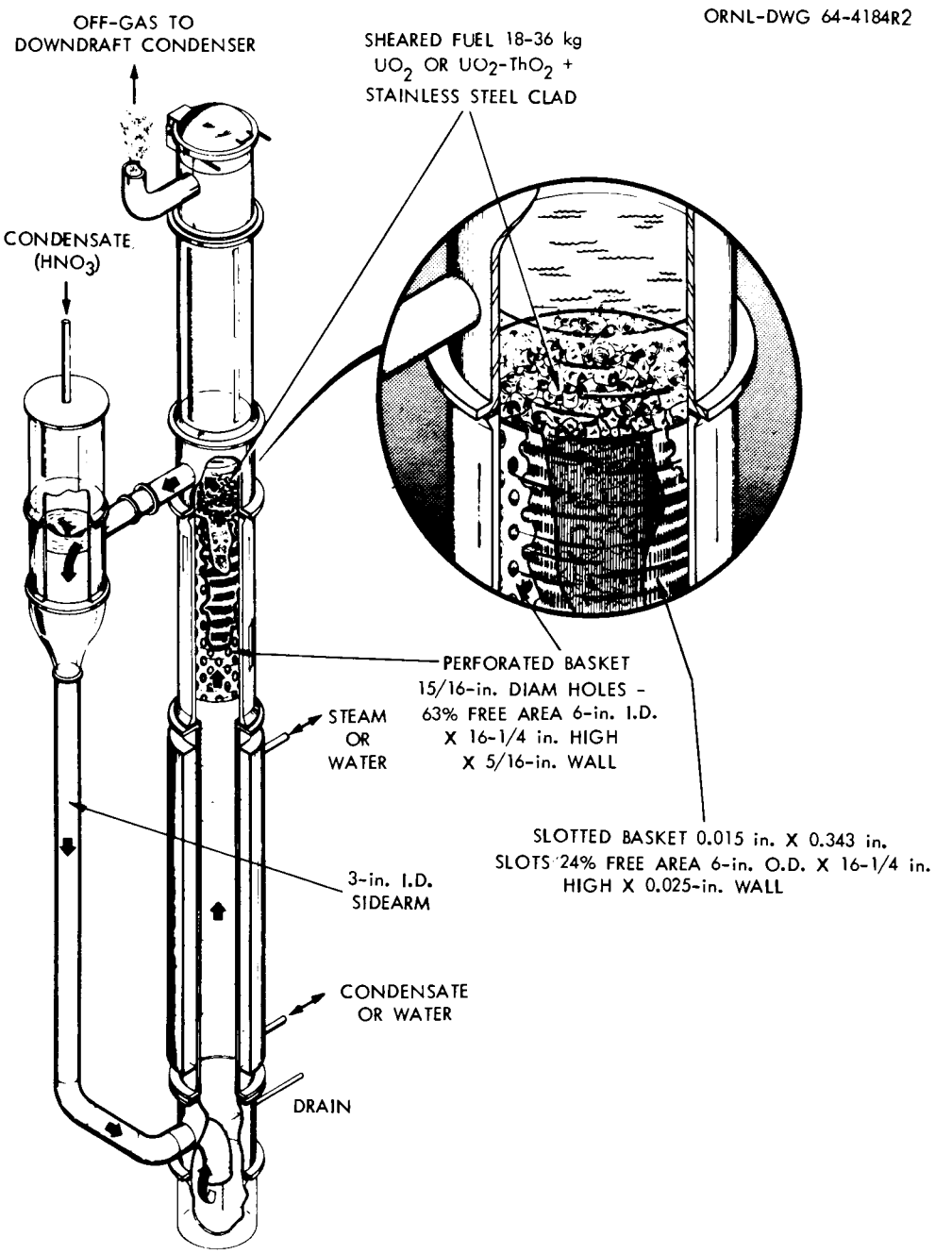

Fig. 9. Engineering-Scale Batch Leacher. Leacher is 9 in. ID by 10 ft high and is constructed of Pyrex and stainless steel. Capacity, 90 liters.

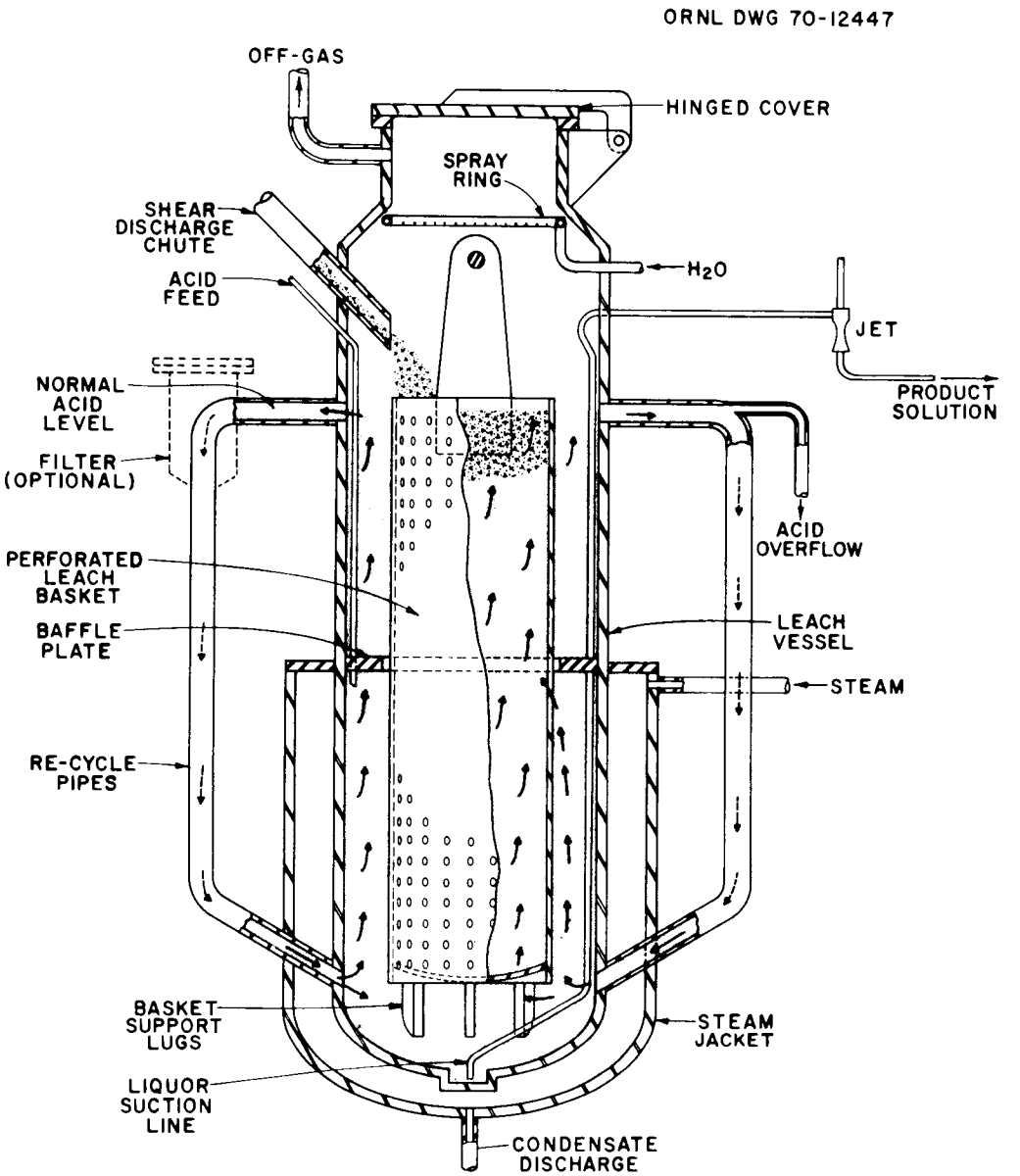

Fig. 10. Double-Sidearm Batch Leacher.

The designs of several continuous dissolvers for sheared fuel were prepared at ORNL.[2,16] A vibrating-tray dissolver is shown in Fig. 11. In this dissolver, the sheared fuel pieces were to vibrate upward against a gentle stream of dissolvent that recirculated from a reservoir (not shown). It would appear that the angle of incline of the tray would be very sensitive to the success of this concept and that, perhaps, the volume of acid within the tray would be marginal for LMFBR processing. This could produce a deficiency of acid and, in turn, the formation of plutonium polymer.[5] However, the concept is a valid one for LMFBR processing; and a unit of this type, with certain modifications, could be constructed and tested. The design favors off-gas collection and criticality control and, by reason of the vibratory motion, provides mixing of fuel and dissolvent.

A vibrating spiral tray describes the working mechanism of a second type of continuous dissolver. This dissolver as applied to unclad or aluminum-clad fuels was described in Sect. 3.1. The unit for use with sheared fuels, shown in Fig. 12, was unsuccessful because of repeated mechanical failure brought on by the vibrations. If this problem could be solved, the vibrating-spiral-tray dissolver would still be a viable concept for LMFBR processing.

A third type of continuous dissolver that has received considerable attention is one featuring positive feeding of the fuel through a tank of dissolvent by using an enclosed spiral, or Archimedes' screw, as shown in Fig. 13.[16,17] As the screw is rotated, the fuel advances through the dissolvent, eventually to be raised out of the liquid region and discharged. The use of perforated areas on the inner drum and baffles on the outer drum enabled the treatment to be zoned into dissolving and rinsing sections. This design probably received more attention than any previous continuous dissolver. A typical unit was operated successfully throughout a large campaign of testing with unirradiated materials and was found to be quite effective for the intended purpose. Its chief disadvantage was the poor heat transfer from the outside vessel wall (jacketed) across a stagnant liquid layer to the wall of the inner, rotating drum. This concept would probably not be effective in the

ORNL DWG 70-12440

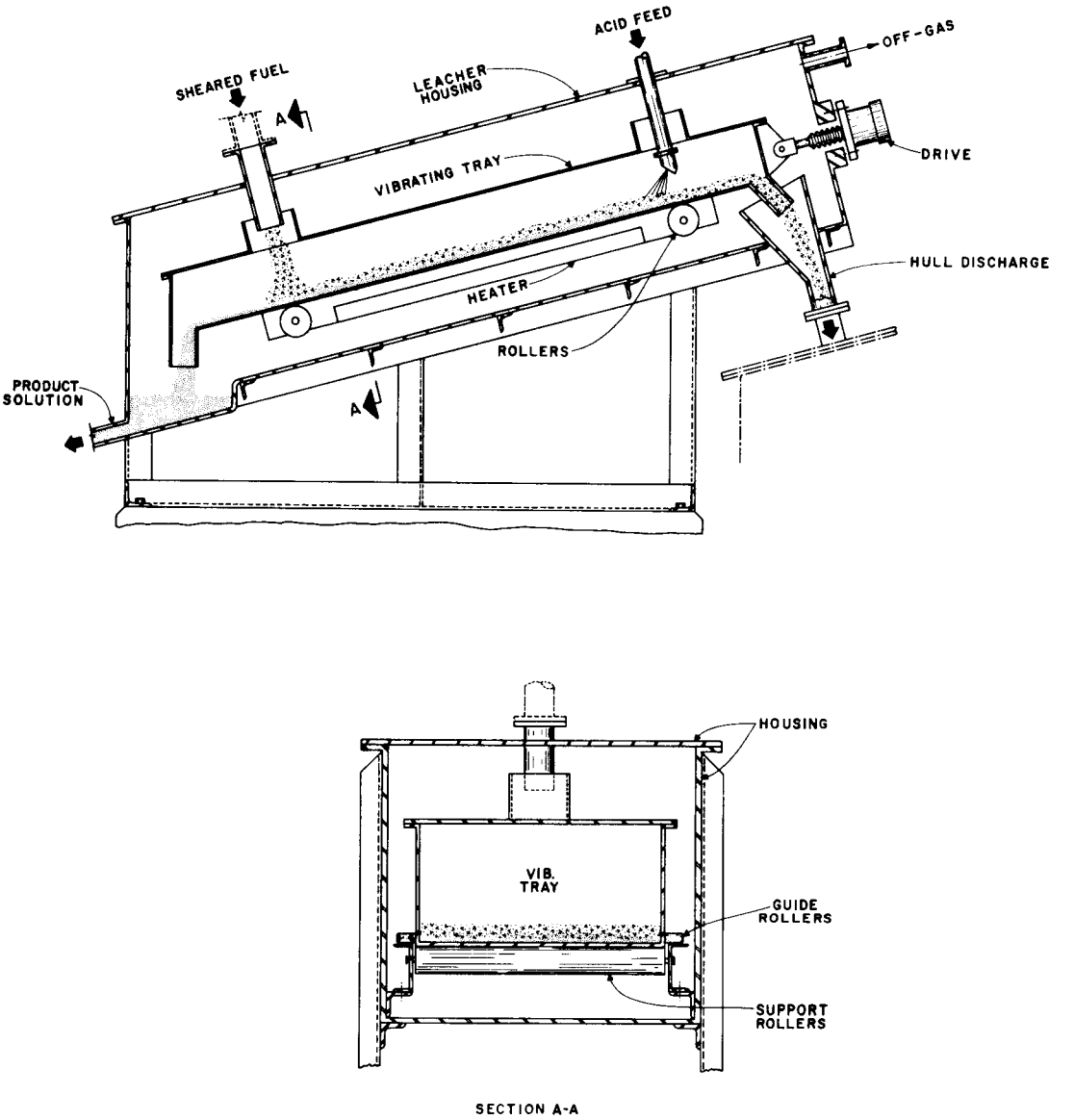

Fig. 11. Continuous Vibrating-Tray Dissolver.

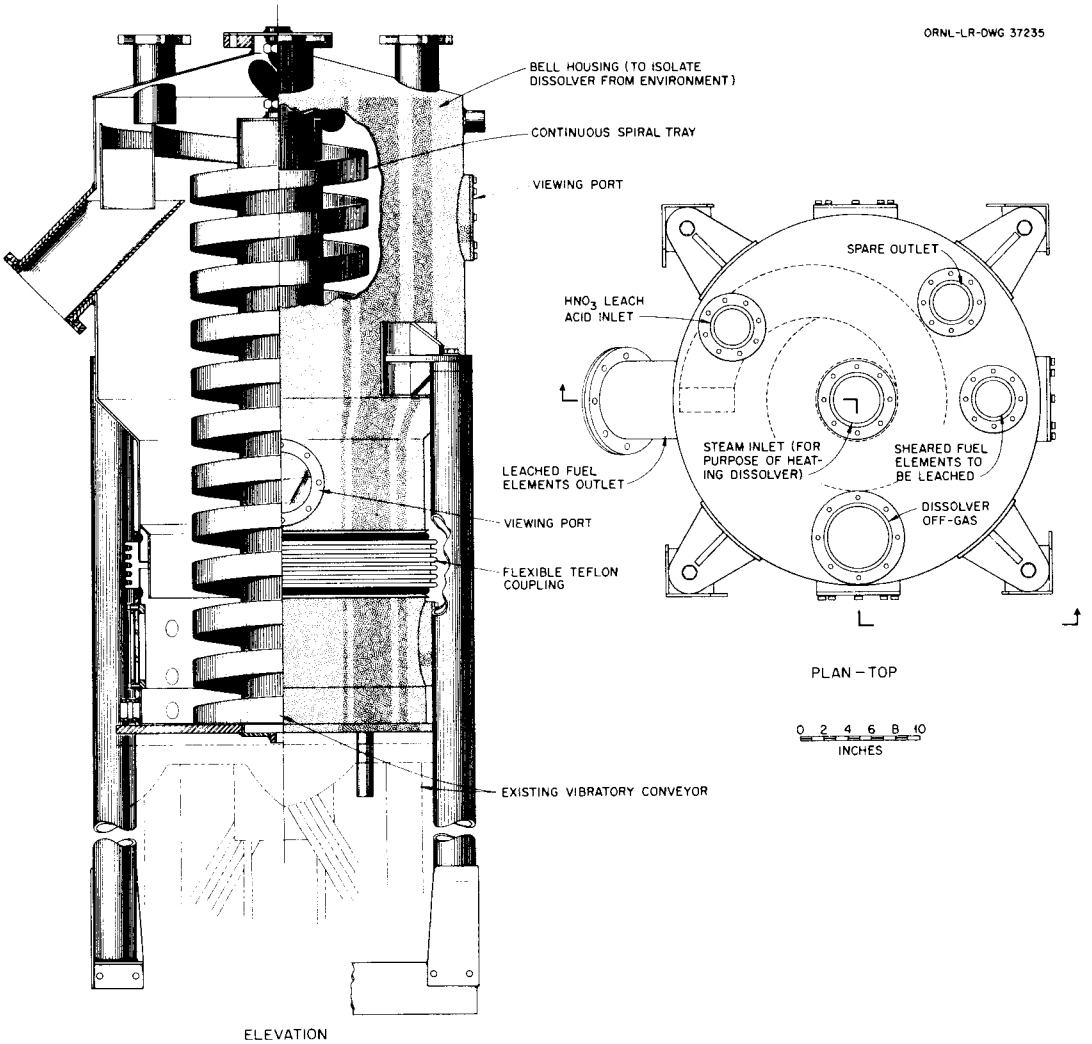

Fig. 12. Continuous Vibrating-Spiral-Tray Dissolver.

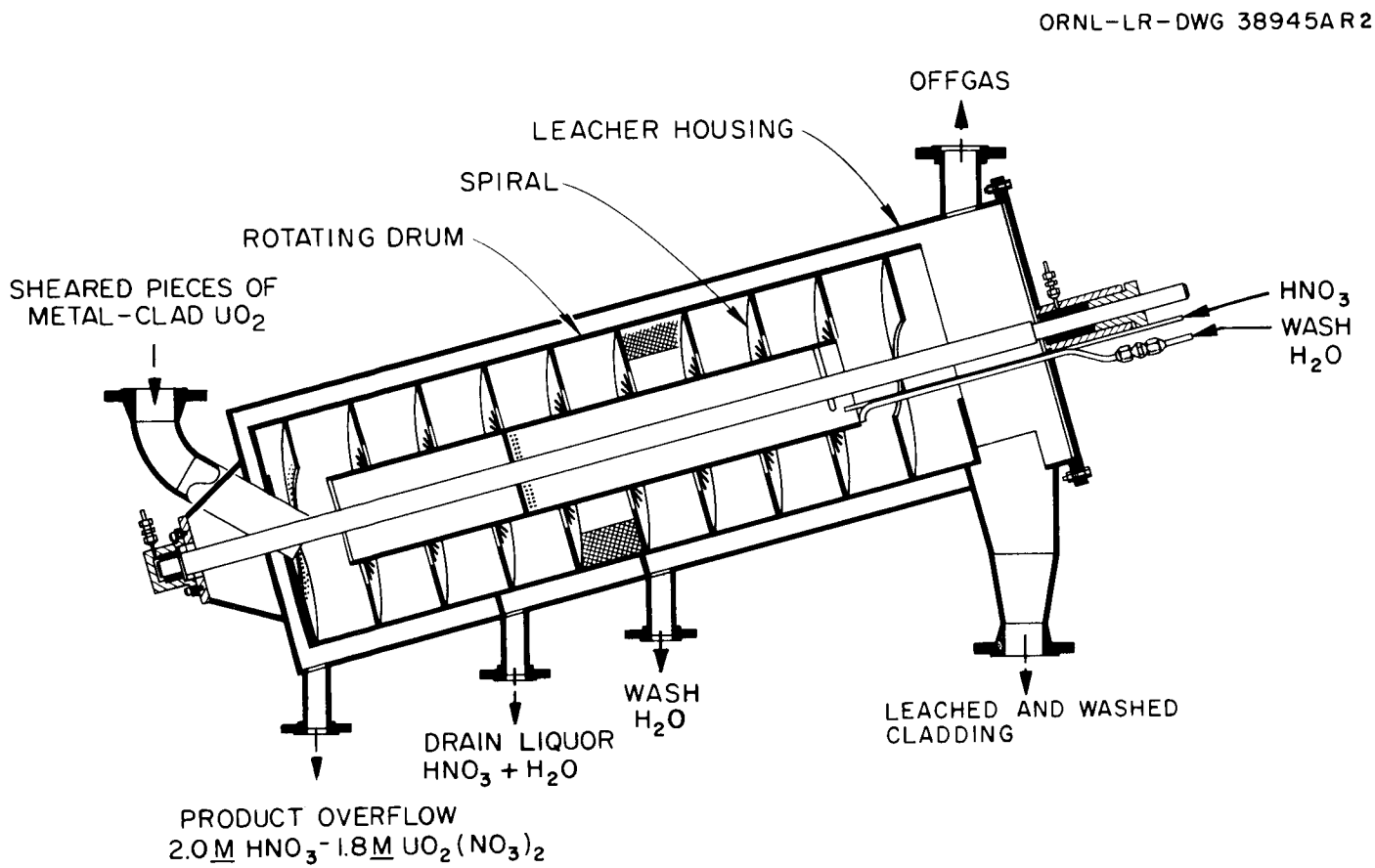

Fig. 13. Continuous Closed-Screw Rotary Leacher.

processing of LMFBR fuel for two reasons. First, efficient removal of heat will probably be a firm requirement. Second, the reaction gases that are produced would have no large vapor space in which to expand; therefore, foaming within the enclosed screw would be troublesome.

Renewed interest in screw-type dissolvers for LMFBR processing has led to designs that represent improvements of the unit described above.[6,18] In one, the screw is not enclosed, thereby allowing dissolvent to circulate freely to the outer wall for heat exchange and also permitting the escape of reaction product and fission gases to an overhead plenum for collection. This unit is shown in Fig. 14. Another design features the use of a perforated sheath for enclosing the screw. The open unit has the disadvantage that small pieces of fuel, cladding, or other material can become lodged between the outer edge of the screw flights and the vessel wall. Enclosing this material within a perforated sheath merely solves one problem and creates another. There is no way to agitate the fines that pass through the perforations. A first attempt to eliminate this difficulty was to specify the addition of a wire brush wrapped spirally around, and fastened to, the perforated sheath; this brush would contact the surface of the vessel wall and serve to transfer the fines. Such an arrangement is actually of limited value, however, since the brush itself would not last long in the dissolver environment unless it was made of very coarse wire. It is desirable to rotate the screw more than a single revolution and then reverse it a few degrees in order to transfer fuel from one flight to another. This action serves to cancel out the resulting angle of repose assumed by the fuel during rotation in a single direction. In addition, oscillation of the screw promotes mixing of fuel and dissolvent. The wire brush approach to removing the fines is not compatible with the oscillatory or reverse rotation modes of operation.

Further improvements in screw-type dissolvers have been made in recent conceptual designs and models; these are described in a later section. None of the continuous dissolvers that have been described above allows separate control over the agitation and the transfer of solids, a feature that would appear to be desirable in a versatile unit.

ORNL DWG 68-4162R

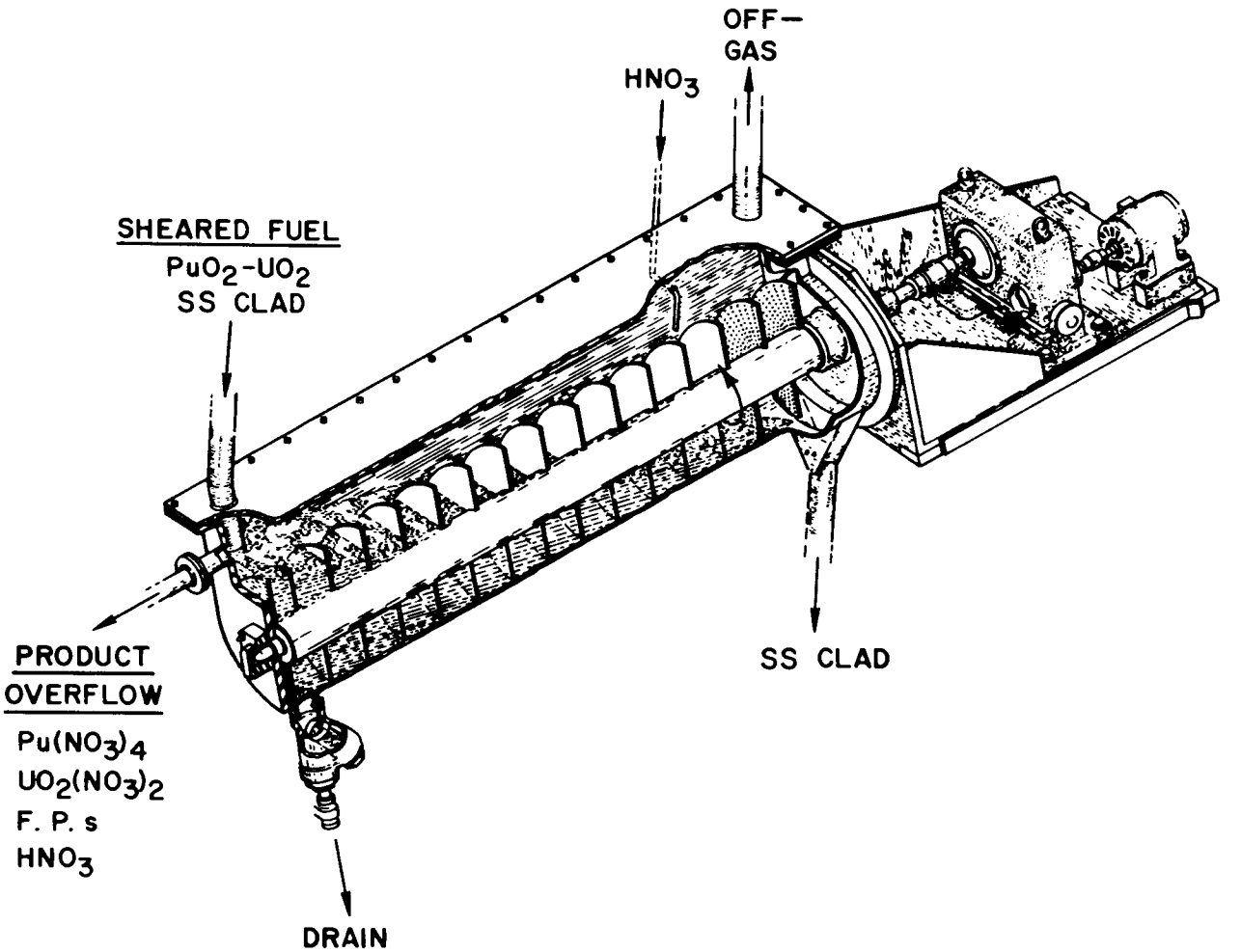

Fig. 14. Continuous, Flooded Rotary Leacher.

3.3 Dissolvers at Other National Laboratories

Fuel dissolution operations performed at the Savannah River Laboratory, Argonne National Laboratory (Idaho Falls), and the Pacific Northwest Laboratory (Hanford) do not employ mechanical shear-leach steps. In general, they follow a batch approach to the chemical dissolution of unclad slugs or to clad or unclad fuel rods.[19] The bulk of the shear-leach technology in the United States originated at ORNL, as outlined above.

Work at Isochem, Inc. (Hanford) and the Phillips Petroleum Company (Idaho Falls) has resulted in the development of two continuous devices for dissolving unclad fuels. At Isochem, a dissolver of always-safe geometry was developed for use with plutonium scrap. The various methods that were studied for maintaining fines in suspension may have a relation to the design of LMFBR fuel dissolvers.[20] Engineers at the Phillips Petroleum Company developed a pulsed column for liquid-solids contact, representing a wide departure from the usual approach to dissolution.[21] This device is not applicable to use with sheared fuel and is mentioned here only for the sake of completeness.

3.4 Dissolvers Employed in Commercial Reprocessing Plants in the United States

3.4.1 Nuclear Fuel Services Plant

At the NFS plant,[4,5,22] the dissolution of conventional LWR fuels in the shear-leach process is carried out batchwise in units, as shown in Fig. 15. After being filled with sheared (∿ 1-in.-long) fuel, each of the six perforated baskets is inserted into the dissolver and subjected to an appropriate dissolution cycle, for example, 20 hr in the case of stainless-steel-clad UO_2 fuels. The baskets are as large as 8 in. in diameter by 7 ft long, and usually contain an acid-consumable liner to retain fines during the loading operation. These baskets fit within the six 10-in.-diam dissolver barrels shown within an 8-ft-diam housing. The concrete core is poisoned for nuclear safety. The liquid volumes required to cover the baskets and the conical top of the core

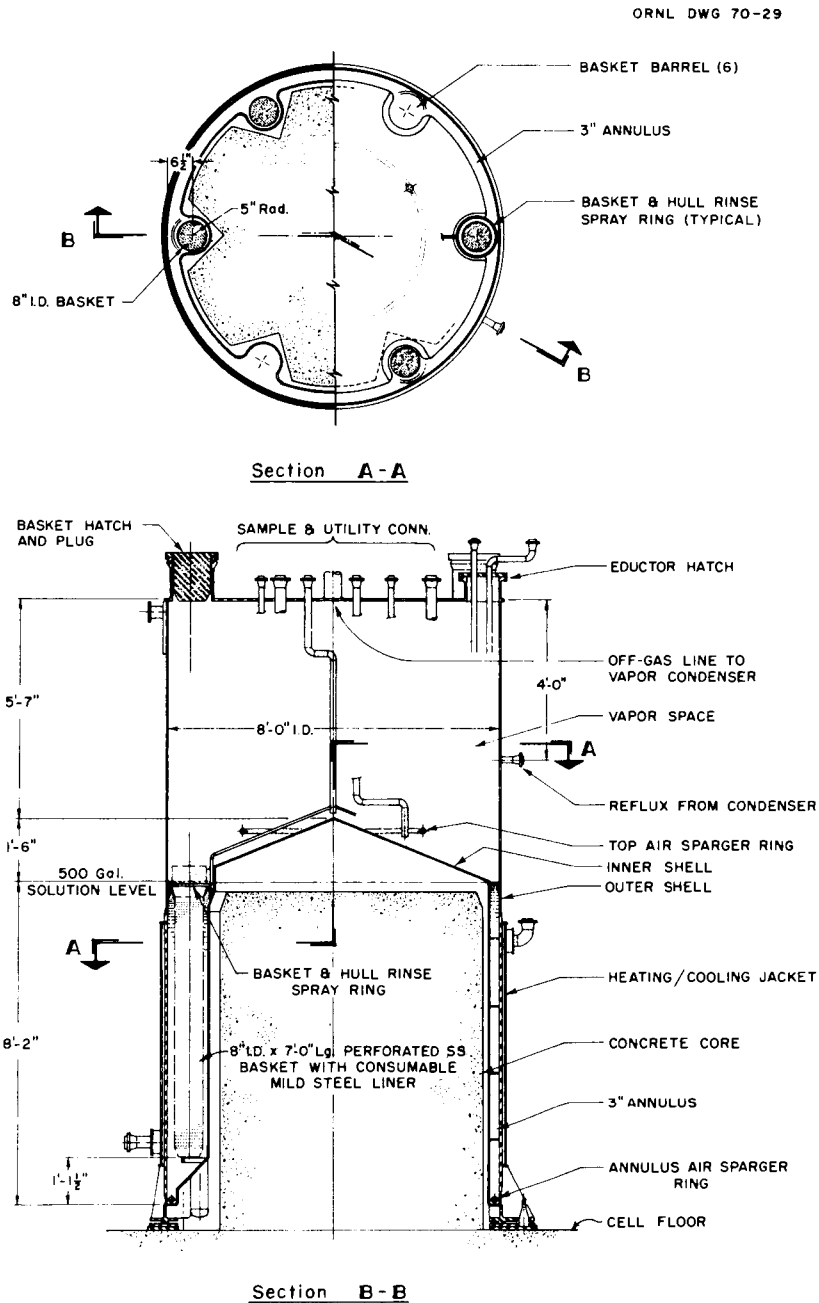

Fig. 15. Batch Dissolver Used at the Nuclear Fuel Services Plant.

are 500 gal and 1000 gal respectively. A large vapor space (100% free board) is left above the liquid. An air sparger below the baskets serves to suspend fines in solution.

The NFS plant has two dissolving units in operation. Each is constructed of stainless steel and has a nominal capacity of 1 ton of UO_2 per day. This capacity is believed to be conservative by a factor of 2 or 3.[23] The present dissolution time cycle of 20 hr includes a safety factor of at least 100% in order to ensure complete dissolution of long (1-1/2- to 3-in.) end pieces that present only one open end to the dissolvent. Plans exist to expand the capacity to approximately 3 tons/day.

The application of the NFS dissolvers to LMFBR fuel processing has been critically examined.[22] In brief, it is concluded that they can be applied to interim LMFBR fuels that have been cooled for 1 year, providing soluble nuclear poisons are added to the dissolvent and the absence of sodium can be guaranteed.

3.4.2 Midwest Fuel Recovery Plant

The Midwest Fuel Recovery Plant (General Electric Company, Morris, Illinois), which is now under construction, will use the proprietary Aquafluor process, which includes a shear-leach head-end step.[22,24,25] Chopped 3-in. segments of LWR fuels will be dissolved at the rate of about 1 ton/day in a totally enclosed, horizontal-slab, vibrated trough dissolver of critically safe geometry (see Fig. 16). The vibratory action of the dissolver helps distribute fuel uniformly across the trough and conveys fuel pieces through the hot dissolvent. The stainless steel trough is about 18 in. wide by 10 ft long and contains solution at the depth of 4 in. The acid solution recirculates through the trough from a reservoir. Leached hulls fall into a water-filled tray, which feeds a vertical vibratory conveyor. The water serves both as a final rinse and as a gas seal. Insoluble fines are not conveyed; instead, they are collected for intermittent removal from the system. The unit is designed to provide a dissolution time sufficient to dissolve all UO_2 on a once-through basis. Since the plant is still under construction, operational reliability of this leacher has not

ORNL DWG. 70-12441

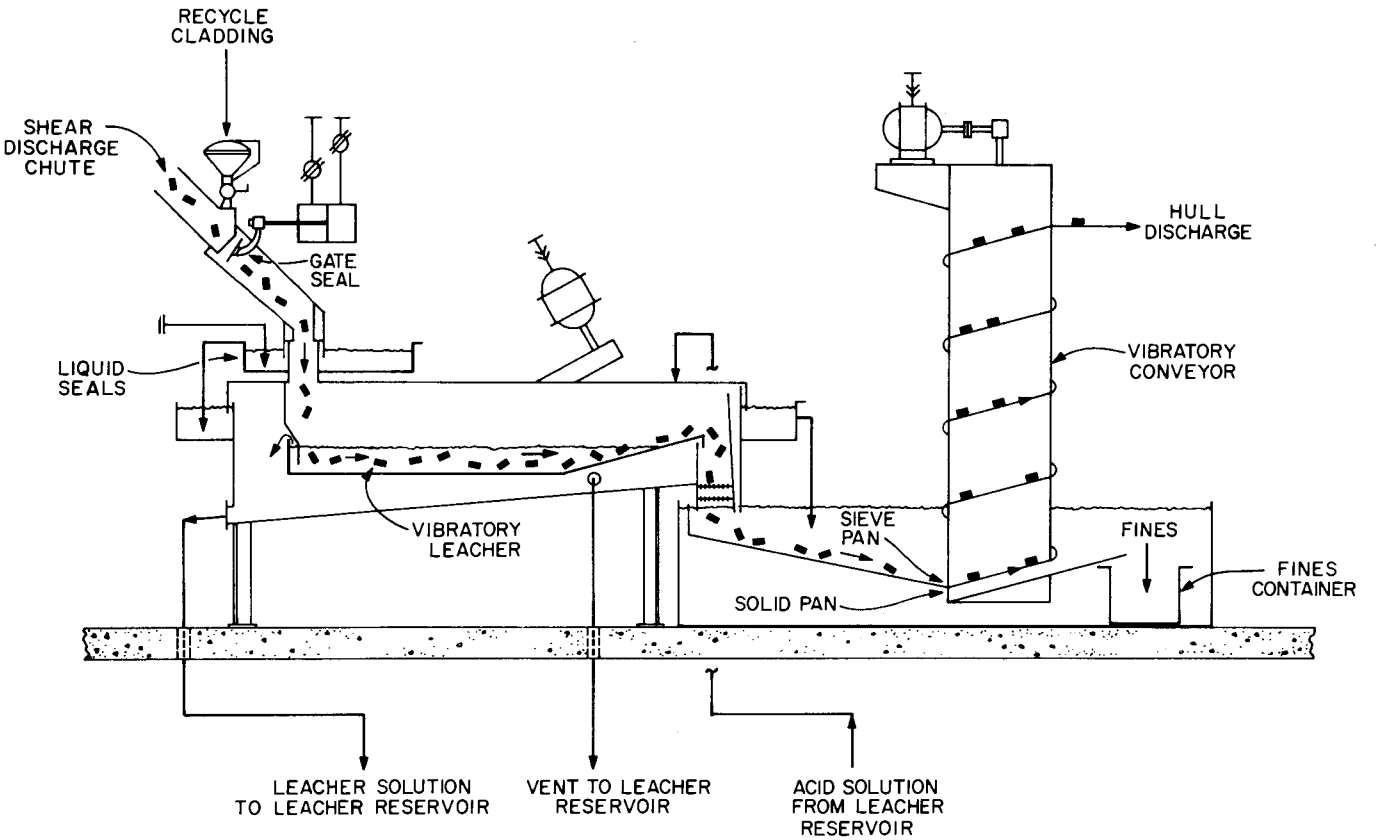

Fig. 16. Continuous Leacher and Cladding Conveyor to Be Used at the Midwest Fuel Recovery Plant.

been confirmed. However, it does appear to be a valid concept for LMFBR fuels and represents an improvement over the continuous vibrating-tray dissolver shown in Fig. 11.

3.4.3 Barnwell Nuclear Fuel Plant

The Allied Chemical Corporation* has proposed to construct a 5- to 7-ton/day reprocessing plant at Barnwell, South Carolina. This plant will utilize the shear-leach process, with semicontinuous dissolution of LWR fuel.[22,26-28] The sheared fuel (1- to 5-in. lengths) will fall (via some type of gas sealing mechanism) directly into a 30-in.-diam basket-type stainless steel dissolver containing dissolvent (see Fig. 17). Thus, dissolution of the fuel will occur while the basket is being filled. When the basket is full of fuel segments, newly sheared fuel will be diverted to another unit; dissolution will continue in the first unit until the last piece that was added has contacted the acid for a sufficiently long period for dissolution of the core material to be complete. This procedure minimizes off-gas surges by regulating the reaction rate. A soluble nuclear poison would be added to both the dissolver contents and the cooling jacket for nuclear safety. It is estimated that filling a basket would take about 3-1/2 hr, while an additional 3 to 4 hr would be required for final dissolution. An acid wash is to be used prior to the final water rinse and hull removal. The acid wash would then be used as the initial dissolvent for the succeeding basket of fuel. Although complete analysis of this dissolver with regard to LMFBR fuel has not been made, the concept of semicontinuous dissolution is certainly valid for LMFBR fuel. Nuclear safety analyses would possibly restrict basket dimensions for application to LMFBR fuels, thus requiring the use of multiple baskets to attain capacity.

3.4.4 Preliminary Designs for Other Plants

The Atlantic Richfield Company (ARCO) reportedly has plans for a large (5-ton/day) reprocessing plant to be located near Leeds, South

---

*Recently entered into a partnership with Gulf Energy and Environmental Systems, Inc., a division of Gulf Oil Corporation.

ORNL DWG 70-12437

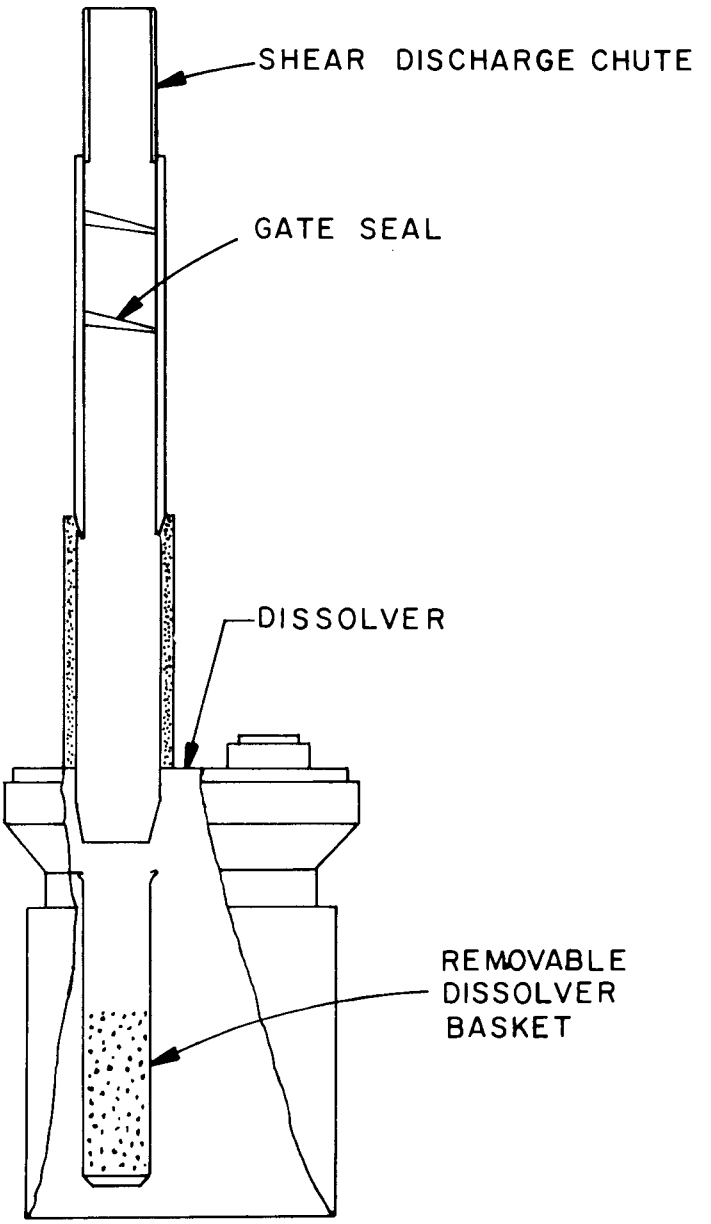

Fig. 17. Semicontinuous Dissolver for Use at the Barnwell Nuclear Fuel Plant.

Carolina.[22,29] The fuel is to be dissolved after being sheared, but details of the method and the equipment to be used are not available at this time.

The National Lead Company has also expressed an interest in the nuclear fuel processing business and, according to reports, will incorporate a shear-leach head-end step in its designs.[30]

3.5 Dissolvers in Use at Foreign Reprocessing Plants

3.5.1 Eurochemic Facility

Fuel dissolution at Europe's first reprocessing plant, the Eurochemic facility at Mol, Belgium (capacity, 100 tons per year), is performed via the chemical decladding (Zirflex, Sulfex) method.[31-33] Although the two installed dissolvers perform the tasks of both decladding and dissolving the fuel, they closely resemble batch dissolvers for sheared fuel, even to the extent that the fuel material is held within baskets for transport from the storage area to the dissolver and for containment of fines during dissolution. Considerations as to off-gas control and fines suspension are similar to those given when sheared fuel is dissolved.

The Eurochemic dissolvers are constructed of a corrosion-resistant alloy (Nionel) in such a manner that they are critically safe for low-enrichment fuels when "poisoned" inserts are used. The cylindrical dissolver (Fig. 18) is 30 cm (∿ 12 in.) in diameter by about 5 m (16 ft) long in the fuel-containing section, and communicates with an annular acid reservoir. The other dissolver (Fig. 19) accommodates rectangular fuels in three tubes that are 273 by 343 cm (∿ 11 by 13 in.) in cross section and about as long as the cylindrical dissolver. These tubes are interconnected via slab-type geometry as an acid reservoir. In the future, Eurochemic plans to alter its process in favor of some form of mechanical dejacketing, lixiviation/melting, or shearing so that waste expenses incurred by dissolution of cladding can be reduced. Many features of the Eurochemic dissolvers warrant attention with regard to extension to batch dissolution of LMFBR fuels. In particular, the

ORNL DWG 70-12448

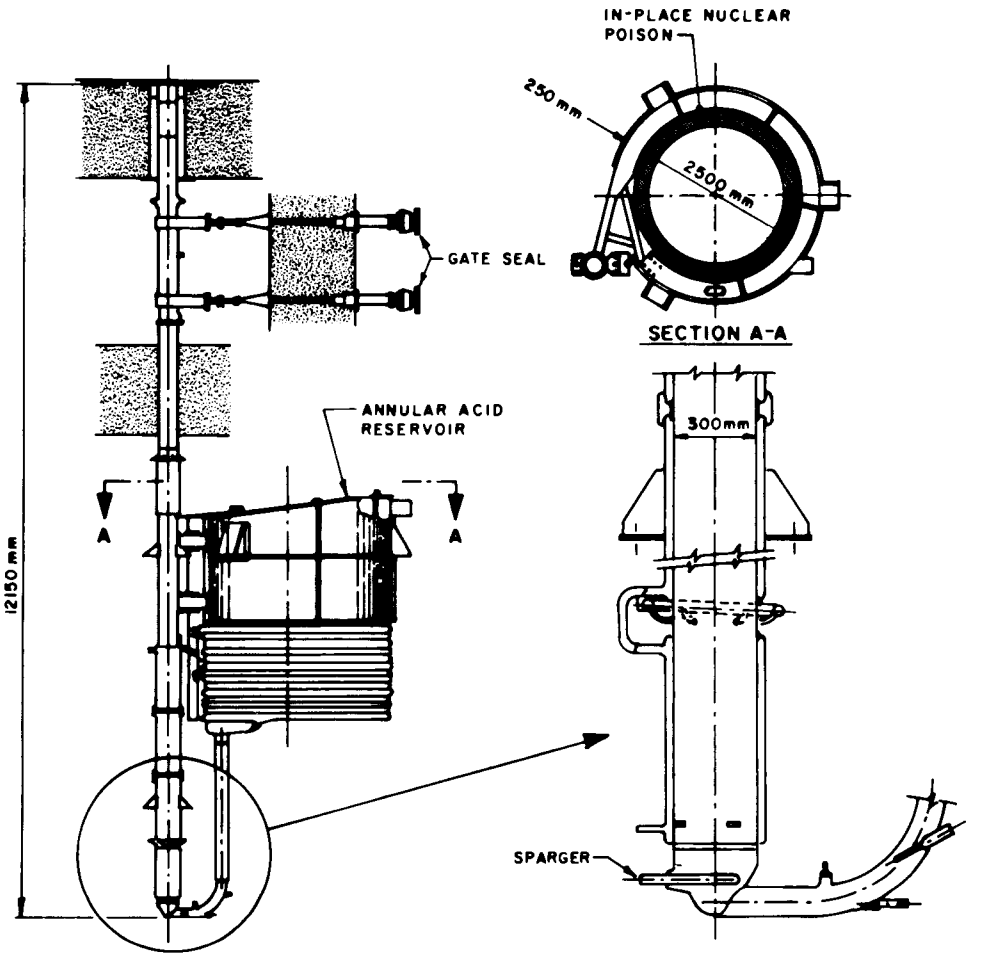

Fig. 18. Cylindrical Dissolver Used at the Eurochemic Facility.

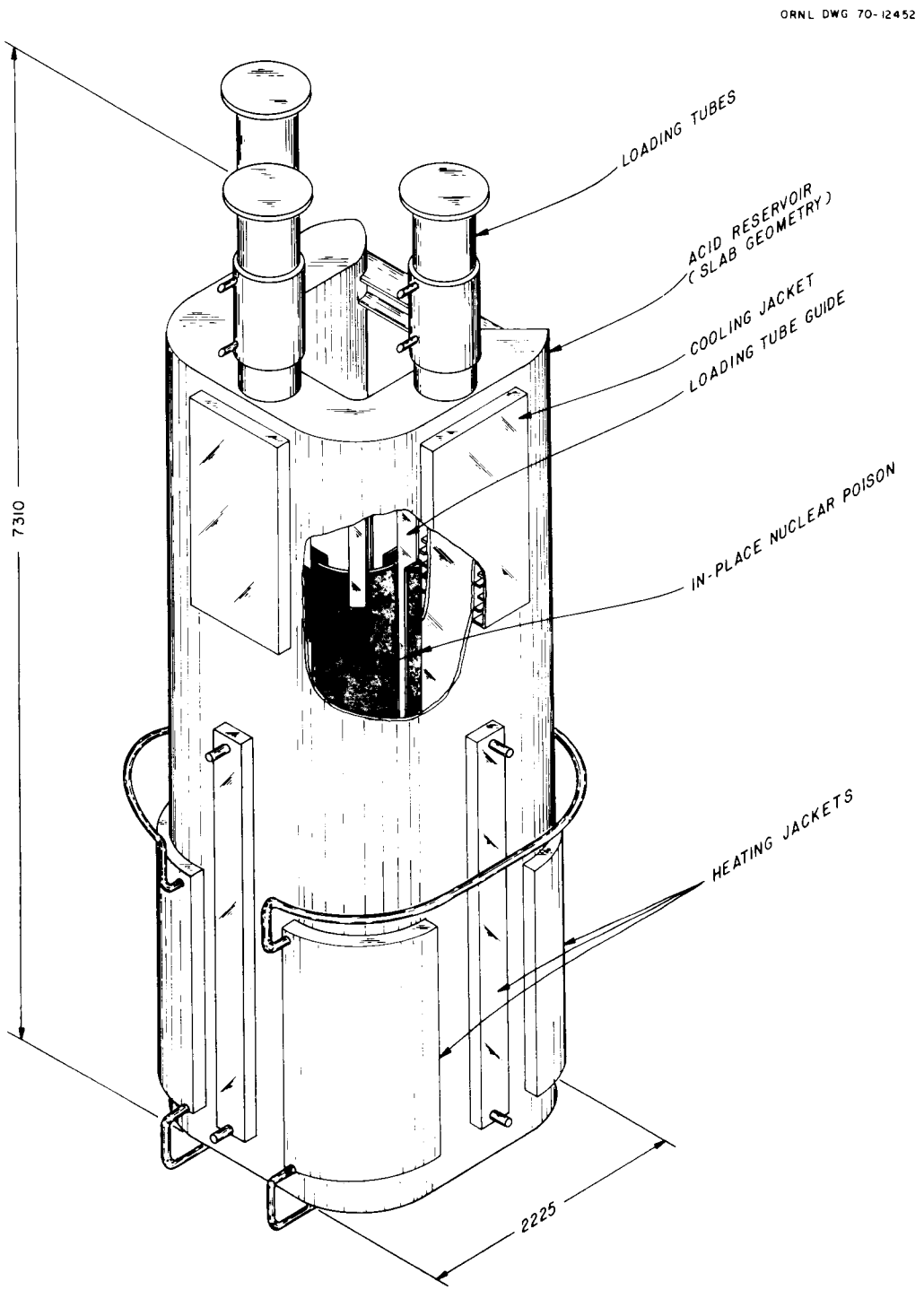

Fig. 19. Slab-Geometry Dissolver Used at the Eurochemic Facility.

mechanical-design aspects of the dissolvers and of the fixed nuclear poisons are interesting and merit study for possible application to LMFBR fuel processing.

3.5.2. Reprocessing Facilities in the United Kingdom

The first Windscale Plant, Sellafield, England, used a chemical decladding-dissolution process. The new 1500-ton/year plant features a mechanical decladding process with continuous dissolution.[33-36] The stainless steel pot-type dissolvers accept entire fuel rods from the dejacketing operation and operate with a fumeless dissolution technique, re-forming nitric acid by scrubbing the nitrogen oxide fumes and added oxygen with incoming acid. No baskets are used since no inert metal materials accompany the fuel. While this equipment performs quite satisfactorily for the purpose intended, it has little application to the dissolution of sheared fuel.

Research at Harwell has brought about the development of a dissolver in which sheared fuel pieces fall into a tube (2.5 or 3 in. in diameter) for contact with the recirculating dissolvent.[37] Hulls are continuously removed from the bottom of the tube either by a vibratory (pulsed-ladder) technique or by air lift.[38] The generation of off-gases during LMFBR fuel processing could cause foaming problems in this type of unit. Also, the solids-lifting devices might not function properly for the variety of shapes and sizes of inert-metal solids that must be handled in an LMFBR application.

At Dounreay, a chemical decladding process has been used extensively on a pilot-plant scale. Fuels clad with difficult-to-dissolve materials are reduced in size with a milling technique prior to dissolution. After dissolution in a batch pot or U-tube dissolver of safe geometry, the metal chips are washed, dried, and removed pneumatically.[39,40]

3.5.3 Scandinavian Reprocessing Facility

The Norwegian-Dutch reprocessing pilot plant at Kjeller, Norway, uses a chemical decladding process. It offers no new features that might have application to LMFBR fuel processing.[33]

3.5.4 Reprocessing Plants in France

At Marcoule and La Hague, the French maintain production-scale facilities that utilize batch and continuous dissolution techniques for reprocessing approximately 900 tons of fuel annually.[41,42] The shear-leach process development is carried out at La Hague and Fontenay-aux-Roses.[43] New head-end equipment, such as shears and dissolvers, for projected LMFBR fuels is being designed, and the continuous method for dissolving sheared fuels is planned. Published concepts include a continuous baffled drum dissolver (cement mixer design) (Fig. 20),[44] and a semicontinuous dissolver (Fig. 21) having a slab-type acid reservoir and two dissolution baskets. The baffled drum design, which is completely new, appears to offer efficient mixing and simplified off-gas collection. It would appear to be a worthwhile concept to investigate for use in LMFBR fuel processing (see Sect. 3.6).

3.5.5 Reprocessing Plants in Germany

At Karlsruhe, the WAK plant employs a shear-leach head-end process in which batch dissolution takes place in baskets. The baskets fit within a 9-in.-diam tube supplied with dissolvent from a 6.5-in.-thick slab-type reservoir.[45-48] This arrangement is similar to other batch vessels described earlier.

3.5.6 Reprocessing Plants in Italy

The EUREX and PCUT plants in Italy are pilot facilities using chemical decanning methods.[49] The shear-leach process is used at the ITREC plant, which is designed for a throughput of 30 kg of U-Th fuel per day.[50] The fuel is dissolved batchwise, using a basket to contain the hulls. The large (1000-ton/year) plant planned at Sallugia will reportedly also use the shear-leach process.[51]

3.5.7 Reprocessing Plants in India

The 100-ton/year reprocessing plant at Trombay, India, utilizes the chemical-decladding head-end process and performs both decladding and fuel dissolution in a horizontal dissolver that is 900 mm (∿ 35 in.) in diameter by 4.5 m (∿ 15 ft) long and made of stainless steel.[52]

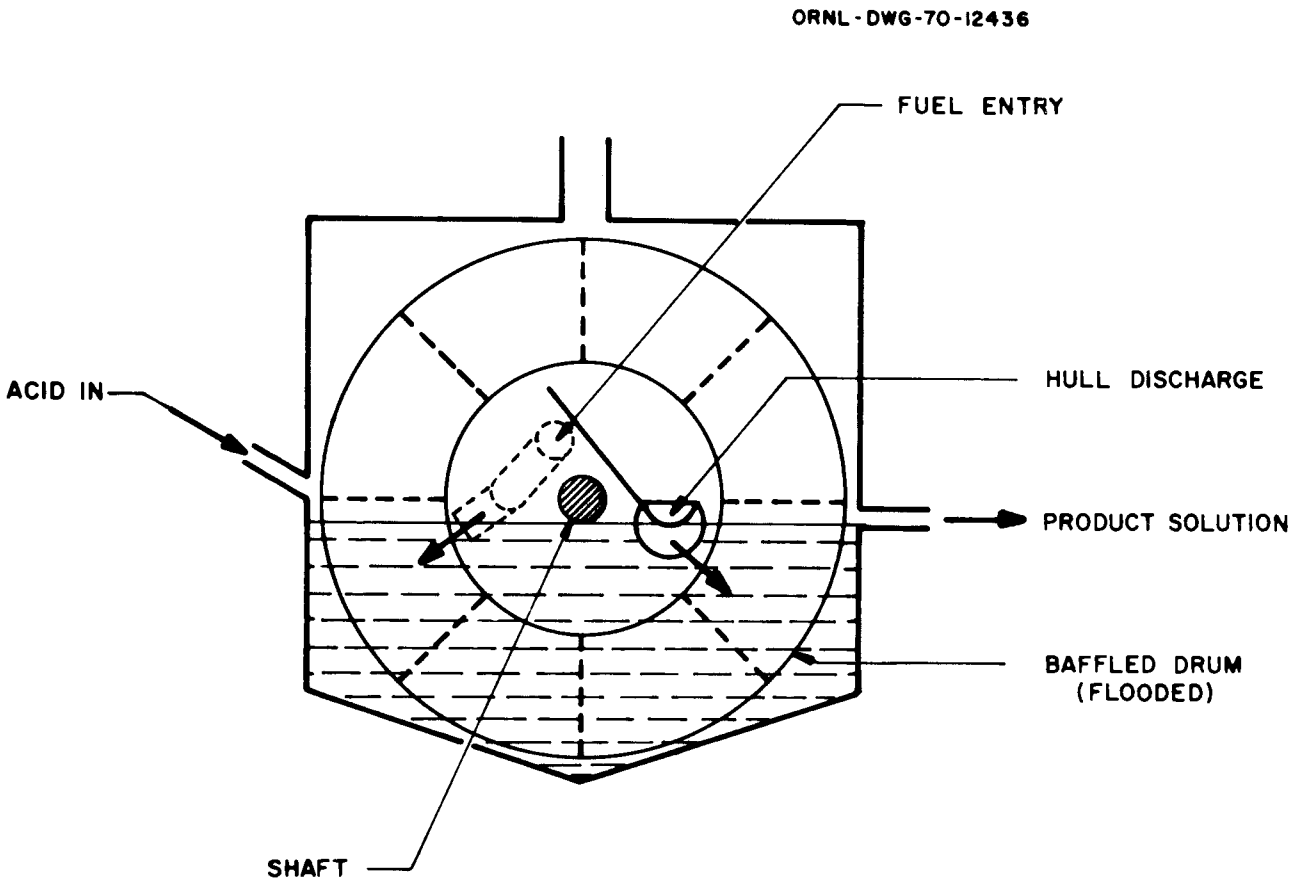

Fig. 20. Continuous Dissolver Used by the French.

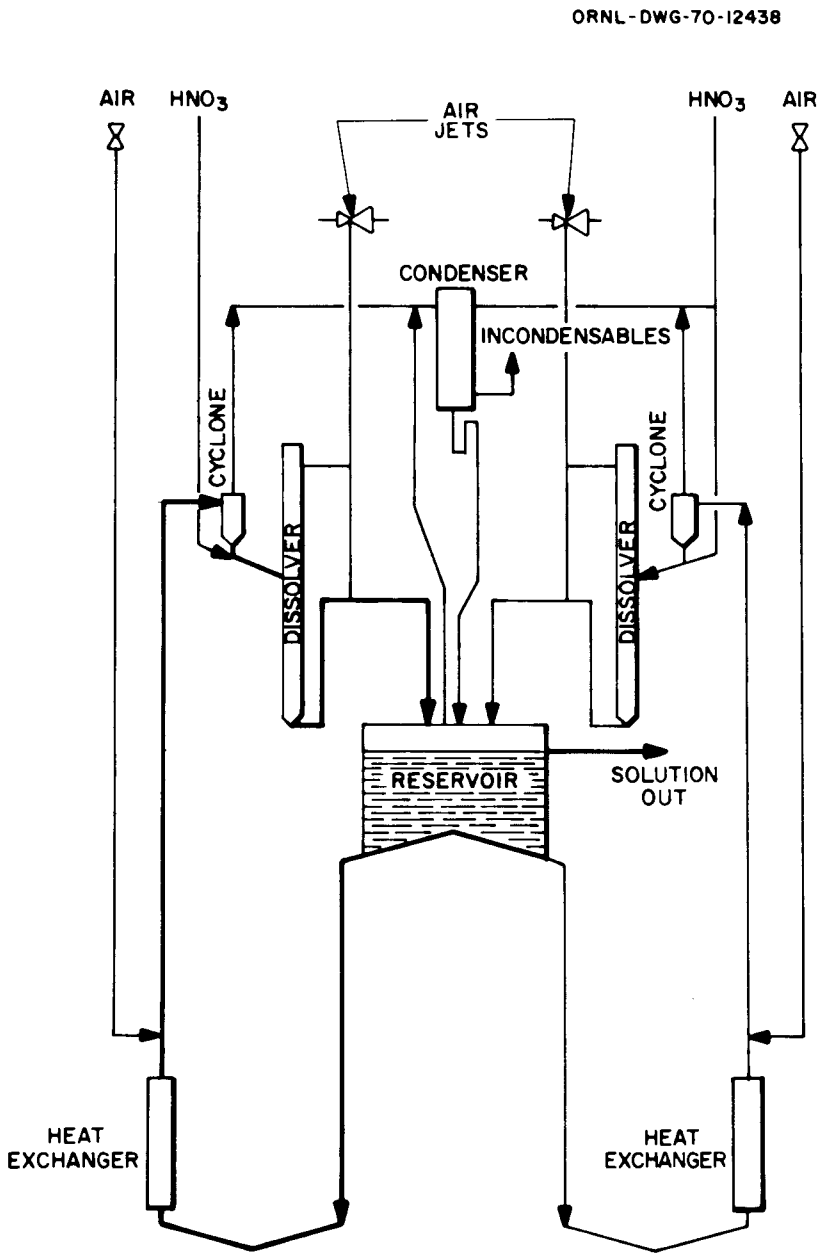

Fig. 21. Semicontinuous Dissolver Used by the French.

The fumeless dissolution approach used at Windscale is also used here. The 300-ton/year plant planned for Tarrapu, India, is expected to utilize the shear-leach process.

3.5.8 Reprocessing Plant in Japan

A 200-ton/year reprocessing plant under construction at Tokai-Mura, Japan, will use the chop-leach process developed at ORNL.[53,54] Each of the dissolvers in this plant will be of the batch type and will have two perforated baskets inserted in cavities that are interconnected via slab-type geometry, similar to that described previously and shown in Fig. 10.

3.5.9 Nuclear Fuel Reprocessing in the U.S.S.R.

Mechanical head-end steps are being developed in the U.S.S.R. The West-Bendli plant presently uses mechanical chopping and batch dissolvers containing baskets. A U-tube dissolver featuring pneumatic removal of cladding is presently under study. The advantages of continuous equipment for large future processing operations have been cited.[55]

3.6 Summary of Dissolver Survey

Our survey of dissolver equipment currently employed in all major U.S. and foreign nuclear energy establishments indicates that no dissolution device suitable for use with short-cooled LMFBR fuel yet exists. Other recent surveys of fuel reprocessing do not offer conflicting evidence.[56,57] However, various features of existing equipment and various conceptual designs do have merit for LMFBR processing and should be exploited.

4. NEW DISSOLVER CONCEPTS AND MODELS

Eight concepts for continuous dissolvers have been formulated as part of the overall program to assess the magnitude of technical problems that arise when the aqueous method is applied to the processing of LMFBR fuels. One-fourth-scale models (Figs. 22-30) have been built to demonstrate each of these concepts. These are operating models that

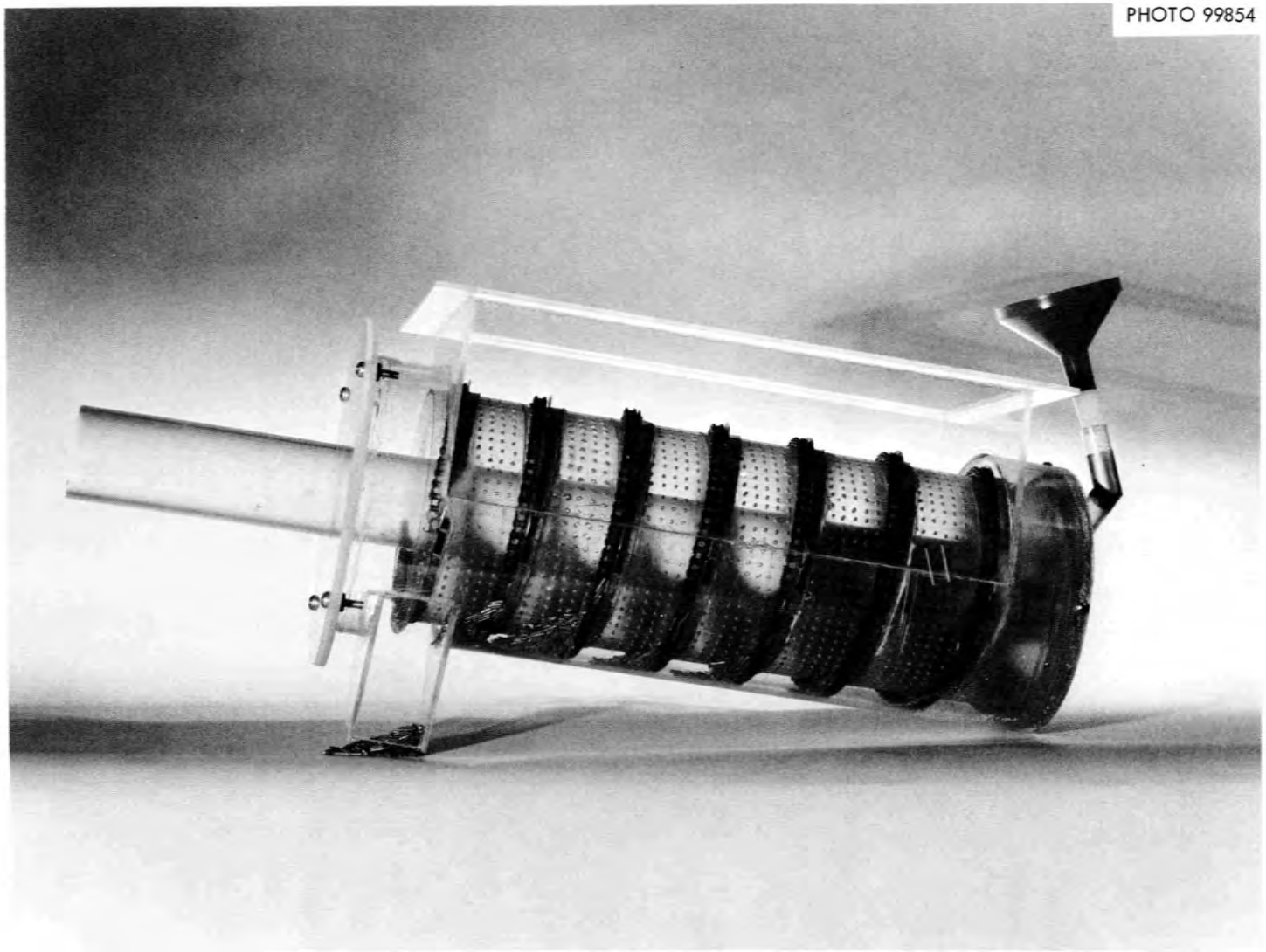

Fig. 22. Model 1 - Spiral Screw, Mark I.

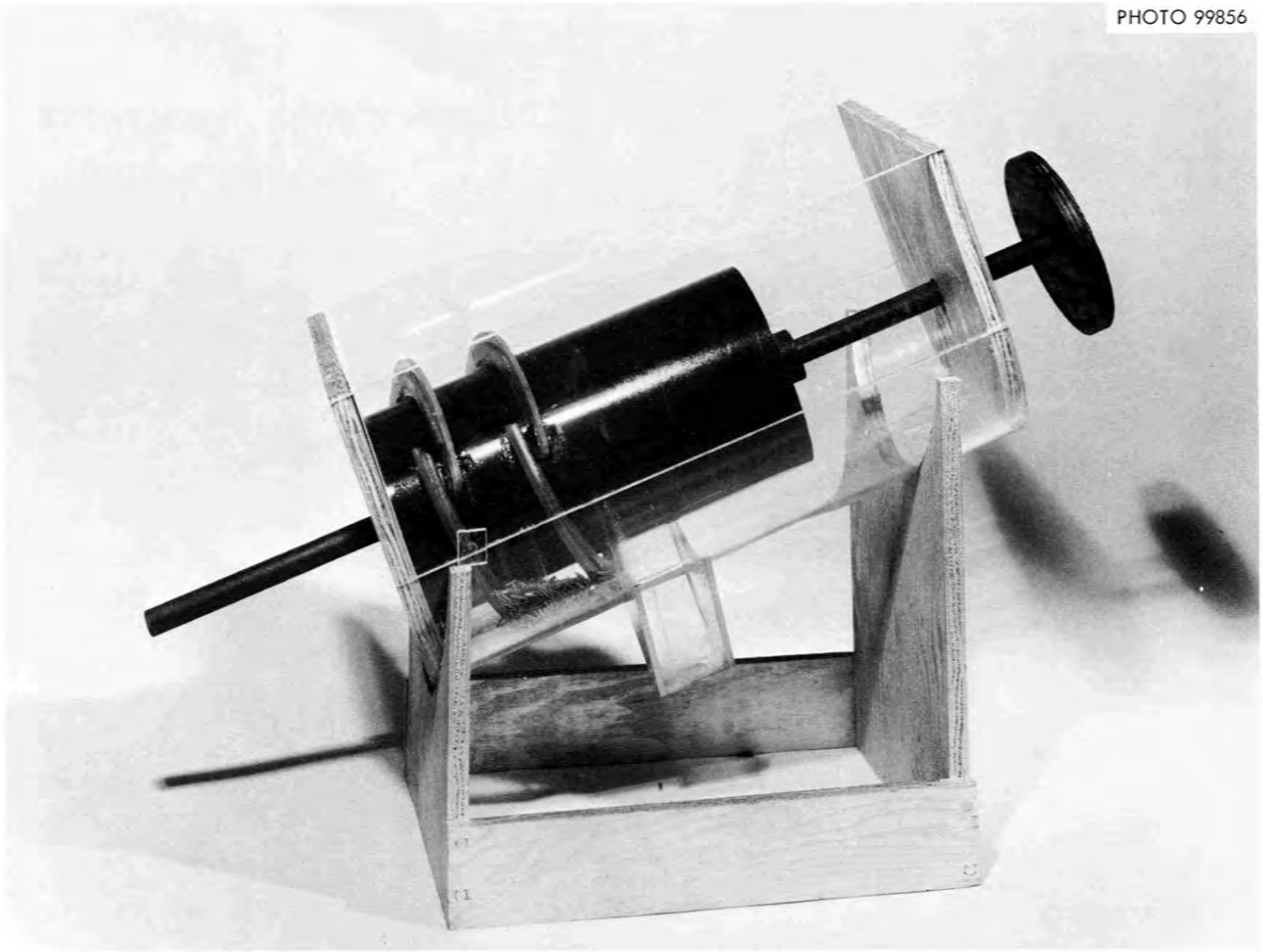

Fig. 23. Model 2 - Spiral Screw, Mark II.

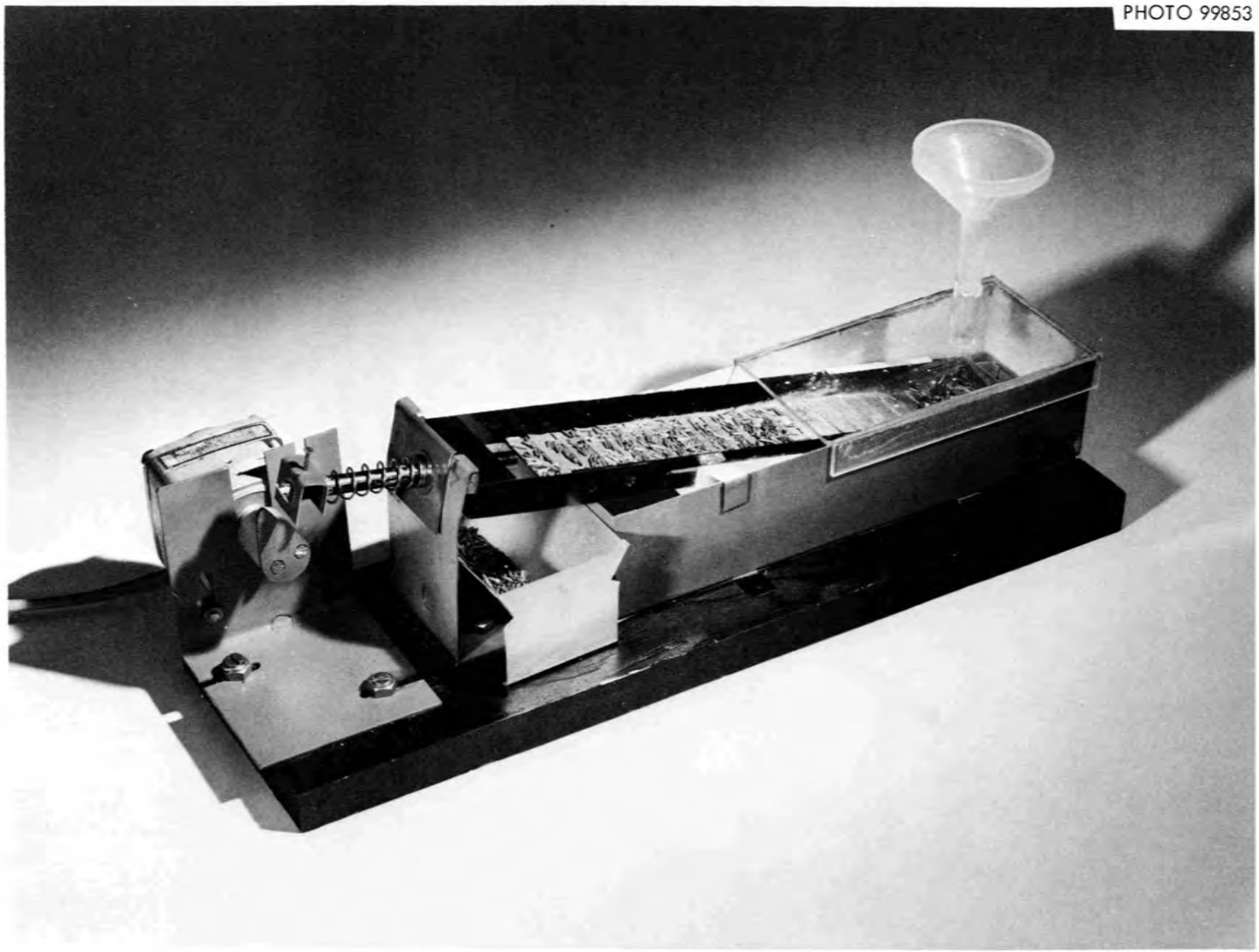

Fig. 24. Model 3 - Inclined Vibratory Tray.

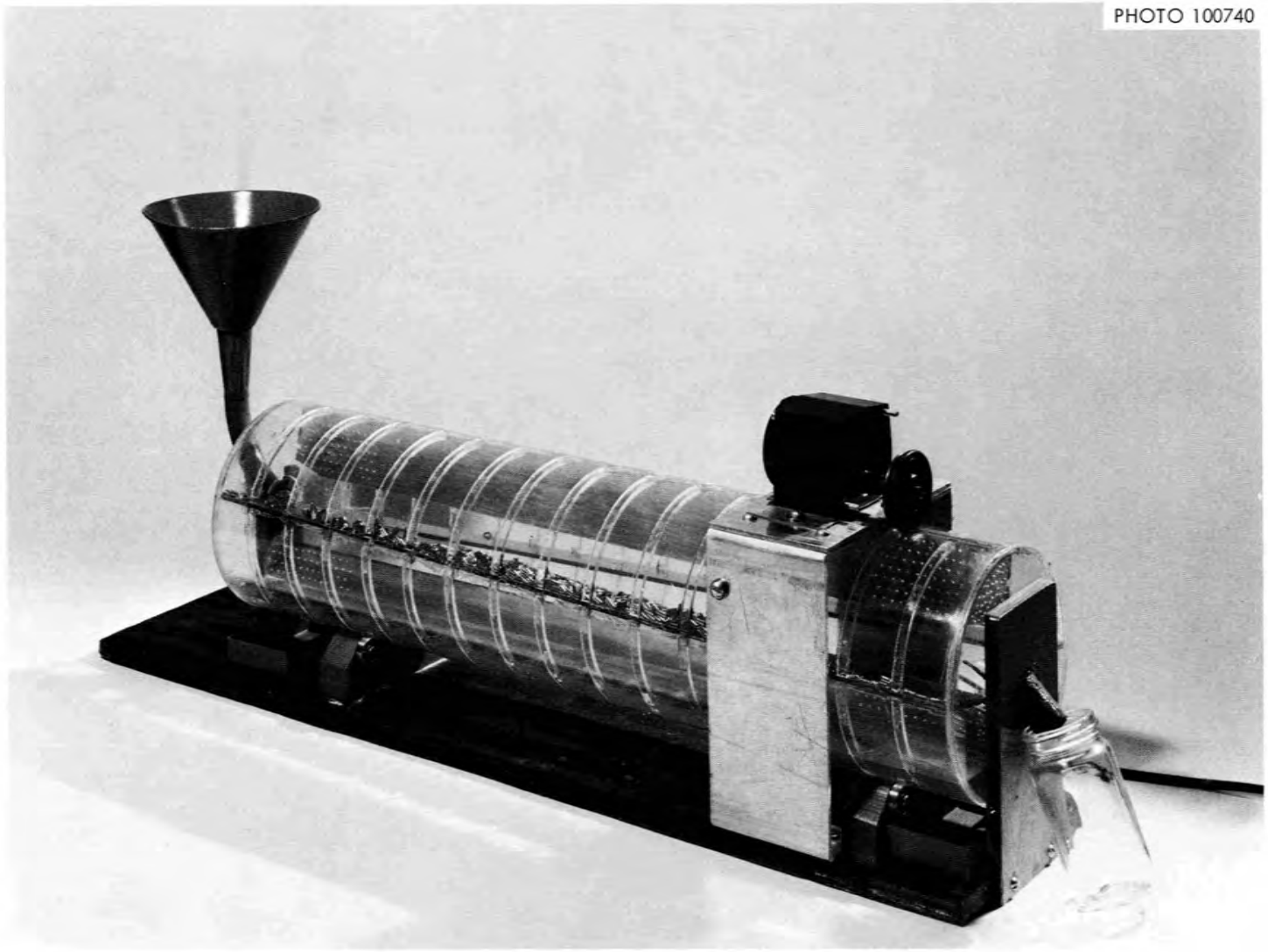

Fig. 25. Model 4 - Rotary Drum, Mark I.

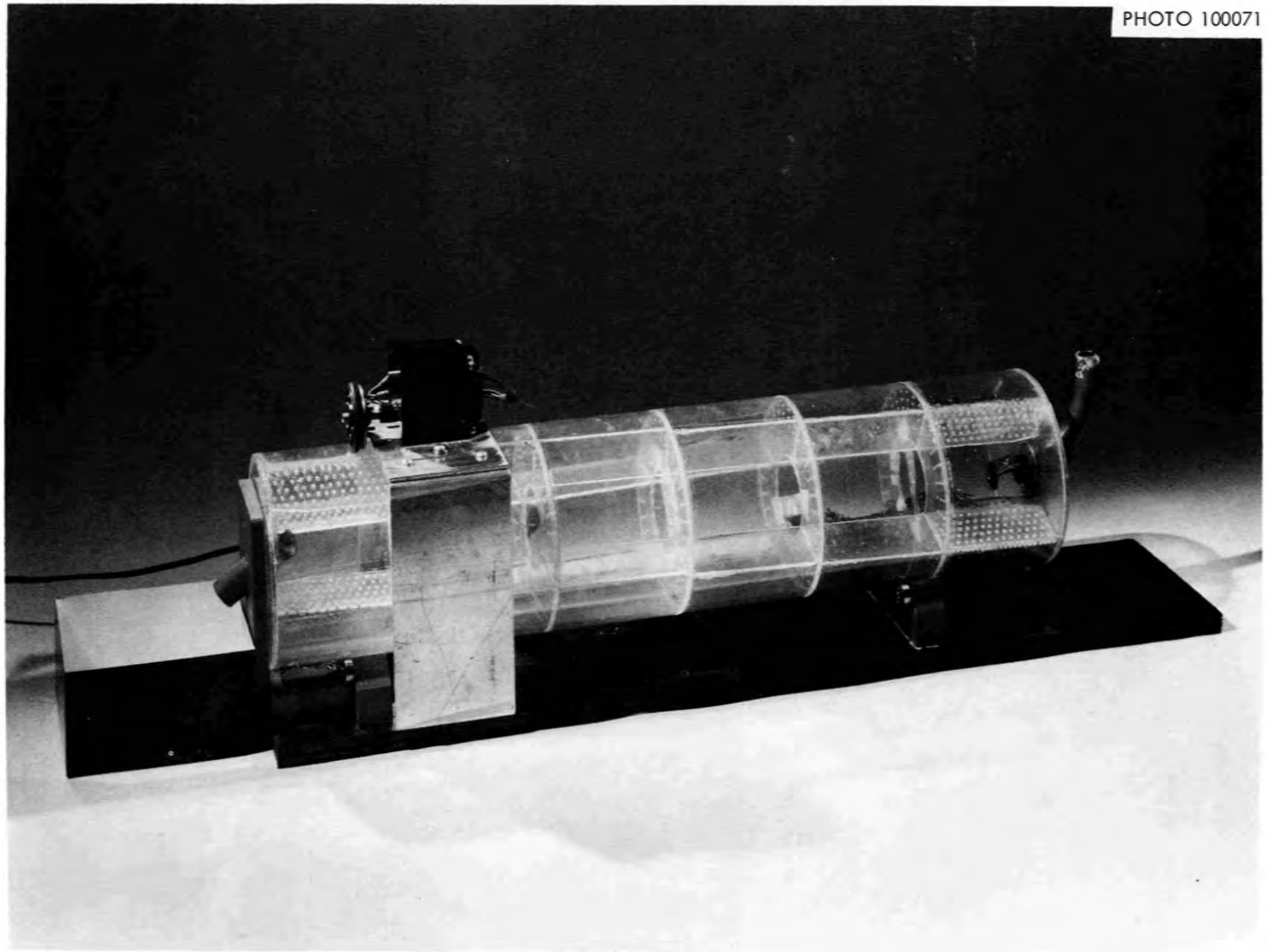

Fig. 26. Model 5 - Rotary Drum, Mark II.

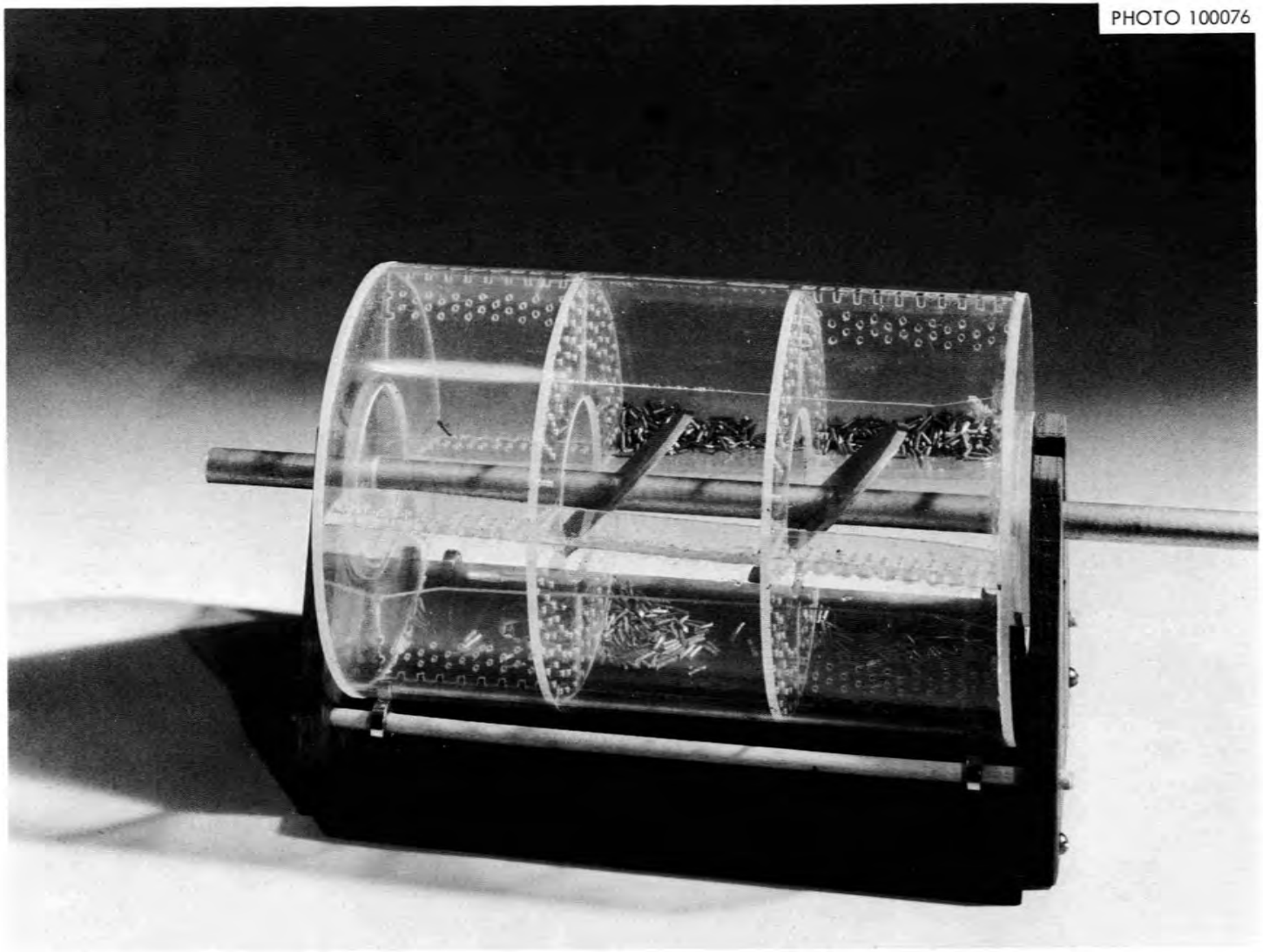

Fig. 27. Model 6 - Rotary Drum with Elliptical Baffle.

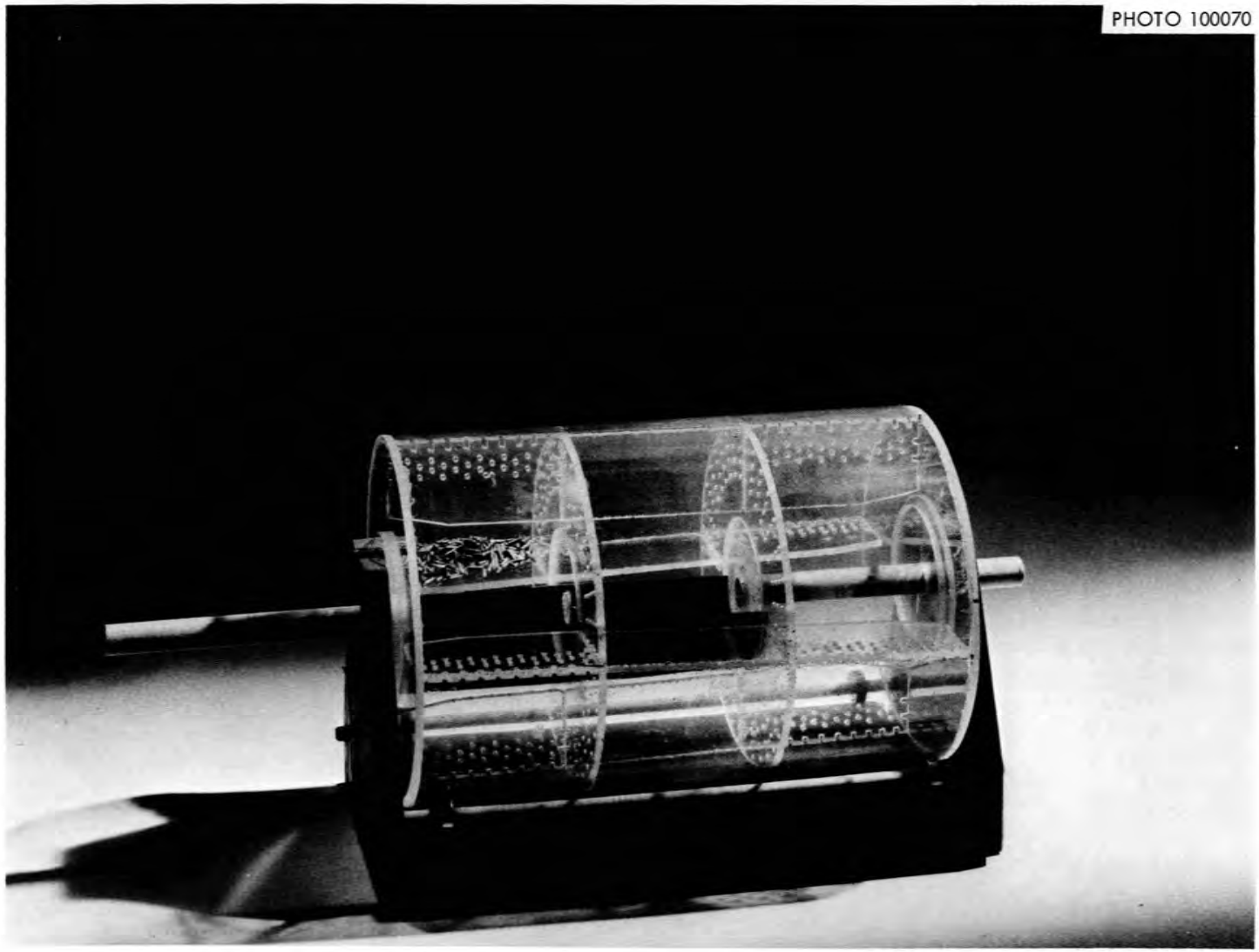

Fig. 28. Model 7 - Rotary Drum with Trough Transfer.

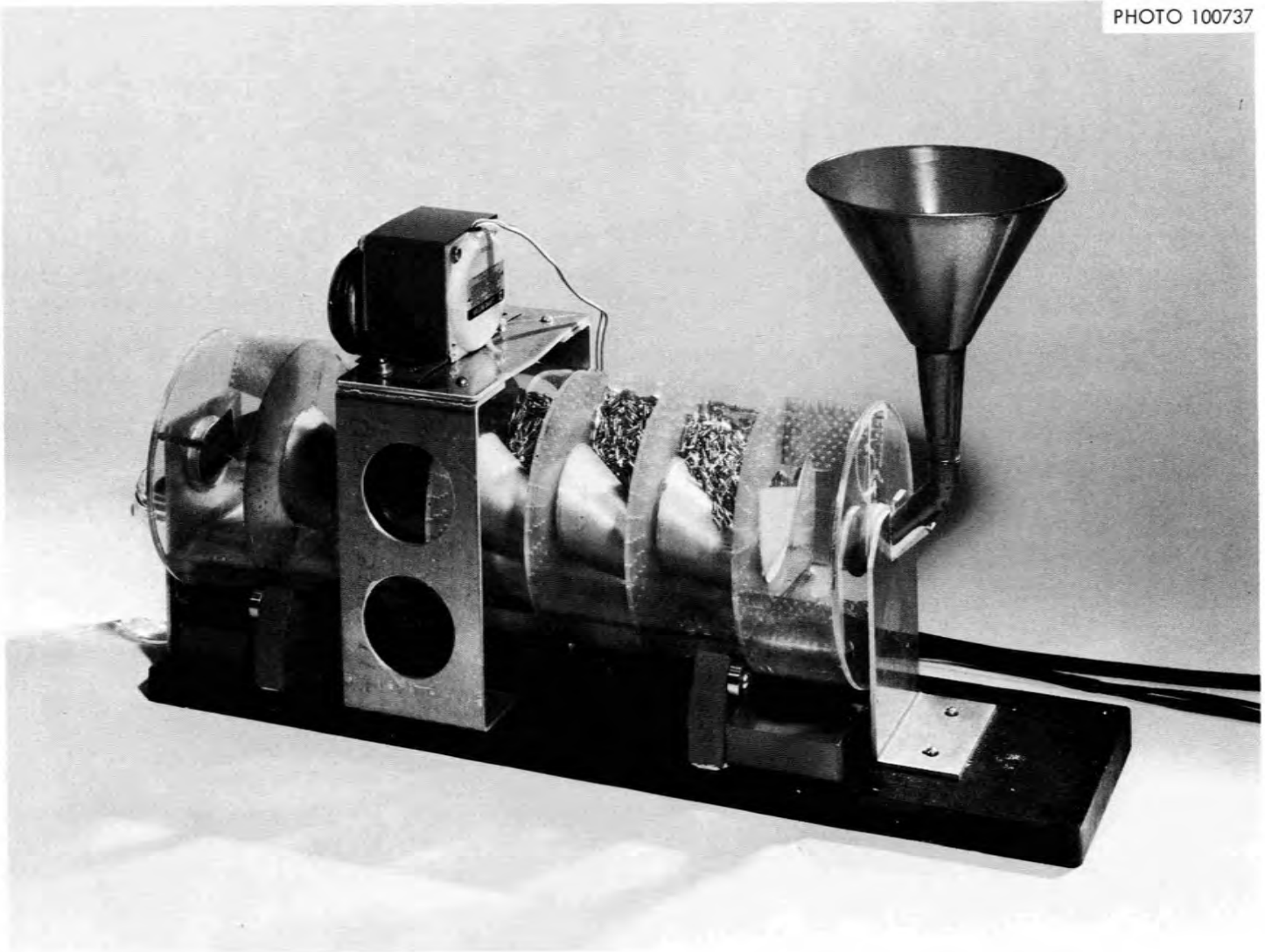

Fig. 29. Model 8 - Rotary Drum with Sloped Axial Transfer Ducts. Model shown in mixing mode.

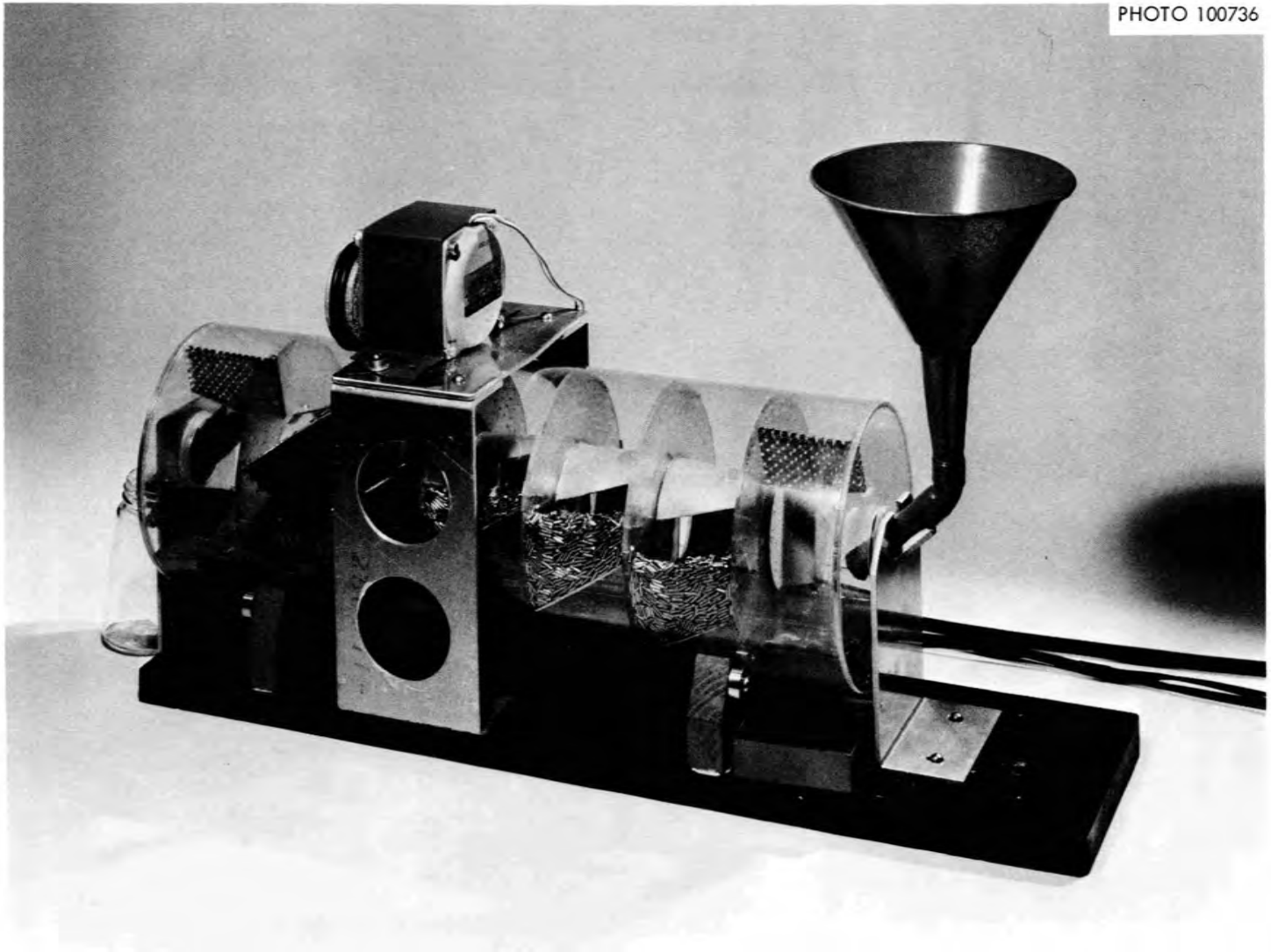

Fig. 30. Model 8 - Rotary Drum with Sloped Conical Transfer Ducts. Model shown in transfer mode.

show the various methods of solids agitation and transfer. Models 1 and 2 are modified versions of the continuous, flooded rotary leacher (see Fig. 14), which has been developed and demonstrated previously. The remaining six models are of newer design. The ideal dissolver should provide adequate residence time to permit complete dissolution of the fuel and proper mixing to prevent local acid deficiencies. In most designs of continuous leachers, these two features are interrelated and cannot be separately controlled.

Model 1 (Fig. 22) consists of a spiraled feed screw enclosed in a rotating perforated cylinder. The outside of the cylinder is provided with a roller chain that is loosely wound around the cylinder in a spiral and attached with dowel pins at every pitch length; the necessary sag between pitch lengths is provided to permit the chain to drag on the bottom of the housing. The rotating cylinder is mounted in a housing having a cylindrical lower half but straight sides on the upper half to alleviate any jamming that might occur between the chain and the housing. The housing, which is inclined at an angle of 20°, has a fuel loading tube at the lower end and a discharge chute at the upper end. It is filled with liquid dissolvent to a level that will not permit overflow into the discharge chute. An overflow at the lower end allows a continuous countercurrent flow of acid through the dissolver.

When simulated sheared fuel, containing 0.015-in.-diam spacer wires, and sand to represent the fines generated from shearing, was fed into the model, none of the spacer wires passed through the 0.062-in.-diam holes in the perforated cylinder. Spacer wires were also fed to the annulus region between the perforated cylinder and the housing. When the cylinder was rotated, some sand and spacer wires passed by the chain; however, this material eventually moved along the annulus and was discharged into the discharge chute.

Although the model was successfully demonstrated, considerable torque may be required to overcome the friction caused by spacer wires becoming enmeshed in the chain.

For actual fuel dissolutions, the rotating cylinder should be oscillated (to provide the required agitation of the fines) and rotated according to a predetermined time cycle (to advance the fuel through the leacher).

The function and the construction of Model 2 (Fig. 23) are identical to those of Model 1, except that the roller chain has been replaced with a series of loose-fitting hinged flights. For simplicity, only two pitch lengths of flights are shown. Two segments are provided for each pitch length. Each segment is hinged to the perforated cylinder with pins in oversized holes so that the segments will scrape the bottom of the housing as the cylinder is rotated. The outside radius of each flight segment is machined to match the inside radius of the housing exactly. The flights can raise up and pass over any solids that might have a tendency to wedge between the flight and the housing. In demonstrations, this model was found to provide a more positive transfer of material through the annulus than Model 1 does.

Model 3 (Fig. 24) consists of a tray that is inclined at an angle of 12° and enclosed in a tank of liquid dissolvent. This tray has a spring-loaded operating shaft that extends through the tank wall. Except for the portion at the shaft, the tank has been omitted in Fig. 24 for clarity. The actual dissolver would have a discharge chute at the upper end of the inclined tray; the tank would be filled with dissolvent (nitric acid) to a level that would not overflow into the discharge chute, and would be provided with a liquid overflow at the lower end of the tray. Fresh acid would be introduced at the upper end of the tray to provide countercurrent flow to the sheared fuel traveling up the incline. A trough has been provided on the model in lieu of the discharge chute. Small steps have been attached to the inclined tray to provide the required "perch" for forcing the fuel up the incline when the compressed spring on the operating shaft is released. The motor is mounted outside the enclosed tank and is provided with an actuating arm for compressing and releasing the spring-loaded shaft. The time required for the fuel to travel up the inclined tray is controlled by the compression of the spring and the length and frequency

of the stroke of the operating arm. Any change in the 12° angle of the tray would also affect the rate of travel. The model has been successfully demonstrated with simulated fuel.

Model 4 (Fig. 25) is based on the concrete-mixer principle. This design has a single compartment containing four longitudinal baffles inside a rotating cylinder. The baffles are sloped at an angle of 2° to provide axial transfer of the sheared fuel through the leacher. As a result of initial testing, which showed that material was flowing through the leacher too rapidly, 1/8-in.-thick radial baffles were added inside the cylinder. A stationary feed tube is provided at one end of the leacher. A stationary discharge tube, which extends inside the rotating cylinder to collect the leached hulls as they slide off the edges of the baffles, is provided at the other end. The ends of the longitudinal baffles are perforated to reduce the amount of dissolvent present at the sealed joints and to prevent dissolvent from being discharged with the leached hulls. The dissolvent can be introduced into the leacher at either end. The rate at which material flows through the unit can be altered by changing the slope of the longitudinal baffles, the number of radial baffles, or the rotational speed of the cylinder.

When Model 4 was demonstrated, one disadvantage was quite obvious. The bulk of the sheared fuel was transferred through the leacher at a reasonable rate, but some of the fuel passed rapidly through the leacher and was discharged prematurely. This phenomenon, known as forward mixing, can result in high losses of fuel (discharged with the hulls). A mathematical analysis of forward mixing was made in order to determine the residence time distribution and, therefore, to predict the extent of the fuel loss.[18] The purpose of the analysis was to determine whether losses would be sufficiently high to cause this type of dissolver to be eliminated from further study. Results indicated that losses could be reduced by (1) providing more contact stages within the device (i.e. using a longer cylinder), (2) providing more effective mixing (i.e. using additional or larger-sized longitudinal baffles), or (3) using additional or larger-sized radial baffles. Some knowledge

of the dissolver length that would correspond to a contact stage is needed in order to further assess the magnitude of the problem. Since additional stages will reduce the losses to acceptable levels, one must conclude that forward mixing, per se, is not a deterrent to the study of rotary-drum dissolvers.

Model 5 (Fig. 26) is similar to Model 4 except that it features multiple compartments. This modification represents an attempt to eliminate forward mixing in the single-compartment version. Model 5 contains six compartments, each having four longitudinal baffles sloped at an angle of 2°, and fuel transfer plates are situated between each compartment for transferring fuel from one compartment to the next. Results of demonstration runs showed that forward mixing still existed in this model, although to a lesser degree.

The construction of Model 6 (Fig. 27) is identical to that of the multicompartmented Model 5, with the exception of the transfer plate design. (Only a partial model was made in order to check its operability.) In Model 6, the transfer plates are elliptical baffles, sloped 45°, that are located between each compartment. These plates are mounted on a common shaft that can be rotated or moved axially through the center holes in the partitions for controlling the agitation and transfer of fuel from one compartment to the next. During the agitation cycle, the baffles are positioned to prevent forward transfer of fuel into the succeeding compartment. The only observed forward mixing involved fuel that passed through the openings between the baffles and the holes in the partitions. When fuel is to be transferred, the baffles are rotated and positioned to provide the desired rate of transfer. Several revolutions of the cylinder are required in order to completely empty a compartment. This feature is undesirable since it would allow the fuel to be transferred through the leacher much too rapidly for the desired residence time. The use of straight baffles in alternate positions would eliminate this deficiency; however, twice the present total number of compartments would be required in this case.

The construction of Model 7 (Fig. 28) is identical to Model 6, except that the elliptical baffles have been replaced with a compartmented

circular trough that can be rotated or moved axially through the center holes in the partitions for transferring fuel from one compartment to the next. When agitation is desired, the cylinder is rotated for the desired length of time with the trough in an inverted position. When fuel is to be transferred from one compartment to the next, the trough is rotated 180° and the cylinder is rotated until all the fuel in each compartment has been loaded into a section of the trough. The trough is then pushed forward until each trough compartment has advanced. The trough is then rotated 180° in order to transfer the fuel into the compartments. In order to prevent fuel from becoming wedged between the mating parts, the cylinder should be stopped during the transfer of fuel from one compartment to the next. In demonstrations of the model, fuel was successfully agitated and transferred with no back or forward mixing. During the agitation cycle, some fuel lodged on top of the inverted trough. This undesirable feature can be corrected in several ways: (1) the longitudinal baffles can be designed in such a manner that they brush off the lodged fuel, (2) the trough can be rotated during the agitation cycle, or (3) a V-shaped trough can be used instead of the circular trough.

The cylinder and the partitions of Model 8 (Figs. 29 and 30) are identical to those of Models 6 and 7. All moving parts have been eliminated. The center holes of the partitions between compartments in Model 8 are connected with a sloped, conical-shaped duct for fuel transfer. Each compartment also contains a sloped baffle which matches the angle of the slot in the fuel transfer duct. This baffle is positioned to provide a smooth transfer of fuel from the baffle into the duct. In addition, each compartment contains a second baffle which is parallel to the axis of the cylinder and is positioned adjacent to the sloped baffle at the discharge end of the duct. During the agitation cycle, the cylinder is rotated in such a manner that the straight baffle picks up the fuel and drops it over the fuel transfer duct to the bottom of the cylinder, as shown in Fig. 29. When fuel is to be transferred from one compartment to the next, the rotation of the cylinder is reversed; then the sloped baffle picks up the fuel and allows it to

fall into the sloped transfer duct. This transfer duct feeds into the next compartment, as shown in Fig. 30. The agitation cycle and the transfer cycle worked successfully during demonstrations of the model. No forward mixing occurs between cycles, and all the fuel is transferred from one compartment to the next in a single reverse revolution.

4.1 Summary of New Dissolver Concepts

The following conclusions have been drawn from observations of the operating dissolver models:

1. The spiraled-screw models (Models 1 and 2) provide the desired control of the flow of material through the leacher but do not provide sufficient mixing.
2. The model featuring the inclined vibrating tray (Model 3), the concrete-mixer type (Models 4 and 5), and the elliptical-baffle type (Model 6) provide sufficient agitation of the fines; however, none of these maintains positive control over the rate at which fuel is transferred through the leacher.
3. The compartmented-trough design (Model 7) fulfills all requirements, but difficulties could be encountered if fuel became wedged between the mating parts. A different method for introducing the fuel and discharging the leached hulls will be required for this type of leacher.
4. The compartmented model with the sloped conical-shaped transfer ducts (Model 8) meets all stated requirements. It has no moving parts other than the rotating drum and exhibits no forward mixing.

The new continuous-dissolver concepts and models provide insight into the problems of transferring a wide variety of materials (e.g., hulls, wires, and fines) through equipment. They have been devised with foreknowledge of the special requirements of LMFBR fuel processing. Adaptation of these designs to meet nuclear safety requirements, allow heat transfer, or interface with adjacent equipment should be straightforward.

5. ACKNOWLEDGMENTS

The assistance of various members of the Unit Operations Section in clarifying historical facts about dissolver designs is gratefully acknowledged.

The design and fabrication of the new dissolver models were accomplished in total by C. H. Odom and M. H. Kunselman of the General Engineering Division.

6. REFERENCES

1. C. D. Watson et al., The Shear-Leach Process for Spent Nuclear Fuels, ORNL-3625 (in preparation).

2. B. C. Finney et al., Shear-Leach Process: Semicontinuous and Batch Leaching of Sheared, Unirradiated, Stainless-Steel-Clad and Zircaloy-2-Clad UO_2 and UO_2-ThO_2, ORNL-3984 (July 1969).

3. "An Introduction to Fuel Processing," Power Reactor Technology and Reactor Fuel Processing 10(1), 59 (Winter 1966-67).

4. T. C. Runion, NFS Chemical Processing Plant - Capability and Cost Study, Davison Chemical Co. (May 1962).

5. T. C. Runion and W. H. Lewis, "Construction and Operation of the West Valley Reprocessing Plant," paper presented at the A.I.Ch.E. Symposium on Recent Advances in Reprocessing of Irradiated Fuel, New York City, Nov. 26-30, 1967; to be published in the Nuclear Engineering Symposium Series.

6. Staff of the Chemical Technology Division, Aqueous Processing of LMFBR Fuels - Technical Assessment and Experimental Program Definition, ORNL-4436 (June 1970).

7. Chemical Processing and Equipment, USAEC, pp. 23-25, McGraw-Hill, New York, 1955.

8. R. E. Blanco and C. D. Watson, "Head-End Processes for Solid Fuels," pp. 23-106 in Reactor Handbook, Vol. II, ed. by S. M. Stoller and R. B. Richards, Interscience, New York, 1961.

9. P. E. Smith et al., "Equipment Design - Process and Mechanical Considerations," pp. 536-42 in Reactor Handbook, Vol. II, ed. by S. M. Stoller and R. B. Richards, Interscience, New York, 1961.

10. J. F. Flagg (ed.), Chemical Processing of Reactor Fuels, Academic, New York, 1961.

11. J. T. Long, Engineering for Nuclear Fuel Reprocessing, Gordon and Breach, New York, 1968, Chap. 4.

12. H. Schneider et al., A Study of the Feasibility of a Small-Scale Reprocessing Plant for the Dresden Nuclear Power Station, IDO-14521 (1960).

13. F. L. Culler et al., An Analysis of Power Reactor Fuel Reprocessing, ORNL-2265 (March 1957).

14. Chem. Technol. Div. Ann. Progr. Rept. May 31, 1964, ORNL-3627.

15. Chem. Technol. Div. Ann. Progr. Rept. May 31, 1965, ORNL-3830.

16. Chem. Technol. Div. Ann. Progr. Rept. May 31, 1963, ORNL-3452.

17. R. E. Blanco et al., "Preparation of Stainless Steel-, Zirconium-, and Graphite-Clad and -Base Reactor Fuels for Solvent Extraction," Chem. Eng. Progr., Symp. Ser. 60 (51) (1964).

18. Staffs of the Chemical Technology and the Metals and Ceramics Divisions, LMFBR Fuel Cycle Studies Progress Report, Nos. 1-19, ORNL-TM-2552, -2585, -2624, -2650, -2671, -2710, -2748, -2764, -2795, -2819, -2871, -2918, -2949, -2996, -3018, -3072, -3095, -3127, -3180.

19. H. T. Blaine, Dissolution of Power Reactor Fuel Cores, HW-66320 (1960).

20. C. A. Lorenzen, Development of a Continuous Dissolver for Plutonium Scrap, ISO-Sa-29 (1966).

21. E. S. Grimmett and B. P. Brown, "A Pulsed Column for Countercurrent Liquid-Solids Flow," Ind. Eng. Chem. 54 (11), 24 (1962).

22. D. E. Ferguson and R. E. Blanco, "General Survey of Reprocessing of Thermal Reactor Fuels," presented at the 1968 American Nuclear Society International Meeting, Washington, D. C., Nov. 10-15, 1968.

23. F. T. Snyder, W. C. Stoddart, and P. E. Scott, A Study of Reprocessing of Spent Fast Test Reactor Fuel (and Other LMFBR Fuels) in a Nuclear Fuel Services Plant, ORNL-TM-2096 (January 1968).

24. W. H. Reas, "The Aquafluor Process," presented at the Netherlands-Norwegian Reactor School, Advanced Course on Reprocessing of Fuel from Present and Future Power Reactors, at the Institutt for Atomenergi, Kjeller, Norway, Aug. 21-Sept. 1, 1967.

25. W. H. Reas, "Mechanical Fuel Handling and Chop-Leach Processing," presented at the Netherlands-Norwegian Reactor School, Advanced Course on Reprocessing of Fuel from Present and Future Power Reactors, at the Institutt for Atomenergi, Kjeller, Norway, Aug. 21-Sept. 1, 1967.

26. R. I. Newman, Allied Chemical Corp., private communication, Oct. 15, 1968.

27. Allied Chemical Safety Analysis Report, BNFP, Vol. 1 and Vol. 2, 1968.

28. Barnwell Nuclear Fuel Plant Safety Analysis Report, Amendment 2, DOCKET-50332-4 (1969).

29. M. Selman, Atlantic Richfield Co., private communication, Sept. 6, 1968.

30. Guy Cherel, Saint-Gobain Techniques Nouvelles, private communication, June 1968.

31. E. Detilleux, Eurochemic, Its History and Program in Chemical Processing of Irradiated Fuels, TID-7583 (1959).

32. T. J. Barendregt, "Chemical De-Canning of Fuel," presented at the Netherlands-Norwegian Reactor School, Advanced Course on Reprocessing of Fuel from Present and Future Power Reactors, at the Institutt for Atomenergi, Kjeller, Norway, Aug. 21-Sept. 1, 1967.

33. "Commercial Aspects of Fuel Processing," Reactor Fuel Process. 8(2), 69-77 (Winter 1964-1965).

34. Harry Corns, Windscale Works, UKAEA, private communication.

35. B. F. Warner et al., The Development of the New Separation Plant, Windscale," Proc. Intern. Conf. Peaceful Uses At. Energy, Geneva, 1964, 10 (1965).

36. B. F. Warner, "The New Windscale Separation Plant - Design and Operating Experience," Kerntechnik 9, 249-52 (1967).

37. K. W. Carley-Macauly and R. J. Moulton, "Continuous Dissolution in a Packed Bed," Chem. Process Eng. 48(9), 83-90 (1967).

38. G. S. Larner et al., Processing in Limited Geometry, Part 16, The Hydraulic Lifting of Solids from a Continuous Dissolver for Nuclear Fuel, AERE-R5104 (1966).

39. D. M. Donaldson et al., "Reprocessing Fast Reactor Fuels at Dounreay," presented at the AIME Annual Meeting, Oct. 25, 1961.

40. R. H. Allardice, "Reprocessing of Fast Breeder Fuels by Aqueous Methods: Part 2--Second and Third Generation Fast Reactors," presented at the Netherlands-Norwegian Reactor School, Advanced Course on Reprocessing of Fuel from Present and Future Power Reactors, at the Institutt for Atomenergi, Kjeller, Norway, Aug. 21-Sept. 1, 1967.

41. D. E. Ferguson, Oak Ridge National Laboratory, private communication (June 10, 1970).

42. J. C. Boudry et al., Processing of Fuel Elements in the Rapsodie Fast Neutron Reactor - Mechanical Treatment of the Elements Before Dissolution, Commissariat a l'Energie Atomique, France.

43. Guy Cherel, Saint-Gobain Techniques Nouvelles, private communication (September 1968).

44. Pierre Michel and Jacques Dollfus, Apparatus for the Reprocessing of Highly Irradiated Fuels, CEA-CONF-1359 (1969).

45. Karlsruhe Reprocessing Plant ORNL-tr-1768 (translation of the German report GWK-7 by R. Gregg Mansfield, ORNL).

46. Dissolution of UO_2 by the Chop-Leach Process: Chopper and Dissolver Final Report, ORNL-tr-1974 [translated from Klaus Jessnitzer et al., Aufloesen von UO_2 Nach dem Chop-Leach-Verfahren Chopper and Dissolver. Schlussbericht (March 1966)].

47. Karlsruhe Reprocessing Plant, ORNL-tr-2116 [translated from German Nuclear Forum, ACHEMA XV, Frankfurt Am Main (1967)].

48. A. Boettcher, Juelich, Germany, private communication (November 1968).

49. G. Beone, R. Lojacono, et al., Unirradiated MTR Fuel Elements Dissolution in Semicontinuous Flooded Dissolvers for Acid and Acid-Deficient Final Conditions, Comitato Nazionale per Italia, RT CHI-(67)8, (1967).

50. A. C. Schafer, "Reprocessing of the Elk River Reactor Fuel in the ITREC Plant," Reactor and Fuel Processing Technology 12(3), 259-63 (1969).

51. Giacomo Colleri, EUREX, CEN, private communication (September 1968).

52. H. N. Sethna and N. Srinivasan, "Fuel Reprocessing Plant at Trombay," Proc. Intern. Conf. Peaceful Uses At. Energy, Geneva, 1964, 10 (1965).

53. C. S. Ehrman, Design Study Report--Preliminary Design, Spent Fuel Reprocessing Plant, Chop and Leach Facility, AMF Atomics (May 1964).

54. D. E. Bloomfield et al., "Design of a Chop and Leach Reprocessing Plant for the Japanese Atomic Fuel Corporation," presented at the Eleventh Annual Meeting of the American Nuclear Society, Gatlinburg, Tenn., 1965.

55. V. B. Shevchenko, Prospectives of Processing Highly Irradiated Fuel Elements by the Extraction Method, ANL-tr-770 (1969).

56. W. Kraak, "Nieuwe Ontwikkelingen in de Splijtsofopweking," Atomenergie, Nov. 1968.

57. W. A. Rodger and D. E. Ferguson, "Recent Advances in Reprocessing of Irradiated Fuel," Nuclear Engineering Part 20, Chemical Engineering Progress Symposium Series (1969).

INTERNAL DISTRIBUTION

1. R. D. Ackley
2. R. E. Adams
3. G. M. Adamson, Jr.
4. L. G. Alexander
5. E. D. Arnold
6. M. J. Bell
7. R. E. Blanco
8. J. O. Blomeke
9. E. S. Bomar
10. W. D. Bond
11. G. E. Boyd
12. R. A. Bradley
13. R. E. Brooksbank
14. K. B. Brown
15. F. R. Bruce
16. W. D. Burch
17. P. T. Carlson
18. W. L. Carter
19. G. I. Cathers
20. J. M. Chandler
21. S. D. Clinton
22. W. R. Cobb
23. H. E. Cochran
24. C. F. Coleman
25. J. H. Coobs
26. L. T. Corbin
27. C. M. Cox
28. R. L. Cox
29. D. J. Crouse
30. F. L. Culler, Jr.
31. J. E. Cunningham
32. F. C. Davis
33. W. Davis, Jr.
34. H. G. Duggan
35. J. H. Evans
36. D. E. Ferguson
37. L. M. Ferris
38. B. C. Finney
39. R. B. Fitts
40. J. D. Flynn
41. M. H. Fontana
42. E. J. Frederick
43. J. H. Frye, Jr.
44. W. Fulkerson
45. F. J. Furman
46. H. W. Godbee
47. H. E. Goeller
48. S. M. Goldberg
49. J. H. Goode
50. A. T. Gresky
51. W. R. Grimes
52-56. W. S. Groenier
57. P. A. Haas
58. R. G. Haire
59. R. L. Hamner
60. W. O. Harms
61. F. E. Harrington
62. C. C. Haws, Jr.
63. M. R. Hill
64. N. W. Hill
65. F. J. Homan
66. D. E. Horner
67. F. J. Hurst
68. A. R. Irvine
69. F. A. Kappelmann
70. P. R. Kasten
71. A. H. Kibbey
72. F. G. Kitts
73. B. B. Klima
74. W. J. Lackey
75. C. E. Lamb
76. J. M. Leitnaker
77. W. J. Leonard
78. T. B. Lindemer
79. C. S. Lisser
80. R. E. Leuze
81. M. H. Lloyd
82. E. L. Long, Jr.
83. A. L. Lotts
84. R. S. Lowrie
85. R. E. MacPherson, Jr.
86. D. W. Magnuson
87. S. Mann
88. E. J. Manthos
89. C. D. Martin, Jr.
90. W. R. Martin
91. J. P. McBride, Jr.
92. R. W. McClung
93. K. H. McCorkle
94. W. T. McDuffee
95. C. J. McHargue
96. A. B. Meservey
97. J. G. Moore
98. L. E. Morse
99. C. A. Mossman
100. J. P. Nichols
101. E. L. Nicholson
102. K. J. Notz

103. C. H. Odom
104. A. R. Olsen
105. G. W. Parker
106. J. R. Parrott
107. W. A. Pate
108. P. Patriarca
109. W. L. Pattison
110. W. H. Pechin
111. M. K. Preston
112. R. H. Rainey
113. J. M. Robbins
114. J. T. Roberts
115. A. D. Ryon
116. C. F. Sanders
117. J. M. Schmitt
118. J. L. Scott
119. J. D. Sease
120. L. B. Shappert
121. J. W. Snider
122. W. G. Stockdale
123. W. C. Stoddart
124. O. K. Tallent
125. R. E. Thoma
126. R. E. Toucey
127. D. B. Trauger
128-129. W. E. Unger
130. J. E. Van Cleve
131. V. C. A. Vaughen
132. T. N. Washburn
133-137. C. D. Watson
138. A. M. Weinberg
139. J. R. Weir
140. G. A. West
141. M. E. Whatley
142. W. M. Woods
143-144. R. G. Wymer
145. O. O. Yarbro
146. H. C. Young
147-148. Central Research Library
149. Document Reference Section
150-159. Laboratory Records
160. Laboratory Records, RC
161. ORNL Patent Office
162. Nuclear Safety Information Center

AEC, Washington
163. P. R. Clark, Division of Naval Reactors
164. J. Crawford, RDT
165. J. S. Griffo, Div. of Space Nuclear Systems
166. N. Haberman, RDT
167. P. A. Halpine, RDT
168. E. E. Kintner, RDT
169. R. A. Kosiba, RDT
170. J. A. McBride, Div. of Materials Licensing
171-174. W. H. McVey, RDT
175. A. C. Millunzi, RDT
176. W. A. Newson, RDT
177. E. C. Norman, RDT
178. M. Rosen, RDT
179. S. Rosen, RDT
180. H. Schneider, RDT
181-182. J. M. Simmons, RDT
183. E. E. Sinclair, RDT
184. A. N. Tardiff, RDT
185. W. R. Voigt, Jr., Div. of Production
186. C. E. Weber, RDT
187. M. J. Whitman, RDT

AEC - ANL, USAEC, 9800 S. Cass Avenue, Argonne, Illinois 60439
188. M. E. Jackson, RDT Senior Site Representative

AEC - Atomics International, P. O. Box 1446, Canoga Park, Calif. 91304
189. R. L. Morgan, RDT Senior Site Representative

AEC - Canoga Park Area Office, USAEC, P. O. Box 591, Canoga Park, California 91305
190. C. W. Richards

AEC - Gulf Energy and Environmental Systems, Inc., P. O. Box 2325, San Diego, Calif. 92112
191. R. H. Ball, RDT Senior Site Representative

AEC - IDO, P. O. Box 2108, Idaho Falls, Idaho 83401
192. K. K. Kennedy, Idaho Operations Office
193. D. A. Moss, RDT Site Office, ANL-ID

AEC - ORNL RDT Site Office
194. D. F. Cope, RDT Senior Site Representative
195. R. L. Philippone

AEC - ORO, Oak Ridge, Tennessee 37830
196-210. DTIE
211. Laboratory and University Division
212. C. L. Matthews

AEC - Richland Operations Office, USAEC, P. O. Box 550, Richland, Washington 99352
213. W. Devine, Jr., Director, Production Reactor Division
214. P. H. Holsted, RDT Senior Site Representative, PNL
215. J. Shirley, FFTF Project Administrator, RL

Aerojet General Corporation, P. O. Box 15847, Sacramento, Calif. 95801
216. S. G. Harbison, LMFBR Program Manager

Allied Chemical Nuclear Products, Inc., P. O. Box 35, Florham Park, New Jersey 07932
217. R. I. Newman
218. E. M. Shank

ANL, 9700 South Cass Avenue, Argonne, Illinois 60439
219. Report Section, 203-CE-125
220. P. F. Gast
221. A. A. Jonke
222. J. H. Kittel
223. S. Lawroski
224. N. M. Levitz
225. W. J. Mecham
226. R. D. Pierce
227. W. B. Seefeldt
228. P. G. Shewman
229. M. J. Steindler
230. R. C. Vogel
231. D. S. Webster

ATCOR, Inc., 5 Westchester Plaza, Elmsford, New York 10523
232. Lois Seulowitz, Technical Librarian

Atlantic Richfield Hanford Co., Attention: Document Control, P. O. Box 250, Richland, Washington 99352
233. W. P. McCue
234. G. C. Oberg
235. Milt Szulinski
236. R. E. Tomlinson

Atomics International, Div. of North American Rockwell, Inc., P. O. Box 309, Canoga Park, California 91304
237. W. J. Anderson
238. R. Aronstein
239-242. Simcha Golan
243. C. A. Trilling

Babcock & Wilcox, Research and Development Div., P. O. Box 1260, Lynchburg, Virginia 24505
244. R. V. Carlson
245. E. M. Croft
246. E. W. Dewell

Battelle Pacific Northwest Laboratory, P. O. Box 999, Richland, Washington 99352
247. E. R. Astley
248. D. C. Boyd
249. R. E. Burns
250. E. D. Clayton
251. Director, PNL
252. D. E. de Halas
253. A. M. Pratt

BNL, Upton, New York 11973
254. E. E. Winche

Combustion Engineering, Inc., Nuclear Power Dept., P. O. Box 500, Windsor, Connecticut 06095
255. W. P. Chernock
256-257. W. P. Staker

E. I. du Pont de Nemours & Co., Savannah River Laboratory, Aiken, South Carolina 29801
258. L. H. Meyer
259. D. A. Orth
260. E. B. Sheldon

General Electric Company, 175 Curtner Avenue, San Jose, California 95125
261. R. G. Barnes

General Electric Company, 310 De Guigne Drive, Sunnyvale, California 94086
262. W. E. Bailey
263. A. S. Gibson

General Electric Company, Vallecitos, Nuclear Center, Vallecitos Road, Pleasanton, California 94566
264. W. H. Reas

General Electric Company, Knolls Atomic Power Laboratory, P. O. Box 1072, Schenectady, New York 12301
265. R. A. Proebstel

Gulf Energy & Environmental Systems, Inc., P. O. Box 608, San Diego, California 92112
266. L. H. Brooks
267. L. J. Colby
268. Stanley Donelson
269. A. J. Goodjohn
270-271. R. H. Graham
272. A. R. Matheson
273. R. E. Norman
274. J. N. Siltanen
275. H. B. Stewart

Idaho Nuclear Corporation, P. O. Box 1845, Idaho Falls, Idaho 83401
276. J. A. Buckham
277. W. J. Maeck

Kerr-McGee Corporation, Nuclear Div., Oklahoma City, Oklahoma 73102
278. R. M. Fryar, Vice President

Massachusetts Institute of Technology, Cambridge, Massachusetts 02139
279. Manson Benedict
280. E. A. Mason

National Lead Company of Ohio, P. O. Box 39158, Cincinnati, Ohio 45239
281. S. Marshall

National Lead Company, 111 Broadway, New York, N. Y. 10006
282. S. H. Brown, Assistant to Manager

North American Carbon, Inc., P. O. Box 212, Columbus, Ohio 43216
283. J. L. Kovach

Nuclear Fuel Services, Inc., Wheaton Plaza, Suite 906, Wheaton Maryland 20902
284. W. H. Lewis, Vice President

Nuclear Materials and Equipment Corp., Apollo, Pennsylvania 15613
285. C. S. Caldwell
286. W. J. Ross
287. M. Selman
288. S. H. Smiley
289. B. L. Vondra, Jr.

United Nuclear Corp., Grasslands Rd., Elmsford, New York 10523
290. A. Strasser

WADCO, Inc., P. O. Box 1970, Richland, Washington 99352
291. John M. Atwood
292. Carl R. Cooley
293. E. D. Grazzini
294. J. E. Hanson
295. W. E. Roake
296. W. F. Sheely
297. R. C. Smith

Westinghouse Electric Corp., P. O. Box 158, Madison, Pennsylvania 15663
298. E. F. Beckett
299. Peter Murray
300. W. C. Ritz
301. J. D. Sutherland

Westinghouse Electric Corp., Nuclear Fuel Div., P. O. Box 355, Pittsburgh, Pennsylvania 15230
302. R. E. Olson