CENTRAL RESEARCH LIBRARY
DOCUMENT COLLECTION

OAK RIDGE NATIONAL LABORATORY
operated by
UNION CARBIDE CORPORATION • NUCLEAR DIVISION
for the
U. S. ATOMIC ENERGY COMMISSION

ORNL-TM- 3708

MARTIN MARIETTA ENERGY SYSTEMS LIBRARIES
3 4456 0059121 4

cy. 44

RADIOISOTOPE PROGRAM (8000) PROGRESS REPORT FOR JANUARY 1972

A. F. Rupp

OAK RIDGE NATIONAL LABORATORY
CENTRAL RESEARCH LIBRARY
DOCUMENT COLLECTION
LIBRARY LOAN COPY
DO NOT TRANSFER TO ANOTHER PERSON
If you wish someone else to see this document, send in name with document and the library will arrange a loan.
UCN-7969
(3 3-67)

[redacted]

NOTICE This document contains information of a preliminary nature and was prepared primarily for internal use at the Oak Ridge National Laboratory. It is subject to revision or correction and therefore does not represent a final report.

This report was prepared as an account of work sponsored by the United States Government. Neither the United States nor the United States Atomic Energy Commission, nor any of their employees, nor any of their contractors, subcontractors, or their employees, makes any warranty, express or implied, or assumes any legal liability or responsibility for the accuracy, completeness or usefulness of any information, apparatus, product or process disclosed, or represents that its use would not infringe privately owned rights.

ORNL-TM-3708

Contract NO. W-7405-eng-26

ISOTOPES DEVELOPMENT CENTER

RADIOISOTOPE PROGRAM (8000) PROGRESS REPORT FOR JANUARY 1972

A. F. Rupp

Work Sponsored by
AEC Division of Applied Technology

FEBRUARY 1972

OAK RIDGE NATIONAL LABORATORY
Oak Ridge, Tennessee 37830
operated by
UNION CARBIDE CORPORATION
for the
U.S. ATOMIC ENERGY COMMISSION

MARTIN MARIETTA ENERGY SYSTEMS LIBRARIES
3 4456 0059121 4

CONTENTS

Page

RADIOISOTOPE PRODUCTION AND MATERIALS DEVELOPMENT 1

REACTOR-PRODUCED ISOTOPES 1

A. Biomedical Radioisotopes 1

1. Potassium-43 1

B. Reactor Products Pilot Production 2

1. Copper-67 2

C. HFIR Target Capsule Tubing Evaluation 3

ACCELERATOR-PRODUCED ISOTOPES 3

A. Biomedical Radioisotopes 3

1. Gallium-67 3
2. Indium-111 4

B. Accelerator Products Pilot Production 5

FISSION PRODUCTS 5

A. Krypton-85 Enrichment 5

B. Cesium-137 Pilot Production 6

1. Processing and Process Status 6
2. Operational Summary 7
3. Current Orders 7
4. Source Fabrication 7

C. Strontium-90 Pilot Production 7

1. Processing and Process Status 7
2. Operational Summary 8
3. Current Orders 8
4. Source Fabrication 9
5. URIPS-8 Generators 9
6. Sintering Furnace 9
7. Shielded Manipulator Remover 9

D. Short-Lived Fission Products Pilot Production 10

E. Promethium-147 Source Fabrication, Powder Shipments, and Current Orders 10

SOURCE DEVELOPMENT 10

A. Strontium-90 Beta Sources 10

B. Gadolinium-153 10

C. Tellurium-123m 11

D. Dose Rate Measurements with Extrapolation Chamber 12

Page

E. Radioisotope Characterization, Quality Control, and Standards 16

1. Radioisotope Characterization 16
2. Radioisotope Special Analysis and Quality Control 16

F. Radiation Processing 16

1. Radiolytic Oxidation of Dye Waste Solution 16

TECHNOLOGY UTILIZATION 19

A. Information Center 19

B. Isotopes and Radiation Technology 19

C. Publications 19

RADIOISOTOPE SYSTEMS DEVELOPMENT 21

OCEANOGRAPHIC AND NATURAL RESOURCES DEVELOPMENT 21

A. Sand Transport Study 21

RADIOISOTOPE SALES 22

ADMINISTRATIVE 23

PUBLICATIONS 24

REPORTS 24

RADIOISOTOPE PROGRAM (8000) PROGRESS REPORT FOR JANUARY 1972

A. F. Rupp

RADIOISOTOPE PRODUCTION AND MATERIALS DEVELOPMENT

REACTOR-PRODUCED ISOTOPES - 08-01-01

A. Biomedical Radioisotopes

1. Potassium-43

The objectives of this project are: to prepare potassium-43 by the $^{43}Ca(n,p)^{43}K$ reaction, using isotopically enriched ^{43}CaO targets, in quantities sufficient for medical and biological experiments; to define a method for separating potassium-43 from the target in a purity suitable for medical use; and to establish cooperative programs with medical institutions interested in evaluating its usefulness. Potassium-43, with a half-life of 22.5 hr and gamma-ray emissions of 0.373 and 0.617 MeV, is potentially useful for metabolic and clinical studies of blood flow, rejection of transplanted organs, and kidney function because the dose rate would permit multiple doses.

Continuing our cooperative usage development program, we shipped 37.6 mCi of potassium-43 to University of Mississippi Medical Center, National Institutes of Health, Johns Hopkins Medical Institutes, University Hospitals of Cleveland, University of Texas Medical Center of Galveston, and V. A. Center, Wood, Wisconsin. Operations data on the production of this research material are summarized in Tables 1 and 2.

Table 1. Yield of Potassium-43 from Calcium-43 Targets

	Target 447	Target 448
Weight ^{43}CaO (mg)	164[a]	243[a]
Irradiation time (hr)	66.0	67.7
Product delivery date	1/12/72	1/25/72
Total product at 8:00 AM on delivery date (mCi)		
Potassium-43	13.5	18.8
Potassium-42	1.6 (11.8%)	2.2 (11.7%)

[a]61.6% calcium-43 recovered 12/17/71 from targets 418, 436, and 437.

Table 2. Radionuclides Found in Dissolver Sample by Gamma Scanning

Radionuclide	Half-Life	Activity at Discharge[a] (mCi)		Activity Concentration at Discharge (μCi/mg of target)	
		Target 447	Target 448	Target 447	Target 448
Potassium-43	22.5 h	31.9	46.5	194	191
Potassium-42	12.4 h	7.5	11.0	45	45
Sodium-24	15.0 h	4.2	2.5	25	10.4
Manganese-56	2.58 h	6.3	10.9	39	45
Strontium-87m	2.81 h	26	42.2	159	174
Calcium-47	4.53 d	0.33	0.51	2.0	2.08
Scandium-46	83.8 d	1.7	3.5	11	15
Scandium-47	3.38 d	0.3	0.50	1.7	2.1
Copper-64	12.7 h	2.7	6.7	17	27
Samarium-153	46.8 h	—	0.08	—	0.31
Zinc-69m	13.8 h	0.9	1.4	5.3	5.7

[a]Total target.

Target 448 demonstrates the feasibility of the 20-mCi batch process, and the procedure is now being adapted for routine use. Future development work will include completion of the nuclear properties study of potassium-43, development of techniques for processing larger batches of potassium-43, and determination of the neutron capture cross section of potassium-42 for possible preparation of potassium-43 by double neutron capture for applications where carrier-free potassium-43 is not required. A preliminary experiment has already confirmed that the potassium-42 cross section is significant, and a measurement is in progress.

B. Reactor Products Pilot Production (Production and Inventory Accounts)

Processed Units		Service Irradiations	
Radioisotope	Amount (mCi)	Type	Number
Calcium-47	13	Tellurium-126	1
Zinc-69m	346	Tellurium-122	1
Copper-67	26	Platinum-96	2
		Iridium-192	1
		Zirconium-96	1

1. Copper-67

Since the original report[1] on the cross-section measurements for the preparation of carrier-free copper-67 from this Laboratory, copper-67 (61.7 hr) has become a special production item of considerable interest to medical investigators. The biological importance of copper in trace quantities makes the use of carrier-free copper-64 (12.7 hr) or copper-67 preparations highly desirable to preclude difficulties that might arise from saturation

[1]H. A. O'Brien, Jr., *Intern. J. Appl. Radiation Isotopes* 20, 121 (1969).

or alteration of the system under study. The longer half-life and physical decay characteristics (91.3-, 93.3-, and 184.6-keV photons of 7, 17, and 47% abundance, respectively) of copper-67 combine to offer a favorable radionuclide for the *in-vivo* study of slow biological processes.

Iron-59 (45 d), a common radiocontaminant easily formed from iron impurities and detected via its high energy and high abundance photons, and neptunium-239 (2.35 d), formed from uranium impurities in the quartz irradiation ampul and leached from the ampul during target dissolution, were detected in an early preparation when 2.0 *M* HCl was used for the Cu(II) back-extraction. By reducing the HCl concentration of the acid back-extractant from 2.0 to 0.5 *M*, >99% of the Cu(II) was back-extracted with less than 1% of the Fe(III) and Np(IV) in the pregnant organic being removed. Scandium-46 (83.8 d) has also been detected as a trace (typically <0.01% at time of processing) radionuclidic impurity in products prepared using this separation procedure. There is no way for this extraction system to separate Sc(III) and Cu(II) without appreciable and unacceptable Cu(II) losses. If one must process samples containing appreciable amounts of scandium-46, the procedure may be altered to use 0.2 *M* HCl as the back-extractant, followed by passage of the aqueous back-extract through a small, strongly acidic cation exchange column, e.g., a Bio-Rad AG 50W-X8 column. The distribution coefficient for Sc(III) is more than two orders of magnitude greater than that for Cu(II) under these conditions and can be rapidly and quantitatively removed.

Due to high losses of the expensive zinc-67 enriched target material, additional target recovery development work will be undertaken during the next month. The preparation of a technical note covering this work has been started and will be submitted for publication upon its completion.

C. HFIR Target Capsule Tubing Evaluation

The bursting and collapse pressures were calculated for extruded X-8001 aluminum tubing which is used for HFIR target capsules. The bursting pressure and the collapse pressure were observed to be 4,535 and 262,896 psi, respectively.

ACCELERATOR-PRODUCED ISOTOPES - 08-01-02

A. Biomedical Radioisotopes

1. Gallium-67

The objectives of this program are to determine the optimal target configuration for gallium-67 (78.2 hr) production by the $^{68}Zn(p,2n)^{67}Ga$ reaction in acceptable purity and quantity and to provide gallium-67 for clinical applications research and development. Interest in this isotope has been spurred by evidence, obtained by the Medical Division

of Oak Ridge Associated Universities (ORAU), of a high uptake of carrier-free gallium-67 by lymphoid tumors in both animals and humans.

Gallium-67 decays by electron capture with the emission of four main gamma rays of 93, 185, 300, and 394 keV with intensities of 42, 24, 17, and 5%, respectively.

Four weekly shipments of 100-mCi batches of gallium-67 citrate were supplied to ORAU during this period as part of the Cooperative Group to Study Localization of Radiopharmaceuticals (CGSLR) project, with minor fractions of each batch being packaged as the chloride and supplied to others. Two of these production runs were plagued by premature target failure of the extruded zinc tube target design in current use. No new development work was performed on the electrodeposited zinc-on-copper target design during this period, but additional work will be done during February.

2. Indium-111

The objectives of this program have been to define and optimize the pertinent production parameters for the economical production of indium-111 of satisfactory quality for radiopharmaceutical manufacture. The current objectives are to obtain practical operating experience of the procedures developed by pilot production and to provide this radionuclide to interested customers as a special research material — in batch lots — for their evaluation. Indium-111 has been suggested for such studies as spinal-cerebral cisternography, aerosol lung studies, delayed brain scanning, visualization of the lymphatic system, metabolic studies of indium-labeled macroaggregates and colloids, and tumor localization. Indium-111 has gamma emissions of 173 keV (89%) and 247 keV (94%) ideally suited for external detection and an optimal half-life (2.83 days) for labeling and distribution studies which must be carried out over 24 hr or longer.

Three batches of indium-111 were prepared, and portions were supplied to medical researchers as a special research material. An article for the literature describing the production experience and preparation of carrier-free indium-111 suitable for human use via the (p,n) production path is "in press" and should appear soon. Data pertaining to preparation of this radionuclide via the (p,n) reaction will no longer be reported here. As new development work on alternative production paths is undertaken, e.g., preparation via the $^{112}Cd(p,2n)^{111}In$ reaction path, it will be reported. A final topical report will be prepared after the feasibility of production via the (p,2n) reaction path has been determined.

B. Accelerator Products Pilot Production (Production and Inventory Accounts)

Table 3 gives the January 1972 accelerator runs for ORNL and non-ORNL programs.

Table 3. Accelerator Irradiations and Runs for January 1972

Product	No. of Runs	Time (hr:min) Beam	Misc.	Total	Total Charges
		ORNL Programs			
Cobalt-61	5	10:20	3:40	14:00	$1,364
Gallium-67	3	9:35	3:15	12:50	1,354
Cesium-129	1	2:00	1:00	3:00	305
Indium-111	3	13:30	3:15	16:45	1,687
Total					$4,710
		Non-ORNL Programs			
Cobalt-57	1	50:00	1:15	51:15	$8,495
Technetium-95m	1	1:00	1:15	2:15	510
Total					$9,005

FISSION PRODUCTS - 08-01-03

A. Krypton-85 Enrichment

Operation of all krypton units was routine. A total of 6.6 liters of decontaminated fission xenon was removed from unit AB (see Fig. 1) in four separate cuts. Samples have been sent to the analytical laboratory for determination of the krypton-85 contamination and of the presence of any other element or compound, but these results have not yet been received. Unit AB will be recharged with new fission xenon for another run.

Unit	Activity in Unit (Ci)	Time Since Last Product Removal (days)	Count Rate in Product Section (counts/min) Dec. 1971	Jan. 1972
A	264	190	4,650	5,250
AB	Xenon	0	—	—
B	264	190	3,950	6,850
C	1737	45	4,100	4,750
CD	2269	150	14,850	15,750
D	1615	45	4,250	4,750

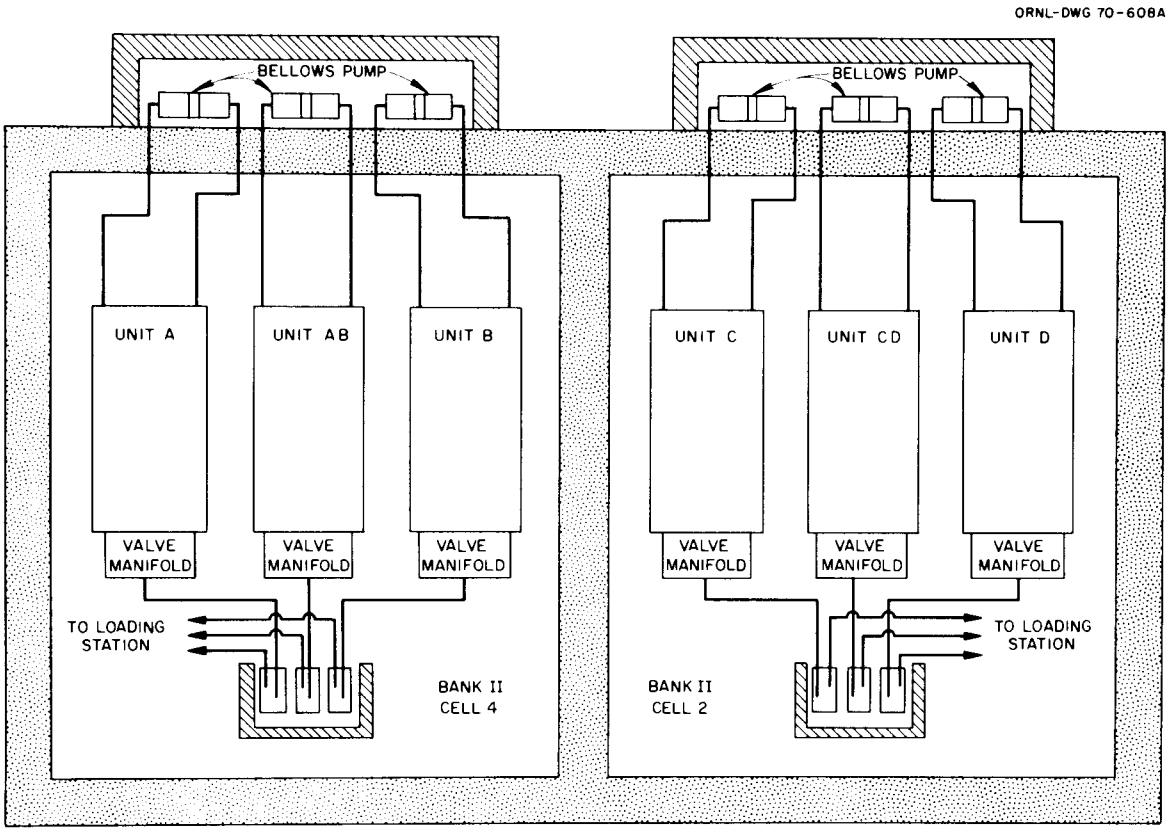

Fig. 1. Schematic Arrangement of Krypton-85 Columns.

B. Cesium-137 Pilot Production (Production and Inventory Accounts)

1. Processing and Process Status

One cleanup batch of $^{137}CsCl$ was run, yielding 7,000 Ci. Then the $^{137}CsCl$ final processing equipment was disassembled, and the cell was cleaned in preparation for another oxalate processing cycle. Final purification crystallizations were done on a fraction of 210,000 Ci of cesium-137 alum. The current cesium-137 process status is as follows:

Item	Cesium-137 (Ci)
In-process material	862,000
$^{137}CsCl$ products	81,000
Sources in fabrication	90,000
Completed sources awaiting shipment	70,900
Total	1,103,900

2. Operational Summary

Item	January 1972 No.	January 1972 Curies	FY 1972 No.	FY 1972 Curies
HAPO shipments received	0	0	1	414,200
Product batches prepared	1	7,000	19	195,000
Sources fabricated	0	0	32	50,000
Special form containers loaded	0	0	13	600
Sources shipped	0	0	16	18,620
Special form containers shipped	0	0	13	1,500

3. Current Orders

Current orders for cesium-137 as sources or bulk powder are shown below:

Customer	Amount (Ci)	Estimated Shipping Date
Brookhaven National Laboratory	203,000	FY 1972
Lockheed Georgia Company	∿35,000	a
Atomic Energy of Canada Ltd	49,700[b]	February 1972
Picker X-Ray Corporation	2,200	February 1972
Technical Operations Inc.	200	February 1972
University of Texas	4,800	February 1972
Minnesota Mining and Manufacturing	500	February 1972
Total	295,400	

[a]Sources are in storage awaiting receipt of customer's container.
[b]An order is on hand for ∿104,600 Ci as bulk powder to be scheduled and shipped as released by customer.

4. Source Fabrication

The maintenance work mentioned in the December report was completed, and source fabrication work has been resumed. At the present time a cesium-137 run is under way and should be completed during the first week in February.

C. Strontium-90 Pilot Production (Production and Inventory Accounts)

1. Processing and Process Status

The HAPO-IB cask received in December was unloaded. A valve failure occurred during the first unloading pass; therefore, it was necessary to divide the batch of strontium-90 into two tanks in roughly equal fractions. Analyses are not complete, but first results indicate that this batch contains less inert rare earths than did the previous one (rare earth/

strontium ratio 0.03 vs 0.10 on previous shipment), slightly less calcium (calcium/strontium ratio 0.01 vs 0.025), and no other inert contaminants of significance. This batch will thus provide feed corresponding in quality to that prepared by the rare-earth oxalate separation done on the previous batch, and separation should not be necessary on the new feed.

Blending of the carbonate produced in rare-earth separation test batches 3 and 4 was completed, but calcinations could not be done due to cooling water leakage from the induction heating coil of the hot press. All strontium-90 fuel materials made from "old" feeds (shipments prior to 1971) were accumulated and blended into one uniform fraction. This material (∿130,000 Ci) will be usable for sources requiring moderate power densities.

The broken water line on the hot-press required shutdown of the unit. Decontamination of the cell is in progress, with replacement of the hot press scheduled for the last week in January. After the new hot-press is installed, strontium-90 fuel processing will be resumed in order to supply fuel for a 325,000-Ci source. The current strontium-90 process status is as follows:

Item	Strontium-90 (Ci)
In-process material	1,425,000
Strontium-90 products	574,000
Sources in fabrication	0
Returned SNAP sources	341,000
Completed sources awaiting shipment	0

2. Operational Summary

Item	January 1972		FY 1972	
	No.	Curies	No.	Curies
HAPO shipments received	0	0	1	630,000
Product batches prepared	1	40,000	4	156,000
Sources fabricated	0	0	1	49,600
Special form containers loaded	0	0	0	0
Sources shipped	0	0	7	160,500
Special form containers shipped	1	500	2	600
Shipments to customers	0	0	12	45,900

3. Current Orders

Current orders for strontium-90 as sources or bulk powder are as follows:

Customer	Amount (Ci)	Estimated Shipping Date
U.S. Navy (Gulf)	31,000	February 1972
U.S. Navy (Teledyne)	324,000	April 1972
U.S. Navy (ORNL)	208,000	April 1972
Lovelace Foundation	100	March 1972
Total	563,100	

4. Source Fabrication

During January, one can containing 500 Ci of strontium-90 powder was shipped to 3M Company.

5. URIPS-8 Generators

Detailed procedures for loading and assembly of the URIPS-8 generators have been written. The generator insulation systems have been evacuated and purged with argon per the manufacturer's instructions, and the bottom covers of the shields have been caulked with epoxy caulking compound.

6. Sintering Furnace

Two companies (Lucifer Furnace and E. B. Blue) have been asked to submit feasibility proposals on building a sintering furnace for use at FPDL which meets the following specifications:

Inside dimensions	5 in. ID by 13 in.
Outside dimensions	11 in. OD maximum by length required
Maximum temperature	1400°C
Operating temperature	1300°C
Normal period of operation	8 hr
Maximum surface temperature (without blowers)	115°C

Both companies indicated that a furnace with these specifications could be built using Zircar (fibrous zirconia) insulation. They foresaw a problem of meeting the surface temperature specification of 115°C without a blower. We told them water cooling would be acceptable if that were the only means of meeting the specification. Preliminary estimates of the furnace cost, including controls, were $3700 to $4800.

7. Shielded Manipulator Remover

It is proposed to use bootless manipulators that seal against leakage within themselves to eliminate boot failure maintenance, which represents about 60% of cell downtime for manipulator repairs. However, their use also introduces the possibility that the slave end (in-cell end) of the manipulator will have a high level of contamination which would complicate their removal from the cell for repairs. A shielded manipulator remover is being designed to facilitate removal of these manipulators. This remover is presently conceived as a length of 10-in.-diam schedule 60 mild steel pipe approximately 12 ft long with a winch at one end to withdraw the slave end of the manipulator after the master end (out-of-cell end) has been removed and the tapes have been clamped. A preliminary design of the remover is expected to be completed during February.

D. Short-Lived Fission Products Pilot Production (Production and Inventory Accounts)

Isotope	Number of Batches	Amount (Ci)
Xenon-133	2	∿700
Iodine-131	1	20
Barium-140	1	3
Strontium-89	1	30

E. Promethium-147 Source Fabrication, Powder Shipments, and Current Orders

Atomic Energy of Canada, Ltd's order for 1,000 Ci of promethium-147 as bulk powder is expected to be shipped in February 1972.

SOURCE DEVELOPMENT - 08-01-04

A. Strontium-90 Beta Sources

Two strontium-90 beta sources each with an active area of 20 by 40 cm have been designed to yield a beta radiation dose of approximately 3000 R/hr at a distance of 3 in. from the face of the source. The source capsules are made of graphite and aluminum to reduce the amount and the energy of the bremsstrahlung radiation. Strontium-90 nitrate absorbed* from solutions into a 1/16-in.-thick sheet of graphite is decomposed by heating to provide a strontium oxide deposit in the graphite matrix. The window covering of the radioactive area is 12-mil-thick aluminum, and the source backing is 1/2-in.-thick aluminum. A sliding shutter of 1/2-in.-thick aluminum shields the source when it is not in use.

Two such sources, directed toward each other, are expected to provide a nearly homogeneous beta radiation field with a minimum amount of bremsstrahlung radiation.

Brookhaven National Laboratory will use these sources to determine the effect of beta radiation on plant growth.

B. Gadolinium-153

Several gadolinium-153 sources were made during the month. The gadolinium-153 required to satisfy these commitments depleted our target inventory, and work to replenish this inventory is underway. During this semiroutine processing, new ideas directed toward improving yields and product purity are implemented. One improvement eliminates the formation of lithium carbonate (CO_2 produced by anode oxidation of the acetate and citrate ions) in the electrolyte containing the rare earths. In the past, this precipitate interfered with the gadolinium/europium separation, and the process had to be terminated because of an excessive quantity of solids in the

electrolyte. We are now using a two-compartment cell, anode and cathode, separated by a sintered glass membrane. Lithium citrate solution containing a mixture of gadolinium/europium to be separated is placed in the cathode section and lithium citrate solution only is placed in the anode section. While large quantities of precipitate are formed in the anode section of the separation equipment, the cathode section remains free of precipitate. This new cell has been used in only one separation run; however, the results are very promising.

C. Tellurium-123m

Tellurium-123m is produced by neutron irradiation of enriched tellurium-122 (96.2%) with a product purity of >99%. The major contaminants are other tellurium radioisotopes and iodine-131, produced from the small amount (0.81%) of tellurium-130 present in the target material. Tellurium-123m (120 days) decays by isomeric transition and emits 160-keV gamma rays with an abundance of 84%.

Although the present demand for this radioisotope is limited primarily to the development of a technique for gathering information concerning electron distribution in matter by Compton scattering measurements, the simple spectrum should make the radioisotope useful for many other applications. One reason that tellurium-123m has not been used in the past is because of the low yield (1 mCi/mg of target). The cost per curie (target plus irradiation) is approximately $3,000. Efforts to improve this yield by changing irradiation times, target size, and reactors (different energy spectrum) have not been successful; however, the various irradiations have made it possible to calculate cross sections. Table 4 shows the results of these irradiations.

The cross-secton values for the target isotope tellurium-122 and the product isotope tellurium-123m are listed in Table 5.

Table 4. Results from Tellurium-122 Irradiations

Target Weight (mg)	Neutron Flux ($n/cm^2.sec$)	Time (days)	Yield of Tellurium-123m
1000[a]	$\sim 2 \times 10^{14}$	21	1 mCi/mg
100	$\sim 1 \times 10^{15}$	3	1 mCi/mg
3	2.46×10^{14}	7	0.68 mCi/mg
3[b]	1.94×10^{13}	7	0.43 mCi/mg
1	9.02×10^{11}	40 min	1.46×10^{4} dpm
5[b]	$\sim 2 \times 10^{13}$	21	0.728 mCi

[a]Three samples, 1000 mg each.
[b]Shielded with cadmium.

Table 5. Effective and Thermal Cross-Section Values for Tellurium-122 and Tellurium-123m

Isotope	Cross Section (barns)		Resonance Integral (barns)
	Effective[a]	Thermal	
Tellurium-122	0.60	0.29 ± 0.03	4 ± 0.4
Tellurium-123m	8,000	5,500 ± 700	32,250 ± 4,000

[a]In ORR.

D. Dose Rate Measurements with Extrapolation Chamber

The first phase of a beta radiation measurement study was completed. The objective of this study was to determine accurately the surface dose rate from beta sources using the extrapolation chamber and to compare it with the same measurement made with thermoluminescent dosimeters and with Fricke solutions. An ionization chamber such as the extrapolation chamber will measure the surface dose rate of a source only when the source diameter is large enough to produce a uniform radiation field encompassing the sensitive volume of the ionization chamber. The minimum source size necessary to meet this requirement was determined from a series of extrapolation chamber measurements of sources of different diameters made from the original larger source.

The experimental source was fabricated by incorporating strontium-90 chloride in a thin uniform layer of a vinyl plastic (polyvinyl acetate) to form a sheet of plastic, 4 × 4 × 0.030 in. This plastic sheet was covered with a thin filter paper on the top side and a thin aluminum sheet (0.008 in.) fastened to the bottom side with double adhesive masking tape. This source, which could be cut and handled with minimum contamination, was cut into four 2 by 2 in. square sections.

One 2 by 2 in. section was measured for uniformity using the extrapolation chamber equipped with a 3-mm-diam collecting electrode. The measurements were normalized with the source center measurement since this was the highest value. The drop in the normalized measurements from the center to the outside corners is not an indication of lack of source uniformity, but is caused by the change in radiation field near the source edge. A comparison of the corner measurements (91.4, 92.6, 89.4, and 89.4% of center reading) or members of any other set of measurements in similar locations can be used to determine the source uniformity. A variation from the highest outside corner value (92.6) to the lowest (89.4) is 3.45% of the higher value. The greatest variation exists in the measurements made in the outside rows next to the corners. The lowest value of 92.3 versus the highest value of 96.9 represents a variation of [(4.6/96.9) × 100 = 4.7] 4.7%.

After the uniformity of active material in the 2 by 2 in. square source was established, measurements were made using 3-, 10-, and 30-mm-diam electrodes to determine the effect of the electrode-to-source area relationship. For comparison of measurement techniques, lithium fluoride dosimeter rods (1 mm by 6 mm long) were placed on the center of the source. A 1-3/4-in.-diam disk cut from the 2 in. square was used in the above described measurement. This disk was reduced in diameter in 1/4-in. steps to a final diameter of 1/4 in., and dose rate measurements were made on each increment (Table 6).

Table 6. Dose Rate, Source Size, and Measuring Methods

Source Diameter (in.)	Dose Rate (rads/hr)					
	3-mm diam	10-mm diam	30-mm diam[a]	30-mm diam[b]	TLD	Fricke Solution
2 by 2 in.^{2}	202.6	199.2	202.7	70.7	45.6	206.0
1-3/4	205.5	199.1	198.3	89.4	54.5	
1-1/2	198.6	197.2	193.2	118.2	51.0	
1-1/4	195.1	190.0	179.5	158.5	52.8	
1-3/16			168.7	168.7		
1	182.6	182.1	126.9	175.0	51.0	
3/4	180.8	170.4	81.5	199.8	49.7	
1/2	153.1	145.9	36.2	199.8	39.7	
1/4			8.96	197.4		

[a]Dose rate based on sensitive volume of the ionization chamber as defined by electrode area.
[b]Dose rate based on sensitive volume of the ionization chamber as defined by source area.

A plot of dose rate versus source size is shown in Fig. 2. A relatively constant dose rate value of approximately 200 rads/hr for sources of greater than 1-1/2-in. diameter was obtained using the 3- and 10-mm-diam electrodes. The dose rate defined by the plateau section of the curve is assumed to be the source surface dose rate.

Dose rate versus source size is also plotted for the 30-mm-diam electrode. The slope of this curve indicates that a constant plateau value of dose rate (based on collector electrode area) was not obtained for the range of source sizes used. However, when the sensitive volume used to calculate the dose rate was based on the source diameter, as represented by the dotted line (Fig. 2) instead of the collector electrode diameter, a relatively constant plateau dose rate of approximately 200 rads/hr was obtained for the 3/4-, 1/2-, and 1/4-in. disks. To further check this procedure, measurements were made using 1-1/2-in.-diam and 30-mm-diam

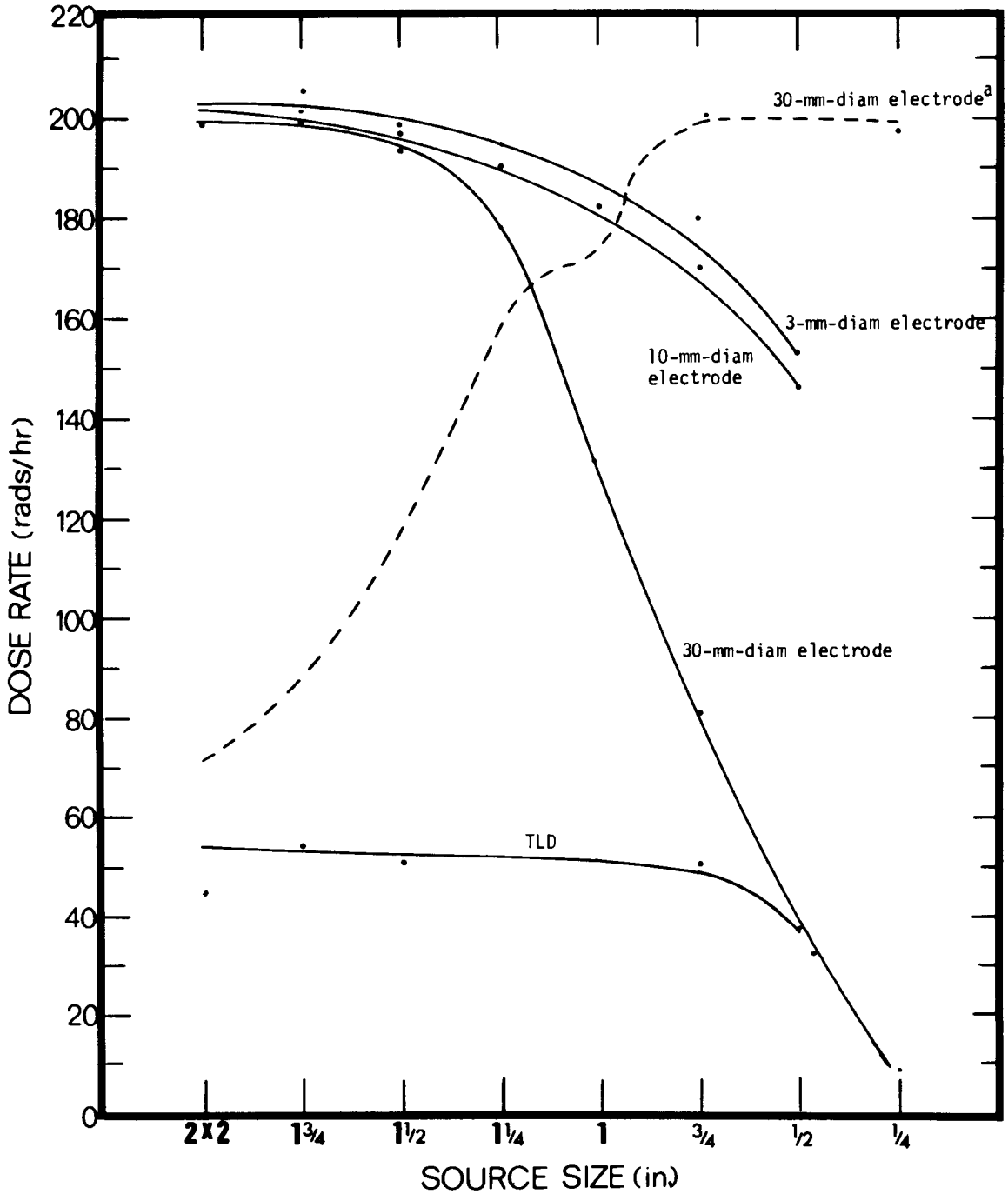

Fig. 2. Dose Rate Versus Source Size.

(a. Dose Rate based on sensitive volume of the ionization chamber as defined by the source area. Solid curves are based on electrode area.)

collecting electrodes. The sources used for these measurements were a 1/2-in.-diam disk, a 1/4-in.-diam diak, a 1/2-in.-diam disk with a 1/4-in.-diam center hole, and a rectangle (9/32 in. by 33/64 in.). When small disks (1/2 in. or smaller) are cut from the parent source material the radiation from the newly exposed source edge represents a significant percentage of the total radiation output and produces an error in the measurement of surface dose rate. For this reason it was necessary to imbed the source being measured in inactive source material to duplicate conditions as if it were still a part of the original source.

The surface dose rates measured with these two large electrodes (Table 7) are in good agreement with the values obtained using the small electrodes. These results indicate that it may be possible to develop a method to measure small sources with greater precision when electrode size and source size are properly matched than has been possible using the conventional scheme in which the collecting electrode is considerably smaller than the source.

Table 7. Dose Rate and Source Size

Source Diameter (in.)	Dose Rate (rads/hr)	
	30-mm-diam Electrode	1-1/2-in. Electrode (38.1-mm diam)
1/2	199.8	202.8
1/4	197.4	200.1
1/2[a]	191.3	192.6
9/32 by 33/64[b]	205.3	210.4

[a]With a 1/4-in.-diam center hole.
[b]Rectangle.

Surface dose rate measurements were made using Fricke solution which gave a 206-rads/hr surface dose rate, which checked very closely with the value of 200-rads/hr surface dose rate obtained with the extrapolation chamber.

Seven measurements (Table 6) made with thermoluminescent rod dosimeters (TLD) indicated a surface dose rate to be approximately 50 rads/hr. The large discrepancy between these measurements and the extrapolation chamber (200 rads) is probably due to the fact that the calibration of the TLD is made using a gamma standard (cesium-137). This discrepancy demonstrates the necessity of calibrating the TLD's with a standard beta source when beta dose rate measurements are being made.

This work has demonstrated the necessity for the application of correction factors to extrapolation chamber dose rate measurements to obtain the surface dose rate. Further studies should be made to determine the corrections necessary using beta particle energy spectra other than that

of strontium-90-yttrium-90. Additional effort should be directed towards determining the feasibility of making measurements using a large collecting electrode.

The combined use of the extrapolation chamber and thermoluminescent dosimetry calibrated on the proper beta energy may provide a good source measuring system over a wide variety of source sizes and source outputs.

A report is being drafted to publish this information in greater detail.

E. Radioisotope Characterization, Quality Control, and Standards

1. Radioisotope Characterization

Specific activities were calculated for over 160 radionuclides of present or potential usefulness. Because of lack of information on diluent stable isotopes, the specific activities of pure accelerator-produced nuclides were listed. For neutron-capture products, effects of target and product burnup were considered. At the same time, half-lives were updated. A review was made of properties and possible methods of production of 120-day tellurium-123m. A response was given to an inquiry about sources of information on characteristics of radioisotopes.

2. Radioisotope Special Analysis and Quality Control

The College of American Pathologists (CAP) is planning its program of intercomparison of measurements of radiopharmaceuticals for 1972. By request, the program and a related questionnaire were reviewed, and several suggestions were made. It is expected that NBS will supply samples, and that these will be measured locally, as well as by the CAP participants.

Some environmental statements for nuclear power plants were surveyed with respect to radioanalytical methods and standards. It is expected that our work with ASTM Committee D-19 will be useful in this field, especially since that committee is now collaborating with other societies and representatives of governmental agencies in revising previous methods and preparing new ones.

F. Radiation Processing (Not Supported by 08 Program; WFO Account)

1. Radiolytic Oxidation of Dye Waste Solution

Pollution of rivers by dye waste effluent from textile mills and dye chemical manufacturers is a serious problem. Past experimental work has shown that radiolytic oxidation of the waste solutions may be a practical method of destroying certain dyes and chemicals. The purpose of this investigation is to study and develop a method of radiolytic oxidation.

The method developed must be economically feasible. A cobalt-60 gamma radiation source is being used to irradiate samples under a high pressure oxygen atmosphere. The solutions include both individual dyes and mixtures of dyes. This work is being supported by the American Association of Textile Chemists and Colorists (AATCC) and the Environmental Protection Agency.

A batch of Direct Blue 106 dye effluent was prepared and treated in the dynamic charcoal irradiator. Samples from this run were filtered through an 0.8-μm Millipore filter media prior to color measurements. Results are shown in Table 8. The adsorption capacity of the charcoal for dye was calculated to be 32 gallons of the prepared feed.

Color removal under conditions of equilibrium (adsorption rate of dye on charcoal equal to destruction rate) is approximately 93% for the Direct Blue 106 dye effluent at a flow of 1.5 gal/hr through this system. Samples 58R and 62R are a recycle of the once-through product. The color factor of the recycle product is not significantly reduced due to the colloids that were present and could not be removed without clay treatment.

Table 8. Color and COD Removal from Direct Blue 106 Effluent by Gamma Radiolytic Treatment on a Charcoal Bed

Sample No.	Amount thru Irradiator (gal)	Time from Start of Run (hr)	Flow Rate (gal/hr)	Color Factor	% Color Removal	COD (mg/liter)
Original	—	—	—	3.80	—	182
4	7	2	3	0.137	96.4	12
7	8.5	2.5	3	0.055	98.7	a
11	12.5	4.5	2	0.132	96.5	a
15	16.5	6.5	2	0.153	96.0	12
18	18	8	1	0.110	97.1	12
21	21	9.5	2	0.154	96.0	15
24	22.5	11	1.5	0.141	93.3	14
29	25.75	13.5	1.5	0.218	94.3	a
32	28	15	1.5	0.318	91.5	a
37	31.25	17.5	1.5	0.274	92.8	a
42	34.5	20	1.5	0.245	93.5	a
47	37.75	22.5	1.5	0.245	93.5	a
52	41	25	1.5	0.293	92.3	a
58R	48.75	28.5	4	0.459	88.0	a
62R	53.75	30.5	3	0.145	96.2	a

[a]Not determined.

Twenty-four gallons of a dye house waste effluent from the J. P. Stevens Company was treated in the charcoal irradiator. The charcoal in the irradiator was exposed for 1 week to gamma radiation to destroy any Direct Blue

106 dye remaining on the charcoal from the previous run. This authentic (pH - 6.9) effluent was treated at 3- and 1-gal/hr pumping speeds in the charcoal column irradiator. The color factors and COD's are shown in Table 9. The COD was reduced from 2400 to 500-900 mg/liter. The color reduction at 3-gal/hr pumping speed was 32-54%, and at 1 gal/hr it was 56-95%.

About 14 gallons of the processed dye house waste effluent was recycled through the irradiator. The COD was reduced to 230-640 mg/liter. The color factor was reduced an additional 40-50%. In one case, the color factor was increased; however, this sample contained a colloidal suspension which had a significant effect on the measurement of light absorbance used to determine a color factor.[2]

Table 9. Color and COD Removal from Dye House Waste Effluent by Gamma Radiation Treatment on Charcoal Bed

Sample No.	Amount thru Irradiator (gal)	Time from Start of Run (hr)	Flow Rate (gal/hr)	Color Factor	% Color Removal	COD (mg/liter)
Original	—	—	—	4.684	—	2390
3	4.5	1.5	3	2.775	40.8	a
5	7.5	2.5	3	3.135	33	a
7	10.5	3.5	3	2.160	53.8	510
9	13.5	4.5	3	3.202	31.6	a
11	16.5	5.5	3	2.538	45.8	a
14	21.0	7.0	3	2.403	48.6	960
16	21.5	7.5	1	0.250	94.6	350
18	22.5	8.5	1	1.210	74.2	a
21	24.0	10.0	1	2.068	55.7	146
Second Pass[b]	—	—	—	2.587	—	a
23R	25.5	10.5	3	1.551	40.0	230
27R	31.5	13.5	3	1.310	49.2	a
31R	37.5	15.5	3	3.580	+38.0	640

[a]Not determined.
[b]Average feed after one pass through irradiator.

More dye house waste effluent will be treated by radiolytical oxidation using a finer mesh coconut charcoal (12-30 mesh), which should reduce the time required for the charcoal to adsorb dye from the solution. Also, several other batches of authentic dye waste effluent will be treated by radiolytic oxidation on charcoal. The contract with the American Association of Textile Chemists and Colorists for work on industrial dye effluents will terminate in February.

[2]A. F. Rupp, *Radioisotope Program (8000) Progress Report for December 1971*, ORNL-TM-3677, Oak Ridge National Laboratory.

TECHNOLOGY UTILIZATION - 08-01-05

A. Information Center

In January, 53 requests for information were filled by dispatching 74 items. Translations were made of seven sales letters, and pertinent abstracts were selected from NSA for distribution to AEC's Division of Applied Technology (DAT) and to Isotopes Division personnel for current awareness. Drafts of six industry briefings were sent to DAT. Accessioned documents in the Center now total 23,700. A list of reviews is shown on page 20.

B. Isotopes and Radiation Technology

Isotopes and Radiation Technology 9(2) was published and the manuscript for 9(4) was completed and sent to TIC.

C. Publications

Roberta Shor, R. H. Lafferty, and P. S. Baker, *Elementary Teaching Experiments Using Radioisotopes. A Bibliography and Index*, ORNL-IIC-23 (January 1972).

F. E. McKinney, *Radiation Pasteurization of Fruits and Vegetables. A Bibliography*, ORNL-IIC-11 (Rev.) (January 1972).

P. S. Baker, A. F. Rupp, and Associates, *Isotop. Radiat. Technol.* 9(2) (Winter 1971-1972).

Articles published in *Isotopes and Radiation Technology* 9(2) (Winter 1971-1972):

R. E. Greene	The Chemistry of the Electromagnetically Separated Stable Isotopes
R. E. Greene (summarized)	Xenon-128 Production Process Development
F. E. McKinney (summarized)	Wholesomeness of Irradiated Food, Especially Potatoes, Wheat, and Onions
F. E. McKinney (summarized)	Effects of Low-Level Irradiation on the Preservation of Fruit: A 7-Year Summary
Martha Gerrard (summarized)	Ezeiza Semi-Industrial Irradiation Plant
Martha Gerrard (summarized)	Cobalt-60 Use in Thermoelectric Generators
Martha Gerrard (summarized)	SNAP-21

Title	Author(s)	Status (% Complete)
Radioisotope Briefings for Industry		
Aerospace	Helen P. Raaen	To DAT for Approval
Building	F. E. McKinney	5
Coal	R. H. Lafferty	To DAT for Approval
Food	F. E. McKinney	To DAT for Approval
Minerals	R. H. Lafferty	To DAT for Approval
Paint	R. E. Greene	10
Petrochemicals	H. P. Raaen	50
Plastics	R. E. Greene	To DAT for Approval
Pulp and Paper	Martha Gerrard	50
Stone, Clay, and Glass	R. H. Lafferty	5
Textiles	Martha Gerrard	To DAT for Approval
State-of-the-Art Reviews		
Iodine-125	Martha Gerrard and P. S. Baker	In Reproduction
Technetium-99m: Preparation and Uses	Martha Gerrard and P. S. Baker	65
Radioisotopes in the Textile Industry	F. J. Miller and P. S. Baker	In Reproduction
Self-Diffusion in Liquids	F. J. Miller	75
Grain Disinfestation	F. E. McKinney	20
Snow Gaging and Water Management	U. S. Department of Agriculture	Not Recieved
Radioelectrochemistry	Helen P. Raaen	90
The Environment and Isotopes	Helen P. Raaen	99
Semiconductors	Helen P. Raaen	20
Patent Literature on Process Radiation and Irradiator Design, Part 2. British and Canadian Patents, 1950 through 1970	R. E. Greene, Helen S. Warren and P. S. Baker	57
State-of-the-Art Reviews for Isotopes and Radiation Technology		
Radioisotopes in the Steel Industry, Part 3	Republic Steel	Not Received
Potato Sprout Inhibition by Radiation, Part 2	F. E. McKinney	50
Other Reports		
Selected Abstracts of World Literature on Production and Industrial Uses of Radioisotopes, Part 3 and 4 of 1971	Martha Gerrard and P. S. Baker	90
Use of Isotopes in Monitoring and Control of Environmental Pollution	W. E. Mott and Martha Gerrard	90
Special Sources (supplement)	F. E. McKinney	80
Bibliography of DID Contractor Publications	P. S. Baker	95
Isotope Education Experiments (Advanced)	Roberta Shor, R. H. Lafferty, and P. S. Baker	60
List of AEC Radioisotope Customers, FY 1971	Ruth Curl (compiler)	In Reproduction
Translations		
Presowing Irradiation of Seed (Russian book)	Martha Gerrard	50
Russian Food-Irradiation Conference	Martha Gerrard and P. S. Baker	25

RADIOISOTOPE SYSTEMS DEVELOPMENT

OCEANOGRAPHIC AND NATURAL RESOURCES DEVELOPMENT - 08-03-02

A. Sand Transport Study

Radionuclides appear to be useful tools to study sand transport phenomena and, although many experiments have been conducted to demonstrate their effectiveness as tracers, little is known concerning whether or not the dynamic systems in which they are used can be tagged well enough to achieve quantitative data leading to an understanding of basic mechanisms. The Radioisotope Sand Tracing (RIST) study has progressed through equipment development to the point where important system tagging parameters can be studied.

RIST technical service unit design and fabrication is 90% complete. Interfacing to a PDP-8 is not complete because this was an add-on feature incorporated after ORNL successfully operated a PDP-8 on board a LARC during radiation surveys. Field testing of the unit is scheduled in May and by that time the unit will be completed, including the laboratory test.

Good circuit design and a specially designed power supply have resulted in full operation capability in excess of 8 hr with only one 12-V automotive type battery. Conventional type electronics would require four batteries for a 6-hr period. A minimum of internal connectors was used to avoid most of the problems encountered with the original system. All the logic boards in the data collection portion are hardwired together and are mounted in a unique manner which allows servicing by opening the card stack like a book.

Figure 3 is a photograph of the face of the unit. All the nuclear electronics are contained in the left-hand portion of the unit; this section can be removed and run separately if required. Connections to the data collection portion are through environmental-rated BNC type connectors. One advantage of this unit is the visual instantaneous display of the single channel (2) outputs on logarithmic panel meters. Operation of the data collection portion is as simple as possible. All operational connections are made via the rear panel.

PHOTO 0273-72

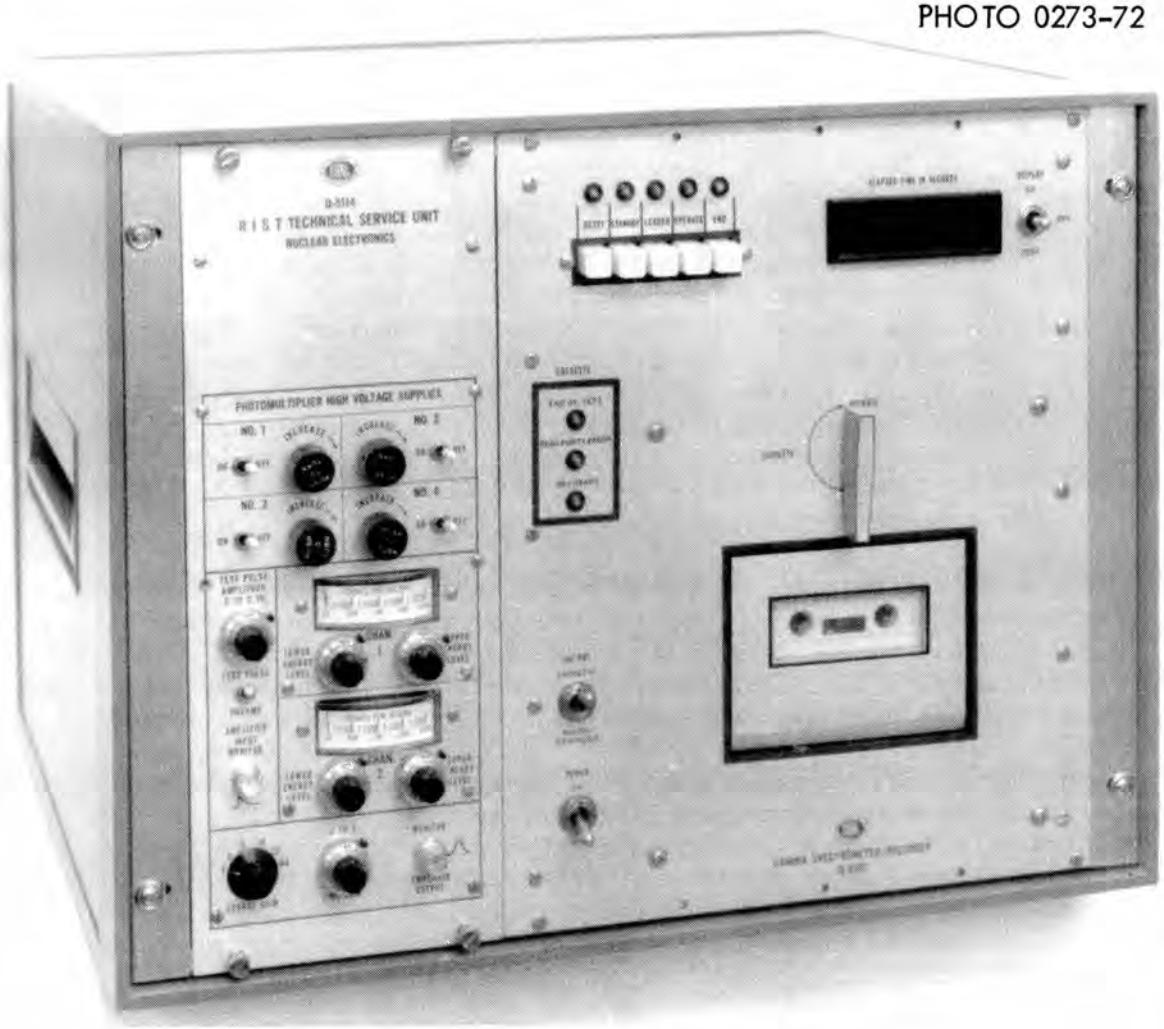

Fig. 3. RIST Technical Service Unit.

RADIOISOTOPE SALES

An order was received from Donald W. Douglas Laboratory for 151,000 Ci of promethium-147. A request for quotation was received from Donald W. Douglas Laboratory for 151,000 Ci, 500,000 Ci, and 1 MCi of promethium-147 having low promethium-146. An order was received from U.S. Army, Natick Laboratories for 1.4 MCi of cobalt-60 in the form of Mark II strips having specific activity of 250 Ci/g. An order was received from Radiochemical Centre for 30,000 Ci of tritium. An order was received from University of Texas for a 4,800-Ci cesium-137 source.

Shipments made during the month include 4,000 Ci of tritium to New England Nuclear Corporation, 30,000 Ci of tritium to Radiochemical Centre, England, 2,501 Ci of promethium-147 to Minnesota Mining and Manufacturing Company, and 9,175 Ci of strontium-90 loaned to Douglas Aircraft Corporation.

The radioisotope sales proceeds and shipments for the first six months of FY 1971 and FY 1972 are given in Table 10.

Table 10. Radioisotope Sales and Shipments

Item	July thru December 1970	July thru December 1971
Inventory items	$276,859	$234,141
Major products	66,390	30,122
Radioisotope services	165,522	133,600
Cyclotron irradiations	71,986	78,231
Miscellaneous processed materials	37,821	32,279
Packing and shipping	43,850	36,340
Total Income	$662,428	$544,713
Number of Shipments	1,646	1,256

ADMINISTRATIVE

Visitors to the IDC and travel by IDC personnel are given in Tables 11 and 12.

Table 11. IDC Visitors

Visitors' Affiliations	Subject Discussed
Sanders Nuclear and Isotopes, Inc.	Curium-244 program
Vanderbilt University	Production of radioisotopes, particularly europium-149
New England Nuclear Corporation	ORNL 86-Inch Cyclotron
Water Purification Company	Use of radioisotopes in sewage disposal
Dartmouth	Possible training program in collaboration with ORAU and ORNL
Nuclear Industry	Article on radioisotope business

Table 12. Travel by IDC Personnel

Site Visited	Purpose of Visit
Vanderbilt University Nashville, Tennessee	To conduct holmium-166m experiment and write technical papers
AEC, Washington, D. C.	Discussion of isotopes program

PUBLICATIONS

REPORTS

Eugene Lamb, *Isotopic Power Fuels Monthly Status Report for December 1971*, ORNL-TM-3691, Oak Ridge National Laboratory.

A. F. Rupp, *Radioisotope Program (8000) Progress Report for December 1971*, ORNL-TM-3677, Oak Ridge National Laboratory.

INTERNAL DISTRIBUTION

1. M. A. Baker
2. P. S. Baker
3. E. E. Beauchamp
4. G. E. Boyd
5-7. T. A. Butler
8. F. N. Case
9. W. R. Casto
10. J. A. Cox
11. F. L. Culler
12. W. C. Davis
13. J. S. Drury
14. J. H. Gillette
15. H. R. Gwinn
16. R. F. Hibbs
17. K. E. Jamison
18. Lynda Kern
19. E. H. Kobisk
20. E. Lamb
21. R. E. Leuze
22. J. L. Liverman
23. L. O. Love
24. W. S. Lyon
25. R. E. McHenry
26. H. H. Nichol
27. W. W. Parkinson
28. J. J. Pinajian
29. M. E. Ramsey
30. S. A. Reynolds
31-32. R. A. Robinson
33. D. A. Ross
34. A. F. Rupp
35. R. W. Schaich
36. A. H. Snell
37. K. A. Spainhour
38. M. R. Skidmore
39-40. H. F. Stringfield
41. D. B. Trauger
42. A. M. Weinberg
43. J. C. White
44-45. Central Research Library
46. Document Reference Section
47-51. Laboratory Records Department
52. Laboratory Records - RC

EXTERNAL DISTRIBUTION

53. G. A. Andrews, ORAU, Medical Division, Oak Ridge, Tennessee
54. Hal Atkins, Brookhaven National Laboratory, Upton, New York
55. D. S. Ballantine, AEC, Washington, D. C.
56-59. R. F. Barker, AEC, Washington, D. C.
60. N. F. Barr, AEC, Washington, D. C.
61. O. M. Bizzell, AEC, Washington, D. C.
62. C. R. Buchanan, AEC, Washington, D. C.
63. R. L. Butenhoff, AEC, Washington, D. C.
64. T. D. Chikalla, PNL, Richland, Washington
65. D. F. Cope, AEC Site Representative, ORNL
66. J. C. Dempsey, AEC, Washington, D. C.
67. W. K. Eister, AEC, Washington, D. C.
68. E. E. Fowler, AEC, Washington, D. C.
69. J. D. Goldstein, AEC, Washington, D. C.
70. A. Gottschalk, Argonne Cancer Research Hospital, Chicago, Illinois
71. F. D. Haines, AEC, Washington, D. C.
72-74. J. E. Hansen, PNL, Richland, Washington
75. W. D. Holloman, AEC, Washington, D. C.
76. J. W. Irvine, MIT (Consultant)
77. J. Lawrence, Lawrence Radiation Laboratory, Berkeley, California
78. J. E. Machurek, AEC, Washington, D. C.
79. J. N. Maddox, AEC, Washington, D. C.
80. J. C. Malaro, AEC, Washington, D. C.
81. W. E. Mott, AEC, Washington, D. C.
82. J. A. Powers, AEC, Washington, D. C.

83. G. J. Rotariu, AEC, Washington, D. C.
84. B. A. Ryan, AEC, Richland, Washington
85. W. D. Sandberg, AEC, Aiken, South Carolina
86. R. W. Shivers, AEC, Washington, D. C.
87. F. J. Skozen (Krizek), Argonne Cancer Research Hospital, Chicago
88. P. E. Smith, ARHCO, Richland, Washington
89. L. G. Stang, Jr., BNL, New York
90-95. D. H. Turno, SRL, Aiken, South Carolina
96. A. R. Van Dyken, AEC, Washington, D. C.
97. Laboratory and University Division
98-99. Division of Technical Information Extension