CENTRAL RESEARCH LIBRARY
DOCUMENT COLLECTION

LOCKHEED MARTIN ENERGY RESEARCH LIBRARIES
3 4456 0513903 4

OAK RIDGE NATIONAL LABORATORY
operated by
UNION CARBIDE CORPORATION • NUCLEAR DIVISION
for the
U. S. ATOMIC ENERGY COMMISSION

ORNL - TM -3789

copy 44

OAK RIDGE NATIONAL LABORATORY
CENTRAL RESEARCH LIBRARY
DOCUMENT COLLECTION
LIBRARY LOAN COPY
DO NOT TRANSFER TO ANOTHER PERSON
If you wish someone else to see this document, send in name with document and the library will arrange a loan.
UCN-7969
(3 3-67)

RADIOISOTOPE PROGRAM (8000) PROGRESS REPORT FOR MARCH 1972

A. F. Rupp

[redacted]

NOTICE This document contains information of a preliminary nature and was prepared primarily for internal use at the Oak Ridge National Laboratory. It is subject to revision or correction and therefore does not represent a final report.

This report was prepared as an account of work sponsored by the United States Government. Neither the United States nor the United States Atomic Energy Commission, nor any of their employees, nor any of their contractors, subcontractors, or their employees, makes any warranty, express or implied, or assumes any legal liability or responsibility for the accuracy, completeness or usefulness of any information, apparatus, product or process disclosed, or represents that its use would not infringe privately owned rights.

ORNL-TM-3789

Contract No. W-7405-eng-26

ISOTOPES DEVELOPMENT CENTER

RADIOISOTOPE PROGRAM (8000) PROGRESS REPORT FOR MARCH 1972

A. F. Rupp

Work Sponsored by
AEC Division of Applied Technology

APRIL 1972

OAK RIDGE NATIONAL LABORATORY
Oak Ridge, Tennessee 37830
operated by
UNION CARBIDE CORPORATION
for the
U.S. ATOMIC ENERGY COMMISSION

LOCKHEED MARTIN ENERGY RESEARCH LIBRARIES
3 4456 0513903 4

TABLE OF CONTENTS

Page

RADIOISOTOPE PRODUCTION AND MATERIALS DEVELOPMENT 1

REACTOR-PRODUCED ISOTOPES - 08-01-01 1

A. Biomedical Radioisotopes 1

1. Phosphorus-33 1
2. Potassium-43 2
3. Platinum-195m 3

B. Radioisotopes of Nickel 4

1. Nickel-56 4

C. Reactor Products Pilot Production 5

ACCELERATOR-PRODUCED ISOTOPES - 08-01-02 5

A. Biomedical Radioisotopes 5

1. Gallium-67 5

B. The Rare-Earth Radionuclides 6

1. Promethium-144 7

C. Accelerator Products Pilot Production 7

FISSION PRODUCTS - 08-01-03 8

A. Krypton-85 Enrichment 8

B. Cesium-137 9

C. Cesium-137 Pilot Production 10

1. Processing and Process Status 10
2. Operational Summary 10
3. Current Orders 10
4. Source Fabrication 11

D. Strontium-90 Pilot Production 11

1. Processing and Process Status 11
2. Operational Summary 13
3. Current Orders 13
4. Source Fabrication 13
5. URIPS-8 Generators 14
6. Strontium Pellet Fabrication Development 14

Page

D. Short-Lived Fission Products Pilot Production 15

E. Promethium-147 Source Fabrication, Powder Shipments, and Current Orders 15

SOURCE DEVELOPMENT - 08-01-04 15

A. Gadolinium-153 15

B. Alpha Source Survey 15

C. Krypton-85 Source for NaK Flow Measurements 16

D. Radioisotope Characterization, Quality Control, and Standards 16

1. Radioisotope Characterization 16
2. Radioisotope Special Analysis and Quality Control . . 16

RADIOISOTOPE SYSTEMS DEVELOPMENT 17

OCEANOGRAPHIC AND NATURAL RESOURCES DEVELOPMENT - 08-03-02 . 17

A. Sand Transport Study 17

RADIOISOTOPE SALES 17

ADMINISTRATIVE 20

PUBLICATIONS 21

JOURNALS 21

REPORTS 21

PATENTS 21

RADIOISOTOPE PROGRAM (8000) PROGRESS REPORT FOR MARCH 1972

A. F. Rupp

RADIOISOTOPE PRODUCTION AND MATERIALS DEVELOPMENT

REACTOR-PRODUCED ISOTOPES - 08-01-01

A. Biomedical Radioisotopes

1. Phosphorus-33

The purpose of this project is to develop methods of preparing hundred-millicurie quantities of carrier-free phosphorus-33 containing $\leq$ 5% phosphorus-32. The two methods for producing phosphorus-33 being evaluated are based on the irradiation of highly enriched targets of sulfur-33 (>92 at. %) or chlorine-36 (approximately 63 at. %) in a fast neutron flux. Phosphorus-33 (25.2 days; 0.248-MeV β^-_{max}) has both a longer half-life and a lower energy beta than phosphorus-32 (14.3 days; 1.709-MeV β^-_{max}), which makes it advantageous for autoradiography, longer ecological and agricultural experiments than with phosphorus-32, synthesis of tagged complex organophosphorus compounds, and double labeling experiments.

A target consisting of 1.06 g 69% enriched $K^{36}Cl$ was processed and a yield of over 700 mCi phosphorus-33 was placed in Sales inventory. Some difficulty was encountered in the processing with a tendency of the phosphorus-33 to stick to the cation column on the final cleanup after methyl isobutyl ketone (MIBK) extraction of the iron. The phosphorus-33 could only be removed using a stronger acid strength than usual, and the first product obtained contained almost 5 mg total solids per milliliter. The phosphorus-33 was reprocessed by repeating the $Fe(OH)_3$ precipitations and using freshly preequilibrated MIBK and a different AG50W-X8 cation batch. This seemed to eliminate the problem and the final product contained only 0.25 mg total solids per milliliter, which is in the range of a typical product. The first cation exchange batch used is suspect and will be checked further. Orders totaling greater than 200 mCi phosphorus-33 were filled from this product batch.

The $K^{36}Cl$ target was found to contain cesium-134 which creates an unnecessary radiation hazard. It occurs as a result of activation of traces of natural cesium in the target. This was removed by shaking 1 g of ammonium phosphomolybdate (AMP) with the target solution and filtering through a fine fritted glass filter. The AMP has a high selectivity for cesium and eliminated the problem. An iron hydroxide precipitation was made to remove any traces of phosphate arising from the AMP. In the future, the potassium

added to the target when the potassium-40 is separated will be treated in this way to remove cesium traces before activation. The 69% chlorine-36 was blended with 52% chlorine-36, and 1.19 g $K^{36}Cl$ with an enrichment of approximately 65% was recovered and made up for future irradiation.

2. Potassium-43

The objectives of this project are: to prepare potassium-43 by the $^{43}Ca(n,p)^{43}K$ reaction, using isotopically enriched ^{43}CaO targets, in quantities sufficient for medical and biological experiments; to define a method for separating potassium-43 from the target in a purity suitable for medical use; and to establish cooperative programs with medical institutions interested in evaluating its usefulness. Potassium-43, with a half-life of 22.5 hr and gamma-ray emissions of 0.373 and 0.617 MeV, is potentially useful for metabolic and clinical studies of blood flow, rejection of transplanted organs, and kidney function because the dose rate would permit multiple doses.

One batch of potassium-43 was shipped to University Hospitals of Cleveland and V.A. Center, Wood, Wisconsin. The data for the runs are summarized in Tables 1 and 2. A portion of the batch was also used to make radiation measurements to demonstrate compliance with shipping regulations.

The calcium from three targets containing 579 mg ^{43}CaO was combined and recovered. A total of 528 mg ^{43}CaO, or 91%, was recovered and two targets were made up, one containing 303 mg calcium-43, or enough to deliver 25 mCi potassium-43 in a batch. The supernate from the calcium oxalate precipitation is being loaded onto an ion-exchange column to determine if it is practical to reduce the calcium-43 losses.

Table 1. Yield of Potassium-43 from Calcium-43 Target

	Target 467
Weight ^{43}CaO (mg)	185[a]
Irradiation time (hr)	65.7
Product delivery date	3/7/72
Total product at 8:00 AM on delivery date (mCi)	
Potassium-43	14.9
Potassium-42	1.7 (11.7%)

[a]61.6% ^{43}Ca, new target, batch 136326.

Table 3. Radionuclides Found in Potassium-43 Dissolver Sample by Gamma Scanning

Radionuclide	Half-Life	Activity at Discharge[a] (mCi)	Activity Concentration at Discharge (μCi/mg of target)
		Target 467	Target 467
Potassium-43	22.5 h	36.6	200
Potassium-42	12.4 h	8.3	48
Sodium-24	15.0 h	1.1	5.5
Manganese-56	2.58 h	1.3	7
Strontium-87m	2.83 h	60.8	329
Calcium-47	4.53 d	0.33	1.8
Scandium-46	83.8 d	0.03	0.16
Scandium-47	3.38 d	0.04	2.1
Copper-64	12.8 h	0.66	3.6
Samarium-153	28.4 h	0.12	0.62

[a]Total target.

3. Platinum-195m

The objectives of this work are to develop methods for preparing platinum isotopes suitable for whole-body scanning in biological and medical experiments, to characterize the products, and to establish cooperative programs with medical research groups interested in evaluating their usefulness.

Recent medical research has shown that certain platinum compounds act as chemical therapeutic agents towards certain tumors. There is need for platinum radioisotopes as tools for investigating the therapeutic mechanism involved. Platinum-195m (4.1 d) has gamma emissions of 99 keV (12%) and 129 keV (2.8%) that make it suitable for whole-body scanning.

The decay of platinum-195m was followed for 10 days, and a half-life of 96.3 ± 0.3 hr was obtained as an average of the 99- and 129-keV photon peaks. This is somewhat shorter than the value of 4.1 days given in the *Table of Isotopes*. We determined the transition energies of the prominent peaks to be 30.89 ± 0.02, 98.90 ± 0.02, and 129.79 ± 0.02 keV using a silicon detector. The ratio of the gamma intensities (I_{99}/I_{129}) was determined to be 3.90 using both calibrated silicon and germanium detectors. We have observed three weak gamma rays with half-lives consistent with platinum-195m and energies consistent with the level scheme of platinum-195 in the *Table of Isotopes*. The observed photons and preliminary values for the relative intensities are:

E (keV)	Relative Gamma Intensity
30.89 ± 0.02	18
98.90 ± 0.02	100
129.79 ± 0.02	25.6
140.6	0.25
211.6	0.37
239.6	0.48

The presence of the 239-keV transition implies that the platinum-195m isomer decays by an unobserved low-energy isomeric transition in addition to the 129-keV isomeric transition.

B. Radioisotopes of Nickel

> Investigations involving the use of radioactive nickel tracers have been hampered by the absence of a suitable radioisotope. For the past two decades 92-year nickel-63 (0.067 MeV β^-) has been used. Because of the low energy of the emitted particles, careful and time consuming techniques have been required for the preparation of the sample.

With the availability of thermal neutron fluxes in excess of 10^{15} n/cm^2.sec, the preparation of millicurie amounts of 54.6-hr nickel-66 by successive (n,γ) reactions on nickel-64 became feasible. Nickel-66 decays by beta emission (0.20 MeV) to 5.1-min copper-66 which emits a 1.038-MeV photon (9%), thus, sample preparation can be kept to a minimum and, because of the short half-life, decontamination problems are drastically reduced.

Work on the preparation of 54.6-hr nickel-66 has been completed and published,[1] and a patent on the method of production has been issued.[2] The decay characteristics of $^{66}Ni \xrightarrow[54.6\ hr]{\beta^-} {}^{66}Cu \xrightarrow[5.10\ min]{\beta^-} {}^{66}Zn$ have been investigated in collaboration with J. H. Hamilton and his group at Vanderbilt University and have been published.[3] In addition the product was utilized by the University of Florida Metallurgy group in an application of nickel-66 in the diffusion studies in copper.[4] For the latter application the useful lifetime was about one month.

1. Nickel-56 (6.2 days)

The investigation of the preparation of 6.2-day nickel-56 was united with the aim of producing nickel-56 tracer suitable for tracer experiments covering 60 days or so. The program aim was to prepare high-purity nickel-56, characterize it, and optimize the production parameters.

Nickel-56 is also of interest in nuclear physics. The shell model, in the case of closed shell nuclei, predicts several nuclear properties very well. From the study of this nearly closed shell nucleus it may be possible to show limitations of this particular model. The decay of nickel-56 to cobalt-56 represents decay of nuclei whose number of protons and neutrons each differ by only one from the magic number 28.

---

[1] J. J. Pinajian, *J. Inorg. Nucl. Chem.* 31, 1241 (1969).
[2] J. J. Pinajian, "Production of High-Purity Nickel-66," U.S. Patent 3,573,165 (March 30, 1971).
[3] H. K. Carter, J. H. Hamilton, and J. J. Pinajian, *Phys. Rev.* 178, 1743 (1969).
[4] K. J. Anusavice, J. J. Pinajian, H. Oikawa, and R. T. DeHoff, *Trans. Metall. Soc. A.I.M.E.* 242, 2027 (1968).

The nickel-56 was produced by the $^{54}Fe(\alpha,2n)^{56}Ni$ reaction using 42-MeV alpha particles for 55 μA-hr. The absence of alpha particles at ORNL for production purposes necessitated the use of the 60-inch cyclotron at Argonne National Laboratory. Because of the temporary assignment of the investigator to N.V. Philips-Duphar Cyclotron and Isotopes Laboratories in Petten, North Holland, the investigation was continued in the Netherlands. The irradiations and chemical separations were performed in the N.V. Philips-Duphar Production Cyclotron in collaboration with A. A. van Dulmen and the gamma spectroscopy with R. W. Hollander at the Technische Hogeschool Delft in the Netherlands. Preliminary results include accurate determination of the energies and relative intensities:

E_γ (MeV)	I_γ (Relative)
158.34 ± 0.05	100.0 ± 3.0
269.48 ± 0.05	39.7 ± 1.0
480.44 ± 0.05	37.7 ± 0.6
749.95 ± 0.05	49.6 ± 0.9
811.96 ± 0.05	87.7 ± 1.0
970.26 ± 0.1	0.14± 0.03
1081.40 ± 0.1	<0.03
1561.91 ± 0.05	13.3 ± 0.6

However, the feeding to the 1450.74-keV level is found to be greater than the decay (intensities of gamma-rays of 269.48- and 480.44-keV measured and conversion electron data from literature). The acquisition, by the Delft group, of angular correlation apparatus and a high-resolution Ge(Li) x-ray detector system suggests that new experiments may resolve the 1450.74-keV level problem.

C. Reactor Products Pilot Production (Production and Inventory Accounts)

Processed Units	
Radioisotope	Amount (mCi)
Copper-67	62
Calcium-47	13

ACCELERATOR-PRODUCED ISOTOPES - 08-01-02

A. Biomedical Radioisotopes

1. Gallium-67

The objectives of this program are to determine the optimal target configuration for gallium-67 (78.2 hr) production by the $^{68}Zn(p,2n)^{67}Ga$ reaction in acceptable purity and quantity and to provide gallium-67 for clinical applications research and development. Interest in this isotope has been spurred by evidence, obtained by the Medical Division

of Oak Ridge Associated Universities (ORAU), of a high uptake of carrier-free gallium-67 by lymphoid tumors in both animals and humans.

Gallium-67 decays by electron capture with the emission of four main gamma rays of 93, 185, 300, and 394 keV with intensities of 42, 24, 17, and 5%, respectively.

Four weekly shipments of 100-mCi batches of gallium-67 citrate were supplied to ORAU during this period as part of the Cooperative Group to Study Localization of Radiopharmaceuticals project, with minor fractions of each batch being packaged as the chloride and supplied to others.

Development work on an electrodeposited zinc-on-copper target design has been continued. More than 40 electroplated targets have been prepared from various sulfate electrolyte systems during this period, with the most successful targets being test irradiated at increasingly higher proton beam currents to determine the failure point of this target design. To date targets with 8 ± 0.5-mil-thick natural zinc plates have been test irradiated at beam currents in excess of 600 μA for 1-hr duration without failure. The observed production rates have agreed well with those reported last month.[5] Two targets have also been test irradiated for longer duration (4 hr each) at 460- and 515-μA beam currents without failure to determine target life. All these test irradiation parameters will be extended until either incipient or actual target failure. The present test data indicate, based on extrapolations of the natural zinc target product rates to those for 98.5% isotopically enriched zinc-68 targets, that a conservative machine yield of ≥ 0.7 Ci of gallium-67 per hour can be achieved for this target design with only approximately 4% gallium-66 as of end of bombardment.

Additional development work will be carried out during the next reporting period using enriched zinc-68 to verify the production rates and machine yield estimates obtained from the natural zinc target data. The final target preparation procedure and testing results will be summarized when this target design development is completed.

B. The Rare Earth Radionuclides

It is becoming increasingly apparent that various insoluble compounds of rare earths (e.g., sulfides) may be extremely useful in mechanically outlining obstructions due to cancerous tissue in the capillary and lymphatic system of the body. The wide span of half-lives and gamma radiations available in this class of radionuclides which have essentially identical chemical properties allows a wide choice of nuclides.

Furthermore, many of these nuclides exhibit Mössbauer properties, again with a wide range of resonance cross

---

[5]A. F. Rupp, *Radioisotope Program (8000) Progress Report for February 1972*, ORNL-TM-3750, Oak Ridge National Laboratory, p. 6.

section, natural width, minimum observable width, and recoil energy.

In addition, the rare earths occupy a region of the chart of the nuclides where the spherical nuclei change to permanently deformed nuclei, with abrupt changes in nuclear structure properties. This transition region is particularly attractive for comparison of the observed nuclear properties to theoretical predictions.

1. Promethium-144 (363 days)

The molecular plating of promethium-144 onto thin aluminum foil was investigated in collaboration with S. J. Raman of the Nuclear Data Group in the Physics Divison at ORNL. A cylindrical Teflon cell with a flange on the lower end was held against a Teflon disk with a 2- by 23-mm opening to a brass bottom plate by a standard two-piece brass vacuum coupling. The 0.001-in. aluminum foil, mounted between the brass baseplate and the Teflon disk, served as the cathode. Platinum wire in the form of a "T" served as both the anode and the stirrer. The anode was attached to the cone of a standard 3-4 ohm, 4-in. loud speaker which was driven at 60 cycles by a 6.3-V transformer using 115-V line current. The amplitude of the oscillations was controlled by a variable 25-ohm potentiometer. The plating was made from isopropyl alcohol at 600 V with a yield of greater than 80% of the 0.8 mCi promethium-144 sample in ∿40 min. The sample, showing good integrity, was shipped to J. C. Manthuruthil at Wright-Patterson Air Force Base for internal conversion electron work.

C. Accelerator Products Pilot Production (Production and Inventory Accounts)

Table 3 gives the March 1972 accelerator runs for ORNL and non-ORNL programs.

Table 3. Accelerator Irradiations and Runs for March 1972

Product	No. of Runs	Time (hr:min) Beam	Misc.	Total	Total Charges
		ORNL Programs			
Cesium-129	1	1:00	1:10	2:10	$ 234
Gallium-67	11	20:20	11:30	31:50	3253
Indium-111	4	10:40	4:30	15:10	1569
		32:00	17:10	49:10	$5056
		Non-ORNL Programs			
Bismuth-207	1	8:00	1:15	9:15	Stock
Yttrium-88	1	8:00	1:15	9:15	$1380
		16:00	2:30	18:30	$1380

FISSION PRODUCTS - 08-01-03

A. Krypton-85 Enrichment

A malfunction of the float valve on the water makeup line to the cooling tower supplying cooling water to the thermal diffusion units (see Fig. 1) allowed the tower water level to drop so low that the cooling water circulation stopped. Each unit has a high-temperature switch on the water jacket however, and these protective devices operated to shut down all units. There was no damage to any equipment, but there was some remixing and loss of concentration level during the emergency shutdown. The inlet water valve has been replaced and will be put on a routine inspection schedule to prevent future trouble of this nature.

During this shutdown a water pressure switch installed to transfer from the main circulating pump to the standby pump if the water filters clog was found to be sticking and could cause trouble. This switch was replaced.

The cooling tower system and all enrichment units are now back in normal service.

Unit	Activity in Unit (Ci)	Time Since Last Product Removal (days)	Count Rate in Product Section (counts/min) Feb. 1972	March 1972
A	264	250	4,600	4,350
AB	Xenon	60	—	—
B	264	250	7,450	7,500
C	1737	105	4,550	4,450
CD	2269	210	15,300	13,100
D	1615	105	4,650	4,200

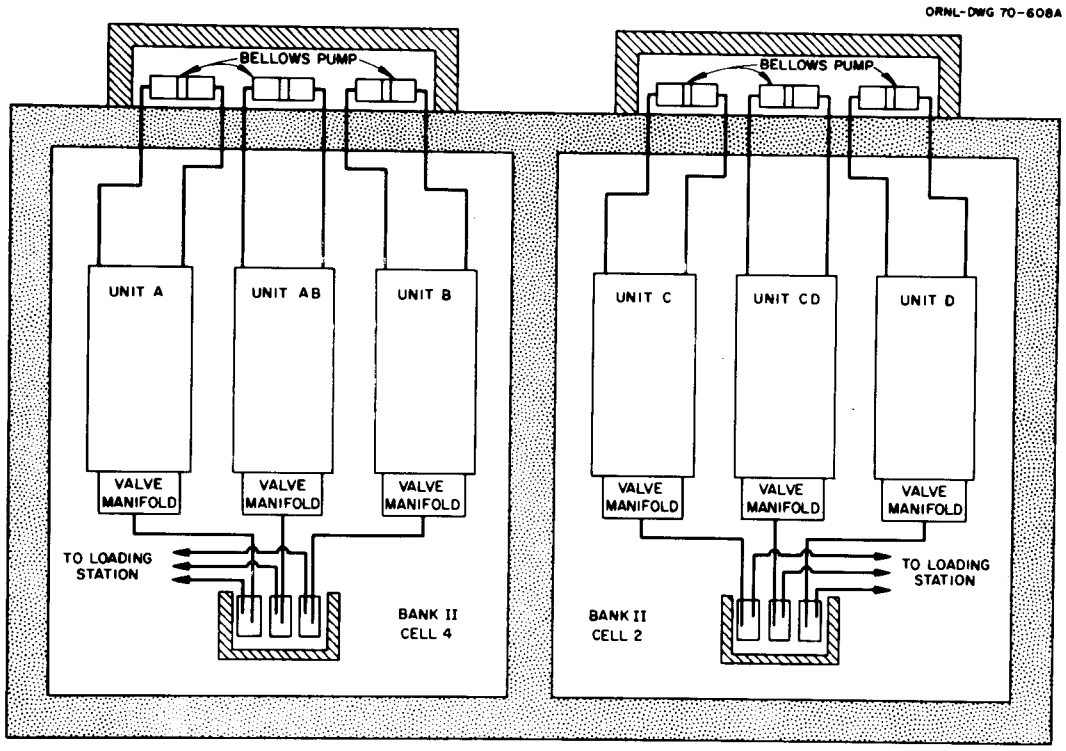

Fig. 1. Schematic Arrangement of Krypton-85 Columns.

B. Cesium-137 (30.2 years)

One of the most widely used radioisotopes for industrial application is cesium-137. The cesium-137 is produced as a fission-product waste from nuclear reactors. Uranium-235 fission produces, among other radioisotopes, three principal xenon isotopes — xenon-133, xenon-135, and xenon-137. These xenon isotopes in turn decay to the respective cesium isotopes: stable cesium-133, 2.3×10^6-year cesium-135, and 30.2-year cesium-137. They are produced in substantially equal amounts, the total production being 0.1 g cesium per 1 g of fissioned uranium-235. Moreover, in the usual situation the cesium-133 undergoes an (n,γ) reaction and produces a 2.06-year cesium-134. Consequently, any cesium product has a mixture of several isotopes; the radioisotopes represented in such a product are given below:

Radioisotope	Cesium-134	Cesium-135	Cesium-137—Barium-137m	
Half-life	2.06 y	2.3×10^6 y	30.2 y ——>	2.55 m
β^-	0.662 (71.%) 0.410 (1.%) 0.089 (28.%)	0.21 (100.%)	1.176 (6.5%) 0.514 (93.5%)	
γ (MeV)	0.4753 (1.5%) 0.5631 (8.%) 0.5692 (14.%) 0.6046 (98.%) 0.7958 (88.%) 0.8018 (9.%) 1.0384 (1.1%) 1.1677 (1.9%) 1.3650 (3.4%)			0.6616 (100.%)

Hence, the specific activity and isotopic purity of a so-called cesium-137 source are limited by these impurities.

Cesium-137, in substantially purer form, was produced by exploiting a feature of the Molten Salt Reactor Experiment (MSRE); namely, the removal of fission gas poisons, principally xenon-135, from the core of the reactor by an off-gas stream. The main xenon isotopes are 5.27-day xenon-133 (which decays to stable cesium-133), 9.16-hr xenon-135 (which decays to 2.3×10^6-year cesium-135), and 3.82-min xenon-137 (which decays to 30.2-year cesium-137). A particle trap (containing a stainless steel mesh) was removed from the MSRE, and 42 Ci of cesium-137 was recovered from it. Mass spectroscopic analysis of the cesium abundance in this material and that of currently available material[6] is given below:

	Present Work	Currently Available Product
Cesium-133	3.4%	∿32.5%
Cesium-135	38.7%	∿32.5%
Cesium-137	57.9%	∿35. %

[6]Isotopes Development Center, *Radioisotopes, Stable Isotopes, Research Materials*, Oak Ridge National Laboratory, 5th ed., 1967.

These results indicate that cesium isotopes enriched in cesium-137 can be trapped on stainless steel mesh in the off-gas line of an operating molten salt reactor. Calculations show that a 15-min holdup tank, consisting of stainless steel, placed in the fission-gas extraction line of a 200-MW molten salt reactor would produce ∿600 Ci cesium-137 per day. This material would have a specific activity of more than three times that of cesium-137 presently available and would be ∿99% that of pure cesium-137. A patent has been recently assigned to the U.S. Atomic Energy Commission for this method of production of high-purity cesium-137.[7]

C. Cesium-137 Pilot Production (Production and Inventory Accounts)

1. Processing and Process Status

No cesium-137 processing was done this month; processing is expected to resume in mid-April. The current cesium-137 process status is as follows:

Item	Cesium-137 (Ci)
In-process material	862,000
^{137}CsCl products	115,400[a]
Sources in fabrication	0
Completed sources awaiting shipment	70,900

[a]Includes 113,600 Ci holding in special form cans for customer.

2. Operational Summary

Item	March 1972		CY 1972		FY 1972	
	No.	(Ci)	No.	(Ci)	No.	(Ci)
HAPO shipments received	0	0	0	0	1	414,200
Product batches prepared	0	0	1	7,000	19	195,000
Sources						
Fabricated	1	2,000	23	55,300	55	105,300
Shipped	1	2,000	23	55,300	39	73,900
Special form containers						
Fabricated	8	113,600	10	113,900	23	114,500
Shipped	1	500	3	800	16	2,300

3. Current Orders

Current orders for cesium-137 as sources or bulk powder are shown below:

Customer	Amount (Ci)	Estimated Shipping Date
Brookhaven National Laboratory	203,000	FY 1972
Lockheed Georgia Company	∿35,000	a

[a]Sources are in storage awaiting receipt of customer's container.

[7]A. F. Rupp, J. J. Pinajian, and S. J. Rimshaw, "Production of High-Purity Cesium-137," U.S. Patent 3,635,831 (Jan. 18, 1972).

An order is on hand from Atomic Energy of Canada Limited for ∿112,000 Ci of cesium-137 as CsCl powder. The powder has been canned and stored for release by the customer.

4. Source Fabrication

The miscellaneous cesium-137 run that was in progress in February was completed, and a strontium-90 campaign is underway. A teletherapy source containing 1,968 Ci was shipped to Picker X-Ray, and 1 can containing 500 Ci of cesium-137 powder was shipped to 3M Company during March. An additional order for 113,652 Ci of $^{137}CsCl$ was canned in eight powder cans and is being held at the request of the customer (AECL).

D. Strontium-90 Pilot Production (Production and Inventory Accounts)

1. Processing and Process Status

a. Product Preparation

All of the $^{90}Sr_2TiO_4$ prepared in February plus the remainder of the $^{90}Sr_2TiO_4$ resulting from the oxalate-separated feed was used in the fabrication of pellets for the SN-100 source described below. After completion of the SN-100 fueling, strontium-90 fuel processing was resumed. Three batches totaling 100,000 Ci were processed, all by the carbonate dry-blending procedure.

b. Pellet Fabrication

Nine pellets 10 cm in diameter were pressed. Seven good pellets were obtained and used along with one of the test pellets made in February to fuel the SN-100 source. Descriptions and results of the nine pressings are given below.

SN-100-1: This pellet was pressed at 3900 psi for 1 min at 1075, 1175, and 1275°C and for 10 min at 1375°C. It was cooled while maintaining a slight "holding" pressure of 100 psi on the press assembly. The pellet broke upon ejection from the die into six roughly equal pieces, with all cracks in the axial dimension. No additonal breakage occurred, but the pieces were eventually broken for re-use. The indicated density (based on height measurements at edge of pieces) was 4.4 g/cm^3.

SN-100-2: The planned pressing sequence for this pellet was identical to that used for SN-100-1. However, while the system was at 3900-psi pressure at 1275°C, the top graphite punch broke, so the pellet was cooled and ejected. An acceptable pellet with a density of 4.2 g/cm^3 was obtained. Inspection of the hot-press showed that the bottom support piece was also broken. All spare die punches were pressure tested cold and all failed at less than 40,000 lb total force (47,000 lb total force is used on 10-cm pressings). Since all of these

graphite pieces had been made about the same time, it is thought that the stock piece of graphite from which they were machined was bad. New pieces were fabricated and tested at 60,000 lb total force before use; this testing will be done routinely in the future.

SN-100-3: A slightly lower temperature pattern was used, with 3900-psi pressings at 1000, 1100, and 1200°C (1 min at each temperature) and at 1300°C (10 min). A manipulator failure occurred before the pellet could be ejected and considerable trouble was encountered in correcting the manipulator problem. The ejection was finally done 12 hr after the die had cooled, and the pellet was found to be broken into many small pieces.

SN-100-4: At this point a total of seven pressings had been made, including test pellets, with only two usable pellets obtained. Of the other five pressings, four had yielded pellets or cracked pellets on which density measurements could be made; these averaged $\sim$4.5 g/cm^3. Since the fuel material available had an average power concentration of 0.303 W/g, an average pellet density of 4.0 g/cm^3 would be sufficient for fueling the SN-100 source. It was decided that a reduced temperature pressing combined with the use of nickel screen supports might provide a lower density, stronger pellet less susceptible to mechanical or thermal shock. Pellet SN-100-4 was pressed to 3900 psi for 1 min at 950, 1050, and 1150°C, then pressed at 3900 psi at 1250°C for 15 min and cooled without any holding pressure. A good pellet with a power density of 1.28 W/cm^3 was obtained.

Pellets SN-100-3R, 5, 1R, 6, and 7: These pellets were pressed under conditions identical to those used for SN-100-4 and good pellets were obtained in all cases. The average density of the six pellets pressed under these conditions (including SN-100-4) was 4.25 g/cm^3, the average power density was 1.25 W/cm^3, and all of the pellets were used in the SN-100 liners. No pellet breakage was encountered, but the pellets were loaded into the liners very soon after ejection and measurements had been done.

c. Fueling of SN-100 Liners

Eight 10-cm-diam pellets were loaded into two stainless steel liners for use in the SN-100 heat source. Significant pellet data are given below.

Pellet No.	Weight (g)	Height (cm)	Power (W)	Density (g/cm^3)	Power Density (W/cm^3)
SN-100-2	962	2.9	297	4.20	1.31
SN-TP-2	836	2.3	253	4.60	1.40
SN-100-4	998	2.9	287	4.35	1.26
SN-100-3R	978	2.8	286	4.45	1.30
SN-100-5	983	2.9	293	4.30	1.28
SN-100-1R	1006	3.0	311	4.25	1.32
SN-100-6	904	2.8	269	4.10	1.22
SN-100-7	896	2.9	253	3.90	1.11
Total (average)	7563	22.5	2249	(4.28)	(1.27)

All of the pellets were intact when loaded into the liners and were handled by normal manipulator tools. Each liner was kept in a water-cooled jacket until all four pellets had been loaded; then it was capped. The liners were then transferred to the Source Development Laboratory for final encapsulation.

d. Process Status

The current strontium-90 process status is as follows:

Item	Strontium-90 (Ci)
In-process material	1,110,000
Strontium-90 products	557,000
Sources in fabrication	330,000
Returned SNAP sources	341,000
Completed sources awaiting shipment	0

2. Operational Summary

Item	March 1972		CY 1972		FY 1972	
	No.	(Ci)	No.	(Ci)	No.	(Ci)
HAPO shipments received	0	0	0	0	1	660,500
Product batches prepared	3	100,000	10	385,000	13	501,000
Sources						
Fabricated	0	0	4	31,600	5	81,200
Shipped	0	0	4	31,600	5	81,200
Special form containers						
Fabricated	0	0	0	0	0	0
Shipped	0	0	1	500	2	600

3. Current Orders

Current orders for strontium-90 as sources or bulk powder are shown below:

Customer	Amount (Ci)	Estimated Shipping Date
U.S. Navy (Teledyne)	330,000	April 1972
U.S. Navy (ORNL)	208,000	April 1972
Lovelace Foundation	100	April 1972
University of California, Berkeley	10	April 1972

4. Source Fabrication

An order for approximately 323,000 Ci of strontium-90 is in progress.

5. URIPS-8 Generators

The cap seat of the URIPS-8 capsules was slightly undersized, and a minor remachining job was required to bring them within drawing specifications.

Weld test specimens for the plasma-arc welding tests were fabricated, and the test welds are in progress. Loading of the sources into the shields is expected to be accomplished during the week of April 10.

6. Strontium Pellet Fabrication Development

Several inactive pellets (2-3/4-in. diameter) were pressed during March to examine means of pressing a nickel jacket around the pellet and to thermally stabilize the pellets by the addition of small (1/8 to 1/4 in.) lengths of nickel wire to the starting powder.

The initial nickel jacketing runs were unsuccessful as the graphite die body split in both cases. There was also an interaction between the pellet and the graphite. The pellet material seemed to melt at a low temperature (<1000°C) transferring full pressure to the sidewalls of the die body.

A third pellet was pressed using the same powder in a graphite-lined TZM die body and graphite punches made from a different block of material than the first two runs. The resulting pellet was very chalky, lacked cohesion, and also reacted with the graphite.

The powder used in all three runs was dry-blended several months ago with a Vee blender for approximately 16 hr and calcined at 1300°C for 16 hr. Probably, poor mixing resulted from either the $SrCO_3$ or TiO_2 being in a caked form that was not broken up by the tumbling action of the Vee blender. The resulting powder would have a high percentage of SrO after calcining which would react with the air to form $Sr(OH)_2$ (a low-melting compound). This is the first batch of powder to react in this manner since the dry-blending program began several months ago. A repetition of this problem at FPDL is unlikely because the dry blending is done with a Waring blender which uses a chopping and cutting action of the blades to break up lumps in the powder.

Several new batches of powder have been prepared by both dry and wet blending methods with particular emphasis on breaking up the lumps in the dry blended case. The powder characteristics will be examined to provide a basis for ensuring the quality of the dry blended material.

To increase the thermal stability of the 2-3/4-in.-diam pellets, small lengths of nickel wire were mixed with the Sr_2TiO_4 powder. The pellet was pressed at 1450°C and 4000 psi. The finished pellet was within 95% of theoretical density and exhibited good thermal stability even after being heated to 600°C and immersed in a water bath.

During April, it is planned to prepress the pellet before inserting it in the nickel felt inside a second die body. The jacketing can thus be accomplished with less ram movement and possibly at a much lower temperature. Both hot and cold prepressing runs are planned.

D. Short-Lived Fission Products Pilot Production (Production and Inventory Accounts)

Isotope	Number of Batches	Amount (Ci)
Xenon-133	2	∿800
Iodine-131	1	30

E. Promethium-147 Source Fabrication, Powder Shipments, and Current Orders

One thousand curies of promethium-147 was shipped to Atomic Energy of Canada Limited in March. Donald W. Douglas Laboratories' order for 101,000 Ci of promethium-147 will be made in two shipments. Fifty thousand curies will be shipped in July and the remaining 51,000 Ci will be shipped in November 1972.

SOURCE DEVELOPMENT - 08-01-04

A. Gadolinium-153

Two batches of gadolinium (one containing 0.296 g and one containing 0.720 g of Gd_2O_3) have been separated from the HFIR control rod material. The 0.720-g sample has been prepared for neutron irradiation to produce gadolinium-153. Several requests for small sources have been received, and the gadolinium-153 produced in this irradiation will be used to satisfy these requirements.

B. Alpha Source Survey

A survey of the literature on the use of alpha emitters as alpha sources has been completed. Copies of abstracts of all relevant references found in the manual, RESPONSA, and RECON *Nuclear Science Abstracts* searches have been made and categorized according to scope, i.e., alpha sources, neutron sources employing the (α,n) reaction, and alpha-excited x-ray sources. These three categories have been further broken down into subcategories which include design, preparation methods, evaluation, and use. References recovered from a computer search of the Isotopes Information Center's files on alpha sources have also been categorized. Because of the large number of references found (several hundred) the survey will be prepared as two separate reports. The first will be on alpha sources and alpha-excited x-ray sources and the second on alpha emitters as neutron sources through the (α,n) reaction. Writing of the first report is well underway.

Electrodeposition appears to be the most common method of preparing alpha sources. One of the more interesting techniques for preparing actinide sources is the use of a small quantity of natural uranium as a carrier to increase the deposition of the actinides from solution. Evaporation and electrospraying are the next most used methods for alpha source preparation,

and a variety of other methods have been found. For the evaluation of alpha sources, the alpha-energy spectra are most frequently used for determination of source characteristics, e.g., the thickness of the radioactive material or its protective covering, or both. Measurements of secondary effects of alpha radiation such as neutrons produced by (α,n) reactions or ionization caused by the slowing down of alpha particles give an estimate of surface radiation dose rate and radiation intensity.

C. Krypton-85 Source for NaK Flow Measurements

A neutrally buoyant krypton-85 source is being designed to assist in measuring the flow of NaK having a density of 0.9055 g/cm^3. Preliminary calculations indicate that the source will need to contain between 0.025 to 0.04 mCi (depending on final dose required to obtain a satisfactory signal) and will be 0.511 in. in diameter by 0.511 in. long with a 0.010-in.-thick wall. The source will be encapsulated in stainless steel having a density of 0.29 lb/in.^{3}.

D. Radioisotope Characterization, Quality Control, and Standards

1. Radioisotope Characterization

The gamma intensity of cadmium-109 was found to be 3.8 ± 0.1% by use of a photon standard from NBS and a disintegration-rate standard from the British Radiochemical Centre; 462 days has been adopted as the half-life. New half-life values, in close agreement with ours, have been reported for phosphorus-33, copper-67, tin-113, and other nuclides.[8] In response to an inquiry about high-sensitivity activable tracers, dysprosium and rhodium were suggested because of high cross sections and short — but not too short — half-lives.

2. Radioisotope Special Analysis and Quality Control

Cobalt-57 has been widely used as a long-lived substitute standard for technetium-99m, an important radiopharmaceutical nuclide. Review of properties, availability, and NBS-traceability of various radionuclides led to recommendation that use of cobalt-57 be continued. The suggested half-life is 271 days, the average of our value with two other careful ones. We must maintain measurement capability for discontinued products because they are sometimes required as "special" items, occasionally occur as impurities in other products, and, being available as NBS standards, for example, can be used to support the validity of our calibrations for other nuclides. Requested reviews of proposed ASTM standard methods were furnished, including extensive correction of a table of properties of cesium radioisotopes. For heat-output calibrations of high-level alpha sources, the availability of an NBS calorimetry service was confirmed, and its use was recommended.

---

[8] J. Legrand, in *Metrology of Ionizing Radiations* (French), BIST No. 163, p. 61 (1971).

RADIOISOTOPE SYSTEMS DEVELOPMENT

OCEANOGRAPHIC AND NATURAL RESOURCES DEVELOPMENT - 08-03-02

A. Sand Transport Study

Radionuclides appear to be useful tools to study sand transport phenomena and, although many experiments have been conducted to demonstrate their effectiveness as tracers, little is known concerning whether or not the dynamic systems in which they are used can be tagged well enough to achieve quantitative data leading to an understanding of basic mechanisms. The Radioisotope Sand Tracing (RIST) study has progressed through equipment development to the point where important system tagging parameters can be studied.

Preparations are being made for a RIST experiment at Point Mugu, California. Operations will start on April 13, 1972, and terminate approximately one week later. The experiment will be centered around testing the simplified survey unit and performing a continuous injection experiment. Although details of the experiment are not final, the general plan is to inject approximately 20 Ci of gold-198–199 tagged sand over an 8-hr period. During the injection, a continuous survey will be made perpendicular to the shore and at the same distance from the injection point. If the count rate reaches equilibrium it should be possible to calculate a volume transport. This technique is analogous to a flow measurement technique called the "salt-dilution" method. If the tracer is injected at a continuous rate q, and at a concentration of C_1 into a stream, the flow rate is

$$Q = \frac{C_1 - C_2}{C_2 - C_0} q$$

where

C_0 = initial concentration of tracer before injection
C_2 = concentration of tracer downstream of injection point after mixing.

This relation is true if the flow is turbulent and complete mixing has occurred. These conditions should be met with the sand experiment since the injection will be within the breaker zone.

RADIOISOTOPE SALES

ITEMS OF INTEREST

An order was received from International Chemical and Nuclear Corporation for 700 mCi of phosphorus-33 to be shipped at the rate of 100 mCi every 50-60 days. During a recent visit by Bob Luten of U.S. Navy, he indicated that they might be needing two strontium-90 sources, each containing 2200 W (∿660,000 Ci). An order was received from Radiochemical Centre, England, for 30,000 Ci of tritium.

Shipments of special interest made during the month are listed below:

Customer	Isotope	Amount
Large Quantities		
Atomic Energy of Canada Limited	Promethium-147	1,000 Ci
General Nuclear Corporation	Cesium-137	500 Ci
Minnesota Mining and Manufacturing Company	Cesium-137	500 Ci
Radium-Chemie A. Zeller and Company	Tritium	10,000 Ci
New England Nuclear Corporation	Tritium	4,000 Ci
Picker X-Ray Corporation	Cesium-137	1,968 Ci
Universidade Federal de Minas Gerais, Brazil	Iodine-129	1 g
Withdrawn Items		
Mayo Clinic	Copper-67	3 lots
McClellan Air Force Base	Copper-67	1 lot
Comision National Energia Atomica, Argentina	Copper-67	1 lot
University of Rochester	Iodine-131, FP	275 mCi
University of Pittsburgh	Iodine-131, FP	50 mCi
Cleveland Metropolitan General Hospital	Iodine-131, FP	50 mCi
Isotopes Shipped for Use in Cooperative Programs		
Oak Ridge Associated Universities	Gallium-67 and Indium-111	
Vanderbilt University	Europium-156 and Xenon-133	
Argonne National Laboratory	Silver-110m	
Unusual Items Supplied		
National Bureau of Standards	Nickel-59 and Argon-39	
University of Southern California	Tellurium-123	
Cincinnati General Hospital	Iodine-129 as lead iodide	

A summary of the radioisotopes shipped in February 1972 is given in Table 4.

Table 4. Summary of Radioisotopes Shipped During February 1972

Isotopes	No. of Shipments	Amount (mCi)
Barium-140	4	28
Calcium-47	6	3.8
Cerium-144	2	1,025
Cesium-137	10	34,264,600
Europium-152–154	1	1
Hafnium-181	2	13
Iodine-129	5	1,402[a]
Iodine-131	3	250
Krypton-85, normal	11	253,600
Krypton-85, enriched	2	4,500

Table 4. continued

Isotopes	No. of Shipments	Amount (mCi)
Phosphorus-33	2	101
Ruthenium-103	2	11
Ruthenium-106	2	6
Samarium-151	2	16.7[a]
Strontium-89	5	59
Strontium-90	1	31,630,000
Technetium-99	1	2,000[a]
Tritium	15	16,910,000
Xenon-133	64	63,930
Zirconium-95	3	55
Experimental products	51	
Service irradiations		
Cyclotron	1	
Reactor	3	
Total	198	83,128,182.8 3,418.7[a]

[a]Milligrams.

The radioisotopes sales proceeds and shipments for the first eight months of FY 1971 and FY 1972 are given in Table 5.

Table 5. Radioisotope Sales and Shipments

Item	7-1-70 thru 2-28-71	7-1-71 thru 2-29-72
Inventory items	$398,337	$293,280
Major products	84,633	42,435
Radioisotope services	202,380	205,386
Cyclotron irradiations	90,158	88,711
Miscellaneous processed materials	43,223	41,340
Packing and shipping	55,923	48,285
Total	$874,654	$719,437
Number of shipments	2,103	1,648

ADMINISTRATIVE

Visitors to the IDC and travel by IDC personnel are given in Tables 6 and 7.

Table 6. IDC Visitors

Visitors (affiliation)	Subject Discussed
Marietta Georgia Sewage Plant and International Purification Systems	Effluent processing
National Science Foundation	Sediment transport in Pickwick reservoir
CERC	Sediment transport experiment
Sandia Laboratories	Plutonium sources
University of Miami and Mt. Sinai Hospital	Production of radioisotopes in cyclotron
Westinghouse Electric Company	High-level waste disposal and applications of isotopic sources for power generation
National Atomic Energy Agency Djalan Kapten Pattimura Bandring, Indonesia	Production of radioisotopes
Twenty Biophysics Students Emory University Atlanta, Georgia	Tour of Isotopes Development Center facilities

Table 7. Travel by IDC Personnel

Site Visited	Purpose of Visit
CERC	Discuss sediment transport on continental shelf
Environmental Protection Agency	Discuss radiation processing of effluents
AEC, Washington, D.C.	Discuss Environmental Impact Reports
Vanderbilt University	Conduct europium-156 experiment
AEC, Washington, D.C.	Discuss curium program

PUBLICATIONS

JOURNALS

L. C. Brown and A. L. Beets, "Cyclotron Production of Carrier-Free Indium-111," *Intern. J. Appl. Rad. Isotop.* 23, 57-63 (1972).

J. H. Hamilton, P. E. Little, A. V. Ramayya, E. Collins, N. R. Johnson, J. J. Pinajian, and A. F. Kluk, "M1 Admixtures of Transitions in ^{156}Gd," *Phys. Rev.* C5, 899-910 (1972).

REPORTS

E. Lamb and R. G. Donnelly, *ORNL Isotopic Power Fuels Quarterly Report for Period Ending December 31, 1971*, ORNL-4774, Oak Ridge National Laboratory.

E. Lamb, *ORNL Isotopic Power Fuels Monthly Status Report for February 1972*, ORNL-TM-3751, Oak Ridge National Laboratory.

A. F. Rupp, *Radioisotope Program (8000) Progress Report for February 1972*, ORNL-TM-3750, Oak Ridge National Laboratory.

PATENTS

A. F. Rupp, J. J. Pinajian, and S. J. Rimshaw, "Production of High-Purity Cesium-137," U.S. Patent 3,635,831 (Jan. 18, 1972).

INTERNAL DISTRIBUTION

1. M. A. Baker
2. P. S. Baker
3. E. E. Beauchamp
4. G. E. Boyd
5-7. T. A. Butler
8. F. N. Case
9. W. R. Casto
10. J. A. Cox
11. F. L. Culler
12. W. C. Davis
13. J. S. Drury
14. J. H. Gillette
15. H. R. Gwinn
16. R. F. Hibbs
17. K. E. Jamison
18. Lynda Kern
19. E. H. Kobisk
20. E. Lamb
21. R. E. Leuze
22. J. L. Liverman
23. L. O. Love
24. W. S. Lyon
25. R. E. McHenry
26. H. H. Nichol
27. W. W. Parkinson
28. J. J. Pinajian
29. M. E. Ramsey
30. S. A. Reynolds
31-32. R. A. Robinson
33. D. A. Ross
34. A. F. Rupp
35. R. W. Schaich
36. A. H. Snell
37. K. A. Spainhour
38. M. R. Skidmore
39-40. H. F. Stringfield
41. D. B. Trauger
42. A. M. Weinberg
43. J. C. White
44-45. Central Research Library
46. Document Reference Section
47-51. Laboratory Records Department
52. Laboratory Records - RC

EXTERNAL DISTRIBUTION

53. G. A. Andrews, ORAU, Medical Division, Oak Ridge, Tennessee
54. H. L. Atkins, Brookhaven National Laboratory, Upton, New York
55. D. S. Ballantine, AEC, Washington, D. C.
56-59. R. F. Barker, AEC, Washington, D. C.
60. N. F. Barr, AEC, Washington, D. C.
61. O. M. Bizzell, AEC, Washington, D. C.
62. G. Borscheim, ARHCO, Richland, Washington
63. C. R. Buchanan, AEC, Washington, D. C.
64. R. L. Butenhoff, AEC, Washington, D. C.
65. T. D. Chikalla, PNL, Richland, Washington
66. D. F. Cope, AEC Site Representative, ORNL
67. J. C. Dempsey, AEC, Washington, D. C.
68. W. K. Eister, AEC, Washington, D. C.
69. E. E. Fowler, AEC, Washington, D. C.
70. J. D. Goldstein, AEC, Washington, D. C.
71. A. Gottschalk, Argonne Cancer Research Hospital, Chicago, Illinois
72. F. D. Haines, AEC, Washington, D. C.
73-75. J. E. Hansen, PNL, Richland, Washington
76. W. D. Holloman, AEC, Washington, D. C.
77. J. W. Irvine, MIT (Consultant)
78. D. K. Jones, AEC, Richland, Washington
79. J. Lawrence, Lawrence Berkeley Laboratory, Berkeley, California
80. J. E. Machurek, AEC, Washington, D. C.
81. J. N. Maddox, AEC, Washington, D. C.
82. J. C. Malaro, AEC, Washington, D. C.

83. W. E. Mott, AEC, Washington, D. C.
84. G. J. Rotariu, AEC, Washington, D. C.
85. W. D. Sandberg, AEC, Aiken, South Carolina
86. R. W. Shivers, AEC, Washington, D. C.
87. F. J. Skozen (Krizek), Argonne Cancer Research Hospital, Chicago
88. L. G. Stang, Jr., BNL, New York
89-94. D. H. Turno, SRL, Aiken, South Carolina
95. A. R. Van Dyken, AEC, Washington, D. C.
96. Laboratory and University Division
97-98. Technical Information Center