CENTRAL RESEARCH LIBRARY
DOCUMENT COLLECTION

OAK RIDGE NATIONAL LABORATORY
operated by
UNION CARBIDE CORPORATION • NUCLEAR DIVISION
for the
U.S. ATOMIC ENERGY COMMISSION

LOCKHEED MARTIN ENERGY RESEARCH LIBRARIES
3 4456 0514096 9

ORNL-TM-3439

cy. 56

SEALS FOR REMOTE INSTALLATION IN A V-BAND TYPE CLAMPED FLANGE

A. A. Abbatiello, A. P. Fraas,
and R. L. Scott

OAK RIDGE NATIONAL LABORATORY
CENTRAL RESEARCH LIBRARY
DOCUMENT COLLECTION
LIBRARY LOAN COPY
DO NOT TRANSFER TO ANOTHER PERSON
If you wish someone else to see this document, send in name with document and the library will arrange a loan.

NOTICE This document contains information of a preliminary nature and was prepared primarily for internal use at the Oak Ridge National Laboratory. It is subject to revision or correction and therefore does not represent a final report.

This report was prepared as an account of work sponsored by the United States Government. Neither the United States nor the United States Atomic Energy Commission, nor any of their employees, nor any of their contractors, subcontractors, or their employees, makes any warranty, express or implied, or assumes any legal liability or responsibility for the accuracy, completeness or usefulness of any information, apparatus, product or process disclosed, or represents that its use would not infringe privately owned rights.

ORNL-TM-3439

Contract No. W-7405-eng-26

REACTOR DIVISION

SEALS FOR REMOTE INSTALLATION IN A V-BAND TYPE CLAMPED FLANGE

A. A. Abbatiello, A. P. Fraas,
and R. L. Scott

FEBRUARY 1972

OAK RIDGE NATIONAL LABORATORY
Oak Ridge, Tennessee 37830
operated by
UNION CARBIDE CORPORATION
for the
U.S. ATOMIC ENERGY COMMISSION

LOCKHEED MARTIN ENERGY RESEARCH LIBRARIES

3 4456 0514096 9

ACKNOWLEDGMENTS

The assistance of G. R. Hicks and A. E. Williams is acknowledged in the preparation of the flange layouts and drawings, H. A. Nelms who did the stress analysis for the four-bolt flange, and HFIR supervision and staff who cooperated throughout the period this work was being done.

CONTENTS

Page

ABSTRACT 1

INTRODUCTION 1

TEST PROGRAM 3

DISCUSSION OF SEALING PRINCIPLES 4

CLAMP RING DESIGN 6

Original Clamp Design 6

Revised Clamp Design 7

Forces in the Clamping Ring and Flanges 7

Forces Neglecting Friction 9

Forces Allowing for Friction 10

Pressure Test Forces 11

DISCUSSION OF TESTS AND RESULTS OF HB-1 BEAM TUBE FLANGE TESTS 12

DESCRIPTION OF PARTS USED IN TESTS 16

Test Facilities 16

Mockup 16

Stainless Steel Adapter and Pressure Vessel 16

Gaskets 16

Flange Clamps 17

Plugs 17

DISCUSSION OF TESTS AND RESULTS PERFORMED ON HFIR HB-1 BEAM TUBE FLANGE 18

Group 1 Tests 18

Group 2 Tests (Nos. 21 through 28) 26

Group 3 Tests (Nos. 29 through 40) 28

Comments on Vibration, Fretting, Etc. 28

RECOMMENDATIONS 29

REFERENCE 31

SEALS FOR REMOTE INSTALLATION IN A V-BAND TYPE CLAMPED FLANGE

A. A. Abbatiello, A. P. Fraas,
and R. L. Scott

ABSTRACT

Various seals for remote installation in the HFIR HB-1 beam hole flange were tested. The original seal (an annealed aluminum Conoseal gasket) developed a leak owing to unusual circumstances and needed replacement. The activity around the beam hole precluded any changes to the flange halves already installed on the reactor vessel or to the beam tube, thus limiting modification to the gasket materials and geometry.

Several gasket forms were tested with demineralized water at 1000 to 1500 psi (the normal operating pressure is 650 psi). Various flaws were simulated on the gasket or flange surfaces and the sealing ability of each gasket was evaluated. Applicable gasket types for this service are recommended based on the test results.

INTRODUCTION

The HB-1 beam hole (a horizontal access hole) in HFIR is sealed with a two-bolt V-band clamp to confine 650 psi reactor water pressure (see Fig. 1). In February 1970 one of the two bolts that holds the V-band together was found broken in the bottom of the pool. The failure was initially attributed to the poor location of the 7/32-in.-diam retaining pin in the threaded section of the bolt where it contributed to the high stress concentration and further reduced the area. However, it was later learned from metallographic examination that stress corrosion of the 416 stainless steel had taken place. The immediate corrective action taken was the fabrication and installation of a special yoke clamp that was fitted over the existing clamp to maintain the seal pressure. The repair was made in March 1970 and the joint appeared to be leaktight at that time. The first evidence of leakage was detected in August 1970, and by November the leak rate had increased to approximately 1 gpm and leveled

ORNL-DWG. 71-14222

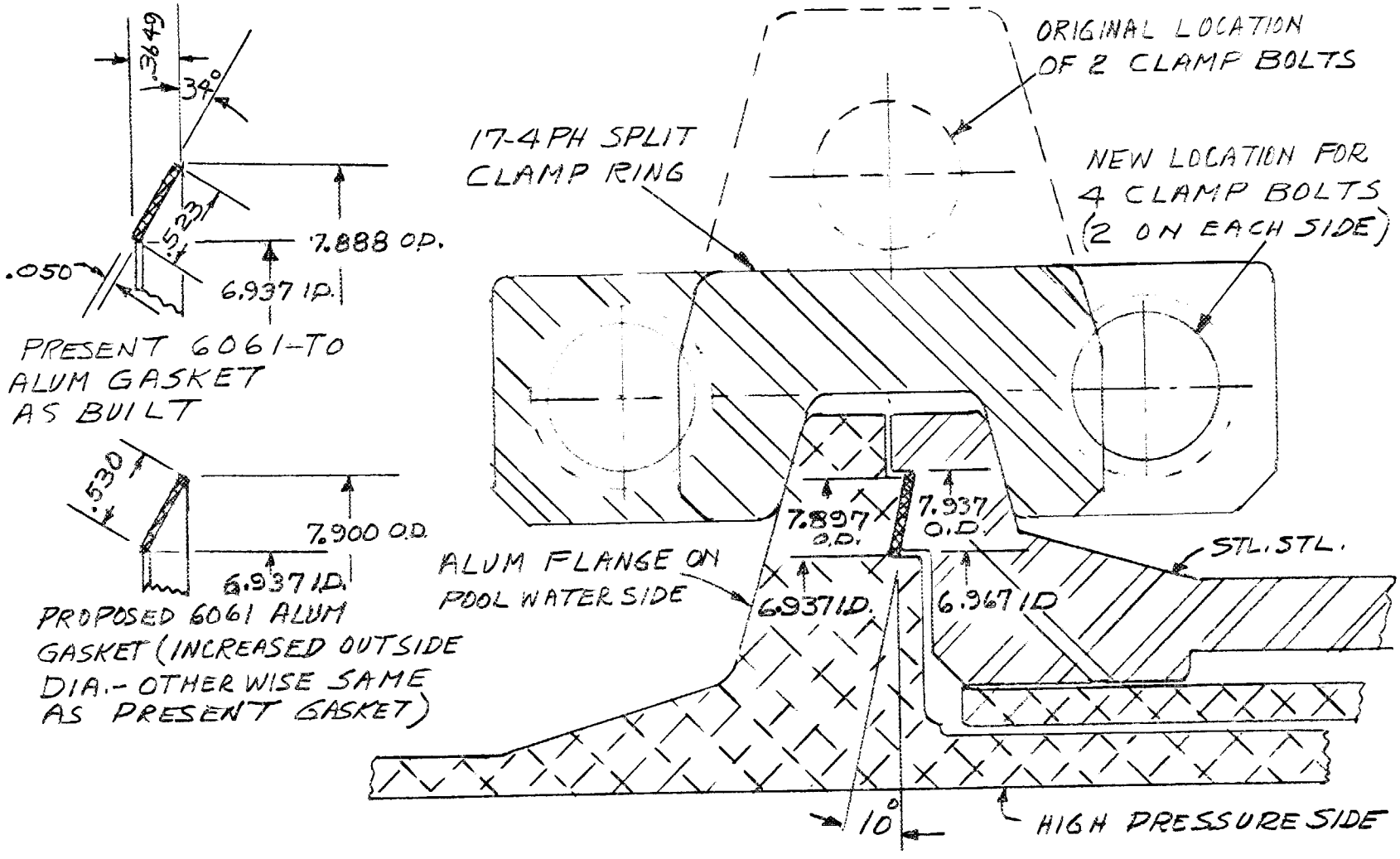

Fig. 1 Modifications to HFIR HB-1 Beam Tube Flange

off. Although the leak rate of 1 gpm (from the primary system into the pool is tolerable), it is potentially serious; thus a solution is needed.

An investigation revealed that the following problems existed with this joint:

1. Some erosion or water cutting has taken place. This will be checked when the flange is opened by making seal surface impressions.

2. Tolerance buildup and other minor errors have contributed to inadequate seal ring compression. The V-band gage dimensions were reported to be 0.015 in. undersized, causing the heels of the clamp to dig into the back of the aluminum flange, thereby reducing the clamp effectiveness.

3. High sliding friction under pool water conditions makes it difficult to get high clamping forces at the joint face.

TEST PROGRAM

A test program was initiated to obtain additional information and to provide guidance in the corrective measures to be taken, as follows:

1. The clamp ring was redesigned to use two bolts at each side instead of one, for a total of four. These were located closer to the centroid of the section (to avoid the bending moment that exists in the two-bolt design) (see Fig. 1).

2. A thin coating of water resistant silicone lubricant is to be applied to the clamp surfaces that are required to slide. (A short-term test of the lubricants and metals in contact was made that showed adequate compatibility.)

3. Increase the width of the Conoseal gasket seal ring from the present 0.523 to 0.530 in. This change increases the seal ring outside diameter only from the present 7.888 to 7.900 in. The inside diameter remains at its present 6.937 in. This gasket will still assemble in the present flange but will undergo greater strain deformation as clamping takes place, and thus will have a better chance to seal the irregular areas where water cutting may have destroyed the surface.

4. Alternate gasket forms, such as thin discs deformed by the flanges into the spaces between the present lips, were tested. Flat type composite gaskets (such as the Flexitallic) were built to fit between the flange

faces outside of the present sealing surfaces. Soft 1100 aluminum wire O-ring gaskets of 0.064-, 0.081-, and 0.093-in.-diam wire were also built to fit the present groove diameter (7.930 in. OD).

5. A test facility was constructed from available parts so that several gasket configurations could be evaluated under demineralized water conditions at operating pressure and beyond (see Fig. 2).

DISCUSSION OF SEALING PRINCIPLES

To obtain a tight seal between two mating flanges it is necessary to provide a gasket material that "gives" so it can yield and fill the irregularities between the main faces and also have some resiliency so that it will keep the voids filled. In the case of the HB-1 flange, the mating faces are stainless steel for the reactor side and 6061-T6 aluminum on the beam tube side. In the normal installation, a Conoseal gasket made of 6061-TO aluminum is deformed from a 112° included angle truncated cone to a 160° cone. The initial length of section that forms the seal is about 0.521 in. wide × 0.050 in. thick, which when compressed into the flatter cone, is reduced to a width of about 0.511 in. (see Fig. 1). Thus, the sealing takes place because of columnar compression on the 0.050-in.-thick ends of the ring outer edges. But the total deformation is only of the order of 2% $\left(\frac{0.521 - 0.511}{0.521}\right)$, which means that the surfaces must meet with good precision, otherwise inadequate deformation will take place to fill the voids and leaks will occur.

It is apparent, therefore, that we must have sufficient deformation of the soft gasket material to fill the voids, and the total load required to cause this deformation must be less than the force that can be exerted by the clamping system. Pool water conditions and a poor initial fit of the clamps in this case limited the available force for deforming the gasket material. Consequently, the compressive loads were dissipated over the rather large area of the conical surface of the Conoseal gasket (12 in.^{2}) after the initial end compression reached its limit, that is, the 2% yield. Because of the low unit loading on the large area of the Conoseal gasket, hardly any compression of the sides could be achieved by the flange faces, giving the net effect of a controlled leak or diffused

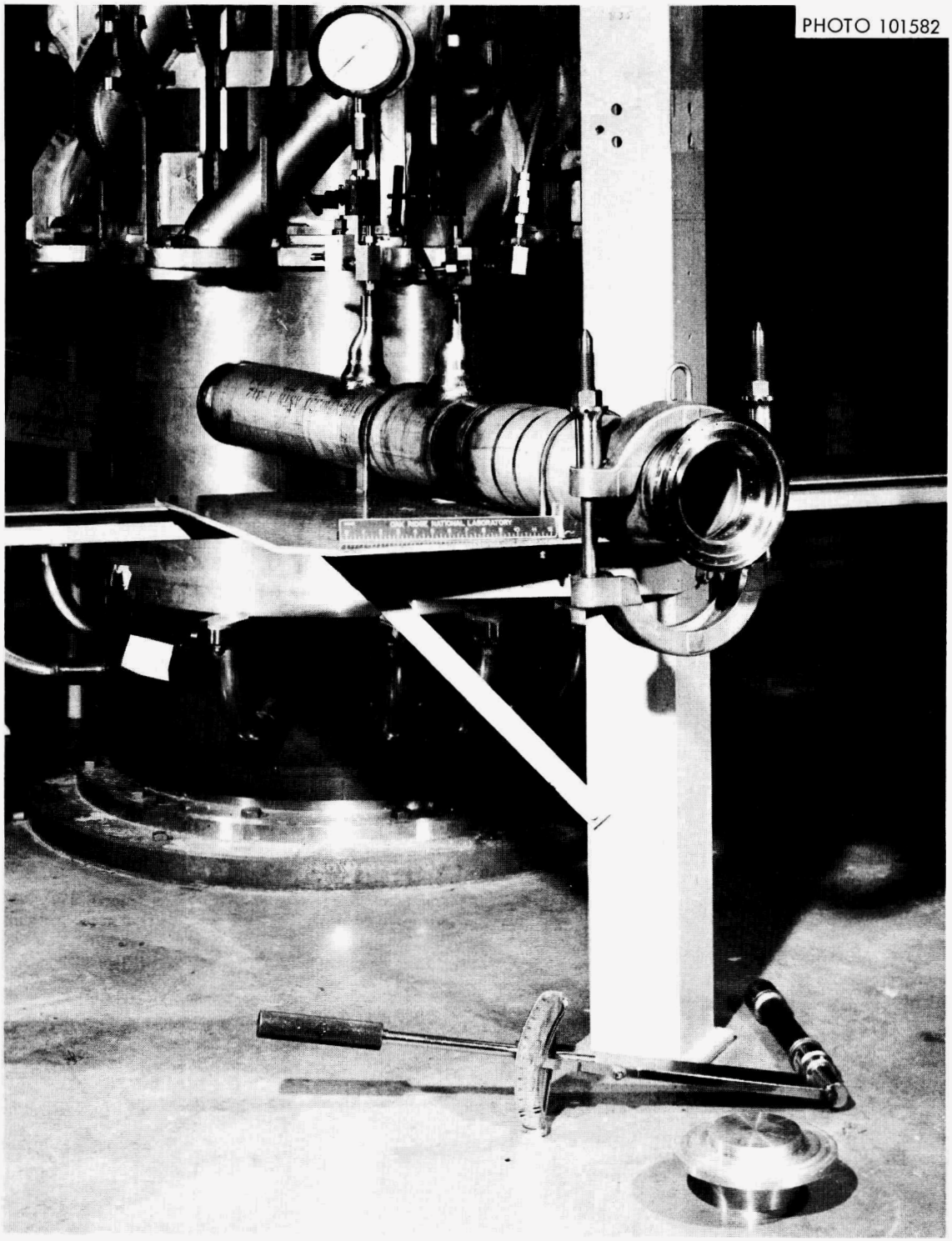

Fig. 2 HB-1 Flange Test Facility Near HFIR Mockup

orifice. In this description we are using the literal meaning of a diffused orifice as the condition when two plates are pressed together that are not smooth enough to seal and are not pressed together with sufficient force to deform them into compliance.

In the case of the aluminum O-ring gaskets, we have achieved the two desirable characteristics, that is, (1) the ring contact area to be compressed is low, about only 1.2 in.^{2}, so the clamping force can deform the O-ring well within its load capability, and (2) the change in width between the installed position (0.093 in. diam) and the compressed position (0.030 in.) is sufficiently great (over 60%) to give excellent plastic flow. This fact, combined with the medium softness of the gasket material, causes the plastic flow that becomes the effective sealant between the two faces. A further advantage of this plastic deformation is that the material is extruded around both edges of the male flange sealing lip (see Fig. 3a) thus forming two new sealing surfaces.

CLAMP RING DESIGN

A major factor influencing both the magnitude of the axial force drawing the two halves of the flange together against the gasket and the uniformity of the load around the perimeter of the flanges is the detail design of the ring employed to clamp the two flanges together.

Original Clamp Design

The design of the original clamp ring is indicated in Fig. 3a. When the bolts drawing the two halves of this clamp ring together were tightened, the clamp tended to distort from its free shape as indicated in Fig. 3b, and this tended to give high loads at the flange parting plane with little or no load at the 45° points. The situation has been aggravated because the original clamp rings as fabricated were undersized by 0.015 in. on the diameter, thus causing the heels of the clamp ring to dig into the flange near the parting plane while the rest of the flange was scarcely contacted by the clamp ring. This effect was evident both from severe scuff marks on the flanges after the clamp rings were disassembled and from tests made with bluing compound to investigate the

extent to which the clamp ring surfaces were contacting the flanges in the manner envisioned in the design. In the original assembly of the HFIR, the flanges could be made leaktight only by beating on the clamp rings with a sledge hammer while torqueing the bolts, thus forcing the clamp rings to conform to the flanges. Even if the clamp rings had not been a bit undersized, however, distortion of the clamp as a consequence of the bending moment indicated in Fig. 3c would have given a tendency for the heels of the clamp ring to dig into the flanges and thus result in non-uniform distribution of clamping force around the perimeter.

The situation is aggravated by the high coefficient of friction that prevails between aluminum and stainless steel in demineralized water.

Revised Clamp Design

The clamp ring distortion induced by tightening of the clamp bolts as indicated in Fig. 3b can be avoided if the bolt centerlines are moved radially inward so that they are in the plane of the centroid of the clamp ring as shown in Fig. 3d. To accomplish this it was necessary to make use of two bolts instead of one and place them on ears at either side of the clamp ring rather than on a single ear projecting radially outward. The original and revised arrangements are shown in Figs. 1 and 3. With the revised arrangement there should be no distortion in the clamp ring when the bolts are tightened provided, of course, that the four bolts required are tightened uniformly, i.e., each bolt is tightened only a little bit at a time and a uniform torque is maintained on each bolt in the course of the tightening operation. If this is not done, the flange may tend to twist, and this in turn will lead to flange distortion and nonuniform contact around the perimeter.

Forces in the Clamping Ring and Flanges

The forces acting to compress the gasket are a function of the geometry of the clamp ring and the flange. These forces can be estimated readily if one first assumes that no frictional forces act to reduce the effect of the force applied to the torque wrench used to tighten the bolts in the clamp.

ORNL-DWG. 71-14223

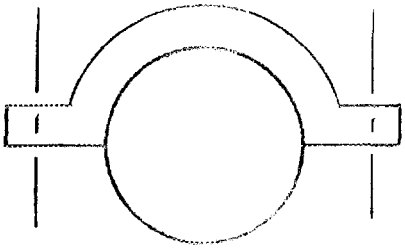

a. Outline of half of original flange clamp showing lines of action of bolt forces.

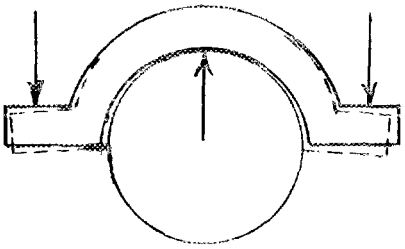

b. Exaggerated outline of flange clamp having an oversize bore. The solid outline shows the free condition and the dotted outline the deformed condition under load.

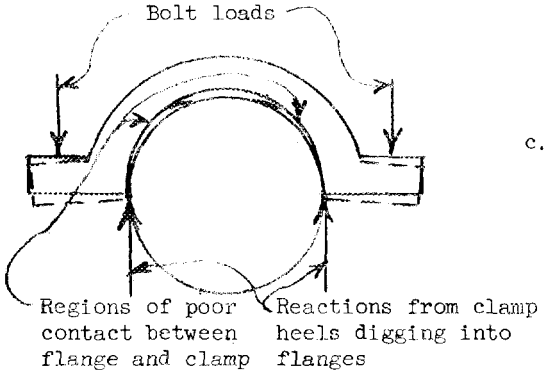

c. Exaggerated outline of flange clamp with an undersize bore. The solid outline shows the free condition and the dotted outline the deformed condition under load.

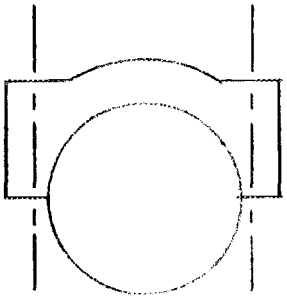

d. Outline of half of new 4-bolt flange clamp showing lines of action of bolt forces.

Fig. 3 Outlines of Original 2-Bolt and New 4-Bolt Flange Clamps Showing the Forces Involved and Their Tendencies to Distort the Clamp

Forces Neglecting Friction

If the four-bolt flange of Fig. 1 is employed and each of the four bolts is torqued to 125 ft-lb, the tensile force acting circumferentially in the clamp ring can be estimated readily if one ignores friction. Inasmuch as the bolts have eight threads per inch, the tension in each bolt with a 125 ft-lb torque is:

$$\text{Bolt tensile force, lb} = (\text{Torque})\ 2\pi 8 = 16\pi\ (\text{Torque, ft-lb})$$

$$= 16\ \pi \times 125 \quad = 6280\ \text{lb/bolt}$$

The radial force on the clamp ring acting on the wedge-shaped surface of the flange to bring the flanges together axially may be calculated by treating this force as if it were a pressure acting outward on a hoop under tension. Thus the total force acting in tension on the four-bolt clamp ring can be equated to a pseudo-pressure as follows:

$$(\text{Clamp ring tensile force, lb}) = (\text{Radial force, lb/in.})\ \frac{d}{2}$$

$$(\text{Radial force, lb/in.}) = \frac{64\pi}{d}\ (\text{Torque, lb-ft})$$

$$= \frac{64\pi \times 125}{7.686} = 3270\ \text{lb/in.}$$

The axial forces tending to push the flange faces together are produced by the radial loads on the wedge-shaped surfaces of the flange outer rims. If friction effects are neglected this axial force is given by:

$$(\text{Axial force on flanges, lb}) = (\text{radial force, lb/in.})\ \pi d$$

$$= \frac{64\pi^2 \times 125}{\tan 15^\circ}\ (\text{Torque, lb-ft})$$

From the above, for the frictionless case, the axial force on the flange can be estimated for a torque of 125 ft-lb, i.e.,:

$$\text{Axial force on the flanges} = \frac{64\pi^2 \times 125}{\tan 15^\circ} = 295{,}000\ \text{lb}$$

Forces Allowing for Friction

There are two important regions in which friction resists the movement of the surfaces involved in the clamping action. The first of these is in the threads between the clamp bolts and the clamp ring. The second area in which friction reduces the clamping forces is the wedgelike surface between the clamp ring and the flanges. The expressions involved above for the principal forces without friction can be modified to include frictional effects by taking the coefficients of friction for the bolt threads as ϕ_t and that for the wedge surface of the flange as ϕ_w to give:

$$\text{Bolt tension force} = 16\pi\ (\text{Torque, lb-ft})(1-\phi_t)$$

$$\text{Axial force on the flange } \frac{64\pi^2}{\tan 15^\circ}\ (\text{Torque, lb-ft})(1-\phi_t)(1-\phi_w)$$

The coefficient of friction between stainless steel and stainless steel and that between stainless steel and 6061-T6 aluminum were measured and reported in Ref. 1. These values were found to be about 0.50 and 0.66, respectively. These are surprisingly high numbers, but they are consistent with other measurements of static friction in demineralized water. Using these values and the expression given immediately above, the axial force acting on the flanges to bring them together with no lubricant thus becomes:

$$\text{Axial force on the flanges} = 295{,}000\ (1-0.50)(1-0.66) = 50{,}000\ \text{lb}$$

The large reduction in effective clamping force on the gasket of the flange as a consequence of the high coefficient of friction in demineralized water implies that some sort of lubricant ought to be employed. It appears that such a lubricant can be used without seriously affecting the pool water if the lubricant is applied sparingly. This should reduce the coefficient of friction to perhaps 0.1 to 0.2, and this in turn should yield 60 to 80% of the full force available for the frictionless case.

Pressure Test Forces

It should be noted that in pressure testing the flange joints a large axial force tending to separate the flanges is built up. The magnitude of this force is given by the product of the test pressure and the cross-sectional area inside the OD of the gasket, i.e.,:

$$\text{Flange separating force} = 0.786\ (\text{pressure, psi})\ d^2$$
$$= 0.786 \times 1500 \times 7.937^2$$
$$= 74{,}300\ \text{lb}$$

Note that this force is greater than the 50,000 lb calculated above for the force acting to hold the flange together if there is no lubrication. Thus the flanges would tend to separate until they had deflected sufficiently so that the frictional forces were reversed. This could lead to leakage.

DISCUSSION OF TESTS AND RESULTS OF HB-1 BEAM TUBE FLANGE TESTS

The tests previously outlined were made in three separate groups:

1. The first group of 12 tests was made at the HFIR mockup. All tests made at 1000 psi except for the first test, which was done at 1500 psi to check the mechanical integrity of the system. From these tests certain gasket types were considered satisfactory at 1000 psi.

2. A second group of tests was made in the HFIR shop in conjunction with the pressure testing at 1500 psi of a new stainless steel adapter that had been built and was to be prepared for use in the reactor. This provided an opportunity to retest some of the aluminum O-rings more extensively at 1500 psi. It was found that although the leaktightness at 1000 psi was satisfactory, it was not adequate for 1500 psi (the reactor operates at 650 psi).

3. The third set of tests was made at 1500 psi. These tests were carried out on the HFIR mockup, which had previously been used for the first group of tests. The adequacy of changes in O-ring material and size were confirmed during these tests.

The results are tabulated according to the groups noted above and are listed in Tables 1, 2, and 3 as listed above.

In general, the testing in Group 1, Table 1, showed that satisfactory seals could be made with several types of gasket at 1000 psi, but many of these were shown to be inadequate under a 1500 psi test (see tests listed under Group 2, Table 2). More tests were made at the HFIR mockup at 1500 psi to find combinations of flanges, clamps, and O-rings that would produce tight seals. These are listed in Group 3, Table 3.

An effort to find a slightly more resilient but still reasonably soft aluminum wire was successful, although we had to go to 0.093-in.-diam wire. O-rings made from this material meet the requirements and are recommended for this service.

Table 1. Summary of HB-1 Flange Test at 1000 psi

Test No.	Description	Torque Used (ft-lb)	Leak Tightness (drops/sec)	Strain Deformation (%)	Comment
1	Standard Conoseal 0.523 in., 6061-Al	125	0	2	Good seal, but small (2%) strain deformation may be insufficient to fill voids.
2	Extra wide Conoseal 0.530 in., 6061-Al	125	0	4	Adequate seal and greater strain may be enough to fill voids.
3	Aluminum ring 0.064 in. diam × 7.937 in. OD	100	0	50	Excellent gasket extrusion in face plane and around rim.
4	Flat aluminum 0.025 in. diam × 8 1/4 in. OD	100	Gross leak	20	Draw-cuptype shear failure. Not satisfactory unless further development is done.
5	Flexitallic with 0.1-in. backup ring	150	Leaks at 850 psi	20	Excessive flange deformation due to poor clamp fit.
6	Aluminum ring 0.081 in. diam × 7.937 in. OD	150	0	63	Fair concentricity, good extrusion considered quite satisfactory.
7	0.081 aluminum ring with 0.06 in. deep 90° notch	150 250	2 1	63 63	Not completely tight, but a practical demonstration of the flaw. This type ring could seal.
8	Flexitallic with 0.1-in. backup ring and fitted clamp rings	150 210	Large leak Small leak	20 20	Flanges not properly centered. Had physical interference. Discard this test.
9	Flexitallic without backup ring	60 100	0 0	30 to 40 30 to 40	Could be used for sealing on a "new" surface outside the present gasket area, but requires more care to align, which would be difficult to do remotely. Consider this as a second backup if nothing else works.
10	0.081 aluminum wire with 0.040 in. × 25° notch	60	0	63	Notch was put on back side. Sealing occurred at outer rim. See Fig. 6a.
11	Conoseal aluminum 0.530 in. wide with 0.030 in. × 25° notch	150	2	4	Leaked badly at first, gradually reducing to approximately 2 drops/sec at high torque, 150 ft-lb. Limited by its low strain deformation.
12	Notch across male blind flange	60	0	63	Aluminum ring extrudes into area outside of notch and makes adequate seal. Held 1000 psi overnight.

Table 2. Summary of HB-1 Flange Tests at 1500 psi at HFIR Shop

Test No.	Description or Purpose	Parts Used	Leaktightness	Results
21	Helium leak test of new stainless steel adapter	New four-bolt flange (70-2) standard Conoseal No. 2 plug (known to be marred but used as a test)	Helium leak at Conoseal	Leaked at Conoseal joint but when "bagged off" rest of unit was leaktight.
22 A	First hydrostatic test	Same as for 21	Held at 1000 psi, 10 drops/sec leak at 1500 psi	Unable to meet 1500 psi requirement.
22 B	Second hydrostatic test	Same as for 22 A except that a new standard Conoseal was used	Leaked at 125 ft-lb	Torqued to 150 ft-lb and held at 1500 psi for 6 min and then started leaking.
23 A	To test 0.081 in. aluminum O-ring at 1500 psi	Same as for 21 except for a new 0.081 O-ring (still using No. 2 marred plug)	At 125 ft-lb leaked at 700 psi	Removed — found burr on plug. Also, ring was 0.054 to 0.057 in. thick, indicating ring was not fully compressed. (Discard test)
23 B	Repeat 23 A with a new O-ring using more torque for full compression	Same as for 23 A except new O-ring	Leaked after 6 min at 1500 psi	Ring thickness of 0.032 to 0.045 in. indicated better compression but still not enough. Remove.
24	Recheck with two-bolt flange, another plug (No. 1, which was used for tests 1 to 12 but was notched)	EGCR two-bolt flange, new O-ring and No. 1 plug	Leaktight at 125 ft-lb	Held 1500 psi hydrostatic pressure overnight. Considered a good check out of the stainless steel adapter with No. 1 plug. First indication that No. 2 plug may be faulty.
25	To compare flange and plug fit for No. 1 plug	New four-bolt flange, No. 1 (notched plug). No O-ring or Conoseal	Not pressurized	Apiezon check showed adequate fit between the new four-bolt flange and plug, 0.035 in. squeeze space for O-ring.
26	To compare flange and plug fit for No. 2 plug	Same as 25 except No. 2 plug	Not pressurized	Good Apiezon check out but gasket space was about 0.050 in., and shows plugs Nos. 1 and 2 are not the same size.
27	To recheck four-bolt flange (70-2) with No. 1 plug	Four-bolt flange, No. 1 plug and new 0.081 in. O-ring	At 150 ft-lb torque was leaktight to 1000 psi, started to leak at 1400 psi	Retorqued to maximum (300 ft-lb) but still leaked 1 drop/sec at 1500 psi. At 1000 psi still leaked 1 drop/30 sec. This concludes shop tests. Further tests will be made at the HFIR mockup (see Table 3).

Table 3. HB-1 Flange Tests at HFIR Mockup at 1500 psi

Test No.	Description or Purpose	Parts Used	Leaktightness	Results
28	To test four-bolt flange (70-2) with plug No. 1 on mockup header	Four-bolt clamp (70-2), plug No. 1, mockup header	Held 1000 psi for 30 min but leaked at 1500 psi.	O-ring diam 0.026 in. in one direction and 0.047 in. at right angles indicating uneven squeeze.
29	A recheck of two-bolt coupling and 0.081 O-ring at 1500 psi	Two-bolt coupling, plug No. 1, new 0.081 O-ring	Leaked at 1400 psi but held for 1 hr at reduced pressure (1200 psi), which again leaked when pressure was raised to 1400 psi.	Established a practical upper limit for this combination, and also an indication of yielding due to load. More elasticity in the gasket might help.
29 A	To determine interchangeability of the two- and four-bolt couplings without replacing the gasket	Same as for 29	Leaked at 750 psi.	An indication the clamps are not precisely the same and that a new gasket must be used each time.
30	A test of the four-bolt clamp (70-2) with a new plug (No. 3) and a standard Conoseal		Held 1000 psi for 6 min, increased pressure to 1500 psi and held for 1 hr.	Indicates the new No. 3 plug fits well and the four-bolt flange can do the job.
31	To repeat the four-bolt clamp test with the No. 3 plug and using a new 0.081 O-ring		Held 1500 psi for 30 min.	A successful demonstration that a four-bolt flange with a well fitted plug will make a good seal with either a Conoseal or the 0.081 O-ring.
32	To test a marred plug (No. 1) with an oversized Conoseal		Steady leak at 900 psi.	Shows small yield (4%) of oversized Conoseal is still insufficient to fill voids.
33	To test the first 0.093-in.-diam O-ring (which is also slightly harder)	Clamp (70-2), plug No. 1 (badly marred), 0.093-diam O-ring with OD band filed to fit	Held 1500 psi for 30 min.	Satisfactory in spite of having had to hand file the OD of the ring in order to make it fit. (It had been built in the 0.083 fixture and was consequently oversize.)
34	To repeat Test 33 except using the 0.081 O-ring (similar to those used in the Group 1 tests)	Same as 33, except used an 0.081-in.-diam O-ring	Started to leak at 1400 psi.	Considered unsatisfactory at 1500 psi. Confirmed previous tests that showed the 0.081 O-ring could withstand only about 1000 psi
35	To test the spare four-bolt clamp (for interchangeability) using the 0.093 O-ring	Same as for 33, except used the other four-bolt clamp (70-1)	Held 1500 psi for 30 min.	Satisfactory. Confirms that either of the new four-bolt clamps will seal using even the most badly marred plug (No. 1).
36	To determine the possibility of using a plain butt joint O-ring without any welding	Same as 33, except used the 70-1 four-bolt clamp, plug No. 3 (almost new) and 0.093 wire cut to fit and butted only	Held 1000 psi for 5 min, then pressure was increased to 1500 psi and held for 40 min. Leak tight.	Demonstrates adequate ability to fill voids and opens possibility of placing O-rings in locations that require a split O-ring.
37	To test a harder grade of 0.062-in. aluminum wire	70-2 clamp, plug No. 3, lubricant not used	Torqued to 100 ft-lb, leaked at only 500 psi.	100 ft-lb torque brought flanges into contact. Lack of concentricity contributed to early failure. Demonstrates need for more gasket deformation.
38	To repeat 0.093-in.-diam O-ring test, cycle it 10 times and measure bolt elongation	Same as 37, except 0.093-in. O-ring and used D-44 lubricant	Torqued to 250 ft-lb and leaktight at 1500 psi.	Bolt elongation was rather low (0.003 in.) but doubtful because of measurement uncertainty.
39	To test a second 0.062-in. O-ring of the harder grade, similar to Test 37	Same as 37, used D-44 lubricant	Torqued to 200 ft-lb, started to leak at 1100 psi.	Removed O-ring indicates better concentricity and more uniform deformation but still not satisfactory for 1500 test pressure.
40	To repeat another 0.093-in. O-ring test at 250 ft-lb torque and measure bolt elongation	Same as 37, except 0.093-in. O-ring, used D-44 lubricant	Torqued to 200 ft-lb and leaked at 1400 psi, increased torque to 250 ft-lb and was tight at 1500 psi.	Demonstrates need for high loads to compress O-ring adequately to achieve leaktightness.

DESCRIPTION OF PARTS USED IN TESTS

Test Facilities

Mockup

This is a hydrostatic pressure containment set up. It is shown in Fig. 2 near the HFIR mockup in the reactor bay. It simulates the stainless steel companion flange on the reactor adapter.

Stainless Steel Adapter and Pressure Vessel

This was a pressure containment rig built to test the new stainless steel adapter to meet reactor requirements. It was available, and since it also had to be pressure tested, it provided a convenient vehicle in which to perform additional gasket tests at the same time that the stainless steel adapter was being tested. It should be noted that initially a 1000 psi test requirement was established as the criteria for all gasket tests (the reactor operates at 650 psi). After the tests listed in Table 1 had been completed, it was found that all gaskets did not meet the 1500 psi pressure test specification for reactor weldments. It was then agreed that it would be good practice to increase the test requirements for gaskets to 1500 psi. Accordingly, the tests in Table 2 and 3 were then carried out.

Gaskets

Conoseals — Aluminum-6061-TO, available in two sizes, the standard, 0.521 in. wide, and extra wide, 0.530 in. wide (shown in Fig. 1).

O-rings — Made from 1100 soft aluminum wire welded into a ring. First tests were made with 1/16-in.-diam wire, later 0.081-in.-diam wire was used, followed by wires similar but harder drawn of 1/16 in. diam and of 0.93 in. diam in an effort to increase the resiliency. The test results favor specifying 3/32-in.-diam wire, ASTM B-285, Class ER 1100, No. 5 Oxweld 1400 or equal, UCNC Stores catalog 07-564-0571, 36 in. long.

Flexitallic — These are composition gaskets intended to seal outside of the normal gasket area on the flat face of the flange.

Flat — This was an effort to use a flat sheet of 0.025-in.-thick aluminum in shear and compression. It was used only in Test 4 and was not successful.

Flange Clamps (used for clamping the two halves of the connector and compressing the gasket)

Two-bolt — Not suitable for use in the reactor (because of the material), but used for testing gaskets before the four-bolt flanges were available.

Four-bolt (70-1) — A new design of flange to place the bolts closer to the centroid, intended for reactor use.

Four-bolt (70-2) — A second or spare flange clamp intended for reactor use.

Plugs

No. 1 — A 6061 aluminum blind flange made to the contour of the beam tube flange and intended to simulate it. This one was badly scarred but still worked with the O-rings, although it did not seal with the Conoseal gaskets. It was used because the poor condition of its sealing surface at the gasket face represents one of the most severely damaged conditions likely to be encountered in the beam tube flange. Therefore, to seal this plug in test implies its ability to seal under very difficult conditions in the reactor.

No. 2 — This plug was also used for testing purposes. It was intentionally notched for one test (Test 12), was somewhat marred, and known to be overly thick (from as-compressed gasket dimensions), and thus represents a more severe than normal sealing condition.

No. 3 — This plug was new until it was used for Tests 30 and 31, was built to correct flange dimensions, and thus represents the best conditions likely to be encountered.

DISCUSSION OF TESTS AND RESULTS PERFORMED ON HFIR HB-1 BEAM TUBE FLANGE

Group I Tests

The following group of twelve tests were carried out in the facility next to the HFIR mockup. The results are summarized in Table 1 and below.

1. Standard Conoseal Gasket (0.523 in. wide) — 6061-T0-Aluminum

A standard blind flange with a 0.523-in.-wide Conoseal gasket (see Fig. 1) was installed in the test rig; the rig was filled with demineralized water, and was pressurized to 1500 psig for a few minutes to check out the system. The pressure was then reduced to about 1000 psi and held for 30 min. No leaks were detected, and the slight drop in pressure that occurred was attributed to the temperature equalization of an unavoidable volume of air trapped in the system. A torque of 125 ft-lb had been applied to the clamping bolts. The clamp was of the standard two-bolt construction rather than the redesigned four-bolt type (which was still being fabricated at the time). However, the two-bolt clamp had been modified to obtain the correct gage dimension at the clamping surface. The edges of the clamp had been lightly lubricated with D-44, a silicone base lubricant. The fit of the clamp and flanges had been checked with Dykem (a bluing solution to show contact). Before starting to assemble this flange, the clearance in the gasket region where the flange faces come together was checked and found to be about 0.030 in. when the outer diameters were in contact, thus assuring that the gasket would be well clamped. This gasket undergoes about 2% deformation in columnar compression loading.

2. Extra Wide Conoseal Gasket (0.530 in. wide) — 6061-T0-Aluminum

A similar test was carried out with the 0.530-in.-wide Conoseal gasket (see Fig. 1), which was also subjected to the full test pressure, 1000 psi. The torque required was essentially the same. Impressions on the gasket face showed a little more columnar deformation, which was in the desired direction to obtain gasket material deformation into the possibly eroded areas of the reactor flange. This gasket also may be

considered satisfactory. The gasket deformation was about 4%, and, although this is twice that of the preceding test, even more deformation was later found desirable.

3. Aluminum O-Ring 1/16-in.-Diam Wire

An 1100-TO aluminum ring prepared from a 0.064-in.-diam wire, rolled into a circle 7.930 in. OD, and welded was placed between the standard flanges and clamped with a bolt torque of about 100 ft-lb (see Figs. 4 and 5a). The pressure was raised to 1000 psi and held over the weekend. The system was considered tight after allowing for the slight pressure drop stemming from temperature equalization. Observation of the gasket when removed showed that it had deformed into an "L" shaped section and had wrapped around the flange edge in a manner that would provide excellent sealing if it had to fill eroded spots in the outer perimeter of the present gasket area (see Fig. 5a). The torque required was surprisingly low — about 60 to 100 ft-lb was used. This gasket form is considered quite attractive because of the high strain deformation, about 50%.

4. Flat Aluminum Gasket

A flat aluminum gasket of 6061-TO alloy 0.025 in. thick × 8 1/4 OD × 6.945 in. ID was placed on the flange and clamped so that when compressed the gasket would be deformed into a "Z" section. The intent was to deform the 0.025-in. gasket thickness into a radial space of about 0.020 in. thus producing a seal (see Fig. 5b). When torquing this seal an audible "snap" was heard. When pressure was applied to the system the gasket started to leak at about 850 psi. Upon diassembly the leak was found to have been caused by a shear failure through one side of the gasket for a length of about 3 in. This type of failure might be described as similar to a failure in a draw die with insufficient clearance. To make this type of gasket work it will be necessary to increase the radius and smoothness of each flange around which the gasket must deform. Since part of this work would have to be done to the reactor flange, the design is not considered practical for this case.

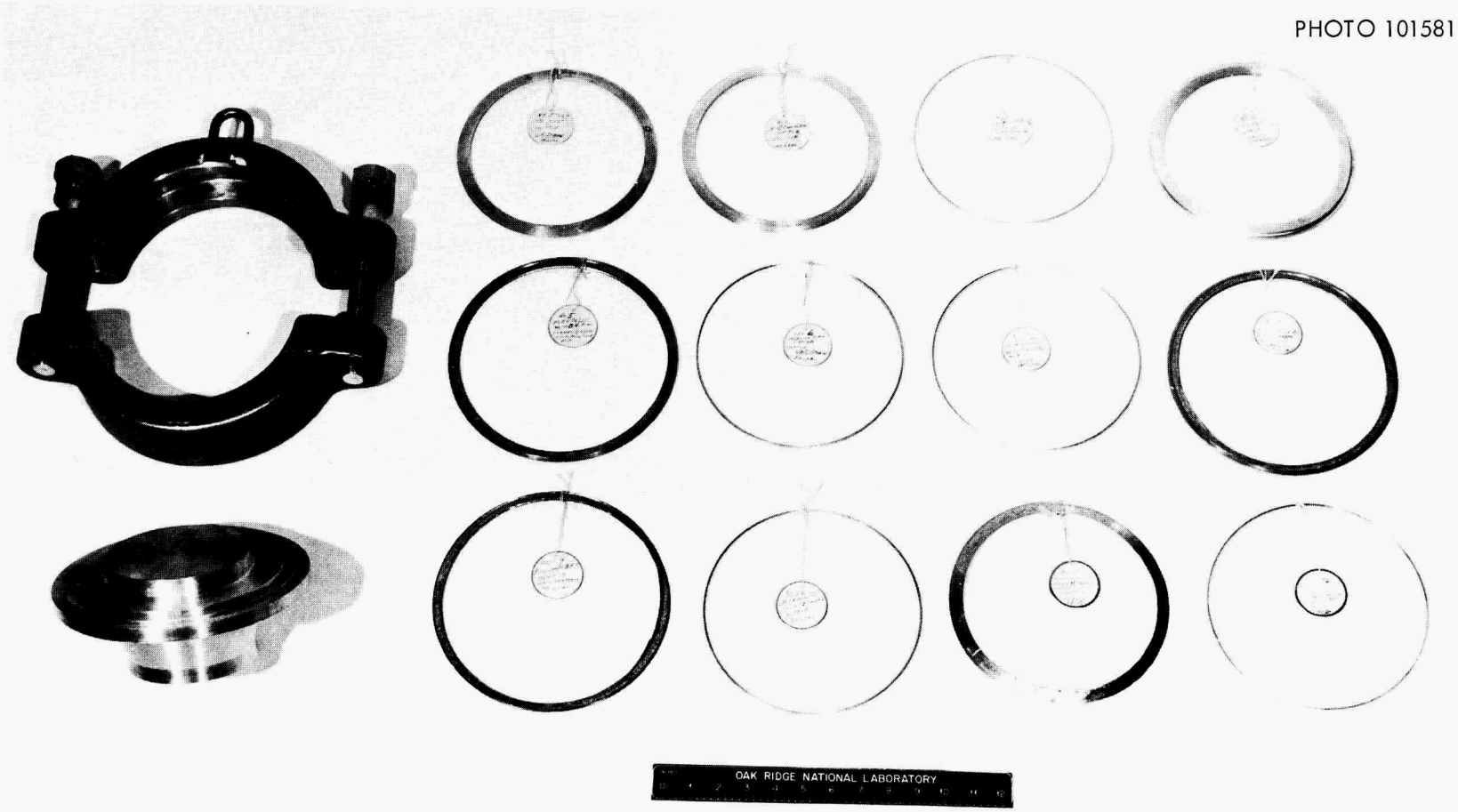

Fig. 4 Photo of Flange, Clamp Ring and Gasket Types Tested

ORNL-DWG. 71-14224

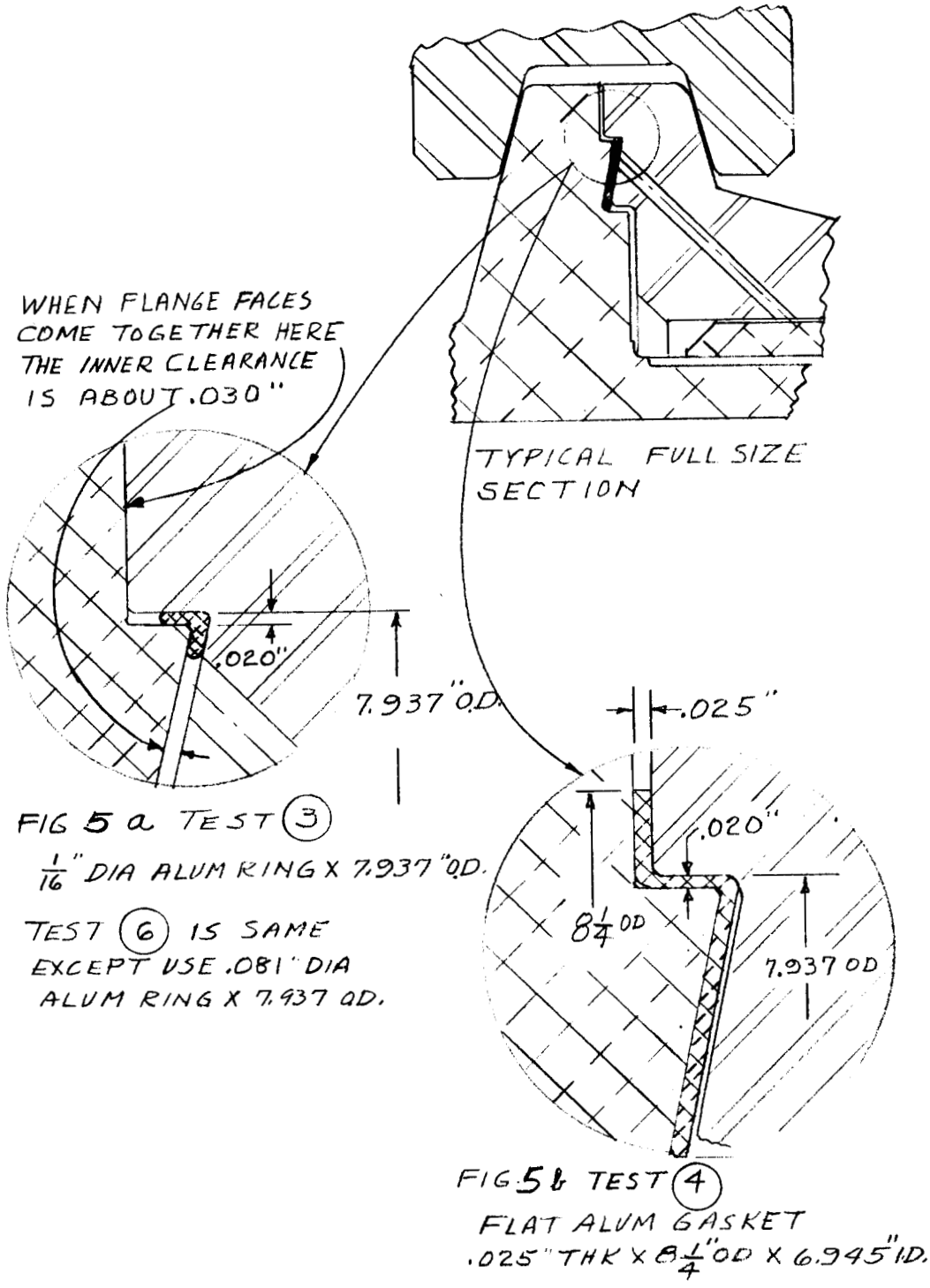

Fig. 5 Gasket Types Tested

5. Flexitallic Gasket (0.100 in. thick)

To investigate a means for sealing if the present sealing surfaces are beyond recovery, a Flexitallic gasket that had been trimmed to fit in the flat space between the flanges outside the present Conoseal area (as shown in Fig. 6a) was installed and pressurized to 1000 psi. It also started to leak at about 850 psi, but after the pressure had dropped to 800 psi it held without any further loss in pressure. This action is attributed to the thickness of the gasket (1/8 in.) that held the flanges apart to the extent that the flanges were acting like an ordinary two-bolt face flange — the excessive span caused flange deformation and leakage at high pressure, which, when released to a lower level, could then maintain the seal. If necessary, this type of gasket would work if the gage dimension between the angled faces of the clamp were increased to compensate for the thicker gasket. Although this design might provide an alternate method, it does not appear as attractive as the aluminum ring.

Based on the ease of placement and the excellent seal produced by the 0.064-in. 1100 annealed aluminum wire gasket, a further test of this type was warranted using a wire of larger diameter. A gasket was made from 0.081-in.-diam wire because it would have more cross section to provide added material for plastic flow to fill surface irregularities. The added force required to compress this gasket thickness into the available space (0.030 in.) would be higher, but the ease with which this load can be applied with well fitted and lubricated clamps makes it appear attractive.

6. Aluminum Ring (0.081 in. diam)

An 1100 alloy aluminum ring made from 0.081-in.-diam wire × 7.930 in. OD was placed between the flanges, tightened to 100 ft-lb and pressurized to about 1000 psi. It leaked about two drops per second, so it was torqued some more to 150 ft-lb at which point the leak stopped. The pressure was held adequately at about 1000 psi except for the usual drop-off due to temperature equalization. When removed, this gasket had deformed into an "L" shaped section so that it effectively made a seal both at the face side and around the outer periphery of the sealing edge (see Fig. 5a). Although the gasket had not deformed uniformly all around,

indicating that the flange had not been concentrically positioned, good extrusion along the entire circumference was apparent. This gasket undergoes approximately 60% strain deformation and can be classed with the satisfactory and workable types.

7. Aluminum Ring (0.081 in. diam with 0.060-in.-deep 90° notch)

Another test was made with one of the 0.081-in.-diam wire aluminum gaskets to determine the amount of initial damage such a gasket could accommodate, as for example, to fill gutters in the flange likely to have been produced by water erosion. A simulated defect was produced by using the corner of a piece of 7/16-in.-square hardened steel. A nick in the side of the ring was made, which was about two-thirds through its thickness — the remaining material was intentionally left thinner than the final compressed thickness of the gasket (see Fig. 6b) so that a measure of the plastic flow properties could be obtained.

The flange was torqued to 150 ft-lb and pressurized to the usual 1000 psig. A leak of about two drops per second was observed, so the flange was further torqued to the maximum with the available wrench, 250 ft-lb, and the leak dropped off to one drop per second, but it did not stop completely. Although this amount of leakage would be fairly small, it would not be acceptable for our test criteria. It is probable that we made this initial notch too severe. It is not likely that a notch of that size would be encountered in the HB-1 flange, and a slightly lesser depth would appear to have a good possibility of sealing. It should be made clear that on these aluminum rings the seal actually takes place where the gasket is extruded into the region between the sealing lips, both at the contact faces and at the circumferential annulus perpendicular to the face.

8. Flexitallic Gasket with 0.100-in.-Thick Backup Ring

In the event that none of the described gaskets are considered adequate for the HB-1 flange, a flat deformable gasket was considered that would occupy the area outside of that subjected to water erosion, thus starting with new surfaces. As mentioned in case 5, one such gasket tested was not leaktight, but this was attributed to the poor fit of the

ORNL-DWG. 71-14225

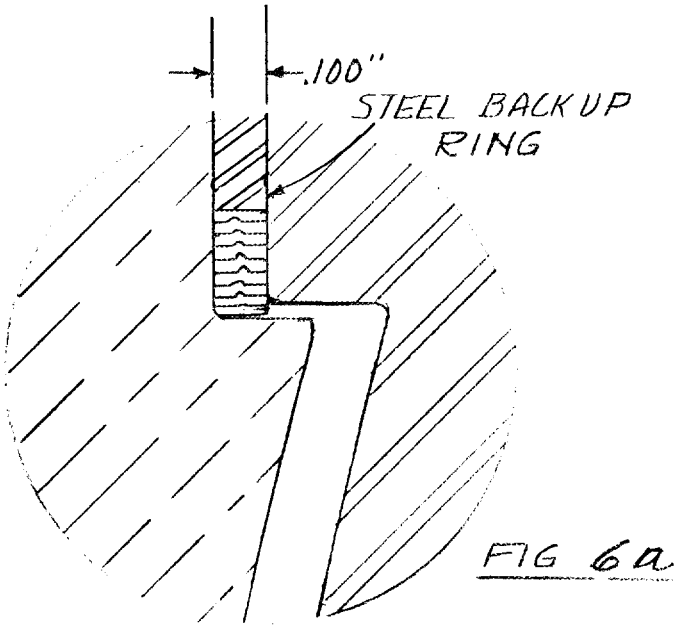

FIG 6a

TEST (5) FLEXITALLIC WITH .100" BACKUP RING.
TEST (8) SAME AS 5
TEST (9) SAME EXCEPT NO BACK UP RING

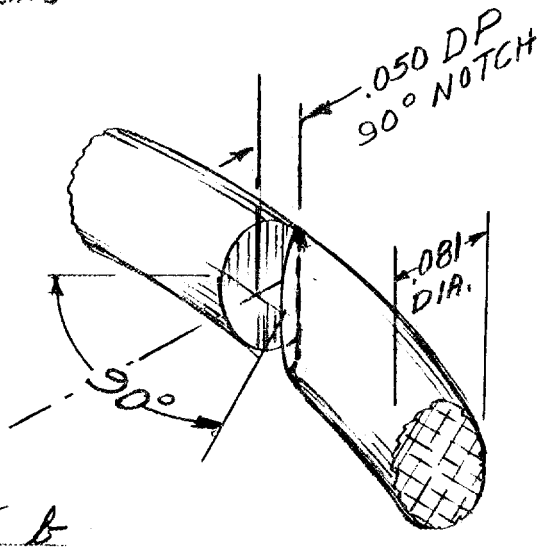

FIG 6 b

TEST (7) .081 DIA. ALUM RING X 7.937 O.D. WITH 90° NOTCH .050 DEEP TO SIMULATE A DEFECT

Fig. 6 Gasket Types and Simulated Defects Tested

clamps because of the extra thickness of the Flexitallic. Accordingly, another pair of flange clamps was machined on the inner surface to produce the correct fit-up. Using this gasket (see Fig. 6a) the system was torqued to 150 ft-lb. It leaked, so a 210 ft-lb torque was applied but the leak continued. The system was opened and the gasket removed for examination. It was found that it had not been aligned concentrically. This happened because there was insufficient depth of recess to make the flanges self-aligning. Also, since this gasket used the 0.100-in.-thick backup ring, we felt this might be limiting the deformation and thus contributing to the lack of gasket flow, therefore a gasket without a backup ring was obtained for the next test.

9. Flexitallic Gasket Without Backup Ring

This test is essentially a repeat of the previous test except that no backup ring was used (see Fig. 6a) and more care was taken to align the flanges concentrically before the clamp pressure was applied. The system was torqued to only 60 ft-lb and checked. It seemed to be tight so we set the pressure at 1000 psi and allowed it to stand overnight. The pressure had dropped somewhat but this was attributed to the usual temperature equalization. Measurements of the remaining space between the flange faces showed 0.075 to 0.080 in. thickness would be adequate for a backup ring.

10. Aluminum Ring (0.080 in. diam with simulated defect, a notch 25° × 0.040 in. deep)

This ring was installed with the notch toward the blind flange (see Fig. 7a). The bolts were torqued to 60 ft-lb and pressurized to 1000 psi. The system held pressure except for the usual temperature equalization drop. When the seal was removed it showed that, although the notch had not been completely filled, the aluminum wire had extruded out into the cylindrical space outside the ring area and thus created a seal. Accordingly, a high percentage (60%) of extrusion or deformation is a desirable condition for getting adequate sealing around irregular surfaces.

11. Conoseal Aluminum Ring, 0.530 in. Wide, With a 25° Notch × 0.030 in. Deep Cut Into the Outside Edge to Simulate a Flaw

This type of seal with the simulated defect (see Fig. 7b) leaked badly at first (estimated at 10 drops per second) but the leakage rate was reduced gradually as the torque was increased to 150 ft-lb. It continued to leak at two drops per second, until after one hr the pressure had dropped from the initial 1080 to 180 psi. It was apparent that this type of gasket is limited in its ability to fill a gross defect because of its low (4%) strain deformation.

12. Notch Across the Male Blind Flange

In order to test the ability of the 0.081-in.-diam aluminum ring to seal a defect in the flange we cut a notch 25° × 0.020 in. deep across the outer corner of the blind test flange as shown in Fig. 7c. A new 0.081-in.-diam ring was used and torqued to 60 ft-lb (the usual conservative value). The system was pressurized to 1000 psi and appeared to be leaktight so it was allowed to stand overnight and then disassembled for examination. The soft aluminum of the gasket material filled the notch and flowed around both ends to give a tight seal. In general, the aluminum ring type of gasket seems to fill all of the requirements.

Group 2 Tests (Nos. 21 through 28)

The tests performed in Group 2 and listed in Table 2 were required when the test pressure specification was raised from 1000 to 1500 psig. These tests will not be described in detail here because they are similar to those in Group 1 (except that a different facility was employed) and are adequately documented in Table 2. One comment at this point is that this group of tests pointed out the importance of slight variations in the individual components, and also the small margin of leaktightness that existed above the original 1000 psig test requirement. In most of these tests leaks began to appear at 1200 to 1400 psig.

ORNL-DWG. 71-14226

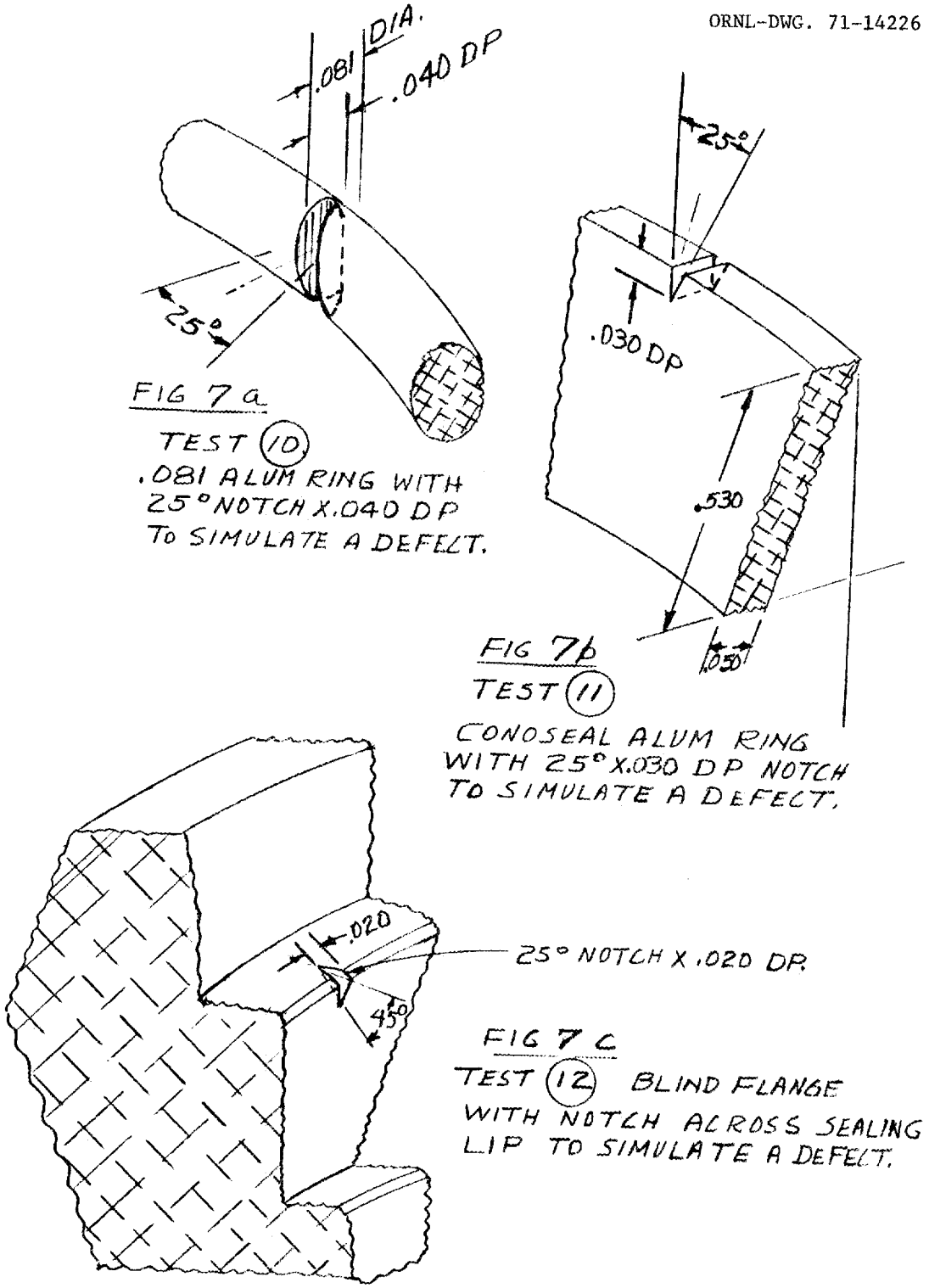

Fig. 7 Types of Defects Tested

Group 3 Tests (Nos. 29 through 40)

The third group of tests listed in Table 3, are, in part, reruns of the tests made initially at 1000 psig at the HFIR mockup, except that the higher test pressure requirement (1500 psig) was used, and further refinements were made to get acceptable results.

This set of tests demonstrated that a slight increase in the O-ring cross section (from 0.081 in. diam to 0.093 in. diam) and a slightly harder material was adequate to provide a seal that would be capable of meeting the leaktightness requirement at 1500 psig. This leaktightness was maintained in a number of cases even when the flange mating surfaces were severely scarred.

A successful test was also made for a bench test demonstration that an O-ring need not be welded at all if the joint is cut squarely and butted together. Although this may not be of immediate value it opens the possibility of installing a new O-ring without the need to remove the beam tube completely.

Comments on Vibration, Fretting, Etc.

All the tests performed would be considered short term and none were made to investigate the effects of vibration and yielding although one test, No. 37, was cycled ten times. However, we can refer to work that was done in connection with the HSST Program (Heavy Section Steel Technology) that would have a bearing on these factors. In the HSST work it was required that a machined notch in a large tensile specimen be sharpened using hydraulic pressure cycling to produce a fatigue crack. A seal at the flat surface of the tensile specimen was required to maintain pressure in the machined notch for thousands of cycles. Although the gasket eventually used for this work turned out to be an elastomer O-ring because it was more convenient to use, a soft aluminum wire type was tested. The aluminum wire gasket was made from 0.125-in.-diam soft wire, formed into a 9-in.-long ellipse with a 3/4 in. minor diameter. This was placed within the retaining plate, which had the same contour so that it would confine the gasket, but was only 0.093 in. thick. In this manner the aluminum O-ring was limited in the amount of deformation it would undergo,

about 24%. (Note that this is appreciably less than the 60% deformation used in the HB-1 O-ring.) Pressures of 16,000 to 19,000 psig were applied to the system and cycled from zero to maximum pressure at four to eight cycles per minute. After 10,000 cycles the aluminum gasket began to leak. In this application the tensile specimen deformation, which resulted from the pressure cycling, caused the gasket to "fret" or slide in a crosswise manner about 0.0001 in., and this movement was evidently the direct cause of leakage.

Using this indirect but applicable information, it is expected that the lower pressures and much less severe sliding or "fretting" action that take place in the HB-1 flange would permit the O-ring to serve a long useful life. It will be recalled that the HB-1 O-ring deforms around the male flange sealing lip (see Fig. 5a) and therefore is not exposed to excessive sliding forces. Temperature differences are also mild for the HB-1 flange.

RECOMMENDATIONS

Based on the results obtained in these tests the following flange gaskets are recommended for use in the HB-1 V-band clamp application. A consideration of the probable condition of the sealing surfaces indicates that it may be wise to provide a large degree of gasket flow deformation and also give the gasket material the opportunity to flow into seal areas where new, undisturbed surfaces are available. For these reasons, and considering the gasket placement operation for underwater conditions, the gaskets are recommended and arranged in the preferred order as follows:

1. Use the 0.093-in.-diam soft aluminum wire ring gasket because of its high strain deformation, excellent flow properties, ease of installation, and the fact that it can seal undamaged surfaces either on its outer periphery or on the inside face.

2. Use the 0.075-in.-thick Flexitallic gasket as a backup, to be used if inspection shows that the mating surfaces are beyond sealing with the standard Conoseal aluminum ring. Although this gasket should be available for use, it probably will not be required. It should not be used

unless absolutely necessary, and if used, provision is needed for adequate concentric alignment, and a set of clamp rings of the proper width must be obtained.

3. The standard Conoseal aluminum ring but built to an extra wide width of 0.530 in. should be on hand. On the assumption that this gasket could be used, it should be noted that it has a low percentage yield (4%) and it may not seal rough surfaces. Accordingly, 1 and 2 above are preferred gaskets.

Although the new four-bolt clamp provides the added feature of reducing the bending moment that exists in the two-bolt design, the two-bolt clamp will meet the service requirements when built to the correct gage dimensions. This had been done for the two-bolt clamp used in testing only (but that material being 304 stainless does not meet the reactor material requirement, which must be 17-4 PH). The four-bolt flange is preferred because of the extra bolts and the reduced tendency of clamp heels to "dig in" to the flanges.

A water resistant lubricant (Silicone D-44) should be applied lightly to the inner surfaces of the clamps and to the bolt threads before assembly.

Torqueing all the bolts to 200 ft-lb is adequate to bring the clamps together, but up to 250 ft-lb may be used without overstressing them.

REFERENCE

1. A. P. Fraas and A. A. Abbatiello, Problems with the HFIR Control Rod Drives and Their Solutions, USAEC Report ORNL-TM-2505, Oak Ridge National Laboratory, November 1969.

Internal Distribution

1-2. A. A. Abbatiello
3. R. G. Affel
4. S. E. Beall
5. F. T. Binford
6. H. Blauer
7. A. L. Boch
8. F. R. Bruce
9. C. D. Cagle
10. W. R. Casto
11. R. H. Chapman
12. B. L. Corbett
13-18. J. A. Cox
19. W. H. Culbert
20. F. L. Culler
21. J. E. Cunningham
22. G. J. Dixon
23. B. C. Duggins
24-26. A. P. Fraas
27. R. J. Griffin
28. E. D. Gupton
29. L. A. Haack
30. T. P. Hamrick
31. S. S. Hurt, III
32. E. B. Johnson
33. J. E. Jones
34. S. I. Kaplan
35. E. M. King
36. H. V. Klaus
37. J. Lewin
38. W. R. Martin
39. R. V. McCord
40. J. R. McGuffey
41. J. M. Miller
42. K. H. Poteet
43. M. E. Ramsey
44. E. F. Roy
45-46. R. L. Scott, Jr.
47. T. M. Sims
48. M. J. Skinner
49. D. A. Sundberg
50. J. H. Swanks
51. W. H. Tabor
52. D. B. Trauger
53. A. M. Weinberg
54. R. C. Weir
55. M. K. Wilkinson
56-57. Central Research Library
58. Y-12 Technical Library
Document Reference Section
59-60. Laboratory Records Department
61. Laboratory Records (RC)

External Distribution

62-64. Director, Division of Reactor Licensing
65-66. Director, Division of Reactor Standards
67-68. Division of Technical Information Extension (DTIE)
69. Laboratory and University Division, ORO
70-74. Executive Secretary, Advisory Committee on Reactor Safeguards, AEC, Wash.