LOCKHEED MARTIN ENERGY RESEARCH LIBRARIES

3 4456 0514435 9

ORNL-TM-3527

# HTGR HEAD-END PROCESSING: A PRELIMINARY EVALUATION OF PROCESSES FOR DECONTAMINATING BURNER OFF-GAS

R. W. Glass
P. A. Haas
R. S. Lowrie
M. E. Whatley

OAK RIDGE NATIONAL LABORATORY
CENTRAL RESEARCH LIBRARY
DOCUMENT COLLECTION
**LIBRARY LOAN COPY**
DO NOT TRANSFER TO ANOTHER PERSON
If you wish someone else to see this document, send in name with document and the library will arrange a loan.

OAK RIDGE NATIONAL LABORATORY
OPERATED BY UNION CARBIDE CORPORATION • FOR THE U.S. ATOMIC ENERGY COMMISSION

This report was prepared as an account of work sponsored by the United States Government. Neither the United States nor the United States Atomic Energy Commission, nor any of their employees, nor any of their contractors, subcontractors, or their employees, makes any warranty, express or implied, or assumes any legal liability or responsibility for the accuracy, completeness or usefulness of any information, apparatus, product or process disclosed, or represents that its use would not infringe privately owned rights.

ORNL-TM-3527

Contract No. W-7405-eng-26

Unit Operations Section
CHEMICAL TECHNOLOGY DIVISION

# HTGR HEAD-END PROCESSING: A PRELIMINARY EVALUATION OF PROCESSES FOR DECONTAMINATING BURNER OFF-GAS

R. W. Glass
P. A. Haas
R. S. Lowrie
M. E. Whatley

JULY 1972

OAK RIDGE NATIONAL LABORATORY
Oak Ridge, Tennessee 37830
operated by
UNION CARBIDE CORPORATION
for the
U.S. ATOMIC ENERGY COMMISSION

LOCKHEED MARTIN ENERGY RESEARCH LIBRARIES

3 4456 0514435 9

CONTENTS

Page

ABSTRACT . . . . . 1

1. INTRODUCTION . . . . . 1

2. PROCESS REQUIREMENTS . . . . . 2

3. PROCESSES FOR SEPARATING $^{85}Kr$ FROM BURNER OFF-GAS . . . . . 4

3.1 Physical Adsorption of the Noble Gases . . . . . 5

3.2 Separation by Thermal Diffusion . . . . . 6

3.3 Hot-Metal Trapping . . . . . 6

3.4 Separation Using Permselective Membranes . . . . . 6

3.5 Chemical Reaction of the Noble Gases . . . . . 7

3.6 Physical Liquid Absorption of the Noble Gases . . . . . 7

3.7 Scrubbing Processes for Absorbing $CO_2$ . . . . . 9

3.7.1 Organic Solvent Processes . . . . . 10

3.7.2 The Carbonate Processes . . . . . 10

3.7.3 Other Inorganic Solvent Processes . . . . . 11

3.8 Processes for Liquefying $CO_2$ . . . . . 11

3.9 Solidification of $CO_2$ . . . . . 12

4. EVALUATION OF THE HOT POTASSIUM CARBONATE (HPC) PROCESS FOR REMOVING CARBON DIOXIDE . . . . . 12

4.1 Stoichiometry of the $CO_2$ Absorption Process . . . . . 13

4.2 Application of the HPC Process to the TURF Off-Gas . . . 15

4.3 Estimates of the Size of Absorber to Be Used in the TURF Demonstration . . . . . 16

4.3.1 Feed Gas . . . . . 16

4.3.2 Liquid Streams . . . . . 17

4.3.3 Estimates of the Sizes of the Packed Sections . . 17

5. SIMPLE DISTILLATION OF LIQUID CARBON DIOXIDE (DLC) . . . . . 18

5.1 Distillation to Separate Purified $CO_2$ . . . . . 22

5.2 Distillation to Separate $CO_2$-Xe-Kr from $O_2$-CO-$N_2$ . . . . 23

6. KRYPTON ABSORPTION IN LIQUID CARBON DIOXIDE (KALC) . . . . . 24

7. EVALUATION OF THE CONTROLLED SOLIDIFICATION OF $CO_2$ . . . . . 26

CONTENTS (continued)

Page

8. CONCLUSIONS AND RECOMMENDATIONS . . . . . 27

9. APPENDIXES . . . . . 31

9.1 Appendix A: Estimation of HPC Process Absorber Sizes for TURF Head-End Off-Gas . . . . . 32

9.2 Appendix B: Estimation of Equipment Sizes for Simple Distillation to Decontaminate $CO_2$ . . . . . 38

9.3 Appendix C: Estimation of Flow Rates and Equipment Sizes for Krypton Absorption in Liquid $CO_2$ (KALC) . . . . . 43

10. REFERENCES . . . . . 50

# HTGR HEAD-END PROCESSING: A PRELIMINARY EVALUATION OF PROCESSES FOR DECONTAMINATING BURNER OFF-GAS

R. W. Glass
P. A. Haas
R. S. Lowrie
M. E. Whatley

ABSTRACT

The off-gas from burning irradiated High-Temperature Gas-Cooled Reactor (HTGR) graphite fuel blocks must be decontaminated before $CO_2$ and the other components are discharged to the environment. The study aimed at solving this problem is part of the National HTGR Fuel Recycle Development Program. A literature search and preliminary evaluation of processes have been made for the separation and concentration of $^{85}Kr$ from gas composed mainly of $CO_2$ (>90%) but also containing small fractions of $O_2$, $N_2$, and perhaps CO. In order of preference, the most promising of the processes reviewed were found to be:

(1) Krypton Absorption in Liquid $CO_2$ (KALC)

(2) Controlled Solidification of $CO_2$ (CSC)

(3) Hot Potassium Carbonate Absorption of $CO_2$ (HPC)

(4) Simple Distillation of Liquid $CO_2$ (DLC)

The KALC process is the only one of the four that accomplishes the separation of Kr from both the less-volatile $CO_2$ and the more-volatile gases ($O_2$, $N_2$, CO). The primary uncertainity in each of the four processes is the distribution coefficient for Kr between the gaseous phase and the condensed phase. The experimental studies required for further evaluation and development are outlined.

## 1. INTRODUCTION

The off-gas from burning irradiated HTGR graphite fuel blocks will contain radioactive gases which must be removed before the $CO_2$ and other components are discharged to the environment. The development of effective and economical solutions to this problem is part of the National

High-Temperature Gas-Cooled Reactor (HTGR) Fuel Recycle Development Program.[1] This program includes a fuel reprocessing pilot plant which would operate with irradiated Fort St. Vrain Reactor (FSVR) fuel elements during 1977-78-79. The HTGR reprocessing pilot plant proposed for the Thorium Uranium Recycle Facility (TURF) in Building 7930 at the Oak Ridge National Laboratory would be scaled for ten FSVR fuel elements per day. The burner off-gas is a major and unique waste stream, and the pilot plant must include the off-gas treatment proposed for a full-scale plant. A literature search has been made to collect information on those processes which might be used to effect decontamination of the off-gas. The information that was collected has been summarized in this report in order to point out the possibilities most deserving experimental investigation.

In essence, the decontamination problem to be considered reduces to separating ppm quantities of $^{85}Kr$ from gas that is predominantly $CO_2$ but also contains smaller amounts of $O_2$, $N_2$, and perhaps CO. The other fission product gases present in the off-gas should present no special separation problems. It is possible that the concentrations of CO, $O_2$, or $H_2$ could be greatly reduced by conversion of these gases to $CO_2$ and water.

Nine processes were considered for the Kr -- $CO_2$ separation. A brief description of each of these processes is given, along with the most useful references and the principal reasons, if any, to justify elimination of the process from a detailed consideration. Four processes, which are the most promising of the nine, are evaluated in separate sections. Finally, an experimental program is recommended for future work.

## 2. PROCESS REQUIREMENTS

As presently envisioned, the head-end reprocessing of spent HTGR fuel blocks will produce an off-gas that is rich in $CO_2$ and contains trace amounts of radioactive contaminants. Off-gas constituents of special concern were estimated for the TURF demonstration and are presented in Table 1.

Table 1. Estimated Composition[a] of the Head-End Off-Gas for the TURF Demonstration

| Major Components | Partial (25%)-Block Burning | | | Whole-Block Burning | | |
|---|---|---|---|---|---|---|
| | lb/hr | scfm | vol % | lb/hr | scfm | vol % |
| Carbon dioxide | 212.5 | 28.9 | 89.7 | 494.2 | 67.2 | 89.7 |
| Oxygen | 13.0 | 2.4 | 7.5 | 30.4 | 5.7 | 7.5 |
| Nitrogen | 4.2 | 0.9 | 2.8 | 9.8 | 2.1 | 2.8 |
| Total | 229.7 | 32.2 | 100 | 534.4 | 75.0 | 100 |

| Contaminants | Two-Year Exposure | | | Six-Year Exposure | | |
|---|---|---|---|---|---|---|
| | ppm[b] (total) | ppm[b] (radioactive) | Ci/day | ppm[b] (total) | ppm[b] (radioactive) | Ci/day |
| Xenon | 9.7 | — | — | 61 | — | — |
| Krypton | 2.5 | $2.3 \times 10^{-1}$ | 1024 | 16 | 1.2 | 5548 |
| Tritium | $4.0 \times 10^{-3}$ | $4.0 \times 10^{-3}$ | 16 | $2.4 \times 10^{-2}$ | $2.4 \times 10^{-2}$ | 95 |
| Iodine | $5.0 \times 10^{-1}$ | $4.5 \times 10^{-7}$ | 2 | 3 | $9.2 \times 10^{-7}$ | 2 |
| Bromine | $8.4 \times 10^{-3}$ | — | — | 0.5 | — | — |

[a]Estimates are based on the currently proposed processing rate of 9.7 Ft. St. Vrain fuel blocks (150-day-cooled material) per 24-hr day.

[b]Based on 75-scfm total gas rate.

The ORIGEN Code[2] was used to calculate the data given in Table 1. Variability of the numbers in this table reflects the differences that are possible in the fuel exposure and reprocessing steps. As planned, 9.7 Ft. St. Vrain fuel blocks will be processed per day. Exposure times in the reactor for these blocks will vary from one to six years, and the cooling period will be 150 days or more. Although the reference flowsheet is for partial-block burning, both burning methods are being considered. Whole-block burning will more than double the amount of off-gas to be treated as compared with partial-(25%)-block burning. Complete separation of fuel sticks from the block graphite does not eliminate the problem since about a quarter of the carbon is present in the fuel sticks.

While it is not possible to state the exact composition of the off-gas from the demonstration at TURF, the estimates in Table 1 may be viewed as an indication of the magnitude of the decontamination problem to be solved. It is conceivable that the relative amount of nitrogen could be reduced considerably by several fairly simple expedients, although air in-leakage would probably prevent its complete removal. It would appear that, as long as the burning of graphite plays an important role in HTGR fuel reprocessing, the off-gas decontamination process will center around the separation of $^{85}Kr$. The decontamination factor required is $10^3$; that is, at least 99.9% of the krypton must be collected in a concentrated form for storage. This is the objective of the separation processes to be evaluated. The tritium and $^{131}I$ can be handled without developing any new processes and thus will not be considered further. A major objective in the processing of the head-end off-gas, apart from its decontamination, is that the volume of waste generated by the processing be kept small.

## 3. PROCESSES FOR SEPARATING $^{85}Kr$ FROM BURNER OFF-GAS

A number of separation methods have been evaluated from the standpoint of their applicability to the fundamental problem of retrieving $^{85}Kr$ from burner gas, which mainly consists of carbon dioxide (>90%). These methods are discussed in the subsections that follow.

### 3.1 Physical Adsorption of the Noble Gases

Of the many possible adsorbents, activated charcoal and molecular sieves have received the most attention for trapping or holdup of the noble gases in both off-gas and coolant gas streams. Browning et al.[3] have shown that Columbia-G charcoal is slightly superior as a noble-gas adsorbent when compared with other adsorbents such as silica gel, activated alumina, Driocel, porous glass, carbon wool, and molecular sieves 5A, 13X, 10X, and 4A, as well as other charcoals. Because retention times for the noble gases decrease logarithmically with increasing temperature, the use of refrigerated beds has received considerable attention. However, the necessity to make provisions for containment of the gases in the event that refrigeration is lost complicates this low-temperature operation. Also, oxygen or other oxidizing agents tend to concentrate on cold charcoal; and, under certain conditions, the charcoal and the combustible part of the carrier gas can undergo chemical reaction. Likewise, molecular sieves are subject to explosion as the result of local heating of absorbed gases by radioactive particles. Although fire and explosion hazards may be minimized by proper design and operation,[4] and while refrigeration permits the use of smaller beds, the hazards remain. Additionally, materials that might freeze ($H_2O$, $CO_2$) must be removed from the gas before it enters the refrigerated beds.

The effect of either $H_2O$ or $CO_2$ on the adsorption of $^{85}Kr$ has been shown to decrease the retention time of the Kr at ambient temperature. Thus, if $CO_2$ is present, extremely large beds may be required. Based on the findings of Browning,[3] the amount of charcoal per bed for two similar beds operating at 25°C on 8-hr cycles would exceed 30 tons for the retention of $^{85}Kr$ from the head-end off-gas flowing at the rate of 30 scfm.

Data are available[5,6] to show both the deleterious effect of $CO_2$ on the retention of krypton on charcoal and the similarity of krypton and $CO_2$ adsorption on molecular sieves (both having critical diameters near 4 Å). Therefore, little hope remains for the expedient use of physical adsorbers in dealing with the gross quantities of head-end off-gas from TURF and subsequent HTGR reprocessing plants.

### 3.2 Separation by Thermal Diffusion

Although thermal diffusion is a well-established process, its quantitative evaluation has not been attempted here. Certain disadvantages are clearly recognized, however, and these alone make the use of thermal diffusion impractical in the application discussed in this report. These disadvantages are: (1) large quantities of off-gas must be processed; (2) the thermal process is inherently slow; (3) large amounts of coolant would be required.

Attempts to use thermal diffusion as a means of practical separation have been reported,[7,8] but the process invariably proves to be more expensive than alternative techniques.

### 3.3 Hot-Metal Trapping

The technique of removing contaminants from a gas stream by the use of hot-metal reactions is sometimes applicable. The method most generally used[9] employs finely divided metal and requires only the controlled heating of a tube packed with metal fines. Both static (batch) and dynamic (continuous or semi-batch) processes are used.

The hot-metal trapping method is based on the concept that the noble gases will not react with hot metal at conditions under which other gases (e.g., $O_2$ and $N_2$) will. In practice, the method is more generally useful in the purification of the noble gases than in their recovery. With regard to the off-gas from the demonstration at TURF, the hot-metal trapping procedure would presumably be of utility only in removing $N_2$ and $O_2$, and is completely impractical for removing the bulk of the $CO_2$.

As a rule, the hot-metal technique requires high temperatures (200 to 1000°C) and careful control. Regeneration can be difficult, if not impossible, and variations in metal preparations can produce widely varying effects in the degree of purification.

### 3.4 Separation Using Permselective Membranes

With porous membranes, the separation factor for gases is proportional to the ratio of the square roots of the molecular weights.

However, with permselective membranes (e.g., silicone rubber) the separation factor is proportional to the ratio of the products of the solubilities in, and the diffusivities through, the membrane. Increased concentrations of $CO_2$ (i.e., 15%) have been shown[10] to increase the effective permeability of Kr. However, since $CO_2$ is more permeable than either $N_2$ or Kr, the $CO_2$ is concentrated with the Kr, with the separation factor decreasing regularly as the $CO_2$ concentration in the entering gas mixture increases. It is obvious, then, that permselective membrane processes have no utility from the standpoint of primary gas decontamination; nevertheless, they might prove useful in subsequent concentration of the noble gases.[11]

### 3.5 Chemical Reaction of the Noble Gases

Precipitation of the noble gases as clathrates or fluorides has been proposed. Such a process would yield a solid product, thereby simplifying permanent storage.[12,13] The process by which the noble gases react would be severely hindered in the case of the TURF-type off-gas due to the very low concentration of these gases in the off-gas stream.[14] Because critical operating conditions would have to be maintained for long periods of time in order to obtain significant reaction yields, the straightforward use of noble gas reactions does not appear practical. However, this type of process might be useful in processing concentrated batch fractions of the radioactive noble gases for ultimate storage.

### 3.6 Physical Liquid Absorption of the Noble Gases

Considerable interest in physical liquid absorption processes for recovering noble gases has evolved in the past 10 to 12 years. McIlroy *et al.*[15] have piloted studies using $CCl_4$ as the solvent, while Steinberg *et al.*[16-18] have examined the use of AMSCO 123-15 (American Mineral Spirits Solvent 140), Ultrasene (Atlantic Refining Co. solvent), liquid nitrous oxide, and Freon-12. More recently, efforts to further develop the $CCl_4$ process have been made by Taylor and Wall.[19] Stephenson *et al*,[20] who studied the use of Freon-12 and Freon-11 in pilot-plant-scale equipment sized to process 15 scfm of air, concluded that a continuous

selective absorption process using Freon-12 can be used confidently to remove essentially all traces of krypton and xenon from contaminated air sources.[20] Actual operational problems encountered in the course of the formal pilot-plant testing program were minor and were mainly associated with the experimental nature of the setup. The design, construction, and operation of the plant were relatively straightforward. Consequently, the process should readily lend itself to nuclear applications, where a high degree of reliability is essential.

Table 2 lists the gases of concern in order of increasing solubility in $CCl_4$ (this also corresponds approximately to the order of solubility in other solvents), of decreasing volatility, and of increasing adsorptivity on charcoal. Thus, regardless of whether fractional absorption into solvents, distillation of the liquefied gases, or adsorption is used, similar results should be achieved.

Table 2. Relative Solubilities of Off-Gas Components in Carbon Tetrachloride[a]

| Component | Equilibrium Constant at STP, $\frac{\text{mole fraction in vapor}}{\text{mole fraction in liquid}}$ |
|---|---|
| Hydrogen | 3100 |
| Nitrogen | 1600 |
| Oxygen | 830 |
| Krypton | 190 |
| Carbon dioxide | 99 |
| Xenon | 71[b] |

[a]See ref. 19.

[b]Estimated.

An important point generally implied (and often stated) concerning the processing of gas streams for the recovery of the noble gases is that $CO_2$ is removed in pretreatment. Table 2 gives an indication of why such pretreatment is needed. As a further indication of the difficulty in separating the noble gases from $CO_2$ by physical absorption, the methods for predicting selective solvents[21] suggest that good solvents tend to possess cohesive energy densities (CED) nearly equal to the solute in question. The solubility parameter $(CED)^{1/2}$, usually expressed as $(cal/cc)^{1/2}$, reflects the amount of energy necessary to vaporize (or condense) a given volume of substance. In the case of $N_2$, $O_2$, $CO_2$, and Kr, the relative CEDs at 25°C are 1.0, 1.25, 1.52, and 1.57 respectively; it would be expected, therefore, that a physical solvent for removing Kr from $N_2$-$O_2$ would tend to remove $CO_2$ nearly equally well.

### 3.7 Scrubbing Processes for Absorbing $CO_2$

A large number of scrubbing processes have been developed for absorbing $CO_2$ from various synthesis gases. Essentially, all of these may be grouped into a small number of similar processes. The types of solvent used include organic and inorganic, both with and without catalysts. The operation usually employs either a pressure cycle or a temperature cycle for the absorption and desorption steps.

While the processes have been developed and presented in the light of industrial-scale $CO_2$ removal from various gas streams, the obvious indications are that they may also be used to treat an HTGR head-end off-gas for $CO_2$ removal. However, the selection of such an industrial process for off-gas treatment, based on industrial standards of comparison alone, is difficult. The off-gas, the reason for its treatment, the specialities of its treatment, etc., combine to present a problem somewhat different from processing gases involved in industrial synthesis.

Since a complete review of all $CO_2$ removal methods is beyond the intent of the present report, reference is made to the comprehensive treatment of such processes by Kohl and Riesenfeld.[22] Also, Noyes[23] has summarized many of the processes.

### 3.7.1 Organic Solvent Processes

The more prominent organic solvent processes include the Rectisol process (methanol), the MEA process (monoethanolamine), the acetone process, the sulfinol process (sulfolane mixed with an alkanolamine), the polyglycol ether process, the Fluor solvent process (propylene carbonate, glycerol triacetate, butoxydiethylene glycol acetate, and methoxytriethylene glycol), and the Hydrocarbon process (Stoddard solvent).

Several approaches are possible with each of the mentioned processes; however, certain general characteristics of these processes, for example, solvent loss and degradation, explosive vapors, and solvent cost, might cause difficulties in off-gas processing.

For highly concentrated $CO_2$ gas streams, the hot potassium carbonate process (HPC) appears to be superior to organic processes, although particular circumstances in a given case could cause the validity of this observation to be questioned.

### 3.7.2 The Carbonate Processes

A number of variations of the HPC process have appeared in the literature. The basic process is a pressure cycle absorption-desorption procedure in which absorption pressures of 20 atm and desorption pressures near 1 atm are typically used. The carbonate stream is converted to bicarbonate at high pressure in the absorber by contact with $CO_2$. The bicarbonate stream is depressurized in the desorber and thereby releases the absorbed $CO_2$. Throughout the process, the aqueous stream is recycled at a temperature very near boiling and, therefore, requires little in the way of heat exchange equipment and also allows for rather high concentrations of carbonate and bicarbonate to be used without precipitation problems. Basic work on the HPC process has been published by Benson *et al.*[24-26] A more-detailed evaluation is presented in Sect. 4 of this report.

Significant variations in the carbonate process include the use of various catalysts to improve the rates of absorption and desorption and the use of air-stripping to facilitate regeneration of the carbonate solution; trade processes include the following: the Giammarco-Vetrocoke;

the Catacarb ; the Lurgi; and the Benson, Field and Epes processes. In each of these, an unspecified catalyst is employed. The catalyst is usually reported as being nontoxic, noncorrosive, inexpensive, and of low volatility.

### 3.7.3 Other Inorganic Solvent Processes

In the past, water and aqueous ammonia have probably received more attention than all other inorganic solvents for $CO_2$. The principal disadvantages of the use of aqueous ammonia are its corrosive nature as a carbonate and the requirement of a flow scheme that is somewhat complex as compared with either the MEA or the HPC processes. The single (and overwhelming) disadvantage of using water as an absorbent is the requirement for voluminous quantities relatively free of $CO_2$; this, in turn, makes it necessary to employ large gas-liquid contactors, pumps, and other process equipment.

In the light of current practice, the use of either aqueous ammonia or water as a scrubbing medium appears to be less favorable than the use of hot carbonate solution.

## 3.8 Processes for Liquefying $CO_2$

Carbon dioxide can be liquefied relatively easily as compared with other burner off-gas constituents; consequently, continuous liquefaction and rectification should provide a workable method for separating bulk $CO_2$ from the gas mixture. Traces of $CO_2$ remaining at the end of such a process could be removed in cold traps, and the remainder of the off-gas could be processed by cryogenic distillation[27,28] or by a physical absorption method (see Sect. 3.6).

Although any desired degree of decontamination could theoretically be achieved by liquefaction processes, compression and cooling requirements may present practical limitations. Provision for the containment of fission product gases in the event that refrigeration is lost complicates this low-temperature operation. Materials that might freeze must be removed prior to introduction of gas into the system. Additionally,

the possible formation of ozone by radiolysis of oxygen could present an explosion hazard, and care in design and operation of the liquefaction-distillation process will be required. Two attractive variations of the use of liquefaction of $CO_2$ will be discussed later.

### 3.9 Solidification of $CO_2$

The process by which dry ice is manufactured from gaseous $CO_2$ is well developed.[29,30] The fact that Kr and other off-gas components should remain gaseous under conditions at which solid $CO_2$ is formed (see Table 3 in Sect. 5) could serve as a basis for the separation of these gases from carbon dioxide.[31]

Adsorption and trapping of krypton in the interstitial spaces among the dry ice crystals would be a determining factor in the successful use of the solidification processes. The growth of large crystals by surface freezing might minimize the loss of Kr from the gas phase if such a loss should be found to be significant.

Application of the principle of $CO_2$ solidification will be discussed in more detail in Sect. 7.

## 4. EVALUATION OF THE HOT POTASSIUM CARBONATE (HPC) PROCESS FOR REMOVING CARBON DIOXIDE

The first of the four processes considered worthy of more-detailed study is the HPC process. Originally, this process was developed[24-26] for removing $CO_2$ from pressurized synthesis gases. Thus, available information relates specifically to gas mixtures whose $CO_2$ contents are much lower than that of the head-end gas from the demonstration at TURF.

The particular advantages of the HPC process as compared with other regenerable processes such as the amine processes may be summarized as follows. The solubility of $CO_2$ is more dependent on pressure in the potassium carbonate system than in the amine systems and remains appreciably high at elevated temperatures. Thus, the process cycles between the high-pressure absorption and low-pressure desorption, with the

aqueous stream at a temperature near boiling at all times. Heat exchange equipment used in the amine systems to preheat the bicarbonate-rich solution for regeneration and to cool the carbonate-rich solution for absorption is not required in the HPC process. As the carbonate and bicarbonate solubilities increase with temperature, the higher-temperature operation allows for higher carbonate concentrations and conversions. Corrosion problems and volatility losses are minimal in the HPC process, whereas they are often appreciable in other absorption systems.[32]

The basic HPC flow scheme is illustrated in Fig. 1; however, a variety of modified HPC processes have been reported in the literature.[33-37]

### 4.1 Stoichiometry of the $CO_2$ Absorption Process

Considerable effort has been expended in attempting to describe or model the kinetics of the catalyzed-carbonate system,[38-40] but no generally applicable kinetic data have evolved. Equilibrium data for the system are available.[26]

The effects of temperature, pressure, ionic strength, tower hydraulics, catalyst activity, etc., combine in the HPC process to present a very complex absorption-desorption system. Apparently, $CO_2$ reacts with water to form bicarbonate and hydrogen ions as follows:

$$CO_2 + H_2O = H^+ + HCO_3^-,$$

and the reaction achieves equilibrium with only a very small fraction of the dissolved $CO_2$ in the bicarbonate form. In the presence of potassium carbonate, which provides hydroxyl ions,

$$K_2CO_3 + H_2O = 2K^+ + HCO_3^- + OH^-,$$

the hydrogen ions react with the hydroxyl ions to form water:

$$H^+ + OH^- = H_2O.$$

Thus, the $CO_2$ is progressively converted to the bicarbonate with the overall stoichiometry:

$$K_2CO_3 + H_2O + CO_2 = 2KHCO_3.$$

ORNL DWG 71-10857

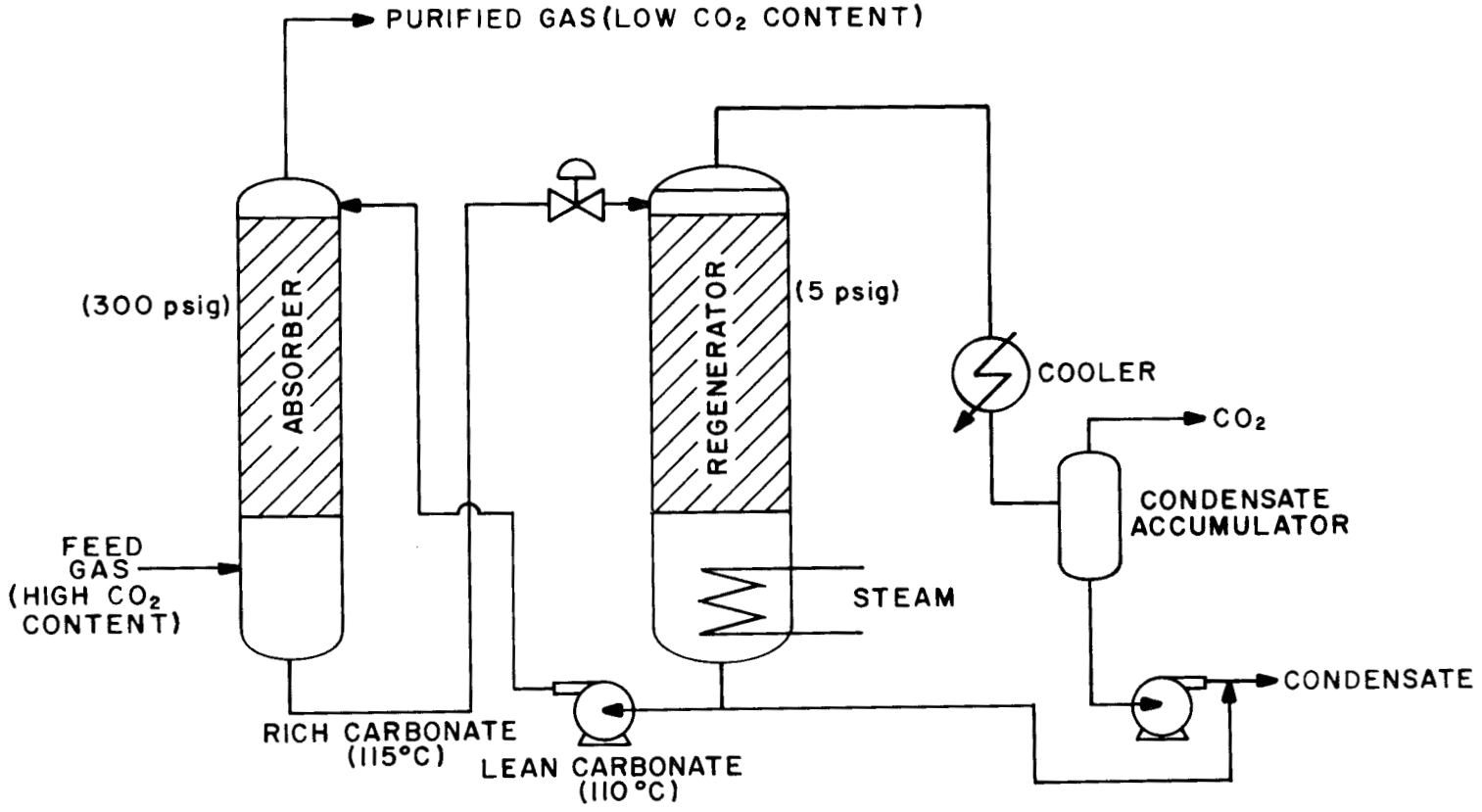


Fig. 1. Simplified Flowsheet for the Hot Potassium Carbonate Process.

The direct reaction of the $CO_2$ with the hydroxyl ions proceeds simultaneously:

$$CO_2 + OH^- = HCO_3^-;$$

and, under normal conditions, this hydroxylation effectively determines the absorption rate. However, when the ratio of carbonate to bicarbonate is low, the direct reaction with water can become relatively important. Moreover, the hydration of the $CO_2$ may be catalyzed and become more important than the hydroxylation in determining the absorption rate, even at low carbonation ratios.

Catalysts for the hydration reaction are relatively numerous, but factors such as corrosiveness, instability during regeneration, and volatility place practical limitations on a selection. Although the catalysts used in industrial processes are rarely disclosed, arsenite is reportedly used for at least one such process.[33]

### 4.2 Application of the HPC Process to the TURF Off-Gas

The use of the HPC process for removing $CO_2$ from the TURF head-end off-gas will depend on characteristics and conditions peculiar to that off-gas. The literature reviewed earlier indicates that the HPC process is generally superior to any other absorption-desorption process for removing $CO_2$ from highly concentrated gas mixtures. The head-end off-gas from the demonstration study at TURF will contain a much higher percentage of $CO_2$ than the gases normally input to commercial HPC systems and, therefore, would appear to be most compatible with the HPC flowsheet for $CO_2$ removal. For the TURF operation, however, the initially high $CO_2$ content of the off-gas may make prolonged contacting with the aqueous phase necessary in order to effect the desired separation.

The behavior of the key component of the head-end off-gas from TURF (i.e. Kr) under conditions of high pressure (20 atm) and prolonged contacting is critical. In the event that any significant fraction of the Kr present in the entering gas should be lost to the aqueous phase and then expelled with $CO_2$ in regeneration, the HPC process would not give the required decontamination of the off-gas.

A partial flashing of the spent aqueous stream prior to regeneration, with flashed gases then recycled to the absorber, would strip out or recover the dissolved noble gases. In addition, such a recycle would aid in maintaining an effective flow of gas in the absorber. (In a single absorber processing all of the entering $CO_2$, the exit gas rate might be as low as one-tenth of the inlet gas rate.)

Final scrubbing of the carbonate-treated off-gas with caustic to remove the last fraction of the acid gas that entered the carbonate process could reduce the total contact time of the gas, as well as provide makeup for the carbonate process or a neutralizing agent for acid waste streams.

It is very likely that a catalyst would be used as an aid both in absorption and in desorption of the $CO_2$. In the literature, sieve tray towers and packed columns have received the most attention as contact devices. However, it is possible that a more favorable contactor could be found for the liquid-film-controlled process for a gas mixture containing 90% $CO_2$.

## 4.3 Estimates of the Size of Absorber to Be Used in the TURF Demonstration

In view of the many variations of absorber design possible, the lack of adequate design data, and the meager information concerning the likely behavior of the krypton, only a simplified estimate of equipment sizes was attempted. The basic calculations are illustrated in Appendix A. The assumed operational basis for the calculations is that a specified gas mixture (below) is to be processed by three packed absorption sections.

### 4.3.1 Feed Gas

The feed gas is assumed to consist of a mixture of $CO_2$, $O_2$, and $N_2$ at flow rates of 27.0, 2.1, and 0.9 scfm, respectively.

The gas mixture is processed in three packed sections sequentially so that single sections take only a fraction of the liquid flow and are, therefore, smaller in diameter than a single column. Section I removes

40% of the original carbon dioxide, section II removes 35%, and section III removes the remaining carbon dioxide such that the exit purified gas stream contains 1% $CO_2$.

### 4.3.2 Liquid Streams

The compositions of the liquid streams were assumed to be as follows:

Fresh liquor - 20% (equivalent) potassium carbonate, 20% converted to the bicarbonate form.

Spent liquor - 60% converted to the bicarbonate form.

Liquor flow rate - total liquor flow rate is 13.5 gpm

Fresh liquor is passed to each packed section from the regeneration system. The packed sections are thus operated in series with respect to the gas phase and in parallel with respect to the liquid phase.

### 4.3.3 Estimates of the Sizes of the Packed Sections

Information on the packed sections is given in the table below:

| Process Streams | Section I | Section II | Section III |
|---|---|---|---|
| Feed gas, scfm | 30.0 | 19.2 | 9.75 |
| Exit gas, scfm | 19.2 | 9.75 | 3.03 |
| Liquor rate, gpm | 5.4 | 4.7 | 3.4 |
| Section Size | | | |
| Height, ft | 4.5 | 4.4 | 12.7 |
| Diameter, NPS-in. | 8 | 8 | 6 |

Each packed section is assumed to be made of sched 80 pipe and to be operated at 300 psig and 110°C. Packing for all sections is 1/2-in. ceramic raschig rings.

The estimates of the HPC absorbers were based on several assumptions, and the stated sizes are smaller than one might expect in view of the requirements. In general, the data used in the absorber calculations are extrapolations of data reported for HPC absorbers processing gas mixtures containing much less $CO_2$ than would be present in a burner off-gas.

Because such extrapolations, although necessary in many instances, are notoriously untrustworthy, extreme caution must be used in attaching vital significance to the lengths of the packed sections reported above. The column diameters, on the other hand, were based on generalized packed column flooding correlations using the specified liquid and gas flow rates and should be reliable.

## 5. SIMPLE DISTILLATION OF LIQUID CARBON DIOXIDE (DLC)

Low-temperature distillation is often used successfully on a commercial basis, such as in the production of liquid air, nitrogen, and oxygen. For the burner off-gas separation in the TURF demonstration, Kr is the component of primary interest and must be quantitatively recovered. However, this noble gas is of intermediate volatility and is present along with much larger amounts of less-volatile $CO_2$ and more-volatile $N_2$, $O_2$, and possibly CO. Since solid $CO_2$ has a vapor pressure of 5.1 atm at its melting point, pressures above 5.1 atm are necessary for operation with liquid $CO_2$. Experimental data for the distribution of Kr between the liquid and gas phases, which is of prime concern in the separation processes, have only recently become available.

The physical properties of the constituents of burner off-gas (Table 3) show that Kr and Xe should be more volatile than $CO_2$ and less volatile than $N_2$, $O_2$, and CO. A preliminary step before distillation would be the removal of CO, $H_2$, and/or $O_2$ by a catalytic oxidation-reduction or some other treatment. While the concentrations of CO and $O_2$ might be well below the explosive limits in the burner off-gas, removal of the $CO_2$ could increase the CO-$O_2$ concentrations to within the explosive limits.

A distillation to separate liquid $CO_2$ from the more-volatile constituents could be followed by a second distillation or some other process to separate Kr from $N_2$-$O_2$-CO (Fig. 2). The two distillation steps have different requirements and will be discussed separately. Typical subsequent treatments and their effects on the vapor composition are:

Table 3. Physical Properties of the Constituents of Burner Off-Gas

| Property | Constituents of Burner Off-Gas | | | | | |
|---|---|---|---|---|---|---|
| | $CO_2$ | Xe | Kr | $O_2$ | CO | $N_2$ |
| Molecular weight | 44.01 | 131.3 | 83.7 | 32.0 | 28.01 | 28.02 |
| Melting point, °C | -56.6[a,b] | -140.0 | -169.0 | -218.4 | -207.0 | -209.90 |
| Boiling point, °C | -78.5[b] | -109.1 | -151.8 | -183.0 | -192.0 | -195.80 |
| Critical temperature, °C | 31.1 | 16.6 | - 63.0 | -118.8 | -139.0 | -147.10 |
| Critical pressure, atm | 73.0 | 58.2 | 54.0 | 49.7 | 35.0 | 33.50 |
| Heat of vaporization, kcal/g-mole | 3.8 | 3.2 | 2.2 | 1.64 | 1.40 | 1.34 |
| Solubility parameter[c] $(cal/cc)^{1/2}$ | 6.0 | 7.5 | 6.4 | 4.0 | 3.13 | 2.58 |

[a]At 5.2 atm.

[b]Sublimes at 1 atm.

[c]At 25°C.

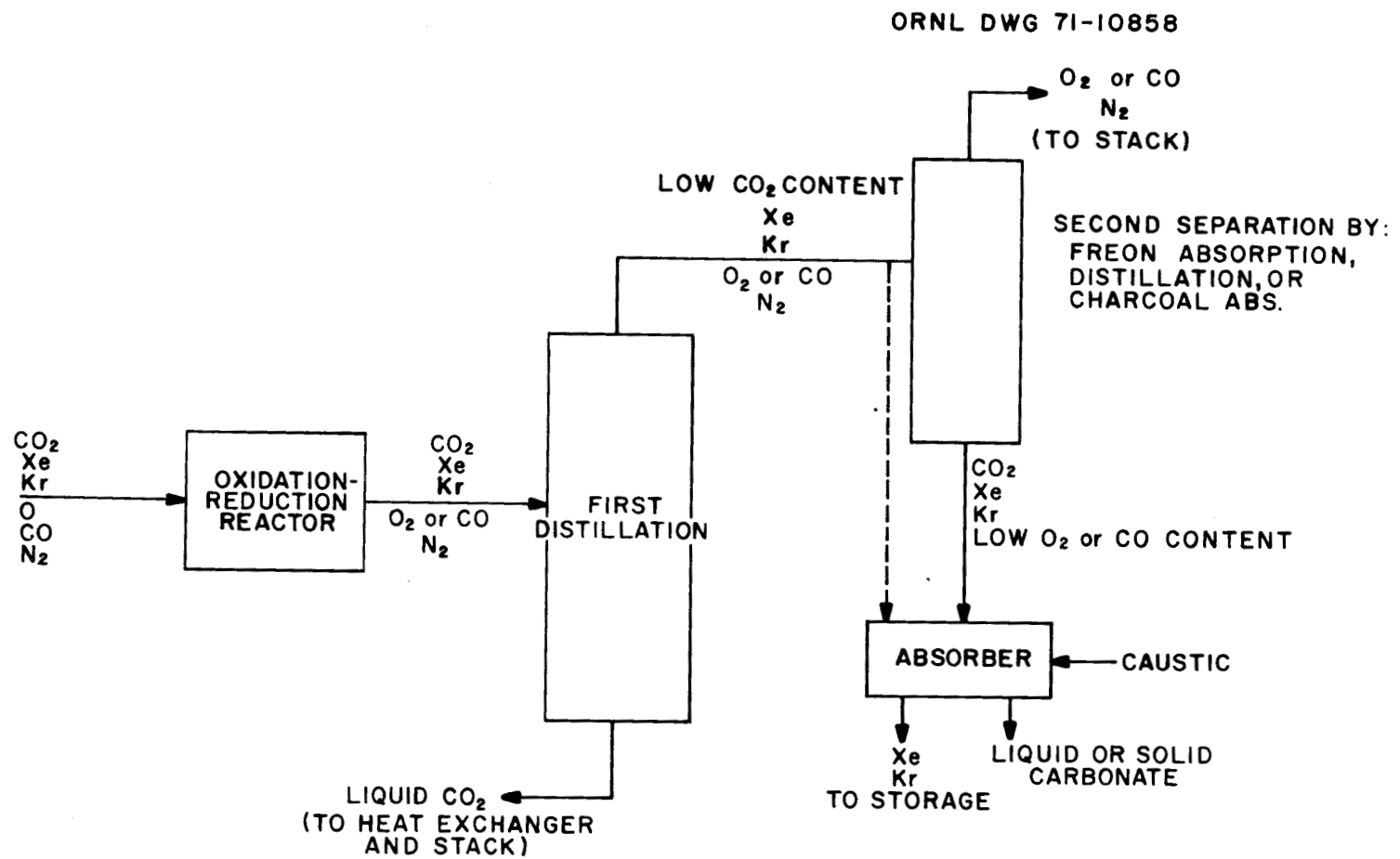


Fig. 2. A Generalized Process Flowsheet for Removing Liquid $CO_2$ by Distillation.

1. Complete Storage of Xe-Kr-$N_2$. - This would give the simplest process (perhaps no second separation), as shown by the dashed line in Fig. 2, but it would also give the largest volume of gas to be stored. Since there is no step for removing $N_2$ or $O_2$, the volume of $N_2$ must be minimized by using $O_2$ having a low $N_2$ content and by using a separable gas for instrument purge gas. The preliminary treatments must be selected to give low CO and $O_2$ contents since these are not subsequently separated from the Kr. A small volume of vapor may be unfavorable for $CO_2$-Kr separation; therefore, it may be necessary to allow the $CO_2$ concentration in the vapor stream leaving the distillation to be appreciable and then use a caustic absorber to remove this $CO_2$. Since there is no separation of $N_2$ or $O_2$, any operating upsets that introduce large amounts of $N_2$ and $O_2$ into the system would greatly increase the storage costs.

2. Freon Extraction of Noble Gases. - This process,[20] as indicated in Sect. 3.6, can separate $CO_2$ and the noble gases from $O_2$, CO, and $N_2$. Since the $CO_2$ will tend to concentrate with the noble gases, the feed gas to the Freon extraction system must have a low $CO_2$ content. Either the vapor stream from the distillation must be about 1% $CO_2$ or less, or a caustic absorber or similar $CO_2$ removal is needed.

3. Distillation to Separate $CO_2$-Xe-Kr from $O_2$-CO-$N_2$. - The second distillation (see Sect. 5.2 for description) would take the vapor from the first distillation and discharge most of the $O_2$-CO-$N_2$ as a vapor stream containing less than 0.1% of the Kr. The liquid discharge would contain more than 99.9% of the Kr, some $O_2$, and essentially all of the Xe and $CO_2$. This separation would be similar to the intermittent batch separation of $^{85}$Kr at the Idaho Chemical Processing Plant.[27]

For any of the process combinations considered, the first distillation discharges pure $CO_2$ (probably containing Xe) at the bottom of the column and $O_2$-CO-$N_2$ containing variable amounts of $CO_2$ at the top. The $CO_2$ present in the exiting vapor stream will be 0.1 to 5% of the feed $CO_2$. The Xe-Kr concentrations are low in the feed and in both exit streams. Since Xe and Kr have intermediate volatilities, their steady-state concentrations may have a maximum value in the column. Therefore, it might be possible to remove Kr-Xe as a purge stream, with removal of decontaminated $CO_2$ at the bottom and decontaminated $O_2$-CO-$N_2$ at the top.

## 5.1 Distillation to Separate Purified $CO_2$

The first distillation (see Fig. 2) will take the burner off-gas from preliminary treatments and discharge most of the $CO_2$ as a liquid stream containing less than 0.1% of the Kr. The discharged vapor will contain more than 99.9% of the Kr, as well as $N_2$, CO, $O_2$, and a small amount of $CO_2$; the composition will be dependent on the preliminary treatments prior to distillation and the requirements of subsequent treatment steps.

Some approximate operating conditions for the first distillation can be selected by inspection of the requirements. Below the feed point, the column will be operating on nearly pure $CO_2$ to decrease the Kr concentration from about $10^{-5}$ mole fraction to about $10^{-8}$ mole fraction. The pressure will be considerably above 5.2 atm and the temperature will be above -57°C to prevent the formation of solid $CO_2$. The total pressure must be below the critical pressure of $CO_2$ (73 atm).

Above the feed point, the column is an enrichment section for $O_2$ and $N_2$ (and Kr). The other gases are so much more volatile than $CO_2$ that a serious complication may result. As a first approximation, the condensed phase is liquid only if the partial pressure of $CO_2$ is above 5.1 atm. Countercurrent column operation is not possible with solid $CO_2$, and the $CO_2$ content in the top of the column cannot be reduced to an acceptable value at temperatures above the melting point of $CO_2$. To prevent the formation of solid $CO_2$ in the column, the vapor in the column must remain either above 25% $CO_2$ for a column pressure of 21 atm or above 8% $CO_2$ for a column pressure of 65 atm. At reasonable operating pressures and allowing reasonable temperature drops for heat transfer, 30 to 40% in the exit vapor is probably the minimum practical $CO_2$ content for a completely continuous column system with no solid $CO_2$.

The separation of $CO_2$ from the $O_2$ and $N_2$ can be improved by cyclic operation of partial condensers to first condense solid $CO_2$ and then melt it in order to provide reflux of liquid $CO_2$. The partial condenser can perform as one theoretical stage of separation. The bulk of the reflux would occur by condensation of liquid $CO_2$ at temperatures near

-50°C. The use of several condensers or cold traps for solid $CO_2$ allows melting of the condensed solid $CO_2$ for reflux in one unit while the $CO_2$ in another unit is condensing. The operation is one that might be used for controlled solidification (Sect. 7), but no high decontamination from Kr is necessary since the Kr is stripped from the liquid $CO_2$ in the column.

Simplified calculations (Appendix B) indicate that distillation of the off-gas from the head-end demonstration at TURF would require about 6 to 20 theoretical stages, depending on the reflux ratios, and could thus be carried out in a column about 2 or 3 in. in diameter and 10 to 20 ft tall (packed).

### 5.2 Distillation to Separate $CO_2$-Xe-Kr from $O_2$-CO-$N_2$

A second distillation could take the vapor stream from the first distillation and discharge most of the $O_2$-CO-$N_2$ in the form of a vapor containing less than 0.1% of the Kr. The liquid stream would contain more than 99% of the Kr, some $O_2$, and essentially all of the Xe and $CO_2$.

The significance of the formation of solid $CO_2$ as an operating problem is uncertain. Experimental tests would probably be necessary since neither published data nor idealized calculations appear to be adequate for the stages of the column where sharp $CO_2$-Xe-$O_2$ concentration gradients occur. The composition of the condensed phase will not approach pure $CO_2$ at any location in the column, and the liquid Xe, Kr, and $O_2$ may dissolve the $CO_2$ so that a solid phase is not formed. The much smaller flow rates in the second column can be more easily handled at a higher pressure (and thus higher temperatures) in the column.

The Idaho Chemical Processing Plant (ICPP) has a liquid air system that uses a batch distillation to make a similar separation. The presence of $CO_2$ in their off-gas has been mentioned as a cause of operating problems.

This distillation column would require a large number of stages but would be small in diameter, perhaps 1 in. in diameter by 10 ft.

## 6. KRYPTON ABSORPTION IN LIQUID CARBON DIOXIDE (KALC)

An alternative to the distillation processes already discussed is to reverse the order of the two separations. Decontaminated $O_2$-CO-$N_2$ can be discharged from the top of the first column, with the Kr-Xe-$CO_2$ going to a second column for the Kr-$CO_2$ separation (Fig. 3). This approach is not practical in its simplest form because the reflux of liquid $O_2$-CO-$N_2$ to the top of the first column would result in the formation of solid $CO_2$ between the feed point and the top of the column. However, this problem can be avoided by using a large recycle of decontaminated liquid $CO_2$ from the second column to the top of the first column. This flow can be considered as a means for providing liquid reflux without requiring the low temperatures necessary for liquid $O_2$-CO-$N_2$. Alternatively, the liquid $CO_2$ might be considered as a scrub to remove Kr from the vapor. The minimum $CO_2$ scrub flow is about 6 moles per mole of vapor since the Kr/$CO_2$ vapor pressure ratio is about 6. The exit gas has a high $CO_2$ content since it is contacted with a large flow of pure liquid $CO_2$. The stripping of Kr from the liquid $CO_2$ in the second column must be much better than for the distillation described in Sect. 5.1 because the $CO_2$ is mostly recycled where any remaining Kr would increase the amount of Kr discharged with the $O_2$-CO-$N_2$. Because of the large recycle of $CO_2$, both columns are much larger and boilup and reflux rates of the second column are several times those of the column described in Sect. 5.1.

The arrangement with recycle $CO_2$ has two significant advantages: (1) The entire system operates with a high $CO_2$ content at all times in order to eliminate the need for refrigeration at liquid $O_2$ temperatures and to eliminate the problems associated with the formation of solid $CO_2$. (2) The Kr is separated from most of the $O_2$-CO-$N_2$ prior to concentration and is never liquefied with large amounts of $O_2$, thus alleviating the serious safety problem that would exist as the result of the formation of ozone.

Calculations are given in Appendix C to illustrate possible (but probably not optimal) process conditions. Each column would have about

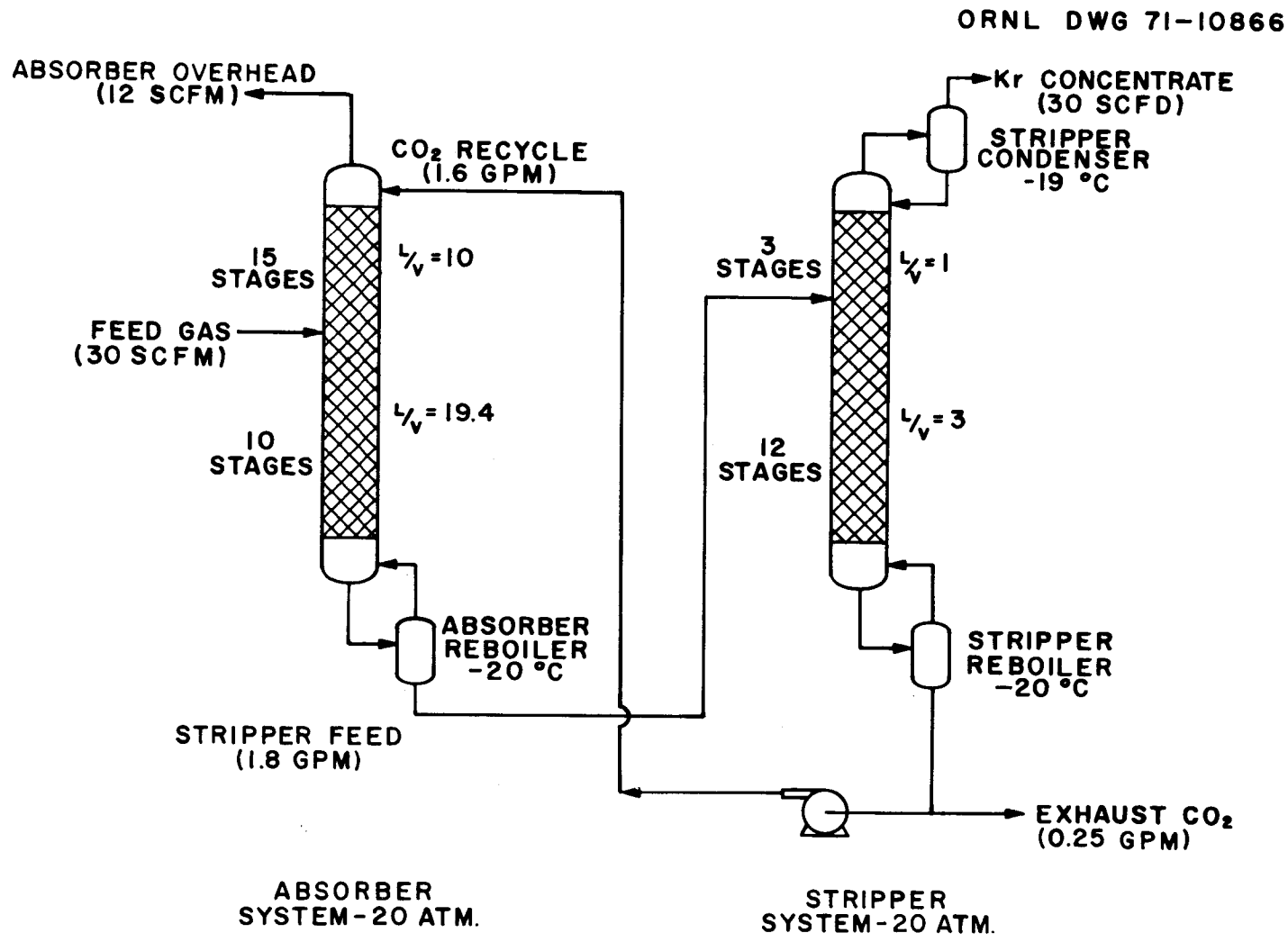


Fig. 3. Simplified Flowsheet for the KALC Process.

twice the diameter and be about twice as long as the first column for the separation described in Sect. 5.1. The total condensation rates (including the 90% condensation of the feed) would be approximately doubled, and the vapor boilup would be tripled; however, overall operation would take place at temperatures of -20 to -50°C as compared with -100 to -160°C at the vapor exit of both columns for the smaller system described in Sect. 5.1.

The only high concentrations of Kr are those in the vapor of the last several stages at the top of the second column. The large recycle of $CO_2$ results in a higher (but probably tolerable) inventory of Kr as compared with that for the distillation system described in Sect. 5.1. The operation of the system appears stable in that it does not depend on close control of flow rates. Small amounts of misoperation would result in lower decontamination factors but would not immediately give any gross discharges of Kr. The liquid $CO_2$ in the system or a storage of the liquid $CO_2$ effluent would provide an emergency source of refrigeration, which would allow a planned shutdown without any increase in the amount of Kr discharged with the decontaminated gases.

## 7. EVALUATION OF THE CONTROLLED SOLIDIFICATION OF $CO_2$

This concept involves the process by which solid $CO_2$ is formed, leaving the more volatile gases relatively free of $CO_2$. Occlusion or interstitial trapping of Kr in the solid $CO_2$ can be minimized by properly controlling the growth of the dry ice crystals.[3] This behavior is used for zone refining of metals and semiconductor materials. A high $CO_2$-Kr separation must be obtained in one stage. Multiple-stage separations, as proposed for liquid $CO_2$ in the previous section, are not practical. Both the stage-to-stage transfers of solid and the mass transfer within the solid are difficult. The countercurrent flow of fine $CO_2$ crystals and a gas might be possible if $CO_2$ "snow" was formed by throttling into the top of a chamber and strip gas was allowed to flow into the bottom of the chamber. However, this would not give a controlled growth of $CO_2$ crystals or a low $CO_2$ concentration in the exit gas. Even if this

arrangement can be used for a partial removal of $CO_2$ with an acceptable separation from Kr, some other procedure with a high $CO_2$-Kr separation is necessary to complete the process.

We have not found any published data for the $CO_2$-Kr separation by this process. Therefore, specification of a process flowsheet and evaluation of the process cannot be done until we obtain results from small-scale laboratory studies of the $CO_2$-Kr separation. If the required separations cannot be demonstrated on a laboratory scale, the process is not practical. If the small-scale results demonstrate the required separations, then the second stage of evaluation will be concerned with determining the practicality of large-scale operations under process conditions.

## 8. CONCLUSIONS AND RECOMMENDATIONS

The actual amount of off-gas from the reprocessing of HTGR fuel elements is uncertain at present but is indicated by the fact that burning of the graphite matrix will certainly be a head-end reprocessing step. The primary decontamination problem will be the separation of trace quantities of $^{85}Kr$ from large quantities of gas, comprised mostly of $CO_2$ but also containing smaller (although significant) amounts of $O_2$, $N_2$, and possibly CO. Other fission products and burner gas components can be dealt with by more straightforward techniques and may be temporarily ignored until a satisfactory approach to the first-order problem is in hand. An important objective of the off-gas treatment is the accumulation of the Kr in a sufficiently concentrated form to allow economical storage. The anticipated isotopic content of the noble gases indicates that the concentration will not exceed radiation limits for simple, economical containers.

Certain physical similarities of Kr and $CO_2$ appear to preclude the practical use of several processes commonly employed or suggested for noble-gas retrieval. Specifically, membrane permeation, charcoal and molecular sieve adsorption, and selective physical absorption by a third

component are dismal prospects for separation processes applicable to head-end reprocessing of HTGR fuel elements. Thermal diffusion, hot-metal trapping, and chemical reaction of the noble gases are not practical for the amount and composition of burner off-gas.

Of the processing schemes reviewed, four seem to hold potential for effecting the desired separation. In no case can feasibility be ensured by available information; on the other hand, no available information precludes feasibility. The assumptions necessary for the analysis which indicated their potential are thought to be plausible. Within the prevailing uncertainties, none of the processes have prohibitive costs; however, there is no clearcut economic basis for rejecting or favoring any one of them. Each of the four should be pursued at least to the point where the principles upon which its technical feasibility depends can be validated or rejected.

In order of preference, the four processes are:

(1) Krypton Absorption in Liquid $CO_2$ (KALC)

(2) Controlled Solidification of $CO_2$ (CSC)

(3) Hot Potassium Carbonate Absorption of $CO_2$ (HPC)

(4) Simple Distillation of Liquid $CO_2$ (DLC)

The KALC flowsheet is the only one that accomplishes both separation and concentration of the Kr. It has the outstanding advantages that the Kr is separated from the CO, $N_2$, and almost all of the $O_2$ early in the process and that all process streams are fluid, operating well above the melting point of the $CO_2$. The columns and heat exchangers are larger than those required for the simple distillation separation but are within the same order of magnitude and operate generally at less extreme temperatures. The primary uncertainty in this process is the distribution coefficient for Kr between liquid $CO_2$ and the various gases. While this coefficient is known with sufficient accuracy to establish the plausibility of the separation, the design of engineering experiments and process evaluation will require more precise values. The experimental program can be greatly accelerated if the Freon Absorption Pilot Plant, currently under development at the Oak Ridge Gaseous Diffusion Plant,

can be operated with liquid $CO_2$ to make large-scale tests. Attempts at effecting this should receive high priority.

The CSC process promises a very high separation factor between $CO_2$ and Kr in a single stage. This process has the disadvantage of affording no separation between Kr and the other light gases and requires batchwise handling of the solid $CO_2$. Of primary importance in an experimental program for the development of this process is a quantitative value for the adsorption of Kr in $CO_2$ crystals and the release characteristics accompanying a reduction in pressure. Validation of the expected high separation factor is necessary before further work can be justified.

The HPC flowsheet boasts a history of industrial application. However, the burner off-gas requirements are sufficiently different from the common industrial requirements and the process chemistry is sufficiently complex that the mass transfer coefficients can only be estimated to fall within a range of values. Therefore, the total HPC equipment required may be either larger or smaller than the equipment for low-temperature processes. The pump sizes and power requirements for the aqueous system will be less than the corresponding compression requirements for the refrigeration of low-temperature processes. The HPC flowsheet will require heat for regeneration, but this may be available at no cost (for example, by cooling hot burner off-gases). The major uncertainty is the solubility of Kr in the carbonate solution, which would receive first attention in the evaluation of this process. Engineering experiments ought to include the operation of an HPC absorption column or a complete HPC system to provide mass transfer data for design.

The DLC flowsheet probably requires only experimental information, which is also needed for evaluation of the other processes. However, because each of the other three processes offers significant advantages over the DLC flowsheet, we would expect to use simple distillation only if disappointing experimental results are obtained for the three more favorable processes. Thus, we do not recommend that any special experimental studies of the distillation system be made.

# 9. APPENDIXES

## 9.1 Appendix A: Estimation of HPC Process Absorber Sizes for TURF Head-End Off-Gas

Illustrative calculations are presented for the estimation of packed absorber sizes typical of those which might be used in the TURF demonstration. These calculations are based on the flowsheet shown as Fig. A-1.

The total system pressure and the temperature are assumed to be 300 psig and 110°C, respectively, throughout. Section I removes 40% of the feed $CO_2$; Section II removes 35%; and Section III removes the remaining $CO_2$ down to a final value of 1% in the exit gas. The scrub liquor has a potassium concentration equivalent to 20 wt % $K_2CO_3$. The compositions of the scrub liquor streams leaving the absorbers and returning from the regeneration operation are equivalent to 60% and 20%, respectively, converted to $KHCO_3$.

From a material balance for the absorber system, the various process streams are specified as follows:

| | Section I | Section II | Section III | Exit |
|---|---|---|---|---|
| Vapor, scfm | 30.0 | 19.2 | 9.7 | 3.03 |
| $CO_2$ | 27.0 | 16.2 | 6.75 | 0.03 |
| $O_2$ | 2.1 | 2.1 | 2.1 | 2.1 |
| $N_2$ | 0.9 | 0.9 | 0.9 | 0.9 |
| Liquid, gpm | 5.4 | 4.7 | 3.4 | 13.5 |

Using the generalized flooding velocity correlation for packed towers,[41] the cross-sectional areas of the packed sections are found to be:

| Section | Diameter Sched 80, NPS (in.) | Percent Flooding |
|---|---|---|
| I | 8 | 72 |
| II | 8 | 59 |
| III | 6 | 67 |

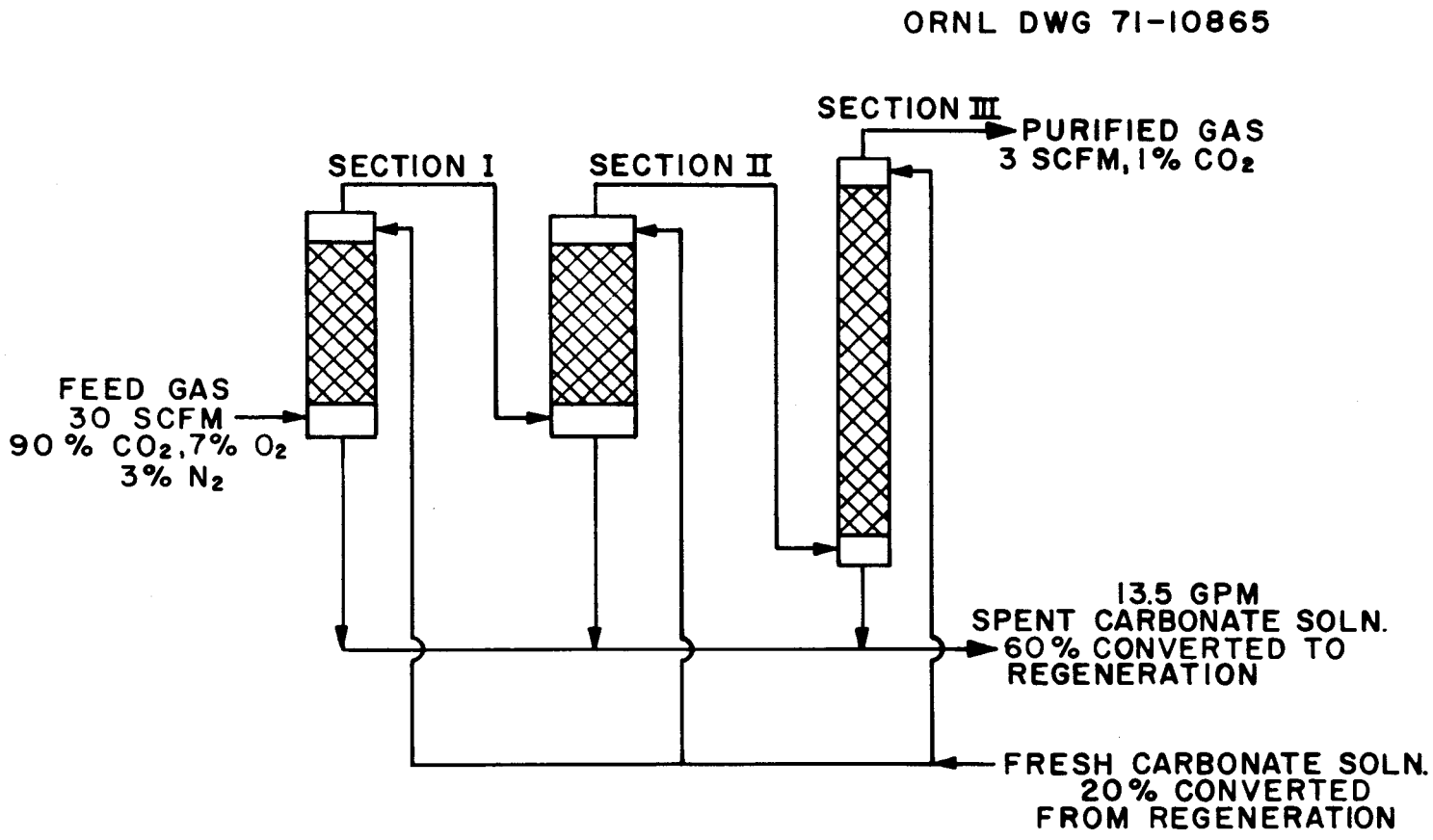


Fig. A-1. Flow Scheme for HPC Process Calculations.

The estimation of packing height required for a given operation requires values of mass transfer coefficients for a specified gas-liquid system. Benson et al.[24] present values of the coefficient as determined in pilot-plant studies of the HPC process using 40% (equivalent) potassium carbonate (see Fig. A-2). Subsequently, Buck and Leitch[35] found that more realistic values of the coefficient, $K_G a$, in actual plant operation were only about 60% of those reported by Benson.

The addition of catalyst to the carbonate solution effectively increases the mass transfer rates, and Eickmeyer[42] indicates a typical increase of 2.5 times the uncatalyzed rates.

In absence of directly applicable mass transfer data, the values of $K_G a$ used here to estimate the packing heights are those of Benson et al.,[24] modified by the factors indicated above.

It is reasonable to expect that formulating a $K_G a$ value from such varied sources and conditions could lead to rather large discrepancies in actual vs calculated tower performances.

Using the estimated values of $K_G a$, equilibrium data for the 20% carbonate solution (Fig. A-3), and other data relating to stream flows, etc., the standard design equation for packed towers,[41]

$$\text{height} = \int_{\bar{P}_1}^{\bar{P}} \frac{V}{K_G a A} \frac{d\bar{p}}{(\pi - \bar{p})\,(\bar{p} - \bar{p}^*)} ,$$

has been solved for the various packing heights. The results of the graphical integration of the design equation are as follows:

| Section | Height (ft) |
|---|---|
| I | 4.3 |
| II | 4.4 |
| III | 12.7 |

A summary of the absorber system specifications is given in Table A-1.

ORNL DWG 71-10861R1

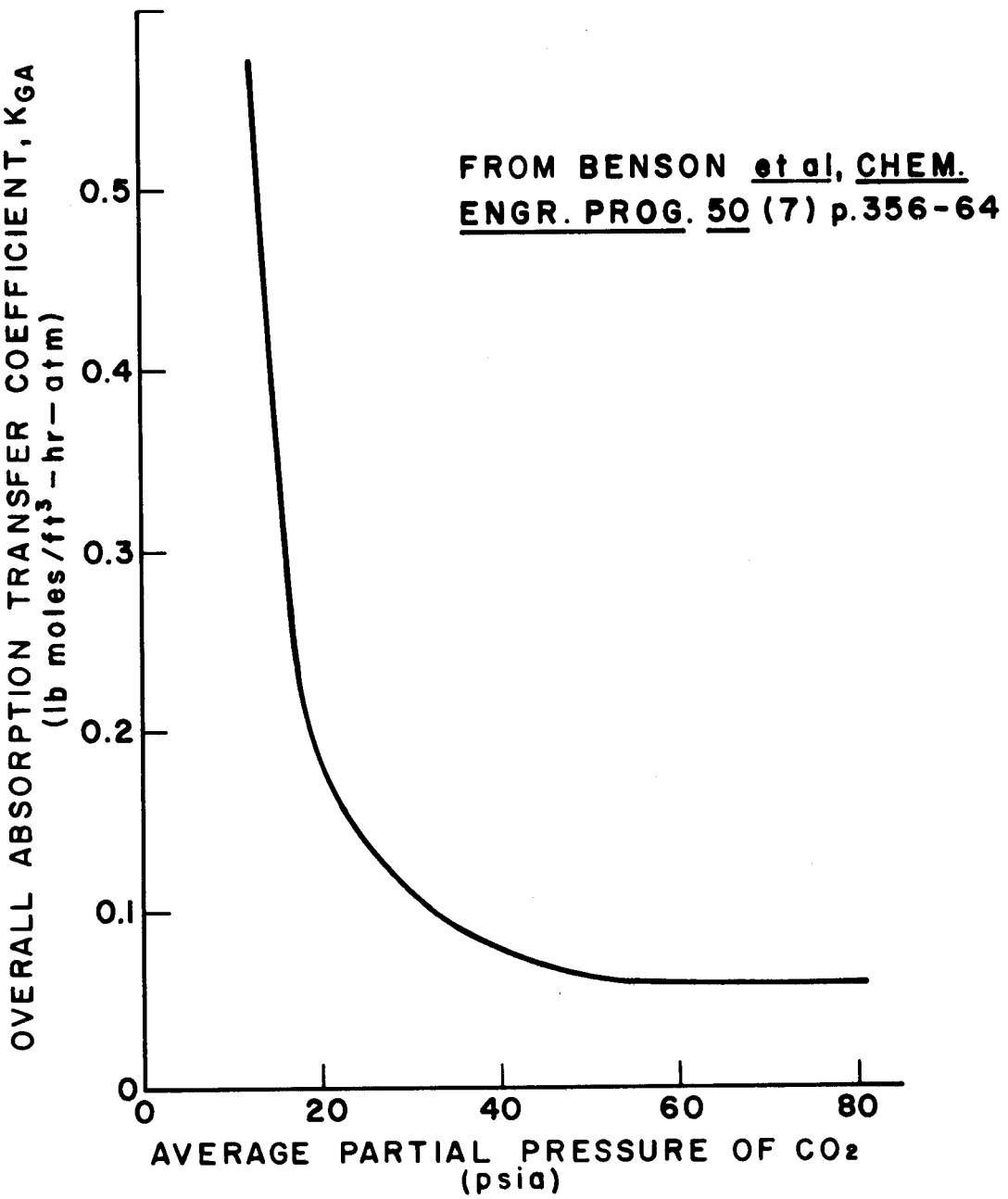


Fig. A-2. Mass Transfer Coefficients Used in the HPC Process Calculations.

ORNL DWG 71-10862RI

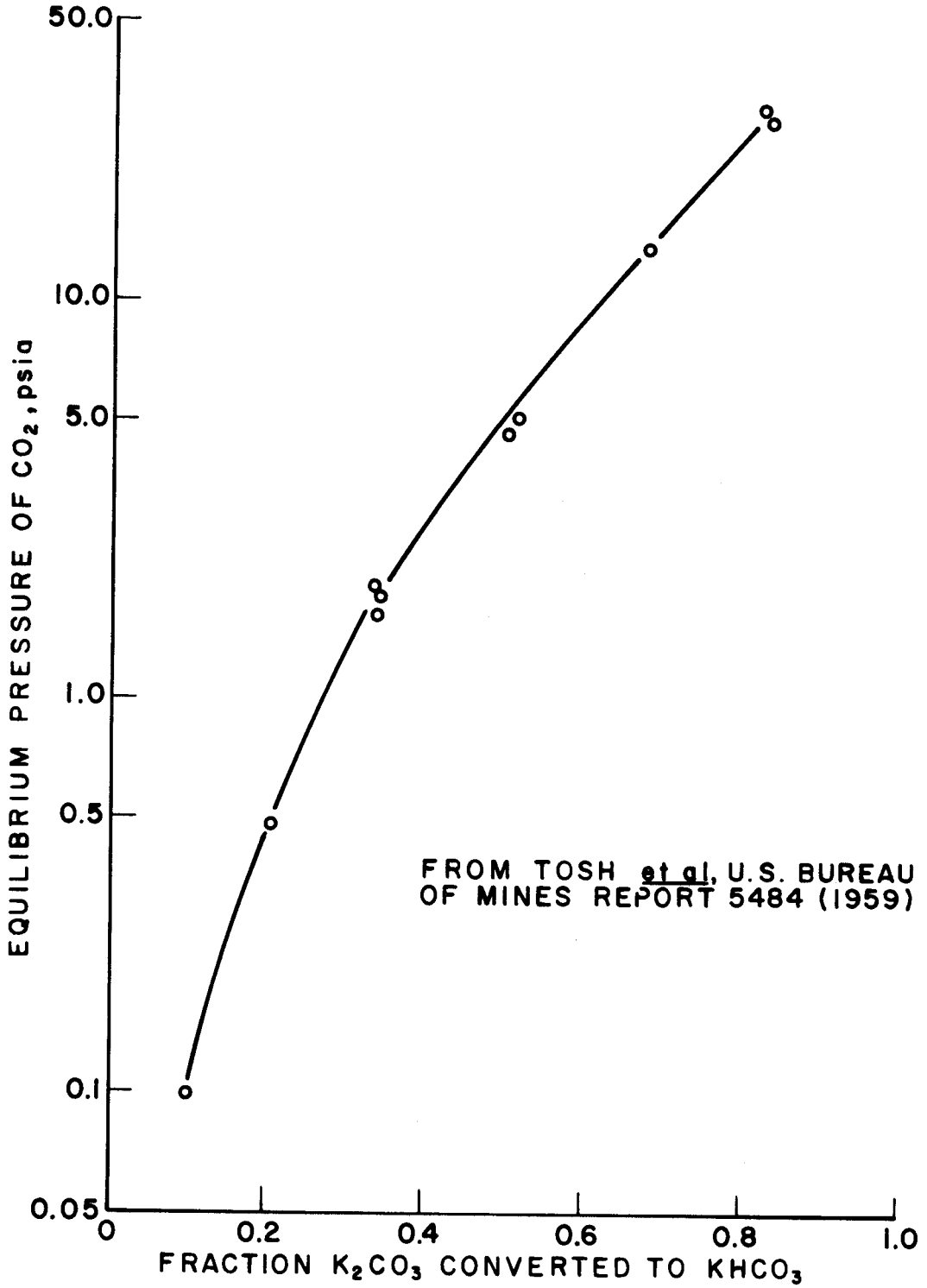


Fig. A-3. Equilibria Data for 20% (Equivalent) Potassium Carbonate System.

Table A-1. Summary of Section Design Data

| | Section I | Section II | Section III |
|---|---|---|---|
| Gas feed rate, scfm | 30.0 | 19.2 | 9.75 |
| $CO_2$ removal, % of feed | 40.0 | 35.0 | 24.9 |
| Liquor rate, gpm | 5.4 | 4.7 | 3.4 |
| Conversion on entry, % | 20 | 20 | 20 |
| Conversion on exit, % | 60 | 60 | 60 |
| Gas-phase driving force, psi | | | |
| Entering | 274.8 | 257.1 | 209.5 |
| Leaving | 265.1 | 217.4 | 2.7 |
| Average gas density, $lb/ft^3$ | 1.814 | 1.783 | 1.697 |
| Liquid density, $lb/ft^3$ | 72.3 | 72.3 | 72.3 |
| Total pressure, psig | 300 | 300 | 300 |
| Temperature, °C | 110 | 110 | 110 |
| Packing | ——— | 1/2-in. raschig rings | ——— |
| Packed section sizes | | | |
| Diameter, in. | 8 | 8 | 6 |
| Height, ft | 4.3 | 4.4 | 12.7 |
| $K_G a$, estimated ($lb\text{-moles}/hr \cdot ft^3 \cdot atm$) | 0.075 | 0.075 | 0.075-1.275 |

## 9.2 Appendix B: Estimation of Equipment Sizes for Simple Distillation to Decontaminate $CO_2$

The purpose of the following calculations is to determine the size of the equipment that would be required for a simple distillation to separate $CO_2$ from krypton prior to discharge. The exit gas stream from the top of the column is primarily $O_2$-CO-$N_2$; it must contain more than 99.9% of the krypton and must have a low $CO_2$ content to simplify the final processing and storage of the $^{85}Kr$.

The calculations are made for an $O_2$-Kr-$CO_2$ system with 3 scfm of $O_2$ in the feed. Since $N_2$ and CO are more volatile than $O_2$, any conditions that give acceptable separations of $O_2$ would provide effective separations for the same flow of $N_2$-CO-$O_2$ mixtures. Although xenon is present in larger amounts than krypton and is more difficult to separate, the xenon radioactivity is low level, and xenon separations are not considered.

Most of the stages of the distillation column will be operated at a high, essentially constant $CO_2$ content and will have constant separation factors. Thus, detailed calculations are required only for the stages in which the $CO_2$ content varies. All calculations are for 20-atm pressure. The liquid-gas distribution coefficients can be estimated by Raoult's law. The exact values depend on the extrapolation of Kr and $O_2$ vapor pressures; the values used for -19°C are:

$$K_{Kr} = \left(\frac{y}{x}\right)_{Kr} = 6,$$

$$K_{O_2} = \left(\frac{y}{x}\right)_{O_2} = 25.$$

In order for the column to separate decontaminated liquid $CO_2$ from Kr-$O_2$ vapor having a low $CO_2$ content, the reflux condenser will consist of a combination of a liquid condenser at about -50°C and a cyclic cold-trap system at about -100°C. The cold traps provide less than 20% of the reflux, and some flow variations with time can be tolerated. The solid-gas distribution coefficients should be much larger than those for liquid-gas, but the liquid-gas coefficients calculated from Raoult's law will be used as conservative values for the cold traps.

Estimations of Flow Rates and Number of Theoretical Stages. - The separation factor for stripping krypton from the liquid $CO_2$ should be sufficiently large to give a moderate number of stages. For a separation factor of 2 below the feed stage,

$$\frac{V}{L} = 2/K_{Kr} = 1/3,$$

where

V = vapor flow rate,

L = liquid flow rate.

For a feed containing 90% $CO_2$, with 90% liquid and essentially all the feed $CO_2$ leaving the reboiler, the flow rates below the feed plate are V = 13.5 scfm and L = 40.5 scfm. The other flow rates shown in Fig. B-1 are established by simple material balances and the assumed separation requirements.

Equilibrium compositions, in mole fractions, at four temperatures are:

| | -100°C (Cold Trap) | -50°C (Condenser) | -46°C (Feed) | -20°C (Column) |
|---|---|---|---|---|
| $O_2$ in vapor | 0.994 | 0.693 | 0.63 | 0.050 |
| Kr in vapor | $10^{-3}$ | $3.7\ X_c$ | $3.1 \times 10^{-4}$ | $6X_s$ |
| $CO_2$ in vapor | 0.005 | 0.307 | 0.37 | 0.95 |
| $O_2$ in liquid | 0.206 | 0.043 | 0.036 | .0019 |
| Kr in liquid | $1.2 \times 10^{-3}$ | $X_c$ | $0.77 \times 10^{-4}$ | $X_s$ |
| $CO_2$ in liquid | 0.794 | 0.957 | 0.964 | 0.998 |

A material balance on the cold trap system, $Y_C = Y_{TR} + X_{TR}$, gives:

| | $O_2$ (scfm) | Kr (scfm) | $CO_2$ (scfm) | Total scfm |
|---|---|---|---|---|
| $Y_{TR}$ | 3.00 | $30 \times 10^{-4}$ | 0.015 | 3.02 |
| $X_{TR}$ | 0.39 | $23 \times 10^{-4}$ | 1.49 | 1.88 |
| $Y_C$ | 3.39 | $53 \times 10^{-4}$ | 1.500 | 4.90 |

ORNL DWG 71-10863R1

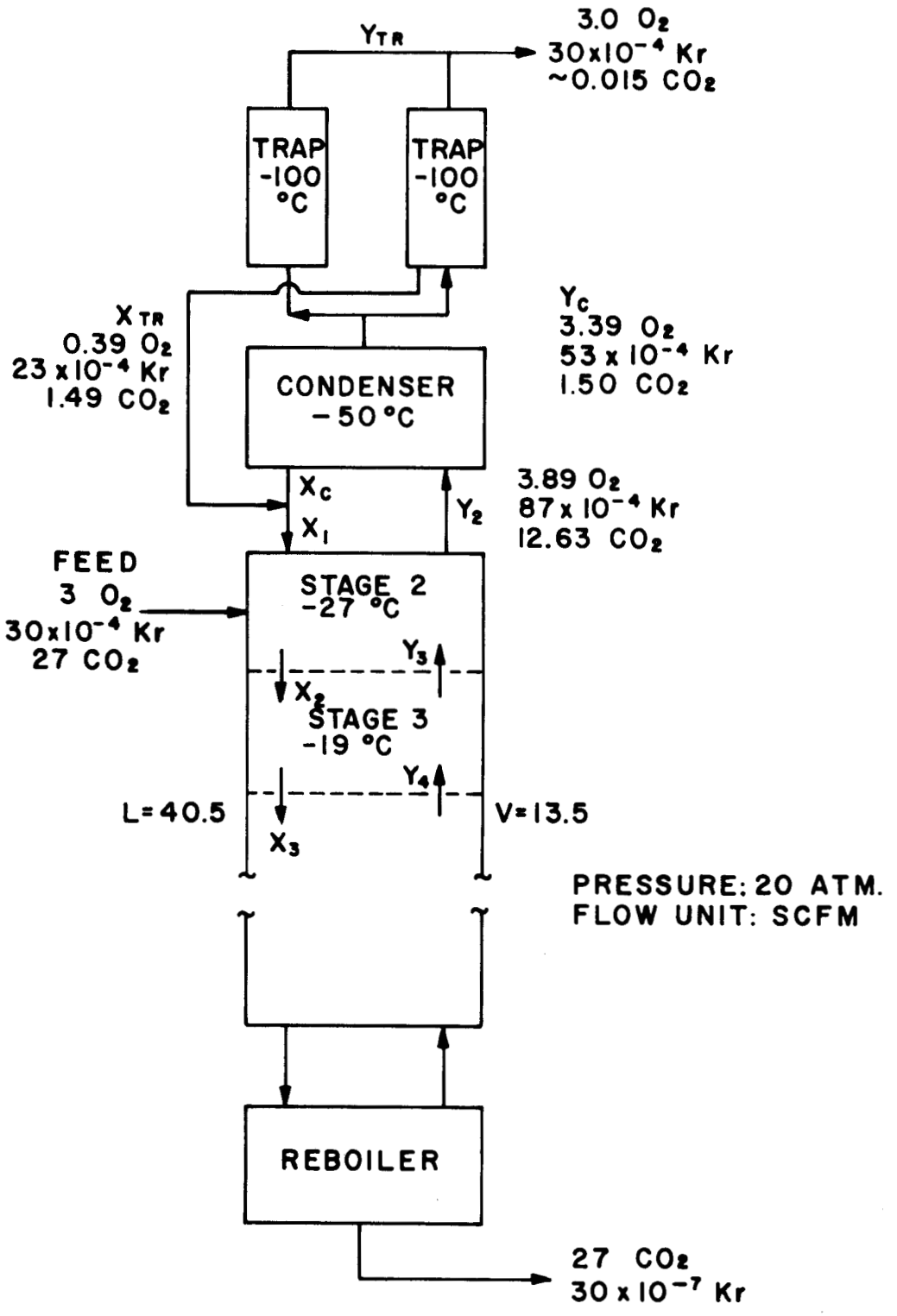


Fig. B-1. Process Model for DLC Calculations.

The combined material balances for the condenser and the cold trap give:

| | $O_2$ | Kr | $CO_2$ | Total |
|---|---|---|---|---|
| $X_{TR}$, scfm | 0.39 | $23 \times 10^{-4}$ | 1.49 | 1.88 |
| $X_C$, scfm | 0.50 | $34 \times 10^{-4}$ | 11.12 | 11.62 |
| $X_1$, scfm | 0.89 | $57 \times 10^{-4}$ | 12.61 | 13.50 |
| $Y_{TR}$, scfm | 3.00 | $30 \times 10^{-4}$ | 0.015 | 3.02 |
| $Y_2$, scfm | 3.89 | $87 \times 10^{-4}$ | 12.63 | 16.52 |
| $y_2$, mole fraction | 0.236 | $5.3 \times 10^{-4}$ | 0.764 | 1.000 |

The values of $y_2$ indicate that the feed should enter the top of the column, and the temperature and liquid compositions (in mole fractions) corresponding to $y_2$ are T = -27°C, 0.010 $O_2$, $1.0 \times 10^{-4}$ Kr, and 0.990 $CO_2$. Then the material balance for the feed stage is:

| | $O_2$ | Kr | $CO_2$ | Total |
|---|---|---|---|---|
| $X_2$, scfm | 0.41 | $41 \times 10^{-4}$ | 40.09 | 40.5 |
| $Y_2$, scfm | 3.89 | $87 \times 10^{-4}$ | 12.63 | 16.52 |
| | 4.30 | $128 \times 10^{-4}$ | 52.72 | 57.02 |
| Feed, scfm | 3.00 | $30 \times 10^{-4}$ | 27.0 | 30.0 |
| | 1.30 | $98 \times 10^{-4}$ | 25.72 | 27.02 |
| $X_1$, scfm | 0.89 | $57 \times 10^{-4}$ | 12.61 | 13.50 |
| $Y_3$, scfm | 0.41 | $41 \times 10^{-4}$ | 13.11 | 13.52 |
| $y_3$, mole fraction | 0.030 | $3.0 \times 10^{-4}$ | 0.970 | 1.000 |

The remaining stage calculations would be similar to those for stage 2 without a feed stream. However, since $X_2$ is 0.990 mole fraction $CO_2$ and $Y_3$ is 0.970 mole fraction $CO_2$, the use of separation factors will be adequate with all stages at -19°C. The composition of the final $CO_2$ liquid should be about $10^{-7}$ mole fraction Kr (or $30 \cdot 10^{-7}$ scfm of Kr), which requires a further separation factor of $10^3$.

$2^n = 10^3$ or n = 10 additional stages.

Thus the column would require 10 stages, the reboiler, the condenser, and the cold trap. The oxygen decontamination factor would be $[(25)(1/3)]^{10}$ or $>10^9$.

Column Diameter and Heat Fluxes. - Generalized flooding correlations and a viscosity correction for the low viscosity of liquid $CO_2$ indicate a liquid flooding rate of about 10,000 lb/hr·ft$^2$. Converting to units for $CO_2$, this indicates a liquid flooding rate of 1400 scfm/ft$^2$ or a column diameter of 2.3 in. The heat fluxes can be estimated from the flow rates using the heat of vaporization of $CO_2$.

$$\Delta H_v = \frac{(44)(130)}{359}(60) = 950 \ \frac{\text{Btu}}{\text{hr} \cdot \text{scfm}}$$

To condense 90% of the feed gas, q = 25,000 Btu/hr. The condenser and cold trap together have heat loads of about 13,000 Btu/hr. The reboiler heat flux is also about 13,000 Btu/hr. None of these values allows for heat transfer from the surroundings.

## 9.3 Appendix C: Estimation of Flow Rates and Equipment Sizes for Krypton Absorption in Liquid $CO_2$ (KALC)

The purpose of the following calculations is to illustrate that the KALC process is feasible in equipment of reasonable size. Consideration of all constituents would give a complex system, and distribution coefficients are not available to made precise calculations. Therefore, only critical components of the mixtures are considered and flow rates were set near the middle of allowable ranges without any further optimization.

The KALC process has three principal separations involving three different liquid/gas flow rate limitations and is, therefore, most conveniently carried out in three columns (Fig. C-1). In the first absorber column, pure liquid $CO_2$ is used to scrub krypton from the more volatile gases, which can then be discharged. The flow rate of the liquid $CO_2$ must be large enough to absorb more than 99.9% of the krypton; however, an excessive flow rate will absorb too much $O_2$. The gas-phase flow should be as small as is practical in order to minimize the overall equipment size. The amount of $CO_2$ in the exit gas is not otherwise significant since excess $CO_2$ is discharged after decontamination. In the second (fractionator) column, most of the $O_2$ and more volatile gases must be stripped out of the liquid $CO_2$ for recycle to the first column. The gas flow must be large enough to allow efficient stripping of $O_2$, but excess gas flow must be avoided to minimize the recycle of krypton. The krypton and any remaining more-volatile gases are discharged as a concentrated gas stream from the third (stripper) column.

The calculations are made for an $O_2$-Kr-$CO_2$ system with 3 scfm of $O_2$ in the feed. Since $N_2$ and CO are more volatile than $O_2$, any conditions that give acceptable separations of $O_2$ would give more effective separations for the same flow of $N_2$-CO-$O_2$ mixtures. Although xenon is present in larger amounts than krypton and is more difficult to separate, the radioactivity level of the xenon is low, and the xenon separations are not considered. The concentrations of krypton are so small for all parts of the system except the final one or two stages in the top of the stripper that the phase properties are determined by the $O_2$-$CO_2$ concentrations alone.

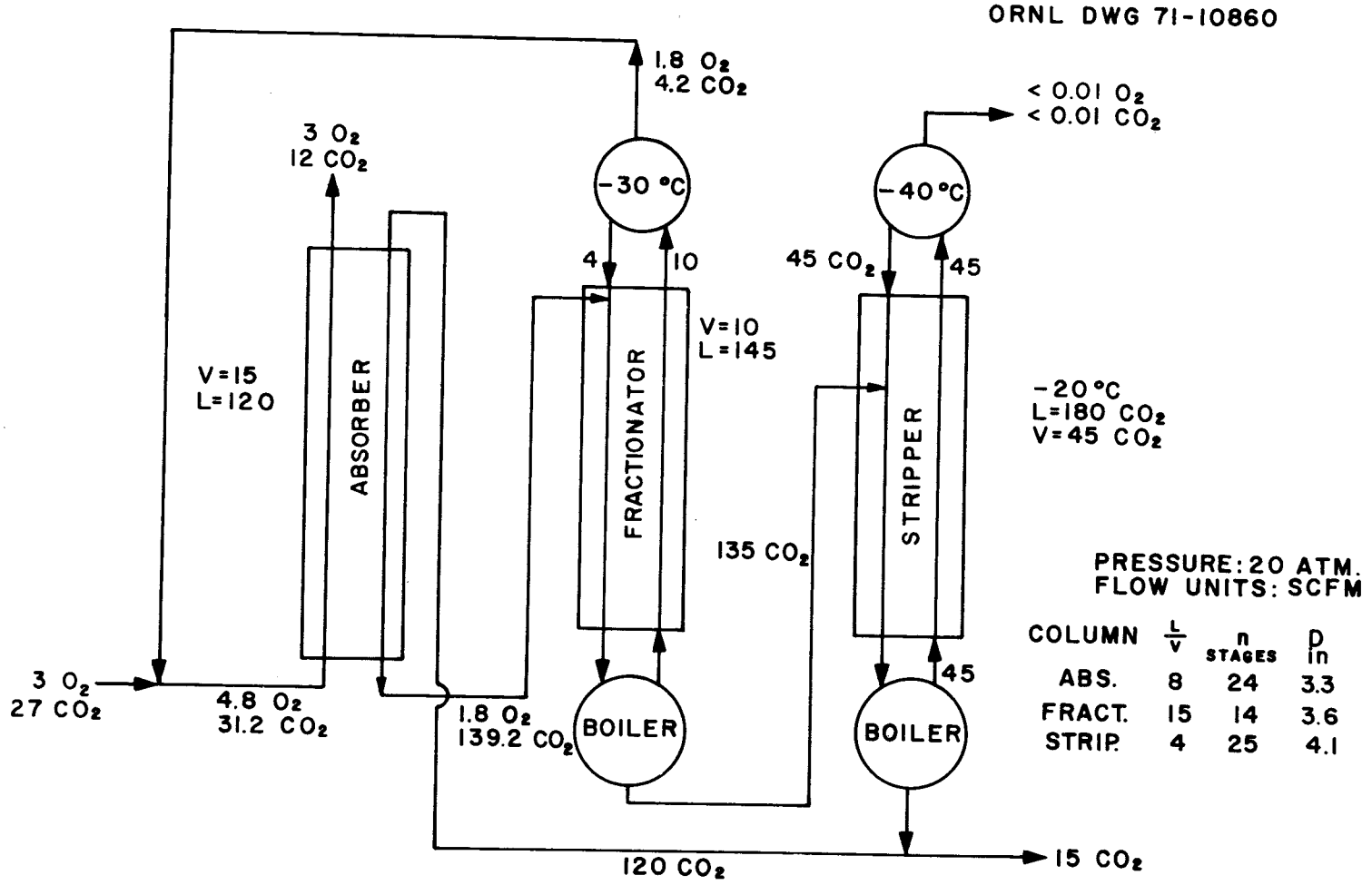


Fig. C-1. Process Model for KALC System Calculations.

The calculations are made in three stages. First, the system flow rates are estimated in such a manner that they are consistent with the separation requirements discussed. Then the number of stages required for the critical separations are estimated. Finally, the approximate column sizes and heat loads are estimated. All calculations are for 20-atm pressures; in an actual system, the columns might be operated with small pressure differences to give liquid flows without the use of pumps.

Flow Rate Estimations. - As a first approximation, all liquid phases are mostly $CO_2$, and liquid/gas distribution coefficients can be estimated by Raoult's law. The exact values depend on the extrapolation of krypton and $O_2$ vapor pressures; the values used are:

$$K_{Kr} = \left(\frac{y}{x}\right)_{Kr} = 6,$$

$$K_{O_2} = \left(\frac{y}{x}\right)_{O_2} = 25.$$

From consideration of the separation requirements, liquid/gas flow ratios are selected to be:

L/V = 8 for absorber,

L/V = 15 for fractionator,

L/V = 4 for stripper.

The gas and liquid inlet temperatures to the absorber are set to give 20% $O_2$--80% $CO_2$ in the exit vapor (about -24°C at 20 atm). Then the phase flow rates are:

$$V = \frac{3.0}{0.20} = 15 \text{ scfm},$$

$$L = V\left(\frac{L}{V}\right) = 15\ (8) = 120 \text{ scfm}.$$

The $O_2$ concentration will pinch at the bottom of the absorber at a value given by $0.20/\left(1 - \frac{8}{25}\right) = 0.30$ mole fraction $O_2$, which corresponds to a temperature of -30°C. This means most of the feed is liquid.

For the fractionator, essentially all the $O_2$ leaves in the vapor and the vapor composition is set by the condenser temperature. Since

this gas returns to the bottom of the absorber, the condenser temperature is selected to give the same $O_2$ concentration (0.30 mole fraction). The flow rates for the two columns must be determined by overall material balances. Consistent values are shown in Fig. C-1, with the phase flow ratio for the fractionator given by:

$$\frac{L}{V} = 15 = \frac{141 + V}{V},$$

$$V = \frac{141}{14} = 10.$$

For the stripper, the phase flow ratio is calculated from:

$$\frac{L}{V} = 4 = \frac{135 + V}{V},$$

$$V = \frac{135}{3} = 45.$$

The flow rates shown in Fig. C-1 are derived from simple material balances obtained when the compositions are in agreement with the previously listed distribution coefficients. For operation of a real system, the vapor and liquid flow rates shown can be obtained by controlling the condenser temperatures, the boilup rates in the reboilers, and the temperatures of the two streams entering the absorber. This is, of course, only possible if the equipment sizes (number of column stages, reboiler capacities, and condenser capacities) are in agreement with the assumed compositions.

Estimation of the Number of Stages. - Simplified calculations can be made since the critical separations in each column are for low concentrations of one component and essentially constant compositions of the major constituents. The compositions of most stages of the fractionator and stripper are greater than 99% $CO_2$ while most of the stages of the absorber are at the pinch concentration of $O_2$ and $CO_2$ (30% $O_2$, 70% $CO_2$ in the vapor for the assumed conditions).

For the absorber, the krypton separation factor per stage is (1/K) (L/V) or about 1.33. For a decontamination factor of 1000, the number of stages required is given by:

$$(1.33)^n = 1000$$

$$n = 24 \text{ stages.}$$

For the fractionator, the $O_2$ separation factor per stage is (K)(V/L) = (25/15) or about 1.67. For a decontamination factor of 1000, the number of stages required is:

$(1.67)^n = 1000$

n = 14 stages.

Below the feed point of the stripper, the krypton separation factor per stage is K(V/L) = (6/4) = 1.5. For a decontamination factor of $10^4$, the number of stages required is:

$(1.5)^n = 10^4$

n = 23 stages.

Above the feed point, the separation factor per stage is (6/1) = 6. Thus, very large concentration factors are possible in a few stages; $6^5 = 8000$.

These results indicate that the separations required do not result in an unreasonable number of stages. The number of stages can be reduced by changing the L/V ratios, but there are limitations that are not apparent from the simplified calculations. In the absorber, increasing L increases the $O_2$ pinch concentration, which, in turn, increases the amount of $O_2$ carried to the fractionator and decreases $K_{Kr}$ in the absorber. Increasing V in the fractionator increases the recycle of krypton to the absorber, thus increasing the required absorber DF for krypton. Increasing V in the stripper increases the equipment size since the stripper has the largest vapor rate, and consequently the largest reboiler, column, and condenser.

Column Sizes. - All three columns have high L/V ratios as compared with those common for most distillation columns, and calculations of column capacity are somewhat uncertain. The generalized flooding correlations and a viscosity correction for the low viscosity of liquid $CO_2$ indicate $L \sim 15{,}000$ lb/hr·ft$^2$. Converting units for $CO_2$,

$L = 2000$ scfm/ft$^2$

For absorber, D = 3.3 in.

For fractionator, D = 3.6 in.

For stripper, D = 4.1 in.

Heat Fluxes. - The heat fluxes can be estimated from the flow rates using the heat of vaporization of $CO_2$.

$$\Delta H_v = \frac{(44)(130)}{(359)}(60) = 950 \frac{\text{Btu}}{\text{hr}\cdot\text{scfm}}$$

To condense about 80% of feed gas:

$$q = (0.80)(30)(950) = 23{,}000 \text{ Btu/hr.}$$

For the fractionator reboiler,

$$q = 9500 \text{ Btu/hr} = 3 \text{ kW.}$$

For the fractionator condenser,

$$q = 5700 \text{ Btu/hr.}$$

For the stripper reboiler or condenser,

$$q = 43{,}000 \text{ Btu/hr} = 13 \text{ kW.}$$

Application to Pilot Plant Tests. - These calculations can be easily applied to KALC pilot-plant operations in the pilot plant for Freon absorption of rare gases, which is located at the Oak Ridge Gaseous Diffusion Plant (ORGDP). In this pilot plant, all streams are recycled with no feed and effluent flows. Thus, all three gas streams leaving the tops of the three columns are combined to give the feed stream to the absorber, and all of the liquid $CO_2$ from the stripper is fed to the top of the absorber. The overall result is to reduce the amount of all liquid $CO_2$ flows, starting with the feed, by 15 scfm. The effects on other flows and the number of stages required are small.

From previous results with Freon absorption studies, the pilot plant at ORGDP probably does not have the 14 to 25 stages per column required by the assumptions indicated in Fig. C-1. Results of similar calculations, assuming conditions that would require a smaller number of stages, are shown in Fig. C-2. These assumptions correspond to about 99% recovery of krypton in the stripper effluent.

ORNL DWG 71-10859

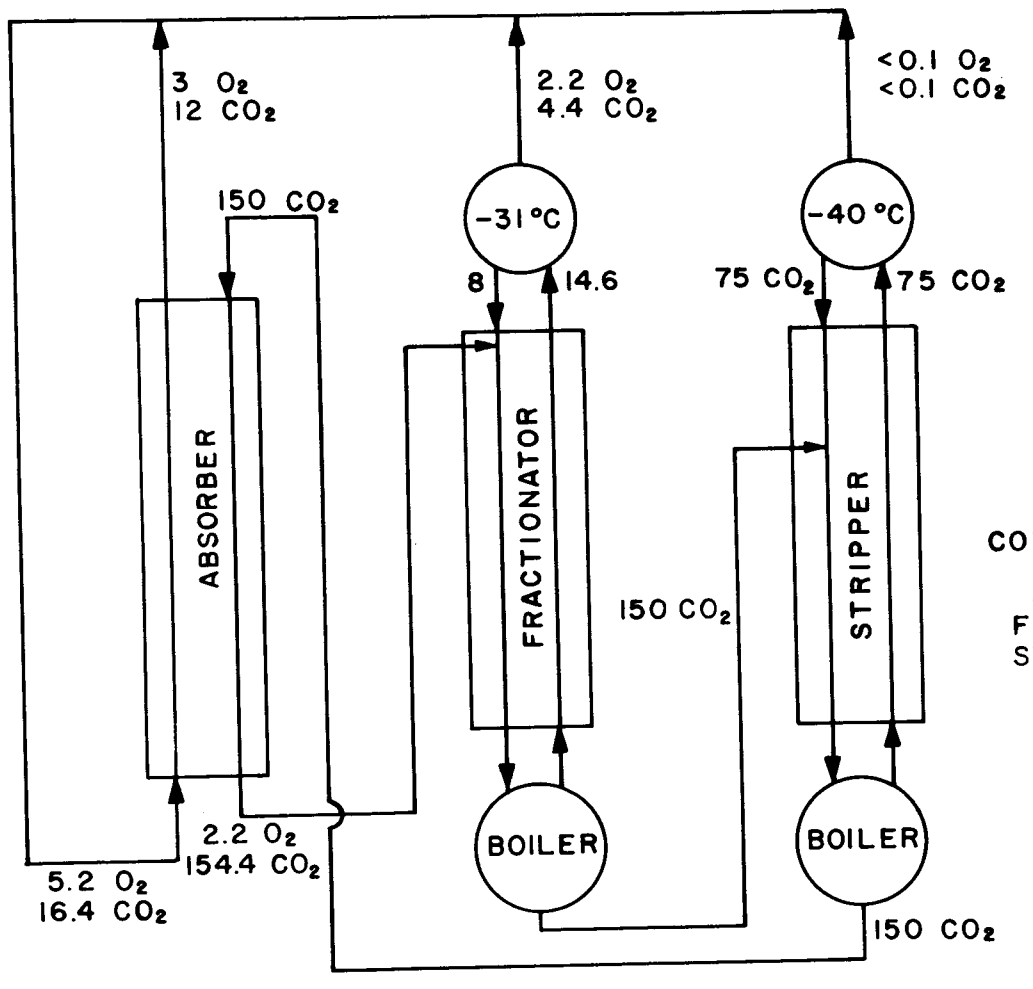


PRESSURE: 20 ATM.
FLOW UNITS: SCFM

| COLUMN | $\frac{L}{V}$ | n STAGES | D in |
|---|---|---|---|
| ABS | 10 | 9 | 3.7 |
| FRACT. | 12 | 13 | 3.9 |
| STRIP. | 3 | 13 | 4.6 |

Fig. C-2. Process Model for KALC System Operating at Total Recycle.

## 10. REFERENCES


1. Staffs of the Oak Ridge National Laboratory and Gulf General Atomic, National HTGR Fuel Recycle Development Program Plan, ORNL-4702 (August 1971).

2. M. J. Bell, ORIGEN, the ORNL Isotope Generation and Depletion Code, ORNL-4628 (in preparation).

3. W. Browning, R. Adams, and R. Ackley, Removal of Fission Product Gases from Reactor Off-Gas Streams by Adsorption, ORNL-CF-55-6-47 (June 11, 1959).

4. R. Adams and W. Browning, Estimate of the Probability and the Consequences of Ignition of the HRT Charcoal Beds, ORNL-CF-58-6-6 (June 3, 1958).

5. T. Leland, Design of Charcoal Adsorbers of the HRT, ORNL-CF-55-9-12 (Sept. 6, 1955).

6. L. Weller, The Adsorption of Krypton and Xenon on Activated Carbon-A Bibliography, MLM-1092, Mound Laboratories, Miamisburg, Ohio (Aug. 24, 1959).

7. D. Heymann, "The Separation of Xenon and Deuterium by Thermal Diffusion," A/Conf. 15/P/1124, Second Intern. Conf. on the Peaceful Uses of Atomic Energy, Geneva, 1958.

8. R. Perry (Ed.), Perry's Chemical Engineers Handbook, 4th ed., McGraw-Hill, New York, 1963.

9. D. Gibbs, H. Svec, and R. Harrington, "Purification of the Rare Gases," Ind. Eng. Chem. 48(2), 289-96 (1956).

10. R. Rainey, W. Carter, and S. Blumkin, Completion Report - Evaluation of the Use of Permselective Membranes in the Nuclear Industry for Removing Radioactive Xe and Kr from Various Off-Gas Streams, ORNL-4522 (April 1971).

11. K. Kammermeyer, "Silicone Rubber as a Selective Barrier," Ind. Eng. Chem. 49(10), 1685-86 (1957).

12. J. Mock, "Properties and Applications of the Rare Gas Clathrate Compounds," Trans. Am. Nucl. Soc. 3(2), 372-73 (1960).

13. J. Mock, J. Myers, and E. Trabant, "Crystallization of the Rare Gas Clathrates," Ind. Eng. Chem. 53(12), 1007-10 (1961).

14. V. Bhatnagar, Clathrate Compounds, S. Chand and Co., Delhi, India, 1968.

15. R. McElroy, E. Glueckay, H. deNordwall, and F. Pummery, "The Recovery of Radiokrypton from Dissolver Waste Gases by Fractional Extraction into Solvents," p. 309 in Vol. 18 of Second Intern. Conf. on the Peaceful Uses of Atomic Energy, Geneva, 1958.

16. M. Steinberg and B. Manowitz, An Absorption Process for the Recovery of Fission Product Noble Gases, BNL-493 (February 1958).

17. M. Steinberg and B. Manowitz, "Recovery of Fission Product Noble Gases," Ind. Eng. Chem. 51(1), 47-50 (1959).

18. M. Steinberg, B. Manowitz, and J. Pruzansky, The Recovery of Fission Product Xenon and Krypton by Absorption Processes, BNL-542 (January 1959).

19. R. Taylor and G. Wall, "Development of a Production Process for Radio-Krypton Recovery by Fractional Absorption," Prog. Nucl. Energy, Ser. IV 5, 307-46 (1963).

20. M. Stephenson, J. Merriman, and D. Dunthorn, Experimental Investigation of the Removal of Krypton and Xenon from Contaminated Gas Streams by Selective Absorption in Fluorocarbon Solvents: Phase I Completion Report, ORGDP-K-1780 (Aug. 17, 1970).

21. J. Hildebrand, J. Prausnitz, and R. Scott, Regular and Related Solutions, Reinhold, New York, 1970.

22. A. Kohl and F. Riesenfeld, Gas Purification, McGraw-Hill, New York, 1960.

23. R. Noyes, "Ammonia Gas Synthesis," Chemical Process Monograph No. 26, Noyes Development Co., 1967.

24. H. Benson, J. Field, and N. Haynes, "Improved Process for $CO_2$ Absorption Uses Hot Carbonate Solution," Chem. Engr. Progr. 52(10), 433-38 (1956).

25. H. Benson, J. Field, and R. Jimeson, "$CO_2$ Absorption Employing Hot Potassium Carbonate Solutions," Chem. Engr. Progr. 50(7), 356-64 (1954).

26. J. Tosh, J. Field, H. Benson, and W. Haynes, Equilibrium Study of the System Potassium Carbonate, Potassium Bicarbonate, Carbon Dioxide, and Water, U. S. Bureau of Mines Report 5484 (1959).

27. C. Bendixson, G. Offutt, and B. Wheeler, Rare Gas Recovery Facility at the Idaho Chemical Processing Plant, IN-1221 (April 1969).

28. E. Wilson and K. Taylor, The Separation and Purification of Krypton-85 at the Multi-Curie Level, AERE I/R 2693 (December 1958).

29. E. Quinn and C. Jones, Carbon Dioxide, Reinhold, New York, 1936.

30. J. Kuprianoff, Die Feste Kohlensaüre, Ferdinand Enke, Publisher, Stuttgart, Germany, 1953.

31. P. H. Emmett, Adviser to ORNL Chemical Technology Division, personal communication (February 1971).

32. J. Hoogendoorn, "A Comparison of Some Carbon Dioxide Removal Processes," Trans. Inst. Chem. Engrs (London) 41, 264-71 (1963).

33. G. Jenett, "Six Case Studies Throw Light on the Giammarco-Vetrocoke Process," Oil Gas J., NGPA Section, 72-77 (Apr. 30, 1962).

34. S. Katell and J. Paber, "New Costs for the Hot Carbonate Process," Petrol. Refiner 39(3), 187-90 (1960).

35. B. Buck and A. Leitch, "Try Gas Treating with Hot Carbonate," Petrol. Refiner 37(11), 241-46 (1958).

36. J. Mullowney, "Which $CO_2$ Removal Scheme is Best?" Petrol. Refiner 36(12), 149-52 (1957).

37. R. Palo and J. Armstrong, "How $CO_2$ Plants are Working," Petrol. Refiner 37(12), 123-28 (1958).

38. P. Danckwerts and M. Sharma, "Review Series No. 2, The Absorption of Carbon Dioxide into Solutions of Alkalis and Amines (with some notes on Hydrogen Sulphide and Carbonyl Sulphide Removal)," The Chemical Engineer, CE244-CG280 (October 1966).

39. R. Pohorecke, "The Absorption of $CO_2$ in Carbonate-Bicarbonate Buffer Solutions Containing Hypochlorite Catalyst on a Sieve Plate," Chem. Engr. Sci. 23, 1447-51 (1968).

40. P. Danckwerts and K. McNeil, "The Absorption of Carbon Dioxide into Aqueous Amine Solutions and the Effects of Catalysts," Trans. Inst. Chem. Engr. 45, T32-T49 (1967).

41. W. McCabe and J. Smith, Unit Operations of Chemical Engineering, McGraw-Hill, New York, 1956.

42. A. Eickmeyer, "Catalytic Removal of $CO_2$," Chem. Eng. Progr. 58(4), 89-91 (1962).

INTERNAL DISTRIBUTION

1. J. W. Anderson
2. C. D. Baumann
3. S. E. Beall
4. M. Bender
5. L. L. Bennett
6. C. E. Bettis
7. D. S. Billington
8. R. E. Blanco
9. W. D. Bond
10. H. I. Bowers
11. C. J. Borkowski
12. G. E. Boyd
13. R. J. Braatz
14. R. A. Bradley
15. R. B. Briggs
16. R. E. Brooksbank
17. K. B. Brown
18. W. E. Browning, Jr.
19. J. P. Callahan
20. S. Cantor
21. J. M. Chandler
22. C. F. Coleman
23. J. A. Conlin
24. J. H. Coobs
25. W. H. Cook
26. L. T. Corbin
27. J. M. Corum
28. W. B. Cottrell
29. C. M. Cox
30. J. A. Cox
31. F. L. Culler
32. C. W. Cunningham
33. J. E. Cunningham
34. F. C. Davis
35. H. G. Davis
36. H. J. de Nordwall
37. S. J. Ditto
38. W. P. Eatherly
39. D. E. Ferguson
40. B. C. Finney
41. R. B. Fitts
42. C. L. Fitzgerald
43. A. P. Fraas
44. J. H. Frye, Jr.
45. J. H. Gibbons
46-50. R. W. Glass
51. T. J. Golson
52. R. J. Gray
53. W. R. Grimes
54-58. P. A. Haas
59. R. L. Hamner
60. W. O. Harms
61. F. E. Harrington
62. C. C. Haws
63. D. M. Hewette
64. R. M. Hill
65. P. P. Holz
66. J. P. Jarvis
67. J. D. Jenkins
68. W. H. Jordan
69. S. I. Kaplan
70. P. R. Kasten
71. M. T. Kelley
72. C. R. Kennedy
73. F. G. Kitts
74. K. J. Notz
75. W. J. Lackey
76. J. M. Leitnaker
77. R. E. Leuze
78. T. B. Lindemer
79. M. H. Lloyd
80. E. L. Long, Jr.
81. A. W. Longest
82. A. L. Lotts
83. R. S. Lowrie
84. M. I. Lundin
85. R. E. MacPherson
86. J. P. McBride
87. R. W. McClung
88. W. T. McDuffee
89. D. L. McElroy
90. A. B. Meservey
91. B. H. Montgomery
92. J. P. Moore
93. M. T. Morgan
94. L. E. Morse
95. E. A. Nephew
96. J. P. Nichols
97. L. C. Oakes
98. A. R. Olsen

99. J. R. Parrott
100. W. A. Pate
101. P. Patriarca
102. W. L. Pattison
103. W. H. Pechin
104. A. M. Perry
105. C. B. Pollock
106. J. M. Robbins
107. M. W. Rosenthal
108. C. F. Sanders
109. J. P. Sanders
110. J. L. Scott
111. J. D. Sease
112. R. L. Senn
113. M. D. Silverman
114. O. Sisman
115. M. J. Skinner
116. J. W. Snider
117. O. K. Tallent
118. V. C. Tennery
119. R. E. Thoma
120. W. E. Thomas
121. R. L. Towns
122. D. B. Trauger
123. W. E. Unger
124. V. C. A. Vaughen
125. T. N. Washburn
126. A. M. Weinberg
127. J. R. Weir
128-132. M. E. Whatley
133. J. C. White
134. G. D. Whitman
135-139. R. G. Wymer
140-141. Central Research Library
142-143. Document Reference Section
144-146. Laboratory Records Department
147. Laboratory Records, ORNL RC
148-163. Laboratory Records, KFA Agreement
164. ORNL Patent Office

EXTERNAL DISTRIBUTION

165. L. H. Brooks, Gulf Energy & Environmental Systems, Inc., P. O. Box 608, San Diego, California 92112
166. D. F. Cope, RDT, ORNL Senior Site Representative, AEC
167. F. E. Dearing, RDT, ORNL Site Representative, AEC
168. N. Haberman, RDT, AEC, Washington 20545
169. Walter J. Haubach, Mail Station J-309, Division of Physical Research, AEC, Washington
170. R. Modrow, Allied Chemical Corporation, P. O. Box 2204, Idaho Falls, Idaho 83401
171. D. Peterman, Gulf Energy & Environmental Systems, Inc., P. O. Box 608, San Diego, California 92112
172. V. Pierce, Gulf Energy & Environmental Systems, Inc., P. O. Box 608, San Diego, California 92112
173. Art Roeh, Allied Chemical Corporation, P. O. Box 2204, Idaho Falls, Idaho 83401
174. J. A. Lenhard, AEC ORO
175. S. Strassberg, Gulf Energy & Environmental Systems, Inc., P. O. Box 608, San Diego, California 92112
176. Research and Technical Support Division, ORO
177-178. Technical Information Center, Oak Ridge