CENTRAL RESEARCH LIBRARY

ORNL-TM-3880

cy. 1

LOCKHEED MARTIN ENERGY RESEARCH LIBRARIES

3 4456 0514674 9

EFFECTS OF MAGNETIC FIELD ERRORS IN ORMAK

James A. Rome

OAK RIDGE NATIONAL LABORATORY
CENTRAL RESEARCH LIBRARY
DOCUMENT COLLECTION
LIBRARY LOAN COPY
DO NOT TRANSFER TO ANOTHER PERSON
If you wish someone else to see this document, send in name with document and the library will arrange a loan.
UCN-7969
(3 3-67)

OAK RIDGE NATIONAL LABORATORY
OPERATED BY UNION CARBIDE CORPORATION • FOR THE U.S. ATOMIC ENERGY COMMISSION

This report was prepared as an account of work sponsored by the United States Government. Neither the United States nor the United States Atomic Energy Commission, nor any of their employees, nor any of their contractors, subcontractors, or their employees, makes any warranty, express or implied, or assumes any legal liability or responsibility for the accuracy, completeness or usefulness of any information, apparatus, product or process disclosed, or represents that its use would not infringe privately owned rights.

ORNL-TM-3880

Contract No. W-7405-eng-26

THERMONUCLEAR DIVISION

EFFECTS OF MAGNETIC FIELD ERRORS IN ORMAK

James A. Rome

JUNE 1972

NOTICE This document contains information of a preliminary nature and was prepared primarily for internal use at the Oak Ridge National Laboratory. It is subject to revision or correction and therefore does not represent a final report.

OAK RIDGE NATIONAL LABORATORY
Oak Ridge, Tennessee 37830
operated by
UNION CARBIDE CORPORATION
for the
U.S. ATOMIC ENERGY COMMISSION

LOCKHEED MARTIN ENERGY RESEARCH LIBRARIES

3 4456 0514674 9

EFFECTS OF MAGNETIC FIELD ERRORS IN ORMAK

James A. Rome

ABSTRACT

The effect of errors in the magnetic field of ORMAK arising from the leads of the toroidal field coils is calculated. It is found that in the first few milliseconds of a discharge, these errors may open the flux surfaces if the heating current and toroidal field are parallel. This opening of flux surfaces may account for the observed elimination of runaway electrons in ORMAK. At later times in the discharge the effect of these field errors is negligible.

I. INTRODUCTION

In recent years much attention has been focused on the deliterious effects of magnetic field errors which can prevent the closure of lines of force in "closed-line" devices (such as multipoles) or spoil the symmetry of axisymmetric devices (such as TOKAMAKs). The closed-line devices are particularly sensitive to field errors unless a small "toroidal" component of magnetic field is introduced deliberately. Error fields of 1% of the main field increase plasma losses by an order of magnitude.(1) TOKAMAKs were found to be sensitive to field errors only for collisionless regimes of operation in the experiments reported by Stodiek, et al.(2) Here we wish to point out a different aspect of TOKAMAK operation in which field errors can play an important role,

namely at the beginning of the discharge when the rotational transform is still very small. In particular, field errors due to the toroidal field coils will have their greatest effect at this time since the plasma heating current is low. In ORMAK these errors can prevent the formation of runaway electrons (and the resulting x rays) by opening all of the magnetic flux surfaces at the beginning of the discharge.

When the liner in ORMAK has not been adequately discharge cleaned and baked, ORMAK operates in the runaway regime. In this regime the plasma is cold and highly resistive. The applied capacitor voltage causes a large toroidal electric field which exceeds the Dreicer field[3] and causes a portion of the electrons to accelerate, break away from the main distribution function, and "run away" to high energies. Almost all of the toroidal current is then carried by the runaway electrons.

However, in order to run away, the electrons must remain confined (on flux surfaces) long enough to accelerate to these high energies. In this report the hypothesis is that this process can be stopped by a magnetic field error which causes all of the flux surfaces to intercept the limiter at early times in the discharge when the toroidal voltage is high and the plasma density is low. If runaway electrons are prevented, the plasma carries the toroidal current which increases rapidly and closes the flux surfaces. The rapidly increasing density then requires a larger E field for runaway to occur and by the time the flux surfaces close, conditions for runaway are unfavorable. During the time when the flux surfaces intercept the limiter, the plasma ions will still be confined because of their greater inertia and resulting slower acceleration in the toroidal E field.

In the present ORMAK device the uncompensated current leads to each toroidal field coil are the primary source of field errors. The purpose of this paper is to calculate approximate flux surfaces in ORMAK in the presence of these errors and to show that the surfaces may indeed be opened at early times as a result of these errors. However, later in the discharge, the effect of these errors is negligible.

II. APPROACH TO THE PROBLEM

To simplify the analysis we neglect toroidal effects and consider a periodic cylinder (period $2\pi R_0$) with error coils distributed as shown in Fig. 1. Although these coils are actually distributed over the lower right-hand quadrant of the cylinder, we will assume that all of the rectangular current loops are located in the x-z plane. In ORMAK there are 56 such loops per $2\pi R_0$ of axial length.

To calculate flux surfaces we must assume some plasma current distribution, here taken to be uniformly distributed over the plasma cross section which is probably the case for a high resistivity plasma. Other distribution could be easily used, but in any event the distribution is not self consistent since the plasma current is assumed to be independent of the currents in the magnetic field coils.

We adopt the "method of averaging" as expounded by Morozov and Solov'ev[4] and by Bogoliubov and Mitropolsky[5] to obtain an approximate solution to the magnetic field line equations.

To proceed further we will assume that the field of the toroidal field coils, B_0, is purely z-directed and is much larger than any other magnetic field in the problem. The plasma current and the current in the

ORNL-DWG 72-4226

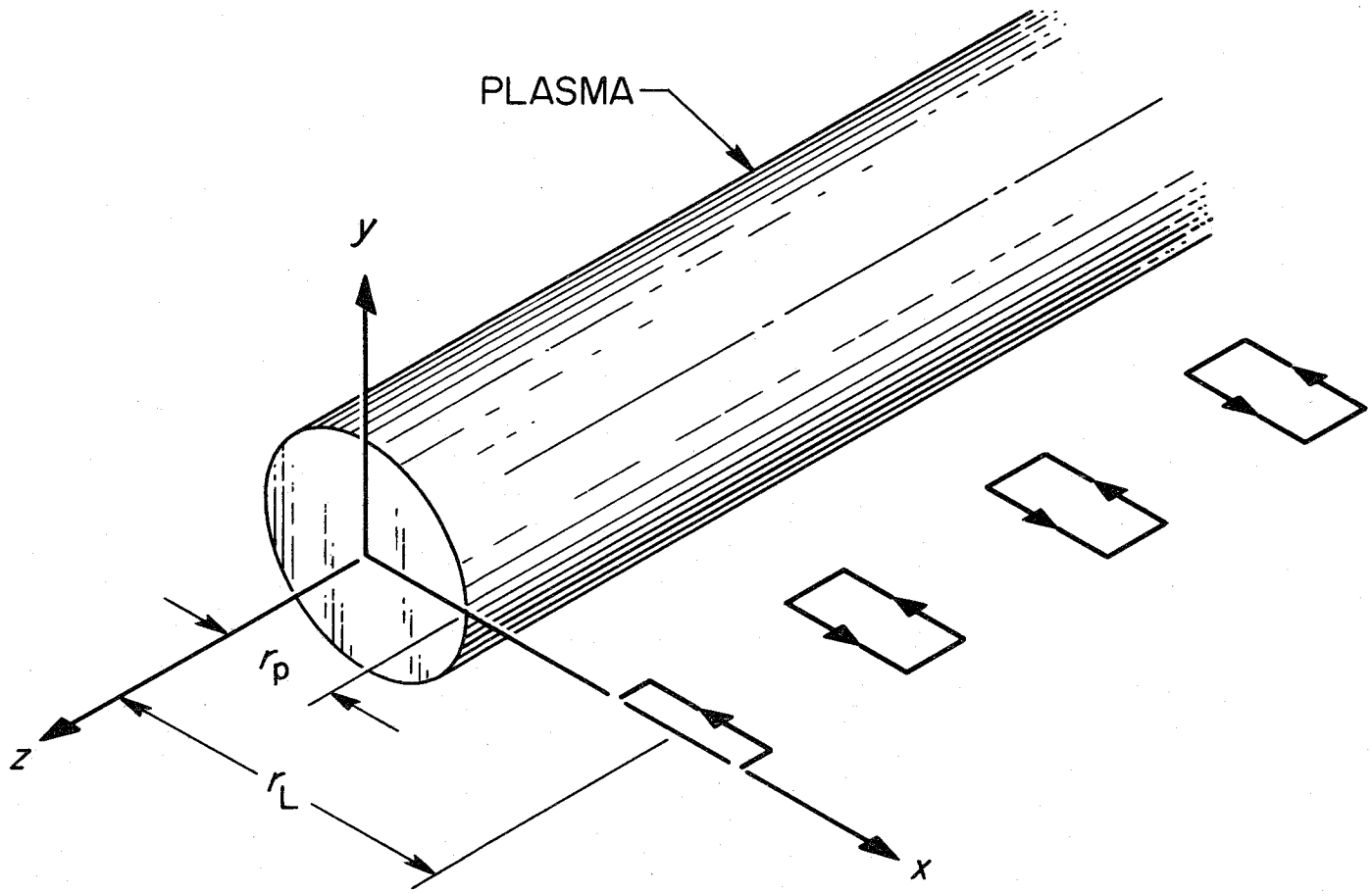

Figure 1. Geometry of the error coils in relation to the plasma.

error coils, taken together, have a magnetic field $\bar{b} = b_x\hat{i}_x + b_y\hat{i}_y + b_z\hat{i}_z$ that is periodic in z with a period of

$$L = \frac{2\pi R_0}{56} \tag{1}$$

since there are 56 error coils per period. In this analysis we will include the average part of b_z in with B_0 so that $\frac{1}{L}\int_0^L b_z(z)dz = 0$.

The equations for the magnetic field lines are given by

$$\frac{dx}{dz} = \frac{b_x}{B_0+b_z} \simeq \frac{b_x}{B_0} - \frac{b_x b_z}{B_0^2}$$

$$\frac{dy}{dz} = \frac{b_y}{B_0+b_z} \simeq \frac{b_y}{B_0} - \frac{b_y b_z}{B_0^2} \tag{2}$$

where the approximations are good so long as $B_0 \gg b_x, b_y, b_z$. Equation (2) is of the general form

$$\frac{dx_k}{dz} = f_k(x_i, z) \tag{3}$$

If f_k has a small, rapidly-varying part, we follow Morozov and Solov'ev and make the change of variables

$$x_k = \xi_k + \epsilon\hat{f}_k + O(\epsilon^2) \tag{4}$$

where ξ_k is a new variable which differs only slightly from x, but which does not have the rapid variation of x. Also,

$$\frac{d\xi_k}{dZ} = \bar{f}_k + \epsilon\,\overline{\frac{\partial f_k}{\partial \xi_i}\hat{f}_i} + O(\epsilon^2) \tag{5}$$

In these equations, ϵ is an ordering parameter and

$$\bar{f} = \frac{1}{L}\int_0^L f(z')dz' \tag{6}$$

$$\tilde{f}(z) = f(z) - \bar{f} \tag{7}$$

$$\hat{f}(z) = \widetilde{\int_0^z \tilde{f}(z')dz'} \tag{8}$$

For the present case we see that $\xi_k \simeq \bar{x}_k$, and $\epsilon = O(|\bar{b}|/B_0)$, so that

$$\frac{d\bar{x}_k}{dz} \simeq \bar{f}_k + \overline{\frac{\partial f_k}{\partial \bar{x}_i}\hat{f}_i} \tag{9}$$

Accordingly, the averaged version of Equation (2) is (to order ϵ)

$$\frac{d\bar{x}}{dz} = \frac{\bar{b}_x}{B_0} - \frac{\overline{b_x b_z}}{B_0^2} + \frac{\overline{\hat{b}_x \frac{\partial b_x}{\partial \bar{x}}}}{B_0^2} + \frac{\overline{\hat{b}_y \frac{\partial b_x}{\partial \bar{y}}}}{B_0^2}$$

$$\frac{d\bar{y}}{dz} = \frac{\bar{b}_y}{B_0} - \frac{\overline{b_y b_z}}{B_0^2} + \frac{\overline{\hat{b}_y \frac{\partial b_y}{\partial \bar{y}}}}{B_0^2} + \frac{\overline{\hat{b}_x \frac{\partial b_y}{\partial \bar{x}}}}{B_0^2} \tag{10}$$

We will only work with the first of these equations since they are identical upon interchange of x and y. Since $\nabla \cdot \bar{B} = 0$,

$$\frac{\partial b_x}{\partial x} = -\frac{\partial b_y}{\partial y} - \frac{\partial b_z}{\partial z} \tag{11}$$

Using the identities $\partial\hat{a}/\partial z = a$ and $\overline{a\hat{b}} + \overline{\hat{a}b} = 0$, it follows that

$$\frac{d\bar{x}}{dz} = \frac{\bar{b}_x}{B_0} - \frac{1}{B_0^2}\frac{\partial}{\partial \bar{y}}\left(\overline{\hat{b}_x b_y}\right) \tag{12}$$

Since the vector potential is related to $\bar{b}_x$ by

$$\bar{b}_x = \frac{\partial \bar{A}_z}{\partial \bar{y}} \quad , \tag{13}$$

we obtain

$$\frac{d\bar{x}}{dz} = \frac{1}{B_0} \frac{\partial}{\partial \bar{y}} \bar{A}_z - \frac{\overline{\hat{b}_x b_y}}{B_0} \tag{14}$$

and similarly,

$$\frac{d\bar{y}}{dz} = - \frac{1}{B_0} \frac{\partial}{\partial \bar{x}} \bar{A}_z - \frac{\overline{\hat{b}_x b_y}}{B_0} \tag{15}$$

The solution to Equations (14) and (15) is just

$$\psi(\bar{x},\bar{y}) = \bar{A}_z - \frac{\overline{\hat{b}_x b_y}}{B_0} = \text{constant} \tag{16}$$

This is the equation for the averaged flux surfaces. An even more accurate representation may be obtained by using Equation (4) to eliminate $\bar{x}$ and $\bar{y}$, but this will not be done here.

The error field can be obtained from the vector potential of a rectangular current loop by means of the formula

$$\bar{A} = \frac{\mu_0}{4\pi} I \oint \frac{\overline{ds}}{r} \tag{17}$$

which is easily derived from the Biot-Savart law. This integral can be carried out in terms of relatively simple functions for a rectangular current loop. The geometry of one such loop is shown in Fig. 2. Using Equation 17, we find that[6]

$$\bar{A} = \frac{\mu_0 I}{4\pi} \left\{ \hat{i}_z \left[\int_{-b}^{b} \frac{dz'}{r_1} - \int_{-b}^{b} \frac{dz'}{r_3} \right] + \hat{i}_x \left[\int_{-a}^{a} \frac{dx'}{r_2} - \int_{-a}^{a} \frac{dx'}{r_4} \right] \right\} \tag{18}$$

ORNL-DWG 72-4227

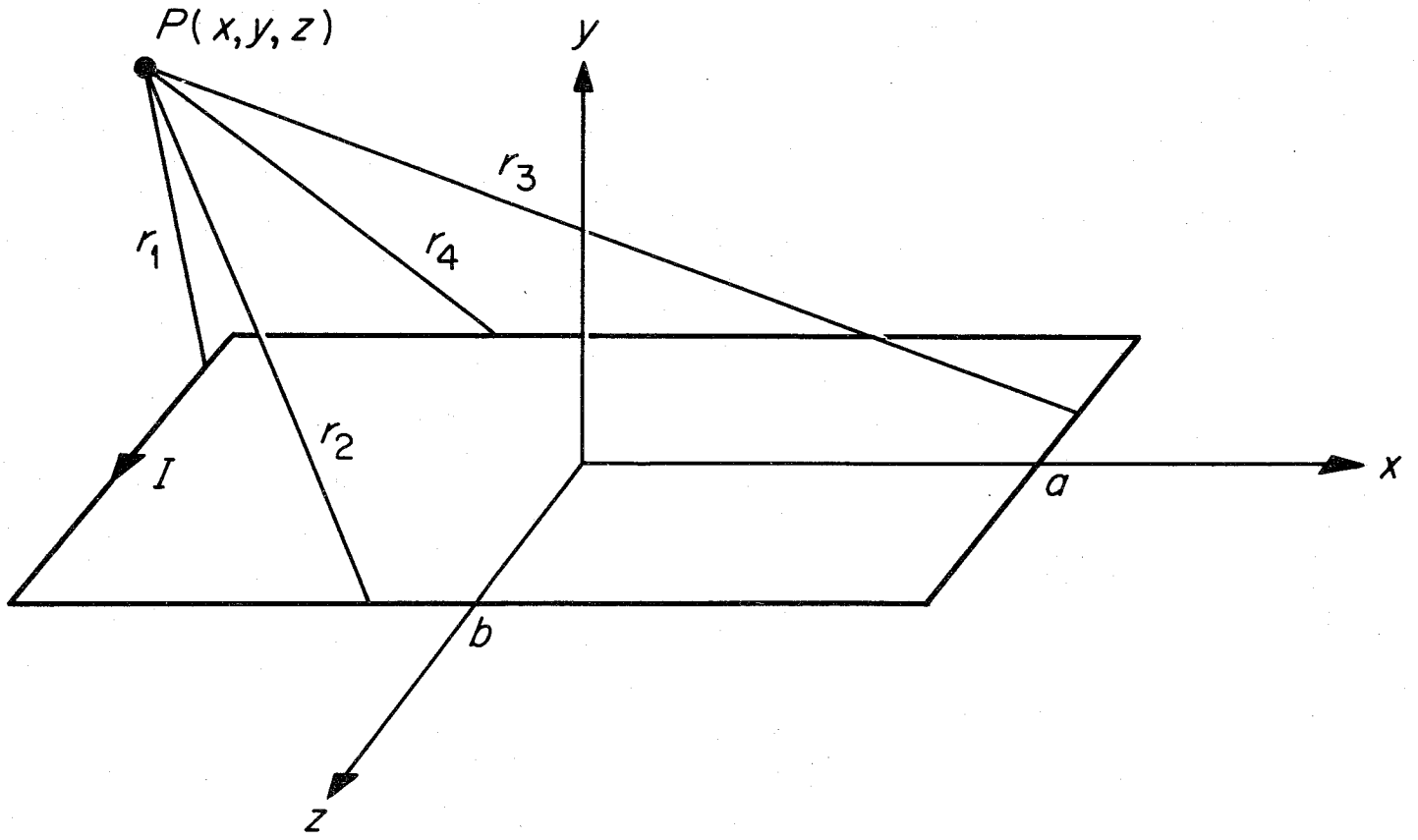

Figure 2. Geometry of a single error coil. The vector potential due to this coil is calculated at point P.

$$\overline{A} = \frac{\mu_0 I}{4\pi}\,\hat{i}_z \ln\left[\frac{z-b-\sqrt{(z-b)^2+(x+a)^2+y^2}}{z+b-\sqrt{(z+b)^2+(x+a)^2+y^2}}\cdot\frac{z+b-\sqrt{(z+b)^2+(x-a)^2+y^2}}{z-b-\sqrt{(z-b)^2+(x-a)^2+y^2}}\right]$$

$$+\frac{\mu_0 I}{4\pi}\,\hat{i}_x \ln\left[\frac{x-a-\sqrt{(x-a)^2+y^2+(z-b)^2}}{x+a-\sqrt{(x+a)^2+y^2+(z-b)^2}}\cdot\frac{x+a-\sqrt{(x+a)^2+y^2+(z+b)^2}}{x-a-\sqrt{(x-a)^2+y^2+(z+b)^2}}\right] \tag{19}$$

We now wish to examine the term $\overline{\hat{b}_x b_y}$ in Equation (16). It is at least $|\overline{b}|/B_0$ smaller than the $\overline{A}$ term. Furthermore, in the limit that the loops shrink to point dipoles, it can be shown that the averaging process yields zero since b_y is an even function of z and $\hat{b}_x$ is an odd function of z. For finite loops, this term is not identically zero, but will be small enough to neglect provided that the toroidal field, B_0, is large compared to $|\overline{b}|$. Thus, we shall assume that

$$\psi \simeq \overline{A}_z \quad . \tag{20}$$

III. CALCULATION OF THE AVERAGED FLUX SURFACES

We will make use of the following theorem to eliminate some infinite sums:

<u>Theorem:</u>

$$\sum_{m=-\infty}^{\infty}\frac{1}{L}\int_{-L/2}^{L/2} f(z-mL)\,dz = \frac{1}{L}\int_{-\infty}^{\infty} f(z)\,dz \tag{21}$$

<u>Proof:</u>

$$\sum_{m=-\infty}^{\infty}\frac{1}{L}\int_{-L/2}^{L/2} f(z-mL)\,dz = \sum_{m=-\infty}^{\infty}\frac{1}{L}\int_{-\infty}^{\infty} dx\int_{-L/2}^{L/2} dz\; f(x)\,\delta(x-z+mL)$$

$$= \frac{1}{L}\int_{-\infty}^{\infty} f(x)\left[\int_{-L/2}^{L/2}\sum_{m=-\infty}^{\infty}\delta(z-x-mL)\,dz\right]dx = \frac{1}{L}\int_{-\infty}^{\infty} f(x)\,dx$$

Furthermore, since $\int_{-\infty}^{\infty} f_{odd}(z)dz = 0$, we only need to integrate the even part of f(z) in Equation (21).

Since the z component of the vector potential which arises from the plasma heating current is not a function of z, we will not need to average it, and will include it later in the analysis. Because the rectangular current loops are spaced a distance L apart, A_z due to these loops is actually given by

$$A_z = \frac{\mu_0 I_L}{4\pi} \sum_{m=-\infty}^{\infty} \ln \frac{z-Lm-b - \sqrt{(z-Lm-b)^2+(x+a)^2+y^2}}{z-Lm+b - \sqrt{(z-Lm+b)^2+(x+a)^2+y^2}}$$

$$\cdot \frac{z-Lm+b - \sqrt{(z-Lm+b)^2+(x-a)^2+y^2}}{z-Lm-b - \sqrt{(z-Lm-b)^2+(x-a)^2+y^2}} \qquad (22)$$

Using Equation (21) we see that $\overline{A}_z$ is given by

$$\overline{A}_z = \int_{-L/2}^{L/2} \frac{\mu_0 I}{8\pi L} \ln \left\{ \frac{z+b + \sqrt{(z+b)^2+(x+a)^2+y^2}}{z+b - \sqrt{(z+b)^2+(x+a)^2+y^2}} \cdot \frac{z-b + \sqrt{(z-b)^2+(x-a)^2+y^2}}{z-b - \sqrt{(z-b)^2+(x-a)^2+y^2}} \right.$$

$$\left. \cdot \frac{z-b - \sqrt{(z-b)^2+(x+a)^2+y^2}}{z-b + \sqrt{(z-b)^2+(x+a)^2+y^2}} \cdot \frac{z+b - \sqrt{(z+b)^2+(x-a)^2+y^2}}{z+b + \sqrt{(z+b)^2+(x-a)^2+y^2}} \right\} dz \qquad (23)$$

Using the fact that

$$\int \ln \left[z \pm \sqrt{z^2+a^2} \right] dz = z \ln \left[z \pm \sqrt{z^2+a^2} \right] \mp \sqrt{z^2+a^2} \quad , \qquad (24)$$

and the limits as $z \to \infty$

$$\sqrt{(z \pm b)^2 + x^2} \to z \left[1 \pm \frac{b}{z} + \frac{x^2}{2z^2} \right] \qquad (25)$$

$$\ln\left[(z\pm b) + \sqrt{(z\pm b)^2 + x^2}\,\right] \rightarrow \ln(2z) \pm \frac{b}{z} \tag{26}$$

$$\ln\left[-(z\pm b) + \sqrt{(z\pm b)^2 + x^2}\,\right] \rightarrow \ln\left[\frac{b^2}{2z} + \frac{x^2}{2z}\right] \tag{27}$$

we find that

$$\bar{A}_z = \frac{N_L \mu_0 I_L b}{4\pi^2 R_0} \ln\left[\frac{(x-a)^2 + y^2}{(x+a)^2 + y^2}\right] \quad . \tag{28}$$

In the limit that $x^2 + y^2 \gg a^2$, this approaches the point dipole solution

$$\bar{A}_{z\ \mathrm{dipole}} = \frac{\mu_0 N_L I_L ab}{2\pi^2 R_0} \frac{x}{x^2+y^2} \quad . \tag{29}$$

To obtain the complete $\bar{A}_z$, we must shift the location of the loop centers to $x = r_L$, $y = 0$ and add the potential due to the heating current. Thus,

$$\boxed{\psi(\bar{x},\bar{y}) \simeq \frac{N_L \mu_0 I_L b}{4\pi^2 R_0} \ln\left[\frac{(x-r_L-a)^2 + y^2}{(x-r_L+a)^2 + y^2}\right] - \frac{\mu_0 I_P}{4\pi r_P^2}(x^2+y^2)} \tag{30}$$

Normalizing to the distance r_L, and using a different scale for ψ we obtain

$$\psi(X,Y) = \frac{N_L b r_P^2}{\pi R_0 r_L^2} \frac{I_L}{I_P} \ln\left[\frac{(X-1-A)^2 + Y^2}{(X-1+A)^2 + Y^2}\right] - (X^2+Y^2) \tag{31}$$

where $A = a/r_L$, $X = X/r_L$, etc. For ORMAK,

$N_L = 56$, $b = .015$ m , $a = .095$ m

$r_P = .23$ m , $r_L = .455$ m , $R_0 = .79$ m

so that

$$\frac{N_L b r_P^2}{\pi R_0 r_L^2} = .0865 = 2.62 \frac{b}{r_L} \quad .$$

Accordingly, it is seen that I_L must be much larger than I_P in order to obtain an appreciable effect. We can make this comparison more precise by solving for the point at which closed flux surfaces inside the plasma disappear. To find this point, we look for the separatrix which occurs on the X axis and is defined by $\partial\psi/\partial X = \partial\psi/\partial Y = 0$. Since at $Y = 0$, $\partial\psi/\partial Y$ is always zero by symmetry, we solve for $\partial\psi/\partial X$. If we define

$$E = \frac{N_L r_P^2 I_L}{\pi R_0 r_L I_P}$$

$$B = \frac{b}{r_L} \quad ,$$

we obtain

$$\frac{\partial\psi}{\partial X} = 0 = 2EBA \left[\frac{2[(x-1)^2 - A^2] - 2Y^2}{[(x-1-A)^2 + y^2]\,[(x-1+A)^2 + y^2]} \right] - 2X \qquad (32)$$

when $Y = 0$, this reduces to

$$X = \frac{2EBA}{(x-1)^2 - A^2} \qquad (33)$$

A graphical solution of this equation reveals that the separatrix occurs between $X = 0$ and $X = 1-A$ as shown in Fig. 3. We obtain a second condition by noting that when the separatrix just disappears, the slopes of the two sides of Equation (33) must be equal:

$$1 = \frac{-\,2EBA}{[(X-1)^2 - A^2]^2}\,[2(X-1)] \qquad (34)$$

ORNL-DWG 72-4228

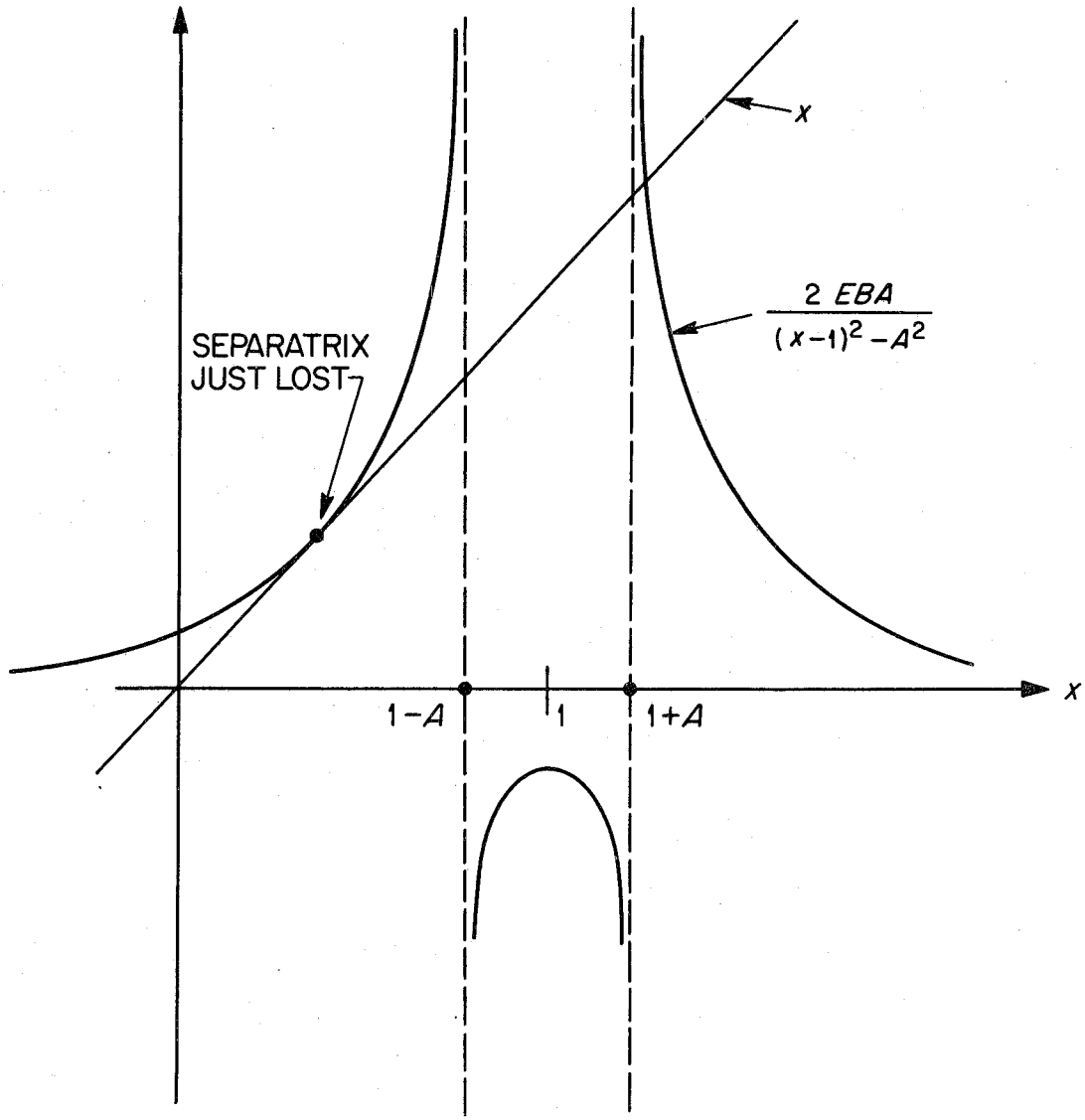

Figure 3. Graphical solution of Equation 33.

Solving Equations (33) and (34) simultaneously yields

$$X = \frac{2}{3} \pm \sqrt{\frac{4}{9} - \frac{1-A^2}{3}} \simeq .313 \tag{35}$$

$$E \simeq 10.25 \tag{36}$$

Therefore, using the definition of E, we find that there are no closed flux surfaces inside the plasma when

$$\frac{I_L}{I_P} > 3.91 \tag{37}$$

Since in normal operation in ORMAK, $I_L \ll I_P$, we see that under these conditions, the effect of the field errors on the shape of the flux surfaces is negligible. However, when ORMAK is operating in the runaway regime, a definite change is noted at short times when the sign of I_L/I_P is reversed. When $I_L/I_P < 0$, large fluxes of x rays are produced since the flux surfaces are always closed and the electron containment time is always long enough to allow runaway to occur. When I_L/I_P is positive, the flux surfaces are open for short times and no large x-ray fluxes are observed.

Computer plots of the averaged flux surfaces are presented in Fig. 4 for both signs of I_L/I_P. The opening of the surfaces is confirmed for $|E| > 10.25$ and $I_L/I_P > 0$. It is also seen that even if such catastrophic effects do not occur, the non-centering effect of the field errors on the flux surfaces will tend to raise the aspect ratio of the device.

ORNL-DWG 72-4229

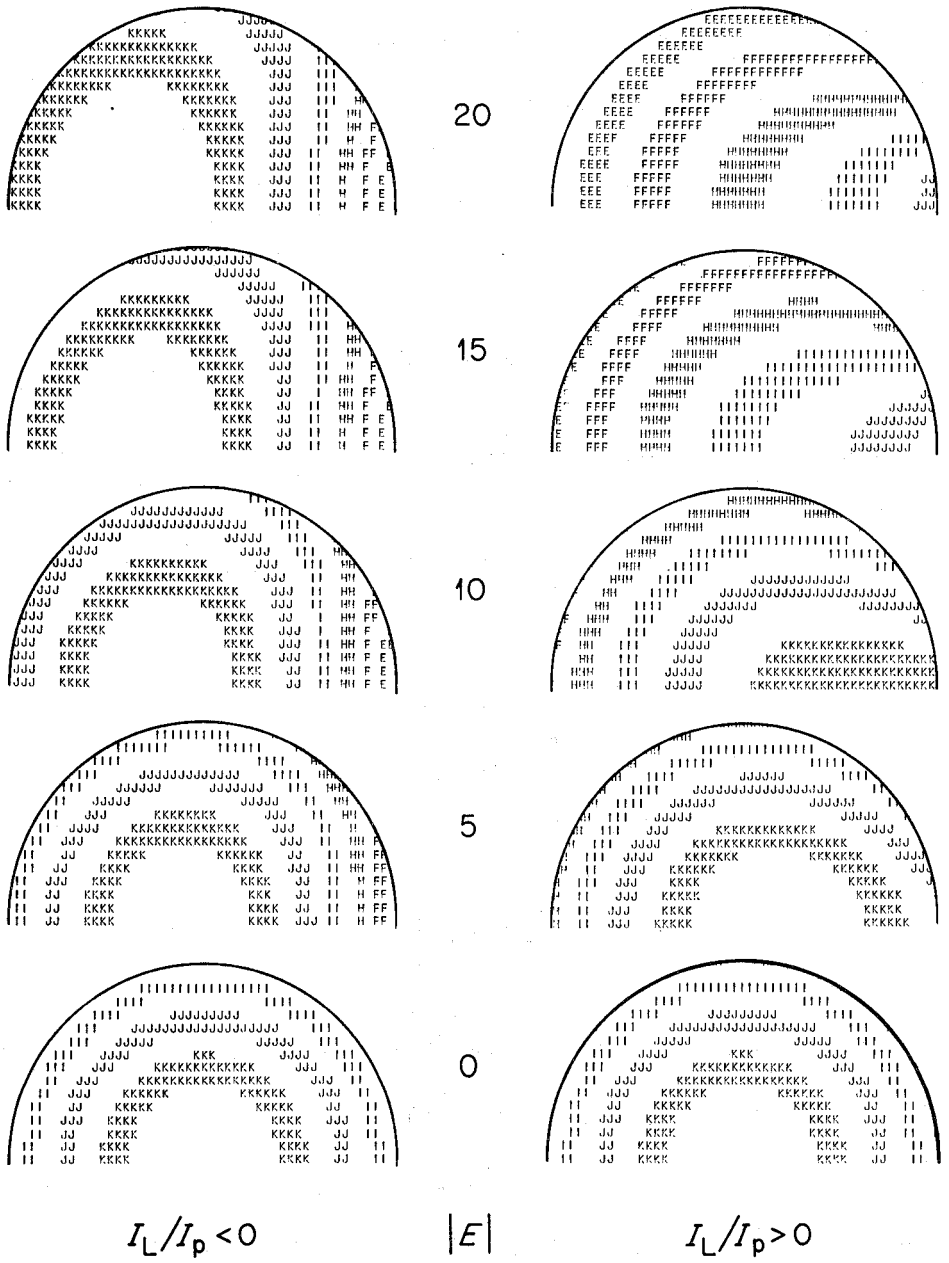

Figure 4. Average magnetic flux surfaces as a function of $|E| = (N_L r_P^2/\pi R_0 r_L)|I_L/I_P|$, for both signs of I_L/I_P. (The smoothed outlines of the lettered regions represent the magnetic flux surfaces.)

IV. EFFECT OF A VERTICAL MAGNETIC FIELD

Since we are using a cylindrical approximation, it is consistent to assume that the vertical field, B_Y, is constant.

$$B_Y = B_V = -\frac{\partial A_Z}{\partial X} \tag{38}$$

so that

$$\bar{A}_Z = -B_V X \tag{39}$$

With this addition, Equation (31) becomes

$$\psi = EB\,\ln\left[\frac{(X-1-A)^2 + Y^2}{(X-1+A)^2 + Y^2}\right] - X^2 - Y^2 - \frac{4B_V \pi r_P^2}{\mu_0 I_P r_L} X \tag{40}$$

If we define

$$F \equiv \frac{B_V \pi r_P^2}{\mu_0 I_P r_L} , \tag{41}$$

Equation (40) is equivalent to

$$\psi = EB\,\ln\left[\frac{(X-1-A)^2 + Y^2}{(X-1+A)^2 + Y^2}\right] - (X - 2F)^2 - Y^2 \tag{42}$$

which merely shifts the center of the plasma by -2F in the X-direction.

When the plasma current is very small, the shift is very large so that the effect of the vertical field is greatest at short times.

We can easily solve Equation (42) for the separatrix condition as it stands, but it is more transparent to solve Equation (42) in the dipole approximation, $X^2+Y^2 \gg A^2$. In this case,

$$\psi = -\frac{4EBA(X-1)}{(X-1)^2+Y^2} - (X+2F)^2 - Y^2 \tag{43}$$

and the separatrix disappears at

$$X = \frac{1}{3} - \frac{4}{3} F \tag{44}$$

$$E = \frac{1}{4BA} \left(\frac{2}{3}\right) [1 + 2F]^3 \quad . \tag{45}$$

For example, there will be no flux surfaces when E = 0 (no perturbation) when $F = -\frac{1}{2}$. For this condition, we require

$$B_V = -\frac{\mu_0 I_P r_L}{2\pi r_P^2} = -17.2 \times 10^{-7} \; I_P \text{ webers/m}^2$$

For a heating current of 10^5 amperes, the critical vertical field is 1720 gauss which is far higher than is used in practice.

However, it is apparent that the sign and the variation in time of the vertical magnetic field can be used to reduce or exacerbate the effect of the errors in the toroidal field coils.

V. CONCLUSIONS AND COMPARISON WITH EXPERIMENT

We see that if the direction of the plasma current is properly chosen, the magnetic field errors can open the flux surfaces at the beginning of the discharge until the density has time to build up to a point where the existing electric field is insufficient for runaway to occur.

Figures 5 and 6 show the experimental results for ORMAK operation in the runaway regime. There is essentially no vertical field at the beginning of the discharge. Figure 5 is for $I_L/I_P < 0$. It is seen that although the plasma is extinguished before 20 milliseconds, the current remains at a high level and is then completely carried by runaway electrons. The discharge is accompanied by a copious x-ray

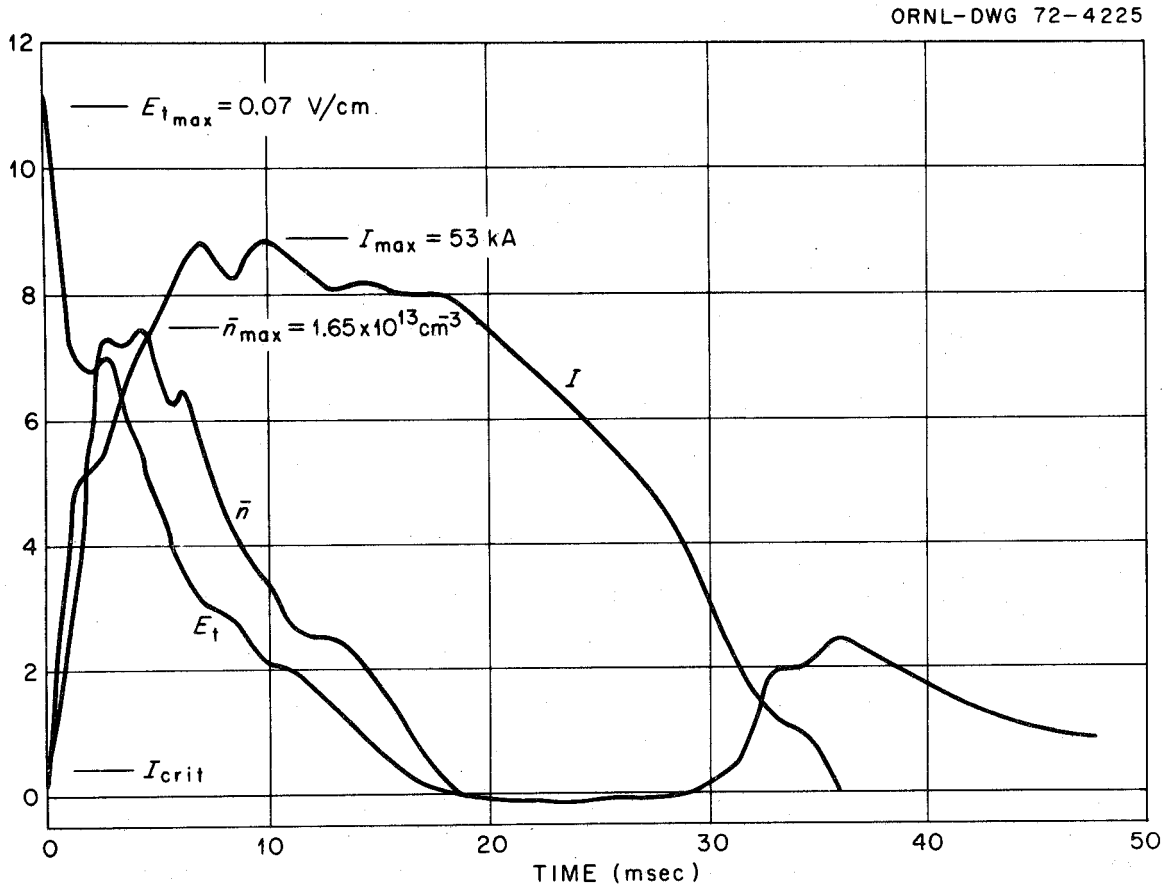

Figure 5. ORMAK plasma parameters in the runaway regime with $I_L/I_P < 0$. $\bar{n}$ is the average plasma density, E_t is the toroidal electric field, and I is the plasma current.

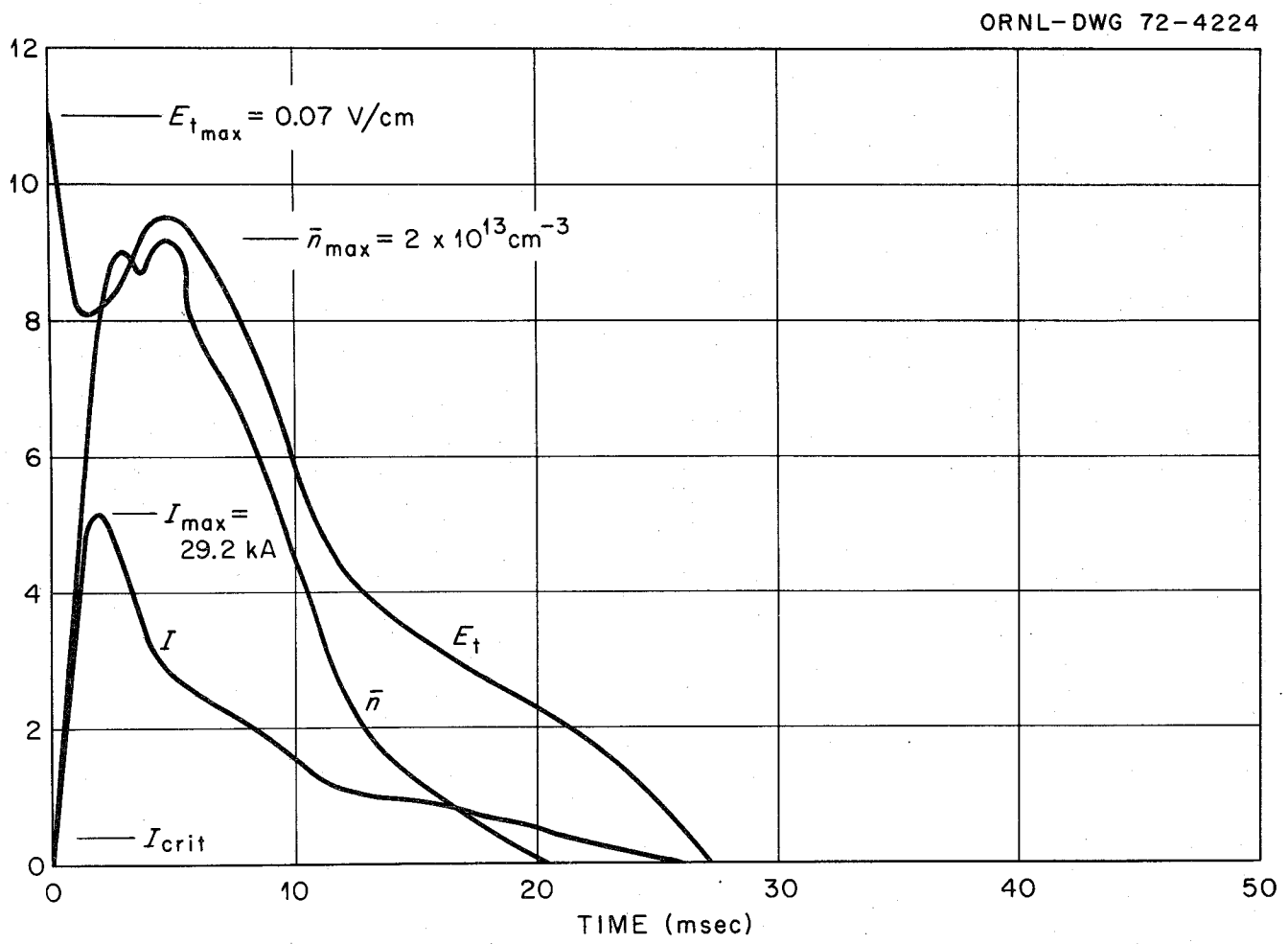

Figure 6. ORMAK plasma parameters when it is operating in the runaway regime but runaway does not occur since $I_L/I_P > 0$.

flux. On the other hand, when $I_L/I_P > 0$ and the flux surfaces are opened at early times in the discharge ($I < I_{crit}$), we obtain the results of Fig. 6. The x rays are eliminated and the plasma current decays away with the plasma density. Also, the vertical field was programmed and the quantitative x-ray behavior was consistent with the model presented in Section IV.

To see if there is numerical agreement between the experiment and theory, we refer to Dreicer's work[3] to see how long into the discharge conditions for runaway exist. If we assume that the plasma temperature is about 10 eV, and that the toroidal E field is about .07 V/cm, we see that this will be above the critical field only when the density is below 5×10^{11} cm^{-3}. Referring to the experimental data, we see that this density level occurs when the plasma current is about .5 I_{crit} so that holding the flux surfaces open until I_{crit} is reached will, in fact, eliminate the runaway electrons.

Thus, we see that numerical agreement between the theory and experiment is close enough to make the flux surface spoiling hypothesis tenable. Furthermore, we see that under normal operating conditions, $I_P \gg I_L$ and the effect of these field errors is negligible.

VI. ACKNOWLEDGEMENTS

The author wishes to thank J. F. Clarke, R. A. Dory and J. T. Hogan for their helpful discussions and suggestions. The experimental results shown in Figs. 5 and 6 were prepared by J. F. Clarke.

REFERENCES

1. T. Jernigan, J. Rudmin, and D. M. Meade, "Effect of a Toroidal Field on Plasma Transport in a Magnetically Perturbed Multipole," Phys. Rev. Letters 26, 1298 (May 24, 1971).
2. W. Stodiek, K. Bol, H. Eubank, S. Von Goeler, D. J. Grove, "Effect of Non-axisymmetric Confining Fields on Tokomak Discharges," in Plasma Physics and Controlled Nuclear Fusion Research (Proc. Fourth Int. Conf., Madison, 1971) 1, IAEA, Vienna, 465 (1971).
3. H. Dreicer, "Electron and Ion Runaway in a Fully Ionized Gas I," Physical Review 115, 238 (July 15, 1959).
4. A. I. Morozov and L. S. Solov'ev, "The Structure of Magnetic Fields," in Reviews of Plasma Physics, Vol. II," p. 22 and Appendix I, Consultants Bureau, New York (1966).
5. N. N. Bogoliubov and Y. A. Mitropolsky, Asymptotic Methods in the Theory of Non-linear Oscillations, Chapter 5, Gordon and Breach, New York (1961).
6. Ernst Weber, Electromagnetic Theory, p. 132, Dover Publications, Inc., New York (1965).