LOCKHEED MARTIN ENERGY RESEARCH LIBRARIES
3 4456 0514748 1

CENTRAL RESEARCH LIBRARY
DOCUMENT COLLECTION

OAK RIDGE NATIONAL LABORATORY
operated by
UNION CARBIDE CORPORATION • NUCLEAR DIVISION
for the
U. S. ATOMIC ENERGY COMMISSION

ORNL - TM - 3750

cy. 44

OAK RIDGE NATIONAL LABORATORY
CENTRAL RESEARCH LIBRARY
DOCUMENT COLLECTION
LIBRARY LOAN COPY
DO NOT TRANSFER TO ANOTHER PERSON
If you wish someone else to see this document, send in name with document and the library will arrange a loan.
UCN-7969
(3 3-67)

RADIOISOTOPE PROGRAM (8000) PROGRESS REPORT FOR FEBRUARY 1972

A. F. Rupp

[redacted]

NOTICE This document contains information of a preliminary nature and was prepared primarily for internal use at the Oak Ridge National Laboratory. It is subject to revision or correction and therefore does not represent a final report.

This report was prepared as an account of work sponsored by the United States Government. Neither the United States nor the United States Atomic Energy Commission, nor any of their employees, nor any of their contractors, subcontractors, or their employees, makes any warranty, express or implied, or assumes any legal liability or responsibility for the accuracy, completeness or usefulness of any information, apparatus, product or process disclosed, or represents that its use would not infringe privately owned rights.

ORNL-TM-3750

Contract No. W-7405-eng-26

ISOTOPES DEVELOPMENT CENTER

RADIOISOTOPE PROGRAM (8000) PROGRESS REPORT FOR FEBRUARY 1972

A. F. Rupp

Work Sponsored by
AEC Division of Applied Technology

MARCH 1972

OAK RIDGE NATIONAL LABORATORY
Oak Ridge, Tennessee 37830
operated by
UNION CARBIDE CORPORATION
for the
U.S. ATOMIC ENERGY COMMISSION

LOCKHEED MARTIN ENERGY RESEARCH LIBRARIES

3 4456 0514748 1

CONTENTS

Page

RADIOISOTOPE PRODUCTION AND MATERIALS DEVELOPMENT 1

REACTOR-PRODUCED ISOTOPES - 08-01-01 1

A. Biomedical Radioisotopes 1

1. Phosphorus-33 1
2. Potassium-43 1
3. Platinum-195m 3

B. Exploratory Development of Products and Techniques 4

1. Lanthanum-137 4

C. Reactor Products Pilot Production 5

ACCELERATOR-PRODUCED ISOTOPES - 08-01-02 6

A. Biomedical Radioisotopes 6

1. Gallium-67 6
2. Cesium-129 7

B. Accelerator Products Pilot Production 8

FISSION PRODUCTS - 08-01-03 9

A. Krypton-85 Enrichment 9

B. Cesium-137 Pilot Production 10

1. Processing and Process Status 10
2. Operational Summary 10
3. Current Orders 10
4. Source Fabrication 11

C. Strontium-90 Pilot Production 11

1. Processing and Process Status 11
2. Operational Summary 15
3. Current Orders 15
4. Source Fabrication 15
5. URIPS-8 Generators 16

D. Iodine-132 16

Page

E. Short-Lived Fission Products Pilot Production 18

F. Promethium-147 Source Fabrication, Powder Shipments, and Current Orders 18

SOURCE DEVELOPMENT - 08-01-04 18

A. Dose Rate Measurements with Extrapolation Chamber 18

B. Alpha Source Survey 20

C. Radioisotope Characterization, Quality Control, and Standards 21

1. Radioisotope Characterization 21

2. Radioisotope Special Analysis and Quality Control . . . 21

TECHNOLOGY UTILIZATION - 08-01-05 22

A. Information Center 22

B. Isotopes and Radiation Technology 22

RADIOISOTOPE SALES 22

ITEMS OF INTEREST 22

ADMINISTRATIVE 24

PUBLICATIONS 25

JOURNALS 25

REPORTS 25

TRANSLATION 25

RADIOISOTOPE PROGRAM (8000) PROGRESS REPORT FOR FEBRUARY 1972

A. F. Rupp

RADIOISOTOPE PRODUCTION AND MATERIALS DEVELOPMENT

REACTOR-PRODUCED ISOTOPES - 08-01-01

A. Biomedical Radioisotopes

1. Phosphorus-33

The purpose of this project is to develop methods of preparing hundred-millicurie quantities of carrier-free phosphorus-33 containing $\leq 5\%$ phosphorus-32. The two methods for producing phosphorus-33 being evaluated are based on the irradiation of highly enriched targets of sulfur-33 (>92 at. %) or chlorine-36 (approximately 63 at. %) in a fast neutron flux. Phosphorus-33 (25.2 days; 0.248-MeV β^-_{max}) has both a longer half-life and a lower energy beta than phosphorus-32 (14.3 days; 1.709-MeV β^-_{max}), which makes it advantageous for autoradiography, longer ecological and agricultural experiments than with phosphorus-32, synthesis of tagged complex organo-phosphorus compounds, and double labeling experiments.

A target containing 1.06 g $K^{36}Cl$ (69%) was removed after irradiation for five cycles in the HFIR. The target is being processed and is expected to yield approximately 1 Ci of phosphorus-33.

Additional work has been done to test the practicality of using an $Fe(OH)_3$ column instead of the $Fe(OH)_3$ precipitations now used. As the process is scaled up, the present glove box operation will become a manipulator operation. Our current experience does not show any particular advantage for the $Fe(OH)_3$ column. While it accomplishes the separation, it seems to require more time than the batch precipitations. Contrary to the batch precipitation process where the volumes are easily controlled, the volumes in the column process are usually larger due to the necessity of ensuring complete elution. The amount of iron employed is also much greater in the column, and, since acid dissolution is used to ensure good phosphorus-33 recovery, this iron must eventually be removed.

2. Potassium-43

The objectives of this project are: to prepare potassium-43 by the $^{43}Ca(n,p)^{43}K$ reaction, using isotopically enriched ^{43}CaO targets, in quantities sufficient for medical and biological experiments; to define a method for separating

potassium-43 from the target in a purity suitable for medical use; and to establish cooperative programs with medical institutions interested in evaluating its usefulness. Potassium-43, with a half-life of 22.5 hr and gamma-ray emissions of 0.373 and 0.617 MeV, is potentially useful for metabolic and clinical studies of blood flow, rejection of transplanted organs, and kidney function because the dose rate would permit multiple doses.

Two batches of potassium-43 were shipped. Recipients included University of Mississippi Medical Center, National Institutes of Health, Johns Hopkins Medical Institutes, University Hospitals of Cleveland, University of Texas Medical Center of Galveston, and V. A. Center, Wood, Wisconsin. The data for the runs are summarized in Tables 1 and 2.

Table 1. Yield of Potassium-43 from Calcium-43 Targets

	Target 465	Target 466
Weight ^{43}CaO (mg)	195[a]	199[a]
Irradiation time (hr)	66.0	66.0
Product delivery date	2/8/72	2/23/72
Total product at 8:00 AM on delivery date (mCi)		
Potassium-43	15.2	15.8
Potassium-42	1.9 (12.1%)	1.9 (11.9%)

[a]61% ^{43}Ca recovered 1/28/72 from targets 447 and 448.

Table 2. Radionuclides Found in Dissolver Sample by Gamma Scanning

Radionuclide	Half-Life	Activity at Discharge[a] (mCi)		Activity Concentration at Discharge (μCi/mg of target)	
		Target 465	Target 466	Target 465	Target 466
Potassium-43	22.5 h	33.2	35.6	170	180
Potassium-42	12.4 h	7.6	8.4	39	42
Sodium-24	15.0 h	5.7	4.4	29	22
Manganese-56	2.58 h	11.8	7.2	61	36
Strontium-87m	2.83 h	24.6	29.7	126	149
Calcium-47	4.53 d	0.37	0.45	1.9	2.2
Scandium-46	83.8 d	1.1	2.4	5.7	12
Scandium-47	3.38 d	0.31	0.35	1.6	1.8
Copper-64	12.7 h	4.3	2.8	22	14
Samarium-153	46.8 h	0.11	0.15	0.57	0.74
Zinc-69m	13.8 h	0.26	0.24	1.3	1.2
Gold-199	3.15 d	0.02	0.01	0.1	0.06
Chromium-51	27.8 d	0.05	0.03	0.3	0.1

[a]Total target.

A monitored irradiation of a potassium sample for five days in a flux of about 2.5×10^{15} n/cm^2.sec produced a $^{43}K/^{42}K$ activity ratio of 7×10^{-3}. The capture cross section of potassium-43 will be determined when the analysis of the monitors is complete.

3. Platinum-195m

The objectives of this work are to develop methods for preparing platinum isotopes suitable for whole-body scanning in biological and medical experiments, to characterize the products, and to establish cooperative programs with medical research groups interested in evaluating their usefulness.

Recent medical research has shown that certain platinum compounds act as chemical therapeutic agents towards certain tumors. There is need for platinum radioisotopes as tools for investigating the therapeutic mechanism involved. Platinum-195m (4.1 d) has gamma emissions of 99 keV (12%) and 129 keV (2.8%) that make it suitable for whole-body scanning.

Four irradiations of 57% enriched platinum-194 were made in a flux of approximately 2.5×10^{15} n/cm^2.sec. The platinum-195m was supplied in an aqua regia solution to cooperating researchers at University of Southern California and Michigan State University. The latter group synthesized both *cis*- and *trans*-dichlorodiamine Pt(II) compounds and administered them intraperitoneally to tumor-infected mice.

The irradiations identified several problems with the platinum-195m. The best available enrichment of platinum-194, the 57% target used, contains 8% platinum-196 and 0.4% platinum-198. Because of the larger capture cross sections of platinum-196 and platinum-198 the irradiated target contains much more platinum-197 (20 hr) and gold-199 (from $^{199}Pt \xrightarrow{\beta^-} {}^{199}Au$) activity than platinum-195m activity. The gold-199 can be completely removed by two extractions with methyl isobutyl ketone. The presence of platinum-197 introduces a complicating factor in correcting for decay in whole-body counting and necessitates the use of a silicon or germanium detector to assay both platinum-195m and platinum-197, which have photons too close to be resolved adequately with NaI. The results of a 10-day irradiation suggest that the activation cross section to produce platinum-195m may be an order of magnitude less than 0.09 barn quoted in BNL-325. Another possibility is that the platinum-195m may have a large burnup cross section. This is being tested by monitored irradiations of different durations.

Irradiation of an enriched platinum-194 target for six days in a flux of approximately 2.5×10^{15} n/cm^2.sec produced a product which is characterized in Table 3. The gold-199 has been removed by solvent extraction.

Neptunium-239, the decay product of uranium-239, is leached from the Supersil quartz ampul which has been found to contain a trace of natural uranium.

Table 3. Activity at Discharge in a Platinum Solution Containing 5 mg/ml

Isotope	Half-Life	Amount of Activity (mCi/ml)
Platinum-195m	4.1 d	4.2
Platinum-197	20.0 h	48
Platinum-191	2.71 d	0.004
Iridium-194	17.4 h	0.33
Iridium-192	74 d	0.001
Bromine-82	35.4 h	0.004
Neptunium-239	2.35 d	0.034

B. Exploratory Development of Products and Techniques

1. Lanthanum-137

Lanthanum-137 has a half-life of 6×10^4 years. It possesses an excited state at 0.010 MeV with an 89-nsec lifetime, which makes this nuclide suitable for the resonant absorption applications of the Mössbauer technique. The objective of this study is to determine the production parameters and separation procedures for making carrier-free lanthanum-137 available in significant quantities.

Two hundred sixty-eight micrograms of lanthanum-137 was produced from a target containing 40.2 mg of 22% enriched $^{136}CeO_2$ recovered from a previous two-cycle irradiation in the HFIR hydraulic tube. After a few months' decay the target was dissolved, and Ce(IV) was extracted with 0.5 *M* di(2-ethylhexyl)phosphoric acid in cyclohexane. The residual aqueous phase, containing lanthanum-137, cerium, and traces of other rare earths, was purified by high-pressure ion-exchange chromatography.

The final product was analyzed for gamma activities, and the lanthanum-137 was determined by double-stage mass spectrometry. A spark source mass analysis was also performed. The following relative mass abundances were found in the product:

Mass	Relative Atomic Abundance
136	0.003
137	100
138	3.676
139	1.336
140	0.034
141	0.037
142	0.004
143	0.001

It is a reasonable assumption that the 137-139 masses are lanthanum, while the others represent contaminants, including the possibility of natural barium in the filament used for the sample. A sample of lanthanum-137 solution was spiked with 20 vol % of a solution of known concentration of enriched (>99.99%) lanthanum-139 and was analyzed in a similar manner. From the measured ratio 0.4609 for 137/139 and the known concentration, 797 μg lanthanum-139 per ml in the spike solution, the concentration of lanthanum in the product solution was determined to be 76.7 μg/ml. The lanthanum-137 product gamma impurities determined on January 12, 1972, were:

Isotope	Amount (nCi/ml)
Europium-152	56
Iron-59	12
Cerium-141	5.7
Cerium-139	1.8
Cobalt-60	7
Gadolinium-153	2

The spark source mass spectrographic analysis provided the following mass concentrations for those elements detected:

Element	Amount (μg/ml)	Element	Amount (μg/ml)
Aluminum	0.5	Potassium	0.3
Boron	0.03	Sodium	<1
Barium	0.7	Nickel	<0.1
Calcium	3	Phosphorus	<0.3
Cobalt	<0.1	Silicon	10
Chromium	0.3	Zinc	<0.1
Copper	<0.1	Zirconium	0.5
Iron	2	Silicon	<0.1
Lanthanum-137	50		

The barium analysis above was based on the mass 138 concentration. The mass 138 probably denotes lanthanum rather than barium because of the absence of masses 134 and 135, which should be associated with barium. The relative abundances of masses 138 and 139 in the product will permit a tentative calculation of the lanthanum-137 capture cross section once the flux has been determined from the monitors.

The product was shipped to the Hebrew University of Israel under a cooperative program.

C. Reactor Products Pilot Production (Production and Inventory Accounts)

Processed Units		Service Irradiations	
Radioisotope	Amount (mCi)	Type	Number
Calcium-47	7	Platinum-194	1
Copper-67	63	Vanadium samples	1

ACCELERATOR-PRODUCED ISOTOPES - 08-01-02

A. Biomedical Radioisotopes

1. Gallium-67

The objectives of this program are to determine the optimal target configuration for gallium-67 (78.2 hr) production by the $^{68}Zn(p,2n)^{67}Ga$ reaction in acceptable purity and quantity and to provide gallium-67 for clinical applications research and development. Interest in this isotope has been spurred by evidence, obtained by the Medical Division of Oak Ridge Associated Universities (ORAU), of a high uptake of carrier-free gallium-67 by lymphoid tumors in both animals and humans.

Gallium-67 decays by electron capture with the emission of four main gamma rays of 93, 185, 300, and 394 keV with intensities of 42, 24, 17, and 5%, respectively.

Four weekly shipments of 100-mCi batches of gallium-67 citrate were supplied to ORAU as part of the Cooperative Group to Study Localization of Radiopharmaceuticals project, with minor fractions of each batch being packaged as the chloride and supplied to others. Three of these production runs were plagued by premature target failure of the extruded zinc tube target design in current use.

Development work has been continued on an electrodeposited zinc-on-copper target design. A series of experiments utilizing natural zinc targets and designed to investigate the effect of the average zinc plate thickness on the gallium-67 production rate for enriched zinc-68 targets (98.5 atom % zinc-68) has been completed, and the results are shown in Fig. 1. All targets were prepared from a chloride electrolyte system and irradiated in the ORNL 86-Inch Cyclotron at a 15° angle for 1 hr with 22-MeV protons at a current of 200 μA. The average zinc plate thickness was not measured directly, but was calculated by the weight of zinc deposited, the plate area, and the density of metallic zinc. The gallium-67 production rate was estimated from the observed production rates for the natural zinc targets, the ^{66}Ga:^{67}Ga activity ratios, and the isotopic compositions of natural zinc and the enriched zinc-68 material under study. The data indicate that a thick target production rate of approximately 1.4 Ci/mA-hr can be achieved with a zinc plate of about 8-mil thickness for the target geometry employed.

Additional work will be carried out using natural zinc to determine the failure point of the targets with 8 ± 1/2-mil-thick zinc plates by irradiating them at increasingly higher proton beam currents. A sulfate electrolyte system, which yielded very promising results in preliminary experiments earlier, will also be investigated as a possible alternative to the chloride system used to prepare the targets used to acquire the data plotted in Fig. 1.

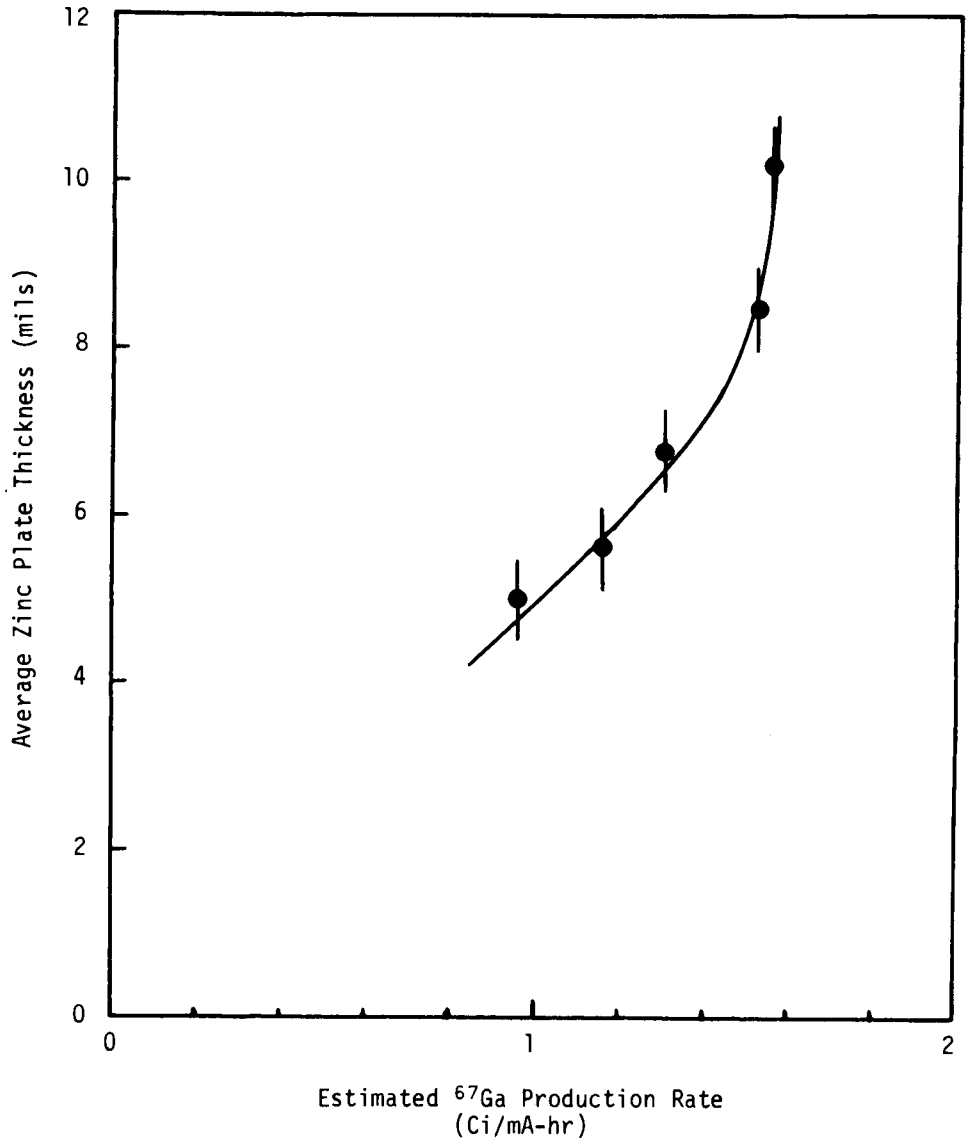

Fig. 1. Effect of Average Enriched Zinc-68 Plate Thickness on Gallium-67 Production Rate.

2. Cesium-129

The heavier alkali metals diffuse into the myocardium relatively rapidly and can be used for heart blood flow or myocardium infarction studies. Radioisotopes of potassium (potassium-43) and rubidium (rubidium-83 and rubidium-84) are currently under development at ORNL. Little has been done on the large-scale, economical production of a short-lived, low-dose radioisotope of cesium acceptable for nuclear medical diagnostic studies. Cesium-129 (32 hr) which decays solely by electron capture to stable xenon-129

with accompanying 372-keV (48%), 411-keV (25%), and 548-keV (5%) gamma-ray emissions would seem to offer an acceptable half-life for production and shipment, moderate energy photons that can be either scanned or imaged, and low patient dose. Radiocesium has also been reported to be useful for pancreatic and tumor imaging.

An enriched xenon-129 gas target for cesium-129 production was obtained by combining the light mass fractions of a special thermal diffusion run of natural xenon. This gas target was contained in a conventional aluminum beam stop type gas target holder, and a preliminary irradiation was performed in the ORNL 86-Inch Cyclotron at the extracted beam position for 2 hr. The cesium-129 was leached from the target holder with hot water after recovery of the xenon-129 target material. The radiocesium was separated from the leach solution by cation-exchange chromatography. The ion-exchange column was washed well with sterile, pyrogen-free water before elution of the cesium-129 product with dilute HCl (acid diluted with sterile pyrogen-free water). Both Vanderbilt University and Johns Hopkins University medical schools received about 15 mCi each for application and evaluation. The other one-third of the product was retained for characterization.

A thick target production rate of approximately 700 mCi/mA-hr was measured for this target geometry. The end-of-bombardment product composition was cesium-129 = 98.6% (exclusive of cesium-131), cesium-127 (6.2 hr) = 1.0%, cesium-132 (6.5 d) = 0.4%, and cesium-131 (9.7 d) <2% of the cesium-129 (estimated from initial target composition). Additional development work on this radionuclide will be performed during the next month.

B. Accelerator Products Pilot Production (Production and Inventory Accounts)

Table 4 gives the February 1972 accelerator runs for ORNL and non-ORNL programs.

Table 4. Accelerator Irradiations and Runs for February 1972

Product	No. of Runs	Time (hr:min) Beam	Misc.	Total	Total Charges
		ORNL Programs			
Gallium-67	6	17:10	6:55	24:05	$2,521
Indium-111	4	16:10	4:35	20:45	2,099
		33:20	11:30	44:50	$4,620
		Non-ORNL Programs			
Cobalt-57	1	50:00	1:15	51:15	$8,663

FISSION PRODUCTS - 08-01-03

A. Krypton-85 Enrichment

Operation of all units (see Fig. 2) was routine. A representative of Water Services, Inc., made a complete analysis of the cooling water used in the thermal diffusion system and found that the pH, chromate concentration, dissolved solids, and all other factors were within the desired limits, showing that our cooling tower water treatment system is operating very well.

Unit	Activity in Unit (Ci)	Time Since Last Product Removal (days)	Count Rate in Product Section (counts/min) Jan. 1972	Feb. 1972
A	264	220	5,250	4,600
AB	Xenon	30	—	—
B	264	220	6,850	7,450
C	1737	75	4,750	4,550
CD	2269	180	15,750	15,300
D	1615	75	4,750	4,650

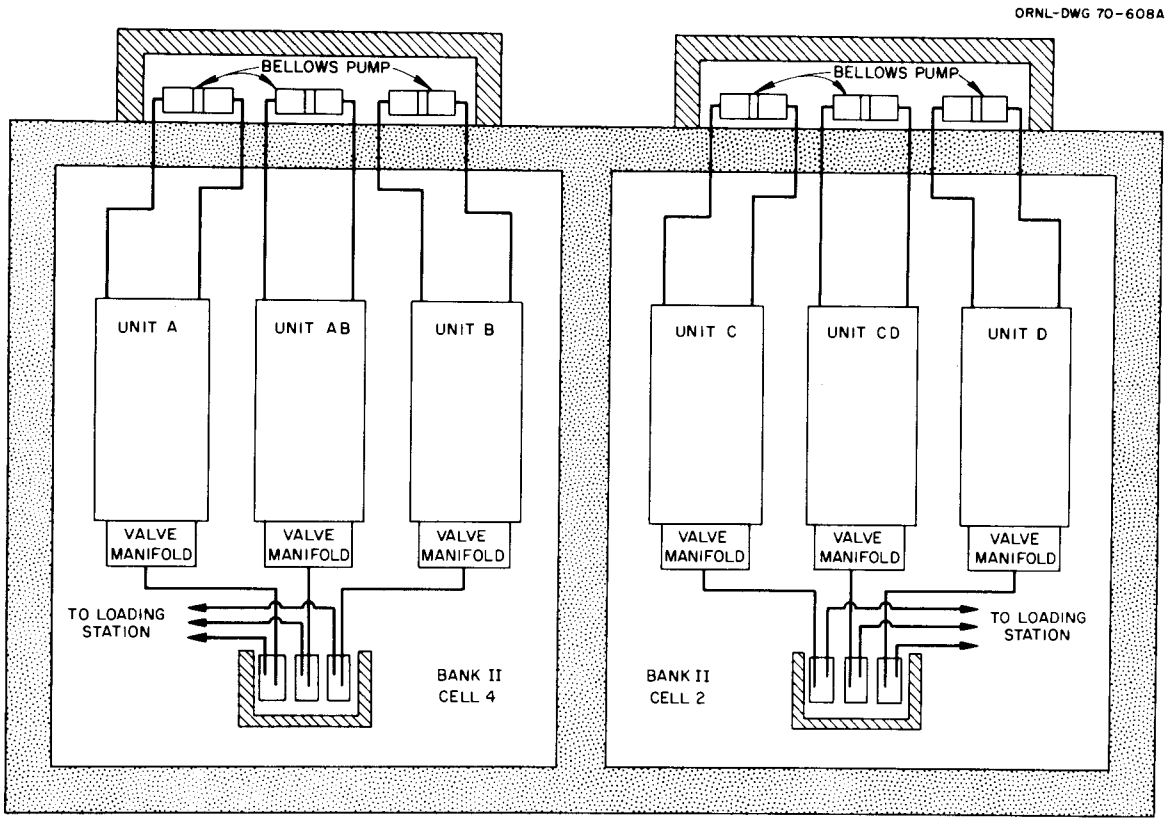

Fig. 2. Schematic Arrangement of Krypton-85 Columns.

B. Cesium-137 Pilot Production (Production and Inventory Accounts)

1. Processing and Process Status

No cesium-137 processing was done this month. All completed inventory $^{137}CsCl$ has been transferred from the FPDL to the Source Development Laboratory for packaging. The current cesium-137 process status is as follows:

Item	Cesium-137 (Ci)
In-process material	862,000
$^{137}CsCl$ products	115,400
Sources in fabrication	2,000
Completed sources awaiting shipment	70,900
Total	1,050,300

2. Operational Summary

Item	Feb. 1972		CY 1972		FY 1972	
	No.	(Ci)	No.	(Ci)	No.	(Ci)
HAPO shipments received	0	0	0	0	1	414,200
Product batches prepared	0	0	1	7,000	19	195,000
Sources:						
Fabricated	22	53,300	22	53,300	54	103,300
Shipped	22	53,300	22	53,300	38	71,900
Special form containers:						
Fabricated	2	300	2	300	15	900
Shipped	2	300	2	300	15	1,800

3. Current Orders

Current orders for cesium-137 as sources or bulk powder are shown below:

Customer	Amount (Ci)	Estimated Shipping Date
Brookhaven National Laboratory	203,000	FY 1972
Lockheed Georgia Company	∿35,000	a
Picker X-Ray Corporation	2,200	March 1972
Minnesota Mining and Mfg. Co.	500	March 1972
Total	240,700	

[a]Sources are in storage awaiting receipt of customer's container.

An order is on hand from Atomic Energy of Canada Limited for ∿105,000 Ci as bulk powder to be scheduled and shipped as released by customer.

4. Source Fabrication

The miscellaneous cesium-137 run begun in January is continuing. This run was interrupted at mid-month in order to fabricate four strontium-90 sources. The run has since been resumed.

The following cesium-137 orders were shipped during February.

Customer	No. of Sources	Type	Curies Per Source	Total Curies
Technical Operations	4	Modified radiographic	50	200
J. L. Shepherd	1	Modified radiographic	20	20
AECL	1	Tubular	14,785	14,785
AECL	1	Tubular	4,578	4,578
AECL	12	Teletherapy	1,800	21,600
AECL	2	Teletherapy	3,640	7,280
University of Texas	1	Tubular	4,816	4,816
Total	22			53,279

Cesium-137 powder shipments made during February are as follows:

Customer	No. of Cans	No. of Curies
International Chemical & Nuclear Corp.	1	39
Gamma Industries	1	250

C. Strontium-90 Pilot Production (Production and Inventory Accounts)

1. Processing and Process Status

a. Chemical Processing

The strontium-90 hot-press was replaced and processing was resumed. Test batches 3 and 4 made from the high-rare-earth strontium-90 feed were calcined to the distrontium titanate. The remainder of the rare-earth-contaminated strontium-90 feed was stored for later processing. Results of the four test batches run on this feed showed that the rare earths could be reduced to acceptable levels by precipitation with oxalate. This procedure was done under the following conditions.

1. The strontium-90 feed solution was adjusted to approximately the following conditions.

Strontium	20 g/liter
HNO_3	0.5-0.15 *M*
Rare earths	2 g/liter

2. Oxalic acid was added at a ratio of six moles of oxalate per mole of rare earths.

3. The mixture was digested, cooled, and filtered; the precipitate was washed with weak oxalic acid solution.

4. The filtrate was recycled to the precipitator and adjusted to pH ∿3 with ammonium hydroxide; then the strontium-90 was precipitated as the carbonate by the addition of ammonium carbonate and the system was filtered.

5. On the first three batches no TiO_2 was added during the precipitation of the $^{90}SrCO_3$. The $^{90}SrCO_3$ was assayed; then the calculated amount of TiO_2 was blended with the $^{90}SrCO_3$ and the blend was calcined. On the fourth batch the calculated TiO_2 was slurried with the $^{90}SrCO_3$ before filtration.

The rare-earth separation procedure described reduced the rare-earth-to-strontium ratio from 0.10 to 0.025 on the average, resulting in products comparable in rare-earth concentration to the "fresh" feed now available. Recovery of strontium-90 was quantitative within analytical tolerance. The combined rare-earth precipitates from the four batches were held for decay of the yttrium-90 and then were assayed calorimetrically; the amount of strontium-90 in them was insignificant.

Initial analyses of the strontium-90 received in December 1971 showed variable results on the samples from one of the two fractions. Repeated rechecks continued to give conflicting numbers. It is thought that this storage tank agitator is bad. The strontium-90 content in this fraction (245,000 Ci) was finally determined from the analyses of the six individual strontium-90 process runs described below; these represent the entire contents of that storage tank. Analysis of the other fraction of strontium-90 unloaded from the HAPO cask was normal and showed 415,500 Ci, for a total receipt of 660,500 Ci. The quoted loading for this cask was 630,000 Ci.

Six batches of strontium-90 fuel totaling 245,000 Ci were prepared from strontium-90 received from Hanford in December 1971. All of these were made by the dry-blend process in which the strontium-90 is precipitated as the carbonate. The precipitate is dried and assayed, and a calculated amount of TiO_2 is blended with the carbonate. The blend is calcined to form the distrontium titanate.

b. Pellet Fabrication

Four strontium-90 pellets were hot-pressed and used to fuel four sources for Gulf Energy and Environmental Systems. These 4.2-cm-diam pellets were made from strontium-90 fuel prepared during the oxalate test runs; they were pressed in a graphite die at 1375°C and 4,000 psi. The only problem encountered was during the ejection of the third pellet when the pellet stuck to the top die punch. This resulted in a rough top surface on the pellet. Significant pellet data are tabulated below.

	Pellet Number			
	1	2	3	4
Weight (g)	211.3	212.3	189.5	189.4
Power (W)	54.7	55.0	52.7	52.7
Activity (Ci)	8,040	8,090	7,750	7,750
Effective height (cm)	3.50	3.50	3.65	3.05
Effective density (g/cm^3)	4.4	4.4	3.8	4.5
Effective power density (W/cm^3)	1.13	1.14	1.05	1.25
TiO_2 mole ratio to theoretical Sr_2TiO_4	1.6	1.6	1.4	1.4

In the table above, the "effective" height and density values are based on the measurements made after the pellets had been loaded into their capsules and spacers had been added. Since the spacer position is defined by the highest point on the pellet, any nonuniformity of the top surface will reduce the effective density calculation relative to the actual physical density. This effect is quite significant in the case of pellet 3, which had a rough top surface. The actual densities of all of the pellets were similar, about 4.6 g/cm^3. The TiO_2 ratio is a calculated value based on elemental analysis of the $^{90}SrCO_3$ intermediate used in the fuel preparation; it is the ratio of the TiO_2 present to that required to form $M \cdot 0.5\ TiO_2$ where M represents the normal oxides of all detected oxide-forming elements. The two fuel batches used for these pellets were intermediate in composition between the $^{90}SrTiO_3$ and the $^{90}Sr_2TiO_4$ forms.

Two 10-cm-diam test pellets were hot-pressed, one from fuel prepared by the dry-blend procedure and one from fuel prepared by the slurry procedure. The two batches were similar in power concentration and elemental composition, and 279 W of fuel was used in each case. The calculated compositions of the Sr_2TiO_4 fuels are shown below.

	Pellet Number	
	SN-TP-2	SN-TP-3
Fuel process method	slurry	blend
Power concentration (W/g)	0.299	0.292
TiO_2 mole ratio to theoretical Sr_2TiO_4	1.09	1.17
Calculated composition (wt %)		
SrO	66.4	64.9
CaO	1.8	1.8
R_2O_3[a]	1.6	1.6
Other (as Fe_2O_3)	0.8	0.8
TiO_2 (by difference)	29.4	30.9

[a]Rare earths — 50% La, 30% Nd, 20% Pr.

Both pellets were pressed at 1375°C and 3,900 psi. Pressure was applied in a series of steps beginning with the die temperature at 1075°C, with full pressure being applied for one minute then released. This was repeated in 100°C increments to the final temperature of 1375°C, where the

pressure was held for 10 min. A moderate pressure (∿200 psi) was maintained during the cooling cycle until the die temperature was 900°C; then pressure was released and the die was allowed to cool to 300°C before the furnace was opened.

Mechanical problems occurred in both cases. During the ejection of SN-TP-2 the ejection sleeve tilted and considerable chipping occurred. However, the pellet was intact enough for measurement and density calculation. During the pressing of SN-TP-3 there was a pressure drop at the third incremental pressing point (1275°C), but the pressure returned quickly, and the system operated normally thereafter. However, when the furnace was opened it was found that the spun graphite sleeve had cracked about three-fourths of the way around. The die body was cracked but not shattered, and the punches were in place. After part of the spun graphite sleeve had been removed, the pellet was removed from the die. The pellet was intact except for some chips resulting from the removal operation, but it was not a right cylinder; the top surface sloped uniformly from a high point of 2.7 cm to a low of 1.7 cm. The density of pellet SN-TP-2 was 4.6 g/cm^3 (power density = 1.37 W/cm^3); the average density of pellet SN-TP-3 was also ∿4.6 g/cm^3, but the pellet would not be usable because of the sloped top surface.

The cause of the graphite sleeve breakage is not known; it is the first such breakage that has occurred during in-cell operations. The spun graphite sleeve had been used on seven previous pressings, four at 4,500 psi on a 4.2-cm-diam die and three at 3,900 psi on a 10.0-cm-diam die. Neglecting any support from the solid graphite die body (i.e., inner sleeve), the hoop tensile stress on the spun graphite in the worst case would be less than 10,000 psi. The design strength of this material is 15,000 psi with a safety factor of nearly 2:1 (quoted tensile strength 29,000 psi).

Chipping of the edges of large pellets such as SN-TP-2 is not a new problem. It arises from the fact that the solid die body walls are thin (∿0.2 in.) relative to the spun graphite sleeve walls. The ejection sleeve is a flanged device which must put uniform pressure on both of these members while providing clearance for the top punch and pellet to be ejected. Since alignment is made visually through the shielding window at an elevated location in the cell, it is a very difficult operation. On smaller pellets for which the die walls are relatively thick, the operation is much simpler.

In spite of the mechanical problems that occurred, useful information was obtained on both of these runs. The two pellet characteristics of most concern are the effective density and the pellet integrity. These two pressings demonstrated that with fuel of this chemical composition range (which is typical of available fresh strontium-90 feed), power densities in excess of 1.25 W/cm^3 should be achieved with the pressing conditions used. In both cases, the pellets remained intact without evidence of thermal cracking for several days. Pellet SN-TP-3 eventually cracked across the diameter.

In addition to obtaining general information on techniques for large strontium-90 pellet fabrication, these test pressings have the specific

goal of developing techniques for fueling a Sentinel-100 source. This source will require eight 10.0-cm-diam pellets with an average power density of 1.2 W/cm^3. The results of the test pressings made thus far are at least encouraging enough to indicate that the necessary pellets can be provided, but loading and handling of these units is still to be demonstrated.

c. Process Status

The current strontium-90 process status is shown below:

Item	Strontium-90 (Ci)
In-process material	1,210,000
Strontium-90 products	787,000
Sources in fabrication	0
Returned SNAP sources	341,000
Completed sources awaiting shipment	0
	2,338,000

2. Operational Summary

Item	Feb. 1972		CY 1972		FY 1972	
	No.	(Ci)	No.	(Ci)	No.	(Ci)
HAPO shipments received	0	0	0	0	1	660,500
Product batches prepared	6	245,000	7	285,000	10	401,000
Sources:						
Fabricated	4	31,600	4	31,600	5	81,200
Shipped	4	31,600	4	31,600	5	81,200
Special form containers:						
Fabricated	0	0	0	0	0	0
Shipped	0	0	1	500	2	600

3. Current Orders

Current orders for strontium-90 as sources or bulk powder are shown below:

Customer	Amount (Ci)	Estimated Shipping Date
U.S. Navy (Teledyne)	324,000	April 1972
U.S. Navy (ORNL)	208,000	April 1972
Lovelace Foundation	100	March 1972
Univ. of Calif., Berkeley	10	March 1972
	532,110	

4. Source Fabrication

Strontium-90 shipments during February are as follows:

Customer	No. of Sources	Type	Curies Per Source	Watts Per Source	Total Curies
Gulf Energy and Environmental Systems	4	Tubular	8,160	52	32,640

5. URIPS-8 Generators

The thermoelectric module/copper plug assembly is complete for all four generators. All procedures preliminary to in-cell loading of the source are complete.

Resistances of the generators were measured before and after assembly with the copper plug. These resistances are presented in Table 5. This information has been given to Mr. Robert H. Luten of the U.S. Naval Nuclear Power Unit for comparison with data obtained by the manufacturer.

D. Iodine-132

> Because the uptake of iodine by the thyroid gland reaches half of its maximum value in 6 hr — a period during which 80% of the administered iodine-132 would have decayed — iodine-132 has only a diagnostic value in nuclear medicine. Indeed because of the short half-life (2.28 hr), iodine-132 is often substituted for 8.05-day iodine-131 in diagnostic tests, thus reducing the radiation dose by a factor of 10 to 100.
>
> Despite the fact that iodine-132 has been known almost as long as nuclear fission has been known, it was not until Brookhaven National Laboratory made available large amounts of high-purity, high-specific activity iodine-132 through the utilization of a ^{132}Te-^{132}I generator system that its potential was realized and exploited. Work on the decay scheme since that time cleared up a number of uncertainties and established a decay scheme with 35 gamma rays placed.

At the time of our report[1] on the status of the properties, uses, and methods of the preparation of iodine-132, we had published work describing the decay scheme of iodine-132. Of the 116 transitions assigned to the decay scheme, 63 were placed in 20 levels. In addition the K-conversion coefficients and K-conversion coefficient electron intensities for 24 gamma transitions were measured. At that time[1] approximately 50 gamma rays that were definitely associated with the decay of iodine-132 remained unplaced. Moreover, as pointed out, additional study of the intensities of the high-energy gamma rays was required to resolve conflicts in the most recent published works from other laboratories.

---

[1]A. F. Rupp, *Radioisotope Program (8000) Progress Report for April 1970*, ORNL-TM-2993, Oak Ridge National Laboratory.

Table 5. Resistance Measurements on URIPS-8 Generators

Wire Pair[a]	Resistance (ohms)							
	No. 1 Initial	No. 1 After Assembly	No. 2 Initial	No. 2 After Assembly	No. 3 Initial	No. 3 After Assembly	No. 4 Initial	No. 4 After Assembly
AG	∞	b	18,000	—	∞	—	∞	—
GA	∞	—	18,000	—	∞	—	∞	—
ED	∞	—	18,000	—	∞	—	∞	—
DE	∞	—	18,000	—	∞	—	∞	—
AE	1.05	—	0.99	—	0.95	—	0.89	—
EA	0.80	—	0.91	—	0.81	—	0.85	—
AD	∞	—	18,000	—	∞	—	∞	—
DA	∞	—	17,500	—	∞	—	∞	—
DG	1.00	—	0.96	—		—	0.91	—
GD	0.75	—	0.90	—		—	0.84	—
GE	∞	—	17,000	—	∞	—	∞	—
EG	∞	—	17,500	—	∞	—	∞	—
A Ground	∞	—	40×10^6	—	∞	—	∞	—
D Ground	∞	—	60×10^6	—	∞	—	∞	—
E Ground	∞	—	60×10^6	—	∞	—	∞	—
G Ground	∞	—	60×10^6	—	∞	—	∞	—
B Ground	4.15	2.7	6.1	2.5	c	—	∞	∞
C Ground	1.75	1.15	2.58	1.02	c	—	∞	∞
CB	5.85	3.85	8.5	3.6	6.4	3.6	7.4	3.5
BC	5.85	3.87	8.5	3.6	6.4	3.6	7.4	3.5
J Ground	4.0	1.10	1.3×10^5	1.17×10^5	∞	∞	8×10^4	4×10^4
H Ground	1.70	2.70	1.3×10^5	1.17×10^5	∞	∞	8×10^4	4×10^4
HJ	5.70	3.70	8.45	3.7	6.5	4.4	7.3	3.5
JH	5.70	3.70	8.45	3.7	6.5	4.5	7.3	3.5
DE[d]	1.90	2.00	1.95	1.90	1.80	2.0	1.80	1.95
ED[d]	1.80	1.80	1.90	1.95	1.72	1.75	1.72	1.65
D Ground[d]	∞	∞	6×10^6	1×10^7	∞	∞	∞	∞
E Ground[d]	∞	∞	6×10^6	1×10^7	∞	∞	∞	∞

[a]In all cases first wire listed connected to (+) on meter and second wire to (-) on meter.
[b]Measurements not obtainable after assembly to copper block since wires A and G are tied together in continuous loop in the assembly procedure. This note applies to all readings marked with —.
[c]Measurements not obtained.
[d]Measurements taken with wires A and G tied together.

The present work, again in collaboration with Vanderbilt University, on iodine-132 was carried out with Ge(Li)-Ge(Li) detectors [the earlier work utilized NaI(Tl)-Ge(Li) detectors] and a two-parameter system with buffer tape storage. Gamma rays in coincidence with 30 transitions were analyzed. From the results of these coincidence measurements, 18 new levels are deduced in xenon-132.

The decay scheme of iodine-132 now includes 113 of the 119 definitely established gamma rays reported in this decay. Only five of these transitions are new; the approximately 50 previously known transitions have now been placed.

This work was presented at the Columbia, South Carolina, meeting of the American Physical Society in November 1971 and has been submitted to *Physical Review* for publication.

E. Short-Lived Fission Products Pilot Production (Production and Inventory Accounts)

Isotope	Number of Batches	Amount (Ci)
Xenon-133	3	1,200
Iodine-131	1	33
Zirconium-95	1	55

F. Promethium-147 Source Fabrication, Powder Shipments, and Current Orders

Atomic Energy of Canada Limited's order for 1,000 Ci of promethium-147 is expected to be shipped in March. Donald W. Douglas Laboratories' order for 101,000 Ci of promethium-147 will be made in two shipments. Fifty thousand curies will be shipped in July and the remaining 51,000 Ci will be shipped in November 1972.

SOURCE DEVELOPMENT - 08-01-04

A. Dose Rate Measurements with Extrapolation Chamber

The beta radiation measurement study was continued in which an additional beta source was fabricated and measured with the extrapolation chamber and thermoluminescent dosimeters. Liquid dosimeter measurements were not completed. This source was fabricated by incorporating thallium-204 nitrate in a polyvinyl acetate sheet (4 × 4 × 0.030 in.). A 2- by 2-in. square was measured on a 9- by 9-mm grid for uniformity using a 3-mm-diam collecting electrode in the extrapolation chamber. The maximum variation in the measurements (5.7%) occurred at the corners.

Dose rate measurements were made of the 2- by 2-in. square using the extrapolation chamber equipped with a 10-mm-diam collecting electrode. The results

of this and subsequent measurements made as the source was reduced to a 1-3/4-in.-diam disk and then in 1/4-in.-diam increments to a 1/2-in.-diam disk are shown in Table 6. Thermoluminescent dosimeters were placed on the centers of the 2- by 2-in. square source, the 1-1/4-in.-diam disk source, and the 1/2-in.-diam disk source. The results of these measurements are shown also in Table 6.

Table 6. Dose Rate and Source Size

Source Diameter (in.)	Dose Rate (rads/hr)		
	10-mm-diam Electrode	1-1/2-in.-diam Electrode	TLD
2 by 2 square	110.5		27.1
1-3/4	112.1		
1-1/2	107.8		
1-1/4	107.7		24.5
1	103.4		
3/4	100.5	112.6	
1/2	86.9	115.6	23.5
1/4		115.8	

Dose rate measurements were made of the 3/4-in.-diam disk, the 1/2-in.-diam disk, and the 1/4-in.-diam disk, using the extrapolation chamber equipped with a 1-1/2-in.-diam (38.1-mm) collecting electrode. These results are also shown in Table 6 and in Fig. 3, by the dotted line. The surface dose rate (110 rads/hr) as measured conventionally using the 10-mm-diam electrode (with the sensitive volume defined by the collecting electrode area) compares very favorably with 115 rads/hr measured with the large electrode in which the sensitive volume was defined by the source area.

The surface dose rate measured by the thermoluminescent dosimeters in the present experiment using thallium-204 is approximately 25% of the value measured by the extrapolation chamber. In previous experiments in which a strontium-90—yttrium-90 source was measured, an identical relationship (within the range of experimental error) existed between the values obtained with the two methods.

Present plans call for the fabrication of one additional source in which technetium-99 will be incorporated. Measurements of this source should complete this work, which has covered a wide span of beta particle energies.

The extrapolation chamber has been equipped with a specially designed electrode and vacuum system that can be used for measuring the number of beta particles being emitted from the source per unit time.

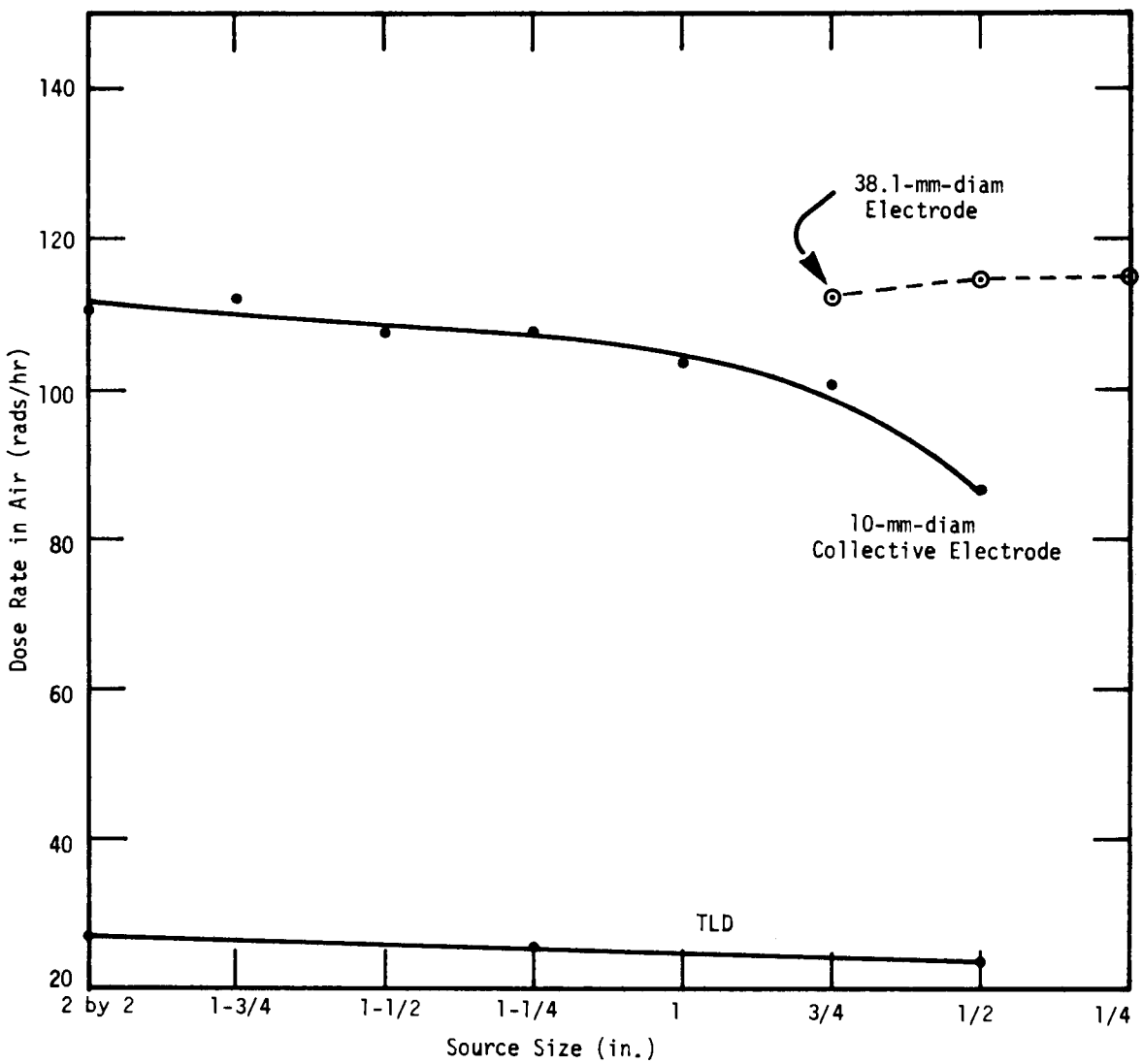

Fig. 3. Source Size Versus Dose Rate.

B. Alpha Source Survey

A survey of the literature on the use of alpha emitters as alpha sources, neutron sources (α,n), and alpha-excited x-ray sources is underway for the preparation of a review paper on this subject. Two primary information sources, the Isotopes Information Center's files and *Nuclear Science Abstracts*, should provide access to essentially all of the significant references. Almost 400 references on alpha sources have been retrieved from a computer search of the Information Center's files, and a search for neutron sources and x-ray sources using specific nuclides is in progress. The *Nuclear Science Abstracts* search is also well underway. A "RECON" computer search yielded 78 references on alpha sources and 65 on neutron sources (using certain specific nuclides). Some further searching using this system may be helpful. The RECON search covers only the years 1967

through 1971. A "RESPONSA" computer search of *Nuclear Science Abstracts* is also in progress and covers the years 1962 through 1971. A manual search of NSA is being made and will supplement the computer searches. The manual search from 1962 to the present is essentially complete. The ORNL Central Research Library will provide copies (from microfilm) of the requested abstracts. Searching of NSA prior to 1962 must be manual since no computer coverage is available.

C. Radioisotope Characterization, Quality Control, and Standards

1. Radioisotope Characterization

Information was provided to requesters on the decay schemes of ^{235}U, ^{115m}In, ^{116m}In, and Mn isotopes. A list of nuclides for which data are needed was drafted for the NRC standards subcommittee. When additions by others are completed, the final list will be forwarded to an advisory group for the AEC-NSF nuclear data project and will be a factor in setting priorities for work in that area.

In answer to a request from NBS a copy of an updated version of our table of specific activities[2] was forwarded. The specific activities of natural uranium isotopes were recalculated using latest values of half-lives and the result of a detailed consideration of the abundance of uranium-234. Experimental values[3] were averaged, discarding three outliers, to obtain 53.1 ± 0.5 ppm (by weight), significantly below 56 in the *Table of Isotopes*. When the value of 54 adopted by Hyde, Perlman, and Seaborg is used, the activity of uranium-234 in natural uranium is substantially equal to that of uranium-238, as it should be, since the two are in secular equilibrium. Therefore 54 ± 1 is recommended.

Requested reviews included the annual report on AEC Isotopes Development, a draft method of the American National Standards Institute (ANSI) for monitoring radioactivity in effluents, and an article for *Nuclear Technology*.

2. Radioisotope Special Analysis and Quality Control

Work is in progress to improve the performance of gamma ionization chambers in research and control laboratories, and to recalibrate them. Inquiries about radioactivity standards were answered for the Atomic Industrial Forum and others, emphasizing NBS as the supplier whenever possible. For gamma dose-rate calibration of small cesium sources, securing service from the Dosimetry Section of NBS was recommended. A submission on assay and purity of labeled compounds was reviewed for *Science*. Analytical and other uncertainties in cross sections were estimated for a neutron-bombardment product. It was found that high and erratic strontium-90 assays of certain samples were due to a trace of unidentified solids.

---

[2] G. Goldstein and S. A. Reynolds, *Nuclear Data* A1, 435-452 (1966).
[3] R. F. Smith and J. M. Jackson, *Variations in ^{234}U Concentration of Natural Uranium*, KY-581, 1969.

TECHNOLOGY UTILIZATON - 08-01-05

A. Information Center

It is hoped that *Special Sources (Rev.)*, *DID Publications*, *Teaching Experiments Using Radioisotopes*, and *Environments and Isotopes* can be completed before the IIC terminates operation on June 30, 1972.

B. Isotopes and Radiation Technology

Galley proofing of *Isotopes and Radiation Technology* 9(3) is nearly complete, and the final issue, 9(4), is being prepared in draft form.

RADIOISOTOPE SALES

ITEMS OF INTEREST

A request for quotation was received from Atomic Energy of Canada Limited for up to 80 cesium-137 sources containing 36,000 Ci. A request for quotation was received from J. L. Shepherd Associates for a 2000- to 4000-Ci cesium-137 source.

A target containing 1.32-μg/cm^2 samarium-151 evaporated onto a tantalum backing was shipped to McMasters University, Canada. Two decayed samples of xenon-133 gas were shipped to Argonne National Laboratory. A 10-μCi ruthenium-106 source was shipped to University of Alberta, Edmonton, Canada, to be utilized in a device for measuring egg-shell thickness by beta backscatter.

Shipments of special interest made during the month are listed below:

Customer	Isotope	Amount
Large Quantities		
Atomic Energy of Canada Limited	Cesium-137	48,245 Ci
University of Texas	Cesium-137	4,817 Ci
Gulf Energy and Environmental Systems	Strontium-90	31,630 Ci
New England Nuclear Corporation	Tritium	6,000 Ci
United States Radium	Tritium	10,000 Ci
Donald W. Douglas Laboratories	Promethium-147	50,000 Ci
Withdrawn Items		
Mayo Clinic	Copper-67	5 lots
University of Pittsburgh	Iodine-131, FP	50 mCi
Cleveland Metropolitan General Hospital	Iodine-131, FP	50 mCi
Oak Ridge National Laboratory	Carbon-14	200 mCi
Isotopes Shipped for Use in Cooperative Programs		
Oak Ridge Associated Universities	Gallium-67	
University of Southern California	Platinum-195m and Gold-199	
Vanderbilt University	Xenon-133	

A shipment of 50 liters of purified, fission-produced xenon gas was made to Union Carbide Corporation, Linde Division for Pacific Northwest Laboratory.

A summary of the radioisotopes shipped for January 1972 is given in Table 7.

Table 7. Summary of Radioisotopes Shipped During January 1972

Isotopes	No. of Shipments	Amount (mCi)
Calcium-47	8	6.5
Cerium-144	1	1,000.0
Cesium-137	6	19,818,000
Cobalt-60	2	65,000.0
Europium-152–154	1	6.0
Iodine-131	3	550.0
Krypton-85 (normal)	7	70,100
Krypton-85 (enriched)	1	2,000.0
Niobium-95	2	7.0
Phosphorus-33	4	202.0
Promethium-147	2	2,501,050
Ruthenium-103	1	2.0
Ruthenium-106	6	18.5
Strontium-89	4	27.5
Strontium-90	4	501,000
Tritium	13	24,350,000
Xenon-133	70	128,660.0
Yttrium-91	2	24.0
Zirconium-95	6	85.0
Samarium-151	1	5.0[a]
Service irradiations-cyclotron	3	
Service irradiations-reactor	4	
Experimental products	42	
Total	193	47,437,740.5 5.0[a]

[a]Milligrams.

The radioisotope sales proceeds and shipments for the first seven months of FY 1971 and FY 1972 are given in Table 8.

Table 8. Radioisotope Sales and Shipments

Item	7-1-70 thru 1-31-71	7-1-71 thru 1-31-72
Inventory items	$376,259	$259,622
Major products	75,220	37,957
Radioisotope services	196,179	162,035
Cyclotron irradiations	85,478	87,361
Miscellaneous processed materials	40,675	36,892
Packing and shipping	50,305	42,355
Total	$824,116	$626,222
Number of shipments	1,881	1,449

ADMINISTRATIVE

Visitors to the IDC and travel by IDC personnel are given in Tables 9 and 10.

Table 9. IDC Visitors

Visitors (affiliation)	Subject Discussed
Lakeway Chemicals, Inc.	Containment of noxious materials
University of Texas, Austin	Sewage treatment
Edward Mallinckrodt Institute of Radiology	Possible cooperative program

Table 10. Travel of IDC Personnel

Site Visited	Purpose of Visit
New York, New York	To discuss final report on Textile Chemists and Colorists dye study work with Textile Chemists Association
Westinghouse	To discuss curium-244 program

PUBLICATIONS

JOURNALS

L. C. Brown and A. L. Beets, "Cyclotron Production of Carrier-Free Indium-111," *Int. J. Appl. Rad. Isot.* 23, 57 (1972).

J. Konijn, A. C. Rester, B. van Nooijen, J. J. Pinajian, and N. R. Johnson, "The Radioactive Decay of ^{84}Y to Energy Levels in ^{84}Sr," Section 3.2.4 in *Instituut voor Kernphysisch Onderzoek Amsterdam, Progress Report 1970/71.*

A. C. Rester, B. van Nooijen, T. H. Delft, J. Konijn, P. Spilling, and J. J. Pinajian, "Inelastic Scattering of 13-MeV Protons and 18-MeV Alpha Particles from ^{84}Sr," Section 4.4.1 in *Instituut voor Kernphysisch Onderzoek Amsterdam, Progress Report 1970/71.*

J. H. Hamilton, P. E. Little, A. V. Ramayya, E. Collins, N. R. Johnson, and J. J. Pinajian, "M1 Admixtures of Transitions in ^{156}Gd, *Physical Review Abstracts* 3, 29 (1972).

REPORTS

E. Lamb, *Isotopic Power Fuels Monthly Status Report for January 1972*, ORNL-TM-3710, Oak Ridge National Laboratory.

A. F. Rupp, *Radioisotope Program (8000) Progress Report for January 1972*, ORNL-TM-3708, Oak Ridge National Laboratory.

J. H. Gillette, *Isotope Program (5000) Progress Report for Quarter Ending December 31, 1971*, ORNL-TM-3699, Oak Ridge National Laboratory.

TRANSLATION

K. Wagner, "Preparation of ^{206}Bi from Lead with Deuterons," *Kernenergie* 6, 122-3 (1963), ORNL-tr-2562, translated by J. J. Pinajian.

INTERNAL DISTRIBUTION

1. M. A. Baker
2. P. S. Baker
3. E. E. Beauchamp
4. G. E. Boyd
5-7. T. A. Butler
8. F. N. Case
9. W. R. Casto
10. J. A. Cox
11. F. L. Culler
12. W. C. Davis
13. J. S. Drury
14. J. H. Gillette
15. H. R. Gwinn
16. R. F. Hibbs
17. K. E. Jamison
18. Lynda Kern
19. E. H. Kobisk
20. E. Lamb
21. R. E. Leuze
22. J. L. Liverman
23. L. O. Love
24. W. S. Lyon
25. R. E. McHenry
26. H. H. Nichol
27. W. W. Parkinson
28. J. J. Pinajian
29. M. E. Ramsey
30. S. A. Reynolds
31-32. R. A. Robinson
33. D. A. Ross
34. A. F. Rupp
35. R. W. Schaich
36. A. H. Snell
37. K. A. Spainhour
38. M. R. Skidmore
39-40. H. F. Stringfield
41. D. B. Trauger
42. A. M. Weinberg
43. J. C. White
44-45. Central Research Library
46. Document Reference Section
47-51. Laboratory Records Department
52. Laboratory Records - RC

EXTERNAL DISTRIBUTION

53. G. A. Andrews, ORAU, Medical Division, Oak Ridge, Tennessee
54. Hal Atkins, Brookhaven National Laboratory, Upton, New York
55. D. S. Ballantine, AEC, Washington, D. C.
56-59. R. F. Barker, AEC, Washington, D. C.
60. N. F. Barr, AEC, Washington, D. C.
61. O. M. Bizzell, AEC, Washington, D. C.
62. C. R. Buchanan, AEC, Washington, D. C.
63. R. L. Butenhoff, AEC, Washington, D. C.
64. T. D. Chikalla, PNL, Richland, Washington
65. D. F. Cope, AEC Site Representative, ORNL
66. J. C. Dempsey, AEC, Washington, D. C.
67. W. K. Eister, AEC, Washington, D. C.
68. E. E. Fowler, AEC, Washington, D. C.
69. J. D. Goldstein, AEC, Washington, D. C.
70. A. Gottschalk, Argonne Cancer Research Hospital, Chicago, Illinois
71. F. D. Haines, AEC, Washington, D. C.
72-74. J. E. Hansen, PNL, Richland, Washington
75. W. D. Holloman, AEC, Washington, D. C.
76. J. W. Irvine, MIT (Consultant)
77. D. J. Jones, AEC, Richland, Washington
78. J. Lawrence, Lawrence Radiation Laboratory, Berkeley, California
79. J. E. Machurek, AEC, Washington, D. C.
80. J. N. Maddox, AEC, Washington, D. C.
81. J. C. Malaro, AEC, Washington, D. C.
82. W. E. Mott, AEC, Washington, D. C.

83. J. A. Powers, AEC, Washington, D. C.
84. G. J. Rotariu, AEC, Washington, D. C.
85. W. D. Sandberg, AEC, Aiken, South Carolina
86. R. W. Shivers, AEC, Washington, D. C.
87. F. J. Skozen (Krizek), Argonne Cancer Research Hospital, Chicago
88. P. E. Smith, ARHCO, Richland, Washington
89. L. G. Stang, Jr., BNL, New York
90-95. D. H. Turno, SRL, Aiken, South Carolina
96. A. R. Van Dyken, AEC, Washington, D. C.
97. Laboratory and University Division
98-99. Division of Technical Information Extension