LOCKHEED MARTIN ENERGY RESEARCH LIBRARIES

3 4456 0514867 6

ORNL-TM-3942

CENTRAL RESEARCH LIBRARY

Cy. 44

RADIOISOTOPE PROGRAM (8000) PROGRESS REPORT FOR JULY 1972

A. F. Rupp

[redacted]

OAK RIDGE NATIONAL LABORATORY
CENTRAL RESEARCH LIBRARY
DOCUMENT COLLECTION
LIBRARY LOAN COPY
DO NOT TRANSFER TO ANOTHER PERSON
If you wish someone else to see this document, send in name with document and the library will arrange a loan.
UCN-7969
(3 3-67)

OAK RIDGE NATIONAL LABORATORY
OPERATED BY UNION CARBIDE CORPORATION • FOR THE U.S. ATOMIC ENERGY COMMISSION

This report was prepared as an account of work sponsored by the United States Government. Neither the United States nor the United States Atomic Energy Commission, nor any of their employees, nor any of their contractors, subcontractors, or their employees, makes any warranty, express or implied, or assumes any legal liability or responsibility for the accuracy, completeness or usefulness of any information, apparatus, product or process disclosed, or represents that its use would not infringe privately owned rights.

ORNL-TM-3942

Contract No. W-7405-eng-26

ISOTOPES DEVELOPMENT CENTER

RADIOISOTOPE PROGRAM (8000) PROGRESS REPORT FOR JULY 1972

A. F. Rupp

Work Sponsored by
AEC Division of Applied Technology

SEPTEMBER 1972

NOTICE This document contains information of a preliminary nature and was prepared primarily for internal use at the Oak Ridge National Laboratory. It is subject to revision or correction and therefore does not represent a final report.

OAK RIDGE NATIONAL LABORATORY
Oak Ridge, Tennessee 37830
operated by
UNION CARBIDE CORPORATION
for the
U.S. ATOMIC ENERGY COMMISSION

LOCKHEED MARTIN ENERGY RESEARCH LIBRARIES

3 4456 0514867 6

CONTENTS

Page

RADIOISOTOPE PRODUCTION AND MATERIALS DEVELOPMENT 1

REACTOR-PRODUCED ISOTOPES 1

A. Biomedical Radioisotopes 1

1. Potassium-43 1
2. Platinum-195m 1
3. Gadolinium-152 2

B. Reactor Products Pilot Production 3

ACCELERATOR-PRODUCED ISOTOPES 3

A. Biomedical Radioisotopes 3

1. Gallium-67 3

B. Cyclotron Products Pilot Production 3

FISSION PRODUCTS 4

A. Krypton-85 Enrichment 4

B. Cesium-137 Pilot Production 4

1. Processing and Process Status 4
2. Operational Summary 5
3. Current Orders 5
4. Source Fabrication 5

C. Strontium-90 Pilot Production 5

1. Processing and Process Status 5
2. Operational Summary 6
3. Current Orders 6
4. URIPS-8 6

D. Short-Lived Fission Products Pilot Production 7

E. Promethium-147 Source Fabrication, Powder Shipments, and Current Orders 7

SOURCE DEVELOPMENT 7

A. Krypton-85 Foil Sources 7

B. Beta Radiation Development 8

Page

C. Radioisotope Characterization, Quality Control, and Standards 10

1. Radioisotope Characterization 10
2. Radioisotope Special Analysis and Quality Control . . . 11

RADIOISOTOPE SALES 11

ITEMS OF INTEREST 11

ADMINISTRATIVE 14

PUBLICATIONS 14

APPENDIX 15

RADIOISOTOPE PROGRAM (8000) PROGRESS REPORT FOR JULY 1972

A. F. Rupp

RADIOISOTOPE PRODUCTION AND MATERIALS DEVELOPMENT

REACTOR-PRODUCED ISOTOPES — 08-01-01

A. Biomedical Radioisotopes

1. Potassium-43

The objectives of this project are to prepare potassium-43 by the $^{43}Ca(n,p)^{43}K$ reaction, using isotopically enriched ^{43}CaO targets, and establish cooperative programs with medical institutions to evaluate potassium-43. It is potentially useful for metabolic and clinical studies of blood flow, rejection of transplanted organs, and kidney function. The half-life of potassium-43 is 22.5 hr; gamma-rays are 0.373 and 0.617 MeV.

Only one 10-mCi batch of potassium-43 was shipped this month because most researchers were at the Boston meeting of the Society of Nuclear Medicine. Several papers on myocardial imaging were presented at the meeting and Dr. Ralph Gorten, who formerly did some evaluation of potassium-43 in one of our former medical cooperative programs, presented a clinical evaluation of potassium-43 at a plenary session. There was evidence of a growing interest in myocardial scanning, judging by the increase in the number of papers presented. An informal meeting was arranged by Poggenburg for the users to discuss their results and exchange ideas. The consensus was that potassium-43 is a valuable aid in managing patients with myocardial infarcts and ischemic heart disease, but more and better clinical data are required to overcome the inertia of the cardiologists. An interesting point was made by Dr. Buddinger of Donner Laboratory that potassium-43 was better than cesium-129 because of the poorer affected area-to-background ratio of the latter resulting from the slower uptake of cesium in humans. This was noted many years ago by Dr. Love of University of Mississippi Medical Center. The Mississippi group believes their constant-infusion rate-of-uptake technique permits identifying the actual location of stenoses. Representatives of Medi-Physics, General Electric, and Diagnostic Isotopes, Inc., were also present; New England Nuclear was invited but did not attend.

2. Platinum-195m

Recent medical research has shown that some platinum compounds act as chemical therapeutic agents towards certain kinds of tumors. Platinum radioisotopes are

for investigation of the therapeutic mechanism involved. Platinum-195m (4.0 d) has gamma emissions of 99 keV (11%) and 129 keV (2.8%) that make it suitable for whole-body scanning.

Dr. Walter Wolf of the University of Southern California presented a work-in-progress report entitled "Radiopharmaceuticals in Clinical Pharmacology: the Pharmacokinetics of ^{195m}Pt-cis-dichlorodiammine Pt(II)" at the 19th Annual Meeting of the Society of Nuclear Medicine. Dr. Wolf is receiving platinum-195m from us under a cooperative research program to evaluate specific platinum compounds as antitumor therapeutic agents.

With the availability of higher enrichment platinum-194 target we will soon be able to supply the radioisotope in higher specific activity and lower platinum-197 activity (which necessitates a cooling period).

3. Gadolinium-152

Gadolinium-153 (242 days) offers potential as a useful and important radionuclide due to its favorable physical decay characteristics, e.g., it decays solely by electron capture to stable europium-153 with 97- and 103-keV gamma rays and europium x-rays as the predominant accompanying photon emissions. This energy range is useful for various types of gaging and transmission bone-scanning applications. The neutron burned-out europium control plates from HFIR offer a by-product source of highly enriched gadolinium-152 that would be prohibitively expensive to match by calutron separations.

A small-scale (but high-radiation level) separation of gadolinium from a spent Eu_2O_3-Al HFIR control plate, based on a bis(2-ethylhexyl)hydrogen phosphate (HDEHP) extraction of Gd(III) from chemically reduced Eu(II), was successfully completed. This experiment was designed to determine the effect, if any, of radiolysis products formed from the highly radioactive ^{152,154,155}Eu present in the control plates on the separation process as developed in tracer-level experiments. A sample of the control plate material that originally contained approximately 12.0 Ci of ^{152}Eu, 13.1 Ci of ^{154}Eu, and 5.2 Ci of ^{155}Eu was chemically reduced with zinc amalgam and then extracted with HDEHP to remove the trivalent rare earths. The organic extract was washed twice in the presence of zinc amalgam to increase the separation of Gd(III) and Eu(II). The first extraction separated approximately 95% of the europium from the gadolinium, whereas after the second wash, <1 mCi of europium-152 remained with the gadolinium fraction. Tracer level experiments indicated a gadolinium chemical yield of >90% for this separation, but with recycle of contaminated aqueous wash solutions back through the initial control plate dissolution procedure, gadolinium chemical yields of >98% should be easily achieved. Future work will be directed toward apparatus design for larger scale operation and gadolinium product characterization.

B. Reactor Products Pilot Production
(Production and Inventory Accounts)

Processed Units		Service Irradiations	
Radioisotope	Amount (mCi)	Type	Number
Calcium-47	8	Molybdenum	2
Copper-67	54		
Zinc-69m	279		
Iridium-192	a		

[a]Analysis not available.

ACCELERATOR-PRODUCED ISOTOPES — 08-01-02

A. Biomedical Radioisotopes

1. Gallium-67

The objectives of this program are to determine the optimal target configuration for gallium-67 (78.2 hr) production by the $^{68}Zn(p,2n)^{67}Ga$ reaction in acceptable purity and quantity and to provide gallium-67 for clinical applications research and development. Gallium-67 decays by electron capture with the emission of four main gamma rays of 93, 185, 300, and 394 keV with intensities of 42, 24, 17, and 5%, respectively.

Production of gallium-67 was suspended for two weeks early in this reporting period due to reduced demand caused by widespread attendance within the nuclear community of the 19th Annual Meeting of the Society of Nuclear Medicine. Weekly production was resumed with shipment of two 100-mCi batches of pharmaceutical-grade gallium-67 citrate to ORAU as part of the project of the Cooperative Group to Study Localization of Radiopharmaceuticals. Additional fractions were packaged as either the citrate or the chloride for shipment to other medical researchers.

Test irradiation of the electrodeposited zinc-68 on nickel on copper target design discussed last month has been successfully extended to a total integrated beam, of 22-MeV protons, of almost 3 mA-hr without loss of target integrity. Testing of this target design will continue simultaneously with gallium-67 production, thereby allowing target development while still fulfilling production obligations.

B. Cyclotron Products Pilot Production
(Production and Inventory Accounts)

July 1972 ORNL 86-Inch Cyclotron runs for ORNL and non-ORNL programs are given in Table 1.

Table 1. Cyclotron Irradiations and Runs for July 1972

Product	No. of Runs	Time (hr:min)	Total Charges
	ORNL Programs		
Cobalt-56	1	6:00	$ 703
Cobalt-61	17	48:10	4694
Gallium-67	1	8:55	854
Indium-111	2	7:50	808
		70:55	$7059
	Non-ORNL Programs		
Cobalt-57	1	53:15	$8760
Tantalum	1	2:15	334
		55:30	$9094

FISSION PRODUCTS — 08-01-03

A. Krypton-85 Enrichment

All krypton thermal diffusion isotope enrichment units are operating in a normal manner, with the count rate and mass 85 concentration continuing to build up in the center of each separation unit.

B. Cesium-137 Pilot Production
(Production and Inventory Accounts)

1. Processing and Process Status

Seven batches of ^{137}CsCl totaling 66,300 Ci were processed. Accumulation of cesium-137 by alum crystallization for another process cycle was started. The current cesium-137 process status is shown below.

Item	Cesium-137 (Ci)
In-process material	808,000
^{137}CsCl products	117,500
Sources in fabrication	0
Completed sources awaiting shipment	182,000

2. Operational Summary

Item	July 1972 No.	July 1972 Ci	CY 1972 No.	CY 1972 Ci	FY 1973 No.	FY 1973 Ci
HAPO shipments received	0	0	0	0	0	0
Product batches prepared	7	66,300	8	73,300	7	66,300
Sources						
Fabricated	0	0	23	55,300	0	0
Shipped	0	0	23	55,300	0	0
Special form cans						
Fabricated	0	0	10	113,900	0	0
Shipped	1	500	6	1,400	1	500

3. Current Orders

Current orders for cesium-137 as sources or bulk powder are shown below:

Customer	Amount (Ci)	Estimated Shipping Date
Brookhaven National Laboratory	203,000	FY 1973
Lockheed Georgia Company	∿35,000	a
Radiochemical Centre, England	400	August 1972
General Nuclear, Inc.	10	August 1972
Technical Operations, Inc.	8	August 1972

[a]Sources are in storage awaiting receipt of customer's container.

An order is on hand from Atomic Energy of Canada Limited for ∿113,000 Ci of cesium-137 as CsCl powder. The powder has been canned and stored awaiting release by customer.

4. Source Fabrication

A sealed can containing 500 Ci of cesium-137 was shipped to 3M Company.

C. Strontium-90 Pilot Production
(Production and Inventory Accounts)

1. Processing and Process Status

No strontium-90 processing was done this month. Waste disposal and strontium-90 storage from the hot-press cells are in progress. These cells will be placed in standby, and the strontium-90 powder-handling cells will be decontaminated for in-cell maintenance. The current strontium-90 process status is shown below.

Item	Strontium-90 (Ci)
In-process material	805,900
Strontium-90 products	426,200
Sources in fabrication	0
Returned SNAP sources	446,600
Completed sources awaiting shipment	221,000

2. Operational Summary

Item	July 1972		CY 1972		FY 1973	
	No.	Ci	No.	Ci	No.	Ci
HAPO shipments received	0	0	0	0	0	0
Product batches prepared	0	0	13	510,000	0	0
Sources						
Fabricated	0	0	9	581,000	0	0
Shipped	0	0	5	360,000	0	0
Special form cans						
Fabricated	0	0	39	5,600	0	0
Shipped	0	0	13	900	0	0

3. Current Orders

Current orders for strontium-90 as sources or bulk powder are shown below:

Customer	Amount (Ci)	Estimated Shipping Date
U. S. Navy (ORNL)	221,000	FY 1973
U. S. Navy	278,675	a

[a]To be released by customer.

4. URIPS-8 GENERATORS

The thermoelectric elements were installed in the fueled URIPS-8 generator housings and tested for operation. The generators were then sealed and the cooling fins installed.

Navy personnel have installed test loads and measurement instruments on the generators for extended testing. The following is a table of typical operating values obtained for the four generators:

Generator Number	Load		Shorted		Temperature (°F)	
	Volts	A	Volt	A	Hot Shoe	Fin
25	5.25	1.90	0.03	3.42	515	125
26	5.12	1.89	0.03	3.30	518	123
27	5.10	1.85	0.02	3.35	510	126
28	5.10	1.85	0.02	3.45	482	123

D. Short-Lived Fission Products Pilot Production (Production and Inventory Accounts)

Isotope	Number of Batches	Amount (Ci)
Xenon-133	2	∿700
Iodine-131	1	34
Mixed fission products	1	37
Barium-140	1	a
Strontium-89	1	a

[a]Analysis not available.

E. Promethium-147 Source Fabrication, Powder Shipments, and Current Orders

One can containing 325 Ci of promethium-147 was transferred to the Chemical Technology Division at ORNL. Minnesota Mining & Manufacturing Company will receive 5001 Ci in August 1972 and Donald W. Douglas Laboratories will receive 51,000 Ci in November 1972.

SOURCE DEVELOPMENT — 08-01-04

A. Krypton-85 Foil Sources

The vacuum chamber used in this project was modified to provide better sealing around the electrodes and to decrease air inleakage. This change appears to have helped correct the erratic results obtained in June. Several different foil materials were bombarded to evaluate this change. All foils used were 0.005 in. thick instead of the 0.001-in.-thick foils used previously, and all were bombarded at 3 kV for 2 min.

In the case of aluminum, there appears to be little difference in the surface radiation observed with the thin or the thick foils; an average radiation reading of 9.0 mR/hr.cm^2 was observed when depleted (∿1%) krypton-85 was used. Nickel and copper foils gave very low radiation readings, measuring 1.6 and 1.3 mR/hr.cm^2, respectively.

Tin foils occasionally showed radiation levels of ∿7 mR/hr.cm^2, but there were often melted spots observed on the surface during bombardment, and when this occurred, the krypton-85 uptake was very low. Lead foils showed a more pronounced tendency to burn out, and all radiation levels found were ∿1 mR/hr.cm^2. The low melting points of these two materials caused sputtering and/or evaporation which quickly coated the inside of the glass vacuum chamber and made it impossible to hold high voltage across the gap between the electrodes.

B. Beta Radiation Development

Our previous progress reports described the development and measurement of surface dose rates from three different beta sources using the extrapolation chamber, thermoluminescent dosimeters, and Fricke solution. The sources were made by uniformly dispersing strontium-90–yttrium-90, thallium-204, and technetium-99 in 0.030-in.-thick sheets of 4- by 4-in. plastic. Very dilute sources were fabricated in the same manner to provide samples for measurement of the beta particle energy (using a multichannel analyzer) and the linear absorption coefficient.

The extrapolation chamber study in which dose rate versus source size was made showed that a constant dose rate maximum was reached when the source diameter approached 1-3/4-in. diameter. This was true for the three collector electrode sizes used (3, 10, and 30 mm). It was therefore assumed that this maximum value represented the true surface dose rate. To test this assumption, a second method for measuring the surface dose rate was used, which requires the measurement of the beta particle emission rate, the average beta particle energy, and the linear absorption coefficient.

The average beta particle energy was measured with an anthracene detector using a multichannel analyzer. The linear absorption coefficient was calculated from aluminum half-thickness measurements. The beta emission rate was measured using the equipment shown in Fig. 1.

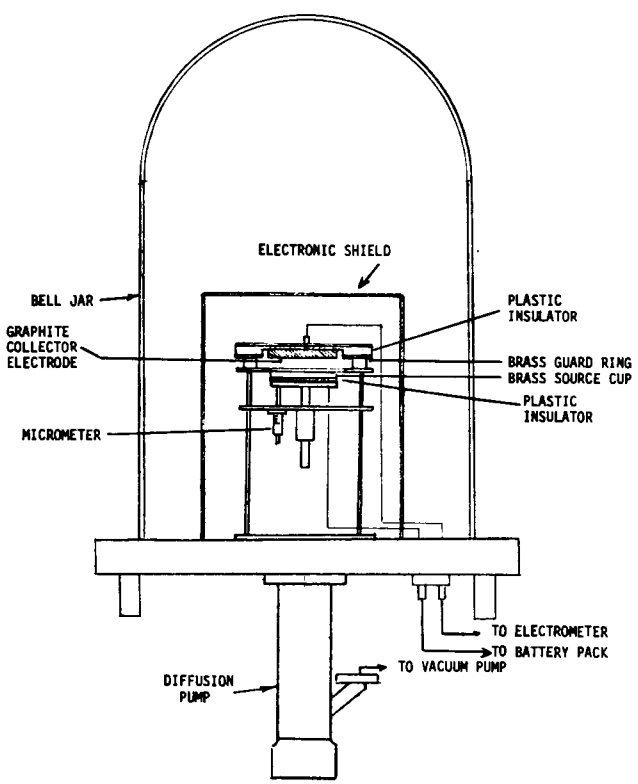

Fig. 1. Equipment for Determining Beta Emission Rate.

The measurements of these three quantities produce data for the calculation of the surface dose rate, which is defined precisely in the mathematical equation given in the Appendix, along with details of the measurements and calculations.

Since the measurement of the beta emission rate of the source is made with equipment which is very similar to the extrapolation chamber, it is important to briefly indicate the basic difference in the current measurement made with the two techniques.

The extrapolation chamber requires the measurement of electrical current produced by the collection of ions formed by the collision of beta particles and air molecules between two parallel electrically charged plates. The beta emission rate determination (beta current technique) requires the measurement of electrical current produced by the charge loss of the beta particles when absorbed in the graphite collector electrode. Ionization between accelerating electrode and collection electrode is held to a minimum by operating the equipment in a high vacuum. Electrometer readings of current versus system pressure showed that a pressure of $<1 \times 10^{-2}$ Torr was necessary to eliminate the effect of ionization current. However, the system was operated below 1×10^{-3} Torr.

The surface dose rates for the other two disks were measured by the same procedure as given in the Appendix. The results of these and previous measurements are shown in Table 2.

Table 2. Surface Dose Rates of Test Sources

	Surface Dose Rates (rads/hr in air)		
	$^{90}Sr-^{90}Y$	^{204}Tl	^{99}Tc
Extrapolation chamber	200	110	33.5
Thermoluminescent dosimeter	50	25	2.5
Fricke solution	206		
Beta current technique	221	101	27.4

The surface dose rates measured by the present beta current technique vary approximately 9 to 18% from those made previously with the extrapolation chamber. Since the beta current technique requires the determination of three variables, one of which is the average beta particle energy (especially difficult in the case of technetium-99), it may not be as reliable as a single measurement made by the extrapolation chamber. However, it does seem that one could state with confidence that the surface dose rate lies between the values obtained by these two techniques.

The experimental program to develop a good method for the measurement of beta and low-energy gamma source surface dose rates is complete and an ORNL report or journal article will be prepared. Some conclusions of this work are:

1. A minimum source size (>2-in. diam) is required for the extrapolation chamber to directly measure the surface dose rate; or if the source is less than the minimum size, correction factors must be applied to the extrapolation chamber measurement to convert it to the surface dose rate.

2. Surface dose rate measurements made on small sources (<3/4-in. diam) using the extrapolation chamber with a large collector electrode (1-1/2-in. diam) gave the same value (when the dose rate calculation was based on the sensitive volume defined by the source area) as that determined for 1-3/4- to 2-in.-diam sources using the conventional method (in which the dose rate calculation is based on a sensitive volume defined by the collector electrode diameter). This means that an increase in measurement accuracy can be obtained by using a large electrode when measuring small sources because it eliminates the necessity for correction factors and also because the signal output from the electrometer has been increased.

3. Considerable error in beta source surface dose rates occurs when they are measured with thermoluminescent dosimeters that have been calibrated against a cesium-137 gamma-ray source. Calibrated beta sources of the required energy should be used to standardize TLD's used for beta measurements.

4. Fricke solution can be used reliably to determine beta source surface dose rate if the source output is large enough to provide proper solution exposure in a reasonable time.

5. The combined use of thermoluminescent dosimeters (properly calibrated) and the extrapolation chamber would be a good system for measuring surface dose rates of a wide variety of source sizes and source strengths.

C. Radioisotope Characterization, Quality Control, and Standards

1. Radioisotope Characterization

Our experimental values for the half-lives of 61 nuclides have been published.[1] Data were received on AECL values for several nuclides, which were in good agreement with ours, including nonvariation of the half-life of copper-64 with chemical state.

Inquiries were answered on the optimum method of preparing cerium-141 and the decay scheme of cadmium-109.

---

[1] J. F. Emery, S. A. Reynolds, E. I. Wyatt, and G. I. Gleason, "Half-Lives of Radionuclides — IV," *Nucl. Sci. Eng.* 48, 319-23 (1972).

2. Radioisotope Special Analysis and Quality Control

S. A. Reynolds attended meetings of several standards groups at the ANS meeting in June, making an invited presentation on relevant ORNL activities at the meeting of ANS-16, the standards committee of the Isotopes and Radiation Division. Tentative plans for useful activities of the latter group are now being considered.

Arrangements have been made for measurements of low levels of krypton-85 in fission-xenon samples by beta counting. This is one of the techniques previously noted[2] as being more sensitive than the routinely used gamma spectrometry.

A "round robin" on measurement of gallium-67, proposed by commercial suppliers, has apparently been abandoned because of lack of interest.

In response to two inquiries about calibration of tritium-measuring devices, it was suggested that vaporization of tritiated-water standards into a system should be satisfactory, since much of the tritium is observed to be in the form of water.

Other inquiries were concerned with the effect of solution composition on measurement of pH by electrical and indicator methods, and the sample-to-sample variability in bioassay of excreted radionuclides.

RADIOISOTOPE SALES

ITEMS OF INTEREST

An inquiry was received from J. L. Shepherd Associates, Inc., regarding placing an order for 200,000 Ci of cesium-137. An inquiry was received from Argonne National Laboratory for liter quantities of xenon-128 produced by $^{127}I(n,\gamma)^{128}I \rightarrow (\beta^-, 25m) \rightarrow {}^{128}Xe$.

Shipments of interest during the month are listed below.

Customer	Isotope	Amount
	Large Quantities	
Government of Israel	Iodine-129	1 g
Institute National des Radioelements, Belgium	Krypton-85 (enriched)	50 Ci
Minnesota Mining & Mfg. Co.	Cesium-137	500 Ci
New England Nuclear Corp.	Tritium	5,000 Ci
Radiochemical Centre, England	Krypton-85 (normal)	100 Ci

[2]A. F. Rupp, *Radioisotope Program (8000) Progress Report for October 1970*, ORNL-TM-3228, Oak Ridge National Laboratory.

Customer	Isotope	Amount
Canrad Precision Industries, Inc.	Tritium	2,000 Ci
Los Alamos Scientific Laboratory	Tritium	3,885 Ci
ORNL, Solid State Division	Promethium-147	18,000 Ci

Items Shipped for Use in Cooperative Programs

Oak Ridge Associated Universities	Gallium-67	

Specially Approved Withdrawn Items

Mayo Clinic	Copper-67	3 lots
George Washington Medical Center	Copper-67	1 lot
University of Chicago	Copper-67	2 lots
University of North Carolina	Platinum-196 irradiation	1 shipment
Oak Ridge Associated Universities	Miscellaneous sample irradiation	2 shipments
University of Maryland	Molybdenum irradiation	1 shipment
University of Pittsburgh	Iodine-131	50 mCi
University of Rochester	Iodine-131	100 mCi
University of California, Berkeley	Iodine-131	30 mCi
Cleveland Metropolitan General Hospital	Iodine-131	50 mCi

Unusual Items

Samples of amino acids were irradiated in the strontium-90 storage facility and shipped to NASA, Moffett Field, California. A 50-mg sample of elemental iodine-129 was prepared for University of Maryland. A 25-mg sample of elemental iodine-129 was prepared for the National Bureau of Standards.

A summary of radioisotopes shipped during June is given in Table 3.

Table 3. Summary of Radioisotopes Shipped During June 1972

Radioisotope	Number of Shipments	Quantity (mCi)
Cesium-137	2	123,100
Strontium-89	5	25
Cerium-144	1	100
Promethium-147	2	19,340,000
Technetium-99	3	46,000 mg
Krypton-85, enriched	1	2,000

Table 3. continued

Radioisotope	Number of Shipments	Quantity (mCi)
Krypton-85, normal	8	235,000
Iodine-129	4	1,830 mg
Zirconium-95	4	52
Niobium-95	4	18
Praseodymium-143	2	12
Ruthenium-106	5	16
Yttrium-91	2	10
Xenon-133	73	107,580
Iodine-131	1	50
Argon-37	1	20
Calcium-47	8	7
Cobalt-60 (processed)	1	25
Phosphorus-33	2	101
Strontium-90	3	375,500
Tritium	19	13,563,200
Experimental products	42	
Service irradiations		
Cyclotron	3	
Reactors	2	
Targets	6	
Totals	204	33,746,816
		47,830 mg

The radioisotope sales proceeds and shipments for fiscal years 1971 and 1972 are given in Table 4.

Table 4. Radioisotope Sales and Shipments

Item	Income for FY 1971	Income for FY 1972
Inventory items	$ 631,206	$ 507,745
Major products	117,378	65,133
Radioisotope services	310,872	309,026
Cyclotron irradiations	124,016	143,230
Miscellaneous processed materials	66,064	62,225
Packing and shipping	86,214	72,280
Total Income	$1,335,750	$1,159,639
Number of Shipments	3,099	2,419

ADMINISTRATIVE

Travel by IDC personnel and visitors to the IDC are given in Tables 5 and 6, respectively.

Table 5. Travel of IDC Personnel

Site Visited	Purpose of Visit
Vanderbilt University	Compilation of standard data
Boston, Massachusetts	Attend meeting of nuclear medicine contractors with AEC Division of Biology and Environmental Research
Boston, Massachusetts	Attend Society of Nuclear Medicine Annual Meeting
AEC-Division of Applied Technology	Discuss operation of FPDL
AEC-Division of Space Nuclear Systems and Division of Applied Technology	Discuss isotopic power sources

Table 6. IDC Visitors

Visitors (affiliation)	Subject Discussed
University of Missouri	Production of molybdenum-99
Sandia Laboratory	Availability of plutonium-238 sources
General Electric Company	Isotopic power

PUBLICATIONS

REPORTS

Eugene Lamb and R. G. Donnelly, *ORNL Isotopic Power Fuels Quarterly Report for Period Ending March 31, 1972*, ORNL-4796, Oak Ridge National Laboratory.

R. G. Niemeyer, *Leak Testing Encapsulated Radioactive Sources*, ORNL-4529, Oak Ridge National Laboratory (July 1972).

A. F. Rupp, *Radioisotope Program (8000) Progress Report for June 1972*, ORNL-TM-3905, Oak Ridge National Laboratory.

APPENDIX

The surface dose rate (rads/day) was calculated using the following equation.[1]

$$\text{Dose} = (1.38 \times 10^{-9}) N P_\beta t$$

where

N = number of beta particles/sec.cm^2

P_β = beta stopping power (in air for this case)

t = time in days

P_β is evaluated as follows

$$P_\beta = \frac{(10^6)\mu_m \tilde{\tilde{E}}\, e^{-\mu_m X_m}}{\rho_m}$$

where

μ_m = absorption coefficient calculated from half-thickness measurement (cm^{-1})

$\tilde{\tilde{E}}$ = average beta particle energy calculated from multichannel analyzer measurements

X_m = thickness of the absorber

ρ_m = absorber density (g/cm^3)

In air

μ_m = 0.0107 cm^{-1} (from absorption measurement)

$\tilde{\tilde{E}}$ = 0.726 MeV (from multichannel analyzer)

X_m = 0 (for the surface dose rate), thus $e^{-\mu_m X_m} = 1$

ρ_m = 0.00128

then

$$P_\beta = \frac{(10^6)(0.726)(0.0107)(1)}{0.00128} = 6.07 \times 10^6 \text{ eV/g.cm}^2$$

The surface dose rate in rads/hr in air is then calculated as

$$\text{Dose at the surface} = (1.38 \times 10^{-9})(6.07 \times 10^6) N t$$

---

[1] *Radiation Hygiene Handbook*, 1st ed., pp. 14-15, McGraw-Hill, 1959.

The beta particle emission rate N was determined as follows. A 1-1/2-in.-diam disk strontium-90 source was placed on the brass source cup shown in Fig. 1 and covered with one layer of 0.0004-in. aluminum foil, which served as an accelerating electrode. This aluminum foil was held in place by a brass expansion ring which fit inside the brass cup. An accelerating voltage (67-1/2 V) was supplied by a battery pack. The collecting electrode assembly consisted of a graphite collector (3-in. OD) surrounded by a brass guard ring (5-1/2-in. OD). The collecting electrode was connected to the input of a Model 31 Cary vibrating reed electrometer. The distance from the source to the collector was set at 2 mm using the micrometer. Electrometer readings were taken at this distance and in 2-mm steps until a total distance of 10 mm separated the source and collector.

The results of these measurements are shown in Fig. 2. The extrapolation of the curves to zero distance provides the beta source emission rate which must be corrected for losses occurring in the aluminum foil. The equipment was operated at an absolute pressure $<10^{-3}$ Torr.

With the source distance set at 2 mm, electrometer readings were also taken with two and three layers of aluminum foil covering the source. The results of these measurements, shown in Fig. 2, are extrapolated to zero thickness. This provides the correction factor for the absorption of the beta energy in the accelerating electrode foil. Thus, the beta emission rate N is calculated as follows:

Electrometer output = 1.195 V (from Fig. 2 for ^{90}Sr-^{90}Y)

Aluminum foil correction = 1.03 (from Fig. 3)

Value of resistor in electrometer = 1.07×10^{12} ohms

$$\text{Beta current from 1-1/2-in.-diam disk} = \frac{(1.195)(1.03)}{1.07 \times 10^{12}}$$

$$= 1.15 \times 10^{-12} \text{ amps}$$

$$\text{or } 1.01 \times 10^{-13} \text{ amp/cm}^2 \text{ of beta source}$$

$$N = (1.01 \times 10^{-13})(6.28 \times 10^{18} \text{ betas/sec amp})$$

$$= 6.337 \times 10^{5} \text{ betas/sec cm}^2$$

The surface dose rate (rads/hr in air) for the 1-1/2-in.-diam ^{90}Sr-^{90}Y source is as follows:

$$\text{Surface Dose} = (1.38 \times 10^{-9})(6.337 \times 10^{5})(6.07 \times 10^{6})(1/24) = 221 \text{ rads/hr}$$

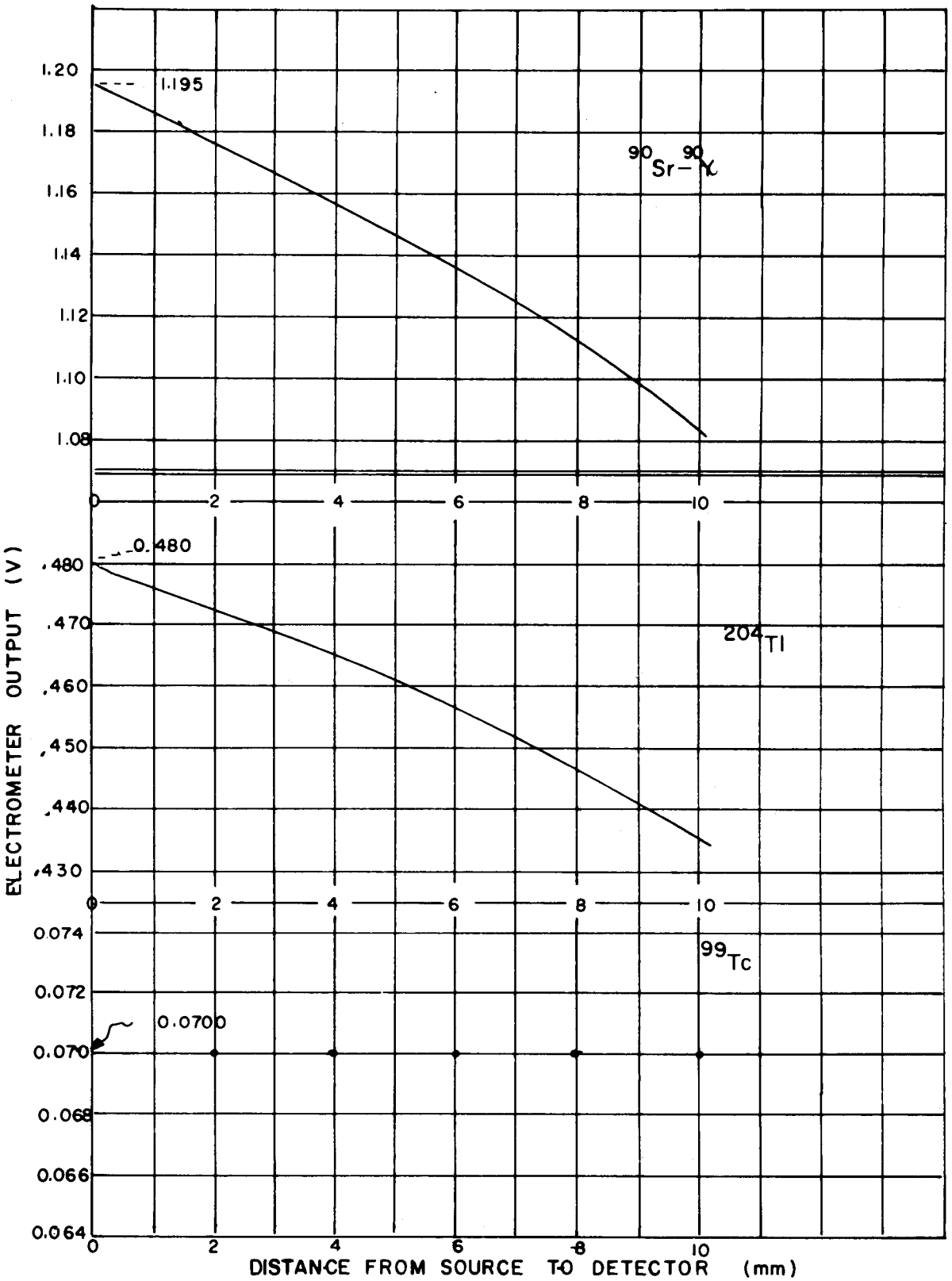

Fig. 2. Electrometer Output Versus Distance to Source.

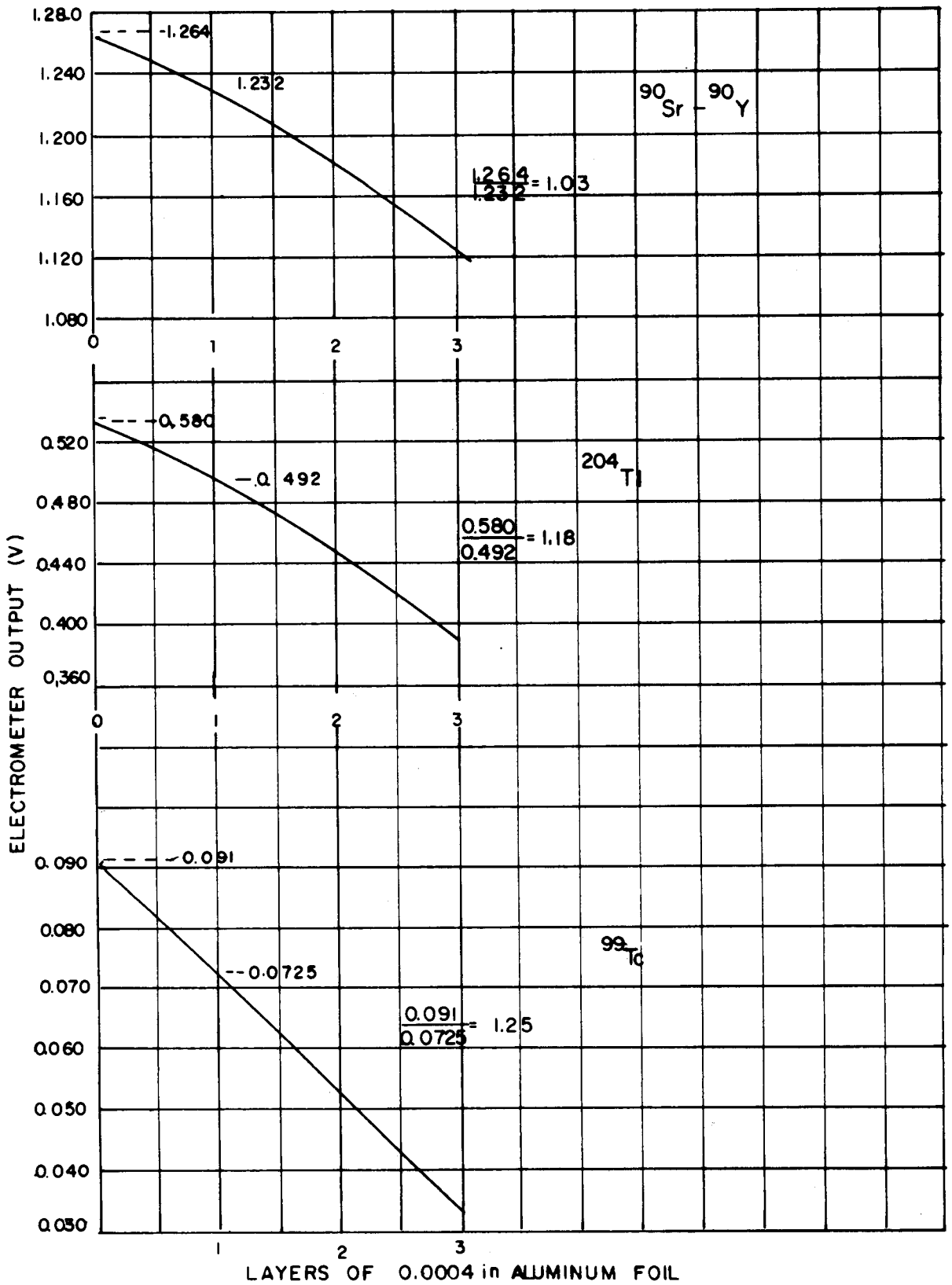

Fig. 3. Electrometer Output Versus Layers of 0.0004-in. Al Foil.

INTERNAL DISTRIBUTION

1. M. A. Baker
2. P. S. Baker
3. E. E. Beauchamp
4. G. E. Boyd
5-7. T. A. Butler
8. F. N. Case
9. W. R. Casto
10. J. A. Cox
11. F. L. Culler
12. W. C. Davis
13. J. S. Drury
14. J. H. Gillette
15. H. R. Gwinn
16. R. F. Hibbs
17. K. E. Jamison
18. Lynda Kern
19. E. H. Kobisk
20. E. Lamb
21. R. E. Leuze
22. J. L. Liverman
23. L. O. Love
24. W. S. Lyon
25. R. E. McHenry
26. H. H. Nichol
27. W. W. Parkinson
28. J. J. Pinajian
29. M. E. Ramsey
30. S. A. Reynolds
31-32. R. A. Robinson
33. D. A. Ross
34. A. F. Rupp
35. R. W. Schaich
36. A. H. Snell
37. K. A. Spainhour
38. M. R. Skidmore
39-40. H. F. Stringfield
41. D. B. Trauger
42. A. M. Weinberg
43. J. C. White
44-45. Central Research Library
46. Document Reference Section
47-51. Laboratory Records Department
52. Laboratory Records - RC

EXTERNAL DISTRIBUTION

53. G. A. Andrews, ORAU, Medical Division, Oak Ridge, Tennessee
54. H. L. Atkins, Brookhaven National Laboratory, Upton, New York
55. D. S. Ballantine, AEC, Washington, D. C.
56-59. R. F. Barker, AEC, Washington, D. C.
60. N. F. Barr, AEC, Washington, D. C.
61. G. L. Borsheim, ARHCO, Richland, Washington
62. C. R. Buchanan, AEC, Washington, D. C.
63. R. L. Butenhoff, AEC, Washington, D. C.
64. T. D. Chikalla, PNL, Richland, Washington
65. D. F. Cope, AEC Site Representative, ORNL
66. J. C. Dempsey, AEC, Washington, D. C.
67. E. E. Fowler, AEC, Washington, D. C.
68. J. D. Goldstein, AEC, Washington, D. C.
69. A. Gottschalk, Argonne Cancer Research Hospital, Chicago, Illinois
70. F. D. Haines, AEC, Washington, D. C.
71. W. D. Holloman, AEC, Washington, D. C.
72. J. W. Irvine, MIT (Consultant)
73-75. J. H. Jarrett, PNL, Richland, Washington
76. D. K. Jones, AEC, Richland, Washington
77. J. Lawrence, Lawrence Berkeley Laboratory, Berkeley, California
78. J. E. Machurek, AEC, Washington, D. C.
79. J. N. Maddox, AEC, Washington, D. C.
80. J. C. Malaro, AEC, Washington, D. C.
81. B. Manowitz, Brookhaven National Laboratory, Upton, New York
82. L. A. Miller, AEC, Washington, D. C.

83. W. E. Mott, AEC, Washington, D. C.
84. H. A. O'Brien, LASL, Los Alamos, New Mexico
85. G. J. Rotariu, AEC, Washington, D. C.
86. W. D. Sandberg, AEC, Aiken, South Carolina
87. R. W. Shivers, AEC, Washington, D. C.
88. F. J. Skozen (Krizek), Argonne Cancer Research Hospital, Chicago
89. Robert E. Smith, Atlantic Richfield Hanford Company, Richland, WA
90. L. G. Stang, Jr., BNL, New York
91-96. D. H. Turno, SRL, Aiken, South Carolina
97. A. R. Van Dyken, AEC, Washington, D. C.
98. Research and Technical Support Division, ORO
99-100. Technical Information Center, OR