LOCKHEED MARTIN ENERGY RESEARCH LIBRARIES
3 4456 0514916 7

CENTRAL RESEARCH LIBRARY
DOCUMENT COLLECTION

OAK RIDGE NATIONAL LABORATORY
operated by
UNION CARBIDE CORPORATION • NUCLEAR DIVISION
for the
U. S. ATOMIC ENERGY COMMISSION

ORNL-TM-3834

cy. 45

RADIOISOTOPE PROGRAM (8000) PROGRESS REPORT FOR APRIL 1972

A. F. Rupp

~~DISTRIBUTION LIMITED TO AEC AND AEC CONTRACTORS~~

OAK RIDGE NATIONAL LABORATORY
CENTRAL RESEARCH LIBRARY
DOCUMENT COLLECTION
LIBRARY LOAN COPY
DO NOT TRANSFER TO ANOTHER PERSON
If you wish someone else to see this document, send in name with document and the library will arrange a loan.
UCN-7969
(3 3-67)

NOTICE This document contains information of a preliminary nature and was prepared primarily for internal use at the Oak Ridge National Laboratory. It is subject to revision or correction and therefore does not represent a final report.

This report was prepared as an account of work sponsored by the United States Government. Neither the United States nor the United States Atomic Energy Commission, nor any of their employees, nor any of their contractors, subcontractors, or their employees, makes any warranty, express or implied, or assumes any legal liability or responsibility for the accuracy, completeness or usefulness of any information, apparatus, product or process disclosed, or represents that its use would not infringe privately owned rights.

ORNL-TM-3834

Contract No. W-7405-eng-26

ISOTOPES DEVELOPMENT CENTER

RADIOISOTOPE PROGRAM (8000) PROGRESS REPORT FOR APRIL 1972

A. F. Rupp

Work Sponsored by
AEC Division of Applied Technology

MAY 1972

OAK RIDGE NATIONAL LABORATORY
Oak Ridge, Tennessee 37830
operated by
UNION CARBIDE CORPORATION
for the
U.S. ATOMIC ENERGY COMMISSION

LOCKHEED MARTIN ENERGY RESEARCH LIBRARIES

3 4456 0514916 7

CONTENTS

Page

RADIOISOTOPE PRODUCTION AND MATERIALS DEVELOPMENT 1

REACTOR-PRODUCED ISOTOPES - 08-01-01 1

A. Biomedical Radioisotopes 1

1. Phosphorus-33 1
2. Potassium-43 2

B. Antimony-124 3

C. The Rare-Earth Radionuclides 4

1. Holmium-166m 5

D. Reactor Products Pilot Production 7

ACCELERATOR-PRODUCED ISOTOPES - 08-01-02 7

A. Biomedical Radioisotopes 7

1. Gallium-67 7

B. The Rare-Earth Radionuclides 8

1. Europium-149 9

C. Accelerator Products Pilot Production 10

FISSION PRODUCTS - 08-01-03 10

A. Krypton-85 Enrichment 10

B. Cesium-137 Pilot Production 11

1. Processing and Process Status 11
2. Operational Summary 12
3. Current Orders 12

C. Strontium-90 Pilot Production 12

1. Processing and Process Status 12
2. Operational Summary 16
3. Current Orders 16
4. Source Fabrication 16
5. URIPS-8 Generators 16

D. Short-Lived Fission Products Pilot Production 17

Page

E. Promethium-147 Source Fabrication, Powder Shipments, and Current Orders 17

SOURCE DEVELOPMENT - 08-01-04 17

A. Dose-Rate Measurements with Extrapolation Chamber 17

B. Strontium-90 Beta Sources 21

C. Aluminum Foil Krypton-85 Sources 21

D. Radioisotope Safety 22

1. Tritium Loss From Wrist Watches 22
2. Tritium Loss From Self-Luminous Paints 22

E. Krypton-85 Source for NaK Flow Measurement 23

F. Radioisotope Characterization, Quality Control, and Standards 24

1. Radioisotope Characterization 24
2. Radioisotope Special Analysis and Quality Control . . . 24

G. Radiation Processing 24

1. Radiation-Enhanced Oxidation of Chicken Processing Plant and Tannery Plant Effluents 24

RADIOISOTOPE SALES

ITEMS OF INTEREST 28

ADMINISTRATIVE 30

PUBLICATIONS 30

JOURNALS 30

REPORTS 31

PAPERS PRESENTED 31

TRANSLATION 31

RADIOISOTOPE PROGRAM (8000) PROGRESS REPORT FOR APRIL 1972

A. F. Rupp

RADIOISOTOPE PRODUCTION AND MATERIALS DEVELOPMENT

REACTOR-PRODUCED ISOTOPES - 08-01-01

A. Biomedical Radioisotopes

1. Phosphorus-33

The purpose of this project is to develop methods of preparing hundred-millicurie quantities of carrier-free phosphorus-33 containing $\leq$5% phosphorus-32. The two methods for producing phosphorus-33 being evaluated are based on the irradiation of highly enriched targets of sulfur-33 (>92 at. %) or chlorine-36 (approximately 63 at. %) in a fast neutron flux. Phosphorus-33 (25.2 days; 0.248-MeV β^-_{max}) has both a longer half-life and a lower energy beta than phosphorus-32 (14.3 days; 1.709-MeV β^-_{max}), which makes it advantageous for autoradiography, longer ecological and agricultural experiments than with phosphorus-32, synthesis of tagged complex organophosphorus compounds, and double labeling experiments.

A target consisting of 1.36 g 70% enriched $K^{36}Cl$ that had been irradiated for 4 months was processed, and 1.1 Ci of phosphorus-33 was placed in Sales inventory. The phosphorus-32 activity was 3.5% of the phosphorus-33 activity, and a trace of chromium-51 activity ($\sim$0.004%) was also detected. The activity at discharge is calculated as 1.53 Ci, which is consistent with an expected yield of $\sim$1 Ci/g $K^{36}Cl$ at this enrichment.

No problems were encountered in the processing, although the presence of cesium-134 in the $K^{36}Cl$ target was again encountered. It was removed by treatment with ammonium phosphomolybdate as reported last month. The target was extended by blending it with 52% enriched $K^{36}Cl$, and it will be recovered for future irradiation.

An inquiry concerning the possibility of 0.5-Ci shipments at monthly intervals has been received. It is urgent that the available target material be extended as rapidly as possible. In order to do this, the available space in the phosphorus-33 reactor target assemblies will be filled with ampuls containing low-enrichment $K^{36}Cl$ for further enrichments. We are presently cycling three $K^{36}Cl$ targets and one $K_2{}^{33}SO_4$ target, each capable of producing >0.5 Ci of product. We can accommodate the inquiry, but scheduling will be tight with the targets presently on hand.

2. Potassium-43

The objectives of this project are: to prepare potassium-43 by the $^{43}Ca(n,p)^{43}K$ reaction, using isotopically enriched ^{43}CaO targets, in quantities sufficient for medical and biological experiments; to define a method for separating potassium-43 from the target in a purity suitable for medical use; and to establish cooperative programs with medical institutions interested in evaluating its usefulness. Potassium-43, with a half-life of 22.5 hr and gamma-ray emissions of 0.373 and 0.617 MeV, is potentially useful for metabolic and clinical studies of blood flow, rejection of transplanted organs, and kidney function because the dose rate would permit multiple doses.

Two batches of potassium-43 were shipped. Recipients included University of Mississippi Medical Center, Johns Hopkins Medical Institutions, University Hospitals of Cleveland, and V. A. Center, Wood, Wisconsin. The data for the runs are summarized in Tables 1 and 2.

Table 1. Yield of Potassium-43 from Calcium-43 Targets

	Target 456	Target 479
Weight ^{43}CaO (mg)	235[a]	77[b]
Irradiation time (hr)	66.0	41.0
Product delivery date	4/25/72	4/4/72
Total product at 8:00 AM on delivery date (mCi)		
Potassium-43	16.2	0.92
Potassium-42	2.1 (13.2%)	0.069 (7.4%)

[a]49% ^{43}Ca recovered 1/15/72 from targets 445 and 446.
[b]61.6% ^{43}Ca, new target batch 136326.

Target 479 was found to be leaking, and its removal from the reactor one day early partially accounts for the reduced yield. Additionally, the target was placed in a position with less than customary fast flux. It was processed to check out the feasibility of the procedure in the cell facilities of the routine processing group. It was difficult to monitor the column with the gamma probe because of the reduced yield, but in general the procedure is adaptable to these facilities.

Table 2. Radionuclides Found in Dissolver Sample by Gamma Scanning

Radionuclide	Half-Life	Activity at Discharge[a] (mCi)		Activity Concentration at Discharge (μCi/mg of target)	
		Target 456	Target 479	Target 456	Target 479
Potassium-43	22.5 h	39.6	6.4	228	83
Potassium-42	12.4 h	9.6	1.7	55	22
Sodium-24	15.0 h	6.3	0.35	36	4.5
Manganese-56	2.58 h	15.3	—	88	—
Strontium-87m	2.83 h	12.5	—	72	—
Calcium-47	4.53 d	0.85	0.044	4.9	0.57
Scandium-46	83.8 d	14.	—	83	—
Scandium-47	3.38 d	0.95	—	5.4	—
Copper-64	12.7 h	4.6	—	26	—
Samarium-153	46.8 h	0.19	—	1.1	—
Zinc-69m	13.8 h	3.6	—	21	—
Gold-199	3.15 d	0.08	—	0.4	—
Chromium-51	27.8 d	0.07	—	0.3	—
Bromine-82	35.4 h	—	0.021	—	0.27

[a]Total target.

B. Antimony-124

Because of its half-life (60 days) and ease of preparation, antimony-124 offers a convenient radionuclide to initiate a study of antimony radioisotopes. In addition, it is of particular interest since Kumar[1] (formerly of ORNL) has predicted definite properties for the tellurium-124 nucleus using the pairing plus quadrupole model. Our interest was to test production parameters and radiochemical and electrochemical behavior of antimony.

An earlier attempt[2] to prepare beta-ray spectrometer samples by vacuum evaporation of isotopically enriched samples of antimony-123 (97.7% antimony-123 and 2.3% antimony-121) on four 3- by 30-mm strips of 0.001-in. aluminum foil was hampered by the fact that during the irradiation the deposits of antimony-123 ($\sim$50 $\mu g/cm^2$) were apparently vaporized within the quartz ampul so that the back side of each aluminum strip showed appreciable antimony-124 activity, thus producing additional peaks in the internal conversion spectrum seen by the $\pi\sqrt{2}$ double-focusing, iron-core, 50.5-cm-radius beta-ray spectrometer. In addition, tantalum activity (in the absence of an electron-beam evaporator device, a standard tantalum boat was used) produced other extraneous peaks.

In our recent work, therefore, we made the irradiation first and then deposited antimony-124 activity onto the foils. Because of the 7-barn

[1]K. Kumar and M. Baranger, *Nucl. Phys.* A110, 529 (1968); K. Kumar and M. Baranger, *Nucl. Phys.* A122, 273 (1969).
[2]J. C. Manthuruthil, R. E. Beaty, and J. J. Pinajian, *Bull. Am. Phys. Soc.* 14, 569 (1969); R. E. Beaty, M.S. Thesis, Air Force Institute of Technology, June 1969.

capture cross section of antimony-124 (see Fig. 1), appreciable amounts of 2.73-year antimony-125 will be produced with prolonged irradiation time at a neutron flux of 2.45×10^{15} n/cm^2.sec. Hence, an irradiation time of 14 days was chosen, yielding a specific activity of ∿200 mCi of antimony-124 per milligram of antimony and limiting the antimony-125 content to <0.06%.

A 14.4-mg irradiated target was dissolved in hydrochloric acid, evaporated to incipient dryness, and the $SbCl_3$ was taken up in 1 *M* HCl. Beta-ray spectrograph targets were prepared by electroplating a 4- by 25-mm area of 0.001-in. gold foils with antimony at a plating current of ∿10 mA at 2.5 V. Plating times of 2.5 and 5.0 hr produced uniform adherent sources of ∿10 and ∿20 mCi antimony-124 having densities of 50 and 100 μg/cm^2, respectively.

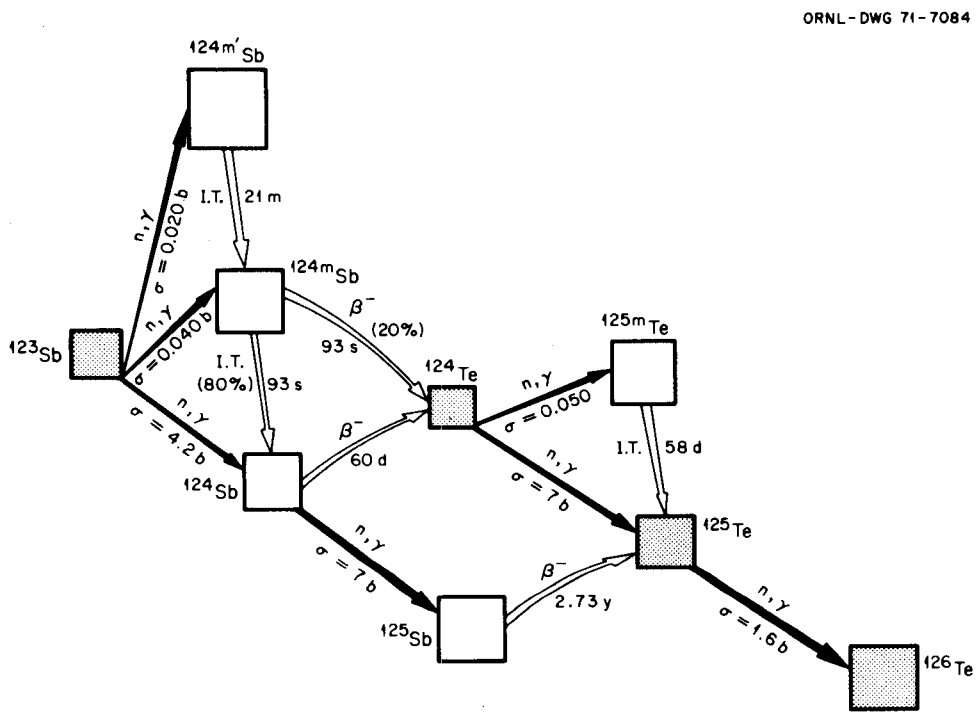

Fig. 1. Production Mode for Antimony-124.

C. The Rare-Earth Radionuclides

It is becoming increasingly apparent that various insoluble compounds of rare earths (e.g., sulfides) may be extremely useful in mechanically outlining obstructions due to cancerous tissue in the capillary and lymphatic system of the body. The wide span of half-lives and gamma radiations available in this class of radionuclides which have essentially identical chemical properties allows a wide choice of nuclides.

Furthermore, many of these nuclides exhibit Mössbauer properties, again with a wide range of resonance cross section, natural width, minimum observable width, and recoil energy.

In addition, the rare earths occupy a region of the chart of the nuclides where the spherical nuclei change to permanently deformed nuclei, with abrupt changes in nuclear structure properties. This transition region is particularly attractive for comparison of the observed nuclear properties to theoretical predictions.

1. Holmium-166m

The long-lived (1200 years) holmium-166m activity is of interest because the β^--decay product, erbium-166, exhibits Mössbauer properties (γ_M = 80.6 keV, 12.5%) and because of its attractiveness as a possible broad-range gamma-ray standard. Table 3 lists nine gamma rays of holmium-166m whose intensities are more than 10%.

Table 3. Gamma-Ray Energy and Intensity Values[a] from the Decay of 1200-year Holmium-166m[b]

E_γ (keV)	I_γ (% per decay)
80.573	12.5
184.407	73.2
280.456	29.8
410.941	11.6
529.813	10.2
711.693	58.7
752.265	13.1
810.309	62.7
830.560	10.6

[a]C. W. Reich and J. E. Cline, *Nucl. Phys.* A159, 181 (1970).
[b]I_γ >10 only are listed.

In addition, 27-hr holmium-166g and 1200-year holmium-166m make a convenient pair of rare-earth radionuclides for short- and long-term biological investigations. Its distribution in the skeleton and liver of animals may be used as an index of the biological behavior of tripositive actinides. This similarity in behavior, assuming that their metabolism is based on fundamental chemical basis (i.e., ionic radius), has been shown to be good.[3]

[3]P. W. Durbin, *Health Phys.* 2, 225 (1960); P. W. Durbin, *Health Phys.* 8, 665 (1962).

Our purpose in this work is to establish production parameters for high specific activity holmium-166m, to develop a separations procedure for a high-purity product, and to examine the decay scheme to establish accurate energies and intensities.

A preliminary 23.6-day irradiation of 71 mg of Ho_2O_3 at a neutron flux of 1.0×10^{15} n/cm^2.sec was used to examine the holmium-166m activity for impurities. The target, after cooling, was dissolved in nitric acid, converted to the chloride, and passed through a Dowex 1-X8 anion exchanger to remove cobalt-60. The rare-earth activities were then passed through a Bio-Rad AG 50W-X4, 20-30 μm, cation exchanger (α-hydroxyisobutyric acid, pH - 4.6) at 500 psi in order to isolate the holmium fraction. A Dowex 50W-X4 cation exchanger was used to remove the butyrate moiety and further isolate the holmium-166m. Gamma spectrometric examination showed the presence of europium-154.

Because of the europium-154 contamination, the target chemistry was modified. The first and second samples of 142.4 mg Ho_2O_3 irradiated for 50 days at a flux of 1.0×10^{15} n/cm^2.sec were treated in the same fashion. After dissolution of the target, cobalt carrier (∿2 mg) was added to aid in the separation of cobalt during passage through the Dowex 1 anion exchanger. After the first pass through the cation exchanger (Bio-Rad AG 50W-X4, elution with α-hydroxyisobutyric acid), europium (5 mg) and terbium (3 mg) carriers were added. The former aids in the separation by isotopic dilution, the latter serves to further displace the elution peaks of europium and holmium. The holmium butyrate was then passed through a Dowex 50W-X4 cation exchanger in strongly acid form and washed free of butyrate; holmium was finally stripped off the column with 6 *M* HCl.

A yield of 17.5 μCi of holmium-166m per milligram of holmium target was realized. Approximately 20% losses were incurred during the processing. This compares favorably with the calculated yield of 21.8 μCi of holmium-166m per milligram of holmium target, based on the half-lives and cross sections shown in Fig. 2. The specific activity of this product was calculated to be 28 μCi of holmium-166m per milligram of holmium.

The product, contained in dilute hydrochloric acid, was examined with a NaI(Tl)-Ge(Li) directional correlation system using highly stable digital gates. Preliminary results will be presented at the Washington meeting of the American Physical Society.

A long-term (∿2 year) irradiation has been initiated. It is estimated that the 61.4 mg Ho_2O_3 target material will have ∿96.6% of the holmium-165 "burned up." Assuming that the holmium-166m burnup is negligible, then the product will have 58% of the holmium atoms present as holmium-166m and will represent a specific activity of 1.05 mCi of holmium-166m per milligram of holmium.

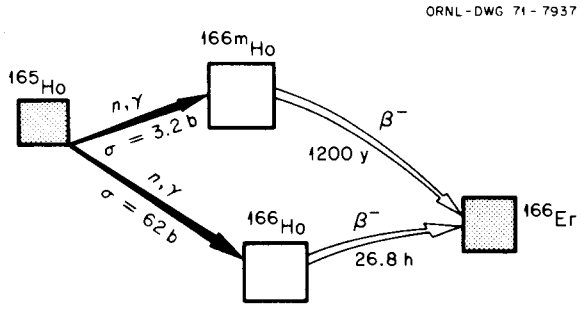

Fig. 2. Production Mode for Holmium-166m.

D. Reactor Products Pilot Production (Production and Inventory Accounts)

Processed Units		Service Irradiations	
Radioisotope	Amount (mCi)	Type	Number
Copper-67	22	Tungsten-180	2
Calcium-47	10		

ACCELERATOR-PRODUCED ISOTOPES - 08-01-02

A. Biomedical Radioisotopes

1. Gallium-67

The objectives of this program are to determine the optimal target configuration for gallium-67 (78.2 hr) production by the $^{68}Zn(p,2n)^{67}Ga$ reaction in acceptable purity and quantity and to provide gallium-67 for clinical applications research and development. Interest in this isotope has been spurred by evidence, obtained by the Medical Division of Oak Ridge Associated Universities (ORAU), of a high uptake of carrier-free gallium-67 by lymphoid tumors in both animals and humans.

Gallium-67 decays by electron capture with the emission of four main gamma rays of 93, 185, 300, and 394 keV with intensities of 42, 24, 17, and 5%, respectively.

Five weekly shipments of 100-mCi batches of gallium-67 citrate were supplied to ORAU during this period as part of the project of the Cooperative Group to Study Localization of Radiopharmaceuticals, with additional fractions of each batch being packaged as either the citrate or the chloride and supplied to others.

Development work on a high-yield, electrodeposited zinc-on-copper target design has been extended into its last phases — actual test irradiation of both natural zinc and enriched zinc-68 targets. Six natural zinc targets were prepared from analytical reagents (AR) by the electroplating procedure finally adopted, and two were test irradiated at >500-μA beam currents for 4 and 5 hr, respectively, without failure. The 4-hr target appeared no different after irradiation than before, whereas the 5-hr target showed a slight discoloration in the area of greatest beam intensity. The successful irradiation of these last two natural zinc targets indicated that the target preparation and irradiation conditions were reliable enough to start work with enriched zinc-68 (98.5%).

Preliminary examination showed that the ^{68}ZnO should be chemically purified in order to produce a reliable enriched target. This was done using a hydrous zirconium oxide (HZO) inorganic ion-exchange column as described in the work of Maeck *et al.*[4] Enriched zinc-68 was converted to $^{68}ZnSO_4$,

[4]W. J. Maeck, M. E. Kussy, and J. E. Rein, *Anal. Chem.* 35, 2086 (1963).

then dissolved in 0.01 *N* HNO_3 and passed through an HZO column. Cadmium, lead (another low-melting metal impurity), and gallium bonded tightly at the top, whereas zinc, with a K_D <1, passed directly through, and the last traces were easily washed off the column with 0.01 *N* HNO_3. The zinc-HNO_3 eluate was evaporated to dryness and the solid residue was converted to $ZnSO_4$ for starting material for the plating electrolyte preparation. A target prepared from this purified $^{68}ZnSO_4$ was very similar to those prepared in earlier experiments when AR-grade chemicals were used and performed similarly upon test irradiation. This target was irradiated successfully for 6-1/2 hr with 22-MeV protons at >500-μA beam currents. Upon removal from the cyclotron, the target showed discoloration in the region of maximum beam intensity, but it did not show any signs of melting. This discoloration may be due to either slight sublimation of the zinc target material in that area, or an aging effect caused by radiation damage and possibly a change in surface structure. No contamination difficulties were encountered upon removal from the cyclotron.

A production rate of 1.3 Ci/mA-hr, which agrees well with the 1.4 Ci/mA-hr value estimated from earlier experiments using natural zinc targets, and machine yield of 0.67 Ci/hr were measured for this target; whereas the gallium-66 content of the product was only 3.3%, slightly less than estimated earlier. With this level of production, sufficient material can be produced in one irradiation to meet two weeks demand, i.e., ∿225 mCi/week.

Additional development work will be carried out during the next month on zinc-68 target recovery and purification.

B. The Rare-Earth Radionuclides

It is becoming increasingly apparent that various insoluble compounds of rare earths (e.g., sulfides) may be extremely useful in mechanically outlining obstructions due to cancerous tissue in the capillary and lymphatic system of the body. The wide span of half-lives and gamma radiations available in this class of radionuclides which have essentially identical chemical properties allows a wide choice of nuclides.

Furthermore, many of these nuclides exhibit Mössbauer properties, again with a wide range of resonance cross section, natural width, minimum observable width, and recoil energy.

In addition, the rare earths occupy a region of the chart of the nuclides where the spherical nuclei change to permanently deformed nuclei, with abrupt changes in nuclear structure properties. This transition region is particularly attractive for comparison of the observed nuclear properties to theoretical predictions.

1. Europium-149 (93. day)

Carrier-free europium-149 was produced in the ORNL 86-Inch Cyclotron by the $^{149}Sm(p,n)^{149}Eu$ reaction utilizing the ∿87-μA beam of 22-MeV protons. The proton energy was degraded to 10 MeV by the use of absorbers in order to inhibit the production of europium-148 (Q = -9.7 MeV).

The irradiated target, which was contained in a nickel tube, was dissolved in nitric acid, and the rare earths were precipitated with ammonium hydroxide. The rare-earth hydroxide was dissolved in hydrochloric acid and passed through a Dowex 1 anion exchange column in the chloride form. The eluate was evaporated down to dryness, taken up in dilute nitric acid, and passed through a Dowex 50W, 20-40 μm, cation exchanger operating at 80°C and 500 psi with 0.25 *M* α-hydroxyisobutyric acid as the eluant. The eluate, containing the rare-earth butyrate was then passed through a Dowex 50W, 50-100 mesh, cation exchanger to remove the butyrate. The europium-149 was stripped off this column with 6 *M* HCl. Details of the production are given in Table 4.

Table 4. Data on Europium-149 Production

Half-life	93. days
Production method	$^{149}Sm(p,n)^{149}Eu$
Reaction Q-value	-1.540 MeV
Cyclotron	ORNL 86 Inch
Facility	Window
Beam current	86.6-μA protons
Beam energy on target	10. MeV
Target — $^{149}Sm_2O_3$ (97.72% isotopically enriched)	116. mg
Yield:	
Europium-148	0.22 μCi/hr
Europium-149	16.4 μCi/hr
Europium-152	1.3 nCi/hr
Europium-154	6.3 nCi/hr
Production rate:	
Europium-148	2.5 μCi/mA-hr
Europium-149	189 μCi/mA-hr
Europium-152	a
Europium-154	a

[a]The europium activities are probably due to both the europium produced via the (p,n) reaction and the (n,γ) reaction on these nuclides plus the very slight amount of europium impurity present in the target material.

C. Accelerator Products Pilot Production (Production and Inventory Accounts)

Table 5 gives the April 1972 accelerator runs for ORNL and non-ORNL programs.

Table 5. Accelerator Irradiations and Runs for April 1972

Product	No. of Runs	Time (hr:min) Beam	Misc.	Total	Total Charges
		ORNL Programs			
Gallium-67	6	16:40	6:00	22:40	$2,195
Europium-147	1	2:00	0:50	2:50	282
Indium-111	5	15:50	5:25	21:15	2,179
		34:30	12:15	46:45	$4,656
		Non-ORNL Programs			
Titanium-44	1	10:00	1:15	11:15	$1,807

FISSION PRODUCTS - 08-01-03

A. Krypton-85 Enrichment

The high-level unit CD (see Fig. 3) has recovered strongly from the emergency shutdown last month caused by a loss of cooling water, but the other units appear to have leveled off. Product will be transferred from the low-level units into the high-level run to boost the maximum concentration, and an inspection shutdown of one cell will be scheduled next month.

Unit	Activity in Unit (Ci)	Time Since Last Product Removal (days)	Count Rate in Product Section (counts/min) March 1972	April 1972
A	264	280	4,350	4,150
AB	Xenon	90	—	—
B	264	280	7,500	7,500
C	1737	135	4,450	4,100
CD	2269	240	13,100	14,800
C	1615	135	4,200	4,200

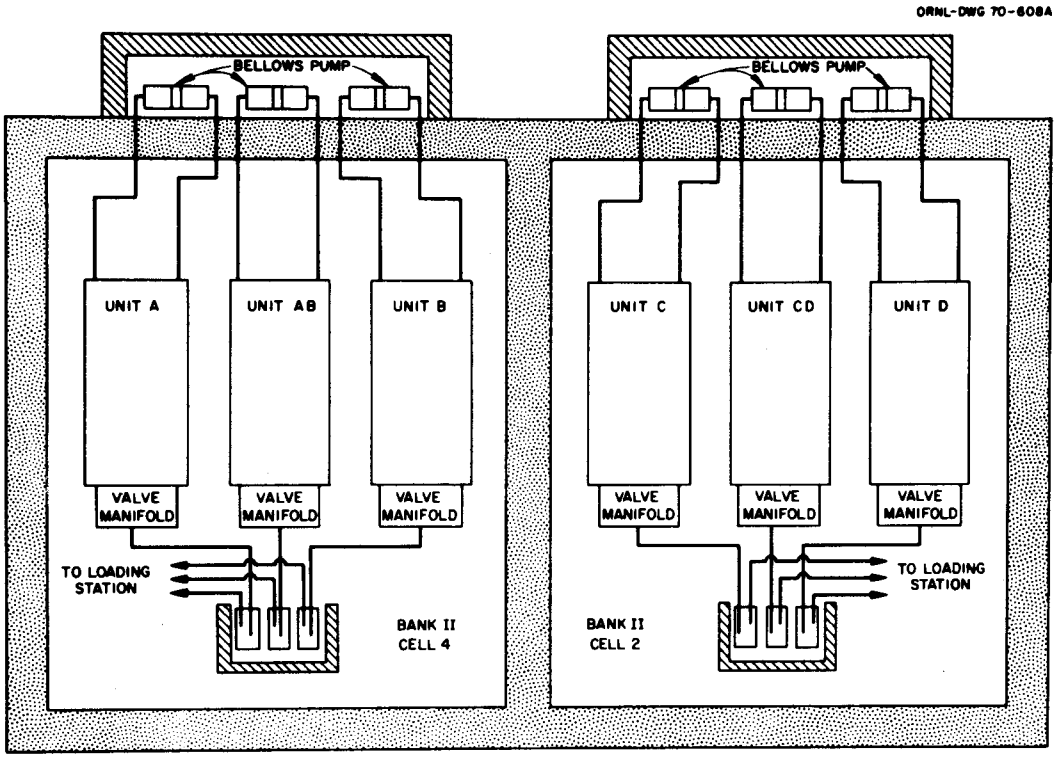

Fig. 3. Schematic Arrangement of Krypton-85 Columns.

B. Cesium-137 Pilot Production (Production and Inventory Accounts)

1. Processing and Process Status

No cesium-137 processing was done this month. The current cesium-137 process status is as follows:

Item	Cesium-137 (Ci)
In-process material	862,000
^{137}CsCl products	115,400[a]
Sources in fabrication	0
Completed sources awaiting shipment	70,900

[a]Includes 113,600 Ci holding for delivery to customer.

2. Operational Summary

Item	April 1972 No.	April 1972 Ci	CY 1972 No.	CY 1972 Ci	FY 1972 No.	FY 1972 Ci
HAPO shipments received	0	0	0	0	1	414,200
Product prepared	0	0	1	7,000	19	195,000
Sources						
Fabricated	0	0	23	55,300	55	105,300
Shipped	0	0	23	55,300	39	73,900
Special form containers						
Fabricated	0	0	10	113,900	23	114,500
Shipped	0	0	3	800	16	2,300

3. Current Orders

Current orders for cesium-137 as sources or bulk powder are shown below:

Customer	Amount (Ci)	Estimated Shipping Date
Brookhaven National Laboratory	203,000	FY 1973
Lockheed Georgia Company	∿35,000	a
Radiochemical Centre, England	500	July 1972

[a]Sources are in storage awaiting receipt of customer's container.

An order is on hand from Atomic Energy of Canada Limited for about 112,000 Ci of cesium-137 as CsCl powder. The powder has been canned and stored awaiting release by the customer.

C. Strontium-90 Pilot Production (Production and Inventory Accounts)

1. Processing and Process Status

a. Product Preparation

Three batches of $^{90}Sr_2TiO_4$ totaling 125,000 Ci were processed. The strontium-90 process cell was then shut down for decontamination. Decontamination is necessary in order to replace the inner plate of the shielding window. During this entry, some equipment modification will be done to improve the strontium-90 process.

The annual physical inventory of strontium-90 is in progress. No additional strontium-90 processing is planned for FY 1972. The current strontium-90 process status is as follows:

Item	Strontium-90 (Ci)
In-process material	985,000
Strontium-90 products	354,000
Sources in fabrication	0
Returned SNAP sources[a]	504,000
Completed sources awaiting shipment	0

[a]Includes the 163,000-Ci SNAP-7D received in April.

b. Pellet Fabrication

One of the Sentinel-100 (100 W_e Teledyne source) liners loaded in March deformed during the first attempt to fuel the SN-100 source; the other liner had already been inserted. After inspection, measurement, and some attempts to reshape the liner had been done, it was defueled and a replacement was fabricated.

The weights of the four fractions of fuel recovered from the liner are listed below along with the pellet loading data in the same relative position; position 1 was at the bottom of the liner.

	Weight (g)		
Position	Original Pellet	Recovered Pieces	Difference
1	962	951	(-) 11
2	836	800	(-) 36
3	998	941	(-) 57
4	978	1078	(+) 100
	3774	3770	(-) 4

Although the defueling was done on a rush basis with only observational data, some information was obtained.

a. There was no evidence of pellet swelling to the point of pressure-contact with the liner walls. The fuel came out easily, without any necessity for digging, and the edge pieces were obviously curved. No diametrical measurement was possible. Also there was no evidence of interaction between pellets or between the fuel and the liner.

b. All pellets were broken when first observed.

c. The pellet surfaces, except for the top surface of the topmost pellet, showed red heat on first observation and did not cool appreciably until the pieces came out onto the tray.

The fractions were crushed for reuse; some of the fuel was used in the Sentinel-100 replacement liner and the remainder was stored.

Three 10.0-cm-diam pellets and one 10.2-cm-diam pellet were pressed and used to fuel another SN-100 liner. Significant pellet data are given below:

Pellet No.	Weight (g)	Height (cm)	Power (W)	Density (g/cm^3)	Power Density (W/cm^3)
SN-100-8	1020	3.2	297	4.05	1.18
SN-100-9	879	2.7	250	4.15	1.18
SN-100-2R	927	2.5	278	4.70	1.42
SN-100-3RR[a]	979	2.5	279	4.80	1.37
Total (av)	3705		1104	(4.30)	(1.28)

[a]10.2-cm-diam; others 10.0 cm.

All of the pellets were pressed under the same conditions, with pressings for 1 min to 3900 psi at 950, 1050, and 1150°C and a final 15-min pressing to 3900 psi at 1250°C; no holding pressure was used during the cooling cycle. Pellets SN-100-8 and SN-100-9 were made from fresh $^{90}Sr_2TiO_4$, while pellets SN-100-2R and SN-100-3RR were made from fuel recovered from the deformed liner. The higher densities of the latter two pellets is probably attributable to this "repressing"; similar effects have been observed previously. No problems were encountered, and the four pellets were loaded into the replacement liner without difficulty.

After the Sentinel-100 liner had been transferred out, pressing of a 6.7-cm-diam, 190-W pellet for use in the sources designated as URIPS-8 (formerly an Aerojet General Nuclear order) was begun. During this pressing, flame was seen at the graphite collar (top) of the hot-press, and it was shut down. Inspection of the furnace showed evidence of serious burning of the inner graphite susceptor sleeve and minor burning of the die body. Apparently, small cracks in the furnace shell allowed air to leak into the argon-blanketed area inside the furnace. The unit was disassembled and discarded. The cell was then remotely cleaned and opened for decontamination, preparatory to installing a new hot-press unit.

c. Review of Fuel Processing for the Isotopes Inc. Source (Sentinel-100)

The Sentinel-100 source is by far the largest strontium-90-fueled unit yet prepared. It has twice the wattage of the next largest (the experimental SNAP-23) and three times the wattage of the Sentinel-26-type sources. The Sentinel-25-type sources are the only large units which have been made in significant numbers. Since nearly all of the fuel used (94%) was made specifically for this unit and used immediately, the Sentinel-100 campaign represents an approximation of a steady-output operation (fuel processing — pellet fabrication — source encapsulation). The entire project, from the precipitation of the first

batch of $^{90}SrCO_3$ to the transfer of the replacement liner to the encapsulation facility, required 37 work-days of elapsed time. During this period, nine batches of $^{90}Sr_2TiO_4$ (a total of 345,000 Ci) were processed, and 15 pellets (representing approximately 650,000 Ci) were pressed.

Comparisons between the Sentinel-100 experience and what might be predicted for routine preparations of such units are difficult. Since this was a first-time operation, at least in scale, there was a period of "debugging" which would not be necessary once the proper system and procedures were established. Also the strontium-90 facilities were not in ideal condition. The most detrimental effect of the equipment status arose from the fact that the strontium-90 calcination furnace was not operating. This necessitated using the hot-press as a calcination furnace as well as for pellet pressing. In effect, this tripled the amount of hot-press operating time required. The necessity for changing several times from the pellet pressing configuration to the calcination configuration also had a delaying effect. Even under these less-than-optimum conditions, an overall product processing rate equivalent to 3.5 MCi/year and a pelletization rate equivalent to 6.5 MCi/year were demonstrated in the two-cell system. In the normal system (i.e., with an operational calcination furnace), the processing rate would be at least doubled and the pelletization rate more than tripled for the Sentinel-100 size pellets. Since the FPDL presently has three cells which could readily be set up for strontium-90 processing and two additional cells in which hot-presses could be used, a processing/pelletization rate in excess of 20 MCi/year would not be unrealistic for sources comparable to the Sentinel-100.

After some start-up problems (mostly equipment-related) an acceptable procedure for the pressing of the 10-cm-diam pellets was developed. The last ten pellets were made with no rejects. Fuel materials ranging from nearly nominal composition ($^{90}Sr_2TiO_4$) to compositions with about 20% excess TiO_2 were pressed with no detectable differences in pellet quality. This indicates that the expected low-density range of fuels intermediate between $^{90}Sr_2TiO_4$ and $^{90}SrTiO_3$ should not present a serious operational problem. Power densities up to about 1.4 W/cm^3 were obtained. However, the design power density of 1.2 W/cm^3 is still recommended to allow for some flexibility of operation.

The largest unanswered problem is the liner deformation. This is not a unique case, and some investigation is needed to determine the cause(s) and methods of prevention. Some work is presently being done on techniques for elimination of the liner, which in most cases is merely a handling device and not a critical member of the source assembly. In these cases, a method for fueling sources without liners would be useful. However, any multi-source campaign would almost certainly require the capability for interim storage of pellets, and something like a fueled liner would be required.

The Sentinel-100 source was successfully fabricated and shipped on schedule. Although some of the problem areas need work, fabrication of additional Sentinel-100 sources could be undertaken with confidence.

2. Operational Summary

Item	April 1972 No.	April 1972 Ci	CY 1972 No.	CY 1972 Ci	FY 1972 No.	FY 1972 Ci
HAPO shipments received	0	0	0	0	1	660,500
Product batches prepared	3	125,000	13	510,000	16	626,000
Sources						
Fabricated	1	328,400	5	360,000	6	409,600
Shipped	1	328,400	5	360,000	6	409,600
Special form containers						
Fabricated	0	0	0	0	0	0
Shipped	0	0	1	500	2	600

3. Current Orders

Current orders for strontium-90 as sources or bulk powder are shown below:

Customer	Amount (Ci)	Expected Shipping Date
U.S. Navy (ORNL)	208,000	June 1972
Lovelace Foundation	100	May 1972
University of California, Berkeley	10	May 1972

4. Source Fabrication

The welding of the Sentinel-100 strontium-90 heat source containing 328,000 Ci of strontium-90 (2200 W_{th}) was completed. The source was welded by electron-beam techniques, and the weld penetration was assured by means of untrasonic inspection. Following extensive leak testing, the source was loaded into a thermoelectric generator and shipped to the customer (Teledyne Isotopes). A "dummy" source containing lavite and tungsten as a substitute for the strontium fuel was also fabricated.

5. URIPS-8 Generators

The welding parameters for the Hastelloy C-276 URIPS-8 source capsules have been established. The welder was a Thermal-Dynamics, Model NX-190 plasma arc welder coupled with a Vickers Programmed Welder for a power supply. The welding parameters are:

Amperage	130 amps
Chamber pressure	16 in. H_2O
Rotating speed	12 in./min (50.4 sec/rev)
Orifice	3/32-in. diameter
Shield gas	Argon—4% hydrogen (10 ft^3/hr)
Plasma gas	Pure argon (1.8 ft^3/hr)

D. Short-Lived Fission Products Pilot Production (Production and Inventory Accounts)

Isotope	Number of Batches	Amount (Ci)
Neodymium-147	1	12
Praseodymium-143	1	4
Xenon-133	2	∿800
Iodine-131	1	45
Cerium-144	1	14

E. Promethium-147 Source Fabrication, Powder Shipments, and Current Orders

Donald W. Douglas Laboratories' order for 101,000 Ci of promethium-147 will be made in two shipments. Fifty thousand curies will be shipped in July, and the remaining 51,000 Ci will be shipped in November 1972.

SOURCE DEVELOPMENT - 08-01-04

A. Dose-Rate Measurements with Extrapolation Chamber

The beta radiation measurement study was continued. An additional beta source was fabricated and measured with the extrapolation chamber and thermoluminescent dosimeters. This source was fabricated by incorporating technetium-99 pertechnetate in a polyvinyl acetate sheet (4 × 4 × 0.030 in.). A 2- by 2-in. square was cut from the 4- by 4-in. sheet and measured on a 9- by 9-mm grid for uniformity using a 3-mm-diam collecting electrode in the extrapolation chamber. The maximum variation in the measurements (6.5%) occurred at the center position in the outside rows, as shown by the encircled values in Fig. 4.

Dose-rate measurements were made of the 2- by 2-in. square using the extrapolation chamber equipped with a 10-mm-diam collecting electrode. The results of this and subsequent measurements made as the source was reduced to a 1-3/4-in.-diam disk and then in 1/4-in.-diam increments to a 1/2-in.-diam disk are shown in Table 6. Thermoluminescent dosimeters were placed on the centers of the 2- by 2-in. square source, the 1-1/4-in.-diam disk source, and the 1/2-in.-diam disk source. The results of these measurements are also shown in Table 6.

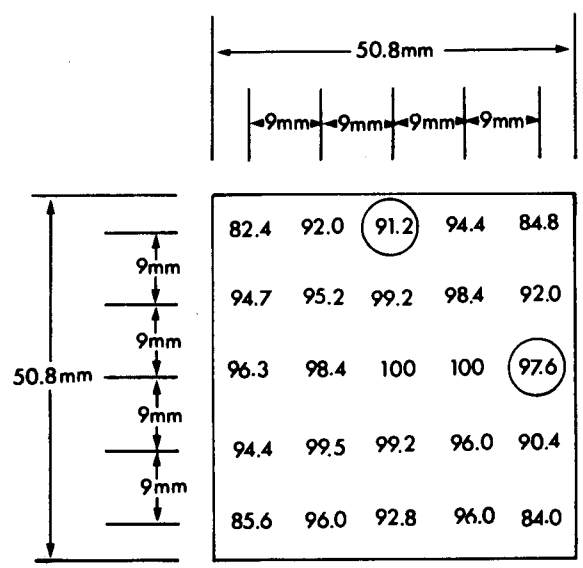

Fig. 4. Uniformity Measurement of Technetium-99 Source.

Table 6. Dose Rate and Source Size

Source Diameter (in.)	Dose Rate (rads/hr) 10-mm-diam Electrode	1-1/2-in.-diam Electrode	TLD
2 by 2 square	33.7		2.6
1-3/4	33.2		
1-1/2	32.6		
1-1/4	32.6		2.9
1	31.5		
3/4	29.8	33.2	
1/2	25.5	34.8	2.4
1/4	25.5	34.0	

Dose-rate measurements were made of the 3/4-in.-diam disk, the 1/2-in.-diam disk, and the 1/4-in.-diam disk, using the extrapolation chamber equipped with a 1-1/2-in.-diam (38.1-mm) collecting electrode. These results are also shown in Table 6 and Fig. 5 by the dotted line. The surface dose rate (33.7 rads/hr) as measured conventionally using the 10-mm-diam electrode (with the sensitive volume defined by the collecting electrode area) compares very favorably with an average value of 34.0 rads/hr measured with the large electrode in which the sensitive volume was defined by the source area.

The surface dose rate measured by the thermoluminescent dosimeters in the present experiment using technetium-99 is less than 10% of the value measured by the extrapolation chamber. In previous experiments in which a strontium-90—yttrium-90 source and a thallium-204 source were measured, the TLD measurement represented 25% of the value obtained with the extrapolation chamber. The TLD's were calibrated using a standardized cesium-137 gamma source. To achieve a high degree of accuracy it may be necessary to calibrate the TLD's using a standard beta source of the proper energy.

The results of these experiments and previously reported experiments show that the extrapolation chamber accurately measures the surface dose rate of a beta source if the source is approximately 2 in. in diameter. A decrease in the source diameter produces a decrease in the extrapolation chamber measurement, resulting in negative error in the surface dose-rate measurement. This relationship is shown in Fig. 6 in which the extrapolation chamber dose-rate measurements are plotted as percent of the surface dose rate for various source sizes and for the three beta energies studied (^{90}Sr-^{90}Y, ^{204}Tl, and ^{99}Tc). These curves provide the information required to calculate the surface dose rate from extrapolation chamber dose-rate measurements when using a 10-mm-diam collecting electrode. Similar corrections are also necessary for other collecting electrode sizes. In addition, this work has demonstrated the feasibility of determining accurately the surface dose rate (without correction) by using a collecting

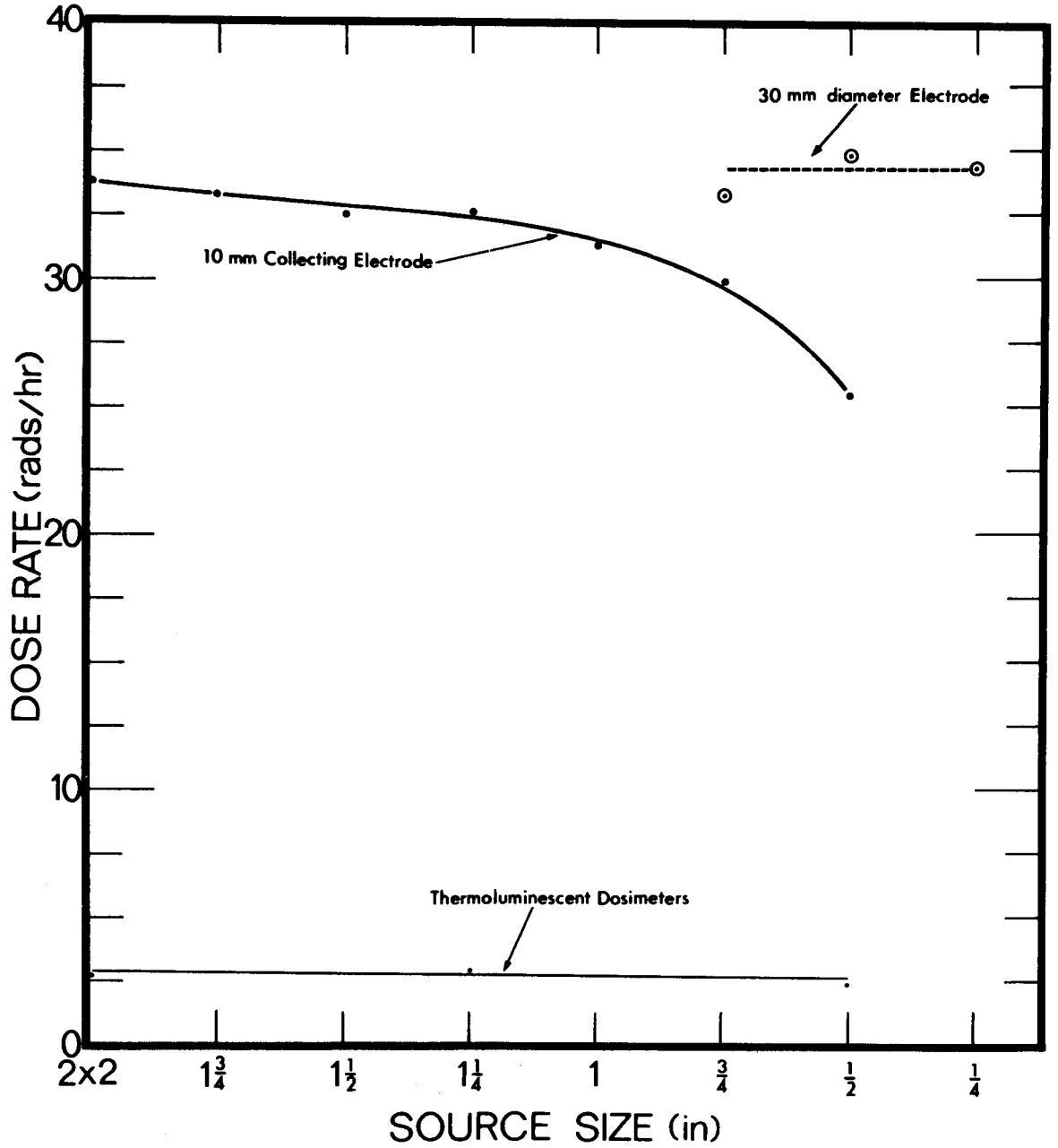

Fig. 5. Technetium-99 Source Size Versus Dose Rate.

electrode much larger than the source, with the cross section of the sensitive volume of the extrapolation chamber defined by the source area.

An addition to the equipment was made to provide a means of measuring the number of beta particles being emitted from the source per unit time. This addition consists of a large collecting electrode and source-supporting platform enclosed in a vacuum system. Preliminary tests are now being made on this equipment.

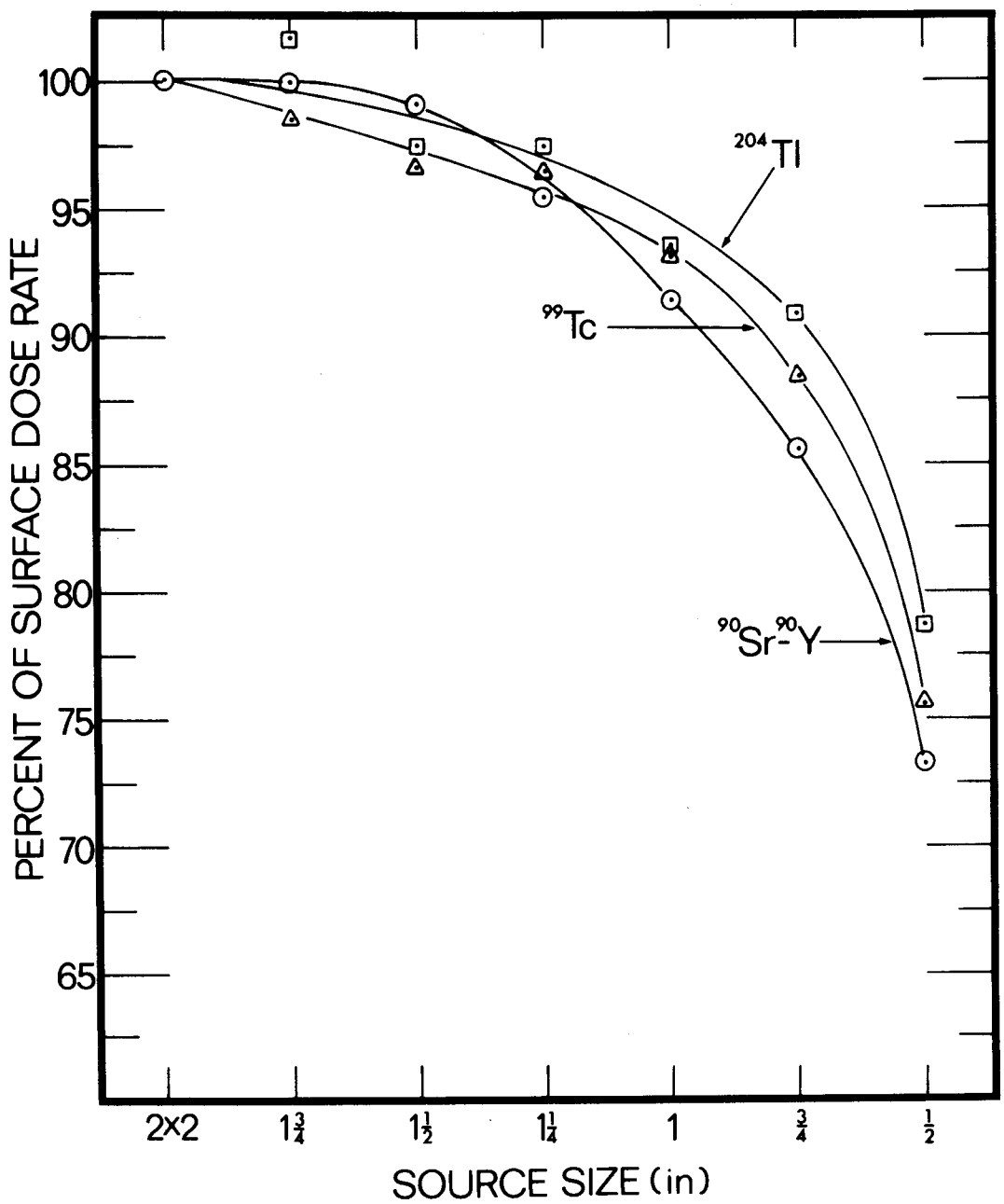

Fig. 6. Percent of Surface Dose Rate Measured by 10-mm-diam Collecting Electrode Versus Source Size.

Future work plans call for the measurements of beta flux as indicated above with surface dose-rate calculations based on these measurements. Additional work is planned to determine surface dose-rate dependence on source shape. Upon completion of the development of the measurement techniques, it will be possible to fabricate standard (beta) sources with precisely determined outputs which may be used for calibrating other measuring devices such as the TLD's mentioned above. A final report covering this work in detail is planned.

B. Strontium-90 Beta Sources

Two large flat-plate strontium-90 beta sources (40- by 50-cm active area each source) were fabricated. These sources are being shelf-tested for one week and will be sent to Brookhaven National Laboratory.

The radioactive matrix is 1/16-in.-thick porous graphite into which a weak nitric acid solution containing strontium-90 was homogeneously absorbed. The solution was evaporated, and the $^{90}Sr(NO_3)_2$ was decomposed by heating.

In this manner, the amount of strontium-90 can be carefully controlled to produce a source containing 2.0 mCi per square centimeter area.

To minimize the production of high-energy bremsstrahlung, the source was constructed of aluminum and graphite. The window thickness is 0.012 in. of aluminum. The face of the source is covered with 1/2-in. aluminum plate, which is actually a shutter and can be moved to the side when the source is in use.

The source backing is 1/2-in. aluminum, and the total weight of each source assembly is less than 50 lb. Two such sources, placed facing each other, furnish a field of high-energy beta radiation that will vary with the distance between the sources. At a distance of 10 cm from the face of each source, the beta radiation dose rate has been calculated to be approximately 5000 rads/hr.

At the surface of the closed source assembly, the bremsstrahlung radiation measures 500 mr/hr and diminishes to 100 mr/hr at a distance of 12 to 14 in.

C. Aluminum Foil Krypton-85 Sources

Krypton-85 ions accelerated by a high voltage electric field will be implanted deeply in an aluminum foil and remain trapped within the metal to form a good source of beta and gamma radiation. Such foils can be cut to any size and can be formed into such shapes as cups or trays.

A vacuum system and a 10,000-V AC power supply were constructed to bombard aluminum foils with krypton ions from a glow discharge. The system did not reach a low enough pressure to permit high voltage to be maintained across the electrodes, and the first foil was bombarded with only 500-V ions. Normal fission krypton was implanted in a 3/4-in.-diam foil disk. The count rate was 43,000 counts/min shortly after bombardment, but it decayed to 23,000 counts/min in one month. The count rate held substantially constant for the next 15 days. This loss of krypton was probably due to the shallow depth of penetration attained by the low-energy ions.

The vacuum system and electrode arrangement have been improved so that up to 5,000 V can now be maintained. Foils will be made by bombarding at these higher voltages to determine if the krypton will remain trapped

in the metal at greater penetration depths, and enriched krypton will be used to increase the activity per unit area of the foil.

D. Radioisotope Safety

1. Tritium Loss From Wrist Watches

A study is being made of the amounts of tritium released from commercial wrist watches. Three watches each from two manufacturers are being tested. The tritium is incorporated as the activator in the self-luminous ZnS paints which are applied to the watch dials and hands. The tritium is evolved as tritium oxide or elemental tritium. The likely mechanisms of tritium release are leakage through openings in the watches which are not tightly sealed and by diffusion through the plastic crystals. The watches from one of the manufacturers (identified as W-H-275) had each of the 12 numerals painted, whereas the watches from the other manufacturer (identified as W-H-274) did not have painted numerals, but had a small dot of paint near each of the 12 numerals. The hands of both types of watches were painted. It was estimated that the watches identified as W-H-275 had about 60 times more painted area than those of the watches identified as W-H-274.

For testing, the three watches of each type were placed in two Pyrex containers which were sealed at both ends with Pyrex valves. The atmosphere throughout all of the tests was dry air. The tritium evolved from the watches was periodically flushed from the sealed containers into a tritium recovery train and then analyzed by liquid scintillation counting. Preliminary data obtained during five sampling periods totaling 104 days gave an average loss of 0.019 μCi/day per watch (W-H-275), and over 81 days an average loss of 0.102 μCi/day per watch (W-H-274). Ninety-five to ninety-nine percent of the loss was in the form of tritium oxide. It was expected that the W-H-275 watches would have the highest loss due to the relatively large exposed surface of the paint. Further studies are planned to determine the cause of this difference in loss rates between the two brands of watches. Also, the loss rates will be determined at a higher temperature (approximately 98°F), which is near the likely maximum temperature that wrist watches are subjected to in normal use.

2. Tritium Loss from Self-Luminous Paints

A study has been started to determine the tritium loss from commercial tritium-activated phosphor paints. Eleven paints (including unmixed pigment and binder) were purchased from five foreign and two domestic suppliers. Paint samples for testing were mixed according to the manufacturers' instructions using equal weights of binder and pigment. The paint was applied to a 0.5-in.-diam countersunk surface on aluminum strips in order to prevent damaging the paint surfaces during storage and testing. Each test sample contained 50 ± 1 mg of pigments (ZnS phosphor and tritiated compound). The samples were cured at room temperature for 12-16 days before being tested.

In the initial testing, one sample of each of the 11 paints was subjected to a series of five 24-hr water-leach tests during a 26-day period. The preliminary results for tritium loss to the leach water for each of the tests is given in Table 7, along with the manufacturer's stated activity concentration and the amount of activity in each paint sample (based on the manufacturer's data). The results show that for any given paint, the tritium loss in each succeeding test is generally lower during the first two or three leach tests and that the losses in the remaining tests are nearly constant. This behavior of unsealed tritium sources is normal, and it probably consists of an initially high loss due to loosely held tritium on the source surfaces followed by a more stable period in which the loss is limited by the rate at which tritium can permeate from the interior of the source to the source surface. All eleven of the paints had losses which were considerably less than that permitted by USAEC regulations (5% of the initial activity).

Tests are also being made to determine the amount of tritium released from dry pigment, mixed paint during curing, and mixed paint after curing.

Table 7. Tritium Losses in 24-Hr Water Leach Tests

Paint No.	Mfg's Activity (mCi/g)	Sample Activity (mCi)	Tritium Loss on Dates Tested (% of Initial)[a]				
			1/25/72	2/2/72	2/8/72	2/15/72	2/22/72
W-H-276	200	10.0	0.12	0.07	0.06	0.06	0.07
W-H-277	240	12.2	0.15	0.15	0.12	0.10	0.10
W-H-278	450	22.5	0.16	0.12	0.07	0.07	0.07
W-H-279	550	27.5	0.17	0.10	0.07	0.07	0.07
W-H-280	150	7.5	0.24	0.19	0.11	0.09	0.12
W-H-281	300	15.0	0.57	0.36	0.26	0.23	0.24
W-H-282	500	25.0	0.28	0.16	0.13	0.13	0.14
W-H-283	222	11.1	0.26	0.14	0.13	0.12	0.13
W-H-284	370	18.5	0.71	0.29	0.25	0.22	0.20
W-H-285	100[b]	5.0	0.63	0.27	0.16	0.15	0.13
W-H-286	200[b]	10.0	0.94	0.42	0.20	0.19	0.18

[a]Percent of initial activity in the sample based on manufacturer's stated activity per gram.
[b]Not given by manufacturer, but presumed from manufacturer's sales information.

E. Krypton-85 Source for NaK Flow Measurement

Preliminary investigative work has begun on designing a neutrally buoyant krypton-85 source for measuring the flow rate of NaK in a magnetically pumped liquid metal loop. Preliminary calculations indicate that the source will be a right circular cylinder 0.511 in. in diameter by 0.511 in. long with a wall thickness of 0.010 in. The source will contain 450-500 mCi of krypton-85.

F. Radioisotope Characterization, Quality Control, and Standards

1. Radioisotope Characterization

The information gathering function of this program furnishes essential data for use by ORNL people, by AEC personnel in isotopes, regulatory, and biomedical fields, and by other AEC contractors as well as by national organizations such as ASTM, NBS, and ANS. At the request of local Health Physics personnel, suggestions were made with regard to decay schemes for calculations of dose rates to be included in a revision of an ICRP handbook. One of the people engaged in preparation of the "GE Chart" sent information that our half-life values are being used and that agreement with their adoptions is good. He offered a copy of a table of cross sections and resonance integrals, in advance of formal publication. An inquiry was answered with regard to measurement of film thickness by alpha absorption.

2. Radioisotope Special Analysis and Quality Control

Local measurements of NBS standards of cobalt-57 and cesium-137 were 1.1 and 2.2% above the NBS values, which were certified to 1.0 and 1.3%, respectively. In preparation for a proposed "round robin" on gallium-67 measurement, a high-quality product (from an enriched target) was extensively measured, by Ge(Li) and NaI(Tl) spectrometry and by 4π ionization chamber. Local results agreed very well with each other and were 6% lower than those of ORAU, considered adequate. Some of our assay and quality-control procedures, plus those used by other countries and by IAEA, were summarized in a report.[5] A review was made of properties and analytical methods for plutonium-236 in part as a result of an inquiry. For measurement of plutonium-238 in neptunium-237 used for targets alpha spectrometry was recommended for levels below 1 ppm. The varied inquires answered this month were concerned with calibration for phosphorus-32 in biological samples, "standard methods" for gamma activity and gamma dosimetry, measurement of curie-level sodium-24 sources, methods for radionuclides in environmental samples (including standards), and dissolving stannic oxide.

G. Radiation Processing (Not Supported by 08 Program; WFO Account)

1. Radiation-Enhanced Oxidation of Chicken Processing Plant and Tannery Plant Effluents

Pollution of rivers and waterways by waste effluent from various industrial plants is a serious problem. Past work has shown that radiation-enhanced oxidation of plant effluents containing organic constituents such as dyes, pesticides, and other organic chemicals may be a practical method of organic chemical destruction. The purpose of this investigation

---

[5] *Radioisotope Production and Quality Control*, STI/DOC/10/128, IAEA Vienna (1971).

is to develop and demonstrate an economically feasible method of radiation-enhanced oxidation of waste solutions from chicken processing plants and tannery plants. A cobalt-60 radiation source is being used to irradiate the waste effluent under a 500-psi oxygen atmosphere while the effluent is in contact with a charcoal bed.

Twenty-five gallons of each of two types of effluent from a chicken processing plant was mixed to provide a representative sample from the plant. The scalder effluent was a dark brown color compared with the lighter brown colored effluent which was derived from cleaning chicken carcasses. Chlorine (100 ppm) as NaOCl was added to reduce the rate of putrefaction of the mixture. Aluminum sulfate (600 ppm) was added along with powdered agricultural limestone to carry the protein contaminants down with the precipitate. The precipitate was removed by filtering the solution through a medium sintered polyethylene immersion filter. It was determined that not all of the aluminum had precipitated, and $Ca(OH)_2$ was added to raise the pH to 12.9 before carbon dioxide was added to precipitate the excess calcium and lower the pH to 7.5. The CO_2-treated effluent was filtered and used as feed for the radiation-enhanced oxidation experiment. The chemical processing had reduced the COD from 2700 to 645 mg/liter.

Prior to this month's irradiation experiments, the charcoal column of the dynamic irradiation system described in the January 1972 report[6] was cleaned by radiation-enhanced oxidation using a 3-gal/hr water wash under 500 psi oxygen. The COD of the water wash from the system was 20 mg/liter. The chemically pretreated chicken waste effluent was then treated in this system by radiation-enhanced oxidation using a 3-gal/hr flow under 500 psi oxygen. The results are shown in Table 8.

The COD of the chemically pretreated effluent was 645 and was reduced to about 200 mg/liter after 45 gal of the waste effluent had been treated by radiation-enhanced oxidation. Since there was a gradual rise in COD up to the end (45 gal), it was assumed that the COD would continue to rise until an equilibrium was established such that the rate of destruction of the waste products on the charcoal is equal to the rate the material is deposited on the charcoal.

The remaining 25 gal of scalder waste and 25 gal of processing waste from the chicken processing plant were combined and treated with 1 lb of $Ca(OH)_2$, and the solution was filtered to remove the precipitate. Carbon dioxide was added to precipitate the remaining calcium as $CaCO_3$, and the pH dropped to 7.5 but was raised again to 8.7 with NH_4OH. The $CaCO_3$ was removed by filtration. This waste was used without further treatment in the following experiment.

---

[6]A. F. Rupp, *Radioisotope Program (8000) Progress Report for January 1972*, ORNL-TM-3708, Oak Ridge National Laboratory.

Table 8. COD Reduction of a Mixture of Scalder Waste and Processing Waste from a Chicken Processing Plant by Gamma Radiation Treatment of the Waste on a Charcoal Column Under 500-psi Oxygen in the 5×10^5 R Radiation Field

Sample	Amount Through (gal)	Flow Rate[a] (gal/hr)	COD (mg/liter)
Scalder waste			2980
Processing waste			2420
Waste after chemical pretreatment			645
1	3	3	37
2	6	3	83
3	9	3	119[b]
4	12	3	155
5	15	3	159
6	18	3	164
7	21	3	147
9	27	3	180
10	30	3	178
11	33	3	160
12	36	3	174
13	39	3	210
14	42	3	215
15	45	3	192

[a]Equivalent to an exposure dose to the flowing solution of approximately 1.6×10^5 R.
[b]When clay was added and the solution Millipore filtered to remove the cloudiness, the COD was reduced to 86 mg/liter.

The irradiation column was washed with 4 to 5 gal of process water before beginning the experiment, and the above described effluent was processed in the irradiation treatment equipment under 500-psi oxygen and at a lower radiation dose rate of 2.5×10^5 R/hr. Results are shown in Table 9. The COD was lowered from 549 to about 160 after 9 gal had been processed. When the radiation source was removed, the COD rose to 196 after 6 gal of waste had been treated under oxygen at 500-psi only. A longer experiment would have been desirable.

Table 9. COD Reduction of a Mixture of Scalder Waste and Processing Waste from a Chicken Processing Plant by Gamma Radiation Treatment of the Waste on a Charcoal Column Under 500-psi Oxygen in a 2.5×10^5 R/hr Radiation Field

Sample	Amount Through (gal)	Flow Rate (gal/hr)	COD (mg/liter)	Other Conditions
Starting			549	
1	3	3	169	Oxygen and radiation
2	6	3	160	Oxygen and radiation
3	9	3	155	Oxygen and radiation
4	12	3	192	Oxygen alone
5	15	3	196	Oxygen alone

Since part of the charcoal column near the end of the column lies out of the radiation field and is subject to bacterial growth, the large irradiator could not be used to prove bacterial decontamination of the waste effluent.

Infrared spectral studies were made on the solid materials present in the untreated chicken process waste effluent. Both solutions were taken to dryness to obtain solids for dispersion in KBr pellets for use in the infrared spectrometer. The dark material (scalder waste) was found to contain a primary amine. Since the primary amine absorption peaks are strong and wide compared with weak peaks in the same area for secondary amines, it is not possible by the infrared spectra to determine whether secondary amines are present. This waste probably contains proteins and the degradation products of the protein. The light-colored material contained aliphatic amines and esters. The amines were probably proteins and the degradation products from the protein and the esters were probably the glycerol and a long chain aliphatic acid. No aromatic compounds were found.

The material before the irradiation treatment contained a fraction which was soluble in acetone. The acetone-extracted phase was found to contain long-chain aliphatic acid. About 100 ml of each of the chemically treated liquors and the radiation-enhanced oxidization waste solution was evaporated to dryness to obtain solids to make KBr pellets for infrared spectra.

The infrared spectra of the irradiated effluent showed it to contain a long-chain aliphatic ester, an alcohol group (OH), a primary amine, and an amide. The amide probably was produced by oxidation of the primary aliphatic amine or perhaps from the ammonium compound with the aliphatic acid. The glycerol ester of the fatty acid had been partially hydrolyzed to yield both the OH group and a long-chain aliphatic ester.

Effort next month will be concentrated on the chicken processing waste as only a small amount of the scalder waste is produced. Since there is a possiblity that the organic material from this chicken waste may be used as a livestock feed, effort will be made to minimize the inorganic material added.

RADIOISOTOPE SALES

ITEMS OF INTEREST

A request for quotation was received from International Atomic Energy Agency for 500 mCi phosphorus-33 per month for 6 months. A request for quotation was received from International Nutronics, Inc., for approximately one million curies of cesium-137 contained in about 35 sources. An order was received from Oak Ridge Associated Universities for 4500 mCi of gallium-67 to be shipped at the rate of 100 mCi/week. An order was received from Radiochemical Centre, England, for 15,000 Ci of tritium to be shipped in May 1972.

Shipments made during April that may be of interest are listed below:

Customer	Isotope	Amount
Large Quantities		
Teledyne Isotopes (U.S. Navy)	Strontium-90	328,000 Ci
E. I. duPont de Nemours & Company, Inc.	Iodine-129	1,000 mg
New England Nuclear	Tritium	3,000 Ci
Schwarz BioResearch, Inc.	Tritium	1,001 Ci
Radiochemical Centre, England	Tritium	15,000 Ci
International Chemical & Nuclear Corp.	Tritium	1,000 Ci
Canrad Precision Industries	Tritium	1,000 Ci
National Bureau of Standards	Tritium	1,001 Ci
Withdrawn Items		
Mayo Clinic	Copper-67	4 lots
University of Chicago	Copper-67	1 lot
University of Rochester	Iodine-131, FP	275 mCi
University of Pittsburgh	Iodine-131, FP	50 mCi
Cleveland Metropolitan General Hospital	Iodine-131, FP	50 mCi
Items Shipped for Use in Cooperative Programs		
Oak Ridge Associated Universities	Gallium-67	
University of Southern California	Platinum-195m	
Unusual Items Supplied		
Lawrence Berkeley Laboratory	Two HFIR-irradiated tungsten-180 samples	

A summary of the radioisotopes shipped in March 1972 is given in Table 10.

Table 10. Summary of Radioisotopes Shipped During March 1972

Isotopes	No. of Shipments	Amount (mCi)
Calcium-47	8	6.5
Cerium-144	2	2,000
Cesium-137	4	2,469,000
Cobalt-60	1	25
Europium-152-154	1	5
Iodine-129	3	1,901 mg
Iodine-131	3	375
Krypton-85, normal	12	328,000
Niobium-95	4	8
Phosphorus-33	4	202
Promethium-147	22	1,200,050
Ruthenium-103	2	12
Ruthenium-106	3	13
Strontium-89	4	17
Technetium-99	1	100
Tritium	11	30,532,500
Xenon-133	62	64,412
Experimental products	41	
Service irradiations		
Cyclotron	7	
Reactor	1	
	196	34,596,625.5 2,021 mg

The radioisotopes sales proceeds and shipments for the first 9 months of FY 1971 and FY 1972 are given in Table 11.

Table 11. Radioisotope Sales and Shipments

Item	7-1-70 thru 3-31-71	7-1-71 thru 3-31-72
Inventory items	$437,232	$325,743
Major products	96,103	47,900
Radioisotope services	221,249	223,807
Cyclotron irradiations	93,153	103,250
Miscellaneous processed materials	49,823	46,627
Packing and shipping	63,917	54,230
Total	$971,477	$801,557
Number of radioisotope shipments	2,403	1,844

ADMINISTRATIVE

Visitors to the IDC and travel by IDC personnel are given in Tables 12 and 13.

Table 12. IDC Visitors

Visitors (affiliation)	Subject Discussed
International Purification System	Chicken processing plant effluent
Corps of Engineers	Training personnel for simplified sand survey system
National Council for Air and Stream Improvement	Processing of pulp and paper waste effluent
General Electric Company	Isotopic power
Graduate School of Public Health University of Cincinnati	Isotope production and the use of radioisotopes in environmental problems

Table 13. Travel of IDC Personnel

Site Visited	Purpose of Visit
Point Mugu, California	Conduct sand tracing experiment
West Georgia College	Traveling lecture program
Westinghouse	Inspect surplus equipment
Wilmington, Delaware	Attend National Standards Institute working session on leak testing

PUBLICATIONS

JOURNALS

J. Lange, J. H. Hamilton, K. Baker, A. V. Ramayya, L. Varnell, and J. J. Pinajian, "M1-Admixtures in Collective Transitions in ^{166}Er," *Bull. Am. Phys. Soc.* 17, 558 (1972).

A. C. Rester, B. van Nooijen, P. Spilling, J. Konijn, and J. J. Pinajian, "Inelastic Scattering of 18-MeV α-Particles and 13-MeV Protons from Levels in ^{84}Sr," *Bull. Am. Phys. Soc.* 17, 561 (1972).

REPORTS

J. R. DiStefano and K. H. Lin, *Compatibility of Curium Oxide with Refractory Metals at 1650°C and 1850°C*, ORNL-4773, Oak Ridge National Laboratory (April 1972).

E. Lamb, *Isotopic Power Fuels Monthly Status Report for March 1972*, ORNL-TM-3796, Oak Ridge National Laboratory.

A. F. Rupp, *Radioisotope Program (8000) Progress Report for March 1972*, ORNL-TM-3789, Oak Ridge National Laboratory.

PAPERS PRESENTED

J. Lange, J. H. Hamilton, K. Baker, A. V. Ramayya, L. Varnell, and J. J. Pinajian, "M1-Admixture in Collective Transitions in ^{166}Er," presented at *1972 Spring Meeting of the American Physical Society in Washington, D.C., April 24-27, 1972.*

A. C. Rester, B. van Nooijen, P. Spilling, J. Konijn, and J. J. Pinajian, "Inelastic Scattering of 18-MeV α-Particles and 13-MeV Protons from Levels in ^{84}Sr," presented at *1972 Spring Meeting of American Physical Society in Washington, D.C., April 24-27, 1972.*

TRANSLATION

Mario Uhl, "Measurement of γ-γ Directional Correlation of the 426-404 keV Cascade of ^{211}Pb Decay," *Nucl. Phys.* 51, 667-672 (1964), ORNL-tr-2600 (1972), translated by J. J. Pinajian.

INTERNAL DISTRIBUTION

1. M. A. Baker
2. P. S. Baker
3. E. E. Beauchamp
4. G. E. Boyd
5-7. T. A. Butler
8. F. N. Case
9. W. R. Casto
10. J. A. Cox
11. F. L. Culler
12. W. C. Davis
13. J. S. Drury
14. J. H. Gillette
15. H. R. Gwinn
16. R. F. Hibbs
17. K. E. Jamison
18. Lynda Kern
19. E. H. Kobisk
20. E. Lamb
21. R. E. Leuze
22. J. L. Liverman
23. L. O. Love
24. W. S. Lyon
25. R. E. McHenry
26. H. H. Nichol
27. W. W. Parkinson
28. J. J. Pinajian
29. M. E. Ramsey
30. S. A. Reynolds
31-32. R. A. Robinson
33. D. A. Ross
34. A. F. Rupp
35. R. W. Schaich
36. A. H. Snell
37. K. A. Spainhour
38. M. R. Skidmore
39-40. H. F. Stringfield
41. D. B. Trauger
42. A. M. Weinberg
43. J. C. White
44-45. Central Research Library
46. Document Reference Section
47-51. Laboratory Records Department
52. Laboratory Records - RC

EXTERNAL DISTRIBUTION

53. G. A. Andrews, ORAU, Medical Division, Oak Ridge, Tennessee
54. H. L. Atkins, Brookhaven National Laboratory, Upton, New York
55. D. S. Ballantine, AEC, Washington, D. C.
56-59. R. F. Barker, AEC, Washington, D. C.
60. N. F. Barr, AEC, Washington, D. C.
61. O. M. Bizzell, AEC, Washington, D. C.
62. G. Borscheim, ARHCO, Richland, Washington
63. C. R. Buchanan, AEC, Washington, D. C.
64. R. L. Butenhoff, AEC, Washington, D. C.
65. T. D. Chikalla, PNL, Richland, Washington
66. D. F. Cope, AEC Site Representative, ORNL
67. J. C. Dempsey, AEC, Washington, D. C.
68. W. K. Eister, AEC, Washington, D. C.
69. E. E. Fowler, AEC, Washington, D. C.
70. J. D. Goldstein, AEC, Washington, D. C.
71. A. Gottschalk, Argonne Cancer Research Hospital, Chicago, Illinois
72. F. D. Haines, AEC, Washington, D. C.
73. W. D. Holloman, AEC, Washington, D. C.
74. J. W. Irvine, MIT (Consultant)
75-77. J. H. Jarrett, PNL, Richland, Washington
78. D. K. Jones, AEC, Richland, Washington
79. J. Lawrence, Lawrence Berkeley Laboratory, Berkeley, California
80. J. E. Machurek, AEC, Washington, D. C.
81. J. N. Maddox, AEC, Washington, D. C.
82. J. C. Malaro, AEC, Washington, D. C.

83. W. E. Mott, AEC, Washington, D. C.
84. H. A. O'Brien, LASL, Los Alamos, New Mexico
85. G. J. Rotariu, AEC, Washington, D. C.
86. W. D. Sandberg, AEC, Aiken, South Carolina
87. R. W. Shivers, AEC, Washington, D. C.
88. F. J. Skozen (Krizek), Argonne Cancer Research Hospital, Chicago
89. L. G. Stang, Jr., BNL, New York
90-95. D. H. Turno, SRL, Aiken, South Carolina
96. A. R. Van Dyken, AEC, Washington, D. C.
97. Research and Technical Support Division
98-99. Technical Information Center