LOCKHEED MARTIN ENERGY RESEARCH LIBRARIES
3 4456 0515052 8

cy. 115

ORNL-4749
UC-4 — Chemistry

ANALYTICAL CHEMISTRY DIVISION

ANNUAL PROGRESS REPORT

FOR PERIOD ENDING SEPTEMBER 30, 1971

OAK RIDGE NATIONAL LABORATORY
CENTRAL RESEARCH LIBRARY
DOCUMENT COLLECTION
LIBRARY LOAN COPY
DO NOT TRANSFER TO ANOTHER PERSON
If you wish someone else to see this
document, send in name with document
and the library will arrange a loan.

OCN-7963
13 3-671

OAK RIDGE NATIONAL LABORATORY
operated by
UNION CARBIDE CORPORATION
for the
U.S. ATOMIC ENERGY COMMISSION

Printed in the United States of America. Available from
National Technical Information Service
U.S. Department of Commerce
5285 Port Royal Road, Springfield, Virginia 22151
Price: Printed Copy $3.00; Microfiche $0.95

This report was prepared as an account of work sponsored by the United States Government. Neither the United States nor the United States Atomic Energy Commission, nor any of their employees, nor any of their contractors, subcontractors, or their employees, makes any warranty, express or implied, or assumes any legal liability or responsibility for the accuracy, completeness or usefulness of any information, apparatus, product or process disclosed, or represents that its use would not infringe privately owned rights.

ORNL-4749
UC-4 — Chemistry

Contract No. W-7405-eng-26

ANALYTICAL CHEMISTRY DIVISION
ANNUAL PROGRESS REPORT
For Period Ending September 30, 1971

M. T. Kelley, Director
J. C. White, Associate Director

Compiled and Edited by
W. S. Lyon

Assisted by
W. J. Ross

JANUARY 1972

OAK RIDGE NATIONAL LABORATORY
Oak Ridge, Tennessee 37830
operated by
UNION CARBIDE CORPORATION
for the
U.S. ATOMIC ENERGY COMMISSION

LOCKHEED MARTIN ENERGY RESEARCH LIBRARIES
3 4456 0515052 8

Reports previously issued in this series are as follows:

ORNL-686	Period Ending March 31, 1950
ORNL-788	Period Ending June 30, 1950
ORNL-867	Period Ending October 10, 1950
ORNL-955	Period Ending January 10, 1951
ORNL-1088	Period Ending March 26, 1951
ORNL-1113	Period Ending June 26, 1951
ORNL-1129	Period Ending September 10, 1951
ORNL-1233	Period Ending December 26, 1951
ORNL-1276	Period Ending March 26, 1952
ORNL-1361	Period Ending June 26, 1952
ORNL-1423	Period Ending September 26, 1952
ORNL-1474	Period Ending January 10, 1953
ORNL-1547	Period Ending April 20, 1953
ORNL-1639	Period Ending October 20, 1953
ORNL-1717	Period Ending April 20, 1954
ORNL-1788	Period Ending October 20, 1954
ORNL-1880	Period Ending April 20, 1955
ORNL-1973	Period Ending October 20, 1955
ORNL-2070	Period Ending April 20, 1956
ORNL-2218	Period Ending December 31, 1956
ORNL-2453	Period Ending December 31, 1957
ORNL-2662	Period Ending December 31, 1958
ORNL-2866	Period Ending December 31, 1959
ORNL-3060	Period Ending December 31, 1960
ORNL-3243	Period Ending December 31, 1961
ORNL-3397	Period Ending December 31, 1962
ORNL-3537	Period Ending November 15, 1963
ORNL-3750	Period Ending November 15, 1964
ORNL-3889	Period Ending November 15, 1965
ORNL-4039	Period Ending October 31, 1966
ORNL-4196	Period Ending October 31, 1967
ORNL-4343	Period Ending September 30, 1968
ORNL-4466	Period Ending October 31, 1969
ORNL-4636	Period Ending September 30, 1970

Contents

Preface vii

Summary ix

PART A. ANALYTICAL RESEARCH AND DEVELOPMENT

1. Analytical Methodology 1
   - Environmental Activities 1
     - Electrochemical Monitors for Air Pollutants 1
     - Environmental Applications of the GeMSAEC Photometric Analyzer 2
     - Hydrogenation – Gas Chromatography (GC) System for Determining P, N, S, and C 2
     - Gas Chromatography of Aqueous Solutions: Inorganic Anions 3
     - Extraction and Subsequent GC Determination of Organomercurial Salts 3
     - Multiwavelength Flame-Photometric Detector 4
     - Water Laboratory 4
     - Participation in ORNL-NSF Environmental Program 4
     - Detailed Environmental Statements 4
   - Tobacco Smoke Analysis Program 5
     - Particulate Matter 5
     - Gas Phase 5
     - Smoke Condensates 6
     - Marijuana Smoke 6
     - Research and Development Activities 6
   - Cigarette Smoke Inhalation Methodology Project 7
   - Analytical Research and Support Activities in the Transuranium Research Laboratory (TRL) 7
     - Redox Chemistry of Actinides in Phosphoric Acid 7
     - Investigation of Divalent Actinides 8
     - Spectral and Potential Studies of Berkelium 8
     - Coulometric Titrations with the Conducting Glass (SnO_2) Electrode 8
     - Coulometric Titrimetry with Feedback-Controlled Electrolysis Current 9
     - Analytical Support in TRL 9

2. Reactor Projects 10
   - Analytical Developments for the Molten-Salt Reactor Program 10
     - In-Line Chemical Analysis of Molten Fluoride Salt Streams 10
     - Slotted Probe for In-Line Spectral Measurements 11
     - In-Line Determination of Hydrolysis Products in $NaBF_4$ Cover Gas 12
     - Analytical Studies of $NaBF_4$ Coolant Salt 13
     - Spectrophotometric Study of Protonated Species in $NaBF_4$ 13
     - Voltammetric and Electrolysis Studies of Hydroxide Ion in Molten $NaBF_4$ 15
     - Electroanalytical Studies in the $NaBF_4$ Coolant Salt 16
     - Spectral Studies in Molten $NaBF_4$ 16

Analytical Research in Other Molten Fluoride Solvents 17
Reference Electrode for Fluoride Melts 17
Electroanalytical Studies of Ni(II) in Molten Fluoride Fuel Solvent 17
Spectral Studies in Molten Fluoride Media 18

Analysis of Natural Gas Samples 18

3. Analytical Biochemistry 19

Biological Macromolecular Separations Technology Project 19
Optimization of tRNA Assay Conditions 19
Gel Electrophoresis of Ribonucleic Acids 19
Analysis of Histones 19

Molecular Anatomy (MAN) Program 20
Biochemical Separation Systems Development 20
Analytical Electrophoresis Laboratory 20
GeMSAEC Fast Analyzer Development 20
Miniature GeMSAEC Fast Analyzer 21
Isopycnometric Serology 22
Prenatal Detection of Human Genetic Disorders 22

Biochemistry of Human Variants Group 23
Metabolic Defects Screening Program 23

Characterization and Purity of Biochemical Compounds 23

4. Nuclear and Radiochemistry 25

Trace Element Determinations in Biological and Environmental Samples 25
Trace Element Profiles through a Coal-Fired Steam Plant 25
Mercury and Cadmium 26
Wet-Ashing Organic Matter for the Determination of Mercury by Atomic Absorption 27
Assessment of Human Exposure to Environmental Mercury and Other Minerals 27

Sensitivities and Thermal Effects in Proton-Reaction Analysis of Biological Samples for ^{12}C, ^{13}C, and ^{15}N 27

Effects of Radiation on Analytical Methods 29
Colorimetric Determination of Iron 30
Effect of Gamma Radiation on the Ni-dimethylglyoxime Method 30

Nuclear Safety Support Program 30
Radiolytic Hydrogen Control 30
Evolution of Hydrogen from Reactor Containment Coatings 30

Cerenkov Counting and Phosphor Screens 31

Low-Level Gamma-Ray Spectrometry of Returned Lunar Samples 33
Completion of Measurements on Apollo 12 Returned Lunar Samples 33
Studies on Samples from the Apollo 14 Mission 33
K, Th, and U Concentrations and Cosmogenic Radionuclide Abundances in Two Soils from Apollo 15: Preliminary Information 33

Cooperative Isotopes Program 34

New Facilities and Equipment 35
Systematic Survey of Photon-Activation Sensitivities at the ORELA 35
Self-Loading Tritium Targets for 14-MeV Neutron Production 36
High-Flux Activation Analysis Laboratory 37
Compilation of Nuclear Data for Ge(Li) Gamma Spectrometry and Computer-Controlled Data-Acquisition System 37

Cooperative Radiochemical Studies 38
Fission Products in HTGR Coolant Circuits 38
Applied Gamma Spectrometry 38
Separations and Activation Analysis 38

5. Analytical Instrumentation 40

Computer Analytical Systems 40
FOCAL Systems for the GeMSAEC and Other Analytical Instruments 40
Program and Data Storage 41
Programming for the ND-812 42
PDP-8/I Programming 42
Computer-Electrochemical Systems 42
Peripheral Equipment 42

Instrumentation Research and Development 43
Automatic, Controlled-Current, Coulometric Karl Fischer Titrator 43
Parallel-Mixing Transfer Disk for the GeMSAEC Analyzer 45
Support Work 45
Modifications of Equipment 45

6. Methods Development and Evaluation Laboratory 47

Characterization of LMFBR Fuel Materials 47
Uranium Nitride 47
Plutonium Carbide and Carbonitride 47

Molten-Salt Reactor Related Analyses 47
Determination of Bismuth in LiCl and Li-Bi-Th Fluoride Salts 47
Lithium Metal in Anhydrous LiCl 48
Determinations of Helium in Boron Carbide 48
Infrared Determination of OH^- in $NaBF_4$ or $NaF \cdot NaBF_4$ Salts 48

Special Projects: Nonroutine Analyses 48
Application of the GeMSAEC Photometric Analyzer 48
Determination of Rhodium in Rh-Pt Alloys 49
Particle Size Analysis 49
Determination of Tritium in NaK 49
Thermogravimetric Analysis 50

7. Mass Spectrometry 51

8. Electron and X-Ray Physics Methods 53

Photoelectron Spectroscopy 53
Scanning Electron Microscopy 53
X-Ray Methods 54

PART B. SERVICE ANALYSES

9. Spectrometry Services 57

10. Process Analyses 60

High-Level Alpha Radiation Laboratory 60

General Analyses Laboratory 60

General Hot-Analyses Laboratory 61

Radioisotopes-Radiochemical Laboratories 61
Radiation and Safety Control 62
Quality Control 62
Inorganic Preparations 63

PART C. ACTIVITIES RELATED TO EDUCATION

Advisory Committee Members 64
Consultants 64
Great Lakes Colleges Educational Program 64
Graduate Thesis Research Program 65
Summer Student Program 65

PART D. EXTRALABORATORY PROFESSIONAL ACTIVITIES

PART E. PRESENTATION OF RESEARCH RESULTS

Publications 70
Contributions to Books 70
Articles 70
Theses 74
Reports 74
Oral Presentations 76
Fifteenth Conference on Analytical Chemistry in Nuclear Technology 76
At Meetings of Professional Societies, Conferences, and the Like 76
ORNL Seminars 79
Service Laboratory Seminars 80
Summer Lecture Series 80
Patents 80
Articles Reviewed or Refereed for Periodicals 81
Organization Chart 83

Preface

The Analytical Chemistry Division has the responsibility of providing analytical support to the research programs at ORNL. This annual progress report presents the activities of the Division that were carried on during the reporting period to meet this charge. Included are brief descriptions of the work of the various research and development groups and the service laboratories.

The concentration of effort on analytical environmental problems that was begun last year has been continued and intensified. A significant share of the research and development projects is devoted to adapting new or existing techniques and instrumentation to environmental analyses with particular emphasis on the reliability and validity of the resulting data. An increasing proportion of the analyses performed in the service laboratories is environmental, which also reflects the growing involvement of the laboratory with this problem. Proposals to conduct further analytical research in environmental methods of analysis have been written and submitted to the NSF-RANN office. Among those currently undergoing review are applications of unique facilities at ORNL such as the HFIR and the ORELA to difficult environmental problems. The Division is also assisting in the preparation of environmental quality impact statements that are required for nuclear power reactor plants and sites.

The Division's program on the characterization of cigarette tobacco smoke and condensate for the National Cancer Institute has continued. Current plans call for a major involvement with the Biology Division in developing methodology for bioassay methods for carcinogenicity of cigarette smoke.

A change in organization should be noted with the retirement in October 1971 of A. E. Cameron after 22 years of service at Oak Ridge in mass spectrometry. J. A. Carter has succeeded Dr. Cameron as head of the mass spectrometry group assisted by R. L. Walker who has assumed responsibility for the Referee Analysis Program. T. E. Willmarth also retired during this period (May 1971). His position as leader of the electron microscopy section has been taken by L. D. Hulett.

1. ANALYTICAL METHODOLOGY

The work of the Analytical Methodology Group is characterized by increasing interaction with other Groups within the Division, other Divisions within the Laboratory, and with extralaboratory institutions. Our work continues to be extremely diverse, sometimes hectic, always plentiful. This year the work is presented in four categories which may appear orthogonal to each other. Such is not the case. The objectives of our programs are different, but the mutual benefit among these programs is large.

Our involvement in environmental work continues to grow. Studies into the environmental utility of the (GeMSAEC) parallel-analysis system have progressed nicely. We have found this approach to be surprisingly good for turbidimetric analysis, and especially promising for luminescence measurements. Development of the analytical system for determining P, N, S, and C in ecological specimens is nearing completion; this is a joint project with the Ecological Sciences Division. Gas chromatographic (GC) studies have provided new approaches to the difficult analytical problem of determining anions. We are studying ways to determine organically bound metallic species, with emphasis on organomercurials. This effort has renewed our interest in developing multielement GC detectors. We have initiated a new program aimed at developing electrochemical air monitors, which is sponsored by the Air Quality Office of EPA. Our involvement with the ORNL-NSF Environmental Program has continued, and in fact overflowed to other Groups.

The Tobacco Smoke Analysis Program has continued to prosper. We have now reached a plateau of operability such that we can be responsive to the NCI's needs. The net result is that our program and facilities have assumed a prominent role in the NCI's smoking and health program. In this report we summarize the analytical procedures that have been established, and give some indication of their significance. Development work is aimed at improving methodology and efficiency and at establishing new capabilities.

The Cigarette Smoke Inhalation Methodology Project was initiated this year as a joint effort involving the Analytical Chemistry and Biology Divisions. It is also funded by the NCI. Our responsibilities center around the development of smoking machines and analytical methodology for evaluating and using cannulae for large-scale smoking experiments that use laboratory rodents for biological testing. Cannulae are mechanical devices for increasing deposition of smoke particulates in the lungs. We have already designed and built two smoking machines for rodent exposure, and we have begun to examine means for measuring extent of particulate deposition in the lungs. Numerous challenging analytical problems are anticipated during the course of this work. The Biology Division will be responsible for biological testing and assessment of results.

Our program in the Transuranium Research Laboratory continues to involve both research and support activities. We completed study of feedback controlled coulometric titrimetry this year. Studies into the use of conducting glass electrodes have continued at a modest level. We are now emphasizing the search for higher and lower oxidation states of the actinides in solution. To this end, we have explored their behavior in phosphoric acid medium and are studying their polarographic behavior in nonaqueous medium (acetonitrile). Spectral as well as electrochemical techniques are especially useful in this work, much of which is conducted jointly with members of other divisions.

2. REACTOR PROJECTS

The first successful in-line analysis of a constituent in a flowing molten-salt stream is now in operation. Our PDP-8I computer-voltammeter system is automatically analyzing for U(III) in a simulated MSRE salt in a thermal convection loop. A new in-line spectral probe is being developed for the analysis of flowing salt streams as its ultimate goal. The probe is a transparent rod constructed in such a manner that the analysis light beam enters and exits at one end and passes through a

known path length of sample at the other. Another in-line method is being developed for the measurement of the hydrolysis products of BF_3 in the cover gas of the proposed MSBR coolant salt, $NaBF_4$-NaF, (92-8 mole %). Both electrical and optical methods are being tested to determine if the temperature of the cover gas at which condensation occurs can be related to the hydrolysis products in the gas.

At least one proton-containing species, BF_3OH^-, has been found in all samples of the proposed MSBR coolant salt ($NaBF_4$) examined to date by infrared spectral measurements. An isotopic dilution technique involving the mass measurement of H/D ratios has been developed to determine the calibration factor for the infrared measurements. Another approach for the determination of hydrogen in $NaBF_4$ is based on the diffusion of hydrogen into a hollow palladium electrode when $NaBF_4$ melts are electrolyzed at controlled potential. The measurement of the pressure generated in the electrode is a sensitive measure of protons. The method offers specificity, applicability to in-line analysis, and the possibility of a measurement of $^3H/H$ ratios in the coolant. Other electrochemical investigations in $NaBF_4$ include the study of the $Fe^{3+} \rightarrow Fe^{2+}$ and $Ti^{4+} \rightarrow Ti^{3+}$ couples. Various spectral studies of solute species in molten $NaBF_4$ have also been performed. Ultraviolet spectra have been observed for Fe^{2+}, Fe^{3+}, Ti^{4+}, and UO_2^{2+}.

An Ni/NiF_2 reference electrode has been developed for use in molten fluoride melts. A single crystal of lanthanum trifluoride is used as a membrane in which the fluoride ions are the current-carrying species. Diffusion coefficients were determined in LiF-BeF_2-ZrF_4 at 500°C by voltametric and chronopotentiometric techniques.

Further spectral studies of oxygenated species in molten fluoride media were carried out in order to find a possible method for the determination of O^{2-} in fluoride melts.

Separation and counting techniques were used to analyze the natural gas from a well promoted by underground nuclear explosions and to study the processing of such gas.

3. ANALYTICAL BIOCHEMISTRY

We have continued to provide analytical assistance to the Biological Macromolecular Separations Technology Project and the Molecular Anatomy Program and are now assisting the Biology of Human Variants Group in the Biology Division.

In the analysis of transfer ribonucleic acids (tRNAs), assay conditions have been optimized for all *E. coli* tRNAs of interest by statistically designed experiments. An improved assay for formylmethionine-accepting tRNA was adopted, and assays developed for a few calf liver tRNAs. Polyacrylamide gel electrophoresis was used for separation of ribonucleic acids and of histones. Spectrophotometric methods for histones were also examined.

To date, 70 ultraviolet-absorbing compounds and 12 carbohydrates have been identified in fractions separated from physiological fluids by the Biochemical Separation Systems Development Group. A variety of analytical techniques were used. Gas chromatographic retention data on two columns has been particularly useful. Inorganic anions were also identified by gas chromatography. The capabilities of the analytical electrophoresis laboratory were improved by installation of a new detector on the microdensitometer which can be interfaced to a computer. Improvements were also made in gel casting techniques and staining and destaining as well as data storage and retrieval. We have assisted with several improvements to the GeMSAEC Fast Analyzer, namely an automatic reagent and sample loading device, an automated wash cycle to clean the rotor, and a temperature controlling system. A 42-cuvette rotor is being evaluated to increase sample capacity, and a miniature system is being developed which will operate in zero gravity with throwaway transfer disks containing prepackaged reagents.

Isopycnometric serology is being investigated for possible use in early cancer detection and in support of the embryonic antigen problem in the Molecular Anatomy Program. Methods for prenatal detection of human genetic disorders via ultramicroanalysis of noncultured amniotic cells are being developed. By analyzing isolated, living cells immediately following amniocentesis, the cell-cultivation period of four to six weeks generally required for reliable genetic counseling in high-risk pregnancies can probably be eliminated. We are assisting the Biochemistry of Human Variants Group in a screening program to identify metabolic defects in mentally deficient patients. Of interest at this time is a defect in the metabolism of histidine which is indicated by the presence of formiminoglutamic acid in urine. We are also cooperating with two NAS-NRC committees to establish specifications for adenine for use in blood bags and for labeled nucleotides and related compounds.

4. NUCLEAR AND RADIOCHEMISTRY

A program has begun to determine experimentally the trace elements in the influent and effluent materials of a selected TVA coal-fired steam plant. Other environmental studies include determination of mercury and cadmium both by x-ray fluorescence analysis using radioisotopic excited sources, and by prompt gamma measurement following ^{252}Cf neutron activation. Our methods for NAA determination of mercury have been improved and possible losses studied; wet-ashing methods for dissolution of mercury samples have been developed. A cooperative program with Vanderbilt University to evaluate assessment of human exposure to environmental mercury has also begun. Sensitivities and thermal effects in proton-reaction analysis of biological samples for ^{12}C, ^{13}C, and ^{15}N were determined. The effects of radiation on colorimetric methods for iron and niobium were studied, and under the nuclear safety support program $NaVO_3$ as a deterrent to radiolytic hydrogen formation was investigated and the reaction of various paints with proposed spray solutions were evaluated. Cerenkov counting was applied to low-level radioactivity surveys and a method to assay mixtures of two radioisotopes was developed. Several new types of phosphor screens are being tested for use in the detection of x rays.

Returned lunar samples from Apollo 14 and Apollo 15 were examined for induced and natural radioactivities. The cooperative isotopes program continued with information gathering and dissemination, half-life determinations, special measurement techniques, and standards and standard methods occupying our main interest.

Our photon activation facility at the ORELA is being used by a number of divisions as well as ourselves. In our own research we have studied sensitivities for various elemental determinations, particularly those of concern in environmental studies. A new self-loading tritium target for 14-MeV neutron production was designed and tested; it offers long-term stability coupled with high neutron output. Our HFIR activation analysis laboratory was also completed, and we are testing irradiation effects on the rabbits we use. In connection with our activation work we have updated our table of nuclear data used in computer-assisted gamma-ray spectrum analysis, and written programs to punch and read data in ASC II form. These programs, coupled with Ge(Li) spectroscopy, were used in studying fission products in high-temperature gas-cooled reactors – primarily the Peach Bottom reactor in Pennsylvania. Gamma-ray spectrometry continues to be applied in other programs such as the study of fission product release from microspheres, examination of bismuth specimens for freedom from ^{207}Bi contamination, and special activation problems. We continued to cooperate with other divisions (such as Physics) by carrying out chemical separations of radioactive species for nuclear decay studies and providing 14-MeV neutron activation determinations for a number of elements in a variety of matrices.

5. ANALYTICAL INSTRUMENTATION

We have continued to increase the usefulness of our computer analytical instrumentation systems by development of new and improved compilers (FOCG and FODK) and a flexible disk monitor. We increased our bulk storage capability through installation of a Tennecomp TP-1371 tape cartridge loader in the 4K PDP-8/I, a DS32 disk expander in the 8K PDP-8/I, and through programming and interfacing an inexpensive cassette tape recorder to the mini-computers.

We have contributed programming to computer assist in least-squares procedures for flame photometry and density-gradient analysis, for assessing particle-size distributions from Coulter counter data, for plotting ESCA data, for simplifying clinical laboratory analyses, for the analysis of x-ray spectra produced by the scanning electron microscope, and for routine service chemical analysis. For the Tobacco Smoke Program, we have devised programs to sort, rank, and typeout in report form their large arrays of data.

Our work on computerized electrochemical systems was continued with development of a program for removal of the residual current in a polarographic wave. By acquiring a remote terminal, we plan accessing the ORNL PDP-10 computer in a dial-up, time-sharing mode, using FORTRAN IV, AID, and BASIC languages for coding.

A new, automatic, controlled-current, Karl Fischer titrator was designed for the determination of water to be used for standardization and calibration of other methods of analysis and for on-site analysis. A new, parallel-transfer disk for the GeMSAEC analyzer was developed to achieve rapid mixing for chemical reactions with half-times of about 0.1 sec. We have participated in the design and experimental application of tobacco smoke inhalation apparatus for laboratory animals, contributed to the LWBR Support Program by providing more of our Q-1728A and Q-4010 instruments for analysis, made significant improvements to our Q-4010 coulometric titrator and Q-2943A cyclic voltammeter, provided instrumentation for the flame-

less atomic absorption determination of mercury in ecological samples, and are cooperating in the development of an electrochemical monitor for Cl_2 and HCl.

6. METHODS DEVELOPMENT AND EVALUATION

This group has continued efforts to establish and support an LMFBR analytical development program within the Service Laboratories. Most significant has been the progress made in the chemical characterization of uranium nitride and plutonium carbide and carbonitride fuel materials. We continue to give analytical support to the MSRE studies initiated by the Metals and Ceramics, Chemical Technology, and Reactor Chemistry Divisions.

A chromatographic method for the determination of helium in irradiated boron carbide is under investigation. Infrared spectroscopy has been used to determine water and hydroxyl ion in $NaBF_4$ salts and NaF-$NaBF_4$ entities which have been proposed as a coolant for molten-salt reactors. A particle analyzer based upon the Coulter technique was evaluated. In support of other Analytical Services, we are evaluating the GeMSAEC photometric analyzer for adoption to methods used routinely in our laboratories.

7. MASS SPECTROMETRY

In the past year approximately 800 samples were run on the low-resolution organic mass spectrometer. Most of these were from the body fluids program with some from cigarette smoke condensate. Spectra of samples from Snyder and Kasama (ORAU) enabled them to identify a new class of lipids. Some samples were analyzed with the high-resolution mass spectrometer at a resolution of circa 30,000. Interfacing of the low-resolution instrument to the IBM 1130 is progressing and will reduce, markedly, dependence on the recording oscillograph. Similar interfacing for the high-resolution instrument should improve mass measurement by an order of magnitude.

The surface ionization studies were continued with measure of residence times and desorption energies of Th^+, Np^+, and Pu^+ on rhenium. No long-lived ionic surface states exist for these systems.

8. ELECTRON AND X-RAY PHYSICS METHODS

This group offers service and performs analytical methods development in the following fields: scanning electron microscopy, transmission electron microscopy, photoelectron spectroscopy, electron probe microanalysis, x-ray fluorescence spectroscopy, x-ray absorption edge spectroscopy, and x-ray diffraction. In the past year a scanning electron microscope has been placed in service. It has been used to examine solid surfaces of many types. A nondispersive x-ray fluorescence analyzer has been used for elemental analysis of specimens simultaneous with their observation. Photoelectron spectroscopy has been used for studying sulfur compounds adsorbed on smoke and fly-ash particles and for analyzing protective oxide coatings on corrosion specimens. X-ray diffraction has been used for the analysis of pure compounds and mixtures and for determining crystallite sizes in uranium and thorium sols. The diffraction equipment has been modified so that radioactive specimens can be safely handled. X-ray fluorescence has been used for the nondestructive analysis of alloys.

9. SPECTROMETRY SERVICES

To speed the analysis of mercury in environmental samples by the isotope dilution technique, a probe-type sample changer was constructed and adapted to the MS-7 spark-source mass spectrometer. The rate of running samples increased from 15 per day to 15 per hour. Lead and cadmium are also determined by the isotope dilution technique. TVA and the Environmental Protection Agency (EPA) sought and received assistance on the analysis of pollutants by emission and spark-source mass spectrometric techniques.

Procedures for the analysis of impurities in $^{233}UO_2$ were finalized and elemental impurity specifications analyses for TRU reprocessed CmO_2 were carried out employing electrodes tipped with a mixture of CmO_2 and Ag. Fission products were determined on MSRE graphite and INOR-8 alloys for the Metals and Ceramics Division. For burnup calculations on mixed irradiated UO_2-PuO_2 fuel, a triple-spike procedure was developed for the analysis of ^{148}Nd, U, and Pu. The spike solution consisting of ^{150}Nd, ^{233}U, and ^{242}Pu is weighed and equilibrated with the dissolved fuel sample. The extreme sensitivity of the mass spectrometer eliminates chemical separations; thus, ^{148}Nd, U, and Pu are determined on the same filament loading. The isotopic analysis for each element is made on an unspiked aliquot.

The gas mass spectrometer manifold was revised so that gas samples smaller than 0.01 standard cubic centimeter can be analyzed. Isotopic analyses were made on 850 samples of 35 different elements for the Isotopes Division. The Transuranium Laboratory reported 5110 results and the combined Emission Spectrochemistry and Spark-Source Mass Spectrometry Laboratories reported 55,200 results.

10. PROCESS ANALYSES

The process laboratories performed some 125,000 analyses during the past year. This decrease from last year was accompanied by a decrease in personnel.

The High-Level Alpha Radiation Laboratory added several new methods and revised some of the older ones.

The General Analyses Laboratory checked methods for major and minor constituents in B_4C_4,BN, and boron powder. Homogeneity of fuel sticks was verified by separation of the component parts. Atomic absorption and flame emission were used in the analysis of soil, plant, and water samples.

The General Hot-Analyses Laboratory continued to decrease its activities in hot-cell work. The majority of the determinations made were in support of reactor-related programs and the Liquid and Gaseous Waste Disposal program. Initial steps were taken to prepare for the analysis of samples from Chemical Technology Division's participation in the LWBR program. A featured change was the filtering and refilling of two zinc bromide windows. The iodine adsorber system in air exhaust was completed and tested successfully.

The Radioisotopes-Radiochemistry Laboratory continued to perform the same type of analyses as last year but noted an increase in requests for tritium analyses – especially in water samples.

Several batches of ^{233}U were cleaned up by the new ion exchange process in the pilot plant. We were able to monitor the entire separation process by nondestructive gamma-ray spectrometry in Building 3019.

A new Radiation Control and Safety Officer was appointed. We led all divisions in hours accumulated since the last loss-time accident.

Several permits were issued for handling of radioactive materials. We continued to clean up windows in the hot-cell areas.

The number of control samples remained at approximately the same level as last year. A new program is being prepared for the LWBR project which will start near the end of the fiscal year.

Inorganic preparation programs carried on from previous years included the preparation of ferrites, special alloys, and the salvaging of isotopes. In addition, this year a considerable number of miscellaneous syntheses were performed for various groups in the Chemistry, Solid State, Physics, and Reactor Chemistry Divisions.

PART A. ANALYTICAL RESEARCH AND DEVELOPMENT

1. Analytical Methodology

W. D. Shults, Group Leader

M. R. Guerin
H. Kubota
A. D. Horton[1]
C. A. Horton
D. R. Matthews[2]
W. L. Maddox[3]
T. R. Mueller[3]
C. A. Pritchard
R. B. Quincy
W. J. Ross
J. R. Stokely
H. W. Wright
P. S. Gouge[4]
G. Olerich
P. M. Rowan[2]
C. M. Wilson[2]
R. L. Coleman[5]
J. A. Ealy[6]
B. F. Fieselmann[7]
J. R. Kuempel[8]
J. D. Lodmell[9]
J. E. McCracken[10]
J. B. Ohlrogge[7]

ENVIRONMENTAL ACTIVITIES

During the past year we have continued to support the Laboratory's environmental programs and to expand our capabilities and activities in this area.

Electrochemical monitors for air pollutants. We have explored the feasibility of using electrochemical cells to monitor air pollutants. There are many ways to do this, but in our work emphasis has been put on the use of thin layers of solution separating a mercury pool electrode from the monitored atmosphere. We designed and built a cell of Teflon for these experiments, and have studied the behavior of sulfur dioxide and chlorine in some detail. We have investigated two modi operandi: with one, the current due to electrochemical reaction of the pollutant is monitored while the electrode potential is held constant. With the second technique, chemical or electrochemical reaction products are accumulated at the electrode surface and periodically determined by voltammetric or coulometric measurements. We found these techniques to be quite promising. For example, the response time of this cell to changes in SO_2 concentration (in air) is about 1 min, and the signal-to-noise level is approximately ten when the SO_2 level is 20 ppb. Comparable performance is obtained when Cl_2 in air is measured. Isolation of the thin layer of electrolyte solution by a thin dimethylsilicone membrane limited the response of the detector but provided increased selectivity. These feasibility studies were aimed at the development of sensitive and selective air monitoring devices that are suitable for portable or remote use and that may determine several

1. Reactor Projects Group.
2. General Analyses Laboratory.
3. Analytical Instrumentation Group.
4. Methods Development and Evaluation.
5. ORAU Predoctoral Fellow from the University of Tennessee, Knoxville.
6. ORAU Premasteral Fellow from the University of Tennessee, Knoxville.
7. GLCA Student Guest from Earlham, Richmond, Indiana.
8. GLCA Resident Professor from DePauw University, Greencastle, Indiana.
9. Predoctoral student from the University of Tennessee, Knoxville.
10. ORAU Predoctoral Fellow from the University of Missouri, Columbia.

species concomitantly. An article describing these preliminary results has been published,[11] and a patent application has been filed.

This work is continuing under contract with the Air Programs Office of the Environmental Protection Agency. We are developing an electrochemical monitor for Cl_2 and HCl concentrations in the air. The work is progressing along two lines. First, we are studying the voltammetric behavior of the halogens (Cl^-, Br^-, and I^-) at platinum, gold, silver, and mercury electrodes in several supporting electrolyte media. To date, the most promising results have been obtained at a platinum electrode in 6 to 8 *M* H_2SO_4, in which chloride oxidation and chlorine reduction are rapid. The potentials for the various halogen electrochemical processes are well separated, and we believe that it would be possible to determine chlorine and chloride accurately even in the presence of substantial concentrations of the other halogens. However, such an analysis would require rather elaborate data-reduction techniques, and hence a second approach to this problem is being investigated. It is based on specific ion reactions. Of these reactions, those with mercury appear to offer most promise for low-level monitoring. We are presently investigating techniques for fabricating "solid" mercury electrodes, and we expect to be able to determine Cl^- at the parts-per-billion level.

Environmental applications of the GeMSAEC photometric analyzer. Our program of study into the environmental utility of parallel analysis has made substantial progress during the past year. The paper that described our study of the determination of orthophosphate was published.[12] Studies of two turbidimetric procedures for determining sulfate were completed, and a paper has been prepared that describes that work.[13] Luminescence measurements have been studied in some detail, with excellent results, but the work is not complete. A general paper on the potential utility of the parallel-analysis technique in environmental analysis was also published.[14]

The work in turbidimetry was surprisingly successful. Both procedures – $BaCl_2$ and 4-amino-4′-chlorodiphenyl (CAD) – proved to be practical for GeMSAEC use, and yielded results far superior to conventional turbidimetric procedures for determining sulfate. The $BaCl_2$ procedure is usable over the range 0 to 40 ppm sulfate, and gives results that are accurate to ±1.5% and precise to 0.7%; measurements are made 30 sec after mixing. The CAD procedure is useful over the range 0 to 20 ppm; it yields results that are accurate to ±0.5% and precise to 0.7%; measurements are taken 20 sec after mixing. Neither centrifugal loss of precipitate nor contamination of the cuvettes by particulate material proved to be a problem. We believe that several other turbidimetric procedures could be adapted to the GeMSAEC system and hence be made competitive with photometric procedures in precision and accuracy.

To make luminescence measurements, the GeMSAEC rotor assembly was fitted with a light-tight enclosure. Also, a light pipe was installed into the system to increase the signal-to-noise ratio at the high phototube voltages that must be used with luminescence reactions. (In so doing, the noise level was improved by cushioning the phototube.) Finally, a parallel-flow sample disk was conceived and built which provides virtually instantaneous blending of solutions as they are thrown into the cuvettes. This disk design will facilitate kinetic measurements as well as studies of rapid luminescence reactions; a patent application is being filed on its design.

Two luminescence methods have been studied: a peroxide method based upon the copper-catalyzed luminol-peroxide reaction and the well-known ATP (adenosinetriphosphate) method based upon the luciferin-luciferase reaction. These reactions give linear calibration curves and good precision (ca. 5% for ATP) over a useful concentration range (0 to 10 ppm for ATP). We want to study the ATP procedure and its utility in detail, because ATP concentration reflects viable biological activity (e.g., pollution). The work has been delayed for lack of suitable manpower. We are anxious to extend this program to kinetics and fluorescences techniques also.

This work comprises the doctoral research of R. L. Coleman and is described in detail in his thesis.

Hydrogenation – gas chromatography (GC) system for determining P, N, S, and C. The development of this analytical system proved to be a very difficult job, but most problems have now been solved and we have analyzed several different types of ecological samples with it for the Ecological Sciences Division. Typical specimens are rye grass seed, particulates from the

11. J. R. Kuempel and W. D. Shults, "An Electrochemical Monitor for Air Pollutants," *Anal. Lett.* **4**, 107 (1971).

12. R. L. Coleman, W. D. Shults, M. T. Kelley, and J. A. Dean, "Applications of the GeMSAEC Centrifugal Photometric Analyzer in Environmental Analysis. The Determination of Phosphate," *Anal. Lett.* **4**, 169 (1971).

13. R. L. Coleman, W. D. Shults, and J. A. Dean, "Applications of Parallel Photometric Analysis in Environmental Analysis. The Turbidimetric Determination of Sulfate," submitted for publication in *Analytical Chemistry*, 1971.

14. R. L. Coleman, W. D. Shults, M. T. Kelley, and J. A. Dean, "Environmental Applications of a Centrifugal Photometric Analyzer," *Amer. Lab.* 26 (1971).

Walker Branch Watershed, insects, tulip poplar leaves, yeast, and forest wetfalls. These samples, as received, are oven or freeze dried and ground to pass a 40-mesh screen. They are then weighed into quartz combustion boats, the boats are injected into a Dohrmann pyrolysis furnace that contains an appropriate catalyst, and the compounds are converted, in the presence of hydrogen, to the corresponding hydrides (PH_3, H_2S, NH_3, and CH_4). Dual flame-photometric detectors with appropriate filters are used to determine sulfur and phosphorus. Carbon is determined with a flame ionization detector. Nitrogen is determined with a Coulson electrolytic conductivity detector.

We have had considerable difficulty with the reduction and detection of phosphorus. Crushed quartz used as a reaction medium gives at least qualitative reduction, but quenching of the chemiluminescence of phosphorus by carbon interferes with flame-photometric detection. A chromatographic separation of phosphine and methane is required. We are seeking a suitable column for this separation. Considerable interest in this system has developed outside ORNL, and therefore we have published a paper that describes the present system.[15] This activity is a joint undertaking between the Analytical Chemistry and Ecological Sciences Divisions.

Gas chromatography of aqueous solutions: inorganic anions. We have continued work on techniques for preparing volatile derivatives of inorganic anions for gas chromatography (GC) use. One very promising technique is trimethylsilylation of the anions with *N, O*-bis(trimethylsilyl)-trifluoroacetamide (BSTFA). Another method of forming stable volatile species from inorganic anions is the thermal dealkylation of their quaternary alkylammonium salts. Both of these approaches are being investigated.

Calibration curves have been constructed using trimethylsilyl (TMS) derivatives of sulfate, phosphate, vanadate, arsenate, borate, carbonate, and several organic anions such as tartrate, sulfamate, citrate, salicylate, and oxalate. Flame-ionization detection was used, providing lower limits for these calibration curves of about 0.5 μg. Iodate, nitrate, chromate, perchlorate, iodide, bromide, chloride, and fluoride gave no detectable TMS-derivative peaks. A flame-photometric (phosphorus- or sulfur-selective) detector was used to construct calibration curves for TMS phosphate and sulfate compounds down to 10 to 500 ng respectively. All the anions except phosphate exhibited some loss on the column, especially severe below 0.5 μg. We have also investigated solvent extraction of the above anions, using a quaternary alkylammonium salt dissolved in a 7% (v/v) octanol-toluene solvent, as a separation-concentration step preceding TMS derivatization. Only phosphate gave a TMS peak when reacted in the quaternary salt solution. Extraction from water enables larger quantities of sample to be used since water reacts vigorously with the silylating reagent. Our work with phosphate is being published.[16]

Chloride, iodide, and bromide are completely extracted from water into an undecanol-toluene solution of tetraheptylammonium carbonate. Upon injection of the organic extract into a GC inlet at temperatures of at least 150°C the salts form 1-haloheptane and triheptylamine. Other anions such as phosphate, hydroxide, sulfate, and fluoride form triheptylamine and 1-heptene (the Hofmann degradation), plus species such as HF, HSO_4^-, etc. W. T. Rainey used combined GC–mass-spectroscopy techniques to identify the 1-haloheptane, triheptylamine, and 1-heptene. Calibration curves were linear down to 1 to 2 ppm halide, with flame-ionization detection. A tritium foil electron-capture detector (ECD) gave very poor results because the amine coats the foil at the upper temperature limit of this detector. We are considering use of a bypass valve with the tritium foil ECD, or a ^{63}Ni ECD. These alternatives should markedly decrease the lower limit of detection of the three halides.

This work comprises the doctoral research of D. R. Matthews and will be published in detail in his thesis.

Extraction and subsequent GC determination of organomercurial salts. An investigation of the extraction and subsequent GC determination of highly toxic organomercurial salts was initiated this year. The goal of this work is to provide improved ways to analyze for these salts in materials of ecological interest.

We are investigating the extraction of CH_3HgX and C_2H_5HgX (X = Cl, Br, and I) with benzene from both aqueous solutions and biological materials such as soils, seed coatings, and fish tissue. The extractions are being monitored with ^{203}Hg tracer which has been synthesized into CH_3*HgCl and C_2H_5*HgCl. The amount of mercury extracted is determined by gamma-scintillation counting using an NaI crystal. Typical distribution ratios (D) for CH_3HgX between water and benzene are 11, 40, and 183 for 0.1 M Cl, Br, and I respectively.

15. A. D. Horton, W. D. Shults, and A. S. Meyer, "Determination of Nitrogen, Sulfur, Phosphorus, and Carbon in Solid Ecological Materials via Hydrogenation and Element-Selective Detection," *Anal. Lett.* **4**, 613 (1971).

16. D. R. Matthews, W. D. Shults, M. R. Guerin, and J. A. Dean, "The Extraction-Derivatization–GC Determination of Trace Phosphate in Aqueous Media," *Anal. Chem.* in press (1971).

The D values for the ethyl mercury(II) halides are about three times larger than the corresponding values for methyl compounds. Data have been obtained which indicate that C_2H_5HgCl forms $C_2H_5HgCl_N^{N-1}$ ($N = 1, 2, 3$) at increasing Cl^- concentrations with formation constants $K_1 \cong 0.140, K_2 \cong 0.0435$.

The organomercurial salts CH_3HgCl, C_2H_5HgCl, and $CH_3OC_2HgHgCl$ have been separated by gas chromatography with a column made from 5% HI-EFF 8 BP on ANaKROM ABS (80/100). A Varian electron-capture detector was used to monitor the elution of the compounds. Calibration curves were obtained for a range of 1 to 13 ng of the compounds.

This work comprises the master's research of J. A. Ealy, and will be published in detail in his thesis.

Multiwavelength flame-photometric detector. We are extending previous work done in this group[17] on the development of a multiwavelength flame-photometric detector for use in gas-phase determinations of organometallic compounds. The multiwavelength capability of the flame-photometric detector would make it a useful tool for the detection of organometallic compounds that are present as environmental pollutants. Most of the work done thus far has been directed toward the design and construction of an N_2O-air, acetylene premix laminar-flow burner system which will allow selection of optimum flame conditions for the excitation of different metallic species.

Water laboratory. Our main effort in the Water Laboratory during the past year has been phosphate analyses on water samples from the Ecological Sciences Division. These analyses were made with the Technicon AutoAnalyzer using the phosphomolybdate method. More than 5000 samples were analyzed, which is an increase of 150% over the number of samples analyzed during the previous year. A further 50% increase is anticipated for the coming year. Analytical results are now reported down to 5 ppb phosphate with estimates on the concentration below this level. Sample preparation, preservation, and analysis have been standardized, and we are now training a member of the General Analysis Laboratory to handle this analysis routinely in the future.

Students from the MIT practice school created a continued demand for chemical oxygen demand determinations on carbonized-paper waste products. In addition, determinations of the ignition temperature were made by differential scanning calorimetry on a number of these products.

17. W. D. Shults et al., "Silicon-Specific Flame-Photometric Detector," *Anal. Chem. Div. Annu. Progr. Rep. Oct. 31, 1969*, ORNL-4466, pp. 14–15.

Last year we purchased a Carle thermal analyses system to determine the "total organic carbon (TOC)" of unknown organic mixtures in an aqueous medium. This system has not performed to our satisfaction. We have concluded that, to obtain the desired results, it will be necessary to resort to high-temperature catalytic hydrogenation of the organic material and to use the generated methane as the feed material for the TOC analyzer. Modifications have been made on the system, and tests are now under way to determine the feasibility of this approach.

Participation in ORNL-NSF environmental program. We have continued to be involved in the work of several groups within this program, especially the Environmental Indices Group. Our work has focused upon the development of indices of air quality: concepts and means for scaling, weighting, and combining numerous measured parameters so as to obtain an expression of air quality that is both understandable and meaningful. Indices of environmental quality must be user-oriented, and hence we have investigated several different schemes for indexing air quality. A very simplistic one, ORAQI,[18] has been devised specially for the general public and will soon be tested on a nationwide scale by the National Association of Broadcasters. A second index, APINDEX, is being developed jointly with members of the Statistics Group of the Mathematics Division; it is statistically based and is intended for use by technologists. We believe that the implications of this index work are great for analytical chemists because a valid index reflects directly upon standards and criteria as well as the measurements themselves (type, frequency, cost, and performance).

Detailed environmental statements. The National Environmental Policy Act of 1969 (NEPA) requires all agencies of the Federal Government to report on major federal actions that significantly affect the quality of the environment. Issuance of licenses by the AEC for the construction or operation of nuclear-fueled electric power plants and fuel-processing plants falls in this classification. At present all action on the licensing of nearly 100 nuclear facilities has been suspended until the requirements of this act have been fulfilled by the AEC. Because of the magnitude of the job and the need for personnel who are qualified in various phases of both environmental sciences and nuclear technology, the AEC has requested ORNL to assist in the drafting of detailed statements that assess the items set forth in NEPA as they relate to these plants:

18. W. A. Thomas, L. R. Babcock, and W. D. Shults, "Oak Ridge Air Quality Index," ORNL-NSF-EP-8 (1971).

1. The environmental impact of the proposed actions.
2. Any adverse environmental effects which cannot be avoided should the proposal be implemented.
3. Alternatives to the proposed action.
4. The relationship between local short-term uses of man's environment and the maintenance and enhancement of long-term productivity.
5. Any irreversible and irretrievable commitments of resources which could be involved in the proposed action should it be implemented.

Six teams of ORNL personnel have been established to make the needed evaluations and to prepare the necessary statements for an initial list of 15 nuclear power plants and one fuel-recovery plant. Four members of the Analytical Chemistry Division are participating on these teams.

TOBACCO SMOKE ANALYSIS PROGRAM

Our tobacco smoke analysis facility is now fully operational. It has assumed a prominent role in the National Cancer Institute's (NCI) program of study into the contribution of cigarette smoking to lung cancer in man. We are supplied experimental cigarettes and cigarette smoke condensates by the NCI. These are subjected to an extensive battery of chemical analyses in search of chemical indicators of dose, toxicity, ciliatoxicity, tumor initiation, tumor promotion, and cardiovascular insult. The results of our analyses are correlated with the characteristics of the cigarettes and with the results of bioassays carried out by other contributors. Much of our attention is now directed at improving and expediting the required analyses and searching for additional indicators of biological response. Marijuana cigarettes are also being studied.

Because this program has now reached the plateau of operability, it seems appropriate to summarize here the types of measurements that are made, and why, and to indicate typical results. Much greater detail is given in our progress reports.[19,20]

Particulate matter. The "tar" and nicotine deliveries of the experimental cigarettes are the primary results of the analysis of particulate matter. The tar delivery is a measure of the dose of possibly carcinogenic material provided by a single cigarette of each type. The nicotine delivery provides a measure of the experimental toxicity and cardiovascular insult associated with each cigarette type. Taken together, the tar-nicotine deliveries allow a rough comparison of the experimental cigarettes with commercial cigarettes. Careful generation of fresh particulate matters is an integral part of the analytical procedure required for determining tar and nicotine. We begin by exposing at least 100 cigarettes, of the type to be analyzed, to room air at 75°F and 60% R.H. for at least 36 hr. We select at least 16 cigarettes according to weight and consistency, and smoke them through standard glass-fiber filters, carefully observing standard puff parameters. The total particulate matter (TPM) is determined as the increase in weight of the filter attending the smoking process. We then analyze extracts of the TPM for water and nicotine and compute the tar delivery as the difference between TPM and water plus nicotine. A computerized system for weight selecting and grouping test cigarettes is being developed by R. W. Stelzner.

The experimental cigarettes have been found to deliver from 0.2 to 3.4 mg of nicotine per cigarette with an average delivery of 1.8 mg/cigarette. This range agrees nicely with the range of deliveries by commercial cigarettes – 0.1 to 2.2 mg/cigarette. Tar deliveries range from 6 to 38 mg/cigarette, with an average of 25 mg/cigarette. Commercial cigarettes deliver between 2 and 31 mg/cigarette of tar.

Gas phase. The gas phase is defined for analytical purposes as that portion of the smoke which passes through the standard glass-fiber filter (Cambridge). Although not directly involved in carcinogenesis, the gas-phase composition is important in consumer acceptability, ciliatoxicity, and cardiovascular insult. Acetaldehyde, acrolein, hydrogen cyanide, and formaldehyde are of primary importance as ciliatoxins. We have determined acetaldehyde and acrolein using an in-house cryothermal gas-chromatographic procedure. Acetaldehyde deliveries range from 0.6 to 1.2 mg/cigarette and acrolein from 0.05 to 0.12 mg/cigarette. Although this method is capable of excellent resolution, sensitivity, and precision, difficulties in handling standards of acetaldehyde continue to restrict its quantitative reliability. Hydrogen cyanide deliveries, presently determined colorimetrically, have been found to range from 45 to 234 μg/cigarette. Formaldehyde deliveries, also determined colorimetrically, have ranged from 17 to 70 μg/cigarette. To date, only hydrogen cyanide deliveries correlate well with experimentally observed ciliatoxicity.

Carbon monoxide is an important smoke component because of its contribution to the formation of car-

19. M. R. Guerin and W. D. Shults, *Tobacco Smoke Analysis Program Progr. Rep. Jan. 1, 1970–Sept. 1, 1970,"* ORNL-4642 (1970).

20. M. R. Guerin, *Tobacco Smoke Analysis Progr. Rep. Sept. 1, 1970–July 1, 1971,"* ORNL-4735 (1971).

boxyhemoglobin. Carbon dioxide provides a measure of the "completeness" of combustion. Both of these components can be quantitatively determined gas chromatographically provided a reliable sampling technique is available. We have examined a variety of sampling techniques and conclude that piston smoking plus Saran-bag collection is the best technique now available. Using this approach we have determined that the experimental cigarettes deliver from 4.0 to 8.6 vol % of carbon monoxide and 6.8 to 10.3 vol % of carbon dioxide.

We use an empirical procedure for measuring the pH of the gas phase of smokes. The acidity of the gas phase is seen to increase with increasing puff number. The average pH has varied from 6.04 to 4.34 over the series of experimental cigarettes.

We have developed a procedure that allows the entire gas-phase delivery of a cigarette to be analyzed for oxides of nitrogen. We find NO_2 deliveries ranging from 60 to 770 μg/cigarette.

We have studied the feasibility of determining sulfur components in the gas phase of smoke by GC with sulfur-selective (flame photometric) detection. Trixylol phosphate appears to be the only column material capable of quantitatively visualizing H_2S and SO_2. A smoking machine has been interfaced with an analytical GC, through a sampling loop, so that it is possible to examine the sulfur delivery of smoke at various times during a 2-sec puff. Preliminary data suggest that the sulfur delivery of cigarettes may be considerably different from what is generally presumed. We have prepared a manuscript[21] that describes our preliminary experiments in this area.

Smoke condensates. Cigarette smoke condensates are used in skin-painting experiments. They are studied for dosage, experimental toxicity, tumor initiation, and tumor promotion. We routinely analyze test condensates.

We employ an in-house GC method for determining acetone and water in test condensate preparations. This provides a measure of the "dry condensate" content of the preparation. Nicotine is determined by GC, and "nicotine alkaloids" is determined spectrophotometrically.

The tumor-promoting potential of condensates is estimated by measurement of their weak acid content. We determine phenol both colorimetrically and gas chromatographically. Cresols are measured gas chromatographically. Acids are reexamined via pH and titrimetric measurements. We have characterized the full series of condensates at least once and are in the process of repeating these measurements on the final batches of condensates.

The polycyclic aromatic hydrocarbon (PAH) fraction of the test condensate reflects tumor-initiating potential. We determine phenanthrene (Phen), benz(a)anthracene (BaA), and benzo(a)pyrene (BaP) as measures of the PAH fraction. These determinations are both difficult and time consuming, so considerable effort has been put into their refinement. Following a lengthy sample preparation procedure, Phen and BaA are determined by GC, and BaP is determined by fluorescence spectrophotometry. Major revisions in the initially recommended procedure include the use of dimethylsulfoxide for PAH extraction, incorporation of a florisil column cleanup step, the reduction of alumina column separation times, the use of efficient concentrative evaporators, and the use of polar Apiezon liquid phases in GC measurements. Standard addition techniques indicate complete recoveries of added Phen, BaA, and BaP.

Marijuana smoke. We have run a number of marijuana cigarettes and one condensate preparation through several of these procedures. We find that the marijuana cigarettes generate approximately the same amount of TPM and water as does the average experimental tobacco cigarette, about the same amount of acetaldehyde and acrolein, more hydrogen cyanide and gaseous sulfur compounds, and slightly less carbon monoxide and carbon dioxide. The composition of the condensate is very similar to that of tobacco smoke, the marijuana generating somewhat more Phen, BaA, and BaP. We plan to subject marijuana cigarettes to the entire battery of chemical tests.

Research and development activities. Our research and development efforts are aimed at improving existing procedures, providing new measurements capabilities, and increasing efficiency in our operations. A brief investigation has been conducted into the measurement of the electrical potential of smoke. It is possible to measure potential on a puff-by-puff basis with a platinum-calomel electrode pair. Measurements of this type may prove invaluable in assessing the influence of smoke on redox-controlled biological processes. Chromatographic component profiling is now better characterized and, we feel, already applicable to surveys of the relative compositions of smoke fractions. An evaluation of nuclear techniques for providing complete inorganic and radiochemical characterizations of tobacco smoke has been initiated. We have incorporated a small computer and programmable calculator

21. M. R. Guerin "Detection of Sulfur-Containing Compounds in the Gas Phase of Cigarette Smokes," *Anal. Lett.* in press (1971).

into our data-handling operations to provide increased reliability and efficiency.

CIGARETTE SMOKE INHALATION METHODOLOGY PROJECT

Inhalation exposure experiments designed to evaluate the carcinogenicity of cigarette smokes using laboratory rodents have generally been unsuccessful. A popular explanation for this failure is that the animals have extensively developed nasal turbinates that act as highly efficient particulate traps. The quantity of smoke reaching the lungs is, thus, less than that necessary for tumor development in the lifetime of the rodent. An intratracheal cannula has been suggested as a means for increasing lung deposition. A collaborative effort with the Biology Division has been initiated to evaluate these cannulae. Drs. P. Nettesheim and D. Creasia are responsible for the biological aspects of this project and for final assessment of the utility of the nose bypass technique. Included among our primary responsibilities are the design, fabrication, evaluation, and supply of smoke generation-inhalation systems; chemical characterization of the chamber environment, cigarettes, and cigarette smokes; development and application of lung-deposition measurement techniques; and chemical studies of target animal organs. Machine development and the development of lung-deposition measurement techniques are presently being emphasized.

We have produced two machines for in-house use. Their design is optimized to allow the simultaneous exposure of ten hamsters to an environment that is 10% in smoke. A standard 35-cc puff of 2-sec duration is drawn into the inhalation chamber, allowed to stand for a preselected time, and the smoke is then replaced with fresh air. This cycle repeats once every minute until the standard butt length is reached. Although intended as a device for preliminary studies only, this design appears to perform as well as other intermittent exposure devices. Further evaluation is planned.

Containing cannulated hamsters during exposure poses new problems. Drastic movements of the head or neck might result in internal injury by the cannula. Working with the biologists, we have devised a container which restrains the animals sufficiently and allows cannulation after containment.

Second in importance to supplying the collaborators with an interim smoking device is the development of a lung-deposition measurement technique. The technique must allow the determination of localized (organ specific) deposition and must measure the deposition of particulates without interference by gas-phase deposition. Deposition measurements made to date rely on the use of cigarettes labelled with ^{14}C-hexadecane. The alkane is deposited via syringe in the butt end of the cigarette. As the cigarette is smoked, a portion of the label is swept into the smoke with each puff. After exposure, the animals are sacrificed and the lungs are removed. The lungs are digested in alcoholic KOH, the digest is extracted into ether, and the extract is examined with a scintillation counter. Head, larynx, and trachea are similarly examined in general.

After considerable experience with its application, we find this technique in need of improvement. Coating the filler with ^{14}C-hexadecane or ^{14}C-dotricontane, followed by rolling uniformly radiolabelled cigarettes, provides more reproducible results in animal experiments. The puff-by-puff generation of label is much more regular with uniformly labelled cigarettes. As much as 40% of the label is generated in the last two puffs of a ten-puff cigarette using butt-end deposition. We are examining this technique in detail.

T. H. Handley of the Nuclear and Radiochemistry Group is evaluating neutron-irradiated cigarettes as lung-deposition measurement tools. Preliminary experiments reveal that sufficient quantities of sodium, potassium, and bromine are generated by a single cigarette to allow whole-body counting of exposed hamsters. It may be possible to utilize this approach to obtain measures of both particulate and gas-phase deposition.

ANALYTICAL RESEARCH AND SUPPORT ACTIVITIES IN THE TRANSURANIUM RESEARCH LABORATORY (TRL)

We are engaged in analytical research and support activities in the Transuranium Research Laboratory (TRL). Research activities are aimed at application and development of new techniques for analyzing and studying the properties of the transuranium elements. Support activities involve application of diverse analytical techniques which require the use of TRL facilities.

Redox chemistry of actinides in phosphoric acid. We have investigated the redox chemistry of Pu, Am, Bk, and Cm in strong phosphoric acid solution. Phosphoric acid is an interesting medium for studies of these actinides because their tetravalent oxidation states are stabilized by phosphate.

Previous work by Marcus et al.[22] has shown that it is possible to prepare Am(IV) by electrolytic oxidation in $>7.5\ M\ H_3PO_4$. We have reproduced this work using

22. E. Yanir, M. Givon, and Y. Marcus, "Higher Oxidation States of Americium in Phosphate Solutions," *Inorg. Nucl. Chem. Lett.* **5**, 369 (1969).

controlled-potential oxidation at a potential of +1.6 V vs S.C.E. and verified that Am(IV) can indeed be made in high yield (>95%) in 10 *M* H_3PO_4. An estimate of the amount of Am(IV) prepared was made by coulometric reduction. The absorption spectrum of Am(IV) confirmed the high yield and gave us some new information about the decomposition of Am(IV). The previous work by Marcus showed that Am(IV) is auto-reduced to Am(III). Our studies, however, indicated that appreciable decomposition takes place by disproportionation. Absorption spectra of Am(IV) solutions show the growth of Am(III) and Am(VI); the presence of Am(VI) in the solution can be accounted for only by the disproportionation reaction. No spectral evidence has been obtained yet for the existence of Am(V) in the solution during disproportionation, but it is probably present in small quantities.

The formal potentials of the (III)-(IV) couples of Pu, Am, and Bk were determined in 10- and 15-*M* phosphoric acid. The potentials of these couples are of interest because they allow an extrapolation to be made to couples of heavier actinides (Cm, Cf, and Es) in which the tetravalent state has not been identified in solution. It was found that the formal reduction potentials of the berkelium and plutonium couples in 10- and 15-*M* H_3PO_4 are 0.5 to 0.6 V less than the potential in noncomplexing medium (perchloric acid). Using this difference and the measured potential in 10- and 15-*M* phosphoric acid, we estimate the potential of the Am(III)-(IV) couple in noncomplexing medium to be 2.0 to 2.1 V vs S.C.E. This extrapolated potential is too high for Am(IV) to exist in noncomplexing aqueous media, as has been observed experimentally. Attempts to make Cm(IV) in concentrated phosphoric acid (16 *M*) were unsuccessful. A manuscript describing this work is being prepared.

Investigation of divalent actinides. Work was initiated this year to determine if divalent actinides can be prepared and, if so, to determine the potentials of the actinide (III)-(II) couples in nonaqueous solvents. There has been considerable interest in divalent actinides recently because the stability of this oxidation state seems to increase with atomic number (from 95 to 102). We are studying element 95 (americium) through 100 (einsteinium) with conventional polarographic (DME) techniques using at least microgram quantities of the elements. Acetonitrile is the solvent used in this work.

Initial work has involved a study of the lanthanide elements which serve as "stand-ins" for the actinides. Polarograms were obtained on a number of these elements (Nd, Eu, Yb, Tm, and Sm). Well-defined reduction waves were observed for the reaction Ln(III) → Ln(II) for the elements with divalent states (Eu, Yb, and Sm). Amalgamation waves corresponding to the reactions Ln(III) → Ln(0) or Ln(II) → Ln(0) were observed for all the elements.

We have examined the polarography of two actinides, americium and einsteinium, in detail. Polarograms of millimolar americium show a well-defined reduction wave at $E_{1/2}$ equal to −1.55 V vs aqueous S.C.E. which is due to the amalgamation reaction Am(III) → Am(0). No evidence for a divalent oxidation state was obtained. This conclusion was substantiated by additional experiments which involved quantitative reduction of Am(III) into a mercury pool by controlled-potential electrolysis at −1.85 V, and subsequent oxidation of Am(0) from the pool at −1.0 V vs aqueous S.C.E.

Polarograms were run on two batches of ^{253}Es which contained 47 and 33 μg respectively. We experienced considerable difficulty in dissolving the solid einsteinium perchlorate in acetonitrile and, consequently, were able to obtain only 20 and 12 μg of einsteinium in the polarographic cell. Nevertheless, for both batches we observed a reduction wave at −1.8 to −1.9 V vs aqueous S.C.E. if scans were made immediately. We think this wave results from the reduction of Es(III) or Es(II) to the metal. Because of the high specific activity of ^{253}Es (5.6×10^{10} dpm/μg), the background current increases rapidly, and additional waves appear due to the buildup of radiolysis products in the solution. We do not believe much more can be done with einsteinium using conventional polarography. Possibly radiopolarography can be used. In radiopolarography, mercury drops are collected during electrolysis so that a polarogram of electrodeposited radioactivity vs electrode potential can be constructed. We may examine this technique in the future.

This work is being done with R. D. Baybarz and H. A. Friedman of the Chemical Technology Division.

Spectral and potential studies of berkelium. We have completed work on the aqueous absorption spectra of Bk(III) and Bk(IV) in several media and are publishing this work.[23] In conjunction with these spectral studies, the formal potential of the Bk(IV)-Bk(III) couple was determined by direct potentiometry.[24]

Coulometric titrations with the conducting glass (SnO_2) electrode. We have completed an investigation

23. R. D. Baybarz, J. R. Stokely, and J. R. Peterson, "Absorption Spectra of Bk(III) and Bk(IV) in Several Media," *J. Inorg. Nucl. Chem.* in press.

24. J. R. Stokely, R. D. Baybarz, and J. R. Peterson, "The Formal Potential of the Bk(IV)-Bk(III) Couple in Several Media," *J. Inorg. Nucl. Chem.* in press.

into the use of a conducting glass electrode[25] for controlled-current coulometric titrations. These studies were made with coulometric intermediates that are generated only at highly anodic potentials: Ce(IV) and Ag(II). Exploratory studies established that Ce(IV) in perchloric acid and Ag(II) in nitric acid could be generated with >99% current efficiency at room temperature. This has not been accomplished previously and is possible because of the high oxygen overvoltage on conducting glass.

Further studies were made to determine if Pu(IV) could be titrated directly to Pu(VI) with either Ce(IV) or Ag(II) as intermediates. In both cases, end points for oxidation of Pu(IV) were observed but were not sharp enough to be useful for an analysis. A potential change of only 50 to 75 MV occurred at the end point. The problems associated with these titrations are probably due to the irreversibility of the Pu(IV)-Pu(V) couple, which causes the reaction rates to slow and prevents the indicator electrode system from being well poised. To speed up the reactions, we heated the solutions to about 60°C and titrated Pu(IV) and Pu(III) with Ce(IV) in $HClO_4$. Heating the solution improved the titration considerably. The potential change at the end point is increased to about 300 MV and the titration is fast. Also, starting with Pu(III), we observed an electron change of three corresponding to oxidation from Pu(III) to Pu(VI). Although it is likely that this titration could be made into an analytical procedure, we think the practicality would be marginal because of the inconvenience of heating the solution in a glove box.

Coulometric titrimetry with feedback-controlled electrolysis current. We completed work with this instrument this year. A description of the instrument itself and its performance characteristics is being published.[26] We are also publishing three applications of the titrator.[27-29] The first of these is a method for the simultaneous determination of uranium and iron. In this determination, a cerous sulfate-sulfuric acid electrolyte was used which allowed electrolytic generation of ceric sulfate for sequential titration of U(IV) and Fe(II). Relative precision and accuracy better than 0.05% were found for these determinations with milligram amounts of uranium and iron. We have also applied the titrator to the microdetermination of neodymium[28] and curium.[29] These determinations were based on the complexometric titration of neodymium and curium with EDTA generated from the Hg-EDTA complex by electrolysis. This EDTA titration method is general and could be applied to elements other than these by minor modification in the procedure. Other applications of this instrument may be published later.

This work comprised the doctoral research of J. E. McCracken.

Analytical support in TRL. We continue to provide analytical support for TRL programs. Carbon, hydrogen, and nitrogen analyses were run on a number of solid organometallic compounds of the actinide and lanthanide elements. Neptunium and cobalt were determined in several samples by controlled-potential coulometric titration. A micro-EDTA titration method was developed for lanthanides and used for analysis of samarium compounds.

In other support activities, we were asked by Chemical Technology Division to determine the oxidation states of iodine in aqueous suspension of mercuric oxide which initially contained elemental iodine. A polarographic method was developed for this analysis, and several samples were run. We were asked by the Metals and Ceramics Division to determine the "potential" of a number of aluminum alloys. Zero-current potential measurements were made and reported.

---

25. W. D. Shults et al. "Applications of Conducting Glass Electrodes," *Anal. Chem. Div. Annu. Progr. Rep. Sept. 30, 1970,* ORNL-4636, pp. 4–5.

26. J. E. McCracken, J. C. Guyon, and W. D. Shults, "Instrument for Coulometric Titrimetry with Feedback-Controlled Electrolysis Current," *Chem. Instrum.* in press.

27. J. E. McCracken, J. C. Guyon, and W. D. Shults, "Coulometric Determination of Uranium and Iron-Uranium Mixtures Using Feedback-Controlled Electrolysis Current," *Anal. Chim. Acta* in press.

28. J. E. McCracken, J. C. Guyon, and W. D. Shults, "Coulometric Micro-Determination of Neodymium Using Feedback-Controlled Electrolysis Current," *Anal. Chem.* in press.

29. J. E. McCracken, J. R. Stokely, R. D. Baybarz, C. E. Bemis, Jr., and R. Eby, "Determination of the Half-Lives of ^{246}Cm and ^{248}Cm by Absolute Specific Activity Techniques," *J. Inorg. Nucl. Chem.* in press.

2. Reactor Projects

A. S. Meyer, Group Leader
J. M. Dale, Assistant Group Leader

R. F. Apple
D. L. Manning
M. M. Murray[1]
G. Mamantov[3]
A. L. Travaglini
J. P. Young
F. R. Clayton[2]

ANALYTICAL DEVELOPMENTS FOR THE MOLTEN-SALT REACTOR PROGRAM

In-line analysis. The major portion of the group's activities is directed toward providing analytical methods for the Laboratory's Molten-Salt Reactor Program. In the past, much of our effort was required for the development of analytical methods for immediate analyses of discrete samples submitted by this program. Currently, we are able to devote an increasing fraction of our research and development time towards our ultimate goal of providing in-line methods for the direct determination in process streams of those constituents whose control is essential to safe and efficient operation of breeder reactors, MSBR.

During this period the first opportunity to test our proposed techniques in a flowing salt stream was made possible by H. E. McCoy and J. W. Koger (Metals and Ceramics Division), who provided penetrations for our analytical transducers in a corrosion test loop. Larger engineering test facilities to be operated by the Reactor Division will incorporate similar penetrations. T. R. Mueller made a significant contribution to the application reported in the next section through the design of an improved voltammeter which can be applied to grounded metal containers. This development is described in detail in the Analytical Instrumentation section (Chap. 5).

In-line chemical analysis of molten fluoride salt streams. The first successful in-line analysis of a constituent in a flowing molten fluoride salt stream is now in operation. Automated analyses for U(III) in $LiF\text{-}BeF_2\text{-}ZrF_4\text{-}UF_4$(65.4-29.1-5.0-0.5 mole %) in the NCL-21 thermal convection salt loop are being routinely performed by our PDP-8I computer-voltammeter system.

The NCL-21 loop was filled on July 20 and held under isothermal conditions at about 650°C until July 26, at which time the cold-leg temperature was established and Hastelloy-N specimens were inserted into both the hot and cold leg of the loop for corrosion studies. Analyses of the U(III) concentration of the melt were started on July 22 and were continued on a routine basis until the specimens were removed from the loop on August 23. The original measurements in the melt indicated that about 0.02% of the total uranium was present as U(III). The U(III) concentration showed a gradual increase until a value of 0.05% was reached at 475 hr of loop operation. At this point the rate of formation of U(III) increased, and the concentration reached a value of about 0.15% when the metal specimens were removed from the loop.

No major problems have been encountered with the computer or the voltammeter in this system. Prior to installation on the loop the voltammeter was modified by T. R. Mueller to enable the counter electrode of the system to be used at ground potential. This was done to help suppress any electrical noise that might be contributed to the voltammetric wave by surrounding equipment. However, on occasion, the response from the electrodes has been noisy and erratic thus making it impossible to locate the $E_{1/2}$ of the U(IV) → U(III) reduction wave with any degree of confidence. It appears that this is caused by some material floating on the surface of the melt as it comes in contact with the electrodes. To eliminate this problem a new electrode assembly was designed which allows the salt to be flushed from around the electrode with helium. This assembly was installed in the loop after the metal specimens were removed. The electrode is encased in a half-inch nickel tube, open at the bottom, which protrudes below the surface of the melt. During

1. Special assignment.
2. Student Guest, University of Tennessee, Knoxville.
3. Consultant, Associate Professor of Chemistry, University of Tennessee, Knoxville.

computer-controlled runs the salt enters the electrode compartment from below the melt surface and remains there for the time of measurement. The salt is then flushed from the compartment and the electrode remains in a helium gas envelope when not in use. This appears to keep floating material away from the electrode and also should increase the lifetime of the electrodes or electrode area-defining insulators which may be added at a later time. It was expected that this new assembly would also decrease the surface vibrations around the electrode. It was observed during operation of the analysis system with the original electrode that the derivative voltammogram used to locate the $E_{1/2}$ is highly susceptible to small variations in the height of the melt. If the salt loop is given a small push during a run, the derivative wave oscillates with the wave created on the melt surface. The new assembly does not completely eliminate this effect, but it does dampen the surface wave in the vicinity of the electrode, and equilibrium is restored within a few seconds.

After the system is started the analyses are performed completely unattended through computer control. At initiation of the analyses a signal from a logic circuit (added by us) to the computer starts a timer which causes the pressure in the electrode assembly to be released, and salt enters the electrode compartment. The computer then operates the voltammeter to perform five analyses for U(III). The results, plus some diagnostic information, are printed out on a teletype after each analysis. At the end of the run the average U(III) concentration and standard deviation are calculated and printed out. When the run is completed the timer shuts off. This causes the salt to be flushed from the electrode assembly. At the present time a set of five analyses is made every hour, although the number of analyses and the intervening period may be adjusted in the computer program for the particular needs of the experiment. The computer program that we have modified to fit our particular situation was originally developed by M. T. Kelley and R. W. Stelzner.[4] As an example of the precision of the analysis system, a standard deviation of 2.1% was obtained for the results of the hourly analyses made over a weekend period when the U(III) concentration appeared to be relatively stable.

One useful addition to the analysis system is now being considered which involves the measurement of the salt temperature. During the first month of operation the temperature of the melt where the analysis is made varied from about 610 to 680°C. Because the temperature is needed in the computer program to calculate the U(III) concentration, we plan to monitor an amplified thermocouple output with the computer so that the true temperature at the time of analysis is used in the calculations. It is also planned to investigate the extension of the analysis system to the monitoring of the corrosion products in the melt.

Slotted probe for in-line spectral measurements. A device has been recently developed by Wilks Scientific Corporation called a "Miran" infrared probe.[5] This probe, somewhat similar to a pH electrode in shape, makes use of multiple internal reflections of a light beam of a selected infrared wavelength range to direct a beam of light entering the top through the probe, around the bottom, and again through the probe, exiting finally in a different direction at the top. A detector monitors the exiting beam. Since internally reflected light is subject to absorption by the medium which surrounds the point of these reflections, the multiple-reflected beam is attenuated if the probe is placed in an absorbing solution, thus making absorption measurements possible. In considering the usefulness of such a device it seemed apparent that its utility could be greatly enhanced if one cut a slot of appropriate width in some portion of the internal beam path and in a direction normal to the beam path. With a slot of, perhaps, 0.2 to 1.0 cm in width a probe could be made with a controlled and relatively much longer path length than could be realized with only internal reflection. With a slot, the optical design of the probe could be simplified to require a minimum of two or three internal reflection to direct a beam of light into and out of a cylindrical probe. The base of the probe would be prismatic, conical, or perhaps hemispherical, with the slot in the apex of the prism or on the side of any of the shapes. By incorporating a suitable light source and detector with a suitable slotted optical probe, absorbance measurements could be made in any region of the electromagnetic spectrum. The device could also be used for other optical measurements such as turbidity. The design of this probe would lend itself to a sealable insertion into a pool of liquid or a flowing stream. It should be remembered that internal reflections can occur only when the index of refraction (η) of the medium through which the light is traveling (probe) is larger than η of the surrounding medium (the liquid

4. M. T. Kelley, R. W. Stelzner, and D. L. Manning, "Computer Operated Voltammetric U(IV)/U(III) Ratio Determination," *MSR Program Semiannu. Progr. Rep. Aug. 31, 1969*, ORNL-4449, p. 157.

5. Wilks Scientific Corporation, South Norwalk, Connecticut, bulletin M1-1-10M, July 1971.

sample). Over the common range of values of η encountered, a difference of about 0.5 in the two values of η seems adequate; however, through the use of a specially designed probe bottom a smaller difference may be satisfactory.

By the use of a probe made from plexiglass, solutions of a blue dye (copper phthalocyanine sulphonate) placed in the slot, we collected absorbance data and compared them with similar data obtained from the solution with a Cary spectrophotometer, model 14 M. The light source used with the probe was a 100-μW He-Ne laser line at 633 nm, and the detector was a "Densichron" phototube detector. The comparison is shown in Table 2.1.

Table 2.1. Absorbance of copper phthalocyanine solution

Sample	Absorbance/1 cm	
	Cary spectrophotometer	Slotted probe
H_2O	0.0	0.0
1	0.188	0.187
2	0.382	0.384

In-line applications for spectral analysis by means of a slotted optical probe appear numerous. Most, but not all, of these applications would be in spectral analysis of components in process streams or in monitoring the degree of mixing and/or reaction at the intersection of several process streams. It would also be useful as a continuous in-line monitor for clarity or, conversely, the degree of dispersion or homogenization of immiscible phases. For molten-salt reactor applications, it is possible that an LaF_3 slotted probe would be useful in monitoring protons by means of the BF_3OH^- absorption in molten $NaBF_4$; the existence of such an absorption is reported later in this chapter. With a diamond-slotted probe, several spectral measurements could be made directly in MSBR circulating fuel. Suitable laser light sources are available for either of these applications; the refractive index of either material is quite adequate for proper internal reflections within the probe.

In-line determination of hydrolysis products in $NaBF_4$ cover gas. Earlier analytical studies[6,7] on the off-gas of the $NaBF_4$ circulating test loop have shown that water can be present in significant quantities as hydrolysis products of BF_3 in the cover gas of the proposed MSBR coolant salt. An in-line method for the measurement of this "water" is needed for the detection of leaks in steam generators, the investigation of the role of the cover gas in the containment of tritium, the development of methods for the removal of the corrosive hydrolysis products before they can reach sensitive components of the flow control system, and studies of coolant reprocessing systems.

Conventional methods for the determination of water in inert gases are subject to interference from BF_3 and possibly HF in the cover gas. At the suggestion of Dunlap Scott of the Reactor Division we are investigating "dewpoint techniques" for the determination of these hydrolysis products. We anticipate that this empirical technique may require extensive calibrations because the condensation temperature of a given concentration of "water" may well be influenced by the partial pressures of both BF_3 and HF.

In feasibility studies we are using a simulated cover gas prepared by bubbling mixtures of BF_3 and helium through a saturator that originally contains water. When a steady state is reached, the saturator contains liquid hydrates of BF_3, and the exit gas contains hydrolysis products in relatively low concentrations. By direct Karl Fischer titration (subject to significant interference from BF_3) we have estimated "water" concentrations of about 200 ppm at a saturator temperature of 45°C and 3000 ppm at 75°C. In our experiments the dewpoint detector is either contained in the same oven that maintains the saturator temperature or connected to the oven through a short nickel tube that is heated above the saturator temperature. Under these conditions the observed dewpoint should coincide with the temperature of the saturator.

Our initial approach was to attempt to detect the formation of a conductive film of BF_3 hydrates by measuring the resistance between closely spaced platinum electrodes inserted in the gas stream. The electrodes are mounted through an insulator (temperature controlled by an air stream) which provides a surface for the condensation of the hydrolysis products. We have used teflon, teflon with its surface modified by treatment with a sodium solution, and high-fired alumina as insulating materials. Measurements on alumina appear more consistent, but this may be the result of improved electrical instrumentation used in the later tests. This technique gives definite indication of the condensation of a film of hydrates. When the probe (electrode assembly) is about 10°C above the saturated cover gas temperature its resistance is about 500°K for

6. R. F. Apple and A. S. Meyer, "Determination of Contaminants in the Blanket Gas of $NaBF_4$ Tests," *MSR Program Semiannu. Progr. Rep. Feb. 28, 1969,* ORNL-4396, p. 207.

7. R. F. Apple, J. M. Dale, L. J. Brady, and A. S. Meyer, "Analytical Studies of $NaBF_4$ Coolant Salt," *MSR Program Semiannu. Progr. Rep. Aug. 31, 1970,* ORNL-4622, p. 116.

20-mil electrodes spaced about $^1/_{16}$ in. apart. The resistance falls to about 300 ohms when the temperature is reduced to 10°C below that of the cover gas. In its present state the electrical probe does not appear to be practical because of its extremely slow response. Several hours are required to approach these equilibrium resistance values.

We are now testing an optical method for dewpoint detection. The design of our optical cell is based on a suggestion of S. S. Kirslis, of the Reactor Chemistry Division. The cell utilizes a cylindrical copper block with one face polished and gold plated. This polished face is sealed into an observation chamber through which the cover gas sample flows. The external end of the copper block is penetrated to near the polished surface by holes for cooling air and a thermocouple. The inlet stream is directed against the polished surface, and films of condensate are observed through a sapphire window. With this cell, condensation is observed within about 15 min after the block is cooled to the dewpoint. Over the range of 45 to 75°C, dewpoints are observed at about 1°C below the temperature of the cover gas. It is likely that this difference reflects the difficulty in detecting the initial formation of a film of condensate visually. With commercial instruments (not necessarily applicable to our corrosive gases), dewpoints can be measured to a few tenths of a degree. A complete evaluation of the precision and accuracy of the method must await calibration using gas streams whose absolute water content is determined by some alternate method. The Karl Fischer titration, applied after the water is separated from BF_3 and HF by azeotropic distillation with pyridine, appears to be the most promising method. For the quantities of water involved it will be necessary to perform the titrations with coulometrically generated reagents.[8] D. J. Fisher and T. R. Mueller have designed an improved coulometric titrator for this application. The instrument has been fabricated and is now being tested. Initial measurements on standards have shown about 1% reproducibility for the titration of milligram quantities of water. With minor modifications in the electronics and the design of the titration cell we expect to achieve similar precision in the titration of 100-μg quantities. This apparatus, together with its metal azeotropic still, will be sufficiently portable to permit on-site analysis of water in engineering streams.

8. A. S. Meyer and C. M. Boyd, "Determination of Water with Coulometrically Generated Karl Fischer Reagent," *Anal. Chem.* 31, 215 (1959).

A preliminary estimate of the potential sensitivity of the optical dewpoint method has been made by a dilution technique. When the concentration of hydrolysis products in a stream saturated at 59°C (estimated "water" concentration, 1000 ppm) was diluted fivefold with a gas stream that contained the same concentration of BF_3, the observed dewpoint decreased by 24°C. This response is roughly equivalent to that of uncomplexed water at room temperature. From these results we estimate the precision of the method to be about 10% for visual detection with perhaps a fivefold improvement with automatic photometric instruments. Commercial photometric instruments would require the replacement of their conventional glass optics.

We believe that the optical cell will prove useful for various development studies and may provide information on the gas phase equilibria between H_2O and BF_3. In application to pumped systems, however, it will probably be subject to interference from oil which enters the system through the shaft seals. We will, therefore, continue development on the resistance method of dewpoint detection, which should be unresponsive to organic films. We will test other insulating materials and electrode configurations.

Analytical studies of $NaBF_4$ coolant salt. Because of its physical and nuclear properties and low cost, a eutectic mixture of $NaBF_4$ and NaF (92-8 mole %) has been selected as the probable coolant salt for the MSBE. This salt appears to be somewhat more corrosive than the LiF-BeF_4 coolant used in the MSRE, and in-line techniques for monitoring corrosion products in engineering test facilities will be needed next year. This coolant may also aid in the containment of the tritium that is generated during molten-salt reactor operation. If a significant concentration of some protonated species can be maintained in the coolant, its exchange with tritium diffusing through the heat exchanger tubes could trap the tritium for later removal by some reprocessing system. This would prevent its transfer to the steam-generating system, where containment problems would be multiplied. A stable concentration of only a few parts per million of protons is required to make this containment scheme feasible.

In view of the above considerations we have concentrated our research work on the coolant salt with particular emphasis on the analysis and fundamental chemistry of protonated species.

Spectrophotometric study of protonated species in $NaBF_4$. In a cooperative effort with other groups of our division and personnel from other divisions, particularly J. B. Bates of the Director's Division and H. W. Kohn of Reactor Chemistry Division, we have proved that

protons can exist as stable entities in quiescent melts of $NaBF_4$ or the eutectic $NaBF_4$-NaF (92-8 mole %) at temperatures up to at least 500°C. In such melts, protons exist as the BF_3OH^- ion. There are indications that other protonated species also exist, but the evidence for other species is not yet complete. The presence and identity of the BF_3OH^- was proved by near-infrared spectroscopy of molten $NaBF_4$ and by infrared spectroscopy of pellets made from $NaBF_4$ or NaF-$NaBF_4$.[9] The presence and identity of BF_3OD^- ion was proved by near-infrared and infrared spectra of molten $NaBF_4$, and, again, by infrared pellet techniques. The BF_3OH^- ion exhibits a sharp and very intense fundamental absorption peak at 3641 cm^{-1}; BF_3OD^- exhibits a similar sharp peak at 2688 cm^{-1}. The same BF_3OH^- spectrum is observed if either NaOH, Na_2HPO_4, or H_3BO_3 is added to the melt. Any of these compounds react with the melt to form BF_3OH^- as a product.

Near-infrared spectra of molten $NaBF_4$ were measured with SiO_2 cells and a high-temperature furnace described previously. We wanted to obtain a direct measurement of the OH absorption in molten $NaBF_4$ as a function of time. The bands due to overtones of OH disappear from the near-infrared spectrum of the melt in a matter of hours. However, pellets pressed from the frozen salt always showed the sharp absorption at 3641 cm^{-1}. These two observations can be reconciled if we assume that a small, but unknown, concentration of BF_3OH^- is in equilibrium with $NaBF_4$. Indeed, the rate of decrease of the near-infrared OH peak does not appear to follow simple first-order kinetics. Therefore, competing, consecutive, or higher-order processes must be involved. For measurements in the infrared region, samples of molten $NaBF_4$ were spiked with D_3BO_3 because it was possible to study only the absorption by OD rather than that by OH silica. Fused silica exhibits a strong OH absorption band but is very transparent in the region of OD (or BF_3OD^-) absorption.

The infrared spectrum of a molten $NaBF_4$-B_3BO_3 solution in the 2700-cm^{-1} region at about 425°C consists of a broad OD band centered at about 2690 cm^{-1}, in excellent agreement with the frequency of the sharp band observed at 2688 cm^{-1} in the pellet spectra. Under our experimental conditions, the OD absorption in the melt was stable even in the presence of added INOR-8 but unstable in the presence of pure chromium metal. Since it was demonstrated that BF_3OD^- can be seen spectrally in the melt, it is logical to assume that BF_3OH^- could also be seen. However, to gain further information, we have designed an apparatus which does not use SiO_2 as a window material and it is being fabricated for use in further studies on molten $NaBF_4$.

From the above results it was obvious that BF_3OH^- could be detected in fluoroborate salts. However, the detection limits and the quantitative nature of such a determination were unknown.

It was found that pellets pressed from mixtures of $NaBF_3OH$ and $NaBF_4$ ground in a microball mill yielded infrared spectra in which the absorbance of the $NaBF_3OH$ peak at 3641 cm^{-1} varies linearly with the added concentration of this species. In a 45-mg pressed pellet the resultant factor is 63 ppm of hydrogen per absorbance unit. The method is very sensitive; much less than 1 ppm of hydrogen could be detected. We assume that the method will be equally sensitive, on a molar basis, to deuterium.

Although a good calibration curve was obtained, the method of preparing the samples did not guarantee that these "standards" were of known hydrogen concentration. If some of the added BF_3OH^- were lost in the grinding and pressing, or, rather, if it were converted to some species which did not exhibit the sharp peak at 3641 cm^{-1}, the experimentally observed factor would be higher than the actual factor. Indeed, one such effect was observed in high concentrations of $NaBF_3OH$ and in mixtures that were ground for too short a time. Under such conditions, rather than one sharp peak, two sharp peaks are observed in the spectrum of the pellets at 3641 and 3621 cm^{-1}. The former peak is as seen for BF_3OH^- in solid solution in $NaBF_4$. The latter peak is at the same position as the BF_3OH^- peak in pure $NaBF_3OH$. On mild heating of the pellets, 70°C for 18 hr, the peak at 3621 cm^{-1} disappears with little, if any, enhancement of the 3641-cm^{-1} peak. Apparently when these two peaks are observed, two kinds of BF_3OH^- are present in the $NaBF_4$ matrix, a bound or dissolved species and an undissolved and probably segregated species. On heating the latter species it decomposes to form water and some form of oxyfluoroborate.

From the above it is seen that one particular kind of nondissolved OH species can be identified. It is reasonable to assume that all OH species could be observed by their absorbance in this region of the IR spectrum so that their presence would be detected. Rather than rely on this assumption, however, an independent method involving isotopic dilution of hydrogen with deuterium was devised so that the spectrally observed BF_3OH, or hydrogen, concentrations could be compared with

9. J. B. Bates, J. P. Young, M. M. Murray, H. W. Kohn, and G. E. Boyd, "Stability and Isotopic Exchange Reactions of BF_3OH^- Ion in Molten and Solid $NaBF_4$ and NaF-$NaBF_4$ Eutectics," *J. Inorg. Nucl. Chem.* in press (1971).

hydrogen concentrations found by mass spectrometry. If one allows a quantity of hydrogen in a particular species to react with an approximately equal amount of deuterium as a volume of D_2 gas in a sealed system, at equilibrium one should find a large and proportionate amount of hydrogen in the D_2 gas. Such an equilibration was studied by allowing several ~1-g molten samples of hydrogen-containing $NaBF_4$ or NaF-$NaBF_4$ to react with a known amount of D_2 gas in sealed Pyrex ampuls for various periods of time at 440°C. The proton concentration of the original salts was determined by IR pellet technique, using the factor derived from the ground $NaBF_3OH$-$NaBF_4$ mixtures. The results of the comparison are shown in Table 2.2.

Table 2.2. Determination of hydrogen in $NaBF_4$ samples by infrared and mass spectral methods

Sample	Hydrogen found (ppm)	
	Mass spectrometry	IR
Eutectic	9.9[a]	20
	21.6[b]	24
	21.7[b]	18
$NaBF_4$	7.7[b]	6.4

[a]16-hr-D_2 equilibration.

[b]48-hr-D_2 equilibration.

The correlation of the results is quite gratifying, but there is an attendant high blank correction in the mass spectrometric results. We have found that the blank correction, equivalent to 10 to 12 μg of hydrogen, is due to Pyrex; the mechanism of the exchange is as yet unknown. The blank is reduced at least by an order of magnitude if SiO_2 ampuls are used. We plan further isotopic exchange studies of fluoroborate melts contained in SiO_2 ampuls.

Most of the fluoroborate samples previously melted yield proton concentrations between 20 and 30 ppm. The sample showing 7 ppm in Table 2.2 had never been melted. When this sample is melted under what is thought to be inert conditions the hydrogen content increased two- to threefold. This apparent affinity for hydrogen, or more correctly OH since the species being observed is BF_3OH^-, suggests the possibility of determining H^+ or OH^- in compatible salts by melting them with $NaBF_4$ and subsequently obtaining infrared spectra of the pelletized solids. The isotopic dilution method devised to check the infrared method also provides a valuable analytical tool for determining low concentrations of H^+ or OH. Both of these alternatives are being pursued as general methods for H^+, OH^-, and perhaps O^{2-} in salts.

Voltammetric and electrolysis studies of hydroxide ion in molten $NaBF_4$. Experiments were conducted to observe the voltammetric behavior of hydroxide ion in molten $NaBF_4$ at approximately 400°C. Hydroxide added as NaOH or $NaBF_3OH$ (200 to 800 mg per 80 g melt) produced an increase in current over background on the voltammograms over the potential range ~ −0.5 to −1.0 V vs a platinum QRE. Considerable noise was encountered, which is characteristic of bubble formation, at the electrode surface. This is not surprising since hydrogen is evolved when OH^- is reduced at the indicator electrode ($OH^- + 1e \rightarrow O^{2-} + \frac{1}{2} H_2$). After a few hours, however, the current returned essentially to background level. This is evidence that appreciable concentrations of hydroxide ion are not stable in $NaBF_4$ melts at least under our experimental conditions. Voltammetry does not appear applicable to low levels of hydroxide ion since background voltammograms do not reveal any wave that can be related specifically to OH reduction. By purposely increasing the OH concentration, however, one can observe the potential range at which this substance is reduced.

We are now testing a palladium tube electrode so that the hydrogen formed at the electrode surface could diffuse through the palladium into an evacuated volume and be observed as a pressure change of the system. This would appear to have two distinct advantages: it would be specific for hydrogen and would allow for increased sensitivity through controlled potential electrolysis. Also the separated hydrogen could be transferred to an internal proportional counter for the measurement of its tritium content. The technique could thus be adapted to an in-line method for $^3H/H$ ratios in the reactor coolant.

To test the feasibility of this technique, a melt was prepared of commercial nonrecrystallized $NaBF_4$ (estimated proton level 20 to 40 ppm). A palladium tube electrode $\frac{1}{16}$ in. diam, 0.004 in. wall, 2 in. long was closed at one end and fastened to a $\frac{1}{8}$-in. nickel tube riser. The electrode was immersed to a depth of ~1 cm. The evacuated volume associated with the electrode assembly is of the order of 10 cc. Upon applying a negative voltage step to the electrode, a pressure increase was observed as the hydrogen, formed at the surface of the electrode, diffused through the palladium into the evacuated volume. Initially the pressure increased from background (<2 μ) to ~100 μ upon applying a 1-V step for 1 min. This is an indication that we were definitely observing the reduction of protonic species present in the melt. After about 48 hr, however,

the pressure measurements had decreased to ~30 μ for the same potential step and time of electrolysis. This agrees with previous voltammetric observations which seemed to indicate that appreciable concentrations of OH are not stable in $NaBF_4$ melts under our experimental conditions. An addition of ~500 mg of $NaBF_3OH$ to the molten $NaBF_4$ resulted in an increase in the pressure measurements to about 160 μ.

The results are encouraging. It is believed that the electrolysis technique at palladium will result in a specific method for detecting protonic species in fluoroborate melts. We plan to continue these experiments. However, to eliminate any effect of silica and also to achieve higher temperatures, further experiments will be conducted in a nickel cell enclosure.

Electroanalytical studies in the $NaBF_4$ coolant salt. Voltammetric studies are in progress in molten $NaBF_4$ at ~420°C. Platinum and graphite cells are used to contain the melt which is enclosed in a Pyrex jacket to maintain an inert atmosphere. A cover gas of helium was maintained under static conditions at a pressure of approximately 4 psig. Voltammograms were recorded at platinum and pyrolytic indicator electrodes (~0.1 cm^2 area) vs a platinum quasi-reference electrode. The platinum quasi-reference is supposedly poised at the equilibrium potential of the melt. Background voltammograms recorded on Harshaw $NaBF_4$ as received showed an iron impurity wave at ~ −0.4 V vs the platinum quasi-reference. The concentration of iron calculated from the voltammogram agreed well with the chemical analysis of ~200 ppm. Reduction waves that could be attributed to the reduction of nickel or chromium were not observed. Chemical analyses gave 16 and 6 ppm of nickel and chromium respectively. These are below practical limits for well-defined voltammograms. We have not yet investigated stripping techniques for these ions. A small amount of iron(III) was added to the melt to gain some idea of the potential of the $Fe^{3+} \rightarrow Fe^{2+}$ reduction. This wave was observed at a half-wave potential of ~ −0.2 V. It appears that the iron impurity in the $NaBF_4$ is predominantly Fe(II). On platinum, the melt exhibits a cathodic current limit at ~ −1.2 V which appears to be due to the reduction of boron, while the anodic limit appears at ~ +1.8 V due to the dissolution of the platinum.

The magnitude of the iron impurity was significantly decreased by recrystallizing the $NaBF_4$ from 0.1 *M* HF as suggested by L. O. Gilpatrick of the Reactor Chemistry Division. The iron was decreased from ~200 to 20 ppm with one recrystallization. A reasonably well defined reduction wave at this level was observed.

A voltammetric study is in progress on titanium(IV) added as K_2TiF_6 to molten $NaBF_4$. Melts of Ti(IV) in $NaBF_4$ appear to be stable in graphite. The $Ti^{4+} \rightarrow Ti^{3+}$ reduction wave is observed at ~ −0.5 V. It may prove difficult to separate the reduction waves of Ti(IV) and Fe(II). A $Ti^{3+} \rightarrow Ti^0$ reduction wave is not observed in $NaBF_4$ because the cathodic limit of the melt occurs first.

Spectral studies in molten $NaBF_4$. It was observed in earlier studies of $NaBF_4$ melts that many salts, such as some transition-metal fluorides, rare-earth fluorides, and actinide fluorides, did not possess a sufficiently high solubility to be detected spectrally. For this reason it was thought that spectral measurements might not be of much value for determinations of solute species in this proposed coolant salt. Furthermore, earlier spectral data, on what turned out to be impure NaF-$NaBF_4$, indicated that the melt absorbed strongly in the ultraviolet below 300 nm. If $NaBF_4$ is purified, depending on the method of purification, the salt is quite transparent even at wavelengths of 200 nm or less. Based on chemical analyses, this increase in transparency is caused by the removal of Fe(II) and/or Fe(III) from the salt. With such purified $NaBF_4$ or NaF-$NaBF_4$ melts, one can detect or determine small concentrations of a number of different dissolved solute species due to their very sensitive (allowed) absorptions which occur in the ultraviolet region of the spectrum. Absorption peaks, as such, are generally not seen. It may well be that these peaks occur at wavelengths below the apparent ultraviolet cutoff of the solvent, 195 nm; cutoff is defined as that wavelength where the absorbance of the solution is 1.0 unit higher than its absorbance in its most transparent region of the ultraviolet spectrum. Many dissolved chemical species have strong ultraviolet absorption; therefore, many interferences are possible in a general spectral method of this sort. The lack of solubility of many solute species in molten $NaBF_4$, however, eliminates some of the interferences. One immediate result of these observations was that the extent of melt purification could be followed by the shift of the optical cutoff of $NaBF_4$ melts to lower wavelengths, finally reaching 195 nm. The addition of small amounts of Fe(II) or Fe(III) caused the cutoff to shift to higher wavelengths; for example, 60 ppm Fe(II) in the melt shifts the cutoff to 260 nm.

It can be seen in Table 2.3 that two solutes, FeF_2 and UO_2F_2, were sufficiently soluble in $NaBF_4$ so that other characteristic absorption peaks were seen. Ferrous iron was just soluble enough, 470 ppm, to detect its *d–d* transition at 1000 nm. The calculated molar

Table 2.3. Spectral response of solute species in molten $NaBF_4$

Spectral cell, 1 cm SiO_2; temperature, 425°C

Solute	Concentration (ppm)	Cutoff[a] (nm)	Absorption peak λ (nm)	Absorption peak Molar absorptivity (M^{-1} cm^{-1})
None		195		
Fe^{2+}[b]	60	260	1000	~2
Fe^{3+}	Trace	300		
Ti^{4+}	150	254		
UO_2^{2+}[b]	1200	324	413	8

[a]Defined in text.

[b]Solute dissolved sufficiently to see other absorption peaks.

absorptivity (α_m) can only be considered approximate but is in fairly good agreement with α_m of 4.5, the sensitivity of Fe(II) in molten LiF-BeF_2 at 550°C.[10] The α_m of 8 for UO_2^{2+} is likewise in good agreement with the range of values reported for UO_2^{2+} in H_2O.[11] A surprising observation is the low solubility of the oxycation (UO_2^{2+}). Many other oxyanions were found to be quite soluble in molten $NaBF_4$ and exhibit a normal spectrum, for example, $Cr_2O_7^{2-}$, VO_4^{3-}, NO_2^-, and, of course, BF_3OH^-.

Nitrite exhibits a peak at 350 nm in molten $NaBF_4$; the sensitivity of this absorption is not accurately known, but the peak is sufficiently sensitive to detect NO_2^- at concentrations less than 1000 ppm. If further consideration is given to the use of a nitrate-nitrite secondary coolant for the MSBR, the results of this spectral study of NO_2^- can be applied to a possible determination of the secondary coolant in molten NaF-$NaBF_4$.

Analytical research in other molten fluoride solvents. A continuing effort in our group is the investigation of the chemical properties of solute species in molten fluoride solvents. Studies such as these provide information for decisions concerning the direction of further efforts to solve analytical chemical problems of the MSBE.

Reference electrode for fluoride melts. In cooperation with H. R. Bronstein of the Chemistry Division, we have developed an Ni/NiF_2 reference electrode which utilizes the unique properties of a single-crystal lanthanum trifluoride membrane, namely, negligible solubility and virtually 100% current transport by fluoride ions as the bridging ionic conductor between the two half-cells. The electrode was successfully used both to make electroanalytical measurements and to obtain thermodynamic data in certain fluoride melts of interest to the Molten-Salt Breeder Reactor Program. A paper describing this work was submitted for publication in the *Journal of the Electrochemical Society.*

Electroanalytical studies of Ni(II) in molten fluoride fuel solvent. Further voltammetric and chronopotentiometric studies were made at fast scan rates and short transition times on Ni(II) in molten LiF-BeF_2-ZrF_4 at 500°C. The diffusion coefficient for Ni(II) was evaluated by the two methods. For linear sweep voltammetry, the equation for the reversible deposition of an insoluble substance if $i_p = 2.28 \times 10^5\ n^{3/2}\ AD^{1/2}\ Cv^{1/2}$, where i_p = peak current (μA), n = electron change, C = concentration (mM), A = electrode area (cm^2), D = diffusion coefficient (cm^2/sec), and v = scan rate (volts/sec). The voltammograms were recorded at a pyrolytic graphite electrode (PGE) with an area of 0.1 cm^2 and at a concentration of nickel of 6.7 mM. Plots of i_p vs $v^{1/2}$ were linear to 50 V/sec. From the slope of the line, the value of D is 1.07×10^{-6} cm^2/sec. Although an unsheathed pyrolytic graphite electrode was used (r_0 = 0.05 cm), the equation for linear diffusion can be utilized as pointed out by Delahay,[12] since the quantity $(1/r_0)(D/nv)^{1/2}$ is less than about 0.2 at the scan rates employed.

Chronopotentiograms were recorded at the PGE at current densities ranging from 5 to 30 mA/cm^2. Corresponding transition times varied from 0.76 to 0.028 sec. Within experimental error, the $i_0\tau^{1/2}$ product was constant at $4.69 \pm 0.25 \times 10^{-4}$ A cm^{-2} sec$^{1/2}$. From the Sand equation

$$i_0\tau^{1/2} = \frac{\pi^{1/2}F}{2} n D^{1/2}C ,$$

where i_0 = current density, τ = transition time, F = Faraday, and at an Ni(II) concentration of 2.6×10^{-5} moles/cm^3, an average D value of 1.05×10^{-6} cm^2/sec was obtained. This is in excellent agreement with the value obtained from voltammetry. Within the precision of the measurements, the same results were obtained using a platinum indicator electrode.

Ni(II), when reduced at platinum, did not appear to form an Ni-Pt surface alloy under the experimental

10. J. P. Young, "Absorption Spectra of Several 3*d* Transition Metal Ions in Molten Fluoride Solution," *Inorg. Chem.* 8, 825 (1969).

11. J. T. Bell and R. E. Biggers, "The Absorption Spectrum of the Uranyl Ion in Perchlorate Media," *J. Mol. Spectry.* 18, 247 (1965).

12. Paul Delahay, *New Instrumental Methods in Electrochemistry*, pp. 115–46. Interscience, New York, 1954.

conditions employed. Log $(i_p - i)$ vs E plots were linear over the range ~0.5 to 0.9 i_p with the theoretical slope for a two-electron change.[13] From the chronopotentiograms the ratio of forward to reverse transition times was approximately unity; this is in agreement with the predicted value for the reversible deposition of an insoluble substance.[14]

Spectral studies in molten fluoride media. As a result of the graduate research of F. L. Whiting it was apparent that oxygenated solute species can indeed exist in fluoride melts,[15] and the kinds of such species are perhaps much more numerous than had previously been expected. During this period, various spectral studies of these oxygenated species in molten fluoride media were carried out. One of the end results of the study of oxyanions culminated in the cooperative spectral study of the reaction of OH^- and OD^- with molten $NaBF_4$.

Because of the chromate (CrO_4^{2-}) formation in LiF-NaF-KF, we undertook the generation and spectral studies of chromate in other melts. It was found that CrO_4^{2-} dissolved in LiF-BeF_2 melts. The spectrum is altered from that seen in LiF-NaF-KF, and it is believed that the dissolved species is dichromate ($Cr_2O_7^{2-}$). Again, reduced chromium can be oxidized with MnF_3 in the presence of oxide ion to $Cr_2O_7^{2-}$. Chromate dissolves in molten NaF-$NaBF_4$, and the spectrum indicates that $Cr_2O_7^{2-}$ is the resultant species. It has not been possible, however, to generate $Cr_2O_7^{2-}$ in $NaBF_4$ by the oxidation of chromium in the presence of added oxides. The nonreactivity could result from several causes, such as insolubility of chromium fluoride or the absence of free oxide ion via the formation of some kind of oxyfluoroborate.

The ultimate sensitivity of any possible spectral determination of O^{2-} in molten salts is limited by the molar absorptivity of the resultant oxidized oxyanion. The molar absorptivity of the most intense peak of CrO_4^{2-}, at 372 nm in molten LiF-NaF-KF, is approximately 4000 M^{-1} cm^{-1} at 500°C. The molar absorptivity of the isoelectronic $VO4^{3-}$ at its peak maximum, 272 nm, should be near 8000 M^{-1} cm^{-1}; VO_4^{3-} is soluble in molten NaF-$NaBF_4$ or LiF-NaF-KF and exhibits the expected spectrum. The oxidation of lower-valent vanadium to VO_4^{3-} has yet to be studied.

It was also observed that $NaNO_2$ dissolves in LiF-NaF-KF; the spectrum of NO_2^- in this melt is quite similar to that seen in other molten salts or aqueous solutions.

ANALYSIS OF NATURAL GAS SAMPLES

Using separation and counting techniques reported earlier, we analyzed samples taken at various stages of the flaring of the Rulison Well. Our results for both the chemical composition and the gaseous radionuclides derived from the test shot were in good agreement with analyses of other laboratories, particularly Lawrence Radiation Laboratory, Livermore, California.

The Laboratory, in cooperation with El Paso Natural Gas Co., has performed an experiment to study the disposition of gaseous activity during the processing of gas from wells promoted by nuclear explosions. The experiment was performed under the direction of Minton J. Kelly of Reactor Chemistry Division with the Analytical Chemistry Division participating in the planning of the test and performing analyses on the samples.

Natural gas from the "gas buggy" well was transported from the well to a stripping plant at Barnhardt, Texas, where it was injected into the plant input stream over an 8-hr period. More than 100 samples were taken over a 30-hr period; this included inlet and exit gases, low-pressure gasolines and oils, high-pressure propane, butane oils, column product and makeup tank fractions, and environmental samples.

The results of our analyses are consistent with the experiment. Concentrations of tritium found in the environmental samples fell within contours that are reasonable for the points of release and wind direction, and the tritium in the hydrocarbons follows smooth profiles thus indicating the passage of the gas buggy product through the plant. An ORNL report on this experiment is being prepared.

13. Gleb Mamantov, D. L. Manning, and J. M. Dale, "Reversible Deposition of Metals on Solid Electrodes by Voltammetry with Linearly Varying Potential," *J. Electroanal. Chem.* 9, 253 (1965).

14. W. H. Reinmuth, "Chronopotentiometric Potential-Time Curves and Their Interpretation," *Anal. Chem.* 32, 1514 (1960).

15. A. S. Meyer et al., "Studies of Unusual Oxidation States of Ions in Molten Fluoride Media," *Anal. Chem. Div. Annu. Progr. Rep. Sept. 30, 1970,* ORNL-4636, p. 11.

3. Analytical Biochemistry

Gerald Goldstein, Group Leader

J. E. Attrill
W. C. Butts[1]
J. E. Caton
I. B. Rubin
M. L. Moss[2]

BIOLOGICAL MACROMOLECULAR SEPARATIONS TECHNOLOGY PROJECT

Optimization of tRNA assay conditions. We have completed work on the optimization of conditions for the assay of *E. coli* tRNAs using statistically designed experiments.[3] We have also carried out some studies for the optimization of assay conditions for calf liver tRNAs. Sufficiently purified $tRNA^{Phe}$ was available so that optimization studies on this compound by means of statistically designed experiments were completed. The conditions found were very similar to those reported previously for this tRNA from *E. coli.* However, the buffer HEPES at pH 8 is used rather than glycine at pH 8.4. For some other partially purified tRNAs, it was possible to determine the optimum concentrations of magnesium and adenosinetriphosphate to be used. In addition we have adapted a method for formylmethionine-accepting tRNA ($tRNA^{fme}$), from a procedure suggested by Schofield,[4] for use in the Bioanalytical Service Laboratory. This procedure eliminates the need to prepare ^{14}C-labeled 5,10-methenyltetrahydrofolic acid which had been used in the previous procedure. The formylation is carried out with folinic acid, and the difference between the formylated and nonformylated constituents is determined by hydrolysis of the latter species by a copper sulfate solution. The assay mixture is the same as that used for $tRNA^{Met}$ with the addition of 1 nmole of folinic acid (calcium salt) per assay.

Gel electrophoresis of ribonucleic acids. A technique was developed for the preparation of 2.5 to 12% polyacrylamide gradient gels and their use in the separation of total RNA preparations. All RNAs from 4 S to 28 S can be separated on a single gel with good resolution. The RNA bands are stained with Pyronin Y and scanned for quantitative analysis. A paper describing this work has been published.[5]

Analysis of histones. As part of the Macromolecular Separations Project, attempts have been made to fractionate calf thymus histones by means of column chromatography. The most common method for analysis of histone mixtures is by gel electrophoresis. The preliminary work on this procedure was reported in the last annual report. We re-evaluated this preliminary work and have found these conditions to be satisfactory. In addition we studied the use of gradient and step gels ranging from 8 to 20% acrylamide and have found no improvement over the 15% gel. A urea concentration of 1.5 *M* in the gel is as good as the higher concentrations normally used. Several methods of staining using Coomassie blue and Naphthol blue black were studied; no one staining procedure was found to be definitively better than another, although for qualitative purposes, staining overnight with 0.1% Naphthol blue black in methanol-acetic acid-water (5:4:1) is probably best. Along with whole histone samples and chromatographic fractions, we have studied the commercially available histone fractions F1, F2a, F2b, and F3, and have found each of these to be heterogeneous. The bands resulting from electrophoresis overlap sufficiently so that it is impossible to identify individual constituents in mixtures except the slow band of F1.

We have also examined the whole histones and the histone fractions by ultraviolet spectrophotometry at 230 and 280 nm and by turbidity at 400 nm. In both

1. On leave of absence. Present address, Biochemistry Department, University of Washington, Seattle, Washington.

2. Special assignment.

3. I. B. Rubin, T. J. Mitchell, and Gerald Goldstein, "A Program of Statistical Designs for Optimizing Specific Transfer Ribonucleic Acid Assay Conditions," *Anal. Chem.* 43, 717 (1971).

4. P. Schofield, "Isolation and Some Properties of Methionine Transfer Ribonucleic Acid from *Escherichia coli,*" *Biochemistry* 9, 1694 (1970).

5. J. E. Caton and Gerald Goldstein, "Electrophoresis of Ribonucleic Acids on Polyacrylamide Gel Gradients," *Anal. Biochem.* 42, 14 (1971).

methods the F1 fraction had only about half the absorbance of the average of the other three, while the F2a and F2b fractions differed by about 20%. The whole histones were between the extremes. Urea, which is normally present in the chromatographic fractions, interferes with both methods.

MOLECULAR ANATOMY (MAN) PROGRAM

Biochemical separation systems development. We have continued to work with the Biochemical Separation Systems Development Group on the characterization of compounds isolated from physiological fluids by high-pressure anion exchange chromatography. To date, 70 ultraviolet-absorbing constituents and 12 carbohydrates have been identified using a variety of analytical techniques including gas chromatography (GC), ultraviolet spectrophotometry, and mass spectrometry.[6] In a study of the effect of a synthetic, chemically defined diet on the composition of urine, 26 compounds were identified and the absolute excretion rates measured for 11 of these.[7] Several major components were derived from vanilla flavoring. As an aid to the identification of biochemically significant compounds by GC, retention data as methylene unit values (MU) were determined for the trimethylsilyl derivatives of 250 compounds on two different GC stationary phases – nonpolar OV-1, and moderately polar OV-17 – and the difference in MU values (ΔMU) on the two columns calculated.[8] In general, highly polar compounds have large ΔMU values and those compounds forming derivatives containing several TMS groups have low ΔMU values. A technique has also been described for the application of GC and of combined GC–mass spectrometry to the identification of several common anions, either singly or in mixtures.[9]

Analytical electrophoresis laboratory. Both the hardware and software capabilities of this laboratory have been increased during the past year. A detector with a much faster response has been added to the microdensitometer. This detector system not only reduces the amount of time required to manually scan gels but it is also very similar to detector systems that have been interfaced to small computers. The interfacing of the microdensitometer to a computer will be necessary in any mass handling of data that would arise in a large screening program.

A second area in which the laboratory equipment has been improved is destaining equipment. A system has been designed and built that enables one to avoid individual handling of gels during the entire staining and destaining process.

Equipment has also been assembled which permits the continuous monitoring of both the internal gel temperature and the electrode buffer temperature during electrophoresis. Such an assembly is very useful in establishing optimal electrical parameters to avoid internal gel heating during electrophoresis.

Much work has been devoted to the design and development of an automated system for casting gels. The object of such a system is to make large numbers of identical gels. These identical gels would of course be useful to any careful work but they are a necessity to any mass screening system. Presently, two automated gel casting systems are being tested. Both are based on the casting of gels in a centrifugal field; and good quality gels have been obtained from both systems.

Staining techniques have also been adapted for various types of proteins. These protein types include glycoproteins, lipoproteins, LDH isoenzymes, and MDH isoenzymes.

Variations of a polyacrylamide gradient gel are being studied to obtain the best resolution of human serum proteins. A map of human serum proteins on such gradient gels is being carefully constructed by using fractions of human serum separated by high-resolution centrifugation.

Using four parameters for each band in the electrophoregram, the band pattern for a complicated gel scan can be stored in a computer. The recalled pattern for a complicated gel scan can be stored in a computer. The recalled pattern is quite accurate even from a quantitative standpoint. This ability to store and recall gel patterns will be used in conjunction with the computer interfacing of the microdensitometer.

GeMSAEC fast analyzer development. The GeMSAEC fast analyzer has proved to be a unique photometric system that may include some or all of the following components: a rotor containing a number of cuvettes, a photometer and light source, a photomultiplier or solid-state detector, an oscilloscope, and a dedicated

6. J. E. Mrochek, W. C. Butts, W. T. Rainey, Jr., and C. A. Burtis, "Separation and Identification of Urinary Constituents by Use of Multiple-Analytical Techniques," *Clin. Chem.* 17, 72 (1971).

7. W. C. Butts, J. E. Mrochek, and D. S. Young, "Influence of Certain Components of a Chemically Defined Diet on Urinary Excretion of Ultraviolet-Absorbing Compounds," *Clin. Chem.* 17, 956 (1971).

8. W. C. Butts, "Two-Column Gas Chromatography of the Trimethylsilyl Derivatives of Biochemically Significant Compounds," submitted for publication to *Analytical Biochemistry.*

9. W. C. Butts and W. T. Rainey, Jr., "Gas Chromatography and Mass Spectrometry of the Trimethylsilyl Derivatives of Inorganic Anions," *Anal. Chem.* 43, 538 (1971).

computer or other data-handling system. The system has been previously described,[10-12] and commercial models are now available.[13-15] Most of the problems associated with software and interfacing to the on-line computer have been solved. Computer software and operation have been optimized for routine clinical testing.

Major emphasis has been placed on the development of an automatic sample and reagent loader, an automated wash cycle for the rotor, a controlled temperature system for the rotor, and the investigation of new system concept allowing greater sample throughput and equipment size reduction.

The most critical limiting factor on sample throughput in the routine operation of the GeMSAEC analyzer has been the time required to load the individual transfer disks with sample and reagent. To reduce this time and to decrease the possibility of human error, an automatic sample and reagent loader was developed for the 15-place system utilizing an air-actuated, automatic Hamilton syringe. This loader has been described in detail previously.[16] This device has proven to be extremely precise, reliable, and accurate. Because of the excellent performance of this system an additional unit was purchased and a combination dilutor-sampler was fabricated using another commercial unit, the National Instrument Laboratory (Nilab) gas chromatography sample dilutor. The modified unit is shown and described in detail in a previous report.[16] Our initial studies have shown the instrument to be precise and accurate. It has been used in routine operation in the clinical laboratory of the ORNL Health Division for about six months. Only minor upkeep and repair problems have been encountered.

An automated wash and dry cycle has also been designed, fabricated, and installed on the 15-place GeMSAEC unit in the Health Division. This unit automatically controls the speed of the rotor during the washing and drying periods, dispenses an adjustable amount of preheated water to wash and rinse the system, and completes the cycle with a period of drying with preheated air.

To determine the feasibility of increasing sample throughput rate by means of increasing the number of cuvettes per rotor, a 42-cuvette GeMSAEC fast analyzer has been designed and fabricated and is currently being evaluated.[17] This system is similar to the 15-place system but, because of the increased mass and size of the rotor, was redesigned to provide adequate acceleration and braking capacities. An additional difference was in the use of 0.083-in. Chemcor glass windows in place of the 0.5-in. Pyrex windows on the 15-cuvette models. Chemcor is a special glass developed by the Corning Glass Works for use in the Lunar Landing Module and, at a comparable cost, improves the physical strength of the windows without sacrificing optical quality. Rotor temperature of this system is controlled by means of copper coils placed around the rotor cavity through which a constant temperature liquid is pumped. Studies have indicated that the temperature differential within the rotor is less than 0.5°C. Our initial tests with the 42-place system have shown the same analytical accuracy and precision as the 15-place system. Sample throughput was increased by about 50% compared to the 15-place system. This increase will be much greater on completion of a sample and reagent loader now being developed for the 42-place transfer disk.

Miniature GeMSAEC fast analyzer. A miniaturized system has been designed and fabricated which also consists of an enclosed rotor, rotor drive mechanism, stationary colorimeter, and small portable oscilloscope. It is a desk-top model approximately 15 X 15 X 12 in. and should have most of the advantages found in the larger units. Variable-size rotors are being tested on this unit containing from 8 to 17 cuvettes. Several chemistries have been run on this unit, and provisions have been made for interfacing to a PDP-8 computer. We are attempting to develop inexpensive throwaway rotors for this system and also prepackaged chemicals in the rotor. We are also examining the possibility of freeze drying reagents within a rotor and reconstituting them

10. C. D. Scott et al., *Biochemical Separations Systems Development Section of the Molecular Anatomy Program Progress Report for the Period March 1, 1970 to August 31, 1970 (1970)*, ORNL-TM-3166.

11. N. G. Anderson, "Analytical Techniques for Cell Fractions. XII. A Multiple-Cuvet Rotor for a New Microanalytical System," *Anal. Biochem.* 28, 545 (1969).

12. D. N. Mashburn, R. H. Stevens, D. D. Willis, L. H. Elrod, and N. B. Anderson, "Analytical Techniques for Cell Fractions. XVII. The G-IIC Fast Analyzer System," *Anal. Biochem.* 35, 98 (1970).

13. Centrifichem; available from Union Carbide Corp., Tarrytown Technical Center, Tarrytown, N.Y. 10591.

14. GeMSAEC, available from Electronucleonics, Inc., Fairfield, N.J.

15. Rotochem, available from American Instrument Co., Silver Springs, Md.

16. C. D. Scott et al., *Biochemicals Separation System Development Section of the Molecular Anatomy Program Progress Report for the Period September 1, 1970 to February 28, 1971 (1971)*, ORNL-TM-3434.

17. C. A. Burtis, W. F. Johnson, J. E. Attrill, C. D. Scott, N. Cho, and N. G. Anderson, "Increased Rate of Analysis by Use of a 42-Cuvet GeMSAEC Fast Analyzer," *Clin. Chem.* 17, 686 (1971).

with water or buffer but with only limited success thus far. Much additional study on prepackaging reagents within the rotor will be undertaken in the near future since this system is being considered for users in the NASA space laboratory and will be expected to operate under conditions of zero gravity.

Isopycnometric serology. A new serologic technique,[18] based on changes in banding density of centrifuged latex particles coated with antibodies or antigens was evaluated in several possible applications. Because of the potential use of an automated system based on this principle in such fields as screening for infectious agents and cancer detection, we also made light-scattering and fluorescence measurements on separated bands with a scanning photometer.[19]

Most of our work was done with polystyrene beads with an average diameter of 0.109 μm. In a 5-ml centrifuge tube containing a 10 to 50% sucrose density gradient, 1 to 10 μg of beads is usually convenient for the final band recovery and refractometric density determinations. The coating reaction is practically instantaneous at room temperature. A typical initial rate of adsorption for gamma globulin is 50 molecules/sec (per bead), decreasing to 1 molecule/min after 10 min. When coated and uncoated beads are mixed, partial transfer of the attached molecules takes place immediately, but equilibrium is not attained even in 8 hr.

Sensitivity is related directly to molecular weight and inversely to particle size. As a general rule, beads of 0.3 μm diameter are satisfactory for determining serum proteins with molecular weights of about 1,000,000. For the range 50,000 to 200,000, the smallest beads available (0.1 μm) are used. Molecular weights less than 10,000 would probably require beads of 0.01 to 0.03 μm. These figures are based on computations and measurements with IgG, IgM, insulin, and antiinsulin serum.

It is possible to detect free insulin in microgram quantities. For practical purposes, such as determining the hormone in blood serum, however, it would be necessary to use beads of about 0.01 μm. The reverse process, measurement of free antibody on insulin-coated beads, appears to be feasible, since increases in density as high as 0.05 are obtained with antiinsulin serums, and insulin is not strongly immunogenic. Bound antibody, being essentially unreactive under the conditions used, should not interfere.

Beads coated with human IgG (4500 molecules/bead) react with IgM macroglobulins in arthritic serum.[18] A 12- to 15-fold increase in IgM molecules attached to the beads occurred with serum positive for rheumatoid arthritis. Whether the values obtained for normal serum (230 to 300 molecules/bead) represent nonspecific adsorption or subclinical levels of the same rheumatoid factor could be established through longitudinal screening.

Cells, including bacteria, become attached to beads coated with a specific antibody against the particular cell. We have observed such reactions with *E. coli* and SV40 induced hamster tumor cells. Development of this principle, along with the necessary instrumentation, could provide improved systems for disease-control surveys.

In view of increasing interest in the embryonic antigen problem and early cancer detection by immunochemical methods, we are concentrating our efforts on these areas. Beads coated with tumor antigen (SV40 hamster tumor soluble phase) react with antiserum against this material, and also with antiserum to ten-day hamster fetus soluble phase. Immunochemical properties of various protein fractions isolated from cell membranes in the Molecular Anatomy Program have been compared. Work has been started on determining whether circulating carcinoembryonic antigen can be detected by isopycnometric serology as a basis for early cancer screening.

Prenatal detection of human genetic disorders. In pregnancies at risk for serious genetic disease, antenatal diagnosis is now possible as a result of recent progress in three areas.[20] They are (1) transabdominal amniocentesis for withdrawal of desquamated fetal cells, (2) cultivation of the cells to provide sufficient material for chemical analysis, and (3) identification of the biochemical defect which characterizes the disease. Except for a few disorders (e.g., mongolism), which can be quickly identified by cytogenetics, it is generally necessary to prepare cell cultures, requiring four to six weeks. This can be an intolerable delay in terms of added risk to the fetus and prolonged anxiety to the parents. Another complication, previously disregarded, arises in the heterogeneous cell populations, not only in fresh amniotic fluid, where dead cells predominate, but in cultures as well, where a distinct biochemical difference between cell types has been established.[21]

18. N. B. Anderson and J. P. Breillatt, "Isopycnometric Serology," *Nature* 231, 112 (1971).

19. L. H. Thacker, "Tube-Scanning Photometer," ORNL-4683 Special Part I (1971).

20. R. O. Brady, "Prenatal Diagnosis of Lipid Storage Diseases," *Clin. Chem.* 16, 811 (1970).

21. S. B. Melancon et al., "Histidase Activity in Cultivated Human Amniotic Fluid Cells," *Science* 173, 627 (1971).

To eliminate the necessity of cell cultivation and to provide refined methods for discriminating between different cell types, we have initiated work on the microanalysis of isolated, fresh amniotic cells, selected according to viability, morphology, size, and other appropriate criteria. The desired cell is physically isolated by micrurgical techniques and then extracted for subsequent microphotometric enzyme assays.

Synthetic substrates derived from *p*-nitrophenol, *p*-nitrocatechol, and 4-methylumbelliferone, commonly used in diagnosing ganglioside storage and other hereditary diseases, can be used in the quantities required for our work and at optimum concentrations for enzyme determinations. We are also working on the problem of measuring reduced nicotinamide dinucleotide under conditions compatible with this technique, which should result in the availability of a wide range of clinical enzyme procedures at the cellular level.

Our work to date has been concerned mainly with the mechanics of the method and measurement of the requisite reaction products. A partial list of disorders now detectable in cultured cells with such reactions includes Tay-Sachs, Sandhoff's, Gaucher's, Fabry's, Lesch-Nyhan's, and Pompe's diseases, generalized gangliosidosis, alysosomal acid phosphatasia, and metachromatic leucodystrophy. Tests for these diseases do not require use of authentic radiolabeled substrates.

Prenatal diagnosis is increasingly important in genetic counseling, and as a basis for intrauterine therapy or possible intervention, where indicated. Eleven of 17 states which have adopted abortion laws in the last five years recognize fetal deformity in their statutory provisions. Although some of the nontechnical issues surrounding prenatal diagnosis and therapeutic abortion are still unsettled, scientific progress has accelerated in the last year or two, emphasizing the potential value of immediate analysis following amniocentesis, whenever possible. For diseases in which the biochemical defect is not expressed in the amniotic cells, we believe that nonspecific tests could be useful inasmuch as prenatal diagnosis is done only in high-risk pregnancies.

Measurement of biochemical alterations in amniotic cells may also be of interest in detecting fetal injury from viral infection, teratogenic drugs, irradiation, or other environmental sources. The techniques being developed for this work will be applicable also in other investigations where biochemical differences between neighboring cells or structures are important and where a scale-down would effect savings in time, materials, or equipment.

BIOCHEMISTRY OF HUMAN VARIANTS GROUP

Metabolic defects screening program. The Biology Division of ORNL has organized a Biochemistry of Human Variants Group which is developing a Metabolic Defects Screening Program. This group will be examining body fluids, primarily urine and blood serum, of individuals with presumed genetic defects in order to detect abnormal metabolites, and eventually to relate these abnormalities to specific gene locations. Since many of the initial screening processes involve analytical procedures, we have begun a cooperative effort with this group. Our efforts at first will involve the thin-layer chromatography (TLC) of urine for the detection of unusual amino acids, or unusual variations of the normal amino acid composition. A tentative scheme for the TLC of urine for screening purposes has been worked out. We are using a microcrystalline cellulose adsorbent layer, "Avicel," 100 μ thick. We are shaping the areas in which the chromatographic development takes place so that the sample is applied to a region 0.5 cm wide and is allowed to spread out to a width of 2 cm. The solvent is *t*-butanol-acetone-formic acid-water (70:10:15:15), and we use a double development in one direction, carrying out the developments at 30°C. No pretreatment of the urine is contemplated except filtration through a millipore filter. Approximate R_f values for 35 ninhydrin-positive amino acids as well as for urea and creatinine have been obtained. Testing of actual samples has not yet begun.

We are attempting to identify one specific abnormal urinary component, formiminoglutamic acid (Figlu), a metabolite of histidine. One nmole (~0.2 μg) of Figlu in 5 μl of urine with TLC can be detected, but this is not sensitive enough, so we are testing an enzymatic procedure which has a sensitivity about 50 times greater.

CHARACTERIZATION AND PURITY OF BIOCHEMICAL COMPOUNDS

The National Academy of Sciences–National Research Council Committee on Specifications and Criteria for Biochemical Compounds has decided to develop specifications and criteria for labeled compounds as well as those unlabeled. The Subcommittee on Nucleotides and Related Compounds is currently developing recommendations in the following areas: radiochemical purity, chemical purity, quality control, specific activity measurement, proof of the position of

a labeled atom, packaging, storage, and stability. Any experimental work required will be done in the Analytical Chemistry Division.

The NAS-NRC Committee on Specifications for Adenine in Anticoagulant Solutions has written specifications for adenine for use in blood bags which will be published. In addition the committee is sponsoring the preparation of a quantity of purified adenine for use as a reference standard by the pharmaceutical firms preparing blood bags. The ORNL Analytical Chemistry Division will participate in round-robin testing of the material and serve as the center for collecting and processing the data.

4. Nuclear and Radiochemistry

W. S. Lyon, Group Leader
H. H. Ross, Assistant Group Leader

L. C. Bate
F. F. Dyer
J. S. Eldridge
J. F. Emery
T. H. Handley
S. B. Lupica
S. A. Reynolds
E. Ricci
J. E. Strain
H. E. Zittel
C. Feldman[1]
K. J. Northcutt[2]

TRACE ELEMENT DETERMINATIONS IN BIOLOGICAL AND ENVIRONMENTAL SAMPLES

Trace element profiles through a coal-fired steam plant. The primary purpose of this program is to determine, experimentally, the trace elements in the influent and effluent materials of a selected TVA coal-fired power plant. A number of toxic elements are known to be present in coal; their ultimate fate following combustion of the fuel is uncertain. We hope to be able to establish the pathways of such elements through the fuel plant and to determine in what part(s) of the waste system they finally stop. This information is of considerable importance in planning slag, fly ash, and gas effluent control and disposal.

Following several meetings between ORNL and TVA personnel, the Allen Steam Plant in Memphis was selected as the test site; test samples will be obtained early in December 1971. TVA will provide samples from all precipitators, ash receivers, and stack; most sampling will be performed by the regular TVA sampling crew. Newell Bolton of the Health Division will be the ORNL technical expert on site to direct and assist in special sampling of influent air and the effluent stack gases. Particular attention will be paid to those elements recently named as toxic pollutants under new 1971 water pollution legislation: Co, Cr, Hg, Ni, Se, Br, Sb, As, Be, Cd, Sn, Ba, and V. Additions to this list we believe important are Cu, Fe, Mn, P, and B.

In preparation for the coal and ash samples, we have investigated three techniques for use: activation analysis, spark source mass spectrometry, and cold vapor atomic absorption, but we do not preclude possible application of electrochemical, x-ray fluorescence, or other methods. We propose to emphasize accuracy and optimum precision in this project. To this end we are investigating the best method of determining these elements, best being defined in terms of overall accuracy and precision tempered with economics. Although analytical results have been published elsewhere claiming that a particular method used is the best, little comparative data have yet appeared to substantiate such claims. We are acquiring this information.

Several possible dissolution schemes for use with irradiated samples of coal and ash have been developed. It is hoped, however, that most of the determinations can be performed by nondestructive neutron activation. Among the elements observed in coal by this latter technique are: Al, Ti, V, Mn, Na, K, Ca, Cl, Br, La, Fe, Sb, Sc, Co, As, Eu, and Sm. A number of other unidentified gamma-ray photopeaks are being followed in hopes that the combination of decay and energy measurement will enable elucidation. A few quantitative results are available from the short-lived components; elements (and ranges in samples run) are: Al(0.9 to 2.4%), Ti(656 to 1560 μg/g), V(66 to 76 μg/g), Mn(16 to 82 μg/g).

Mercury has been determined by atomic absorption in a number of TVA coal samples and U.S. Bureau of Mines (USBM) round-robin samples. Results obtained at ORNL on the USBM samples agree well with the average values reported by the Bureau. Mercury in TVA coals seems to fall in the 0.12-to-0.16-μg/g range. We plan to check these values by use of neutron activation analysis (NAA).

A number of elemental constituents of fly ash have been determined by both spark source mass spectrometry and neutron activation. Where the same elements were determined, agreement is within expected experimental error. The elements seen fall into three general groups: Ca, Al, Ti, Fe, Na, S, and Cl (6,000 to 100,000 μg/g); V, Mn, As, B, Ba, Cr, Cu, Ni,

1. Special assignment.
2. Radioisotopes-radiochemistry group.

Pb, Sr (100 to 300 μg/g); and Co, La, Sm, V, Be, Cd, Sb, Tl, Hg, and Se (<1 to 25 μg/g).

Air and stack gas samples will pose special problems; probably a concentration step will be incorporated in the sampling stage. We are particularly interested in mercury in these samples.

This program is just getting under way and we look forward to a number of interesting problems; we believe our results can contribute significantly to knowledge concerning pollution by fossil-fueled steam plants.

Mercury and cadmium. The increasing concern about environmental contamination by mercury, cadmium, and other heavy elements has prompted interest in the development of analytical methods that are rapid, economical, and reliable. The determination of mercury in soil, sediments, and water is of continuing interest; methods are needed that require a minimum of sample preparation. Isotope-excited, energy dispersive, x-ray fluorescence analysis is a technique that is rapid, relatively inexpensive, and requires a minimum of sample preparation. A ~100 mCi ^{241}Am ring source designed after the work of Giauque was used as a source of photons.[3] The optimum secondary target for excitation of mercury *L* x rays was found to be niobium; the photons from ^{241}Am produced niobium $K\alpha$ x rays (16.614 keV) which, in turn, excited mercury in the sample to produce *L* x rays of mercury. The counting time varied from 20 to 200 min, and approximately 1000 counts were produced for the integrated mercury $L\alpha$ peak; the background was counted for a corresponding length of time. The detector was a 3-mm by 25-mm^2 Si(Li) detector with a resolution of 190 eV for Fe($K\alpha$ = 6.403 keV). A lower limit of ~50 ppm in soil and 2 ppb for water was found. Mercury in the water was concentrated by using asbestos impregnated with cadmium sulfide as a getter.

Neutron activation analysis continues to be a useful tool for the determination of mercury. We have used it for a number of referee analyses of samples submitted by outside agencies. The destructive method which requires a chemical separation of mercury after irradiation has been refined by using a mixture of H_2SO_4-HNO_3 and NH_4VO_3 to dissolve the sample. This is followed by precipitation of the Hg as HgS.

In addition we have examined our irradiation techniques and eliminated several practices that could result in erroneous results. We noticed some discrepancies in data from mercury determination and so began to look at aspects of the analysis other than the chemistry.[4] After calculating saturated activity of mercury standards encapsulated in plastic and quartz we found that considerable losses of mercury had occurred from the specimens irradiated in sealed plastic vials in the BSR. Later, similar losses were observed in the laboratory when plastic containers containing tracer mercury were placed in a drying oven at slightly elevated temperature conditions.[5] From these experiments we conclude that (1) all samples and standards must be sealed in quartz for irradiation longer than a few minutes, (2) mercury can escape from sealed plastic vials and enter other sealed plastic vials, (3) samples for mercury analysis must not be collected and stored in plastic containers for delivery to the laboratory for analysis, and (4) mercury is lost upon freeze-drying of samples.

For some practical environmental monitoring problems an on-line monitoring system would be most desirable. The use of ^{252}Cf with its spontaneous neutron emission has been suggested as a possible on-line monitoring system. The neutron output is uniform, shielding requirements are modest, and maintenance and power costs are essentially zero.

In the process of neutron capture a nucleus emits prompt gamma rays that are usually quite energetic – often with energies up to 10 MeV. These energetic gamma rays have high transmission through matter and thus allow one to make measurements on large samples. We have used a 10-μg ^{252}Cf source placed in a large plastic drum filled with water in which mercury or cadmium salts had been dissolved. The detector was a true coaxial Ge(Li) crystal, 44 mm in diameter with 10% efficiency and a resolution of 2.5 keV. The spectrum from 4 to 8 MeV was recorded. To determine mercury the integrated area of the 5.967-MeV peak of the mercury spectrum was measured, while for cadmium the 5.824-MeV gamma ray was used. A lower limit for detection of 20 ppm for both mercury and cadmium was found. The 2.23-MeV gamma ray from H(n,γ) caused problems since it produced a high count rate. Inelastic neutron scattering from oxygen produced gamma rays of 5.1%, 5.63, and 6.14 MeV which contributed high background in the area of interest. For these reasons we have concluded that for our experimental conditions it will not be possible to determine heavy metals in water at the ≤1-ppm level, which is the

3. R. D. Giauque, "A Radioisotope Source-Target Assembly for X-Ray Spectrometry," *Anal. Chem.* **40**, 2075 (1968).

4. L. C. Bate, "Loss of Mercury from Containers in Neutron Activation Analysis," *Radiochem. Radioanal. Lett.* **6**(3), 139 (1971).

5. L. C. Bate and W. S. Lyon, "Determination of Mercury in Biological Samples by Neutron Activation Analysis," ANS Topical Meeting – Nuclear Methods in Environmental Research, August 23–24, 1971, University of Missouri, Columbia.

concentration of interest. However, the results do show that a ^{252}Cf source would probably be useful for determination of heavy metals in an aqueous process steam at the ⩾100-ppm level (0.01%). This was a collaborative effort with V. A. DeCarlo of the Chemical Technology Division.

Wet-ashing organic matter for the determination of mercury by atomic absorption. Traces of mercury are often purposely volatilized from a sample solution to determine that element by atomic absorption. It is essential that no organic vapors accompany the mercury, since they would absorb light at the same wavelength as the mercury, seriously interfering with the analysis. All organic matter in the sample should therefore be destroyed before mercury is determined by this method.

We desired a wet-ashing procedure that would completely destroy organic matter and require a minimum of time, attention, glassware, reagents, and apparatus. All available procedures left something to be desired in at least one of these respects.

The procedure now used is an adaptation of the G. Frederick Smith nitric-perchloric acid procedure.[6] In the present modification, the entire oxidation is performed in a 250-ml volumetric flask fitted with an asbestos-jacketed air condenser. This condenser is prepared from a male 19/38 standard taper borosilicate glass joint, whose length is 20 cm overall. Most of the cylindrical section is inserted into a suitable length of ⅞-in.-ID woven asbestos tubing. This is held in place by winding with Teflon sealing tape.

After the preliminary destruction of easily oxidized material with HNO_3, the oxidation potential of the mixture is gradually raised by increasing the concentration and temperature of the perchloric acid through the evaporation of H_2O and HNO_3. Completion of the oxidation of organic matter is signaled by a color change of the chromium catalyst from green to orange.

The length of the air condenser is chosen so that the nitric acid refluxes completely at 190° (hot-plate surface temperature), but mercury and/or mercury compounds are retained at temperatures up to 280°. The asbestos jacket hastens the evolution of $HClO_4$ vapor from a condenser of a given length. If it were not used, the condenser would have to be shortened considerably, increasing the risk of losing mercury vapor.

In the present procedure, a 1-g (or smaller) sample is placed in the flask, treated with 20 mg of $K_2Cr_2O_7$, 200 mg of sea sand, 5 ml of concentrated HNO_3 and 15 ml of concentrated $HClO_4$, and the condenser fitted in place. The flask and condenser are heated for 30 min at 190° (hot-plate surface temperature), 30 min at 250°, and as much time at 280° as is required for the abovementioned color change. The flask is then cooled and the solution made to volume. The overall time required is usually less than 90 min. Hot-plate temperatures should be kept to within 5° of the nominal values.

Materials containing easily oxidized substances (e.g., coal, cellulose) should be treated with nitric acid alone before the perchloric acid is added, to prevent excessive foaming. If larger samples (e.g., 5 g) of fatty materials are to be dissolved, a preliminary 15-min degradation of the sample with concentrated H_2SO_4 at 190° is advisable.

Tests with 1 μg of mercury added to mercury-free fish meal in the form of $Hg(NO_3)_2$, $(C_6H_5)_2Hg$, $(C_2H_5)_2Hg$, $CH_3COOHgC_6H_5$, and C_2H_5HgCl gave 96 to 102% recovery of the mercury. An analysis of the National Bureau of Standards Orchard Leaf Sample (SRM 1571) gave 154 ppb. The NBS tentative value is 155 ppb.

Precision tests were conducted with powdered coal samples containing 50 to 250 ppb of mercury. Three 1-g portions of each coal were wet-ashed and analyzed separately. The relative mean deviations within these groups of three ranged from 1.5 to 5.0%, averaging 3.3%.

Assessment of human exposure to environmental mercury and other minerals. An NSF supported project is being carried out by researchers at Vanderbilt University and the Environmental Science and Engineering Corporation of Nashville. The budget of this project includes funding for a study at ORNL to investigate mercury in human placenta. In addition, total trace element concentrations will be determined on selective tissue samples. Neutron activation analysis will be the primary technique used in our studies, which have only just begun.

SENSITIVITIES AND THERMAL EFFECTS IN PROTON-REACTION ANALYSIS OF BIOLOGICAL SAMPLES FOR ^{12}C, ^{13}C, AND ^{15}N

We have successfully applied counting of prompt gamma rays from the reactions $^{12}C(p,\gamma)^{13}N$,

6. G. Frederick Smith, "Wet Oxidation of Organic Matter Employing Perchloric Acid at Graded Oxidation Potentials and Controlled Temperatures," *Anal. Chim. Acta* 17, 175 (1957); Harvey Diehl and G. Frederick Smith, "Wet Oxidation of Organic Matter Employing Mixed Perchloric and Sulphuric Acids at Controlled Temperatures and Graded High Potentials," *Talanta* 2, 209 (1959).

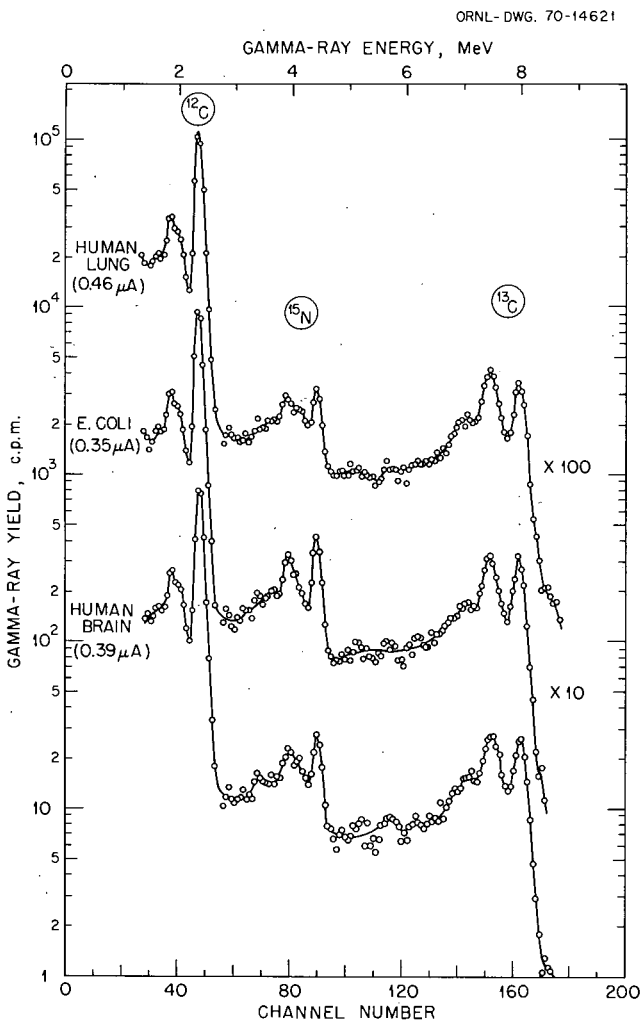

Fig. 4.1. Typical prompt gamma-ray spectra from human lung, brain, and *E. coli*, under bombardment with 0.7-MeV protons.

$^{13}C(p,\gamma)^{14}N$, and $^{15}N(p,\alpha\gamma)^{12}C$ induced with 0.7-MeV protons (0.33 to 0.48 μA beam) to the determination of isotopic abundances of ^{12}C, ^{13}C, and of N/C ratios, in biological materials;[7] samples of human lung, brain, and *E. coli* were analyzed against urea, benzamide, and graphite standards. Figure 4.1 displays typical gamma-ray spectra from these samples, with photopeaks at 2.363, 4.433, and 8.060 MeV (the last two with first-escape peaks) characteristic from ^{12}C, ^{15}N, and ^{13}C, respectively; these peaks are well defined and free from interferences, thus being quite suitable for the measurements. Relative standard deviations of 4.8 to 8.6% and 4.8 to 9.0% for the determinations of ^{13}C isotopic abundances and of ratios N/C, respectively, were observed. Therefore, we can observe a 20% variation and, for example, determine an increase in the ^{13}C abundance from the natural 1.11% (average) to only 1.33%. An accuracy check of the ^{13}C determination – with reference to mass spectrometric "true" results – gave a relative error of only –1.8% for proton-reaction analysis. The method allows rapid determinations in biomedical and environmental ^{13}C tracer studies; this stable isotope provides an interesting alternative to ^{14}C, whose use is limited by its radioactivity. In fact, ease and speed are important advantages of proton-reaction analysis over mass spectrometry and nuclear magnetic resonance, and its error is compatible with the natural variation of biological results.

We have now completed this work with final results for analytical detection limits, and with a study on sample chemical stability under bombardment; three papers were published in the open literature.[8-10]

Figure 4.2 shows final prompt gamma-ray yield curves for the above nuclear reactions, determined with urea and graphite standards. We found little energy dependence for reactions on ^{12}C and ^{13}C, as expected;[11] but we observed a dramatic increase with energy for that on ^{15}N, because of its many strong resonance peaks. From these curves – assuming a minimum determinable count-rate of 500 cpm/μA (Fig. 4.1) – we estimated detection limits (in parts per thousand) of 66 and 8.5 for ^{12}C and ^{13}C, respectively, and of 0.88 (0.7 MeV), 0.063 (1.0 MeV), and 0.030 (1.2 MeV) for ^{15}N.

Because the charged-particle kinetic energy is rapidly degraded in matter into relatively large amounts of heat, care should be taken to prevent chemical decomposition of biological samples during bombardment. The total energy (heat) q absorbed by a target after bombardment during time t is

$$q(\text{calories}) = 0.239\, zI(\mu\text{A})E(\text{MeV})t(\text{sec})\,, \qquad (1)$$

7. W. S. Lyon et al., "Photon-Reaction Analysis for the Ratios $^{13}C/^{12}C$ and $^{15}N/^{12}C$ in Biological Samples," *Anal. Chem. Div. Annu. Progr. Rep. Sept. 30, 1970,* ORNL-4636, p. 25.

8. E. Ricci, "Simple, Reliable Basic Equation for Proton-Reaction Analysis of Biological Materials," *Nucl. Instr. Methods* **94**, 565 (1971).

9. E. Ricci, "Determination of ^{12}C-^{13}C Isotopic Abundances and N/C Ratios in Biological Substances by Proton-Reaction Analysis," *Anal. Chem.* **43**, 1866 (1971).

10. E. Ricci, "Chemical Stability of Biological Samples Subjected to Proton-Reaction Analysis," *J. Radioanal. Chem.* (in press).

11. F. Ajzenberg-Selove and T. Lauritsen, "Energy Levels of Light Nuclei. VI." *Nucl. Phys.* **11**, 1 (1959).

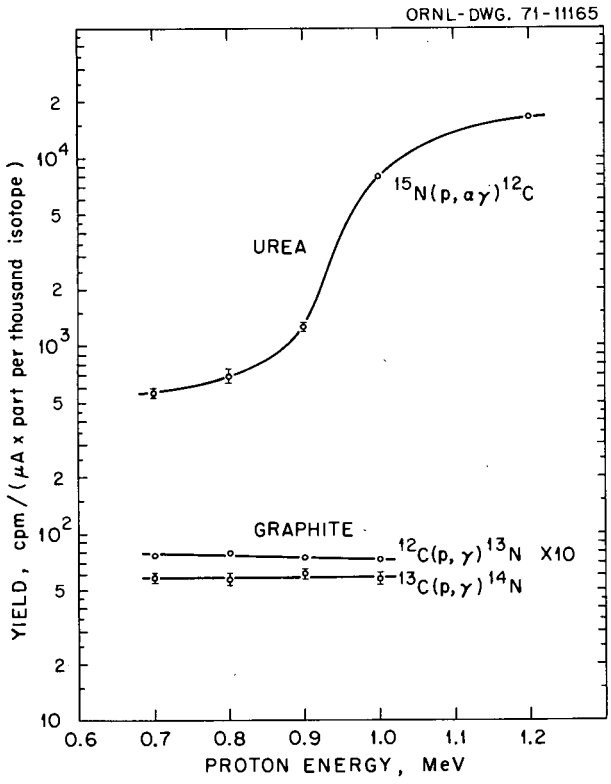

Fig. 4.2. Nuclear-reaction prompt gamma-ray yields. (Bombarded sample equidistant, at 5.7 cm, from two 12.7 cm X 12.7 cm NaI(Tl) detectors. Points with no error bars have precisions better than 2%.)

where z and E are the atomic number and the energy, respectively, of the bombarding particles in a beam of intensity I; thus, in our experiments it was q/t = 4.0 calories per minute on the average. To study, quantitatively, the overall heating effect on all three biological samples, we subjected each to a 2-hr irradiation; spectrum readings and visual observations were made every 30 min.[10] We measured (cpm/cpm) the raw prompt-gamma count-rate (or yield) ratios $Y(^{13}C)/Y(^{12}C)$ and $Y(^{15}N)/Y(^{12}C)$ – respectively proportional[8] to the isotopic ratio $^{13}C/^{12}C$ and to the elemental ratio N/C – at each spectrum reading[9] and followed these ratios as a function of the total energy q deposited in each sample (Eq. 1). Because of variations in beam intensity, this is more accurate than using a time function as we had done in the past.[7] Thus, to investigate any significant changes and, particularly, any definite target decompostion trends, a straight line

$$R = a + bq \qquad (2)$$

was fitted to each of the six sets of successive ratios R by the least-squares method.[12] In these experiments we assumed the target stability to be related to the constancy of the above isotopic and elemental ratios and, thus, of the yield ratios R; consequently, we considered a nearly horizontal fit ($b \approx 0$) as indicative of sample stability under bombardment.

We observed, first, that values obtained for the slopes b were very small – ranging from –0.0000238 to +0.0000067 cal^{-1} – but displayed extremely large errors (77.3 to 1370%), most including b = 0 within their ranges. Second, probable errors of the fit[12] were reasonable, instead, and comparable with relative standard deviations (4.8 to 9.0%, see above) previously obtained for corresponding determinations. We concluded, therefore, that slopes are indeed *nil* and that *no* sample decomposition is apparent during irradiations in our conditions. Moreover, to dramatize these results, we used the calculated slopes to estimate "safe" lengths of bombardment; these lengths were defined as those required to cause an "acceptable" percent change to the yield ratio R, since the beginning of the irradiation, equal to the formerly determined relative standard deviation (see above) for each sample.[9] The "safe" lengths of bombardment were obtained first in units of total energy absorbed by the samples (calories) and then in units of bombardment time; Eq. 2 was solved for q for each "acceptable" change in R in the first calculation, and these results were used in the second to calculate t from Eq. 1 for our experimental conditions (0.7 MeV; 0.4 μA average). Results roughly suggest again that no significant damage should be expected during the first 50 min of bombardment (minimum "safe" length observed); this agrees with the visual observation during irradiation, that the samples only showed slight yellowing during the first 30 min, with this color turning to light brown within the next 30 min.

EFFECTS OF RADIATION ON ANALYTICAL METHODS

Many analytical methods may be adversely affected by high levels of high-energy radiation. The extent of such adverse effects cannot be accurately predicted from work carried out by the radiation chemists on similar systems since the conditions as used by the analytical chemist are almost always different and more complex. A program was initiated several years ago to study such radiation effects and, where present, to find

12. P. R. Bevington, *Data Reduction and Error Analysis for the Physical Sciences*, McGraw-Hill, New York, 1969.

methods for eliminating or at least minimizing any error introduced in a given analytical method by such radiation. We have continued the work investigating the effect of gamma radiation on analytical methods and are in the process of branching out into the effects of alpha radiation. To date, the methods studied have been largely those based on colorimetry since this type of method is by far the most likely to be radiation sensitive because of the low concentration of the measured element and because nearly all involve some type of color reaction with an organic reagent.

Colorimetric determination of iron. This study, which had been previously initiated, was completed and the results have been submitted for publication. In it the effect of gamma radiation on the thiocyanate, 1,10-phenanthroline and α,α'-bipyridyl methods for iron was evaluated and the radiation tolerance and level of error induced into the methods by various levels of gamma radiation was established.

Effect of gamma radiation on the Ni-dimethylglyoxime method. This study, continued from last year, has been essentially completed. We find that gamma radiation can cause large negative errors in the method but only under certain conditions. Thus it became necessary to do a fairly comprehensive study of the reaction itself in order to explain the apparent dose rate effect. For example, under gamma radiation, the color complex is attacked by the water radiolysis products much more rapidly than are any of the other reagents present. However, the forward reaction, that is, the complex formation, proceeds at a rate such that, unless the dose rate is on the order of $\sim 10^4$ rads/min, little radiation damage is seen. This holds true so long as an excess of oxidizing agent, $K_2S_2O_8$, is present. However, in the method, as used in the laboratory, the $K_2S_2O_8$ is the limiting reagent and, once it has been depleted, severe radiation damage is seen. The apparent regrowth of the color noted after removal from the radiation field is also a function of the $K_2S_2O_8$ remaining. This work is in the process of completion and is being submitted for publication.

NUCLEAR SAFETY SUPPORT PROGRAM

Radiolytic hydrogen control. The use of aqueous safety sprays in modern water-cooled power reactors has led to a variety of problems. Past work has shown that the generation of radiolytic gases (H_2, O_2) in the case of a design-basis accident is not the least of these. A series of studies was carried out to ascertain the possibility of eliminating, or at least largely reducing, the radiolytic gas generation by addition of a chemical reagent to the safety spray solutions being used by the various reactor vendors. We found that a variety of compounds, mostly oxidants, would decrease the rate at which radiolytic hydrogen is evolved. The most active reagent was found to be sodium metavanadate ($NaVO_3$). This compound was tested in the various spray solutions being used and, with one exception, was found to be efficacious in all of them. The basic borated thiosulfate spray solution is this lone exception. In water, in boric acid solution (3000 ppm boron), and in basic borate (pH 9, 3000 ppm boron) solution the addition of $\sim 10^{-3}$ M $NaVO_3$ decreases the $G(H_2)$ by a factor of ~ 10. Not only does the $NaVO_3$ decrease the rate of radiolytic hydrogen evolution but in water and boric acid solution it was found that the equilibrium concentration of radiolytic hydrogen is sharply decreased. Since the danger arising from the radiolytic hydrogen evolution is dependent on the hydrogen reaching explosive limits (>4 vol %), it is understandable that not only only the rate of evolution but also the equilibrium concentration is important. The $NaVO_3$ therefore acts as a safeguard in both senses. This work has led to the filing of a patent application covering the usage of $NaVO_3$, as well as several of the other compounds tested, for radiolytic hydrogen suppression in water-cooled power reactors.

Evolution of hydrogen from reactor containment coatings. As a part of the overall nuclear safety spray program, the reaction of various materials common to reactor containment systems with the proposed spray solutions was studied. It happens that nearly all the structural steel used in reactors today is coated with a zinc base primer coat prior to painting. This coated surface will be (in case of a design-basis accident) exposed to the safety spray solutions. The various paint vendors felt that no significant hydrogen would be evolved as a consequence of any reaction between the primer coat and/or paint and the spray solution. Since some doubt existed on this point, a study was carried out on sample coupons obtained from seven different paint vendors. Each vendor submitted a series of coupons with varying thicknesses of both primer and paint coat, the paints being those sold for such reactor usage. These coupons were exposed to the various spray solutions in an autoclave in which the specimens were carried through a cycle of physical conditions similar to those expected in the real case. The design-basis accident conditions are such that the surfaces will be exposed to the spray solutions for 5 min at 149°C, 105 min at 140°C, and 22 hr and 15 min at 107°C. After this cycle was completed the autoclave was brought to ambient temperature and sampled to determine the

hydrogen content in the gas phase. The following conclusions were found to be generally true.

1. The data clearly showed that, under design-basis accident conditions, the paint coatings (paint plus primer) are a potential source of large amounts of hydrogen. Dependent on the thickness of the primer coat and the percentage of zinc contained therein, hydrogen yields of from ~1 to 3 cc of hydrogen per square centimeter of area exposed can be expected.
2. The presence of the paint coat does not stop the hydrogen generation, and in some cases may even enhance it.
3. The boric acid (3000 ppm boron) spray solutions generate as much or more hydrogen than do the basic borated spray solutions.
4. The condition of the paint surface (blisters, etc.) after exposure to the spray solutions is no valid criterion of the amount of hydrogen evolved. The diffusion process by which the reagent reaches the zinc primer and the subsequent hydrogen is released to the atmosphere does not necessarily cause any change in the physical appearance of the paint coat.

As a partial result of the above studies, new paint standards for the reactor industry are under study.

CERENKOV COUNTING AND PHOSPHOR SCREENS

In the past year we have turned our attention to practical applications of some of the techniques we have developed for Cerenkov counting. We have noted previously that Cerenkov methods are rapid, easy to employ, inexpensive, and can exhibit a very high detection sensitivity for many radionuclides. For these reasons it appeared that the technique might be valuable for general screening assays of radioisotope levels in aquatic environments. We initiated a study to test this hypothesis using streams and ponds in the vicinity of ORNL as test areas.

Water samples from 14 locations were collected and returned to the laboratory. The residual activity in each sample was determined using two different analytical methods. The first method, a more or less standard technique, required concentration of the sample by evaporation, coprecipitation procedures, and a final radioassay of the sample solids. The second process was a direct Cerenkov assay of the water sample using 4-methylumbelliferone as a waveshifter. Counting was done in a commercial liquid scintillation unit. Although the counting times for both methods were comparable, the sample preparation time for the standard method exceeded 2 hr per sample, while the Cerenkov samples required less than 5 min each. The completed results illustrated that in terms of precision, accuracy, and sensitivity, the two methods are quite similar. However, when sample preparation time and cost per assay are compared, the Cerenkov method is clearly superior. The lower detection limit for the Cerenkov system is less than 2 pCi/liter.

A somewhat different application of the Cerenkov technique was also completed this year. On the basis of theoretical calculations and typical Cerenkov spectral response functions, we had previously suggested that mixtures of two isotopes could be assayed simultaneously in a Cerenkov counter. This is particularly relevant to biomedical studies where dual-isotope labeling procedures are becoming more common. An accepted technique in conventional liquid scintillation counting is to establish two distinct and separate pulse-height counting channels for an isotope mixture. The individual counting efficiency for each isotope in each channel is determined by using pure standards. The mixture is then counted in both channels, and by solution of a simple simultaneous equation the amount of each isotope in the mixture is calculated. There are a number of experimental and graphical techniques used to establish the discrimination parameters for each channel. We hoped to utilize the above technique for Cerenkov systems.

Our initial tests with ^{32}P and ^{36}Cl mixtures were only partially successful. The major problem was that significant errors were observed when the ratio of the disintegration rates of the two isotopes was large. An analysis of the difficulty indicated that the usual techniques used to establish the operating parameters of the instrument were not applicable to Cerenkov spectra. At this point we tried a somewhat novel approach to eliminate the difficulty. The Cerenkov spectral distributions of pure ^{32}P and ^{36}Cl were experimentally determined. A small general-purpose computer was programmed to duplicate the operational characteristics of the liquid scintillation counter. The experimental spectra were stored in the computer in such a way that they could be recalled in "mixed" amounts that duplicated real isotope mixtures. "Counting experiments" were performed on the computer using simulated counting channels, and the probable errors in the assay were determined. Virtually any conceivable counting condition could be checked, and an incremental search indicated a minimum in the experimental errors under specified conditions. The optimum counting conditions predicted by the computer were set

up on the real counting system. Mixtures counted under these conditions had errors in very close agreement with those predicted by the computer. It is our opinion that this technique has obvious applications in other counting problems. We have demonstrated that Cerenkov counting can be applied to dual-label experiments with high accuracy thus retaining all of the advantages of the Cerenkov method.

We have continued our programs on the development of phosphor screens for special radiation detection devices. As reported previously,[13] we had been working on the fabrication of a short-term information storage screen. Samples of our proposed storage system were submitted to an interested government agency for evaluation under the conditions of the proposed application. Their tests indicated that we had met their objectives of screen flexibility, excitation sensitivity, visual resolution, and persistence, and thus this program has been essentially completed.

However, as a result of this work, we were asked by the Department of the Army to attempt the development of new types of flexible phosphor screens for the detection of x rays. The primary objective of the program is the fabrication of an erasable phosphorescent screen that exhibits high sensitivity for x rays. Secondary objectives include the construction of a large flexible fluoroscopic screen and a more efficient x-ray intensification screen. Although this program has only been in effect for six months, we have been able to make some progress in all of the above application areas.

Screens are typically prepared by the following method. A layer of plastic is first deposited on a flat, smooth surface. This layer is loaded with white TiO_2 which serves as a reflector in the final screen. Next, a layer of phosphor-loaded plastic is formed. Finally, a clear plastic cover is used. The resulting three-layer sandwich is approximately 30 mils thick, can be bent or folded repeatedly, without cracking, and is impervious to moisture. A sample of the type of screen construction produced is shown below.

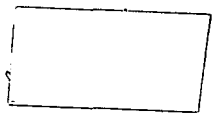

13. W. S. Lyon et al., "Cerenkov and Phosphor Studies," *Anal. Chem. Div. Annu. Progr. Rep. Sept. 30, 1970,* ORNL-4636, p. 32.

The fabrication of a large (12 × 24 in.) flexible fluoroscopic screen has been completed. The phosphor used was a more or less standard formulation of the ZnCdS type. The resulting phosphor film thickness was about 12 mils, which was determined by the loading level of 75 g per square foot – a loading level that was found to be optimum. The x-ray excitation characteristics of this screen were compared to a standard CB-2 fluoroscopic screen with the following results. For low-energy alpha rays (~65 keV), the flexible screen exhibited about 80% of the integrated intensity of the CB-2 screen. For higher energies (100 to 150 keV), intensity response of the two screens were comparable. Visual resolution at all energies were similar for both screens. This large screen has been submitted to the Army for further evaluation.

We have also investigated other phosphor materials for improved fluoroscopic response. These phosphors were mostly rare-earth types that are commercially available. However, we have also prepared some phosphors for evaluation. We are presently studying a gadolinium phosphor; preliminary testing of the bulk material and some initial film preparations indicate that this type may be superior to ZnCdS both in brightness and resolution.

Our main difficulty in the preparation of a phosphorescent screen is achieving high brightness following excitation. The problem is related to phosphor composition and thickness of the phosphor layer. If thickness is increased to enhance brightness, resolution suffers because of the diffusing effect of the phosphor layer. We recognized that a rare-earth phosphor might be more efficient but as yet we have been unable to locate commercially or to synthesize locally a long-decay rare-earth phosphor. Therefore, we are investigating methods of increasing the x-ray capture probability of sulfide phosphors. Some success has been achieved by loading the phosphor layer with a target atom such as barium. We are continuing work on this approach.

We have also completed studies on "erasing" the phosphorescent image when desired. Flooding the screen with infrared radiation appears to be a ready and practical solution to this problem. However, until we decide on the most suitable phosphor composition for the screen, the best erasing procedure cannot be finalized.

Samples of a flexible intensification screen have been prepared using calcium tungstate. These perform similarly to conventional rigid tungstate screens. A number of rare-earth phosphors have been selected for study for an improved screen system. Two materials show real promise in this application. One phosphor has the

advantage that its emission extends into the green spectral region and may serve as both an intensification screen and a fluoroscopic screen. Tests of these materials are complicated since the observed results depend on both the screen and the type of film used. We are now investigating the response using several types of x-ray film as well as more typical panchromatic emulsions.

LOW-LEVEL GAMMA-RAY SPECTROMETRY OF RETURNED LUNAR SAMPLES

Completion of measurements on Apollo 12 returned lunar samples. Concentrations of primordial radioelements and of cosmogenic radionuclides in crystalline rocks, breccias, and soils from the Ocean of Storms were determined both at the Lunar Receiving Laboratory, Houston, Texas, and with the low-level spectrometers at ORNL. First data on samples which comprised about 40% of the returned Apollo 12 material were summarized in two papers.[14,15] Since these papers were submitted, rock 12031,2 has been analyzed for its major radioactive components; variations in the concentrations of ^{26}Al and ^{22}Na as a function of depth were determined for rocks 12002 and 12053; and studies on the Apollo 12 double core tube, 12025-12028, are nearing completion.

Studies on samples from the Apollo 14 mission. The distribution schedule for Apollo 14 samples precluded any studies of short-lived radionuclides in our laboratory. In fact, the distribution was delayed such that about half of our present samples were not received until July and August. Thus we have found that our measurements on Apollo 14 samples seriously overlap our Apollo 15 studies.

Preliminary results on samples from the top, middle, and bottom of a trench dug by astronauts Shepard and Mitchell showed K, Th, and U contents of 4400, 11.5, and 3.3 ppm, respectively, for all three samples. In addition, the ^{26}Al and ^{22}Na contents showed little variation with depth, indicating that the samples were mixed by the astronauts or by some process taking place on the moon. The former conclusion is probably the correct one, since other depth samples such as core tubes have shown the expected decrease with increasing depth. Three samples of breccias ranging in size from 0.046 to 1.1 kg have also been studied. These three samples contain primordial radionuclide contents quite similar to the soil collected in the same region.

Data on five more "walnut-sized" rocks will be available in the coming month. This survey of such small rocks may prove extremely valuable, since the measurements are nondestructive, yet may serve to disclose a rock of unusual chemical composition. It may be noted that such a survey by our group during the Apollo 12 preliminary examination showed clearly that lunar sample 12013 was dramatically different from all lunar samples previously examined.[15,16]

K, Th, and U concentrations and cosmogenic radionuclide abundances in two soils from Apollo 15: preliminary information. Because there were no quarantine restrictions imposed on samples from Apollo 15 and also that there were no intense solar flares closely preceding the mission, we were offered a unique opportunity to study the galactic cosmic-ray production rates of some short-lived nuclides which previously had been detected chiefly as products of solar cosmic-ray bombardment.

Upon a recommendation by the Lunar Science Analysis Planning Team and approval by NASA headquarters, we received two Apollo 15 samples on August 11, followed by two more on August 27 (only 9 and 25 days after removal from the lunar surface). The preliminary results are given in Table 4.1. Because of the preliminary nature of the present results, we have assigned rather large errors. We hope to reduce some of the uncertainties after we complete our calibrations with exact library spectra.

A preliminary estimate of the ^{48}V concentration in LS 15016 leads to a galactic cosmic-ray production rate for ^{48}V of about 50 ± 15 dpm/kg of iron, assuming an FeO concentration of 23%. For comparison, our Apollo 12 estimate[14] was 40 ± 10 dpm/kg of iron.

This is a cooperative project between G. D. O'Kelley of the Chemistry Division and the Analytical Chemistry Division; E. Schonfeld of NASA-MSC, Houston, Texas, is a contributor to this last section of this report.

14. G. D. O'Kelley, J. S. Eldridge, E. Schonfeld, and P. R. Bell, "Cosmogenic Radionuclide Concentrations and Exposure Ages of Lunar Samples from Apollo 12," *Proceedings of the Second Lunar Science Conference, Geochim. Cosmochim. Acta,* vol. 2, in press.

15. G. D. O'Kelley, J. S. Eldridge, E. Schonfeld, and P. R. Bell, "Abundances of the Primordial Radionuclides K, Th, and U in Apollo 12 Lunar Samples by Nondestructive Gamma Ray Spectrometry: Implications for Origin of Lunar Soils," *Proceedings of the Second Lunar Science Conference, Geochim. Cosmochim. Acta,* vol. 2, in press.

16. Lunar Sample Preliminary Examination Team, "Preliminary Examination of Lunar Samples from Apollo 12, *Science* **167,** 1325 (1970).

Table 4.1. Radionuclide concentrations in Apollo 15 samples

Sample	Weight (g)	Type	Location	K (ppm)	Th (ppm)	U (ppm)	^{26}Al (dpm/kg)	^{22}Na (dpm/kg)	Remarks
15016,0	923.7	Basalt	Seatbelt[a]	385 ± 35	0.49 ± 0.05	0.14 ± 0.02	85 ± 12	30 ± 8	Also ^{54}Mn, ^{48}V, ^{46}Sc, ^{60}Co
15495,0	909.0	Basalt	Dune crater	450 ± 40	0.55 ± 0.05	0.15 ± 0.02	66 ± 9	27 ± 6	Also ^{54}Mn, ^{46}Sc, ^{56}Co
15101,1	115.6	Soil	Saint George crater	1450 ± 130	3.2 ± 0.3	0.86 ± 0.08	120 ± 18	44 ± 8	Also ^{54}Mn, ^{56}Co
15601,2	204.3	Soil	Hadley rille	900 ± 95	1.8 ± 0.2	0.49 ± 0.05	108 ± 15	57 ± 8	Also ^{54}Mn, ^{46}Sc, ^{56}Co

[a]Seatbelt (station 3) was about 1200 m SSW of the LM on EVA 1.

COOPERATIVE ISOTOPES PROGRAM

The continuing joint program of the Isotopes and Analytical Chemistry Divisions is concerned with characterization and analysis of isotopes. Varied and growing uses in such fields as medicine, environmental sciences, and industry make our program meaningful locally, nationally, and internationally. Technical assistance includes writing and reviewing papers and reports, giving information and answering inquiries – in-house and external – on properties and analysis of isotopes, in part through the Isotopes Information Center.

The majority of recipients of the *Isotope User's Guide* who responded to a questionnaire found "very useful" the sections on characteristics and standards which were prepared in this program. We are gathering information for a revision which will include – in addition to updated decay-scheme data – x-ray intensities and specific gamma-ray constants for nuclides where those radiations are important. Inquiries were on subjects as diverse as half-lives and gamma percentages, graphs of compositions of complexes of various elements, helium and heat outputs of a ^{241}Am source, production of radionuclides by photonuclear reactions, radioreagent methods, and many others.

Our characterization studies this year included determinations of half-lives as usual, notably ^{99}Mo, 66.02 h, ^{155}Eu, 4.96 y, ^{181}W, 121.5 d, and ^{203}Hg, 46.8 d. Interest has developed locally and in ASTM committee E-10 in the use of silver as a neutron flux monitor. Samples of silver were irradiated in the ORR with and without cadmium shielding, and measurements of ^{110m}Ag and ^{60}Co monitor activities were made in three laboratories. F. Kam, who is developing a standard method for E-10, calculated that the thermal cross section of ^{109}Ag for production of ^{110m}Ag is 4.0 barns, and the resonance integral is 64, in agreement with our earlier determination of 4.1, and estimate of 70 respectively. From mass-spectral data on a sample of irradiated ^{58}Ni, the effective capture cross section of ^{59}Ni has been estimated to be 85 barns, and the optimum irradiation time for production of ^{59}Ni was calculated to be ~200 days at a neutron flux of 2×10^{15}.

One important aspect of our quality control studies is concerned with the purity, chemical form, and performance of ORNL isotope products. We reviewed analytical methods and recent results in connection with raw material for ^{90}Sr production. The methods are essentially as listed in a report,[17] with the addition of spark source mass spectrometry. Our conclusion was that present techniques are satisfactory, provided that the unique elemental and isotopic compositions of the material are taken into account.

A survey was made of techniques for measurement of traces of ^{85}Kr in inactive gases. The present routine method consists of gamma-spectrometric determination of the 0.51-MeV gamma radiation (0.42%) from a sample of approximately 5 ml. The sensitivity, as background-equivalent concentration, is 4 μCi/liter. If a 3-in.-diam by 2-in.-high cylindrical container were used, the sensitivity would be 0.2 μCi/liter. Beta counting of a 10-ml thin-window capsule would lead to a sensitivity of 0.05 μCi/liter, while internal beta techniques, liquid scintillation, and gas proportional counting, would have even better sensitivities. To avoid the necessity of developing special methods and equipment, it was

17. R. Shor, R. H. Lafferty, Jr., and P. S. Baker, eds., *Strontium-90 Heat Sources*, ORNL-IIC-36 (May 1971).

decided to continue to use the present technique, unless new requirements necessitate a more sensitive one.

With respect to returned stable-isotope material, our specified limit of gamma activity equivalent to 0.001 μCi of ^{137}Cs was supported by an independent decision of CERN,[18] that items of less than 1000 pCi/g specific activity are regarded as inactive ..."

Our experience is of use to national organizations through participation in the work of technical committees. For ASTM committee D-19, a gamma spectrometry method was extensively revised, and material was prepared on standards, statistics, and calculations for inclusion in a general procedure for radioactivity measurements. Two methods for neutron flux measurements were reviewed for ASTM committee E-10. Quality-control practices and a draft of a brochure on standards were reviewed for a commercial supplier of radioisotopes. Our major quality-control efforts continued to be devoted to radioactivity measurements, particularly standards. During the past year, fourteen calibrated preparations of eight radionuclides were obtained from NBS, the British RCC, the French CEA, and three commercial suppliers. Good agreement was achieved with the measurements by the standardizing laboratories, but none of the commercial preparations were satisfactory. Obtaining ^{35}S and ^{110m}Ag standards from several suppliers was done as a result of suggestions from the NRC standards panel members, and, in addition, ASTM committee E-10 was interested in the ^{110m}Ag standards. In recent months, attention has been concentrated on NBS traceability for local calibrations, in accord with final recommendations of the panel. Standards for seven of the eight nuclides were obtained from NBS, and the eighth, ^{110m}Ag, is expected to be available soon. One was a point source of ^{109}Cd, useful for calibration of dose-rate instruments for low intensities of low-energy gammas, x rays, and bremsstrahlung. The source, which contained ~13 μCi, was calculated to give a dose rate of 0.80 mR/hr at 5 cm, almost entirely krypton x rays of an average energy of ~22 keV.

To confirm the consistency of measurements with the 4π ionization chamber, readings were made of four ^{137}Cs sources and a 5-μg ^{226}Ra standard, which had been read by another person about 12 years earlier. The cesium readings were normalized to that of radium, correcting for 0.5% decay in the latter. Using our value for the half-life of cesium, 30.18 y, the calculated values agreed with those observed within −0.2% to +0.2%. This result is consistent with the previous observation that the precision is about 0.2% at the activity level involved, provided proper readout techniques are used.

We are preparing a report on ORNL calibrations, especially as related to NBS, and containing a brief history of the work during the past quarter-century.

On the broader scene, the National Academy of Sciences published the report[19] of the ad hoc panel on standard radioactive materials, based in large part on our survey[20] of national needs. Over 700 copies of the panel report have been distributed to selected individuals and institutions. Its recommendations, supported by other groups, have influenced policies at the National Bureau of Standards (NBS), and actions by organizations concerned with radioactivity.

We are increasingly called upon to supply or exchange information on standards. Such contracts included IAEA, EURATOM, Australia, Canada, England, France, and Japan, as well as several in the United States. We arranged a session on standards for a national ACS meeting, supplying two of the papers, and gave assistance with a similar session for a meeting of ANS. S. A. Reynolds has been asked to serve as advisor to the ANS Information Center on Nuclear Standards, and to join the newly formed standards committee (ANS-16) of the Isotopes and Radiation Division. We shall continue to take part in disseminating information until, hopefully, an office or center for this activity is established at NBS, and we plan to share in the work of preparing a simple manual on calibrations, acceptable to the several organizations active in that field.

NEW FACILITIES AND EQUIPMENT

Systematic survey of photon-activation sensitivities at the ORELA. The Division's facility for photon-activation analysis[21] at the Oak Ridge Electron Linear Accelerator (ORELA) was used for the first time September 24, 1970; it provides for bombardment of samples in a new type of "rabbit" system[22] with

18. M. Hoefert and J. Baarli, "Some Particular Aspects of the Problem of Radioactive Wastes in Large Accelerator Installations," *Health Phys.* 19, 78 (1970).

19. *National Uses and Needs for Standard Radioactive Materials,* National Academy of Sciences, Washington, D.C., 1970.

20. S. A. Reynolds, *A Survey of Needs for Radioactivity Standards,* ORNL-TM-3239 (September 1970).

21. W. S. Lyon et al., *Anal. Chem. Div. Annu. Progr. Rep. Sept. 30, 1970,* ORNL-4636, p. 29.

22. E. Ricci, T. H. Handley, and M. G. Willey, "Fluid Supported Capsule Holder for Homogeneously Irradiating Samples," U.S. patent 3,549,492 (Dec. 22, 1970).

Table 4.2. Photon-activation analysis sensitivities and specific activities at ORELA's Analytical Chemistry Division facility[a]

Element (target)	Product nuclide[b]	Measured gamma ray (MeV)	Sensitivity (cpm/μg)	Specific activity (dpm/μg)
O (PbO)	^{15}O	0.511	1115	4750
Ni (Ni)	^{57}Ni	0.511	48.8	452
		1.37	18.8	
		1.89 + sum	1.87	
Cd (Cd)	^{105}Cd	0.511	37.9	161
	^{111m}Cd	0.150 + 0.247	465	1715
	^{115}Cd	0.49 + 0.53	5.37	
	^{115m}In[c]	0.335	9.19	119
	^{112}Ag	0.617	2.74	68.3
Pb (PbO)	^{204m}Pb	0.912 + 0.899	4.87	37.5
	^{203}Pb	0.279 + 0.401	127	777

[a]For a one-half-life or a 2-hr bombardment (whichever is smaller) for 140 MeV, 30 kW at ORELA; samples are counted in Lucite annihilation sandwich through 1.24-cm Lucite absorber directly placed on a 7.62 × 7.62 cm NaI(Tl) detector. Errors are 10 to 26%.

[b]All (γ,n) products; except ^{112}Ag from (γ,p) reaction; ^{111m}Cd and ^{204m}Pb partially and totally originated by (γ,γ') processes respectively.

[c]Daughter in transient equilibrium with parent ^{115}Cd.

140-MeV electron bremsstrahlung. Since that date, we have continuously been using this facility to appraise its capabilities and to gain handling experience, thus improving its performance; ORNL's Nuclear Data Project has also repeatedly used this new system, and two other divisions, Physics and Chemical Technology, are planning irradiations.

Photon-activation analysis has been proved to be a good complement to its neutron-activation counterpart.[23] Indeed, many elements – such as carbon, nitrogen, oxygen, fluorine, cadmium, lead, etc. – whose analysis by the latter method is difficult, display very good sensitivities for the former. As a consequence, we began a survey of experimental sensitivity values for photon-activation analysis at the ORELA facility. Aside from the above elements, the survey will include others that have intermediate sensitivities for neutron-activation analysis; for example, sodium, magnesium, aluminum, silicon, phosphorus, sulphur, chlorine, potassium, calcium, iron, nickel, zinc, strontium, yttrium, zirconium, tin, mercury, and bismuth.

23. G. J. Lutz, "Photon Activation Analysis – A Review," *Anal. Chem.* **43**, 93 (1971).

Table 4.2 shows some results we have obtained so far for oxygen, nickel, cadmium, and lead. Sensitivities are very good for oxygen and cadmium (low-energy gamma rays of ^{111m}Cd), and still quite satisfactory for lead (^{203}Pb) and nickel. From these data we conclude that, though the best sensitivities are attained for some elements by counting of annihilation (0.511 MeV) radiation, this is not always the rule; thus there is a real possibility of reducing interference problems by gamma spectrometry. We also observe that (γ,n) reactions are the most probable and, therefore, the most useful for activation analysis, while (γ,γ') and (γ,p) reactions are less frequent. These data – indeed similar to those reported for irradiations at lower bremsstrahlung energies[3] – indicate so far that neither unusual sensitivities nor higher degrees of interference may be expected for 140-MeV photon-activation analysis. We attribute the somewhat large errors affecting a few of these determinations to initial difficulties with the spinning-precessing movement of the "rabbit" sphere; work is currently underway to solve this problem.

Self-loading tritium targets for 14-MeV neutron productions. A self-loading tritium target has been designed and tested. This new concept in neutron generator target promises to eliminate the problem of constantly decreasing neutron yield of commercially available generators and make practical the use of high current duoplasmation ion sources to increase the 14-MeV neutron flux available without a decrease in target life.

Conventional neutron generators bombard a titanium tritide layer (400 to 4000 $\mu g/cm^2$) on a copper backing with 150-to-200-keV deuterium ions to produce 14-MeV neutrons via the $^3H(d,n)^4He$ reaction. Under constant bombardment the neutron yield decreases as a result of three reactions: (1) the consumption of tritium in the nuclear reaction, (2) the sputtering away of titanium from the target by beam heating, and (3) the replacement at elevated temperature of the tritium in the target by the incident deuterium ions. The dominant reaction is the third one and it reduces the neutron yield at a rate so that the neutron yield decreases by a factor of 2 after about 1400 μA-hr. To prevent this loss of tritium we have designed a target such that gaseous tritium is held in a reservoir and allowed to diffuse into the target from the back. Thus the surface of the target receives a steady supply of tritium to constantly regenerate the reaction volume.

To evaluate the diffusion concept an experimental target was constructed. The target consisted of a palladium-silver (80:20) foil 2.7 cm in diameter and 0.5 mm thick coated on the front face with titanium metal (369 $\mu g/cm^2$). This foil was then incorporated into a

brass holder that provided for a gaseous tritium reservoir behind the foil, two thermocouples to monitor the foil temperature, and an annular cooling water channel. The tritium-filled assembly was then mounted on the accelerator so that the ion beam impinged on the titanium-coated foil face. The optimum titanium thickness was calculated to be 150 $\mu g/cm^2$ but this thickness was inadvertantly exceeded during fabrication.

The performance of the target was monitored while it was subjected to a 400-μA beam of 125-keV $^2H^+$ ions from a Cockcroft-Walton accelerator equipped with an RF ion source. The neutron yield was monitored by means of a "long counter" that had been calibrated against aluminum foil activation ($^{23}Al(n,\alpha)^{24}Na$ σ = 118 mb). The target temperature was maintained constant by flow rate control in an annular cooling coil on the target assembly. The neutron yield was observed to rise from near zero to a maximum of 1.8×10^7 neutrons sec^{-1} μA^{-1} after a bombardment of 1 hr. After 12 hr of bombardment the neutron yield had decreased to 1.2×10^7 neutrons sec^{-1} μA^{-1}. A 1-mg cm^{-2} Ti-^3H target under the same conditions produced a maximum neutron yield of 3.5×10^7 neutrons sec^{-1} μA^{-1} but had decreased in yield to 0.8×10^7 neutrons sec^{-1} μA^{-1} in only 4 hr. The absolute neutron yield of the self-diffusing target and the conventional target were equal after 2 hr of bombardment. It is felt that with future targets of this type the neutron yield can be improved. The target evaluation was terminated when we exhausted the tritium supply and burned a hole in the target foil.

Due to a shortage of funds no further research in this type of target was conducted by the Analytical Chemistry Division. Fortunately the Health Physics Division has continued the research and has been able to increase the neutron yield. The development of this new concept will be valuable in 14-MeV neutron activation analysis and 14-MeV neutron reaction research.

High-flux activation analysis laboratory. Installation of this pneumatic tube facility was completed in February 1971. After some difficulties necessitating several minor modifications, the system now functions as expected, and we have begun to accumulate some experience in its use. We have carried out activation analysis on a variety of materials including fish, coal, coal ash, grasshoppers, blood, human placenta, graphite, and copper. Rather than multielement analysis, most of these materials have been measured for specific elements, for example, arsenic in grasshoppers, mercury in coal, etc. Arsenic was measured in grasshoppers as a service for an ecology project in which the mortality rates in grasshoppers caused by various arsenicals was being explored. The determination of mercury in biological tissue is one of the more challenging analyses. Because of the large amounts of ^{24}Na and ^{82}Br induced in most biological materials, it is nearly impossible to measure other nuclides having similar or shorter half-lives. Presently, chemical separations are being used before mercury is measured; however, we have tested nondestructive techniques and believe that one in particular shows promise for mercury determination.

Because of its high neutron flux (6×10^{14} cm^{-2} sec^{-1}) and high gamma heating rate (6 W/g) this pneumatic irradiation system seems nearly qualitatively different from similar facilities. Although calculations indicated that, because of high heating rates, plastic rabbits would melt in about 1 min, we have irradiated empty plastic rabbits for 30 min and expect that 1 hr would be feasible. We have also irradiated, for 15 min, several plastic rabbits containing about 100 mg of dried human blood. Difficulty was experienced with one of these irradiations, but we do not believe the sample material caused the problem. We have made rabbits of high-purity graphite and found them to be suitable irradiation containers. Because of the high heating rates of high cross section and/or fissionable materials, we must practice extreme caution and prevent irradiation of these materials. A report describing the facility and safety practices necessary for its use is being prepared.

Compilation of nuclear data for Ge(Li) gamma spectrometry and computer-controlled data-acquisition system. We have continued to update our table of nuclear data (energies and branching ratios) and now have data for over 490 radionuclides produced by fission, neutron capture, and charged-particle reactions. To make the data available to others, we plan to publish it as a laboratory report. Additionally, to permit others to incorporate the tabulation into computer programs [e.g., programs that resolve Ge(Li) gamma spectra], data can be supplied on magnetic tape.

When our Nuclear Data 50/50 System was delivered it was immediately obvious that the software package supplied was extremely weak in data reduction and storage. Programs were written to punch and read data in ASCII format. Options included odd or even parity, long-word and short-word error checks, and a tag word for identification. A program was also written to plot gamma-ray spectra on a Brown recorder using 4-cycle semilog paper. These routines were incorporated into the Nuclear Data software package.

Programs written to operate with the System Monitor include a program to read and write file-structured data onto magnetic tape and an automatic peak locating and

integration routine. This program also determines the centroid, counts per sec, gammas per sec, and energy of the peak. Presently, this program is being revised to allow easier addition of other routines and to make it less restrictive in its use.

COOPERATIVE RADIOCHEMICAL STUDIES

Fission products in HTGR coolant circuits. We are assisting the ORNL HTGR Nuclear Safety Project (coordinated by H. J. de Nordwall) in a study of the fission products in high-temperature gas-cooled reactors. This project is concerned with describing and explaining the release into, and the transportation, distribution, and adhesion of fission products in, HTGR helium coolant circuits. Our effort has been primarily in gamma spectrometry of primary circuit components of the Peach Bottom reactor at Delta, Pennsylvania. Twice, a high-resolution gamma spectrometer has been taken to this reactor – once with and once without the reactor operating. From these experiments it has been demonstrated that most of the short-lived fission gases as well as the longer-lived fission products deposited in the primary circuit can be measured in situ during reactor operation. We are therefore able to discount the contribution of the gases to deposited activities and estimate the release rates of metallic fission products, for example, ^{137}Cs, from the reactor's fuel.

Profiles of radionuclides in gaseous diffusion tubes operated in this reactor have also been determined. From these results we are able to derive time-averaged amounts of radionuclides that circulate in the coolant as well as ascertain which activities are transmitted as atomic-sized species and which as larger dust-sized particles. Work in progress includes examination of dust from core I and core II and quantitative resolution of spectra taken on large ducts of the primary circuit.

Applied gamma spectrometry. The study of fission product release from reactor fuel microspheres is a cooperative and continuing program with the Reactor Chemistry Division. We are measuring the release rate of ^{134}Cs, ^{137}Cs, and ^{90}Sr from various types of coated microspheres at temperatures ranging from 1250 to 2200°C. The release rate is measured on individual microspheres and bonded beds. The graphite crucible we used presently holds eight individual microspheres in a tantalum tube lined with graphite so that eight microspheres can be run at the same time. After each heating time the ^{134}Cs, ^{137}Cs, and ^{90}Sr are measured to determine the release rate. The gamma-ray photopeaks are used to determine the absolute ^{134,137}Cs concentration, and the bremsstrahlung is used to measure the relative ^{90}Sr concentration. After the end of the run the ^{90}Sr is chemically separated for absolute measurement. The release studies are continuing on the bonded beds with measurement of ^{137}Cs after several hundred hours of heating time, and the tantalum collection tube is scanned for deposition sites of the ^{137}Cs and ^{134}Cs.

In 1967 we examined several samples of bismuth metal from two different vendors for low-level radioactivity; the material was intended for use in shielding a gamma-ray telescope.[24] Bismuth-207 (0.1 pCi/g of powder) was observed in every sample and it was only after receipt of new material marked "obtained from virgin ore" that a satisfactory bismuth-free product was obtained.

Recently, bismuth specimens for a similar application were received and again ^{207}Bi (0.1 pCi/g) was seen. We have now seen ^{207}Bi contamination in bismuth from four different vendors, including one from Japan. We have also observed it in a commercial bismuth compound (Cerrobend) used in pipe bending. Bismuth-207 can be produced from bismuth by an $(n,3n)$ reaction; in addition it has been observed in fallout.

Bismuth-207 can also be produced in cyclotrons but this implies recycling of reclaimed bismuth. Some bismuth is obtained from the anode sludge from the electrolysis of lead ores, so a possibility exists of fallout contamination. Since the annual consumption is several million pounds it seems highly unlikely that the same level of activity could be sustained over a 4½-year period. Bismuth-207 has never been reported as a member of any decay chain, so it seems doubtful that it arises naturally. There are at least three sources of bismuth: lead ores, copper ores, and some tungsten ores. It is hoped that authenticated samples from each of these sources can be obtained and the source of the ^{207}Bi proved.

Separations and activation analysis. Cooperation with members of the Physics Division has continued in the study of the systematics of nuclear decay. We have contributed expertise in separation chemistry involving procedure in ion exchange, extraction, distillation, and electrodeposition. The separations were made on cyclotron targets which were highly radioactive, and many separations had to be completed in a very short time. Conversion electron spectra from the decay of ^{131}La, ^{132m}La, ^{153}Dy, ^{155}Dy, ^{158}Er, and ^{161}Er were studied. We have observed new transition information in the energy region below 1 MeV, including energies,

24. J. F. Emery, "Applied Activation Analysis," *Anal. Chem. Div. Annu. Progr. Rep. Oct. 31, 1967,* ORNL-4196.

relative intensities, and multipole orders. Partial level schemes were reduced for ^{155}Tb, ^{153}Tb, and ^{158}Ho; previously proposed low-energy levels of ^{101}Ho and ^{131}Ba were corroborated, and isomerics confirmed in ^{132m}La. This work will be submitted for publication in the open literature.

Work has continued during the year in routine 14-MeV neutron activation analysis. The types of analysis that have been performed include: determination of oxygen in refractory metals, lithium, potassium, cesium, UO_2 Ca-Zr mixed oxides, U-Si-C microspheres, and meteorites; determination of Fe and Si in coal and coal ash; and determination of atom ratios in a variety of compounds.

The program was halted for a period of two months due to the failure of a capacitor in the high-voltage transformer of the neutron generator. Replacement of the faulty component restored operations to normal.

5. Analytical Instrumentation

D. J. Fisher, Group Leader
R. W. Stelzner, Assistant Group Leader

M. T. Kelley[1] W. L. Maddox T. R. Mueller Rebecca Porter[2]

COMPUTER ANALYTICAL SYSTEMS

FOCAL systems for the GeMSAEC and other analytical instruments. During this year we have continued to improve the 4K FOCAL system program for the GeMSAEC Rapid Photometric Analyzer. By changing the reentry point in FOCAL after calling a new program, we found it possible to eliminate the previous restrictions on program format and to call any program or part of a program as a subroutine of the current program. In the revised system the commands are as follows: L P 10 stores a program, L G 10 calls a program but returns control to FOCAL, L G 10, G calls the program and starts it at its beginning, while L G 10, G 5.13 calls the program and starts it at line 5.13. The program number is converted to a disk address at which the program is stored. As before, the L command alone recalls the Disk Monitor and passes control to it. As with the earlier version, this 4K FOCAL system provides a fixed-length text storage space of 1000_8 words, a single-precision data storage space of 500_8, and a space of 431_8 for floating point FOCAL variables.

In addition to the use of the GeMSAEC for end-point determinations, and for kinetic reactions of moderate rates (such as for enzymes) in both cases using absorptiometry as the method of measurement, there is also an interest in using the GeMSAEC to measure very rapid chemiluminescent reactions. In these the emission of light rises very rapidly to a peak and then decays with half times ranging from a fraction of a second to ten or more seconds. The light emitted is very weak compared to the intensities used for absorptiometry with the GeMSAEC. Preliminary experiments indicated that optimum results would be obtained by integrating the light intensity over a period encompassing a major portion of the peak. A new FADC function was written for FOCG which takes and sums 16 readings (8-bit ADC setting) on each cuvette as it passes at approximately 1000 rpm, skips a specified number of revolutions, then repeats the procedure for up to 22 sets of data. A clock reading is also taken at the beginning of each set of data. This special FADC function for FOCG is written so that it can be stored on the disk in a space that normally is occupied by FOCAL text. When FOCG is called from the disk, the computer is halted and then restarted at address 3220 to implement the special FADC function. The FOCAL program written for chemiluminescence measurements takes measurements at intervals of integral numbers of revolutions, prints out times for the beginning of each set, then prints out the light-emission readings corrected for dark current, sums the readings (approximates the peak area), fits the readings for a set of calibrating standards to a parabolic curve, then calculates and prints the concentrations of samples based on this curve. Using a 100-Hz clock, measurements can be made on reactions with half times as short as 0.2 sec.

Using the same principles of program interchange, the FOCAL system for the 8K-PDP-8/I with two disks interfaced to a GeMSAEC in the Health Division was modified to enlarge the double-precision data storage space in core. The unit is used jointly also by Chemical Technology Division personnel involved in development of new GeMSAEC procedures and hardware. This revision permits the storage in core of up to 24 sets of double-precision data for a 42-place rotor. The FOCAL operating programs were then revised to provide added operating convenience for routine operation by the medical technicians. A system of short starting tapes to enter the initializing parameters for various procedures

1. Part time.
2. Summer Student Trainee, Lenoir Rhyne College, Hickory, N.C.

was introduced to minimize the manual teletype entries required and thus to reduce errors. Special programs were written to correct for variable blanks in glucose determinations and to adjust the time interval for measurement in enzyme determinations to the optimum for each sample. Also, since special rotors for zero gravity use are being developed with possibly 8, 9, 15, 16, or 17 cuvettes, all operating programs were revised to operate with these as well as the 42-cuvette rotor.

On the 4K computer we have implemented another version of FOCAL, designated FODK, which provides disk storage of data, a line and point plotting mode on an *X-Y* recorder, as well as real-time clock functions. This version also has a set of extended functions, sine-cosine, exponential, and logarithm, which can be deleted in the order listed to provide more variable space when needed. The arc tangent function is omitted since it is almost never used by chemists and a revised logarithm subroutine is used which attains six-digit precision with only six arbitrary constants rather than eight thus freeing some 20 additional words of memory. This version of FOCAL has been used routinely for plotting particle-size distributions obtained from a Coulter counter where the ability to store up to 540 data points was essential. Also, programs written for this version of FOCAL have been used to plot ESCA data obtained on punched paper tape from the PDP-8 on the ESCA instrument. A short program written for the ND-812 computer was used to convert the tapes to a format acceptable to FOCAL, then the data was plotted with the 4K PDP-8/I. The plotting programs provide selection of optimum scale factors, drawing in scales, and plotting points with the standard deviation indicated for each point. The programs also offer the option of applying a smoothing function and replotting if desired. A portion of this work has been reported in two papers.[3,4]

Program and data storage. Primarily to serve as a backup unit for the disk in the 4K-GeMSAEC system, a Tennecomp TP-1371 cartridge tape unit was purchased. Programs were written to enable storing the disk contents on ¼ in. magnetic tape and reloading the disk. This operation requires about 105 sec exclusive of rewind time, thus very effectively circumventing the lengthy operation of reloading the disk contents via paper tape in case the contents are lost. We have also shown that it is possible to operate the GeMSAEC using the 4K computer and the Tennecomp unit as complementary storage. The FOCAL system program can be loaded from a 4K capacity tape cartridge using a short loader program on paper tape. This operation requires about 1 min. This version of FOCAL is essentially FOCG in which the disk transfer routine has been replaced by a cartridge tape routine. The same type of commands are used, for example, L G 2, G 1.1, only in this case the identifying number is the track number on the tape. Since the storage of 1000_8 words of text can be accomplished in about 2.2 sec, we found that by using cartridges specially loaded with a minimum length (23 in.) of tape the total time for transferring from one program to another could be reduced to ~3 sec. To be sure, this is considerably more than the 100-msec time for disk access, but in many cases it can be entirely adequate. Also because of the plug-in nature of the tape cartridges more storage capacity can be provided at lower cost if the longer access time is acceptable.

The advent of cassette-type tape recorders offers the possibility of very inexpensive program and data storage for the small computer. Park[5] has described a system for using such a recorder which we have found possible to implement with some changes on the 4K PDP-8/I. The interface consists of a one-shot multivibrator (~40 μsec) to supply the recording pulse, with an R-S flip-flop and two gates comprising the reading interface, requiring a total of six NAND gates. The system uses software control of the conversion of the 13-bit words to suitably spaced sequential pulses. Each bit is preceded by a timing pulse so that considerable variation in tape speed (±25%) can be tolerated. Using an inexpensive Westinghouse TMC 8030 tape recorder, chosen primarily because it did not have automatic level control, we found it possible to transfer the entire content of a 32K disk to tape in ~150 sec at the standard cassette tape speed of 1⅞ ips. This represents a recording density of nearly 3000 bits per inch. The programs required for recording or reading are approximately 150 words in length (a little more than one page). A similar system has been implemented for the Nuclear Data ND-812 computer, although, to date, the recording rate obtained is considerably lower. This system of data or program storage is inexpensive, and seems to be at least as reliable as paper tape and certainly much faster and easier to handle and store. However, it does lack computer control of the tape

3. M. T. Kelley and J. M. Jansen, "Programming Concepts for the GeMSAEC Rapid Photometric Analyzer," *Clin. Chem.* 17, 701 (1971).

4. M. T. Kelley, "A Simple Monitor for Disk Storage of FOCAL Programs with Flexible Subroutine Linkage," *Proceedings of the Spring 1971 DECUS Meeting, Atlanta, Georgia, May 13, 14, 15, 1971*, pp. 53–57.

5. J. J. H. Park, "Low Cost High Speed I/O for the PDP-8 Family," DECUSCOPE 10(3), 2 (1971).

transport which is possible with more elaborate commercial cartridge or cassette tape units.

Programming for the ND-812. During this period, a Nuclear Data computer with 8K-12 bit word core (ND-812) was acquired primarily for the analysis of X-ray spectra from the scanning electron microscope. Programming for this computer has been limited to writing a paper tape punch program, a program to convert ESCA data tapes, and a program to store and reload programs with a cassette recorder. The experience gained in these programs will be valuable in making desired revisions in the X-ray analysis programs.

PDP-8/I programming. Large quantities of data that require considerable data reduction are generated in the laboratories of the Tobacco Smoke Program. Programs for an 8K PDP-8/I were developed to computer assist in handling the data using the interpretive language FOCAL. Two approaches were used. In the first, a new FOCAL function, FP (arg_1, arg_2), was designed to store and call arrays from the magnetic disk. Either three- or four-word floating-point variables can be put on the disk, with a single argument representing a GET, and a double argument, a PUT. Up to 1235_{10} three-word variables, or 926_{10} four-word variables, can be stored on tracks 16 and 17 of the disk without interference to the swapping area.

In the second approach, a MODV overlay allows FOCAL variables and text to be stored in FIELD (1) of the core memory with the PushDownList remaining in FIELD(0). No disk storage is needed.

A typical problem requires the sorting of a set of up to 200 cigarette weights into subsets of four cigarettes, with each individual weight to be within ±20 mg of the mean for the entire set, or within ±20 mg of a preselected weight. The mean value of the subset should be as close as possible to the mean of the entire set, or the preselected value. This problem was solved using a FOCAL program and the FP function.

We have written 8K FOCAL programs for producing comparative data tables for inclusion in reports. The tables of tobacco smoke data are computer typed in three parts and then assembled into a single report for photographing. Chemical analysis data for the different cigarettes furnish information to the computer for sorting tables according to rank. The hard and tedious jobs of ranking and typing tabular results have been eliminated. Analyses made by the General Analyses Laboratory for a Chemical Technology Division solvent extraction study require flame-photometric determination of Li^+ on 15 samples taken at equal time intervals. Since the data show considerable scatter, least-squares curve-fitting (LESQ) techniques were used. Equations of the form: $y = ax^3 + bx^2 + cx$, and the general cubic: $y = ax^3 + bx^2 + cx + d$, seem to fit the experimental data better than linear or parabolic equations. Programs to calculate the LESQ coefficients were written in the interpretive language FOCAL (four-word version) for an 8K PDP-8/I computer, with plotting available on-line with a Moseley model 2D2A *X-Y* recorder and off-line with a Hewlett-Packard model 9125A plotter.

An alternative program in which a software digital filter was constructed using an algorithm that fits five equally spaced data points to a 3rd-degree equation was devised. Two passes of the original data through the filter produced a smoothed curve of adjusted data points almost identical to the curve calculated by the general LESQ technique. The General Analysis Laboratory determines the density of small particles by position measurement in a density gradient column. A FOCAL program to fit either a general cubic or quartic equation to the calibration data was developed. We solved the system equations using both Cramer's Rule and a matrix inversion procedure. Once the LESQ coefficients have been determined for calibration data, a density is calculated for each of the experimental measurements, and then the mean standard deviation and relative standard deviation of the set is computer calculated and typed out.

Computer-electrochemical systems. Our study of computer-operated electrochemical systems was continued using the ORNL model Q-2792 controlled-potential dc polarograph and the Q-2943 drop-time controller interfaced to the 8K PDP-8/I computer. Average current values taken at 1-sec intervals (360 data points, each the average of 128 current measurements acquired in 1/60 sec) were entered into the computer via the analog-to-digital converter and a FOCAL FP-function. This function stores the data on the DF32 magnetic disk in floating-point format. A second run on supporting electrolyte alone is entered into the computer, after which a point-by-point subtraction is made to give a resultant polarographic curve freed of residual current. The value for $\bar{i}_D$ is computer calculated from the average of the last 60 data points, along with the standard deviation. The straight line, $\ln[(\bar{i}_D - \bar{i})/\bar{i}]$ vs E (SCE), is then computer calculated and plotted on an *X-Y* recorder to produce a value for $E_{1/2}$. A least-squares method is used in the calculation. We plan to examine next a computer-operated coulometric titration.

Peripheral equipment. We have acquired a portable, remote terminal consisting of a Teletype Corporation model ASR-33 teletypewriter and an Omnitek model

701A telephone coupler, for accessing the ORNL PDP-10 computer in a dial-up, time-sharing mode. The terminal will enable us to process larger arrays of data than could be handled by our mini-computers. A one-week course on the PDP-10, taught at the Laboratory by Digital Equipment Corporation personnel, was attended. Both FORTRAN IV and BASIC computer languages will be used in programming for the PDP-10 with the terminal. With the addition of a DS32 expander disk to our 8K PDP-8/I, we meet the minimum hardware requirements for establishing a PS/8 configuration. This allows us to use now the recently developed (by Digital Equipment Corporation) sophisticated PS/8 software.

INSTRUMENTATION RESEARCH AND DEVELOPMENT

Automatic, controlled-current, coulometric Karl Fischer titrator. A coulometric titrator has been designed with unique features to provide direct measurement for traces of water and which can also be used to standardize and calibrate other on-line methods for water. The first applications will be by the Reactor Projects Group with their modification of the indirect coulometric Karl Fischer method of Meyer and Boyd.[6,7] The immediate need is for in-line determinations of water in the cover gas over the $NaBF_4$ coolant salt for molten-salt breeder reactors. The nominal range of water is 6 to 0.1 mg (60 to 1 coulombs). Since performance is now limited only by the remaining chemical and cell design problems of this application, the absolute standard deviation is expected to be about 1 μg, a tenfold improvement. Also, components were selected to permit operation over a $\pm 10^{\circ}C$ temperature range. Although fourteen operational amplifier subsystems (exclusive of the power supply) are required to implement two automatic modes that we devised to circumvent titration problems, the titrator is built with printed circuit boards with resultant low fabrication and material costs.

In this application, two simultaneous independent coulometric generations of iodine are required: for compensation and for titration of water. The titrator was designed to handle efficiently the following electrochemical requirements and problems of each generation.

Compensation. Before a sample or standard is added to the anode compartment and between titrations, iodine-depleted Karl Fischer reagent is in the cell. That trace of iodine that depolarizes the indicating electrode pair to the experimentally chosen end-point potential must be maintained coulometrically by a compensating current because of small iodine demands caused by side reactions, diffusion from the cathode to the sample compartment of the cell, and leakage of water from the atmosphere. A problem arises because the value that is needed changes slowly with time. This compensation current is also supplied during titrations but only the separately supplied titration current is integrated for readout to achieve the effect of 100% current efficiency. If the compensation current value is correct, the voltage across the indicating polarized electrode pair will remain at the selected end-point potential. The correctness of the current value in use is verified by the titration of standard solutions of water in methanol. In the manual compensation current mode, a constant current is supplied equal to the value set by the user on a digital control dial (see Fig. 5.1). The meter is switched to monitor the resulting polarized electrode pair voltage. The user must find, by trial and error, the current that holds the end point and must frequently check between titrations to see that the cell is being held at the end point. Alternatively, in the automatic compensation current mode, the user sets the value, in millivolts, that he has selected on the end-point potential dial, and an internal electronic servo circuit supplies whatever current is needed to hold his end-point potential. With either compensation current mode, a memory circuit finds the average value supplied during the most recent 200 sec. This value will be provided during the next titration if the automatic compensation mode is selected. The automatic compensation current mode and the memory circuit circumvent the problems caused by the variability with time of the needed compensation.

Titration. After sample or standard is added, during a titration iodine is generated coulometrically by a separate titration current source so that the Karl Fischer reaction takes place with the water. The state of the titration and the approach and the attainment of the end point are observed by monitoring the voltage developed across the platinum indicating electrode pair between which is passed the constant polarizing current (9 to 180 μA) that has been selected by the user. Problems are caused because there are usually several premature end points. In the Titrate Manual titration

6. A. S. Meyer, Jr., and C. M. Boyd, "Determination of Water by Titration with Coulometrically Generated Karl Fischer Reagent," *Anal. Chem.* 31, 215 (1959).

7. M. T. Kelley, R. W. Stelzner, W. R. Laing, and D. J. Fisher, "Automatic Coulometric Titrator for the Karl Fischer Determination of Water," *Anal. Chem.* 31, 220 (1959).

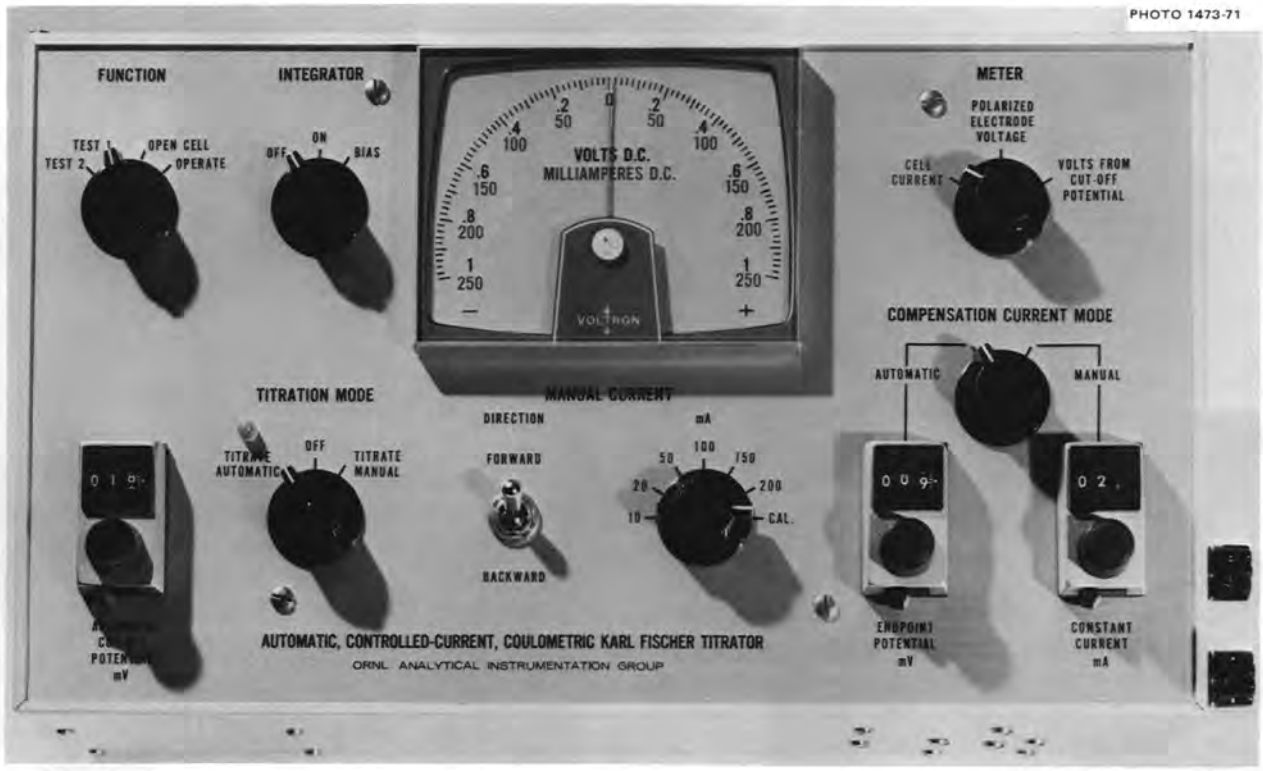

Fig. 5.1. Modes of operation and functional design of controls of automatic, controlled-current, coulometric Karl Fischer titrator.

mode, the constant titration current (backward or forward, 10 to 200 mA in six steps) selected by the user is supplied. If the sample is drier than expected, overtitration may occur even though the user intends to have end-point anticipation by manually stopping the titration at a cut-off potential that is 0.1 to 0.2 V before the end-point potential. Moreover, for each premature end point, a titration current must be manually applied again. The Titrate Automatic titration mode makes it possible for the user to dial in his selected value of automatic cut-off potential in millivolts and automatically obtain a titration current proportional to the wetness of the electrolyte. In addition, the latter part of the titration is automatically done increasingly slowly and the cut-off potential can be set at the end-point potential. Also, the titration is terminated by a detector having unilateral hysteresis. If the voltage across the indicating electrode pair drifts 8 mV above the automatic cut-off potential because of a premature end point, a small titration current is automatically applied to drive the cell electrolyte to a true end point.

Any combination of these four modes may be used at the option of the user. However, preliminary trials show that the two automatic modes will provide superior results.

Figure 5.1 also illustrates the functional legibility achieved by the choices of and arrangement of the controls and by the labeling of control positions. That this objective was accomplished has been demonstrated by the ease of use of this titrator by chemists other than the instrument designers. An external digital voltmeter is used for readouts that are whole-number-proportional to coulombs and to milligrams of water titrated. Other terminals, two internal test functions, an internal calibrating current, a documented check out and test procedures, and performance specifications are provided. With these the performance of all circuits of the titrator can be checked out against specifications, and the integrator and other circuits can also be calibrated. The two internal test functions also enable the user to establish without any auxiliary equipment that the instrument is able to perform all of its operations.

Bias adjustments in the titrator and its calibrations remain unchanged long term (months). An initial evaluation of the titrator, conducted in cooperation with A. S. Meyer and R. F. Apple, showed highly

satisfactory performance. The titrator servo circuits proved very stable with electrochemical loads. There is no interaction of the compensating and titration current circuits. An end point was obtained with the automatic compensation current mode and the Titrate Automatic titration mode that held constant within the equivalent of 1 μg of water during 15 min past the completion of the titration. With this titrator, therefore, we anticipate that water can be determined with less attention from the user and with better precision and accuracy than possible with instrumentation in use in the past.

Parallel-mixing transfer disk for the GeMSAEC analyzer. The transfer disk commonly used in the GeMSAEC analyzer is not suitable for high-speed mixing required for chemical reactions whose half-times are of the order of 0.1 sec. In the conventional disk, the reservoirs for the two liquids to be mixed are arranged in two concentric circles. A third circle has holes which collect the liquids as the rotor is accelerated, directing them into the cuvette. The three circles are located on the radius which meets that cuvette. After the rotor comes up to speed, air bubbles must be drawn back through the filled cuvettes to ensure complete mixing.

We designed a new "parallel-mixing" transfer disk in which distinctly faster mixing is achieved by causing the two liquids to form streams which meet head-on while they are still contained in the disk, and to continue into the cuvete through a common outlet. This disk is a two-layer device, made up by machining the reservoirs as slots in adjacent radii, and machining the outlet tubes for each of these as a shallow groove in the surface of a Teflon base. A cover for this base is cut so that it covers all but a small hole near the center of the assembled disk; this hole is used for filling the reservoirs.

Support work. Support has been given, in cooperation with the ORNL Biology Division, to a National Cancer Institute-sponsored investigation of devices and techniques for improved bioassays of cigarette smoke carcinogenicity. This support has involved participation in the design of apparatus for the generation of fresh cigarette smoke to be exposed to laboratory animals, and in the general design and evaluation of experiments using the apparatus.

For the LWBR Support Program, a new velocity-servo potentiometric titrator was constructed for use by the General Hot-Analyses Laboratory. This titrator consists of an ORNL type Q-1728A control unit and a remote unit whose assembly is depicted in ORNL Dwg. 71-5031. The control unit was modified to take advantage of a solid-state preamplifier discussed earlier.[8] Also, an ORNL model Q-4010 coulometric titrator[9] was built, checked, and calibrated by the ORNL Instrumentation and Controls Division. The instrument, serial No. 6, is in use in the High-Level Alpha Radiation Laboratory.

Development of an air monitor for chlorine and HCl, utilizing electrochemical techniques, for the Office of Air Pollution Programs, Environmental Protection Agency (EPA) is underway. The work was started in April 1971 and is outlined in the Analytical Methodology section of this report.

We have converted a model IX-B[10] photometer amplifier system to respond logarithmically for use with an atomic absorption apparatus. The gain of the system was adjusted on an empirical basis. Sensitivity for the determination of mercury depends on many factors other than amplifier sensitivity. However, present sensitivity is such that 1 ng of mercury is equivalent to 3% of full scale. No attempt was made to achieve maximum instrument sensitivity since no samples have been received for which greater sensitivity is required. The maximum instrument (photometric) sensitivity at the recorder terminals is presently 0.2 V/decade change in photocurrent. The output of the log amplifier is 2 V/decade. An output was also provided for driving an Infotronics model CRS-104 integrator to obtain a printout of peak areas.

Modifications of equipment. An electrochemical cell, when placed into the feedback path of a potentiostat, creates a phase shift in the feedback signal. If this phase shift exceeds 180° before unity gain crossover the circuit can oscillate. For a given set of conditions, stability can be achieved by introducing an appropriate roll-off characteristic with resistor-capacitor networks in the feedback loop. Since electrochemical cells are designed differently for various analyses, the instrument designer cannot anticipate the exact values of resistance and capacitance needed to achieve stability. The Q-3091 potentiostat module used with the ORNL model Q-4010 coulometric titrator was, therefore, fitted with external terminals to which the necessary components could be attached while the instrument was connected to a titration cell in the laboratory. In

8. *Anal. Chem. Div. Annu. Progr. Rep. Sept. 30, 1970,* ORNL-4636, p. 36.

9. T. R. Mueller, "Coulometric Titrator (ORNL Model Q-4010): Prototype and Instruments for Analytical Services," *Anal. Chem. Div. Annu. Progr. Rep. Oct. 31, 1969,* ORNL-4466, p. 2.

10. M. T. Kelley, C. R. Spell, T. R. Mueller, and R. W. Stelzner, "Digital Flame Spectrophotometry," *Anal. Chem. Div. Annu. Progr. Rep. Oct. 31, 1969,* ORNL-4466, p. 10.

some laboratories two types of cells were used alternately. To relieve the operator of the necessity for connecting and disconnecting these networks, we have brought two sets of terminals to the rear panel of the module where "permanent" networks can be attached (plugged in). These are then switched with the front panel cell-selector (Function) switch. Performance checks indicate that the additional wiring required within the module has not degraded performance.

The Q-2943 cyclic voltammeter[11] has been redesigned to work more reliably in high electrical noise environments. Noise immunity was achieved principally by rearranging existing circuitry so that the counter electrode could be physically connected to power common (ground) without "floating" the dc power supply off ground. Functionally, the instrument fabricated according to the new design is identical to the earlier version with a few minor modifications to facilitate interfacing with a digital computer. The revised instrument is designated ORNL Q-2943A. Its present use is for in-line, computer-operated monitoring of a molten-salt test loop at ORNL. Another Q-2943A is presently under construction. It will be used for continuous monitoring of a molten-salt test loop located at the Y-12 facility. It is contemplated that a simplified version of the instrument might eventually replace this voltammeter, releasing it for research and developmental work. When the instrument currently being fabricated is completed, drawings will be brought up to date.

Other features which have been incorporated in the Q-2943/Q-2943A design are the following: (1) built-in compensation for the portion of the cell resistance not compensated by the potentiostat; (2) amplifier types have been changed in newly constructed instruments to provide state-of-the-art performance at lowest cost; (3) simultaneous, scaled outputs for either current, potential, or time are now available, with continuously variable current-measuring sensitivity; (4) a first-derivative/integrator, plug-in module (designated module E, Q-2943-41) has been provided. The derivative mode has eleven switch-selectable sensitivities, each with an optimized low-pass filter. There are also nine preamplifier high-frequency roll-off curves, and four postdifferentiation gain/roll-off combinations in addition to a variable high-frequency roll-off in the derivative-taking stage itself. These many combinations permit the selection of the best signal/noise performance while maintaining linear, calibrated (±1%) response up to nearly 10 kHz. In the integrator mode of operation, pre- and postintegration roll-off/gain changing capabilities are the same as with the derivative. Integrator time constants from 1 to 1000 sec for a 10-V output are provided in ten steps. Drift rate is less than 1 μV/sec on the 50-sec range. The serial No. 1 instrument has been changed so that in addition to normal, automatic control, sweep direction,and duration can be controlled manually or by computer.

11. T. R. Mueller and H. C. Jones, "Controlled-Potential, Controlled-Current Cyclic Voltammeter," *Anal. Chem. Div. Annu. Progr. Rep. Oct. 31, 1967*, ORNL-4196, p. 1.

6. Methods Development and Evaluation Laboratory

L. T. Corbin, Assistant Director
D. A. Costanzo, Group Leader

J. L. Botts J. R. Lund
L. G. Farrar F. L. Moore
G. Goldberg
P. S. Gouge

CHARACTERIZATION OF LMFBR FUEL MATERIALS

We have continued in our efforts to establish an LMFBR analytical program within the Service Laboratories. The objective of this program is to establish analytical capabilities for the complete chemical characterization of uranium and plutonium nitride, carbide, and carbonitride fuel materials.

Uranium nitride. The Metals and Ceramics Division, working jointly with the NASA-Lewis Research Center, has initiated a "round-robin" program to evaluate and verify methods and techniques to be used to establish the chemical specification and verify the purity of uranium nitride purchased from commercial vendors. The Metals and Ceramics Division has prepared the UN and submitted test portions to ORNL, Ledoux and Company, and NASA-Lewis Research Center for chemical characterization. The major constituents to be determined are: uranium, nitrogen, oxygen, and carbon.

Two methods for the gravimetric determination of uranium were evaluated: (1) direct combustion method in which UN is oxidized in a 3.5% oxygen 96.5% argon atmosphere, and (2) oxidation-reduction combustion method in which the UN is first oxidized in air to U_3O_8, then reduced by hydrogen to UO_2, and finally reoxidized in air to U_3O_8. In the evaluation of the direct combustion method, we observed that high precision could be obtained only under critical control of sample size, temperature, oxygen content of sweep gas, and sample weight.

Two methods for the determination of nitrogen in UN were evaluated: (1) the Phosphoric Acid-Kjeldahl method[1] in which the UN is dissolved in concentrated phosphoric acid and the nitrogen determined by the Kjeldahl distillation and titration, and (2) the modified Dumas method[2] in which the nitrogen is released by oxidizing the UN with CO_2 sweep gas at 1100°C.

The Leco oxygen and Leco carbon methods were evaluated for the determination of oxygen and carbon.

When the round-robin program is completed, the three participating laboratories will select the methods to establish chemical specification for UN and to ensure purity of commercially prepared material.

Plutonium carbide and carbonitride. We worked jointly with the Chemical Technology Division on a program to prepare plutonium carbide and carbonitrides and chemically characterize these potential reactor fuel materials. Forty-seven products, carbide and carbonitrides, were prepared under various conditions of temperature, gas phase composition, and carbon-to-plutonium mole ratio. These materials were analyzed by the above chemical methods and were examined by x-ray, scanning electron microscopy, and the thermogravimetric method.

Three inert-atmosphere glove boxes were placed into service for sample preparation and handling of these reactive materials. The use of inert atmosphere conditions resolved earlier disagreement in material balances, and high oxygen results, and permitted the handling of large quantities of product for physical measurement (porosity and density) and for metallographic examination for microstructure.

MOLTEN-SALT REACTOR RELATED ANALYSES

Determination of bismuth in LiCl and Li-Bi-Th fluoride salts. The inverse polarographic method was used to determine bismuth in the parts-per-billion level

1. D. H. Bollman and D. M. Mortimore, "Determination of Nitrogen in Vanadium Nitride and Uranium Nitride (UN)," *Anal. Chem.* 43, 154–55 (1971).
2. A. Tolk, J. C. Plakman, W. A. Lingerak, and A. Kont, "Determination of Nitrogen in Uranium Nitride by the Dumas Technique," *Anal. Chem. Acta.* 47, 373–76 (1969).

in LiCl and Li-Bi-Th fluoride salts.[3] Bismuth metal is used in the reduction-extraction process developed by the Chemical Technology Division to separate the fission products from MSRE fuel. The presence of parts-per-million amounts of bismuth in the processed fuel could mean a carry over of unwanted fission products.

In this method, bismuth is reduced at a stationary hanging mercury drop electrode to bismuth metal at −0.8 V vs SCE for 3 min electrolysis time. At the end of this time, the potential of the mercury electrode is increased in an anodic direction at a linear scan rate of 0.5 V/min and the current resulting from the oxidation of the bismuth metal recorded. The sensitivity of the method is 1 ng Bi/ml in the test solution. Although standard calibration curves at the parts-per-billion level are nonlinear, the curves are reproducible.

Samples of LiCl and Li-Bi-Th fluoride are dissolved in either HNO_3 or $HClO_4$. Less than 10% of $HClO_4$ or HNO_3 does not interfere with the analysis which is carried out in 1.5 *N* HCl. Copper and molybdenum, when present in ratios greater than 3:1 of metal:Bi, interfere. This method has also been applied to the determination of copper in trace amounts. However, bismuth interferes with the copper determination.

Lithium metal in anhydrous LiCl. A method was developed to determine free lithium metal in anhydrous lithium chloride. The Chemical Technology Division is studying the solubility or distribution of lithium and bismuth metal in lithium chloride in experiments related to the removal of fission products from the MSRE fuel.

In this method, the salt sample is dissolved in water; hydrogen, equivalent to the free lithium metal present, is liberated and is determined chromatographically.

Determinations of helium in boron carbide. The Metals and Ceramics Division has initiated a program directed toward using boron carbide as a control rod material in molten-salt reactors. They are concerned with the retention of helium in irradiated boron carbide.

We are investigating a chromatographic method for the determination of helium in irradiated boron carbide. In this method, the sample is fused with sodium carbonate at about 800°C and the liberated helium is determined by the gas chromatographic technique. Water, if present, reacts with the boron carbide at the elevated temperature and yields hydrogen which interferes with the chromatographic determination of helium. This interference is eliminated by reacting the liberated hydrogen with hot copper oxide to form water which is trapped.

Infrared determination of OH^- in $NaBF_4$ or $NaF \cdot NaBF_4$ salts. The presence and amount of water and/or OH^- in $NaBF_4$ or $NaF \cdot BF_4$ eutectic prepared as a coolant for MSB reactors is of concern to the Reactor Chemistry Division since OH^- can serve as an agent to collect tritium produced in the reactor. M. M. Murray, General Analyses Laboratory, observed the existence of a band at 3643 cm^{-1} in the infrared spectra of $NaBF_4$ and $NaF \cdot NaBF_4$ eutectic which he assigned to an OH^- structure, probably BF_3OH^- ion.[4] He demonstrated that approximately 5 to 100 ppm of hydrogen, as $NaBF_4OH$, can be determined in the fluoroborate salts by use of the thin pressed, self-pellet technique. This method has been used to determine the hydrogen content of some 120 fluoroborate salts during the past year.

Working jointly with J. P. Young, Reactor Projects Group, we tested the possibility of using this method to determine the hydroxyl ion in fuel type salts (LiF, BeFe, ZrF_4, UF_4) by first extracting the hydroxyl ion with $NaBF_4$, and then measuring the 3643 cm^{-1} peak of BF_3OH^- ion in a thin pressed, self-pellet. In one test we were able to extract the equivalent of 35 μg of hydrogen per gram of salt by simply grinding the fuel type salt and $NaBF_4$ together.

SPECIAL PROJECTS: NONROUTINE ANALYSES

Application of the GeMSAEC photometric analyzer. The current interest in automated analyzers prompted us to evaluate the GeMSAEC analyzer for adaptation to analytical methods performed routinely in our Service Laboratories.[5] The first method considered was the spectrophotometric determination of uranium using the azo dye, PADAP, following closely the method developed by Florence.[6] The molar absorbance of the uranium-PADAP complex is equal to 54,000 at 565 nm. The method was scaled down for use on the GeMSAEC analyzer. Although the standard curves are not linear until uranium reacts completely with PADAP (~20

3. P. F. Thomason, "Inverse Polarographic Determination of Bismuth," *Anal. Chem. Div. Annu. Progr. Rep. Oct. 31, 1969,* ORNL-4466, p. 91.

4. J. B. Bates et al., *MSR Program Semiannu. Progr. Rep. Feb. 28, 1971,* ORNL-4676, pp. 94–96.

5. W. D. Shults et al., "Analytical Methodology," *Anal. Chem. Div. Ann. Progr. Rep. Sept. 30, 1970,* ORNL-4363, p. 1.

6. T. M. Florence, D. A. Johnson, and Y. J. Farrar, "Spectrophotometric Determination of Uranium(VI) with 2-(2-Pyridylazo-5-diethylamenophenol," *Anal. Chem.* **41**, 1652 (1969).

min), useful curves were obtained 3 min after mixing. A PDP-8 computer program written by Kelley[7] was employed to obtain a nonlinear fit of the calibration data and to compute the coefficients of the parabolic fitting function used in the computation of the data. The computer program permits one the option to display the absorbance data by means of an *x-y* plotter. At the present time a disk can be loaded (4 standards plus 10 sample aliquots), a standard curve plotted, and results printed out in about 20 min.

Determination of rhodium in Rh-Pt alloys. The Metals and Ceramics Division is attempting to prepare alloys containing tungsten, rhodium, and platinum in the approximate weight percent ratios of 30:10:60. Titanium and hafnium will also be added at the 0.1 to 1% level. These alloys are to be used for the fabrication of container vessels for high-temperature isotopic heat sources.

Since the precise concentration of rhodium in the platinum-rhodium alloys on hand was not known, we were requested to analyze a series of samples for the rhodium concentration. Samples of supposedly pure rhodium were also included for analysis.

Microgram amounts of rhodium give rise to highly colored solutions in the presence of stannous chloride in HCl.[8] Since platinum interferes, it was removed by passing the sample solution through an anion exchange column. The absorbance of the rhodium chloride complex is measured at 475 nm. The molar absorbance of the chloride complex is approximately 3,500.

Platinum-rhodium alloys containing up to 15% rhodium are soluble in aqua regia. However, alloys of higher rhodium concentration and rhodium metal are relatively insoluble. To prepare a rhodium standard, ac electrolyses was employed to dissolve rhodium foil. However, the electrolysis technique could not be employed with the rhodium samples which were in the form of metal chips. Consequently, a portion of a sample was weighed into a porous cup graphite spectrographite electrode. A length of graphite rod was used as a plug for the cup opening. The porous graphite cup assembly served as an electrode and the rhodium dissolved anodically.

Particle size analysis. A particle size analyzer based upon the Coulter technique was evaluated and placed into routine use.[9] The analyzer is provided with a 512 channel pulse-height analyzer for data acquisition, an oscilloscope for visual display of pulse-height analyzer particle distribution data, and an *x-y* plotter and teletype for data output.

To facilitate the interpretation of the accumulated data, M. T. Kelley programmed a PDP-8 computer to read the teletype paper tape output and compute the particle mean and median volume and the equivalent spherical particle mean and median surface area and diameter. In addition, the program contains an option to plot the differential or cumulative percent distribution curve for the volume, and the equivalent spherical surface area or diameter. The particle distribution curve may be plotted on a count or percent weight basis.

The particle analyzer is calibrated by means of classified spheres of known diameter or nearly monosized particles supplied by mother nature, such as pollens or spores. Aperture tube orifice diameters of 30, 50, and 100 μ have been used to cover the approximate particle diameters of 1 to 50 μ. Using an aperture diameter of 30 μ, we were able to resolve particles with a diameter equal to 0.8 μ. The resolution of the analyzer is limited by the electronic noise.

Among the sample materials examined for size distribution are: Robinson coke, flake graphite, Plaskon plastic beads, anion and cation ion exchange resins, and boron and molybdenum metal powders.

Determination of tritium in NaK. We assisted the Reactor Chemistry Division in the removal and subsequent analyses for tritium in some 50 g of NaK used as a heat-exchanger medium in a fuel rod assembly. The NaK was contained between the outer shell of the lengthy assembly and inner container in which the fuel was located. The presence of tritium would be a result of diffusion of tritium through container walls or rupture of the inner container wall.

Due to the nature of the assembly, the transfer of NaK had to be made within a hot cell. The radioactivity after transfer of the NaK was sufficiently low to allow transfer of the sample to an inert atmosphere glove box. The NaK was divided into smaller portions and the procedure for the determination of hydrogen in NaK was applied.[10] The tritium was converted and determined radiometrically.

---

7. D. J. Fisher et al., "Analytical Instrumentation," *Anal. Chem. Div. Ann. Progr. Rep. Sept. 30, 1970,* ORNL-4363, p. 37.

8. N. A. Narasimkom, et al., "Analysis of Platinum and Platinum Rhodium Alloys," Atomic Energy Establishment Trombay, A.E.E.T-207, 1965.

9. L. T. Corbin et al., "Methods Development and Evaluation Laboratory," *Anal. Chem. Div. Ann. Progr. Rep. Sept. 30, 1970,* ORNL-4363, p. 41.

10. G. Goldberg, "Determination of Hydrogen in Alkali Metals by Amalgamation and Vacuum Extraction," *Anal. Chem. Div. Ann. Progr. Rep. Nov. 15, 1964,* ORNL-3750, p. 26.

Thermogravimetric analysis. The thermogravimetric method was used to study the oxidation-reduction behavior of irradiated $(U\text{-}Pu)O_2$ pellets obtained from Numec and WADCO. The purpose of the study was to determine if an oxidation-reduction cycling of the irradiated pellets would reduce the size of the oxide particles and result in an increase in the rate of fission gas release.

Twenty-six of these pellets were analyzed on the thermobalance and then inspected by means of a scanning electron microscope for phase distribution and particle size. The oxidation rate and particle size was observed to be critically dependent upon the plutonium content of the mixed oxide pellets.

The TGA method was also used to determine the residual moisture and oxalate in Am-Cm oxide pellets prepared at the TRU facility. This material was prepared from an oxalate precipitation and calcined to the oxide. The pellets were to be irradiated at the Savannah River Laboratory as part of the program to produce heavier transuranium elements.

7. Mass Spectrometry

A. E. Cameron, Assistant Director

W. H. Christie
H. S. McKown
W. T. Rainey
D. H. Smith
R. L. Walker
J. R. Walton

A detailed description of the high-resolution mass spectrometer has been prepared and accepted for publication.[1] By decreasing the ion source slit widths to 0.00025 in. and by improved focusing conditions, we have increased the resolution of the instrument to 30,000 (m/e = 505, 10% valley definition).

Several of the compounds generated by the Body Fluids Analysis Program have been analyzed in this instrument and their molecular weights (±0.010 mass units) determined, along with possible empirical formulas.

Data are currently taken with a recording oscillograph, and peaks of interest are hand measured with a ruler and straightedge. This manual technique will be eliminated in the near future when this machine is wired directly to the IBM 1130 computer. An increase of an order of magnitude in measured mass accuracy is expected when this approach is complete.

A large share of the processing programs for high-resolution mass spectrometry have already been written and are currently being used. These programs are primarily concerned with the determination of an empirical formula for a given measured mass assuming that various elements are present. Provision is made for the computer to attempt determination of a consistent set of compositions for a series of measured masses that are involved in a particular fragmentation path.

The investigation of the mechanism of surface ionization was continued by studying the desorption behavior of the actinides on hot tungsten and rhenium surfaces. The mean residence times and desorption energies of Th^+, Np^+, and Pu^+ on rhenium were determined and reported.[2] The desorption energies were found to be: Th^+, 6.69 ± 0.10 eV; Np^+, 5.61 ± 0.12 eV; Pu^+, 4.77 ± 0.11 eV. The desorption parameters of neutral U and Th from Re and neutral Th from W were evaluated.[3] The desorption energies from rhenium were found to be: U^0, 5.84 ± 0.08; Th^0, 4.4 ± 0.3. The desorption energy of Th^0 from W was found to be 4.5 ± 0.3 eV.

Together, with information published previously,[4] these data lead to the conclusion that no long-lived ionic surface states exist for the systems studied.

This project will be continued by studying the effect of contaminants (e.g., benzene and oxygen) on the surfaces.

The mass spectrometers and electronic equipment of the development laboratory have been described and published as an ORNL report.[5]

An instrument has been constructed and is being put into operation which connects the low-resolution organic mass spectrometer to the 1130 computer through the interface described in last year's report.[4] The computer is thus able to measure alternately the collector ion current and the flux intensity of the analyzer magnet. The data can be digitized and recorded at rates up to 10,000 points per second. A companion computer program has been written to process the data. While the mass spectrometer is being swept through a standard perfluoro kerosene spectrum, the computer compares every ion current measurement against a threshold value. Those values which exceed the threshold are stored in an array along with the companion flux measurement. At the end of the sweep the program defines 23 specified peaks between mass

1. W. H. Christie, D. H. Smith, H. S. McKown, and G. R. Hertel, "A New Mass Spectrometer with Partial Second-Order Double Focusing," *Int. J. Mass Specty. Ion Phys.*, in press.
2. D. H. Smith, "Mass Spectrometric Investigation of Surface Ionization. VIII. Desorption of Th^+, Np^+, and Pu^+ from Rhenium Surfaces," *J. Chem. Phys.* **54**, 4137 (1971).
3. D. H. Smith, "Mass Spectrometric Investigation of Surface Ionization. IX. Desorption of Uranium and Thorium Neutrals from Rhenium. Desorption of Thorium Neutrals from Tungsten," *J. Chem. Phys.* **55**, 1482 (1971).
4. A. E. Cameron et al., "Mass Spectrometry," *Anal. Chem. Div. Annu. Progr. Rep. Sept. 30, 1970*, ORNL-4636, p. 43.
5. A. E. Cameron, W. H. Christie, H. S. McKown, W. T. Rainey, and D. H. Smith, "Analytical Mass Spectrometry at Oak Ridge National Laboratory," ORNL-4643.

50 and 506 and generates a 3rd-order equation correlating mass with fluxmeter reading. In the future we plan to use this equipment and equation to identify masses from unknown samples.

The Body Fluids Analysis Program continues to furnish a large proportion of the samples analyzed on the single-stage instrument. Additional spectra of known compounds have been added to the organic spectrum library as well as those of unknowns, when reasonably clean spectra were obtained. If possible, trimethylsilyl derivatives of knowns and unknowns have been analyzed using the GCMS combination, and the spectra stored in the library. In many cases, unknown compound identification has been made much easier through use of the GCMS, since spectra of pure components were obtained, and molecular-weight determinations were more definite.

Assistance has been given in the identification of GC peaks in the studies on the composition of cigarette smoke condensate. In many cases the mass spectra obtained from GC peaks were used to confirm identifications which had been based on chromatographic data alone.

An interesting series of samples was submitted by Snyder and Kasama (ORAU) who were studying the composition of lipids secreted by the harderian glands of rabbits. These compounds were proved to occur as triacylglycerols and, therefore, were thought to be acylated hydroxyalkyl glycerols. The lipids were isolated, saponified, and converted to isopropylidene and TMS derivatives. The mass spectra were compared with those of derivatives of a known sample of a mixture of 9- and 10-hydroxyoctadecyl glycerol. By inference, the new class of lipids has been identified as a mixture of acylated 11- and 12-hydroxyoctadecyl glycerol.

Approximately 800 samples have been handled during the past year. The instrumentation has been very reliable with only infrequent downtime for filament replacement or changes in inlet systems.

8. Electron and X-Ray Physics Methods

L. D. Hulett, Group Leader

T. E. Willmarth[1] H. W. Dunn T. G. Harmon

Photoelectron spectroscopy. Photoelectron spectroscopy, often called ESCA (Electron Spectroscopy for Chemical Analysis), can be used to study all elements of atomic numbers higher than 20. Quantitative as well as qualitative analysis can be done. The application of this technique to problems of practical interest has been continued as an active part of our program. The iron-free magnetic spectrometer built by the ORNL Chemistry Division has been adapted for use.

The technique involves the irradiation of specimens with soft x rays (usually AlK_α or MgK_α) which cause the ejection of electrons from atomic core levels. The energy of the ejected electrons is equal to the energy of the x-ray photons that are bombarding the specimen minus the binding energy of the atomic level from which the electron was ejected. Since binding energies of inner atomic levels are generally unique, the spectrum of ejected electrons consists of a series of well-isolated peaks with very few cases of overlap. Atoms of high oxidation states, because of their more positive charge, have higher binding energies than atoms in more reduced states. Spectra taken of compounds of the same element in different oxidation states show measurable differences in the energies of peaks for that element. If an element is present in a specimen in two or more oxidation states, its peak will be split or broadened.

Electrons generated in specimens by soft x-ray irradiation have low kinetic energies, less than 1487 eV, when AlK_α is used. The depth within the specimen from which they can escape is less than 0.01 μ. Thus the method is a means of analyzing the surface of the specimen, exclusive of the bulk. Two problems were studied in the last year in which surface analysis was the primary goal: (1) the study of sulfur compounds adsorbed on fly ash, soot particles, and other solids and (2) the determination of the composition of corrosion-resistant oxide coatings on copper-nickel alloys.

1. Retired May 31, 1971.

Pollution from smoke and fly ash is of great concern, and new methods of monitoring and abatement are needed. We decided to study the use of ESCA for determining sulfur species adsorbed on fly ash and smoke particles. On fly ash samples collected from a steam plant precipitator the sulfate form predominated. On soot particles collected from a home fireplace sulfide, sulfite, and sulfate in approximately equal proportions were found. The intensities of the sulfur peaks were remarkably strong, considering that the total sulfur content (combustion analysis) was about 0.1% for both specimens. This suggests that the sulfur was concentrated almost entirely at the specimen surfaces. We believe that this type of information is important for a thorough assessment of pollution hazards from particulate matter. Particles having aggressive compounds on their surfaces should be more deleterious to the environment than clean particles. We have also done preliminary work on the catalytic effects of metal oxides in the conversion of SO_2 to SO_3. We found that SO_2 adsorbed on transition metal oxides had been entirely converted to SO_3, while on alkaline earth oxides the conversion was only partial. ESCA appears to be a useful tool for studying SO_2 abatement process involving adsorption on solids.

At ORNL, research on corrosion-resistant alloys for use in water desalination is being conducted. Copper-nickel alloys (70% Cu, 30% Ni) have been found to be corrosion resistant. There is a controversy over whether the protective oxide film is copper oxide, nickel oxide, or a mixture of both. Photoelectron spectra show very strong nickel peaks and very weak copper peaks. Thus the protective film is primarily nickel oxide even though the metal substrate is primarily copper. There is indication that we can also use chemical shifts to determine what oxidation states of nickel are in the film. Many workers have postulated odd oxidation states such as Ni^{3+}. However, we are not ready to make these interpretations as yet.

Scanning electron microscopy. The Analytical Chemistry Division has purchased a scanning electron microscope (Advanced Metals Research 900-B) which is now

being used as both a routine service instrument and as a special tool for extended research projects. This type of instrument has been shown to be of value to almost every field of science and technology. The direct examination of solid surfaces at effective magnifications greater than 1000X is a universal need; scanning electron microscopy is usually the only technique by which it can be done.

The principle of the scanning electron microscope is more easily understood than that of the traditional transmission microscope, although the latter was the first to be developed. A beam of electrons is focused to a spot less than 0.01 μ in diameter and moved in a rectangular scan across the surface of the object being examined. The scan of a cathode ray tube is synchronized with the scan on the object surface. The brightness of the spot on the cathode ray tube is modulated according to the intensity of secondary electrons emitted from the object. Thus the image of the specimen is generated on the cathode ray tube in a point-by-point fashion.

Development of the scanning electron microscope was first begun in the 1930's, but significant improvements in resolving power over that of the optical microscope were not achieved until about 1960. This breakthrough was due to the use of secondary electrons for image generation. The average energy of the secondary electrons is less than 50 eV, while that of the primary beam is usually about 20 keV. Because of their low energy, the secondary electrons are emitted from an area only slightly larger than that of the cross section of the primary beam striking the surface. Elastically scattered electrons, which are of the same energy as those in the primary beam, are able to travel from much larger depths in the specimen and emerge from an area that is large compared to the cross section of the primary beam. Using secondary electrons to generate the image, one can resolve details as small as 0.01 to 0.02 μ.

The transmission electron microscope has considerably higher resolution than the scanning microscope, but it is not as practical an instrument because it is restricted to specimens less than 0.02 μ in thickness. Thick specimens must be studied indirectly by replicating their surfaces with thin carbon films; this is very tedious and often impossible to do. The scanning microscope can be used to examine any solid specimen directly. In the past year we have studied varied types of specimens such as metal fracture surfaces, ceramics, soils, biological smears, insects, and oxide coatings.

A nondispersive x-ray fluorescence analyzer system is often used in conjunction with the imaging capabilities of the SEM to study mixtures. For example, the Reactor Chemistry Division is studying mixtures of protactinium and thorium oxides. It is desired to know whether the two oxides exist as solid solutions or as separate phases. We can provide useful information for this question by analyzing individual crystallites of the mixture and determining whether they are pure PaO_2 or ThO_2, or whether they contain both thorium and protactinium. The solid is dispersed on a piece of Scotch tape and placed in the microscope. Individual crystallites are imaged and photographed; the electron beam is then focused on them, excluding other particles, and the fluorescence spectrum is taken. Our results indicate that the crystallites are usually solid solutions containing both PaO_2 and ThO_2.

The x-ray fluorescence analyzer system was provided by ORTEC. The detector is lithium-drifted silicon. Resolution is 170 eV at 6 keV. Data handling is done by a Nuclear Data Computer system. By pushbutton operation we acquire and store data, isolate and study individual peaks on the oscilloscope, print out or plot the spectrum, calculate the area under peaks, and integrate or differentiate portions of the spectra. Other special operations can be requested through the teletypewriter.

Transmission images of thin specimens such as biological sections can also be done. The advantages of using the SEM for transmission work instead of the conventional microscope is that much thicker specimens can be studied and higher contrast can be achieved. Images are generated in a point-by-point mode, the same as for images of the surfaces of thick specimens. The transmitted signal is amplified before it is displayed on the oscilloscope. Thus there is a built-in image intensifier which allows for the examination of thick specimens for which transmission is weak. Contrast in the image can be varied by changing the gain of the amplifiers.

For performing dynamic experiments such as metal deformation and fracture, there is inside the microscope chamber a television monitor. In normal operation, photographs are taken at a slow scan rate, about one frame per 60 sec, of stationary objects. This mode allows the highest resolution. For moving objects it is necessary to scan much faster.

The image is displayed on an auxiliary television monitor. A resolution of 0.01 to 0.02 μ can be obtained in the slow scan mode. In the rapid scan mode, 0.1 μ can be obtained.

X-ray methods. X-ray diffraction, as a means of compound identification and crystal structure study continues to be a major part of our routine service. Both pure compounds and mixtures are treated. Quanti-

tative analysis of mixtures can be done by measuring diffraction line intensities. In the 1970 annual report the use of x-ray diffraction to measure lattice parameter changes caused by varying composition in uranium and thorium oxide solid solutions was discussed. This work is being continued for protactinium and thorium oxide solid solutions.

To handle radioactive samples such as the Pa-Th oxides a Debye-Scherrer diffraction camera has been modified to provide triple containment. Specimens are packed in capillaries using glove boxes located in radiation containment zones. The capillary is placed in a special mount and a gelatin capsule is cemented around it. The capillary and capsule are placed in a third container, a beryllium cup, and mounted in the diffraction camera. The entire apparatus is transported to-and-from the diffractometer located outside the radiation zone. By the above procedure we can provide service for both hot and cold samples without the expense of locating additional equipment inside the radiation zone.

The measurement of crystallite sizes of aqueous urania sols by observing the breadth of x-ray diffraction lines has been continued in this year's work. We have designed and tested a triple-containment device so that we can also apply this technique to radioactive specimens. The device uses a flat cell with plastic windows. The cell is filled with the sol in a radiation zone and sealed with plastic tape. The cell is placed inside a metal containment cylinder having a plastic window to allow x-ray transmission. Diffraction measurements are made with the containment cylinder in place. For transport to the diffractometer, a third, all-metal containment cylinder is applied. The entire assembly is only $2\frac{1}{4} \times 3$ in. in dimension. Thus transportation from radiation containment zones and in and out of glove boxes is very easy. In addition to the handling of radioactive specimens, this device can also be used for air-sensitive and light-sensitive specimens.

X-ray fluorescence, using high-energy x rays for excitation, is often quite useful for nondestructive analysis of specimens such as metal alloys. For example, a "mulberry" rod (Zr, Nb, U alloy) was studied for which it was suspected that the casting process caused a variation from one end of the rod to the other in the niobium concentration. X-ray fluorescence measurements showed a difference of about 13%. Another application was to a study by the Metals and Ceramics Division of hafnium transfer in a reactor loop containing molten lithium. It was found that specimens containing hafnium lost weight when they were placed in the high-temperature regions of the loop and that those in the lower-temperature regions gained weight. Variations in the intensities of x-ray fluorescence from hafnium paralleled the weight changes of the specimens placed in different parts of the loop. Thus it was established that the metal being transferred was definitely hafnium.

PART B. SERVICE ANALYSES

The table below gives a summary of the service analyses made by the laboratories of the Analytical Chemistry Division.

Summary of Analytical Work

Group making analyses	Average number in group		Number of results reported																			
			For ORNL divisions															For others				
	Scientists	Technicians	Analytical Chemistry	Biology	Chemical Technology	Chemistry	Ecology	Health	Health Physics	Isotopes	Metals and Ceramics	Neutron Physics	Operations	Physics	Reactor	Reactor Chemistry	Solid State	AEC	Los Alamos Scientific Laboratory	Miscellaneous	Y-12	Total
Mass Spectrometry Service Laboratory	1.2	3	1118		2,110	117			30	6,788	1,240		75	10	150	649	10		337	4513	682	17,829
Process Analyses																						
General Analyses Laboratory	9	15	147	216	46,956	703	11,035		153	1,385	4,058	207	557	38	451	3,465	228			417	732	70,748
General Hot-Analyses Laboratory	6	3	59		4,154				9	114	830		1,627		17	693				66		7,569
High-Level Alpha Radiation Laboratory	10	7	2		18,014	10		21	22	336	435		2,213			27			69	16		21,165
Radioisotopes-Radiochemistry Laboratory	6	7			7,180	35	87		831	3,835	376	27	5,636	1216	312	2,756	46	112		133		23,582
Spectrochemistry and Spark-Source Mass Spectrometry Laboratory	3	3	184	12	5,750	439		14,910	101	14,290	8,367	446	462	533	1630	3,421	1696			338	2667	55,246
Total	39.2	38	1510	228	84,164	1304	11,122	14,931	1146	26,748	15,306	680	10,570	1797	2560	11,011	1980	112	406	5483	4081	195,139

9. Spectrometry Services

A. E. Cameron

J. A. Carter J. R. Sites
R. E. Eby S. A. MacIntyre

The mode of ionization of the spark-source mass spectrometer and the high sensitivity available have been employed for the analysis of environmental samples. Quantitative results are readily obtained using the well-established isotope dilution techniques for some of the more hazardous elements such as Hg, Pb, and Cd.

In order to run mercury rapidly in water samples by the isotope dilution technique, a probe-type sample changer was adapted to the source of the MS-7 spark-source mass spectrometer. A schematic diagram and photograph of the probe are shown in Figs. 9.1 and 9.2 respectively. Details of the mercury procedure were published during this year.[1] A typical time pattern for running mercury is 2 min for making the exposure, 1 min to change to the next sample, and about 1 min to pump the probe volume to a level so the next sample can be sparked. This rapid sequence of events represents a time savings of about one-half hour per sample.

For the ORNL-NSF Environmental Program, and with the cooperation of the Industrial Hygiene Department, a double-spiking technique has been worked out for lead and cadmium. An extraction method employing dithizone has been used to isolate these isotopically altered elements from such things as water, fish, fresh vegetables, fly ash, and silts.

Other elements that have been quantitatively determined by isotope dilution techniques with the spark-source mass spectrometer include Gd, Pt, W, Hf, Zr, and Dy; these are alloying metals in special alloys prepared by the Metals and Ceramics Division. These elements are determined without any prior chemical separation. In connection with the analysis of platinum and tungsten, a special technique was devised for the

1. J. A. Carter and J. R. Sites, "Determining PPB Mercury Concentrations Using a Spark-Source Mass Spectrometer Sample Changer," *Anal. Letters* 4(6), 351–55 (1971).

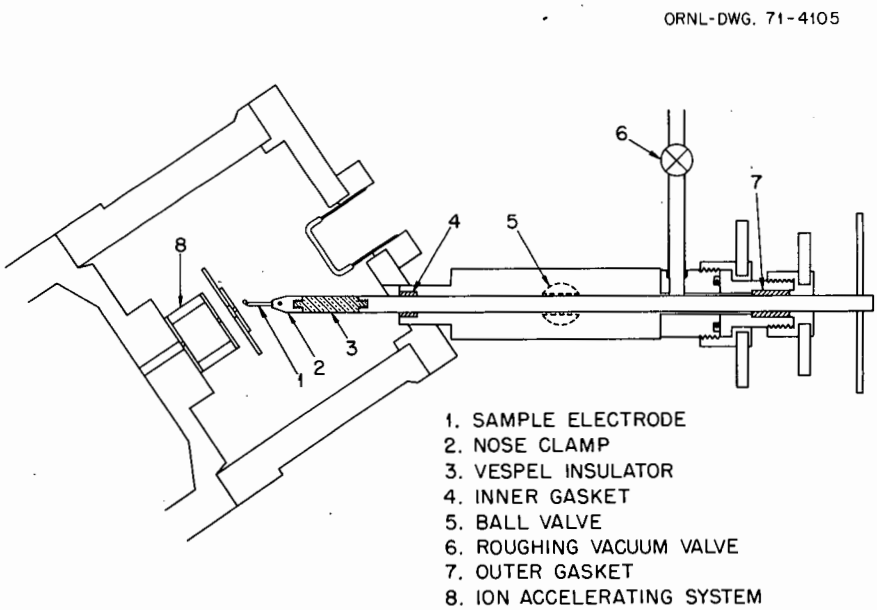

Fig. 9.1. Cross section of the spark-source mass spectrometer sample changer.

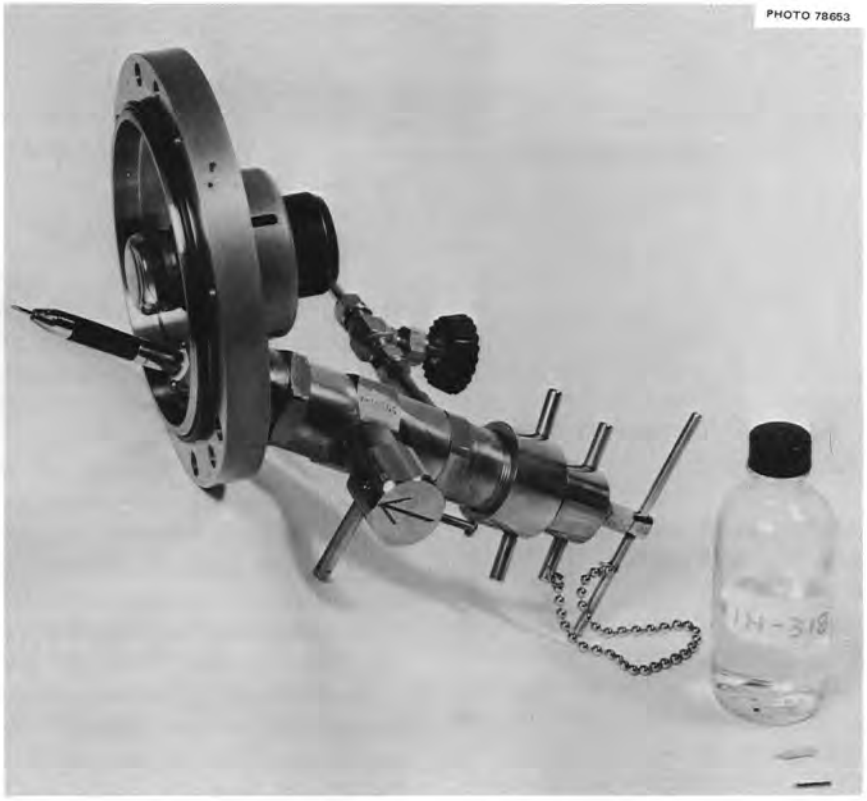

Fig. 9.2. Probe sample changer with mercury electrodes.

dissolution of platinum-rhodium tungsten alloys. Alloys of this type were dissolved in 12 *M* HCl employing ac electrolysis. The rate of dissolution was about 50 mg/hr at a current density of one amp/cm^2.

A series of fly-ash samples obtained from a TVA steam plant and classified according to particle size ($<1-5$ μ to 725 μ) was analyzed for the Environmental Protection Agency (EPA). Both spark-source mass spectrographic and emission spectrochemical techniques were used for the analysis. Typical concentration ranges for some of the more toxic inorganic pollutants in weight parts per million follow: As, 50 to 200; Be, 1 to 2; Cd, <5 to 100; Cr, 130 to 300; and Pb, 300 to 500. The concentration of Cd was significantly higher in the particles having a diameter <1.5 μ. Additional work for EPA is anticipated.

Also, the beryllium concentration in fly ash collected on glass filters was determined and reported to TVA personnel. The use of glass filters for collection of samples for trace analysis is not recommended because of the high concentration of trace elements in glass itself.

Reported results from the combined emission spectrochemistry and spark-source mass spectrometry laboratories were in excess of 55,000 on some 3100 samples. The Industrial Hygiene Department of the Health Division was one of the larger suppliers of samples. Samples for Hg, Cd, and Pb were much more numerous than in past years. The total number of results reported to the Isotopes Division increased about 2% over last year. Procedures developed for analyzing impurities in $^{233}UO_2$ by spark-source mass spectrometry were approved by Bettis Atomic Power Laboratory (BAPL). As a result of the work in the Chemical Technology Division in connection with the ^{233}U project, the number of samples analyzed by spark-source mass spectrometry in Building 2026 increased almost a factor of 2. Elemental impurity specification analyses for TRU reprocessed CmO_2 were carried out employing enriched tipped CmO_2-Ag electrodes as samples in the MS-702 spark source.

A very dilute solution containing ^{60}Co was studied by the spark-source mass spectrometer and the ^{60}Co isotopic abundance was found to be 96%. Other

radioactive materials in microgram quantities were also subjected to mass analysis for trace characterization; these include the following: ^{14}C, ^{33}P, ^{36}Cl, ^{43}Ca, ^{59}Ni, ^{67}Ga, ^{231}Pa, ^{241}Am, ^{243}Am, ^{244}Cm, ^{249}Bk, and ^{249}Cf.

For the Metals and Ceramics Division, graphite surfaces from the MSRE core were analyzed. A number of fission products were detected. In addition to the analysis, some qualitative assessment of the penetrating depth could be calculated from the beam monitor and the transmission factor of the mass spectrometer. Leach solutions from INOR-8 surfaces in the MSRE were checked for fission products such as Tc, Rh, Sb, Te, Zr, and others.

Effective July 1, 1970, the Mass Spectrometry Service Laboratory and the Transuranium Mass Spectrometry Laboratory were combined into one laboratory, with the reduction of one supervisor.

The Transuranium Laboratory reported 5110 results, an increase of 6% over the previous year. The Chemical Technology Division continues to be the biggest customer, accounting for about 39% of the analyses. The Laboratory did considerable work for other plants, including uranium and plutonium isotopic analyses for Los Alamos Scientific Laboratory, uranium isotopic analyses for New Brunswick Laboratory and Idaho Nuclear Corporation, and americium analyses for the Karlsruhe, West Germany, nuclear laboratory. We also continued our participation in the "Safeguard" Program, analyzing uranium and plutonium samples from European reactors.

At the request of the Metals and Ceramics and Chemical Technology Divisions, we started making quantitative analyses for ^{148}Nd, to be used in burnup calculations. Since it was also desirable to obtain uranium and plutonium concentrations on the same samples, we made a triple-spike solution containing about 200 ng of ^{150}Nd, 9 μg of ^{233}U, and 700 ng of ^{242}Pu per gram of solution. These quantities were calibrated using other standards of known concentrations. About 50 mg of this solution is accurately weighed and added to 100 μl of diluted sample solution. Neodymium, uranium, and plutonium isotopic analyses are then made on the spiked and unspiked samples. Due to the extreme sensitivity of the two-stage mass spectrometer, very small samples can be used so that no separation of the radioactive fission products is necessary. Samples containing less than 1 ng of ^{148}Nd/ml have been analyzed, and the uranium and plutonium concentrations were determined on the same filament loadings.

The Mass Spectrometry Service Laboratory continues to analyze the separated stable isotopes for the Isotopes Division, and to analyze gas samples for various groups in the plant, including certification of argon, helium, and nitrogen gas cylinders for the ORNL and the Y-12 Plant. The number of cylinders certified dropped from about 600 to 400 for the past year. This accounted for over half of the 700 samples run in the gas laboratory. Overall, there was a drop of 20% in the number of analyses performed by the Service Laboratory, but this was accomplished with a 33% reduction in personnel.

The manifold on the gas mass spectrometer was revised so that smaller samples can now be analyzed. Small samples can now be introduced directly into the spectrometer without going through the large expansion volume. Sensitivity has thus been increased by a factor of about 30. Samples smaller than 0.01 cm^3 can now be run.

10. Process Analyses

L. T. Corbin

HIGH-LEVEL ALPHA RADIATION LABORATORY

J. H. Cooper H. C. Meyer

The High-Level Alpha Radiation Laboratory reported over 21,000 results last year, a slight increase over the previous year. Approximately 85% of these were for the Chemical Technology Division.

An inert atmosphere dry box was installed in the laboratory in Building 3508. This allows us to handle samples that are easily oxidized or are altered by moisture. Samples can be weighed and portioned out for further analysis.

More precise readout of the voltage in coulometric analyses is now attainable because of replacement of the old potentiometers with "five-place" digital readout voltmeters.

The characterization of plutonium fuels has required additional analytical procedures in our laboratory. A density gradient column has been set up for the density measurements on plutonium bearing fuel kernels and of the silicon carbide coating. We are also capable of determining the pyrolytic carbon content on these samples.

Previously we dissolved dense mixed oxide fuel particles by fusion. However, the introduction of trace impurities precluded the subsequent determinations of some of the impurities in the samples. Now, dissolutions are made in aqua regia (with a trace of F^-) and no significant amounts of extraneous impurities are introduced. A blank of reagents is also analyzed with the samples.

In the Transuranium Laboratory an improvement in the determination of ^{243}Am has been made. A sample aliquot is spiked with a known amount of ^{241}Am and this mixture is decontaminated from fission products and rare earths by a "Tramex" type solvent extraction. Mass spectrometric analysis is then used to determine the ^{243}Am in the original sample.

Sulfur is now being determined in curium oxide. The sample is dissolved in aqua regia. Sulfur is reduced to sulfide and distilled as H_2S. The sulfur content is then determined spectrophotometrically as the colored complex of *p*-phenylenediamine.

GENERAL ANALYSES LABORATORY

W. R. Laing

The greatest change in sample load this year was a fivefold increase in analyses for the Ecological Sciences Division. Over 11,000 determinations were made on clam shells, leaves, twigs, soil, and water. Atomic adsorption methods were used to measure Na, K, Ca, Mg, and Mn, and flame emission was used for Sr, Ba, and Ca.

Boron carbides were analyzed to verify methods being prepared for FFTF absorber pellet analysis. Determinations included B, C, soluble boron, soluble carbon, Cl, F, O, and spectrographic analysis.

In other boron work, samples of BN and boron powder were analyzed for B, N, C, O, and H_2O. Some plaster of paris–boron glass mixtures were checked for homogeneity by separation of the plaster from the glass using an ultrasonic cleaner. The glass was dried and weighed. Pyridine solutions of BF_3 were analyzed by complexing the BF_3 with NaF, removing the pyridine by evaporation, precipitating the fluoride with $CaCl_2$ and titrating the boron.

Hydroxide bands were identified in $NaBF_4$ by infrared absorption. Standards prepared by mixing $NaBF_3OH$ with $NaBF_4$ were used to prepare calibration curves. Pellets from one hundred salt samples have been scanned for this peak. Shifts in wave number have been observed in deuterated samples that correspond to the formation of –OD.

The Metals and Ceramics Division prepared reactor fuel sticks by injecting a mixture of pitch and graphite into a bed of microspheres. These sticks were analyzed for graphite and microspheres by dissolving the pitch in pyridine, collecting the microspheres on a screen, and filtering the graphite on a sintered glass frit.

In other work, nitrate was determined in urania sols containing hydrazine by precipitation with nitron. Microgram amounts of thorium were separated from rare earths and bismuth by TOPO extraction. The thorium was stripped from the organic phase and measured using Arsenazo III. Samples of I_2O_5 and HI_3O_8 were analyzed for iodine and iodine valence by

reduction with $NaAsO_2$ and titration with $AgNO_3$. Programs were written for the PDP-8 computer to make a least-squares curve fit for the calibration data from the density gradient columns and to calculate the sample particle densities.

GENERAL HOT-ANALYSES LABORATORY

C. E. Lamb

The majority of the samples analyzed in the General Hot-Analyses Laboratory were in support of programs related to the HTGR, GCFBR, LMFBR, LWBR, and Liquid and Gaseous Waste Disposal. Determinations were also made in support of the Fission Product Behavior Study, Isotope Production, Thorium Utilization Program, and ^{233}Uranium Dispensing Facility.

Radioactive samples of Ta-W-Hf alloys were received from the NASA-Lewis Research Center for nitrogen determination. They were dissolved and treated in a hot cell using a modified Kjeldahl distillation unit. This distillate was removed to a laboratory for spectrophotometric measurement.

A Bell and Howell CEC moisture analyzer was modified by attaching a sample loading device (designed by R. A. Bradley, Metals and Ceramics Division) to allow the entry of the sample into the furnace section without introducing air. The technique used was to insert the platinum boat containing the sample into the entry port. The device was then closed, evacuated, and flushed with dry nitrogen. The flushing cycle was repeated twice and the sample was then moved into the furnace section. The low blank obtained by this technique was comparable to the blank found by using an argon-filled plastic glove bag as an entry port.

Two plutonium standards made from NBS certified plutonium sulfate and plutonium metal were repeatedly analyzed for plutonium using the new ORNL Q-4010 coulometric titrator. The relative standard deviations were determined to be 0.09 and 0.04% respectively. Based upon the calibration of the coulometric titrator, a negative bias of ~0.09% was indicated for this method.

Two series of sludge samples from ORNL waste storage tanks were treated and analyzed in the hot cell. Portions of the samples were measured for moisture content and weight loss on ignition. They were then dried, dissolved, and analyzed for carbonate, sulfate, nitrate, uranium, plutonium, thorium, gas release, trace ionic impurities, and major radiochemical constituents.

In preparation for the chemical analysis of samples resulting from the Chemical Technology Division's participation in the LWBR program, methods and procedures were proposed and reviewed, standards and synthetic solutions were prepared, and additional equipment was obtained.

A Fisher Sub-Sieve Sizer was received, assembled, and calibrated using a standard Fisher Orifice. We have begun to train the personnel to use it.

A decrease in the number of radioactive samples received in the HRLAL allowed time for the removal of obsolete equipment and service lines from cells 4, 5, and 6. The cells were cleaned and the background radioactivity was reduced.

A turbidity developed in the zinc bromide solution in the windows of cells 4 and 6 causing a serious loss of visibility. The solution was drained from each window and the window cleaned with water and alcohol using a pressure washer. Additional hydroxylamine hydrochloride was added to the zinc bromide solution which was then filtered, and returned, under argon, into each window. This treatment restored the clarity and resulted in improved visibility through the cell window.

The installation of the iodine adsorber system on the building air exhaust was completed and tested. The efficiency of each of the three filter banks exceeded 99.96% with elemental iodine. A set of 11 samples, each containing ~100 mCi ^{131}I, was dissolved a few days after the test with a release of less than 1 mCi.

The radiochemical liquid waste drain header from the hot cells became plugged; the restriction was only partially cleared by chemical treatment. The use of a hydraulic ram was unsuccessful. The blockage was finally removed by manually rodding the line with a 175-ft sewer tape. Disposal of the highly contaminated tape was a problem; however, by cutting off only small sections of the tape at a time as it was withdrawn and monitored, personnel radiation exposures were controlled at a safe level.

RADIOISOTOPES-RADIOCHEMICAL LABORATORIES

E. I. Wyatt

The various types of analyses performed in the Radioisotopes-Radiochemistry Laboratories have remained about the same as last year. The overall work load decreased by about one-third due to decrease in funding for the research groups supplying these samples.

Environmental-type samples remained steady with some slight increase in requests for tritium determinations. Requests for tritium were markedly increased for samples of nuclear fuel and components in contact with fissioning fuels such as metals and graphite. During

dissolution these samples require some means of trapping tritium as HTO. Determinations are made in liquid scintillation counters.

The mercury content of 12 samples of silt taken from the bottom of the Clinch and Tennessee Rivers was determined by neutron activation analysis with subsequent radiochemical separations. An attempt is underway at present to determine mercury in paper mill effluents using a variety of cleanup techniques combined with a nondestructive determination by activation in the pneumatic tube of the High-Flux Isotope Reactor.

Thirty-seven samples of river silt were examined for radioactive species by gamma-ray spectrometry. A large well-type NaI detector was used. Quantitative values for radium and thorium were reported for the first time in these samples, which are taken periodically from the Clinch and Tennessee rivers by the Health Physics Division. Alloys of U-Np are received occasionally from the Y-12 plant to determine the percent of neptunium in fully enriched uranium. We have shown that it is practical to do this by integrating the 0.31-MeV photopeak from the ^{233}Pa daughter of ^{237}Np. This is accomplished by use of a Ge(Li) detector with high resolution capabilities.

Several batches of ^{233}U were cleaned up by the ion exchange process in the Chemical Technology Pilot Plant to eliminate the ^{232}U daughter activities. Our job was to examine all samples to determine the concentration of ^{204}Tl which serves as a monitor for other radioisotopes and thus makes it possible to determine their position on the two ion exchange columns. Each sample had to be examined several times to determine the decay or growth of the 2.6-MeV gamma associated with ^{208}Tl, a descendant of ^{212}Pb.

Half-lives of a few radionuclides have been redetermined and will be reported in a paper being prepared for publication by S.A. Reynolds along with those of other experimenters. The ones followed in our lab are listed below:

Nuclide	Half-life (our value)
^{57}Co	269.8 ± 0.4 d
^{64}Cu	12.72 ± 0.04 h
^{76}As	26.31 ± 0.08 h
^{129m}Te	34.1 ± 0.2 d
^{139}Ce	137.2 ± 0.4 d
^{141}Ce	32.45 ± 0.13 d
^{143}Ce	33.0 ± 0.2 h
^{182}Ta	115.0 ± 0.2 d
^{185}W	75.1 ± 0.3 d

Preliminary values for the half-life of others are as follows: ^{111}In = 2.88 d, ^{160}Tb = 70.0 d, ^{161}Tb = 7.0 d.

RADIATION AND SAFETY CONTROL

J. S. Wike
U. Koskela

The Analytical Chemistry Division led all divisions at ORNL again this year in total hours accumulated since the last lost-time accident. There were 21 minor accidents and one serious cut in the past year. This is an increase of six minor accidents over last year. As in the past, most incidents were the result of cuts and punctures by glass.

Several radiation work permits were issued for handling of a variety of materials. Approvals were given to do tracer work for the environmental program and for handling high concentrations of fissionable elements for experimental programs.

Two cell windows in Building 2026 required filtering of the zinc bromide. Oil in the storage cell window in Building 3019 was drained and replaced with new oil. No significant exposures to personnel occurred.

D. C. Gary held his annual safety inspection. Electrical hazards were obvious in some older buildings. All service outlets not meeting the national fire and electrical codes were updated in the division.

The new Occupational Safety and Health Act of 1970 (Public Law 91-596) was discussed in detail at a meeting of divisional safety officers. This law which became effective in April 1971 was designed to provide greater safety in industry.

A building review of the HRLAF (3019-B) was conducted by the Radioactive Operations Committee. Air handling equipment for glove boxes and working cell areas was of prime interest.

QUALITY CONTROL

G. R. Wilson

Changes in the types of samples received by the General Hot-Analyses Laboratory made necessary several changes in the control programs. The Amperometric Control programs for chromium and zirconium and the Photoneutron Control program for beryllium were dropped. Since the samples now being analyzed coulometrically by the General Hot-Analyses and the High-Level Alpha Radiation Laboratories have higher concentrations of uranium and plutonium, the 2S control limits have been decreased from 1 to 0.4%.

The overall quality level increased from 93 to 95%, and the number of control results increased slightly from 2159 to 2225.

Table 10.1. Distribution by methods of control results for July 1970–June 1971

Type of method	Constituent	Number of control programs	Number of control results
Colorimetric	Aluminum	1	11
	Chromium	1	81
	Iron	1	116
	Molybdenum	1	47
	Nickel	1	80
	Thorium	1	39
	Uranium	1	80
		7	454
Coulometric	Plutonium	2	128
	Uranium	3	1046
		5	1174
Flame photometric	Lithium	1	28
Fluorometric	Uranium	2	169
Gravimetric	Carbon	2	79
Polarographic	Uranium	1	3
Volumetric	Aluminum	1	10
	Nitrate	4	238
	Thorium	1	70
		6	318
Total		24	2225

Table 10.2. Distribution by laboratories of control tests for July 1970–June 1971

Laboratory	Number of control results		Quality level[a] (%)	
	Total	Outside fixed limits	1970	1971
General Hot-Analyses	672	14	90.0	97.9
General Analyses	1212	63	96.2	94.8
High-Level Alpha Radiation	341	32	83.8	90.6
Total	2225	109	92.7	95.1

[a]Control results within 2S limits.

In Table 10.1 the quality level for each laboratory is shown, and the results are compared with those from the previous year. Lists of the different control programs and the number of results reported for each program are given in Table 10.2.

INORGANIC PREPARATIONS

D. E. LaValle[1]

A considerable portion of the work of the past year has been concerned with the preparation and heat treatment of special alloys, those not easily handled by the usual metallurgical techniques. Examples of these for the Neutron Diffraction Group of the Solid State Division are $^{60}Ni_3Fe$, $^{60}Ni_3V$, $CeAl_2$, $CeAl_3$, and Ni_3Ga doped with Fe; for the Low Temperature Nuclear and Solid State Physics Group of the Physics Division: $^{56}Fe_{0.98}{}^{196}Pt_{0.02}$, and the Heusler alloys Ni_2MnA, where A was Sn, Sb, Ga, or In.

A few preparations of ferrites (substituted magnetites of the general type $^{7}Li_{0.5}Fe_{1.5}O_4$) were made for the Neutron Spectrometry Group of the Solid State Division, and a program of preparations of the so-called pnictides (compounds of rare earth metals with elements of the nitrogen subgroup) was initiated. So far, PrSb, TmBi, and TmN have been made.

Some unusual preparations made for the Radiation Chemistry Group of the Director's Division included the ozonides KO_3 and CsO_3 and ^{18}O-labelled nitrates of Na, Cs, Sr, Tl, and Ag. Also provided were anhydrous $Cd(NO_3)_2$ and $Zn(NO_3)_2$, and $^{6}LiBeF_4$.

Miscellaneous preparations for various groups included high-purity ThF_4, SmF_2, anhydrous $CaBr_2$, the eutectic $LiNO_3$-KNO_3, and Na_2O. The preparation of $^{235}UCl_3$ made last year was incorporated in $LaCl_3$ as a 27 mole % solid solution and sent to Brookhaven National Laboratory. Work on the salvage of various rare earth metal isotopes has lagged somewhat in deference to syntheses. At present, isotopes to be salvaged are ^{170}Er, ^{160}Gd, ^{154}Sm, ^{54}Fe, ^{56}Fe, and ^{57}Fe. The method of separating ~2 g of rare earth from ~40 g of thoria (a product of the reduction of rare earth oxide to metal) has been worked out by first extracting the bulk of the thorium with 2-thenoyltrifluoroacetone in chloroform, then precipitating the remainder with hexamine.

1. Special assignment.

PART C. ACTIVITIES RELATED TO EDUCATION

Collaboration with the academic sector has continued to be an active feature in the program of the Analytical Chemistry Division. Both the extent of our involvement and the results of our collaboration become more evident each year with the increase in the number of advanced degrees awarded through the Graduate Thesis Research Program. The staff and facilities of the Division have continued to be used for short-term training of undergraduate students as a complement to their regular academic careers.

The composition of these programs is described below.

ADVISORY COMMITTEE MEMBERS

C. V. Banks, Professor of Chemistry, Iowa State University (deceased 1971)

M. A. Evenson, Professor of Medicine, University of Wisconsin

L. B. Rogers, Professor of Chemistry, Purdue University

S. Siggia, Professor of Chemistry, University of Massachusetts

CONSULTANTS

J. A. Dean, Professor of Chemistry, University of Tennessee. Dr. Dean collaborates on a continuing basis in several of the nonnuclear programs of the Division.

Gleb Mamantov, Professor of Chemistry, University of Tennessee. Dr. Mamantov specializes in those parts of the Division's program concerning molten-salt chemistry.

A. O. C. Nier, Professor of Physics, University of Minnesota. Dr. Nier is under subcontract to work specifically with the programs that involve mass spectrometry.

GREAT LAKES COLLEGES EDUCATIONAL PROGRAM

The first session of this program that was initiated between ORNL and the Great Lakes Colleges Association in 1970 was completed December 18, 1970. Two professors and three students, who were listed in last year's Annual Report as full-time participants in the Analytical Chemistry Division, terminated their work at that time. Two participants have now arrived for the second session of this program:

John S. Hammond, from Denison University, Granville, Ohio, is working with D. L. Manning in the field of electroanalytical chemistry of molten salts.

Benjamin Fieselmann of Earlham College, Richmond, Indiana, is working with M. R. Guerin on the tobacco smoke program.

GRADUATE THESIS RESEARCH PROGRAM

D. R. Matthews. A member of the Analytical Chemistry Division and a graduate student in chemistry at the University of Tennessee, Mr. Matthews is performing his Ph.D. thesis research in the application of gas chromatography to the determination of anions in aquatic systems. This work is under the direction of W. D. Shults and J. A. Dean (University of Tennessee).

E. Ricci. A member of the Analytical Chemistry Division and the holder of a Ph.D. in Chemistry, Dr. Ricci completed his work for an M.S. degree in Physics from the University of Tennessee. His major professor was T. A. Welton (ORNL-University of Tennessee).

R. L. Coleman. A graduate student in chemistry at the University of Tennessee and the recipient of an ORAU fellowship, Mr. Coleman completed his requirements for the Ph.D. degree. His thesis research was performed on the environmental applications of the GeMSAEC analyzer under the guidance of W. D. Shults and J. A. Dean (University of Tennessee).

J. E. McCracken. A graduate student in chemistry at the University of Missouri and an ORAU Fellow, Mr. McCracken completed his requirements for the Ph.D. degree. His thesis research was performed in the field of coulometry under the guidance of W. D. Shults and J. C. Guyon (University of Missouri).

F. R. Clayton. A graduate student in chemistry at the University of Tennessee, Mr. Clayton completed his requirements for the Ph.D. degree. His thesis research involved electrochemical studies of molten salts and was performed under the guidance of D. L. Manning and G. Mamantov (University of Tennessee).

J. C. Wolford. A graduate student in chemistry at the University of Tennessee, Mr. Wolford completed his requirements for the Ph.D. degree. His thesis program in the field of ligand ion chromatography was directed by G. Goldstein and J. A. Dean (University of Tennessee).

J. D. Lodmell. A graduate student in chemistry at the University of Tennessee, Mr. Lodmell is performing his doctoral research in the development of flame photometric detectors for gas chromatography under the guidance of W. D. Shults and J. A. Dean (University of Tennessee).

J. A. Ealy. A member of the Analytical Chemistry Division, currently on leave of absence, and a graduate student in chemistry at the University of Tennessee, Mr. Ealy is pursuing his research for the M.S. degree under the guidance of W. D. Shults and J. A. Dean (University of Tennessee). His research project involves the analysis of organomercury compounds. He holds an ORAU fellowship.

D. C. Canada. Mr. Canada is on leave of absence to obtain his Ph.D. degree in biochemistry at Purdue University.

SUMMER STUDENT PROGRAM

Leslie LiDonnici, an ORAU Student Trainee from Barnard College, worked with L. D. Hulett, Electron Microscopy Group.

Rebecca Sue Porter, an ORAU Student Trainee from Lenoir Rhyne College, worked with R. W. Stelzner, Analytical Instrumentation Group.

R. K. Struckmeyer, an AEC Fellow in Radiation Science and Protection from Purdue University, worked with T. H. Handley, Nuclear and Radiochemistry Group.

PART D. EXTRALABORATORY PROFESSIONAL ACTIVITIES

Members of the Division continue to be associated with groups in their specialities as well as in the overall field of analytical chemistry on both a national and international level. These activities are described in this section:

A. E. Cameron

Titular Member:	International Commission on Atomic Weights, IUPAC

J. A. Carter

Chairman:	Analytical Chemistry Group, East Tennessee Section, ACS
Trustee:	East Tennessee Section, ACS

L. T. Corbin

Member:	Committee E-10, Radioisotopes and Radiation Effects, ASTM Subcommittee I, Burnup Subcommittee II, Core and Cladding
Vice-Chairman:	Committee C-26, Fuel, Control, and Moderator Materials for Nuclear Reactor Applications, ASTM
Chairman:	Subcommittee V, Test Methods, Committee C-26, ASTM

D. A. Costanzo

Secretary-Treasurer:	Analytical Chemistry Group, East Tennessee Section, ACS

J. S. Eldridge

Secretary:	Subcommittee on the Use of Radioactive Standards Committee on Nuclear Sciences, NAS-NRC
Co-Investigator:	NASA-sponsored project "Nuclear Chemistry of Returned Lunar Samples – Nuclide Analyses by Nondestructive Gamma Ray Spectrometry"

Cyrus Feldman

Member:	Committee E-2, Emission Spectrochemical Analysis, ASTM Subcommittee on Photographic Photometry Subcommittee on Atomic Absorption Analysis Publications Committee, Society for Applied Spectroscopy
Scientific Editor:	*Optics and Spectroscopy* (English Translation of the Russian Journal *Optika i Spektroskopiya*)

D. J. Fisher

Member:	Editorial Board, *Chemical Instrumentation* Advisory Board, Chemical Analysis Monograph Series (Wiley-Interscience)
President:	Association of Indiana Chemists

Gerald Goldberg

Member:	Committee G-1, Corrosion of Metals, ASTM Subcommittee I, Research Subcommittee VIII, Corrosion of Nuclear Materials Task Group B, Liquid Sodium Systems Alkali Metal Corrosion Task Group C, Liquid Potassium Systems Committee E-3, Chemical Analysis of Metals, ASTM Analytical Methods Subcommittee Alkali Metals Task Force Non-Ferrous Metals Division

Gerald Goldstein

Member:	Committee on Specifications and Criteria for Biochemical Compounds, NAS-NRC
Chairman:	Subcommittee on Nucleotides and Related Compounds
Member:	Committee on Specifications for Adinine for Use in Anticoagulant Solutions, NAS-NRC
Chairman:	Knoxville-Oak Ridge Chapter, American Institute of Chemists

M. R. Guerin

Member:	Panel 3, Chemistry, International Study Group on Tobacco and Health Research Tobacco Working Group, Lung Cancer Task Force, National Cancer Institute
Consultant:	Chemical Carcinogenesis Contract Review Committee, National Cancer Institute

A. D. Horton

Member:	Committee E-19, Chromatography, ASTM Subcommittee III, Research

L. D. Hulett

Treasurer:	Tennessee Institute of Chemists, American Institute of Chemists Division

M. T. Kelley

Member:	Analytical Specialists Group, Union Carbide Corporation Technology Subcommittee Advisory Board, *The Analyst* Advisory Committee, *Microchemical Journal* Board of Editorial Advisors, *Analytica Chimica Acta*

W. R. Laing

Secretary:	Committee C-26, Fuel, Control and Moderator, Materials for Nuclear Reactor Applications, ASTM Subcommittee V

W. S. Lyon

Member: Committee E-10, Radioisotopes and Radiation Effects, ASTM
Subcommittee I, Burnup
Subcommittee III, Tracer Application
Subcommittee V, Neutron Dosimetry
Collaborating Referee on Mercury Analysis by Neutron Activation Analysis for the Association of Official Analytical Chemists (AOAC)
Scientific Committee 25 on Radiation Protection in the Use of Small Neutron Generators, NCRP
Committee N43-3, Equipment for Non-Medical Radiation Applications, United States of America Standard Institute
Editorial Board: *Chemical Instrumentation*

Regional Editor: *Journal of Radioanalytical Chemistry*

Associate Editor: *Radiochemical and Radioanalytical Letters*

H. S. McKown

Treasurer: Oak Ridge Section, Instrument Society of America Southeastern Conference, Instrument Society of America, Gatlinburg, Tenn., May 1971

T. R. Mueller

Chairman Elect: Analytical Chemistry Group, East Tennessee Section, ACS

S. A. Reynolds

Member: Committee D-19, Water, ASTM
Subcommittee IV, Methods of Radiochemical Analysis
Committee E-10, Radioisotopes and Radiation Effects, ASTM
Subcommittee III, Tracer Applications
Subcommittee V, Neutron Dosimetry
Task Group on Neutron Cross Sections
Task Group on Nuclear Data and Radiation Safety
Subcommittee on Use of Radioactivity Standards, NRC
Ad Hoc Panel on National Uses and Needs for Standard Radioactive Materials, NRC
Task Group 1, Scientific Committee 18 (Standards), NCRP
Standards Committee ANS-16, Isotopes and Radiation Division, ANS

Advisor: Information Center on Nuclear Standards, ANS

E. Ricci

Member: Executive Committee, Isotopes and Radiation Division, ANS

Chairman: Subcommittee on Activation Analysis, ANS

W. D. Shults

Member and Vice-Chairman:
Environmental Quality Advisory Board, City of Oak Ridge

J. C. White

Past Chairman:	Division of Analytical Chemistry, ACS
Representative from ACS to:	
	Project N11, Basic Materials and Materials Testing for Nuclear Applications Nuclear Standards Board
	United States of America Standards Institute (sponsored by ASTM)
Member:	Editorial Board, *Analytical Letters*
	Committee on Analytical Chemistry, NAS-NRC
Titular Member:	Commission V.7, Analytical Radiochemistry and Nuclear Materials, IUPAC

PART E. PRESENTATION OF RESEARCH RESULTS

The increasing diversity of the Division's activities is reflected in the titles and the authorship of the papers presented in this section. A trend toward a "team" or multidisciplinary approach is indicative of the complexity of many of the problems which the Division has been called on to solve. Many of these presentations were made with members of other ORNL divisions or with investigators from outside ORNL. Such personnel are indicated by an asterisk. An additional indication of the scope of this work is the fact that the results have been accepted for publication in 23 different scientific journals.

PUBLICATIONS

Contributions to Books

AUTHOR(s)	TITLE	PUBLISHER
Mamantov, G., W. D. Shults (eds.)	*The Determination of Air Quality*	Plenum Publishing Co., New York, 1971
Moss, M. L., C. A. Horton, J. C. White	"Clinical Chemistry," pp. 573–604 in *Annual Review of Biochemistry*, vol. 40, ed. by E. E. Snell	Annual Reviews, Inc., Palo Alto, Calif., 1971
Ricci, E.	"Elementary Physics of Radioactivation and Radioisotopes," pp. 31–62 in *International Encyclopedia of Pharmacology and Therapeutics*, vol. 1, chap. 2, sect. 78, ed. by Y. Cohen	Pergamon, New York, 1971
Ross, H. H.	"Radiation Detection and Measurement," pp. 185–217 in *International Encyclopedia of Pharmacology and Therapeutics*, vol. I, chap. 6, sect. 78, ed. by Y. Cohen	Pergamon, New York, 1971
	"Performance Parameters of Selected Waveshifting Compounds for Cerenkov Counting," pp. 757–70 in *Organic Scintillators and Liquid Scintillation Counting*, ed. by D. Horrocks and C. J. Peng	Academic, New York, 1971

Articles

AUTHOR(s)	TITLE	PUBLISHER
Anderson, D. H.,* P. R. Bell,* J. S. Eldridge et al.	"Preliminary Examination of Lunar Samples"	*Apollo 11 Preliminary Science Report*, NASA SP-214, pp. 123–42
Anderson, D. H.,* P. R. Bell,* J. S. Eldridge et al.	"Preliminary Examination of Lunar Samples"	*Apollo 12 Preliminary Science Report*, NASA SP-235, pp. 189–216
Attrill, J. E.	(See Burtis, C. A.)	

Bate, L. C.	"Rapid Radiochemical Strontium Separation"	*Radiochem. Radioanal. Lett.* **4**, 385–90 (1971)
	"Loss of Mercury from Containers in Neutron Activation Analysis"	*Radiochem. Radioanal. Lett.* **6**, 139–44 (1971)
Bate, L. C. F. F. Dyer	"Labelling of Copper Wire with Ag-110*m* for Subsequent Identification"	*Isotop. Radiat. Technol.* **8**(3), 315–17 (1971)
Burtis, C. A.,* W. F. Johnson,* J. E. Attrill et al.	"Increased Rate of Analysis by Use of a 42-Cuvet GeMSAEC Fast Analyzer"	*Clin. Chem.* **17**, 686 (1971)
Butts, W. C.,[1] W. T. Rainey, Jr.	"Gas Chromatography and Mass Spectrometry of the Trimethylsilyl Derivatives of Inorganic Anions"	*Anal. Chem.* **43**, 538 (1971)
Butts, W. C.,[1] J. E. Mrochek, D. S. Young	"Influence of Certain Components of a Chemically Defined Diet on Urinary Excretion of Ultraviolet-Absorbing Compounds"	*Clin. Chem.* **17**, 956–57 (1971)
Butts, W. C.[1]	(See Mrochek, J. E.)	
Cameron, A. E.	(See Carter, J. A.)	
	(See Smith, D. H.)	
Carter, J. A., A. E. Cameron, J. A. Dean *	"Spark-Source Mass Spectrographic Techniques for the Analysis of Lanthanide and Actinide Elements in Microgram and Sub-Microgram Transuranium Samples"	*Anal. Lett.* **4**, 337–50 (1971)
Carter, J. A., J. R. Sites	"Determining ppb Mercury Concentrations Using Spark-Source Mass Spectrometer Sample Changer"	*Anal. Lett.* **4**, 351–55 (1971)
Caton, J. E., G. Goldstein	"Electrophoresis of Ribonucleic Acids on Polyacrylamide Gel Gradients"	*Anal. Biochem.* **42**, 14–20 (1971)
Christie, W. H.	(See Snyder, F.)	
Coleman, R. L.,*[2] J. A. Dean,* W. D. Shults, M. T. Kelley	"Applications of the GeMSAEC Photometric Analyzer in Environmental Analysis. The Determination of Phosphate"	*Anal. Lett.* **4**, 169–85 (1971)
Coleman, R. L.,*[2] W. D. Shults, M. T. Kelley, J. A. Dean*	"Environmental Applications of a Centrifugal Photometric Analyzer"	*Amer. Lab.* **3**, 26 (1971)
Dyer, F. F.	(See Bate, L. C.)	
Eldridge, J. S.	(See Anderson, D. H.)	
	(See O'Kelley, G. D.)	
Feldman, C.	Book Review of: *Atomic Absorption Analysis*, B. V. Lvov, U.S. Dept. of Commerce Clearinghouse for Federal Scientific and Technical Information, Springfield, Va., 1969	*Appl. Spectrosc.* **25**, 582 (1971)
Fulmer, C. B.,* K. S. Toth,* I. R. Williams,* T. H. Handley et al.	"Photonuclear Reactions in Iron and Aluminum Bombarded with High-Energy Electrons"	*Phys. Rev. C* **2**, 1371–78 (1970)
Goldstein, G.	(See Caton, J. E.)	
	(See Rubin, I. B.)	
Guerin, M. R.	(See Matthews, D. R.)	

1. Present address: Biochemistry Department SH70, University of Washington, Seattle, Wash. 98105.
2. Present address: Harvard Medical Unit, Boston City Hospital, 818 Harrison Ave., Boston, Mass. 02118.

AUTHOR(s)	TITLE	PUBLISHER
Handley, T. H.	(See Fulmer, C. B.)	
Hatcher, D. W.[3]	"Rapid Automated Analyses Performed in Parallel"	*Clin. Chem.* **17**, 475–80 (1971)
Heurtibise, M.,* W. J. Ross[4]	"Application of an Iodide Specific Resin to the Determination of Iodine in Biological Fluids by Activation Analysis"	*Anal. Chem.* **43**, 1438–41 (1971)
Horton, A. D., W. D. Shults, A. S. Meyer	"Determination of Nitrogen, Sulfur, Phosphorus, and Carbon in Solid Ecological Materials via Hydrogenation and Element Selective Detection"	*Anal. Lett.* **4**, 613 (1971)
Hulett, L. D.	"Measurements of Chemical Shifts in the Photoelectron Spectra of Arsenic and Bromine Compounds"	*Appl. Spectrosc.* **25**, 33–36 (1971)
Hulett, L. D., T. A. Carlson,* B. R. Fish,* J. L. Durham*	"Studies of Sulfur Compounds Absorbed on Smoke Particles and Other Solids by Photoelectron Spectroscopy"	*Proc. Symp. Air Quality, 101st Amer. Chem. Soc. Nat. Meeting, Los Angeles, Calif., Apr. 1, 1971*, Plenum, Washington, D.C.
Kelley, M. T.	"Modern Trends in Radiochemical Analytical Methods"	*Pure Appl. Chem.* **26**, 65–74 (1971)
	"A Simple Monitor for Disk Storage of FOCAL Programs with Flexible Subroutine Linkings"	*Proc. Spring 1971 DECUS Symp., May 13–15, 1971, Atlanta, Georgia*, Computer Users Society, Maynard, Mass., pp. 53–57 (1971)
	(See Coleman, R. L.)	
Kelley, M. T., J. M. Jansen*	"Programming Concepts for the GeMSAEC Rapid Photometric Analyzer"	*Clin. Chem.* **17**, 701–6 (1971)
Kelley, M. T., W. D. Shults, R. L. Coleman,*[2] J. A. Dean*	"Application of the GeMSAEC Rapid Photometric Analyzer to Inorganic Microanalysis"	*Proc. VIth Int. Symp. Microtech., Graz, Austria, Sept. 7–11, 1970.* Wiener Medinische Akademie Verlag, Wien, Austria, 1970
Kubota, H.	"In-Field Behavior of and Cumulative Effects on Certain Electrodes in a Gamma Field"	*Anal. Chem.* **42**, 1593–96 (1970)
Kuempel, J. R.,*[5] W. D. Shults	"An Electrochemical Monitor for Air Pollution"	*Anal. Lett.* **4**, 107–16 (1971)
Lyon, W. S., H. H. Ross	"Following Instructions: Research People Versus General Population"	*Chem. Tech.* **1**, 510 (1971)
Lyon, W. S., G. H. Whitlock*	"Validity of Some Tests of Intellectual Ability for Predicting Grades in Related Craft Training"	*Exp. Publ. System* **1**, ms. 024C (August 1969)
Matthews, D. R., W. D. Shults, M. R. Guerin, J. A. Dean*	"The Extraction-Derivatization-G.C. Determination of Trace Phosphate in Aqueous Media"	*Anal. Chem.* **43**, 1582 (1971)
Meyer, A. S.	(See Horton, A. D.)	
Moore, F. L.	"New Method for Separation of Americium and Curium and Associated Elements in the Zirconium Phosphate–Nitric Acid System"	*Anal. Chem.* **43**, 487–89 (1971)

3. Present address: St. Mary's Memorial Hospital, Knoxville, Tenn. 37917.
4. Work performed while on leave of absence to the Instituto Venezolano de Investigaciones Cientificas, Caracas, Venezuela.
5. Present address: Department of Chemistry, DePauw University, Greencastle, Ind. 46135.

AUTHOR(s)	TITLE	PUBLISHER
Mrochek, J. E.,* W. C. Butts[1] W. T. Rainey, Jr., C. A. Burtis*	"Separation and Identification of Urinary Constituents by Use of Multiple Analytical Techniques"	*Clin. Chem.* **17**, 72 (1971)
O'Kelley, G. D.,* J. S. Eldridge, E. Schonfeld,* P. R. Bell*	"Cosmogenic Radionuclide Concentrations and Exposure Ages of Lunar Samples from Apollo 12"	*Proc. Second Lunar Sci. Conf.*, **2**, *Chem. Isotope Anal.* suppl. No. 2; *Geochim. Cosmochim. Acta* 1747–55 (1971)
	"Abundances of the Primordial Radionuclides, K, Th, and U in Apollo 12 Lunar Samples by Nondestructive Gamma-Ray Spectrometry"	Ibid, pp. 1159–68
Raaen, Helen P.*[6]	"Chromatography and 77°K Luminescence of Some Hydrocarbons on Thin Layers of Microcrystalline Nylon-Polytetrafluoroethylene (Aviamide-6-Fluoroglide 200)"	*J. Chromatog.* **53**, 600–4 (1970)
	"Chromatography of Metal Ions on Thin Layers of Polytetrafluoroethylene with di-(2-ethylhexylorthophosphoric Acid"	*J. Chromatog.* **53**, 605–9 (1970)
Rainey, W. T., Jr.	(See Butts, W. C.)	
	(See Mrochek, J. E.)	
	(See Snyder, F.)	
Reynolds, S. A.	"Radioactive Materials: Problems Under Scrutiny"	*Science* **171**, 955 (1971)
	"National Uses and Needs for Standard Radioactive Material"	Panel Report, National Academy of Sciences, Washington, D.C. (1970)
Ricci, E.	"Stable Tracers: Determination, Medical Use and Potential in Studies of Biological Effects of Chronic, Low Dose Irradiation"	*Trans. Amer. Nucl. Soc.* **14**(1), 103 (1971)
	"Simple, Reliable Basic Equation for Photon-Reaction Analyses of Biological Materials"	*Nucl. Instr. Meth.* **94**, 565–72 (1971)
	"Analisis por Activacion"	*Energ. Nucl.* **66**(XIV), 303 (July–August 1970) (in Spanish)
Ross, H. H.	(See Lyon, W. S.)	
Ross, W. J.	(See Heurtibise, M.)	
Rubin, I. B., T. J. Mitchell,* G. Goldstein	"A Program of Statistical Designs for Optimizing Specific Transfer Ribonucleic Acid Assay Conditions"	*Anal. Chem.* **43**, 717–21 (1971)
Shults, W. D.	(See Coleman, R. L.)	
	(See Horton, A. D.)	
	(See Kelley, M. T.)	
	(See Kuempel, J. R.)	
	(See Matthews, D. R.)	
	(See Stokely, J. R., Jr.)	
Sites, J. R.	(See Carter, J. A.)	
Smith, D. H.	"Mass Spectrometric Investigation of Surface Ionization. VII. The First Ionization Potential of Curium"	*J. Chem. Phys.* **54**, 1424–25 (1971)
	"Mass Spectrometric Investigation of Surface Ionization. VIII. Desorption of Th^+, Np^+, and Pu^+ from Rhenium Surfaces"	*J. Chem. Phys.* **54**, 4137–38 (1971)

6. Present address: Isotopes Development Center, ORNL.

AUTHOR(s)	TITLE	PUBLISHER
	"Mass Spectrometric Investigation of Surface Ionization. IX. Desorption of Uranium and Thorium Neutrals from Rhenium. Desportion of Thorium Neutrals from Tungsten"	*J. Chem. Phys.* **55**, 1482–84 (1971)
Smith, D. H., A. E. Cameron, J. A. Dean*	"Mass Spectrometric Investigation of Surface Ionization. VI. Desorption of Th^+, Np^+, and Pu^+ from Tungsten Surfaces"	*J. Chem. Phys.* **54**, 170–74 (1971)
Snyder, F.,* W. T. Rainey, Jr., M. L. Blank*	"The Source of Oxygen in the Ether Bond of Glycerolipids. ^{18}O Studies"	*J. Biol. Chem.* **245**, 5835–56 (1970)
Stokely, J. R., Jr., W. D. Shults	"Controlled-Potential Coulometric Determination of Plutonium in the Presence of Iron"	*Anal. Chem.* **43**, 603–5 (1971)
Whiting, F. L.,*[7] G. Mamantov,* G. M. Begun,* J. P. Young	"Raman Spectra of Solute Species in Molten Fluorides; O_2^-, CrO_4^{2-}, CO_3^{2-}"	*Inorg. Chim. Acta* **5**, 260 (1971)
Young, J. P.	(See Whiting, F. L.)	
Zittel, H. E., T. H. Row*	"Radiation and Thermal Stability of Spray Solutions"	*Nucl. Tech.* **10**, 436–43 (1971)

7. Present address: E. I. du Pont de Nemours and Co., Kinston, N.C. 28501.

Theses

AUTHOR	TITLE	PUBLISHER
Clayton, F. R.	*Electrochemical Studies in Molten Fluorides and Fluoroborates*	University of Tennessee, Knoxville, December 1971
Coleman, R. L.	*An Investigation of the Utility of Parallel Photometric Analysis for Environmental Determinations*	University of Tennessee, Knoxville, August 1971
McCracken, J. E.	*The Development and Application of Coulotrimetry: Controlled-Current Coulometric Titrimetry*	University of Missouri, Columbia, June 1971
Ricci, E.	*Application of Low-Energy Proton Reactions to the Measurement of Carbon and Nitrogen Isotopic Ratios*	University of Tennessee, Knoxville, March 1971
Wolford, J. C.	*Ligand Exchange Chromatography of Nucleic Acid Components and Related Compounds*	University of Tennessee, Knoxville, December 1970

Reports

AUTHOR(s)	TITLE	REPORT NO. AND DATE
Cameron, A. E., W. H. Christie, H. S. McKown, W. T. Rainey, Jr., D. H. Smith	*Analytical Mass Spectrometry at Oak Ridge National Laboratory*	ORNL-4643 (January 1971)
Scott, C. D.,* C. A. Burtis,* J. E. Caton, J. E. Mrochek,* W. W. Pitt *	*Biochemical Separation Systems Section of the Molecular Anatomy Program Progress Report for the Period March 1, 1970, to August 31, 1970*	ORNL-TM-3166 (December 1970)

AUTHOR(s)	TITLE	PUBLISHER
Guerin, M. R., W. D. Shults	*Tobacco Smoke Analysis Program Progress Report for the Period January 1, 1970, to September 1, 1970*	ORNL-4642 (January 1971)
Guerin, M. R., W. L. Maddox, A. D. Horton	*Practical Considerations in the Establishment of a Cigarette Smoke Inhalation Bioassay Facility Using Small Laboratory Animals*	May 19, 1971 (unpublished)
Kelley, M. T.	*Statistical Quality Control Report, Analytical Chemistry Division –*	
	July Through September 1970	Oct. 20, 1970
	October Through December 1970	Jan. 19, 1971
	January Through March 1971	April 26, 1971
	April Through June 1971	June 16, 1971 (unpublished)
Lyon, W. S., C. A. Horton	*Analytical Chemistry Division Annual Progress Report for Period Ending September 30, 1970*	ORNL-4636 (January 1971)
Quincy, R. B., Jr., C. T. Butler,* B. J. Sturm,* D. E. LaValle	*Preparation of MgO Powder Having Low Al and Fe Content*	ORNL-TM-2935 (May 1970)
Butler, C. T.,* B. J. Sturm,* R. B. Quincy, Jr.	*Arc-Fusion Growth and Characterization of High Purity MgO Crystals*	ORNL-4547 (June 1970)
Reynolds, S. A.	"Radioisotope Standards, Characterization, and Quality Control," pp. 42–43 in *Division of Isotopes Development Research and Development Projects: 1970*	TID-4006 (February 1971)
	A Survey of Needs for Radioactivity Standards	ORNL-TM-3229 (September 1970)
Lin, K. H.,* N. C. Bradley,* S. A. Reynolds	"Cesium-137 Source Development and Characterization," pp. 36–37 in *Division of Isotopes Development Research and Development Projects: 1970*	TID-4006 (February 1971)
Wallace, R. A.,* W. Fulkerson,* W. D. Shults, W. S. Lyon	*Mercury in the Environment – The Human Element*	ORNL-NSF-EP-1 (January 1971)
White, J. C.	*Analytical Chemistry Division Research and Development Monthly Summary –*	
	October 1970	Oct. 29, 1970
	November 1970	Dec. 3, 1970
	December 1970	Jan. 11, 1971
	January 1971	Feb. 2, 1971
	February 1971	March 5, 1971
	March 1971	April 2, 1971
	April 1971	April 29, 1971
	May 1971	June 7, 1971
	June 1971	July 1, 1971
	July 1971	Aug. 2, 1971
	August 1971	Aug. 31, 1971
	September 1971	Sept. 30, 1971 (unpublished)
Willmarth, T. E.	*Report of Foreign Travel to France, Switzerland, The Netherlands, and England – August 28 to September 28, 1970*	Oct. 20, 1971 (unpublished)
Zittel, H. E.	*Design Considerations of Reactor Spray Systems – Part VIII. Boiling Water Reactor Accident Radiolysis Studies*	ORNL-TM-2412, Part VIII, (October 1970)

ORAL PRESENTATIONS

Oral presentations in conferences and seminars of many types continue to offer effective means for the dissemination of results achieved in the programs of the Division as well as keeping the members of the staff abreast of modern analytical chemistry. During this year, Division personnel have participated in the following activities.

Fifteenth Conference on Analytical Chemistry in Nuclear Technology

The fifteenth convocation of this conference that is sponsored by the Analytical Chemistry Division was held in Oak Ridge, October 12–14, 1971. Twenty-eight papers were presented in five half-day sessions devoted to the specific areas of "Chromatographic Methods of Analysis" and "Application of Photoelectron Spectroscopy in Analytical Chemistry," and to topics of a more general nature.

Members of the Conference Committee were: L. J. Brady, Chairman; H. R. Beatty, Treasurer; Gerald Goldstein; Gerald Goldberg; L. D. Hulett; M. T. Kelley; and J. C. White.

At Meetings of Professional Societies, Conferences, and the Like

AUTHOR(s)	TITLE	PRESENTED AT
Attrill, J. E., C. D. Scott*	"Experience with the GeMSAEC, an Automated Fast Analyzer for Clinical Chemistry"	American Association of Clinical Chemists, Birmingham, Ala., Oct. 24, 1970
Burtis, C. A.,* W. F. Johnson,* C. D. Scott,* J. E. Attrill, N. G. Anderson*	"Increase in the Rate of Sample Thru-put by Use of a 42-Cuvette GeMSAEC"	Spring Meeting, South Eastern Section, American Association Clinical Chemists, Gatlinburg, Tenn., Apr. 24, 1971
Bate, L. C.	"Determination of Mercury in Biological Samples by Neutron Activation Analysis"	American Nuclear Society Meeting, Nuclear Methods in Environmental Research, University of Missouri, Columbia, Mo., Aug. 22–25, 1971
Carter, J. A., J. R. Sites	"Determining ppb Mercury Concentrations Using a Spark-Source Mass Spectrometer"	American Society of Mass Spectroscopy Conference, Atlanta, Ga., May 3–7, 1971
Carter, J. A., W. S. Lyon, R. W. Morrow, R. A. Wallace*	"The Occurrence and Analysis of Mercury in the Environment"	East Tennessee Section, American Chemical Society, Oak Ridge, Tenn., Nov. 5, 1970
Christie, W. H., H. S. McKown	"Mass Spectrometer Data Acquisition and Processing Using a 'Midi' Computer"	14th Conference on Analytical Chemistry in Nuclear Technology, Gatlinburg, Tenn., Oct. 13–15, 1970
Coleman, R. L.,* J. A. Dean,* W. D. Shults, M. T. Kelley	"Application of the GeMSAEC Centrifugal Photometric Analyzer to Environmental Analysis"	14th Conference on Analytical Chemistry in Nuclear Technology, Gatlinburg, Tenn., Oct. 13–15, 1970
Dunn, H. W.	"Use of Computers for Electron Probe, X-Ray Diffraction, X-Ray Absorption Edge, and X-Ray Fluorescence Analysis at ORNL"	14th Conference on Analytical Chemistry in Nuclear Technology, Gatlinburg, Tenn., Oct. 13–15, 1970
Dyer, F. F., E. Ricci, J. C. White	"Special Nuclear Capabilities at Oak Ridge National Laboratory for Application to Environmental Pollution Studies"	14th Conference on Analytical Chemistry in Nuclear Technology, Gatlinburg, Tenn., Oct. 13–15, 1970

Eldridge, J. S., K. J. Northcutt, G. D. O'Kelley*	"Standards for Low-Level Gamma-Ray Spectrometry of Lunar and Geochemical Samples"	161st American Chemical Society National Meeting, Los Angeles, Calif., Mar. 28–Apr. 2, 1971
O'Kelley, G. D.,* J. S. Eldridge, E. Schonfeld,* P. R. Bell,*	"Comparative Radionuclide Concentrations and Ages of Apollo 12 Samples from Nondestructive Gamma-Ray Spectrometry"	1971 Lunar Science Conference, Houston, Tex., Jan. 11–14, 1971
Feldman, Cyrus	"The Mercury Problem"	Southeast Section of Society for Applied Spectroscopy, University of Tennessee, Knoxville, Tenn., May 14, 1971
Goldstein, Gerald, J. C. Wolford,* J. A. Dean*	"Separation of Oxypurines by Ligand-Exchange Chromatography"	Joint Southeast-Southwest Regional Meeting, American Chemical Society, New Orleans, La., Dec. 2–4, 1970
Hulett, L. D.	"Chemical and Biological Applications of Photoelectron Spectroscopy"	Lecture, Southeastern Louisiana College, Hammond, La., Nov. 23, 1970
	"Photoelectron Spectrometry"	Lecture, University of Missouri, Kansas City, Mo., Dec. 4, 1970
Hulett, L. D., R. E. Clausing,* L. H. Jenkins,* M. O. Krause,* H. L. Davis*	"Electron Spectroscopy"	ASM Symposium on Modern Microanalytical Techniques in Metallurgy, Oak Ridge, Tenn., Nov. 4, 1970
Hulett, L. D., T. A. Carlson,* J. L. Durham,* B. R. Fish*	"Studies of Aggressive Chemicals Adsorbed on Smoke Particulates by Photoelectron Spectroscopy"	161st American Chemical Society National Meeting, Los Angeles, Calif., Mar. 28–Apr. 2, 1971
Kelley, M. T.	"A Modified FOCAL System for Real-Time Applications of a 4K PDP-8/I Computer"	14th Conference on Analytical Chemistry in Nuclear Technology, Gatlinburg, Tenn., Oct. 13–15, 1970
	"A Simple Monitor for Disc Storage of FOCAL Programs with Flexible Subroutine Linking"	Digital Equipment Computers Users Society 1971 Spring Symposium, Atlanta, Ga., May 13–15, 1971
	"The GeMSAEC Program at ORNL"	Seminar, Analytical Sciences Division, A.E.R.E., UKAEA, Harwell, England, July 2, 1971
Kelley, M. T., J. M. Jansen*	"Programming Concepts for the GeMSAEC Rapid Photometric Analyzer"	Third Annual Symposium on High-Resolution Analyses and Advanced Analytical Concepts for the Clinical Laboratory, ORNL, Oak Ridge, Tenn., Mar. 11–12, 1971
Kelley, M. T., W. D. Shults, R. L. Coleman,* J. A. Dean*	"Application of the GeMSAEC Rapid Photometric Analyzer to the Turbidimetric Analysis of Sulfate"	Third International SAC (Society for Analytical Chemistry) Conference, Durham, England, July 12–16, 1971
Kelly, M. J.,* C. J. Barton,* A. S. Meyer	"Experimental Results from Processing Gasbuggy Gas in Natural Gas Processing Plant"	Tritium Symposium Sponsored by EPA and University of Nevada, Las Vegas, Nev., Aug. 30–Sept. 2, 1971

Laing, W. R.	"Programmable Desk Calculators for Service Laboratory Use"	14th Conference on Analytical Chemistry in Nuclear Technology, Gatlinburg, Tenn., Oct. 13–15, 1970
Lyon, W. S.	"Nuclear Techniques for Hg"	Panelist, East Tennessee Section, ACS, Analytical Chemistry Section, Oak Ridge, Tenn., Nov. 5, 1970
	"Nuclear and Radiochemical Methods in Environmental	Eastern Analytical Symposium, New York, N.Y., Nov. 18–20, 1970
	"Activation Analysis for Trace Metals"	Trace Activation Analysis Symposium, University of Illinois, Urbana, Ill., Jan. 7–8, 1971
Moss, M. L.	"Applications of the GeMSAEC Analyzer in the Clinical Laboratory"	14th Conference on Analytical Chemistry in Nuclear Technology, Gatlinburg, Tenn., Oct. 13–15, 1970
	"Muscular Dystrophy Research"	Discussion on Television Station WATE, Knoxville, Tenn., Oct. 11, 1970
Mueller, T. R.	"Topics in Electroanalytical Chemistry"	Seminar, Departments of Chemistry and Physics, Biology, Agriculture and Industrial Arts, Middle Tennessee State University, Murfreesboro, Tenn., Oct. 27, 1970
Reynolds, S. A.	"A Survey of Needs for Radioactivity Standards"	161st American Chemical Society National Meeting, Los Angeles, Calif., Mar. 28–Apr. 2, 1971
Ricci, E.	"Nuclear-Reaction Microprobe"	ASM Symposium on Modern Microanalytical Techniques in Metallurgy, Oak Ridge, Tenn., Oct. 26, 1970
	"Stable Tracers: Determination, Medical Use and Potential in Studies of Biological Effects of Chronic, Low-Dose Irradiation"	1971 Annual Meeting of the American Nuclear Society, Boston, Mass., June 13–17, 1971
Ross, H. H.	"Analytical Applications of the Secondary Effects of Radiation"	Eastern Analytical Symposium, New York, N.Y., Nov. 18–20, 1970
Shults, W. D.	"Coulometric Methods of Analysis"	Analytical Specialists Meeting, Union Carbide Corp., Tarrytown, N.Y., Oct. 20, 1970
	"Electroanalytical Methods"	Trace Metals Analytical Symposium, University of Illinois, Urbana, Ill., Jan. 7, 1971
Shults, W. D., J. E. McCracken,* J. C. Guyon,*	"Coulometric Titrimetry with Feedback-Controlled Electrolysis Current"	Third International SAC (Society for Analytical Chemistry) Conference, Durham, England, July 12–16, 1971

Stelzner, R. W.	"The Dedicated Small Computer: Some Applications in the ORNL Analytical Chemistry Division"	Lecture, Chemistry Department, University of Tennessee, Knoxville, Tenn., Dec. 7, 1970
Stelzner, R. W., D. J. Fisher M. T. Kelley	"Dedicated Digital Computer Polarographic Systems"	14th Conference on Analytical Chemistry in Nuclear Technology, Gatlinburg, Tenn., Oct. 13–15, 1970
Stokely, J. R., W. D. Shults	"The Controlled-Potential Coulometric Determination of Plutonium in the Presence of Iron"	14th Conference on Analytical Chemistry in Nuclear Technology, Gatlinburg, Tenn., Oct. 13–15, 1970
White, J. C.	"Some Observations on the Future of Analytical Chemistry"	East Tennessee Section, ACS, Analytical Chemistry Group, Oak Ridge, Tenn., May 20, 1971
Wike, J. S., C. E. Lamb, L. T. Corbin	"Handling and Dissolution of Samples from the Molten-Salt Reactor"	14th Conference on Analytical Chemistry in Nuclear Technology, Gatlinburg, Tenn., Oct. 13–15, 1970

ORNL Seminars

A series of "in-house" seminars, that featured both staff members of the Division and invited lecturers, was programmed during the year to maintain communication within the Division and with those ORNL Research Divisions that use the services of the Analytical Chemistry Division. The subjects of these seminars were:

AUTHOR(s)	TITLE	PRESENTED AT
Bard, Allen J. University of Texas at Austin	"Electrogenerated Chemiluminescence"	ORNL Analytical Chemistry Seminar, May 7, 1971
Butts, W. C.	"Identification of Urinary Constituents"	ORNL Analytical Chemistry Seminar, June 15, 1971
Carter, J. A.	"Trace Element Balance Around a Coal Fired Steam Plant – Use of Spectrometric Methods"	ORNL-NSF Environmental Program Symposium, Aug. 31, 1971
Caton, J. E.	"The Potential of High Resolution Analytical Electrophoresis"	ORNL Analytical Chemistry Seminar, April 27, 1971
Dyer, F. F.	"Everything You've Ever Wanted to Know About High Sensitivity Activation Analysis But Were Afraid to Ask"	ORNL Analytical Chemistry Seminar, Feb. 23, 1971
Hulett, L. D.	"New Capabilities in the Analytical Chemistry Division: Scanning Electron Microscopy, Photoelectron Spectroscopy"	ORNL Analytical Chemistry Seminar, Mar. 23, 1971
Kuwana, Theodore Case Western Reserve University	"Some Applications of Optically Transparent Electrodes"	ORNL Analytical Chemistry Seminar, Apr. 16, 1971
Laing, W. R., D. A. Costanzo	"Analytical Services and Capabilities at ORNL"	ORNL Chemical Technology Division Seminar, Nov. 4, 1970
Lyon, W. S.	"Trace Element Balance Around a Coal Fired Steam Plant – Use of Activation Analysis"	ORNL-NSF Environmental Program Symposium, Aug. 31, 1971
	"Tracer Methods in Environmental Studies"	ORNL Seminar for Visiting IAEA Group, July 30, 1971

Mueller, T. R.	"Some New Capabilities in Analytical Instrumentation"	ORNL Analytical Chemistry Seminar, Oct. 20, 1970
Ross, W. J.	"Venezuela on $500 a Day"	ORNL Analytical Chemistry Seminar, Aug. 17, 1971
Shults, W. D.	"Environmental Research in the Analytical Chemistry	ORNL Analytical Chemistry Seminar, Jan. 19, 1971
Young, J. P.	"New Analytical Service: Facility for Spectrophotometric Studies of Highly Radioactive Materials"	ORNL Analytical Chemistry Seminar, Dec. 15, 1970
Zittel, H. E.	"Radiolytic H_2 Evolution in a Loss-of-Coolant Accident"	ORNL Nuclear Safety Program Seminar, Dec. 17, 1970

Service Laboratory Seminars

Emphasis is being given to informing members of the Service Laboratories about current developments in analytical chemistry as well as providing "refresher" courses to maintain the quality of both scientific and technical personnel at a high level. The following seminars were given during the year for these specific purposes:

SPEAKER	TITLE	DATE
J. E. Mrochek Chemical Technology Division, ORNL	High Resolution Liquid Chromatography	Oct. 22, 1970
V. J. Tennery Metals and Ceramics Division, ORNL	Analytical Requirements for the High Performance Reactor Fuels	Dec. 3, 1970
W. T. McDuffie Chemical Technology Division, ORNL	Analytical Requirements for the LWBR Program at ORNL	Jan. 21, 1971
T. R. Mueller Analytical Chemistry Division, ORNL	Applied Controlled-Potential Coulometry	April 22, 1971

Summer Lecture Series

The 1971 Summer Lecture Series for the Service Laboratory chemists and technicians was given by members of the Division staff. Topics and lecturers of the nine sessions were:

Spectrophotometry – J. P. Young, W. R. Laing, L. J. Brady
Acid-Base Systems – H. Kubota, D. A. Costanzo
Coulometry – W. D. Shults, J. R. Stokely

PATENTS

AUTHOR(s)	TITLE	PATENT NO.	DATE ISSUED
Bate, L. C., F. F. Dyer	"Method for Effecting Uniform Radiation of Samples"	3,535,205	Oct. 20, 1970
Ricci, E., T. H. Handley, M. G. Willey*	"Fluid Supported Capsule Holder for Homogeneously Irradiating Samples"	3,549,492	Dec. 22, 1970

ARTICLES REVIEWED OR REFEREED FOR PERIODICALS

Reviewer or referee	Number of articles reviewed or refereed for indicated periodicals																					
	Anal Biochem.	*Anal. Chem.*	*Anal. Chim. Acta*	*Anal. Lett.*	*ASTM Methods*	*Chem. Instrum.*	*Environ. Sci. Technol.*	*Health Phys.*	*Ind. Eng. Chem.*	*Isotop. Radiat. Technol.*	*J. Chromatogr. Sci.*	*J. Electrochem. Soc.*	*J. Inorg. Nucl. Chem.*	*J. Phys. Chem.*	*Nature*	*Nucl. Technol.*	*Org. Mass Spectrom.*	*Phys. Rev.*	*Radiochem. Radioanal. Lett.*	*Science*	*Soc. Exper. Biol. Proc.*	Total
Attrill, J. C.																					1	1
Butts, W. C.		1																				1
Cameron, A. E.		1																				1
Christie, W. H.		1																				1
Costanzo, D. A.																			2			2
Emery, J. F.		1																				1
Feldman, C.		2	1													1						4
Fisher, D. J.		5				2	1															8
Horton, A. D.		1									2											3
Hulett, L. H.															1							1
Kubota, H.		4																				4
Lyon, W. S.		4																	9			13
Manning, D. L.		3										2										5
Moore, F. L.		1	2						1				2									6
Mueller, T. R.						2																2
Rainey, W. T.																	1					1
Reynolds, S. A.					7					2								1	1	1		12
Ricci, E.		3						1														4
Ross, H. H.		1																				1
Shults, W. D.	1	5																				6
Stelzner, R. W.		5				2																7
White, J. C.		1		1																		2
Young, J. P.		1												1								2
Total	1	40	3	1	7	6	1	1	1	2	2	2	2	1	1	1	1	1	12	1	1	88

ANALYTICAL CHEMISTRY DIVISION

NOVEMBER 1, 1971

M. T. KELLEY, DIRECTOR
B. ELIZABETH YOUNG, SECRETARY
J. C. WHITE, ASSOCIATE DIRECTOR
EDITH M. ZARZECKI, SECRETARY

CONSULTANTS
J. A. DEAN, UNIVERSITY OF TENNESSEE
GLEB MAMANTOV, UNIVERSITY OF TENNESSEE
A. O. C. NIER, UNIVERSITY OF MINNESOTA

ADVISORY COMMITTEE
L. B. ROGERS, EXP. 12-31-73, PURDUE UNIVERSITY
M. A. EVENSON, EXP. 12-31-73, UNIVERSITY OF WISCONSIN
S. SIGGIA, EXP. 12-31-74, UNIVERSITY OF MASSACHUSETTS

STAFF
M. L. MOSS, BIOANALYTICAL PROGRAMS
C. FELDMAN, ENVIRONMENTAL POLLUTION PROGRAM
O. E. LAVALLE, INORGANIC PREPARATIONS
F. S. JONES[2]
S. B. LUPICA[7]
H. R. BEATTY,[9] BUDGETS AND COSTS
J. S. WIKE,[1] RADIATION AND SAFETY OFFICER
J. S. ELDRIDGE,[1] COORDINATOR FOR RADIOCHEMICAL ANALYSES IN AN EMERGENCY
A. L. HARROD, ADMIN. ASST.
A. H. MATTHEWS
SHARON C. RADER, SECRETARY

ANALYTICAL SERVICES
L. T. CORBIN, ASSISTANT DIRECTOR
SUZANNE Q. THOMPSON, SECRETARY

METHODS DEVELOPMENT AND EVALUATION LABORATORY
D. A. COSTANZO, GROUP LEADER
J. L. BOTTS
D. C. CANADA[8]
L. G. FARRAR
G. GOLDBERG
J. R. LUND
F. L. MOORE

ANALYST
P. S. GOUGE

GENERAL HOT-ANALYSES LABORATORY
C. E. LAMB, SUPERVISOR
C. K. TALBOTT, ASST. SUPERVISOR
S. R. DINSMORE[4]
R. E. JONES
F. L. LAYTON
E. C. LYNN
J. C. PRICE

ANALYSTS
R. BURNS
B. E. GILL
WANDA C. MASSEY
W. F. ROGERS

HIGH-LEVEL ALPHA RADIATION LABORATORY
J. H. COOPER, SUPERVISOR
W. F. VAUGHAN

BUILDING 3508
ANALYSTS
R. W. HARVEY
K. C. LANNOM
D. D. PAIR

BUILDING 7920
H. C. MEYER, ASST. SUPERVISOR
E. C. FEARNOW
J. M. PEELE

A SHIFT	B SHIFT	C SHIFT	D SHIFT
T. G. SCOTT*	P. W. PAIR*	C. P. BAKER*	J. D. PENDLETON*
	C. C. FOUST**		
ANALYST	ANALYST	ANALYST	ANALYST
J. T. WHITE[10]	W. H. AKERS	R. A. JONES	G. R. ARCHER

*SHIFT SUPERVISOR
**RELIEF SHIFT SUPERVISOR

GENERAL ANALYSES LABORATORY
W. R. LAING, SUPERVISOR
L. J. BRADY, ASST. SUPERVISOR
H. G. DAVIS
J. A. EALY[8]
N. MARION FERGUSON
K. W. GENTRY
C. F. HARRISON[3]
D. R. MATTHEWS
J. H. MONEYHUN
W. R. MUSICK
R. L. SHERMAN
G. R. WILSON

ANALYSTS
C. SUE ALLEY
W. E. BAYLESS
EDNA E. BONIFACIUS
GERTRUDE S. BROWN
MARTHA R. CHILDS
C. A. CLARK
C. J. COLEY
J. H. HACKNEY
J. D. HILL
A. H. MARSHALL
J. H. OXENDINE
B. PHILPOT
ROBERTA M. RAMSEY
G. W. ROBINSON
PATRICIA M. ROWAN
KATHLEEN I. WEBB
C. M. WILSON[10]
J. V. WINCHESTER

RADIOISOTOPES-RADIOCHEMISTRY LABORATORY
E. I. WYATT, SUPERVISOR
R. R. RICKARD, ASST. SUPERVISOR
W. T. MULLINS[2]
H. A. PARKER
M. E. PRUITT
J. S. WIKE[1]

ANALYSTS
J. H. DAVIDSON
C. L. GHANN
L. R. HALL
E. C. HENDREN[4]
RUTH H. HOLLAND
K. J. NORTHCUTT[6]
SUE H. PRESTWOOD
J. SLESSINGER, JR.
W. R. WARREN

RESEARCH AND DEVELOPMENT

ANALYTICAL INSTRUMENTATION
D. J. FISHER, GROUP LEADER
R. W. STELZNER, ASSISTANT GROUP LEADER
W. L. MADDOX
T. R. MUELLER

REACTOR PROJECTS
A. S. MEYER, GROUP LEADER
J. M. DALE, ASSISTANT GROUP LEADER
R. F. APPLE
A. D. HORTON
D. L. MANNING
A. L. TRAVAGLINI

J. P. YOUNG

ELECTRON AND X-RAY PHYSICS METHODS
L. D. HULETT, GROUP LEADER
H. W. DUNN

NUCLEAR AND RADIOCHEMISTRY
W. S. LYON, JR., GROUP LEADER
H. H. ROSS, ASSISTANT GROUP LEADER
L. C. BATE
F. F. DYER
J. S. ELDRIDGE[1]
J. F. EMERY
T. H. HANDLEY
S. A. REYNOLDS[5]
E. RICCI
J. E. STRAIN

H. E. ZITTEL

ANALYTICAL BIOCHEMISTRY
G. GOLDSTEIN, GROUP LEADER
J. E. ATTRILL
W. C. BUTTS[8]
J. E. CATON, JR.
I. B. RUBIN

METHODOLOGY
W. D. SHULTS, GROUP LEADER
M. R. GUERIN
H. K. KUBOTA
C. A. PRITCHARD
R. B. QUINCY
W. J. ROSS
J. R. STOKELY
H. W. WRIGHT

J. D. LODMELL[11]

ANALYST
GERALDINE OLERICH

MASS AND EMISSION SPECTROMETRY (Y-12)
J. A. CARTER,[1] SUPERVISOR
R. L. WALKER,[1] ASSISTANT SUPERVISOR

DORIS C. SMITH, SECRETARY

MASS SPECTROMETRY SERVICE
R. E. EBY, SUPERVISOR

ANALYSTS
TINA P. BACON
L. GUINN
MABEL M. HONAKER

SPECTROCHEMISTRY
J. A. CARTER,[1] SUPERVISOR
S. A. MACINTYRE
J. R. SITES

ANALYSTS
R. C. BRYANT
G. I. GAULT
E. H. WATERS

MASS SPECTROMETRY RESEARCH
D. H. SMITH

REFEREE ANALYSIS LABORATORY
R. L. WALKER,[1] SUPERVISOR
W. H. CHRISTIE
D. D. COTTRELL
H. S. MCKOWN
W. T. RAINEY, JR.
J. R. WALTON

ANALYSTS
E. G. MILLER
H. C. SMITH
DORA I. WHALEY

PERMANENT STAFF	MONTHLY	WEEKLY	TOTAL
ADMINISTRATIVE AND CLERICAL	3	6	9
SCIENTISTS	94		94
ANALYSTS		49	49
SUBTOTAL	97	55	152
OTHERS			
STUDENT GUEST	1		1
LOANEE FROM OTHER DIVISIONS	1	2	3
SUBTOTAL	2	2	4
GRAND TOTAL	99	57	156

[1]DUAL CAPACITY
[2]ON LOAN TO K-25
[3]ON LOAN TO SOLID STATE DIVISION
[4]ON LOAN TO CHEMICAL TECHNOLOGY DIVISION
[5]ON LOAN TO ISOTOPES DIVISION
[6]ON LOAN TO CHEMISTRY DIVISION
[7]ON LOAN TO HEALTH PHYSICS DIVISION
[8]LEAVE OF ABSENCE
[9]ON LOAN FROM THE BUDGET DEPARTMENT
[10]ON LOAN FROM THE METALS AND CERAMICS DIVISION
[11]STUDENT GUEST (UT)

ORNL-4749
UC-4 – Chemistry

INTERNAL DISTRIBUTION

1. R. F. Hibbs (Y-12)
2. A. M. Weinberg
3. F. L. Culler
4. H. I. Adler
5. N. G. Anderson
6. S. I. Auerbach
7. J. C. Barton (K-25)
8. S. E. Beall
9. M. Bender
10. D. S. Billington
11. R. E. Blanco
12. E. G. Bohlmann
13. C. J. Borkowski
14. G. E. Boyd
15. R. B. Briggs
16. O. W. Briscoe (Y-12)
17. R. E. Brooksbank
18. K. B. Brown
19. F. R. Bruce
20. W. D. Burch
21. R. S. Carlsmith
22. S. F. Carson
23. H. P. Carter
24. J. A. Cox
25. J. E. Cunningham
26. D. E. Ferguson
27. J. L. Fowler
28. J. H Frye, Jr.
29. J. H. Gillette
30. W. R. Grimes
31. W. O. Harms
32. D. J. Horen
33. W. H. Jordan
34. O. L. Keller
35. M. T. Kelley
36. Ann S. Klein
37. T. A. Lincoln
38. J. L. Liverman
39. R. S. Livingston
40. R. N. Lyon
41. F. C. Maienschein
42. K. Z. Morgan
43. Lewis Nelson
44. G. D. Novelli
45-46. R. B. Parker
47. H. Postma
48. M. E. Ramsey
49. J. H. Rowan (Y-12)
50. M. W. Rosenthal
51. A. F. Rupp
52. H. E. Seagren
53. M. J. Skinner
54. A. H. Snell
55. E. G. Struxness
56. D. A. Sundberg
57. E. H. Taylor
58. P. R. Vanstrum
59. C. W. Weber (K-25)
60. M. E. Whatley
61. R. G. Wymer
62. W. H. Christie
63. H. S. McKown
64. W. T. Rainey, Jr.
65. D. H. Smith
66. J. H. Cooper
67. H. C. Meyer
68. L. T. Corbin
69. C. Feldman
70. D. J. Fisher
71. R. W. Stelzner
72. G. Goldstein
73. J. E. Caton
74. W. R. Laing
75. L. J. Brady
76. C. E. Lamb
77. C. K. Talbott
78. D. E. LaValle
79. W. S. Lyon
80. H. H. Ross
81. F. F. Dyer
82. E. Ricci
83. H. Kubota
84. H. E. Zittel
85. S. A. Reynolds
86. M. L. Moss
87. A. S. Meyer
88. W. Fulkerson
89. J. H. Gibbons
90. J. M. Dale
91. J. P. Young
92. W. D. Shults
93. M. R. Guerin

94. W. J. Ross
95. J. R. Stokely
96. J. R. Sites
97. R. E. Eby
98. J. A. Carter
99. R. L. Walker
100. D. A. Costanzo
101-104. J. C. White
105. L. D. Hulett
106. E. I. Wyatt
107. R. R. Rickard
108. M. A. Evenson (advisory committee)
109. L. B. Rogers (advisory committee)
110. S. Siggia (advisory committee)
111. J. A. Dean (consultant)
112. G. Mamantov (consultant)
113. A. O. C. Nier (consultant)
114. Biology Library
115-117. Central Research Library
118. Laboratory Shift Supervisor
119. ORNL – Y-12 Technical Library Document Reference Section
120-159. Laboratory Records Department
160. Laboratory Records, ORNL R.C.

EXTERNAL DISTRIBUTION

161. Sterling Forest Laboratory, Union Carbide Corporation, New York
162. J. A. Swartout, 270 Park Avenue, New York 17, New York
163. R. C. Shank, Idaho Falls
164. T. W. McIntosh, Division of Reactor Development and Technology, U.S. Atomic Energy Commission, Washington, D.C. 20545
165. duPont Company, Wilmington
166. Bettis Plant, Westinghouse Atomic Power Laboratory
167. William Mott, Division of Isotope Development, AEC, Washington, D.C.
168. Lt. J. C. Courtney, MCL-NI, 1155 Technical Operations Squadron, McClellan Air Force Base, Calif. 95652
169. Library, Nuclear Fuel Services, Inc., Erwin, Tenn. 37650
170. J. Frazer, Lawrence Radiation Laboratory, Livermore, Calif.
171. W. W. Grigorieff, Assistant to the Executive Director, Oak Ridge Associated Universities
172. Robert Lewin, Paducah
173. Research Center Library, Union Carbide Corporation, P.O. Box 324, Tuxedo, New York
174. W. W. Meinke, Analytical Chemistry Division, National Bureau of Standards, Washington, D.C. 20234
175. Gio B. Gori, National Cancer Institute, National Institutes of Health, Bethesda, Md. 20014
176. R. K. Stevens, National Air Pollution Control Adm., 3820 Merton Dr., Raleigh, N.C.
177. R. L. Belcher, Reactor Center, Nuclear Eng. Dept., University of Maryland, College Park, Md.
178. Laboratory and University Division, AEC, ORO
179. Patent Office, AEC, ORO
180-370. Given distribution as shown in TID-4500 under Chemistry category (25 copies – NTIS)