LOCKHEED MARTIN ENERGY RESEARCH LIBRARIES

3 4456 0515387 4

CENTRAL RESEARCH LIBRARY

ORNL-4775

copy 94

THEORETICAL EVALUATION OF CONSUMER PRODUCTS FROM PROJECT GASBUGGY. FINAL REPORT. TRITIUM BEHAVIOR IN A NATURAL GAS PROCESSING PLANT

M. J. Kelly
C. J. Barton
A. S. Meyer
E. W. Chew
C. R. Bowman

OAK RIDGE NATIONAL LABORATORY
CENTRAL RESEARCH LIBRARY
DOCUMENT COLLECTION
LIBRARY LOAN COPY
DO NOT TRANSFER TO ANOTHER PERSON
If you wish someone else to see this document, send in name with document and the library will arrange a loan.
UCN-7969
(3 3-67)

OAK RIDGE NATIONAL LABORATORY
OPERATED BY UNION CARBIDE CORPORATION • FOR THE U.S. ATOMIC ENERGY COMMISSION

Printed in the United States of America. Available from
National Technical Information Service
U.S. Department of Commerce
5285 Port Royal Road, Springfield, Virginia 22151
Price: Printed Copy $3.00; Microfiche $0.95

This report was prepared as an account of work sponsored by the United States Government. Neither the United States nor the United States Atomic Energy Commission, nor any of their employees, nor any of their contractors, subcontractors, or their employees, makes any warranty, express or implied, or assumes any legal liability or responsibility for the accuracy, completeness or usefulness of any information, apparatus, product or process disclosed, or represents that its use would not infringe privately owned rights.

ORNL-4775
UC-41 — Health and Safety
UC-35 — Nuclear Explosions — Peaceful Applications

Contract No. W-7405-eng-26

THEORETICAL EVALUATION OF CONSUMER PRODUCTS FROM PROJECT GASBUGGY. FINAL REPORT. TRITIUM BEHAVIOR IN A NATURAL GAS PROCESSING PLANT

M. J. Kelly, C. J. Barton, A. S. Meyer,
E. W. Chew, and C. R. Bowman

JULY 1972

OAK RIDGE NATIONAL LABORATORY
Oak Ridge, Tennessee 37830
operated by
UNION CARBIDE CORPORATION
for the
U.S. ATOMIC ENERGY COMMISSION

LOCKHEED MARTIN ENERGY RESEARCH LIBRARIES
3 4456 0515387 4

CONTENTS

Abstract 1

Introduction 1

Pre-Test Planning 2

Organizational Participation 2

Transportation of Gasbuggy Gas 3

Plant and Experiment Description 4
- Normal Plant Operation 4
- Plant Test Operation 6
- Test Description 7

Environmental Measurements 8

Distribution of Tritium Among Plant Products 10
- Tanker Gas 10
- Plant Input 12
- Plant Output 14
  - Calculated activity output 14
  - Product material balance 15
  - Output gas 15
  - Plant fuel gas 16
- Liquid Product Separation System 18
  - Absorber oil 18
  - Activity balance 18
  - The high-pressure still reflux system 20
  - The final accumulator 20
  - The separated liquid products 21
  - Natural gasoline 22
  - Propane product 23
  - Butane product 23
- Summary – Distribution of Tritium in Plant Products 25

Conclusions 25

Acknowledgments 25

Appendix A 26

THEORETICAL EVALUATION OF CONSUMER PRODUCTS FROM PROJECT GASBUGGY. FINAL REPORT. TRITIUM BEHAVIOR IN A NATURAL GAS PROCESSING PLANT

M. J. Kelly[1] C. J. Barton[1] A. S. Meyer[2]
E. W. Chew[3] C. R. Bowman[3]

ABSTRACT

An experiment was performed in a small natural gas processing plant near Big Lake, Texas, to study the behavior of tritium during the processing of natural gas containing tritiated hydrocarbons. Approximately 40,000 ft^3 of natural gas drawn from the Project Gasbuggy well, created by the detonation of a 29-kiloton nuclear explosion near Farmington, New Mexico, on December 10, 1967, was transported to the plant in two tank trucks. This gas, containing 12.5 mCi of tritium, was diluted with 1,800,000 ft^3 of field gas during a 12-hr period. The tritium activity in the diluted gas entering the plant and in the output gas was measured continuously during the experiment with on-line monitors. Samples of gas and liquid plant products were taken periodically and transported to Oak Ridge National Laboratory or to a commercial laboratory for analysis. Additional tritium (about 70 mCi) in the form of HT was added to the fuel gas being burned in plant boilers or compressors during the test to raise the tritium level in the plant atmosphere to detectable levels. Analysis of 30 samples of atmospheric moisture collected during the test showed a maximum concentration of tritium in air of 131 pCi/m^3, which would give a calculated whole-body dose of 0.06 millirem for continuous exposure during a normal working year (2000 hr). Analysis of urine samples from people present in the plant during the test showed a maximum individual dose commitment of 0.65 millirem, which may have resulted from a small escape during transfer of the tritium used to spike the fuel gas. Plant operators received small or undetectable tritium dose commitments during the experiment. The observed tritium distribution among plant products followed the pattern predicted by pre-test calculations. There was no evidence of isotopic exchange that would cause a buildup of tritium in the plant processing oil. The test results suggest that plant processing of gas from nuclearly stimulated wells will result in doses less than 1% of natural background to plant operating personnel and no other operating problems.

INTRODUCTION

Natural gas is normally processed to remove undesirable impurities as well as liquid hydrocarbons before it goes into transmission lines. It is important to determine the distribution of tritium in gas from a nuclearly stimulated well among the various plant products and to estimate the doses that plant personnel will receive while operating a plant processing gas containing radionuclides.

This subject was examined theoretically in an earlier report,[4] using production data from the Blanco plant of the El Paso Natural Gas Company (EPNG) and analyses of natural gas from the Gasbuggy well. Project Gasbuggy, a joint effort of EPNG, the Bureau of Mines (USBM), and the Atomic Energy Commission (AEC) with technical assistance provided by Lawrence Livermore Laboratory, resulted in creation of the Gasbuggy well by detonation of a 29-kiloton nuclear explosive at a depth of 4240 ft on December 10, 1967, near Farmington, New Mexico. A considerable quantity of gas is consumed in the operation of processing plants, and the gas from a nuclearly stimulated well may have a higher concentration of radionuclides at this point than at points of consumer use, where the contaminated gas will probably be further diluted with gas from other sources. The theoretical study did not and could not answer all questions regarding the problems of processing gas containing tritiated hydrocarbons. In

---

1. Reactor Chemistry Division, ORNL.
2. Analytical Chemistry Division, ORNL.
3. El Paso Natural Gas Company, El Paso, Tex.
4. D. G. Jacobs et al., *Theoretical Evaluation of Consumer Products from Project Gasbuggy – Final Report, Phase I: Impact of Hypothetical Releases of Contaminated Gas in the San Juan Basin,* ORNL-4646 (September 1971).

particular, the possibility of a buildup of tritium in the plant processing oil under normal operating conditions needed to be examined experimentally. Furthermore, it appeared desirable to confirm the theoretical calculations of dispersion of plant combustion products and subsequent doses received by plant operating personnel and to study the distribution of tritium among plant products. In order to meet these needs, a plant test was performed in a small natural gas processing plant (Barnhart plant) located near Big Lake, Texas, using tritiated hydrocarbons in 40,000 ft^3 of gas (NTP) from the Gasbuggy well as the tracer, supplemented by tritium in the form of HT supplied by the Isotopes Division of ORNL. Other aspects of the Gasbuggy studies have been discussed in several reports.[5-8]

PRE-TEST PLANNING

Discussions of, and planning for, the plant test extended over a period of approximately 1½ years before the test was performed in February 1971. Personnel principally involved in the planning stage, in addition to the authors, are associated with EPNG, ORNL, and the AEC (Oak Ridge, Washington, and Nevada offices), but a number of people in other organizations contributed to the plans or were consulted in making them.

Several plants were considered as possible locations for the experiment before the Barnhart plant was selected for use. The principal factors leading to the selection of the Barnhart plant were its small size, which resulted in minimum dilution of Gasbuggy gas, and the availability of facilities for separating liquid gas components into three fractions.

An important part of the pre-test planning was the calculation of tritium distribution among plant products, which was performed independently by EPNG and ORNL personnel. The resulting data were used to examine the feasibility of analytical detection of tritium in various samples and for an evaluation of the radiological aspects of the test. One outcome of this study was the decision to increase the tritium concentration in the fuel gas consumed in boilers and compressors in the plant in order to raise the concentration of HTO in atmospheric moisture to a detectable level.

Negotiations among the organizations mentioned above led to the distribution of responsibilities listed below (actual quantities of activities determined by post-test analyses are given).

A sampling schedule for the test was established in order to determine the number of sample containers of various types required. Circumstances arising during the test made necessary some changes in the pre-test schedule. These changes are mentioned in connection with discussions of the analytical data. The pre-test schedule called for 16 gas samples; 15 samples of butane, propane, and gasoline; 18 samples of absorber oil; 4 samples from the low-pressure absorbers and reabsorbers; 30 samples of atmospheric moisture; and about 40 urine samples.

ORGANIZATIONAL PARTICIPATION

Discussions among the various parties involved in the experiment resulted in the following assignment of responsibilities:

---

5. D. G. Jacobs et al., *Theoretical Evaluation of Consumer Products from Project Gasbuggy – Final Report, Phase II: Hypothetical Population Exposures outside San Juan Basin,* ORNL-4748 (February 1972).

6. C. J. Barton, D. G. Jacobs, M. J. Kelly, and E. G. Struxness, "Radiological Considerations in the Use of Natural Gas from Nuclearly Stimulated Wells," *Nucl. Technol.* **11**, 335 (1971).

7. D. G. Jacobs, E. G. Struxness, M. J. Kelly, and C. R. Bowman, "Consideration of the Radiological Impact from the Hypothetical Use of Contaminated Gas from Nuclearly Stimulated Reservoirs," *Health Phys.* (in press).

8. D. G. Jacobs, E. G. Struxness, and C. R. Bowman, "A Preliminary Assessment of the Radiological Implications of Commercial Utilization of Natural Gas from a Nuclearly Stimulated Well," p. 831 in *Proceedings of the ANS Topical Meeting, Engineering with Nuclear Explosives,* Las Vegas, Nevada, January 1970, CONF-700101 (Vol. 1).

1. Coordination of plans for the experiment and obtaining subsequent approval of health authorities in the State of Texas was arranged by AEC Headquarters in Washington, D.C.

2. A letter agreement providing authority for the test and delegating responsibility for the various aspects of the experiment listed below was executed by the Oak Ridge Operations Office, AEC, with EPNG.

3. Transportation of the Gasbuggy gas was arranged by ORNL, but the cost of transporting the gas was borne by EPNG. Health physics surveillance of the loading and unloading of the gas was provided by ORNL. Since the gas (containing 12.5 mCi of tritium) was divided between two trucks and there was no external gamma radiation, permission to transport the gas was not required by Department of Transportation regulations.

4. Gaseous tritium (about 70 mCi of HT) was supplied by the ORNL Isotopes Division in a 30-cm^3 steel container equipped with valves at both ends. The gas and the equipment for injecting it into the plant gas stream were transported to the plant in a station wagon provided by ORNL.

5. Plant operation during the test was carried out by the regular EPNG operating personnel. This included disposal of contaminated plant products by flaring or venting.

6. A trailer-mounted continuous on-line monitor, which was used on the exit gas line, and liquid scintillation equipment were supplied by EPNG, together with operating personnel.

7. A portable on-line tritium monitor, used on the inlet gas line, and the operator were supplied by USBM.

8. Sample containers were provided by ORNL for samples listed in the sampling schedule, and sampling was performed by ORNL personnel with the assistance of EPNG plant operators. Other samples were taken in sample containers provided by EPNG and analyzed in their laboratories or in EPNG contractor laboratories.

9. Health physics surveillance during the test was provided by ORNL. This included procurement of urine samples.

10. ORNL samples were transported to ORNL in the station wagon mentioned in item 4 above.

11. Analyses of ORNL hydrocarbon and atmospheric moisture samples produced in the experiment were performed by ORNL Analytical Chemistry Division personnel. Urine analyses were done in the ORNL Health Physics Division. Selected hydrocarbon samples were analyzed by EPNG and EPNG contractor laboratories.

12. A public announcement concerning the conduct of the experiment was prepared by EPNG and, following approval by the AEC and ORNL, was released to the press at El Paso, Texas, on February 7, 1971.

TRANSPORTATION OF GASBUGGY GAS

As noted in the organizational participation, item 3, approximately 40,000 ft^3 of Gasbuggy gas was transported in two tank trucks, normally used to carry propane, from the Gasbuggy well in New Mexico to the Barnhart plant in west Texas. Figure 1 shows the trucks connected to the Barnhart gas inlet line. Two ORNL workers, including a health physicist, were present while the trucks were being loaded during the morning of February 8, 1971, and accompanied the trucks until they arrived at Barnhart the following day.

Fig. 1. Tank trucks containing Gasbuggy gas connected to the Barnhart plant gas inlet line.

PLANT AND EXPERIMENT DESCRIPTION

Normal Plant Operation

The Barnhart plant, part of which is shown in Fig. 2, was designed to extract 75,700 gal/day of liquid products from 25 $M^2 ft^3$ of inlet gas.[9] It normally operates with 7.5 $M^2 ft^3$/day of gas supplied from three separate fields (30% of design capacity). Since the inlet gas pressure is very near the atmospheric level, 1.9 $M^2 ft^3$/day of gas is required to fuel the compressors that raise the plant gas pressure to the level required for processing and to supply other plant energy needs. This can be compared with 11 $M^2 ft^3$/day consumed in EPNG's Blanco plant, which processes 576 $M^2 ft^3$/day. Thus, the Blanco plant, with 77 times the input of Barnhart, uses only about 6 times as much gas for onsite processing. Consequently, potential exposures of plant personnel to combustion products of tritiated gas at Barnhart are comparable to those at much larger gas processing plants. A schematic diagram of the plant is shown in Fig. 3. It uses a typical oil-absorption–distillation separation system. A description of normal plant operations follows.

Field gas enters the plant at low pressure and is compressed to 175 psig, cooled to 90°F, and passed through a separator that may remove some condensables directly to the final accumulator, which is the storage tank for unseparated products. We believe that only a small fraction of the entering tritium activity followed this route under test operating conditions.

---

9. M in gas industry terminology and in this report represents 10^3; $M^2 = 10^6$. We use ft^3 to designate cubic feet rather than the symbols cf or CF that are used in the gas industry.

Fig. 2. View of Barnhart plant with compressor building on left, absorber columns and EPNG trailer on right, and Gasbuggy inlet control-metering loop in foreground.

Field gas then flows up through the absorber, coming in contact with downcoming absorber oil, No. 1 diesel, which extracts the heavier hydrocarbons in the gas stream. The extraction is essentially complete for butane and heavier hydrocarbons, perhaps 70% for the propane, and appreciable for ethane. The overhead stream leaving the absorber is output gas which, after passing through a scrubber, would normally enter a pipeline to consumers. The bottom stream, rich absorber oil, containing the eventual liquid products plus some methane and ethane, is heated to 320°F and pumped into the hot oil vent tank, kept at 156 psig. The absorption oil and some small fraction of the very heavy components then pass directly to the middle section of the high-pressure still. The lighter components flash through a condenser into the vent accumulator at 90°F and 150 psig.

A fraction of the final liquid product condenses in the vent accumulator and is transferred to the high-pressure still. Essentially all of the methane and ethane and some of the propane and butane pass as gas into the reabsorber, which is operated at 120 psig. The reabsorber operates in the same manner as the absorber but at a lower pressure. Its overhead stream is rich in ethane and is used as plant fuel gas. The bottom rich oil stream goes to the high-pressure still for liquid product removal.

The high-pressure still overhead stream contains nearly all the hydrocarbons that eventually become liquid products. This stream feeds the reflux accumulator, which recirculates part of its contents back to the upper plates of the high-pressure still. The product is condensed and transferred to the final accumulator at the same rate it is received from the still.

The bottom stream from the high-pressure still, primarily lean absorption oil, goes to a low-pressure still, where the fraction of the natural gasoline remaining is extracted and sent to the final accumulator. The lean absorption oil from the low-pressure still is returned to the lean oil surge tank and reenters the above-described system.

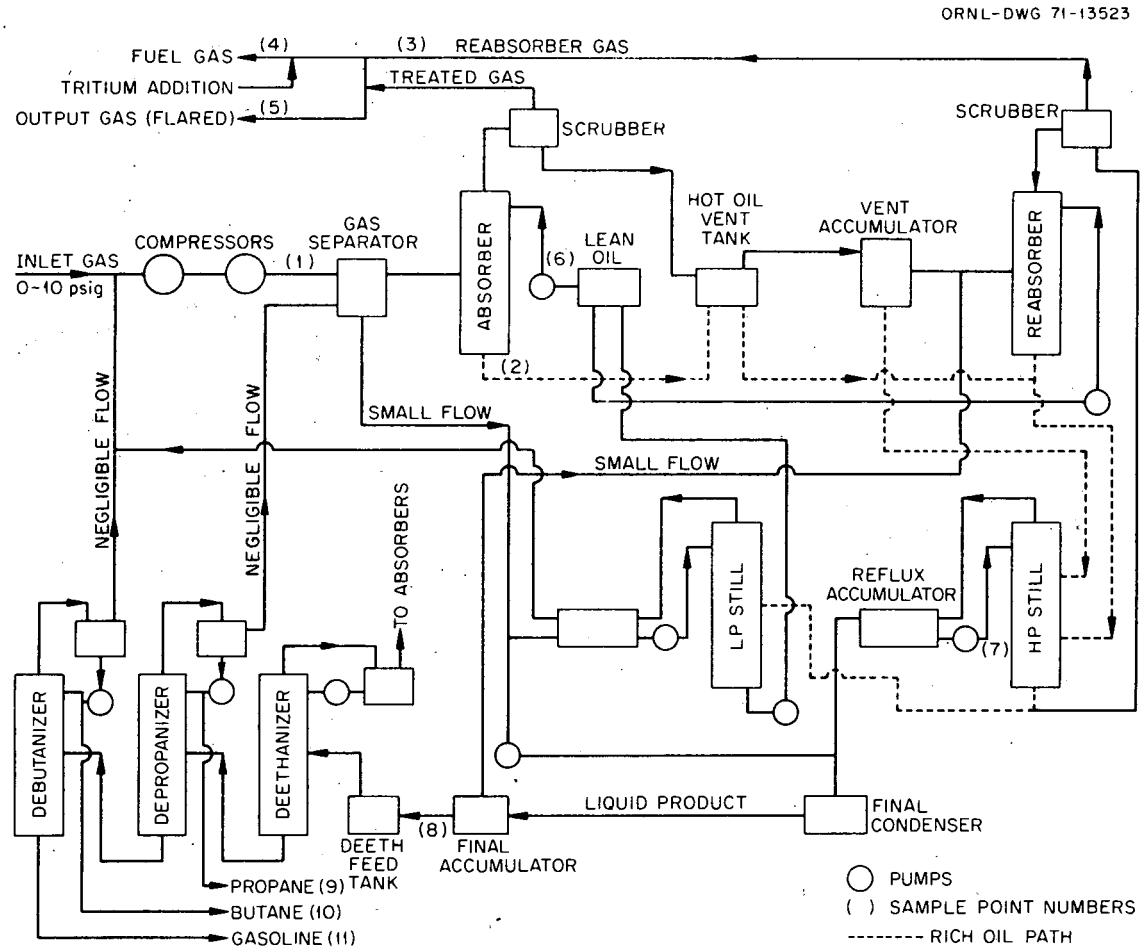

Fig. 3. Schematic diagram of processing plant.

The unseparated liquid products entering the final accumulator pass on to three stills, each of which is equipped with a reflux accumulator. The first still removes ethane and any methane remaining for transfer back to the reabsorber. The second still separates propane from the other product liquids. The bottom stream from its reflux accumulator splits into a return feed to the top column plates and a propane product stream which is withdrawn at the still input rate.

The last still separates the butanes in a similar fashion, and its bottom stream is the natural gasoline product.

It is important to remember that each tank in the system represents a mixing process and will degrade the amplitude of an entering step function, round its corners, and widen it. In addition to this, process lag (i.e., the time of transport through piping) lengthens the time interval required for a liquid product to show activity at a sample location.

Plant Test Operation

A simplified flow diagram showing approximate gas and liquid flow rates during the test, as well as sample points, is shown in Fig. 4. The principal changes from normal plant operating conditions described above are:

1. Plant input gas rate was reduced to 3.6 $M^2 ft^3$/day.
2. Gasbuggy gas was mixed with inlet gas at a rate of 80 Mft^3/day.
3. Tritium (as HT) was added to the fuel gas line at a rate of about 140 mCi/day.
4. All plant products produced during the test period and the following 10 hr and not consumed in plant operations were vented or flared.
5. The feed rate to the separations system was varied during the test, as described below, in order to reduce the volume of liquids in the fuel accumulator tank (Fig. 3).

Test Description

At 0800 hours on February 10, the Barnhart plant throughput rate was reduced to the level that plant supervisors considered to be the minimum practical operating value. By 1015, stable operating conditions were achieved at an observed throughput rate of 3.6 $M^2 ft^3$/day, and metered flow of Gasbuggy gas from the tankers was started. In less than 20 min the tritium concentration had reached a significant level in the plant output gas, as shown by the EPNG on-line continuous tritium monitor.

The flow of Gasbuggy gas was stopped for a short time at around 1130 on February 10 in order to make a change in the flow control system. Fifteen minutes later the flow was restarted at a higher flow rate.

At 1200, the addition of supplementary tritium gas to the fuel gas lines, as shown in Fig. 4, was started.

Shortly after the test started, it was observed that the plant operators had stored 12,250 gal of liquids in the final accumulator tank (see Fig. 3) because of the expected low liquid production rate during the test and the need for an adequate volume of liquid to feed the separation columns. The effective dilution of incoming tritiated product, which would have resulted in lower tritium values than we considered desirable,

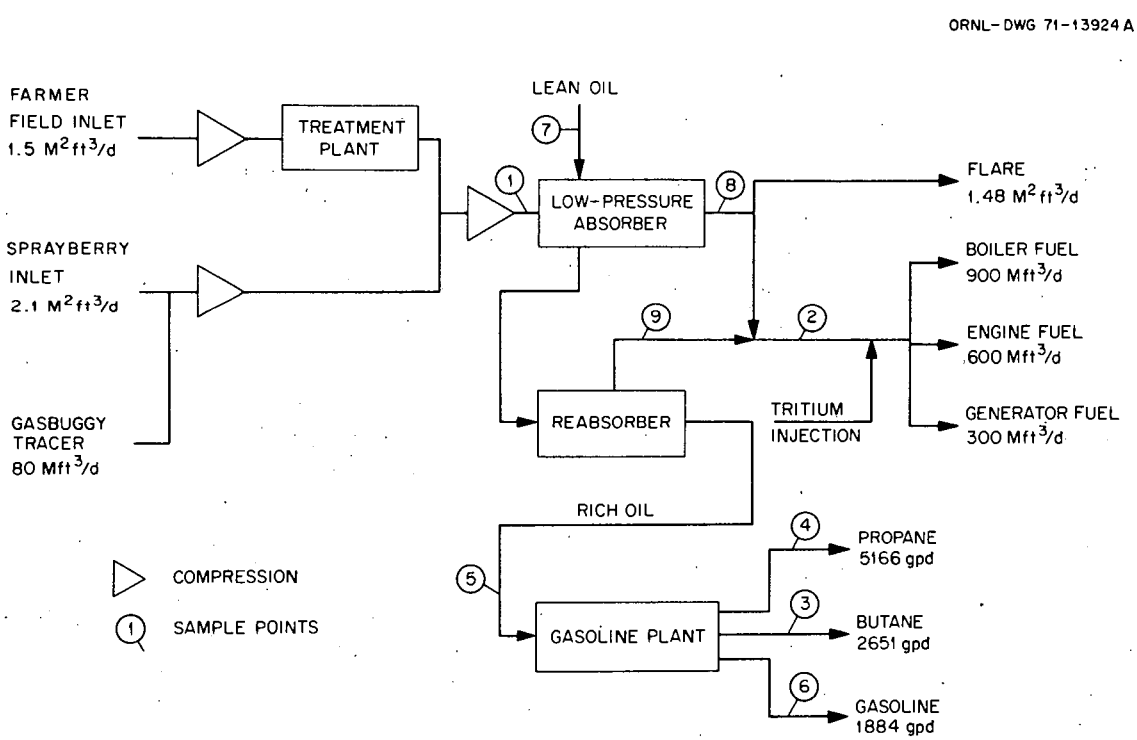

Fig. 4. Simplified diagram of Barnhart plant, showing test flow rates and sample points.

was minimized by raising the product separation rate and reducing the liquid volume in the final accumulator to less than 6000 gal by 1530 hours. The separations system rate was then reduced to steady-state operation, maintaining from 5500 to 6000 gal in the accumulator tank at a liquid product rate of approximately 400 gal/hr.

At about 1630 a change in both the Gasbuggy and input gas flow rates occurred. The execution of a normal operating procedure under the test conditions produced these unexpected changes. The flow rates were corrected and then reduced by 1800 on February 10. The flow rates remained constant until the Gasbuggy gas was exhuasted at 2200 on February 10. Based on the observed response to changes in the Gasbuggy gas input rate, it came as no surprise that the tritium concentration in the output gas dropped an order of magnitude at the EPNG on-line gas monitor within about 1 hr after the input of tritiated gas was terminated.

The addition of tritium to the fuel gas was terminated at around 2100 hours. The atmospheric moisture samples were collected and placed in sealed bottles as rapidly as possible after the termination of the test at 2200 hours. Hydrocarbon liquid and gas sampling continued until 1500 hours on February 11.

The plant was returned to normal operation at about 0830 on February 11, and the processed gas output was diverted from the flare used during the test to the output pipeline.

At 1000, the liquid plant products were diverted to clean tanks for later sale, since the tritium concentration was below the level detectable with onsite facilities.

The tank trucks which transported the Gasbuggy gas were steamed out during the morning of February 11, and the resulting condensate was sampled for analysis, as was a small quantity of liquid hydrocarbons that was removed with the condensate.

Throughout the test, observations were made of wind direction and velocity as well as of atmospheric humidity. The significance of these data will be apparent from the following discussion.

ENVIRONMENTAL MEASUREMENTS

Two types of tests were performed in order to evaluate the atmospheric dispersion and the resulting radiation dose commitment from the tritiated water vapor in the combustion effluents. Urine samples were taken from everyone present in the plant during the test. Some people who were exposed during both days that the test was in progress provided two samples. Also, moisture samples provided a measure of the average tritium concentration in the atmosphere. These samples were returned to ORNL, where the tritium concentration in each urine sample was determined by Health Physics Division personnel; where the tritium concentration was found to be above background level, dose commitments were calculated. Results are given in Table 1. The estimated uncertainty in the calculated total dose commitments is ±0.02 millirem, and doses less than 0.02 milirem are reported in Table 1 as background. In the table, technical and supervisory personnel are identified by letters and operators by numerals. "Dose commitment" is defined as the total dose accumulated from a specific radionuclide ingested by an individual during the time that the radionuclide remains in his system or during his lifetime.

It is interesting to note that the larger dose commitments are for people involved in tritium transfers, either through instrument calibration or through preparing the tritium spike for the plant fuel gas. Calculated dose commitments from skin absorption and inhalation of combustion products of gas consumed during the test using area moisture sample data (see below) are much lower than even the small operator dose commitments. The only credible mechanism for the measured operator dose commitments is direct leakage from equipment exhausts within the plant buildings.

Atmospheric moisture samples (collected in 200 g of indicating Drierite in handmade metal mesh cups) were returned to ORNL in their sealed containers, where they were weighed to determine the amount of moisture collected, and then the water was removed by distillation. The tritium concentration in the water was determined by liquid scintillation. Spiking aliquots of the water samples with known quantities of tritium showed that some impurity in them prevented normal scintillation efficiency. Consequently, all samples were redistilled from sodium peroxide, which resulted in normal scintillation efficiency.

The tritium concentration in the moisture samples was converted into atmospheric concentration by use of the average moisture content of the air during the test. The resulting data in terms of picocuries per cubic meter of air were put on a plot plan of the plant, according to sample locations, and curves corresponding to various concentration levels were drawn, as shown in Fig. 5. The wind was blowing, during most of the test period, toward the northeast at speeds of about 20 to 25 mph. The principal source of

Table 1. Tritium dose commitments resulting from exposure during plant test

Organization	Individual	Date sampled	Total dose commitment[a] (millirems) ± 0.02
EPNG	A	2-11-71	0.65
	B	2-11-71	0.13
	C	2-10-71	0.10
	C	2-11-71	0.14
ORNL	A	2-10-71	0.35
	A	2-11-71	0.36
	B	2-11-71	0.05
	C	2-10-71	BG[b]
USBM	A	2-11-71	BG
Eberline	A	2-11-71	0.17
	B	2-11-71	0.08
Truck	A	2-10-71	BG
	B	2-10-71	BG
EPNG	1	2-10-71	BG
	1	2-11-71	0.026
	2	2-10-71	BG
	2	2-11-71	0.029
	3	2-10-71	0.024
	3	2-11-71	BG
	4	2-10-71	BG
	4	2-11-71	BG
	5	2-10-71	BG
	5	2-11-71	BG
	6	2-11-71	BG
	7	2-10-71	0.035
	8	2-11-71	BG
	9	2-10-71	BG
	10	2-10-71	BG
	11	2-10-71	BG
	12	2-10-71	BG
	13	2-11-71	BG
	14	2-10-71	BG
	15	2-10-71	BG
	16	2-10-71	BG

[a]"Dose commitment" is defined as the dose recieved from a given radioisotope intake during the lifetime of the individual.

[b]BG = minimum dose commitment considered significant = 0.02 millirem.

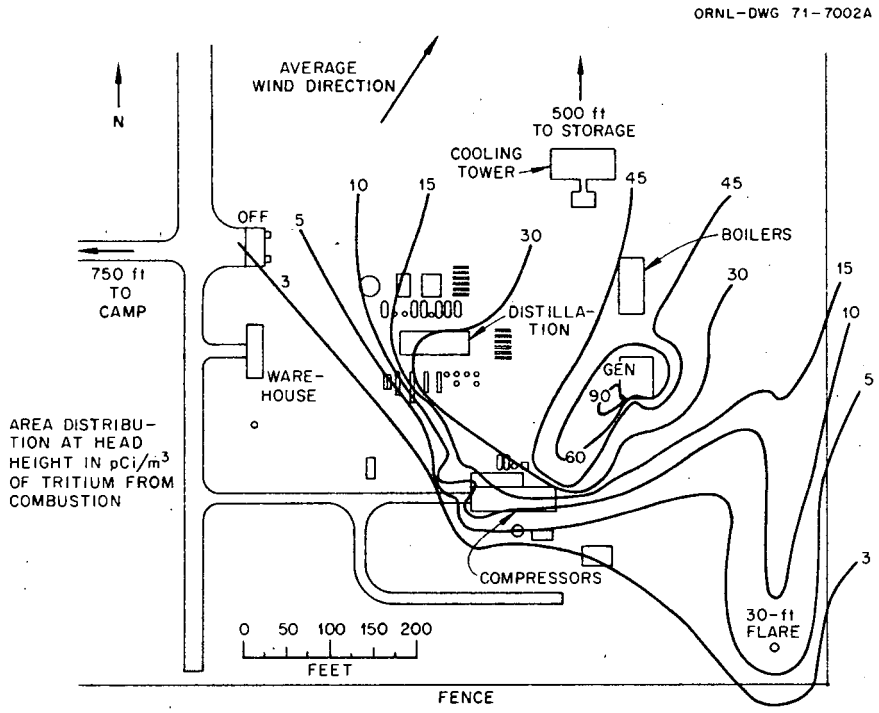

Fig. 5. Average distribution of tritium in plant atmosphere during test.

airborne tritium in the area sampled was the compressors. The compressor stacks were on the upwind sides of the compressor building, and because of the stiff breeze and low stack height, the combustion products from the compressors downwashed between the compressor building and the generator building, giving a maximum air concentration of 131 pCi/m^3. A plant operator exposed to this tritium concentration throughout his work year (2000 hr) would receive a dose commitment of about 0.06 millirem.

DISTRIBUTION OF TRITIUM AMONG PLANT PRODUCTS

Tanker Gas

The chemical composition and the tritium content of the tanker contents were determined for three samples, taken at intervals during the test period. The results are shown in Table 2.

The reliability of the analyses for methane plus hydrogen and for ethane can be tested using data reported by Smith[10] for a Gasbuggy sample taken when the tankers were loaded. Specific activities at the time of the experiment, calculated from Smith's data, are 10.0 pCi/cm^3 for methane plus hydrogen and 22.5 pCi/cm^3 for ethane, as compared with the Table 1 values of 10.4 and 25.5 pCi/cm^3 respectively. The propane values cannot be checked directly, because the tankers probably contained 1 atm of propane, their normal cargo, when loaded. Another sample that was taken at the time of tanker loading was passed through a pilot gasoline plant and fractionated into propane, butane, and natural gasoline fractions. Radiochemical analysis of the vapor over the propane liquid samples gave 13.4 ± 1.2 pCi/cm^3 for the

10. C. F. Smith, Jr., *Project Gasbuggy Quality Analysis and Evaluation, Tabulations of Radiochemical and Chemical Analytical Results,* UCRL-50635, Rev. 2 (April 1971).

Table 2. Analysis of tanker gas samples

NA – not applicable
NR – not run

	Sample No. 5 (1025)[a]		Sample No. 20 (1845)[a]		Sample No. 36 (2200)[a]		Average		Specific activity
	Composition (vol %)	Tritium (pCi/cm^3)	Composition (vol %)	Tritium (pCi/cm^3)	Composition (vol %)	Tritium (pCi/cm^3)	Composition (vol %)	Tritium (pCi/cm^3)	
$CH_4 + H_2$	75.10+	7.9 ± 0.3	74.91+	7.6 ± 0.3	75.02+	7.9 ± 0.3	75.01	7.8 ± 0.3	10.40 ± 0.4
C_2H_6	8.6	2.4 ± 0.2	7.7	1.9 ± 0.2	8.4	1.9 ± 0.2	8.23	2.1 ± 0.2	25.5 ± 2.4
C_3H_8	9.9	0.48 ± 0.05	8.1	0.43 ± 0.05	7.6	0.38 ± 0.04	8.53	0.43 ± 0.05	5.0 ± 0.6
C_4H_{10}	2.8	0.35 ± 0.04	3.3	0.52 ± 0.05	3.0	0.41 ± 0.04	3.03	0.43 ± 0.05	14.2 ± 1.6
C_5H_{12} +	0.72	NR	0.84	NR	0.83	NR	0.80	NR	NA
Other	2.82	NA	4.89	NA	4.46	NA	4.06		NA
^{85}Kr		1.9 ± 0.2		2.3 ± 0.3		2.1 ± 0.3		2.1 ± 0.3	NA

[a]Time that sample was taken.

specific activity of propane, in reasonable agreement with the 12.0 value calculated from Smith's[10] data and 11.64 pCi/cm^3 obtained by ORNL.

Using Smith's value of 3.7 mole % of propane in his undiluted sample and the 8.53 mole % reported for the tanker gas, we can calculate the expected propane specific activity to be (3.7/8.53) × 12.0 = 5.2 pCi/cm^3, in good agreement with the tanker gas analysis (5.0 pCi/cm^3).

The vapor from the fractionated butane had an activity of 17.2 ± 1.0 pCi/cm^3, as compared with 14.2 ± 1.6 pCi/cm^3 shown by the tanker analysis. The ORNL value for this sample was 17.0 pCi/cm^3. Since some butane is contained in commercial propane, the tanker analytical value was presumed to be correct.

The vapor from the wellhead natural gasoline fraction measured 23.1 ± 1.0 pCi/cm^3 when analyzed by the EPNG contractor, and this was used to calculate the amount of activity associated with the gasoline fraction. Later analysis by ORNL and EPNG indicated 27.9 and 31.5 pCi/cm^3 respectively. The tritium activity probably increases linearly with the number of hydrogen atoms in the hydrocarbon molecule. This is substantiated by analyses of the fractionated Gasbuggy samples, shown in Table 3. If any Gasbuggy drip liquids were carried into the tankers while loading, the inventory of tritium calculated using the concentration of heavier hydrocarbons in the gas phase in the tankers and the above acitvity is low by an unknown amount.

Weighing all the above information, the values shown in Table 4 were selected for use in all subsequent calculations. A value of 40 Mft^3 was used for the volume delivered from the tankers into the processing plant. Although gas analyses are reported at STP, we neglected the small correction to NTP in calculating the data in Table 4.

Plant Input

The plant input gas came from two gas fields, Farmer and Sprayberry. Samples of each of these streams were taken during the test period and were analyzed later. The results in volume percent are shown in Tables 5 and 6. The precision for the Farmer field, which supplied 40% of the input gas, is very good. The Sprayberry data indicate that the composition of the incoming gas was not constant. The flow rate from the Sprayberry field also fluctuated during the test period. From the analysis of the output streams, the composition of the entering gas mixture was calculated to be that shown in Table 7. The chemical composition is well within the uncertainty of the analytical data. The activities are based on a flow of 1.8

Table 3. Analysis of fractionated Gasbuggy wellhead samples and comparison of calculated vs experimental increase in vapor activity with increasing molecular weight

	C_3H_8	C_4H_{10}	C_5H_{12}	C_6H_{12}	C_7H_{16}	C_8H_{18}	C_9H_{20}
Calculated ^{3}H concentration (pCi/cm^3)	14.0[a]	17.5	21.0	24.5	28.0	31.5	35.0
Measured ^{3}H concentration (pCi/cm^3)							
EPNG contractor	13.4 ± 1.2	17.2 ± 1.0		23.1 ± 1.0		No sample	
ORNL	11.64			27.9			
EPNG				31.5			
Measured composition (mole fraction)	0.93 C_3H_8, 0.04 C_4H_{10}, 0.02 C_2H_6	0.97 C_4H_{10}, 0.03 C_3H_8		0.55 C_5H_{12}, 0.23 C_6H_{14}, 0.13 C_7H_{16}, 0.09 C_4H_{10}			

[a]Arbitrarily selected value.

$M^2 ft^3$ of incoming gas during the test period and the inventory shown in Table 3. The actual metered flow was 1.853 $M^2 ft^3$ from 1000 to 2200 hours.

The calculated plant input averaged over ½-hr intervals is shown in Fig. 6, together with recorder data from the USBM tritium monitor and spot data from samples analyzed at ORNL and by the EPNG contractor.

The USBM monitor was not calibrated, and the readings from this instrument were normalized to the expected average value. The calculated value from 1050 to 1135 is somewhat arbitrary, since the recording

Table 4. Tanker input molar gas composition and tritium inventory[a]

Component	Composition (mole %)	Tritium concentration (pCi/cm^3)	Tritium inventory (mCi)
$CH_4 + H_2$	75.3	7.78	8.33
C_2H_6	8.2	2.07	2.22
C_3H_8	8.5	0.43	0.49
C_4H_{10}	3.0	0.43	0.49
C_5H_{12} +	0.9	0.22	0.25
Inert	4.1		
Total	100	10.93	12.38
^{85}Kr		2.1	2.38

[a]Based on 40 Mft^3 at 60°F and 1 atm; tritium concentration is at STP.

Table 5. Chemical analysis of Farmer field input gas

Component	Composition (vol %)			Average
	0858[a]	1850[a]	2216[a]	
CH_4	71.37	72.18	72.02	71.86 ± 0.32
C_2H_6	14.39	13.95	14.60	14.31 ± 0.24
C_3H_8	6.24	6.05	6.31	6.20 ± 0.10
C_4H_{10}	2.76	2.62	2.89	2.76 ± 0.14
C_5H_{12} +	0.97	0.90	1.40	1.09 ± 0.21
Inert	4.27	4.30	2.78	3.78 ± 0.67

[a]Time that sample was taken.

Table 6. Chemical analysis of Sprayberry field input gas

Component	Composition (vol %)		Average
	0855[a]	2214[a]	
CH_4	82.02	73.79	77.91 ± 4.11
C_2H_6	4.30	6.71	5.51 ± 1.20
C_3H_8	4.25	8.64	6.45 ± 2.19
C_4H_{10}	1.50	3.76	2.63 ± 1.13
C_5H_{12} +	0.48	2.12	1.30 ± 0.82
Inert	7.45	4.98	6.22 ± 1.24

[a]Time that sample was taken.

flowmeter was not on, due to changes being made in the flow system. The large peak at 1530 hours and the gradual decrease after 1830 are not understood. These fluctuations may possibly be due to fluctuations in the radon content of the incoming gas. The peak at 1730 resulted from a change in both the Gasbuggy and input gas flow rates. The explanation for the variation in grab sample data may be that the sampling point after the second-stage compressor did not deliver representative samples. The excess liquid hydrocarbons at this sample point may also be the cause of the peak at 1530 hours.

Plant Output

Calculated activity output. It is possible to calculate the percentage of average input concentration expected at various times at selected stages of processing. Figure 7 shows the results obtained assuming

Table 7. Activity of plant input gas and average chemical composition calculated from output composition

Component	Composition (mole %)	Tritium in mixture (pCi/cm^3)	Tritium in component (pCi/cm^3)
CH_4	77.4	0.173	0.224
C_2H_6	8.6	0.046	0.535
C_3H_8	6.2	0.010	0.161
C_4H_{10}	2.5	0.010	0.400
C_5H_{12} +	1.20	0.005	0.417
Inert	4.1		
Total	100	0.244	

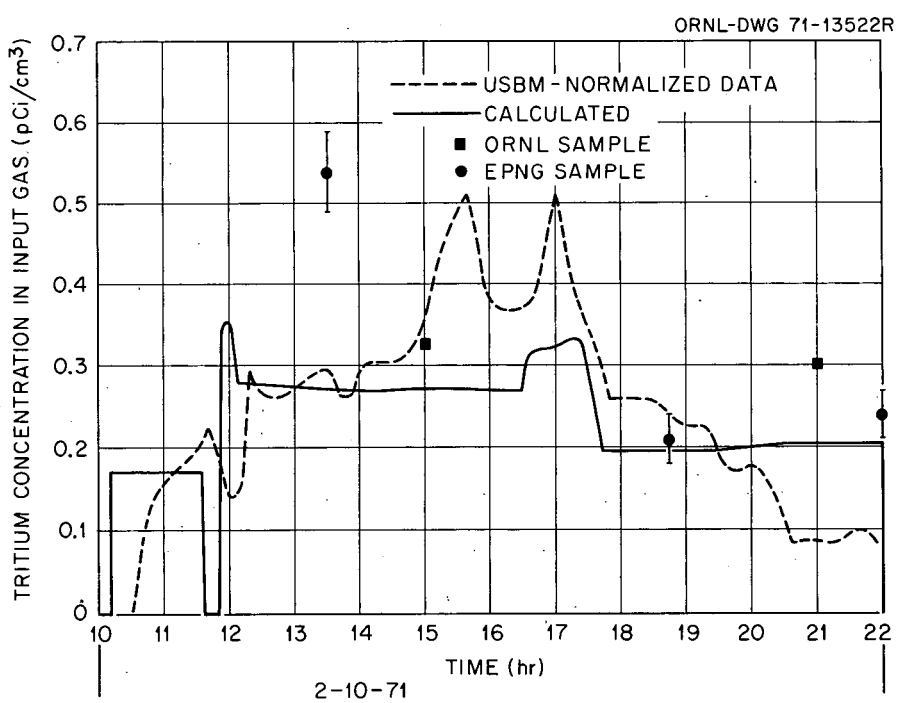

Fig. 6. Measured and calculated input gas concentrations vs time.

ideal mixing, half-full vessels, and no process lag for several of the sampled systems, using the input data shown in Fig. 6. This demonstrates why the activity in the liquid product streams should not increase and decrease rapidly, as did the activity level in the gas streams. This is discussed in some detail in connection with the experimental results.

Product material balance. The plant inlet gas, flowing at a rate of 3.6 $M^2 ft^3$/day with one-half of this total during the 12-hr test, was divided into three product streams. One stream was eventually subdivided into three liquid products.

The three product streams are output gas from the absorber, fuel gas from the reabsorber and absorber, and the liquid products from the final accumulator. Using the average chemical composition determined analytically from samples and the measured 1.8 $M^2 ft^3$/day of fuel gas flow (see Appendix), we can make a material balance of the quantity of gas per day in each stream. Unfortunately, the output gas was not metered, so no cross-check is available. The results are summarized in Tables 8 and 9.

The calculated precision of Table 9 is obviously unwarranted by the uncertainties in our analytical values. The material balance, however, is very good, considering that there were undoubtedly losses in the plant.

We can use data from Table 9 and the values in Table 7 to calculate the theoretical amount of tritium activity in each output stream. This results in a total inventory of 12.46 mCi, as compared with 12.38 mCi in Table 4.

Output gas. A trailer-mounted calibrated on-line tritium and krypton monitor, provided by the El Paso Natural Gas Company, recorded data on activity in the output gas during the test. This equipment was built by the Eberline Instrument Corporation for EPNG, and it was operated by Eberline personnel during the

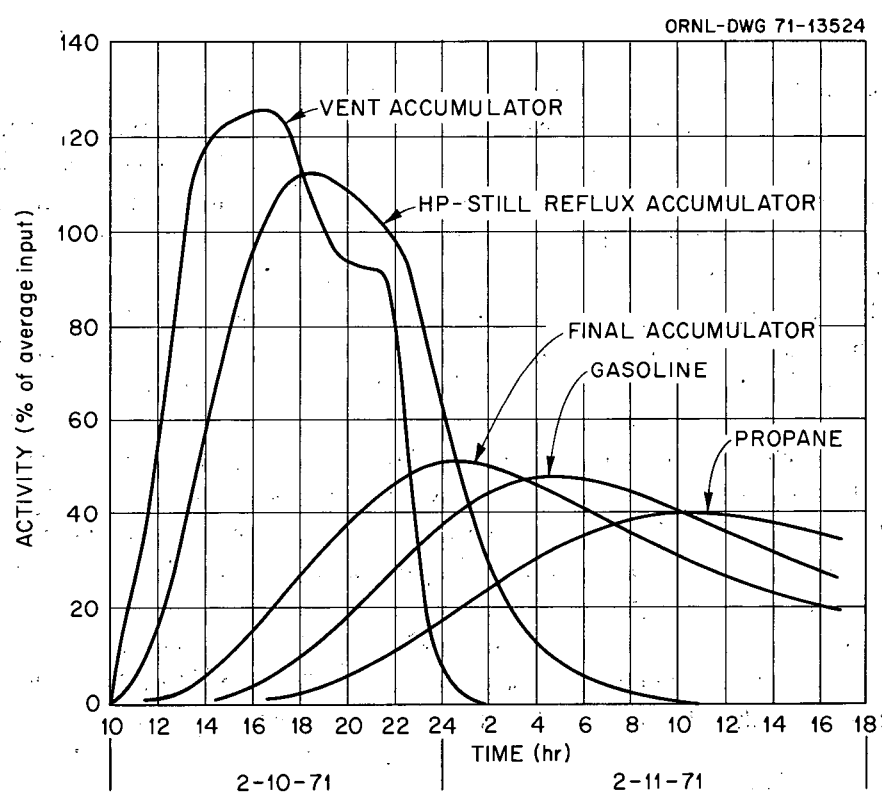

Fig. 7. Calculated activity (percent of average input activity) vs time. Input data from Fig. 6, assuming half-full tanks.

Table 8. Composition of output streams

In mole percent

Component	Fuel gas	Output gas	Final accumulator
$CH_4 + H_2$	81.0	90.0	
C_2H_6	14.1	3.1	3.13
C_3H_8	1.3	0.7	59.29
C_4H_{10}	0.4	0.4	24.06
C_5H_{12} +			13.52
Inert	3.2	5.8	

Table 9. Flow rate of gas components for 3.6 $M^2 ft^3$/day input

In millions of cubic feet per day

Component	Fuel gas	Output gas	Final accumulator	Inlet gas
$CH_4 + H_2$	1.4580	1.332		2.7864
C_2H_6	0.2538	0.0459	0.0100	0.3096
C_3H_8	0.0234	0.0104	0.1895	0.2232
C_4H_{10}	0.0072	0.0059	0.0769	0.0900
C_5H_{12} +			0.0432	0.0432
Inert	0.0576	0.0859		0.1476
Total	1.8000	1.4804	0.3196	3.6000

test. The system includes an internal gas proportional counter and associated electronics, as well as an internal standard.[11] Figure 8 shows a comparison between the on-line data, grab sample data, and input concentrations calculated from Fig. 6. The comparison between the calculated input and measured output concentrations is very good. The grab sample data confirm the general picture but show more scatter than is desirable. More variation in the composition of these samples may be expected than is shown by the monitor, which is by necessity an averaging device with some time lag.

The EPNG monitor registered tritium within 15 min of the start of Gasbuggy gas flow and decreased its reading an order of magnitude within 60 min after trailer gas termination. It has been calculated, using data in Tables 7 and 9, that 4.63 mCi (37% of the total tritium inventory) was in the output gas, which was burned as produced.

The measured levels of ^{85}Kr in the output gas followed the tritium levels very closely, but with an average tritium to ^{85}Kr ratio of 4.75. This compares favorably with the 5.2 ratio in the input gas.

Plant fuel gas. The plant fuel gas is composed of the reabsorber overhead stream, measured as 700 Mft^3/day, plus enough of the absorber overhead stream to furnish the measured 1.8 $M^2 ft^3$/day used as fuel for plant compressors, boilers, and generators.

Two grab samples from the reabsorber were analyzed, and the results are shown in Table 10. The agreement between calculated and observed results is not outstanding. The ^{85}Kr value for the 1300 sample is undoubtedly high, resulting in a tritium value which is too low. The high value for the calculated result is

11. C. R. Bowman, E. W. Chew, and A. E. Doles, "On-Line Monitor for Natural Gas from Nuclear Stimulation," paper presented at the Tritium Symposium, Las Vegas, Nevada, August 30–September 3, 1971.

primarily because of the high ethane fraction. If we consider that a large portion of this ethane returns to the reabsorber from later processing steps where it is effectively diluted, we can see that the low observed value is not out of line.

In order to achieve measurable concentrations of tritium in atmospheric moisture contaminated with the combustion product (HTO) from plant fuel usage, 70 mCi of tritium as HT was added to the mixed fuel gas from 1200 to about 2100 hours (see section on Environmental Measurements). Therefore, no Gasbuggy tritium transfer by this route was measured. The chemical analysis and measured flow rates were used to calculate that 6.64 mCi (about 53% of the tanker tritium inventory), as well as 70 mCi of added HT, entered the local atmosphere as combustion products from plant fuel usage. A grab sample at 2208 confirmed the belief that the added HT had been flushed from the line.

Approximately 90% of the tanker tritium inventory passed rapidly through the plant during the test, with the remaining 10% entering the liquid product stream.

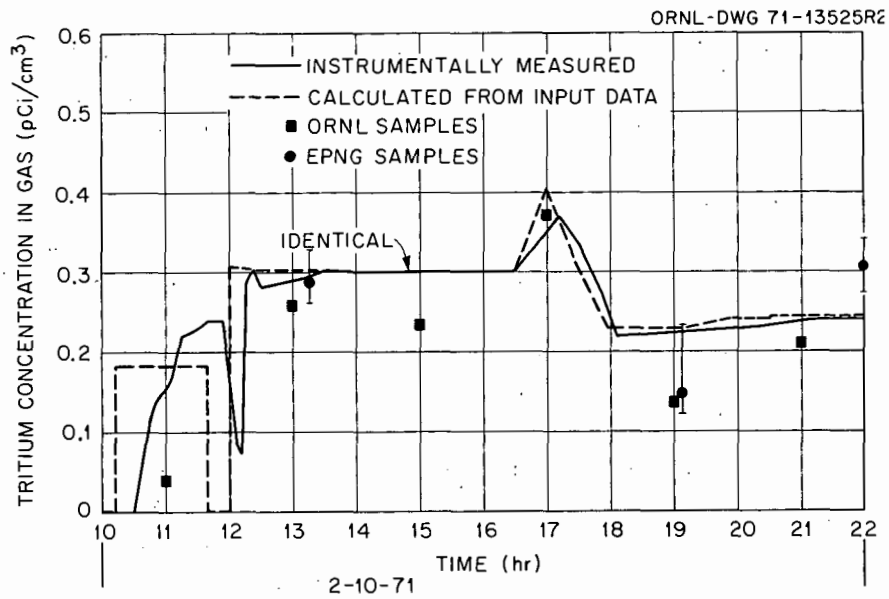

Fig. 8. Tritium concentration in output gas vs time.

Table 10. Reabsorber sample analysis

Component	Composition (vol %)	
	Sample taken at 1300 hours	Sample taken at 2206 hours
$CH_4 + H_2$	63.68+	62.45
C_2H_6	34.1	32.9
C_3H_8	0.60	1.28
C_4H_{10}	0.33	0.39
C_5H_{12} +	0.025	0.029
Gross beta (pCi/cm^3)	0.37 ± 0.04	0.30 ± 0.03
^{85}Kr (pCi/cm^3)	0.14 ± 0.01	0.04 ± 0.01
Net ^{3}H (pCi/cm^3)	0.23 ± 0.03	0.26 ± 0.03
Calculated ^{3}H	0.324	0.316

Liquid Product Separation System

Absorber oil. Except for a small liquid fraction which might be removed at the second-stage separator and be transferred directly to the final accumulator, all of the liquid product is absorbed in, and desorbed from, the absorption oil. If isotopic exchange of tritium in the processed natural gas and hydrogen in the absorber oil hydrocarbons occurs, a substantial amount of tritium would be retained in the lean absorption oil, albeit at levels not substantially greater than those observed in the natural gasoline fraction.

The plant absorber oil, No. 1 diesel, must be replaced at a rate of 0.5 to 1% per day to make up for processing losses, and accounting for these losses could become a nuisance if the tritium concentration was high.

Prior unpublished experiments by W. D. Arnold at ORNL with tritiated methane and ethane saturating kerosene at high pressure for 30 to 60 days indicated that such exchange was not observed under these laboratory conditions.

To confirm these observations under actual process conditions, samples were taken during the test of both rich and lean absorption oil. The results are shown in Table 11.

Only after analysis did we know that the rich oil sampled at the reabsorber still contained tritium activity 10 hr after the Gasbuggy gas input terminated. Most of this activity must have come from the relief streams from the final accumulator, the deethanizer feed tank, and the reflux accumulators in the product separation system. The tritium concentration in vapor from the rich oil samples is about that expected, and the lean oil values confirm that little, if any, tritium exchange occurred between the process gas and the absorption oil. The rich and lean oil values were determined by burning the oil and counting the collected water formed by combustion. In general, we feel that the data are accurate to ±1 pCi per cubic centimeter of water.

Most of the liquid products are removed from the absorber oil in the high-pressure still, with a minor fraction being removed in the low-pressure still. These products and the small fraction from the second-stage gas separator are transferred to the final accumulator through reflux systems.

Activity balance. To simplify our activity balance, it is convenient to define the plant input in terms of the expected average activity for either the total input or any component (100%) times the duration of the input (12 hr). The resulting product, 1200 percent-hours, may be used to assess the reasonableness of sample data from any process tank or stream, since when expressed in the same units the sums of the observed percentages multiplied by the time of observation must equal 1200 percent-hours when summed

Table 11. Tritium content of rich and lean absorption oil

In picocuries per cubic centimeter

Sample time		Tritium concentration		Vapor from rich oil (gross beta)
Date	Hour	Lean oil	Rich oil	
2-10-71	1235		<1.4	0.14
2-10-71	1300	−0.40	1.44	
2-10-71	1700	+0.73		
2-10-71	1855		8.2	0.33
2-10-71	2100		2.27	
2-10-71	2227		2.5	0.30
2-11-71	0800	−0.48	4.6	
2-11-71	1200	−0.63		
2-11-71	1300	−1.13		

over the total time the activity is observed. The notation "percent-hours" is used rather than (percent/hour) × hours to indicate that our data are not complete enough or accurate enough to represent a true integral.

This arithmetical device allows us to normalize any sample to a percentage of the average input concentration, regardless of its composition. The weakness of this technique is the uncertainty in the value of the average pure component values calculated initially. Its strength is the cross-check on total inventory throughput that it gives.

Considerable weight was given to data on samples taken by ORNL and analyzed by its Analytical Chemistry Division, because the technique of oxidizing the liquid samples over copper oxide and determining the tritium in the collected water was used. We believe that this method gives more reliable results than that used by EPNG's contractor on some samples, which consisted in direct counting of the vapor fraction collected above the sample bomb liquid and then correcting to standard temperature and pressure. This technique yields high values for butane because of condensation problems, and it does not provide consistent results for propane. For other samples the composition of the vapor phase is not representative of the liquid phase and can yield spurious results if any HT (with high specific activity) is dissolved in the liquid. The EPNG contractor also analyzed some of the remaining liquid fractions, after volatile evaporation, by combustion and by direct counting. These data are used sparingly.

Data from the EPNG contractor determined by component separation and counting appear reliable within the uncertainties shown and are used where available. The tritium activity of natural gasoline samples was determined directly (without oxidation) and normalized using data from the natural gasoline fractionated from Gasbuggy gas (discussed under Tanker Gas) and the appropriate plant dilution factor. The gasoline sample measured 5.35×10^{-9} Ci/cm^3 of tritium as liquid when analyzed at ORNL; this corresponds to 27.9 pCi/cm^3 converted to vapor, 21% higher than the value used for inventory calculation. Another analysis by EPNG gave 31.5 pCi/cm^3 as vapor.

The corrected value (27.9 pCi/cm^3) is used only in the analysis of the natural gasoline product stream, since all of the mixed product calculations were made prior to the analysis. The small changes it would make in our mixed product analysis do not affect our discussion or conclusions.

For ORNL oxidized samples, the basic conversions used for normalization are shown in Table 12.

These values, together with the chemical analysis of the sample, were used to determine the expected average activity. This and the observed tritium activity of the sample determine the percent of average used in subsequent figures.

The liquid production rate was calculated as ~400 gal/hr during the test period and is assumed to be constant. Over the 24-hr period from 0800 on February 10, to 0800 on February 11, 5166 gal of propane, 2604 gal of butane, and 1884 gal of natural gasoline were extracted from the input gas stream and passed through the liquid products separator system.

Table 12. Conversion of average activity of pure components (as gas at STP) to activity of combustion water

Component	Specific activity of gas (pCi/cm^3)	Volume of gas per unit volume of water	Specific activity of water (pCi/cm^3)
CH_4	0.224	622	139
C_2H_6	0.535	415	222
C_3H_8	0.161	311	50
C_4H_{10}	0.400	249	97
C_5H_{12} +	0.417	192	80

The high-pressure still reflux system. Twelve samples were taken from the reflux accumulator return line to the top of the high-pressure still. The normalized results are plotted in Fig. 9, which shows the variation in activity with time for both the high-pressure still reflux and the final accumulator. The ORNL data appear to follow a regular pattern, largely confirmed by the EPNG results. It is not unlikely that this system (~950 gal) is affected by batch transfer from the reabsorber. The arbitrary curve in Fig. 9 conforms to our initial condition that a material balance requires 1200 percent-hours. Its shape could be varied somewhat without altering the final accumulator curve derived from it.

The final accumulator. All of the liquid product activity must pass through the final accumulator, including any fractions from the low-pressure still and the second-stage gas separator. Early on February 10, we found that, because of the low liquid product rate expected during the test, the plant operating personnel had accumulated 12,250 gal in this tank so they could be sure of separation column feed. The effective dilution of incoming product, which would have resulted in lower tritium values, was minimized by reducing the tank contents to less than 6000 gal by 1530 hours on February 10 by raising the product separation rate. The separations system rate was then reduced to steady-state operation, maintaining 5500 to 6000 gal in the accumulator at a liquid product rate of ~400 gal/hr. The curve for the final accumulator was calculated for these conditions. The ORNL analytical results fit very well except at 1500 hours on February 11. Shortly after 0800 on February 11 the processing plant went to normal input gas flow, and the liquid extraction rate increased. Either an increase in the nontritiated product volume in the accumulator or an increase in the removal rate caused this apparent discrepancy. Shortly after 1000 on February 11, permission was granted plant operators to start sending products to storage for eventual sale. We calculate that at this time 48% of the tritium inventory in the liquid products (about 0.6 mCi of

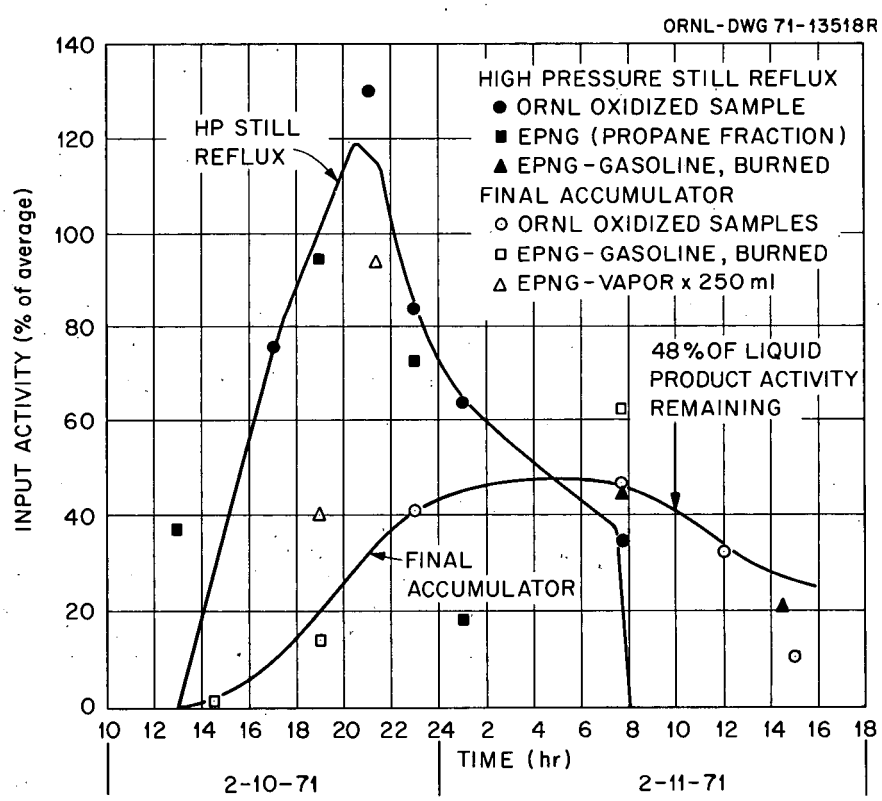

Fig. 9. Variation of activity (percent of input) with time in the high-pressure still reflux and the final accumulator.

Table 13. Comparison of calculated vs measured composition in the final accumulator

Component	Composition (mole %)		
	Measured		Calculated
C_2H_6		5.9	3.1
C_3H_8		56.1	59.3
C_4H_{10} (iso)	7.0	26.0	24.0
C_4H_{10} (normal)	19.0		
C_5H_{12} (iso)	4.1	12.0	13.6
C_5H_{12} (normal)	3.4		
C_6H_{14} (all)	3.3		
C_7H_{16} (all)	1.2		

Table 14. Calculation of liquid volumes from analyses of gas streams

Component	Specific gravity (g/cm^3)	Gallons per thousand cubic feet	Mole fraction	Thousands of cubic feet per day	Liquid volume (gal/day)
C_2H_6	0.374	25.70	1.0	10.0	257
C_3H_8	0.508	27.76	1.0	189.5	5260
C_4H_{10} (iso)	0.563	33.02	0.27	76.9	2457
C_4H_{10} (normal)	0.589	31.56	0.73		
C_5H_{12} (iso)	0.625	36.91	0.34	43.2	1681
C_5H_{12} (normal)	0.634	36.39	0.29		
C_6H_{14} (all)	0.669	41.20	0.27		
C_7H_{16} (all)	0.683	46.92	0.10		
Total					9655

tritium) remained in the final accumulator, distributed in ~5500 gal of liquid. The tritium concentration in the combustion products from this liquid is calculated to be approximately 100 times below the concentration permitted for exposure of the general public under 10 CFR 20.[12]

The above inventory, calculated assuming exponential decay, can be cross-checked using the average value of measured samples taken at 0800 and 1200 on February 11 times the volume of liquid in the tank. This gave an inventory of 0.65 mCi.

Data from three ORNL samples believed to be representative of the final accumulator contents are averaged and compared with the material balance calculation, based on average input, in Table 8. The comparison is shown in Table 13.

Since the calculated value properly applies after the deethanizer, where some ethane is removed, we consider this cross-check very good.

The separated liquid products. In order to analyze the data on the separated liquid product streams, it is necessary to convert from mole percent to volume. This was done as shown in Table 14, assuming ideal solutions.

From 0800 on February 10 to 0800 on February 11, 16,141 of liquid products were measured. We know that the final accumulator initially contained 12,255 gal, which was reduced during the experiment

12. "Standards for Protection against Radiation," Title 10, *Code of Federal Regulations*, Part 20.

to less than 6000 gal. The difference between 16,141 and 9655 (Table 14) (6486 gal) of production can be attributed to the rapid reduction in the liquid volume content of the final accumulator.

This would indicate that at 0800 on February 11 the final accumulator contained 5786 gal, within the expected range of 5500 to 6000 gal.

Using the chemical analysis of the product streams, we can calculate the volume composition, total daily volume, and average flow rate of each product stream as shown in Table 15.

These values and the 1200 percent-hour concept will be used in the discussion of each liquid product stream.

Natural gasoline. In principle, the natural gasoline should be the first stream to show tritium activity, since it is the bottom stream from each separation column and thus is not affected by the effective delay caused by the column reflux accumulators. Process lag may alter this situation, but this is an unknown quantity. The gasoline sample activity was measured directly, with the first sample taken as zero. This analysis uses ORNL sample data, although EPNG samples measured by EPNG personnel are consistent with ORNL results.

Using as the input function the final accumulator data in Fig. 9, the expected curve for the gasoline fraction was derived by assuming that the deethanizer feed tank and the deethanizer reflux tank were about half full and well stirred.

The resulting curve (Fig. 10) actually represents the feed curve to the depropanizer, but the only other mixing systems the gasoline fraction passes through are two low-volume column bottoms, which would have little effect on either the shape or the amplitude of the curve. The ORNL sample results (in picocuries per cubic centimeter of gasoline) were then plotted. It is evident that dividing the data by 111 pCi/cm^3 for average gasoline input concentration and adding 3.5 hr of process lag produces an excellent fit, as shown in Fig. 10. The question is: Is this procedure justifiable?

Calculating the expected activity as liquid (using Table 7) results in a value of 80 pCi/cm^3. A later analysis of separated Gasbuggy gasoline and the appropriate plant dilution factor gave ~100 pCi/cm^3, and when the trailer was steamed out a quantity of liquid hydrocarbons was found which contained 10 times the tritium concentration of Gasbuggy gasoline (50 nCi/cm^3, as compared with 5.35 nCi/cm^3). An average value as high as 111 pCi/cm^3 is probably within the inventory accuracy of the gasoline fraction.

Table 15. Calculated liquid product volumes and flow rates under test conditions

Product	Component	Flow rate		Volume %
		Gallons per day	Gallons per hour	
Propane	C_2H_6	257		
	C_3H_8	4808		
	C_4H_{10}	101		
		5166	215	53.5
Butane	C_3H_8	452		
	C_4H_{10}	2152		
		2604	108	27.0
Gasoline	C_4H_{10}	203		
	$C_5H_{12}^+$	1681		
		1884	78	19.5
Total		9654	401	100

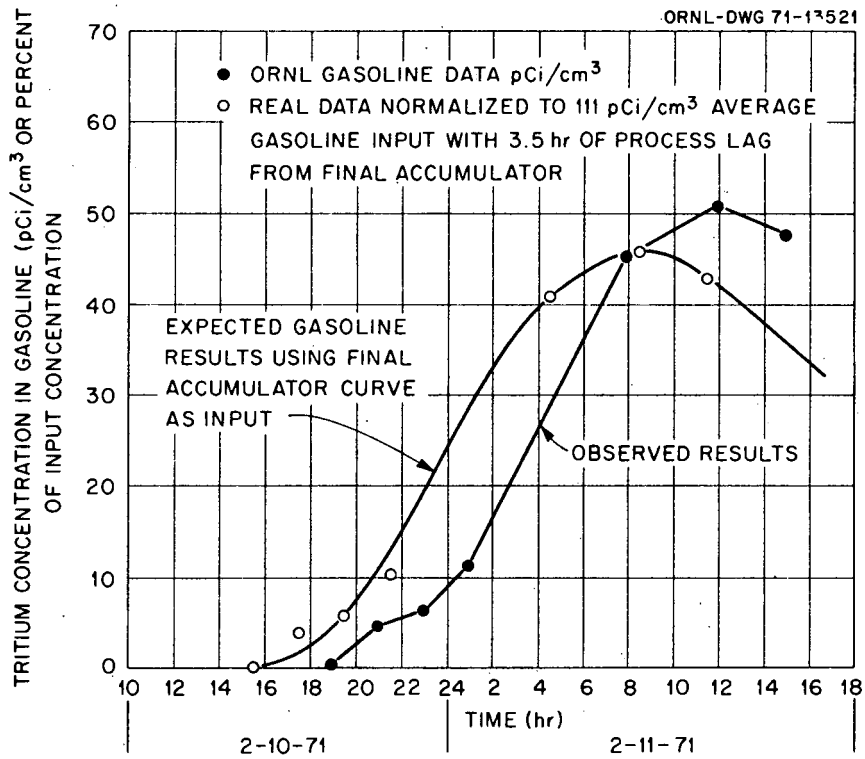

Fig. 10. Observed gasoline activity vs time and a normalized adjustment to the calculated curve.

To account for the process lag, we need a combination of piping and heat exchanger volume of less than 1400 gal between the final accumulator and the depropanizer input or some 275 gal of treater and piping volume after the debutanizer but before our sampling point.

Our contention is that the normalization fit is probably justified.

About 40% of the calculated natural gasoline tritium inventory (0.10 mCi) went to storage for later flaring. The remaining amount (0.15 mCi) went to tank storage for eventual sale.

The concentration by midnight on February 11 was well below 1% of that allowed for public exposure by 10 CFR 20.

Propane product. The percentage of average input calculated for the propane stream is shown in Fig. 11. Unfortunately, most of the ORNL samples were lost due to leaking sample bombs, and the data from the EPNG contractor are not believed to be valid. Data on two ORNL samples and five EPNG samples analyzed at ORNL substantiate the validity of the calculated curve. It appears that about 80% of the activity associated with the propane fraction, about 0.4 mCi, at concentrations below $1/200$ of 10 CFR 20 limits at 1000 on Feburary 11, was transferred to storage for eventual sale. The remaining 20% was flared on the site.

The five EPNG samples were analyzed at ORNL by gas counting techniques. A comparison of these data with values obtained by the EPNG contractor for the same samples is shown in the Appendix.

Butane product. Most of the ORNL butane sample containers leaked. Data reported on EPNG samples by their analytical contractor were anomalously high. Five of these samples were later analyzed at ORNL. The results from two ORNL samples and the five EPNG samples analyzed by ORNL are plotted in Fig. 12.

The high results for some of these samples indicate that tritium contamination of the samples must have occurred.

If the 1200 percent-hour test is made, the results can be shown not to be valid.

The disposition of the tritium activity was therefore calculated on the basis of the theoretical curve.

About 78% of the butane activity (0.38 mCi) was transferred to storage for later sale. The remaining 22% was later burned onsite. The condensed moisture from burning this butane at its maximum tritium level would be about one-tenth of the concentration allowed by 10 CFR 20 for drinking water use by the public. Dilution by later production reduced this concentration rapidly.

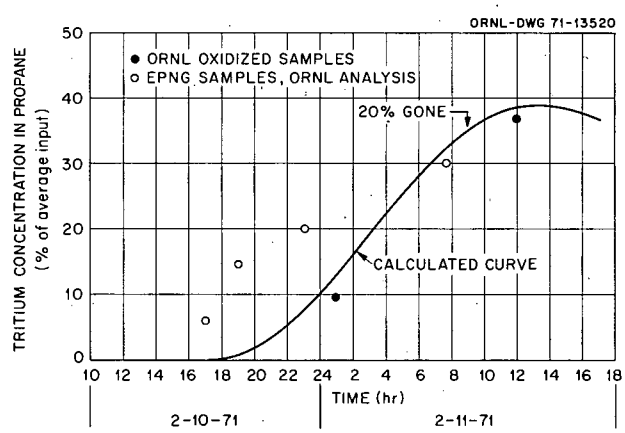

Fig. 11. Calculated tritium concentration in propane vs time compared with normalized experimental data.

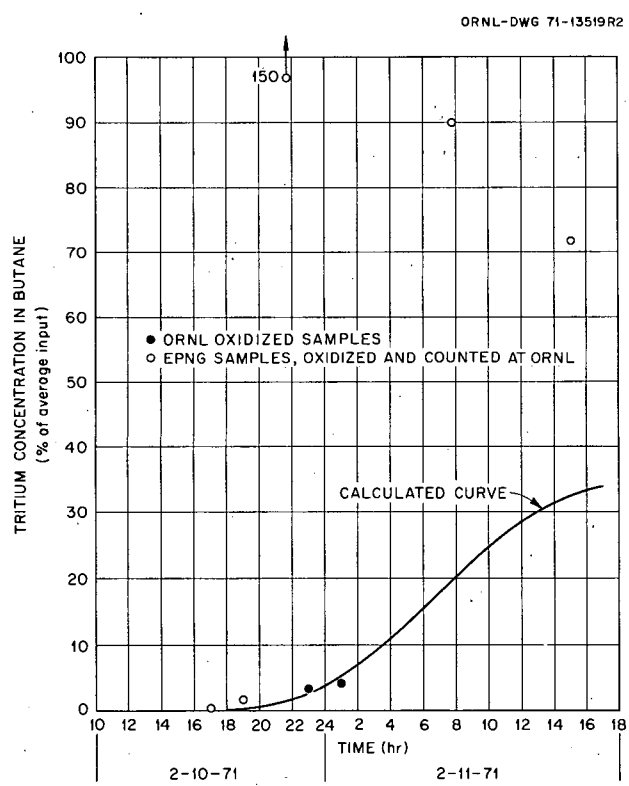

Fig. 12. Calculated tritium concentration in butane vs time compared with normalized experimental data.

Summary – Distribution of Tritium in Plant Products

Analysis of the experimental results shows that the initial tritium inventory of the Gasbuggy gas (Table 4) was dispersed as shown in Table 16.

In addition, 70 mCi of HT was added to the plant fuel gas. All of this was dispersed in combustion effluent from compressors, generators, and boilers as HTO vapor released onsite, during the test.

A total of 0.92 mCi is the maximum amount of tritium which would have left the plant in commercial liquid products.

This was distributed in a minimum of 20,000 gal of liquid at a concentration of less than 12 pCi per milliliter of liquid hydrocarbon. No measurable public exposure could be attributed to the use of these products.

Table 16. Distribution and disposition of tritium from Gasbuggy gas

Product	Total activity (mCi)	Percent of total	Disposition
Output gas	4.63	37.04	Flared on site
Fuel gas	6.64	53.12	Used in plant
Gasoline	0.10	0.80	Burned on site
	0.15	1.20	Commercial sale
Propane	0.10	0.80	Burned on site
	0.39	3.12	Commercial sale
Butane	0.11	0.88	Burned on site
	0.38	3.04	Commercial sale
Total	12.50	100.0	

CONCLUSIONS

The data obtained in this plant test indicate that processing of natural gas containing tritiated hydrocarbons at levels expected to prevail in large-scale exploitation of the nuclear gas-stimulation technique will not present significant radiation exposure problems for plant operating personnel. No evidence of exchange of tritiated hydrocarbons with the plant processing oil was found, and it seems probable that plant operators in any processing plant would receive doses less than 1% of natural background from breathing air containing combustion products resulting from in-plant use of the tritium-contaminated gas as fuel.

The observed distribution of tritium among plant products confirmed theoretical calculations of the relative amounts of tritium in the various separated hydrocarbons, lending confidence in our ability to predict quantities of radioactivity in gas and liquid products leaving a plant that processes gas from nuclearly stimulated wells.

ACKNOWLEDGMENTS

Thanks are due to H. M. Butler and O. M. Sealand, ORNL, who assisted in the performance of the experiment; D. G. Jacobs, ORNL, and P. L. Randolph, EPNG, who helped in the pre-test planning; Jerry Abrams, U.S. Bureau of Mines, Bartlesville, who operated the USBM on-line tritium monitor; A. E. Doles, R. L. Powell, and L. M. Phyfe, Eberline Instrument Corporation, who operated the EPNG on-line monitor; Don Johnson, L. W. Hough, F. S. Sattler, H. L. Kendrick, H. McAnally, and Jim Cronenberg, EPNG, who assisted in the preparation for the test or in its performance; and Carl Mullins, Texas State Health Department, who made observations concerning the radiological safety of the test.

APPENDIX A

Detailed data obtained during the experiment and from extensive postexperiment analyses of samples are presented in this appendix for the benefit of anyone wishing to make an in-depth examination of the experimental results (Tables A-1–A-13). Also included here is a diagram (Fig. A-1) showing the location of desiccant samples (Table A-14) which provided the data shown in Fig. 5.

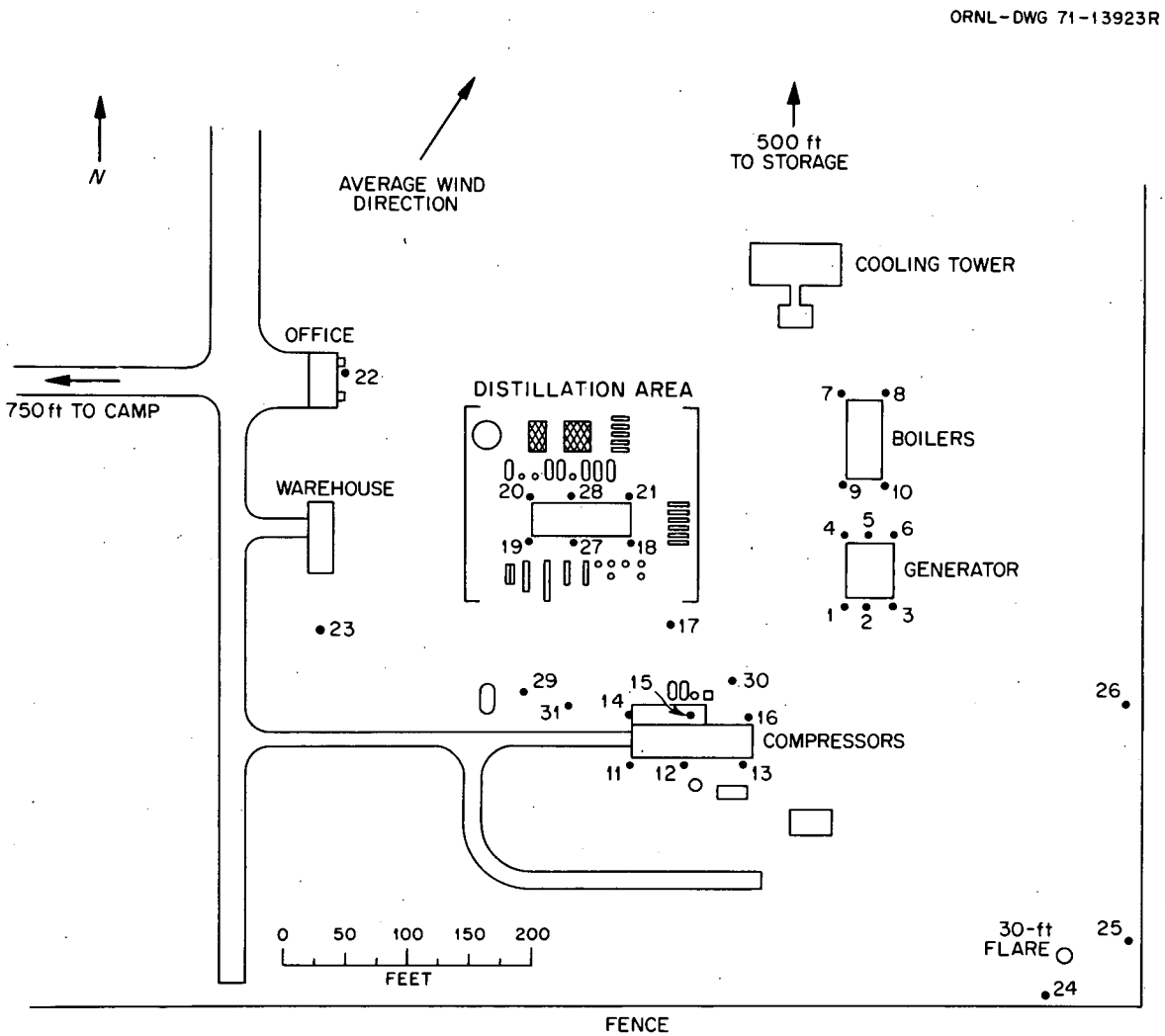

Fig. A-1. Location of atmospheric moisture samplers.

Table A-1. Gasbuggy gas flow data

Time	Flow (ft^3)	Cumulative flow (ft^3)	Flow rate (Mft^3/day)
1010–1135	3423	3,423	58.0
1135–1150	0	3,423	0.0
1150–1205	1259	4,682	120.8
1205–1300	3668	8,350	96.0
1300–1400	3958	12,308	95.0
1400–1500	3926	16,234	94.2
1500–1600	3961	20,195	95.1
1600–1630	1988	22,183	95.4
1630–1700	2033	24,216	97.6
1700–1730	2366	26,582	113.6
1730–1745	971	27,553	93.2
1745–1800	762	28,315	73.1
1800–1900	2933	31,248	70.4
1900–2000	2891	34,139	69.4
2000–2100	2918	37,057	70.0
2100–2200	2943	40,000	70.6

Table A-2. Measured plant gas flow rates

Time	Flow rate (Mft^3/day)				
	Farmer	Sprayberry	Low-pressure absorber	Reabsorber	Fuel
1000–1030	1449	2144	1985	744	1754
1030–1100	1449	2135	2066	734	1751
1100–1130	1485	2153	2148	693	1777
1130–1200	1485	2175	2225	674	1780
1200–1230	1485	2186	2225	712	1805
1230–1300	1503	2216	2225	673	1805
1300–1330	1503	2223	2069	684	1859
1330–1400	1503	2219	2069	663	1859
1400–1430	1521	2223	2151	695	1856
1430–1500	1503	2197	2151	706	1859
1500–1530	1558	2168	2228	747	1848
1530–1600	1594	2190	2230	759	1780
1600–1630	1594	2176	2230	716	1751
1630–1700	1576	1694	2230	809	1754
1700–1730	1558	2102	2944	789	1783
1730–1800	1558	2459	3429	695	1805
1800–1830	1558	2307	3262	643	1816
1830–1900	1558	2283	3262	632	1813
1900–1930	1558	2242	3262	633	1827
1930–2000	1558	2156	3182	673	1799
2000–2030	1540	2205	3106	673	1770
2030–2100	1521	2132	2944	683	1770
2100–2130	1540	2128	2864	703	1773
2130–2200	1521	2157	2867	673	1759
2200–2230	1540	2183	2785	652	1770
2230–2300	1540	2161	2788	703	1773
Average	1529	2177	2574	698	1796

Table A-3. Analysis of mixed plant input gas samples

NR – not run

	Sample 13	Sample 21	Sample 37	Sample A-17	Sample A-2	Sample A-9	Sample A-1
Date	2-10-71	2-10-71	2-10-71	2-11-71	2-11-71	2-11-71	2-11-71
Time of sampling	1331	1847	2202	0800	0900	1500	2100
			Composition (mole %)				
$CH_4 + H_2$	35.42+	61.11+	57.5+	21.0	65.4	65.1	66.1
C_2H_6	7.8	7.3	8.2	7.54	6.88	7.52	5.82
C_3H_8	19.0	12.7	17.5	34.0	17.0	20.8	18.70
C_4H_{10}	27.1	6.0	11.9	31.0	4.9	4.4	6.8
C_5H_{12} +	4.21	1.07	3.2				
Other	6.03	11.07	1.12	NR	NR	NR	NR
			Activity (pCi/cm^3)				
Gross beta	0.57 ± 0.05	0.29 ± 0.03	0.28 ± 0.04				
^{85}Kr	0.086 ± 0.008	0.027 ± 0.003	0.03 ± 0.01				
^{3}H	0.48	0.26	0.25	~0	~0	0.315	0.304
			Component activity (pCi/cm^3)				
C_2H_6							
C_3H_8							
C_4H_{10}							0.40
C_5H_{12} +							1.09

Table A-4. Analysis of reabsorber samples

	Sample 10	Sample 26[a]	Sample 38
Time	1300	1859	2206
		Composition (mole %)	
$CH_4 + H_2$	63.38+		62.45+
C_2H_6	34.1		32.9
C_3H_8	0.60		1.28
C_4H_{10}	0.33		0.39
C_5H_{12} +	0.025		0.029
Other	1.39		2.19
		Activity (pCi/cm^3)	
Gross beta	0.37 ± 0.04		0.30 ± 0.03
^{85}Kr	0.14 ± 0.01		0.04 ± 0.01

[a]Leaked.

Table A-5. Analysis of fuel gas samples

NA – not analyzed

	Sample 11	Sample A-15	Sample 30	Sample 39	Sample A-4	Sample 49	Sample A-20
Date	2-10-71	2-10-71	2-10-71	2-10-71	2-10-71	2-11-71	2-11-71
Time of sampling	1318	1900	1909	2208	2300	0048	0800
			Composition (mole %)				
$CH_4 + H_2$	80.41+	86.0	79.25+	79.52+	86.2	NA	87.2
C_2H_6	14.7	13.6	14.5	14.3	14.7	NA	15.3
C_3H_8	0.33		1.62	2.1		NA	
C_4H_{10}	0.13		0.40	0.83		NA	
C_5H_{12} +	0.01		0.025	0.03		NA	
Other	3.83		3.59	3.01		NA	
			Activity (pCi/cm^3)				
Gross beta	6.1 ± 0.2		5.9 ± 0.2	0.29 ± 0.04		≤0.06	
^{85}Kr	0.06 ± 0.01		0.04 ± 0.01	0.023 ± 0.004		≤0.01	
^{3}H	6.0	5.60	5.9	0.27	0.125		0.28

Table A-6. Analysis of output gas samples

	Sample A-6	Sample A-13	Sample 12	Sample A-8	Sample A-11	Sample A-12	Sample 29	Sample A-14	Sample 40	Sample A-3	Sample 48	Sample A-5	Sample A-16
Date	2-10-71	2-10-71	2-10-71	2-10-71	2-10-71	2-10-71	2-10-71	2-10-71	2-10-71	2-10-71	2-11-71	2-11-71	2-11-71
Time of sampling	1100	1300	1324	1500	1700	1900	1900	2100	2210	2300	0051	0100	0800
Composition (mole %)													
$CH_4 + H_2$	98.1	97.3	90.35+	89.9	97.1	96.0	87.34+	97.1	89.26+	98.1		96.5	88.2
C_2H_6	2.8	3.13	2.9	2.63	3.33	3.55	4.1	3.27	3.4	3.62		3.56	2.14
C_3H_8	<0.1	<0.1	0.63	<0.1	<0.1	<0.1	0.63	<0.1	0.82	<0.1		<0.1	<0.1
C_4H_{10}			0.23				0.16		0.53				
C_5H_{12} +			0.06				0.03		0.12				
Others			5.38				6.88		5.21				
Mixture activity (pCi/cm^3)													
Gross beta									0.33 ± 0.03		<0.03		
^{85}Kr			≤0.018				0.05 ± 0.01		0.023 ± 0.004		≤0.02		
^3H	0.041	0.258		0.232	0.372	0.136		0.210		0		0.01	0.10
Component activity (pCi/cm^3)													
CH_4			0.21 ± 0.02				0.13 ± 0.01						
C_2H_6			0.015 ± 0.002				0.01 ± 0.002						
C_3H_8			0.0027 ± 0.003				≤0.003						
HT			0.067 ± 0.01				≤0.077						
Total ^3H			0.295				≤0.220		0.31				

Table A-7. Analysis of high-pressure still reflux accumulator samples

NA – not analyzed

	Sample 7	Sample B-15	Sample 27	Sample B-17	Sample 33	Sample B-18	Sample 45	Sample B-20	Sample 50	Sample 53	Sample B-25	Sample 57
Date	2-10-71	2-10-71	2-10-71	2-10-71	2-10-71	2-10-71	2-10-71	2-11-71	2-11-71	2-11-71	2-11-71	2-11-71
Time of sampling	1240	1700	1901	2100	2120	2300	2306	0100	0100	0745	0800	1431
Gas phase composition (mole %)												
$CH_4 + H_2$	5.4		7.6		NA		7.7		3.92	NA		NA
C_2H_6	2.7		15.4				15.1	4.93	4.1		0.65	
C_3H_8	45+	2.85	61+	16.09		4.53	61+	48.75	47+		40.02	
C_4H_{10}	38.7	21.34	14.0	29.69		26.12	13.9	24.64	35.7		30.69	
C_5H_{12} +	7.0	75.83	1.75	57.23		69.34	2.04	21.67	7.9		28.64	
Other	0.44	NA	0.12	NA		NA	0.23	NA	0.80		NA	
Gas phase activity (pCi/cm^3)												
Gross beta	NR	NR	NR	NR	0.23	NR	NR	NR	NR	0.17	NR	0.10
^{85}Kr	NR	NR	NR	NR	NR	NR	NR	NR	NR	NR	NR	NR
^3H	NR	62.3	NR	110 ± 10	NR	70	NR	49.3	NR	NR	25.89	NR
Component activity (pCi per cubic centimeter of gas)												
C_2H_6	≤0.009		0.045 ± 0.015				0.023 ± 0.009		≤0.009			
C_3H_8	0.027 ± 0.004		0.059				0.072 ± 0.01		0.022 ± 0.004			
C_4H_{10}	0.09 ± 0.01		≤0.036				≤0.018		0.022 ± 0.004			
C_5H_{12}	0.045 ± 0.007		≤0.022				≤0.009		≤0.013			
Composition of liquid phase remaining after vapor flashing												
Weight %												
C_5H_{12}	NA	NA	NA	NA	60	NA	NA	NA	NA	33	NA	33
C_6H_{14}					29.5					53		36.5
C_7H_{16}					9.7					12		17
C_8H_{18}					0.6					1.6		5.3
C_9H_{20}					0.1					0.3		0.5
$C_{10}H_{22}$					<0.1					0.1		3.0
Picocuries of ^3H per cubic centimeter of liquid					94					46		21

Table A-8. Specific activity of high-pressure still and reflux accumulator samples[a]

	Sample 7	Sample 27	Sample 45	Sample 50
Date	2-10-71	2-10-71	2-10-71	2-11-71
Time of sampling	1240	1901	2306	0100
Component				
C_2H_6				
Picocuries per cubic centimeter of vapor	<0.35	0.29 ± 0.03	0.14 ± 0.02	<0.18
Picocuries per cubic centimeter of combustion water[b]	<145	120	58	75
Percent of average[b]		54	26	
C_3H_8				
Picocuries per cubic centimeter of vapor	0.054 ± 0.005	0.094 ± 0.02	0.12 ± 0.02	0.05 ± 0.01
Picocuries per cubic centimeter of combustion water[b]	17	29	37	16
Percent of average[b]	34	58	74	32
C_4H_{10}				
Picocuries per cubic centimeter of vapor	0.23 ± 0.03	<0.24	≤0.12	0.1 ± 0.03
Picocuries per cubic centimeter of combustion water[b]	57	60	30	25
Percent of average[b]	59			26
C_5H_{12} +				
Picocuries per cubic centimeter of vapor	0.65 ± 0.06	1.3	<0.41	<0.15
Picocuries per cubic centimeter of combustion water[b]	124	<21	<78	<27
Percent of average[b]	155			

[a]Average by EPNG contractor.
[b]Calculated values.

Table A-9. Analysis of final accumulator samples

NA – not analyzed; NR – not run

	Sample 14	Sample 28	Sample 43	Sample B-11	Sample B-27[a]	Sample 54	Sample B-34	Sample B-31	Sample B-29
Date	2-10-71	2-10-71	2-10-71	2-10-71	2-11-71	2-11-71	2-11-72	2-11-71	2-11-71
Time of sampling	1425	1904	2224	2300	0100	0745	0800	1200	1500
Composition of total sample (mole %)									
$CH_4 + H_2$	NA	NA	NA			NA			
C_2H_6				7.10				5.91	4.76
C_3H_8				55.52			14.57	59.37	53.56
C_4H_{10}				26.13			37.99	23.16	28.60
C_5H_{12} +				11.26			47.44	11.54	13.07
Vapor activity (pCi/cm^3)									
Gross beta[b]	≤0.032	0.16	1.0	NR		0.19	NR	NR	NR
^{85}Kr	NR	NR	NR	NR		NR	NR	NR	NR
^3H[c]	NR	NR	NR	32.17		NR	39.0	24.37	8.06
Composition of liquid phase remaining after vapor flashing									
Weight %									
C_5H_{12}	25	12.6	49.7			35.9			
C_6H_{14}	59	59.0	40.5			51.0			
C_7H_{16}	12.5	19.0	7.2			10.8			
C_8H_{18}	2.7	7.0	1.6			1.5			
C_9H_{20}	0.7	1.9	0.1			0.4			
$C_{10}H_{22}$	0.1	0.4	0.8			0.1			
Picocuries of ^3H per cubic centimeter of liquid hydrocarbon	<1.5	14	950			62			

[a]Leaked.
[b]Vapor over liquid phase.
[c]Combustion water.

Table A-10. Analysis of propane samples

NA – not analyzed

	Sample B-10[a]	Sample 9	Sample B-6[a]	Sample B-5[a]	Sample 17[a]	Sample 24	Sample B-9[a]	Sample B-14[a]	Sample 34	Sample B-21[a]	Sample 47	Sample B-26	Sample 56	Sample B-32[a]	Sample B-33	Sample 59
Date	2-10-71	2-10-71	2-10-71	2-10-71	2-10-71	2-10-71	2-10-71	2-10-71	2-10-71	2-10-71	2-10-71	2-11-71	2-11-71	2-11-71	2-11-71	2-11-71
Time of sampling	1100	1248	1300	1500	1700	1855	1900	2100	2123	2300	2311	0100	0748	0800	1200	1436
							Composition (mole %)									
$CH_4 + H_2$		0.77				2.1			NA		1.15		NA			NA
C_2H_6		2.4				5.5			NA		2.5	3.20	NA		1.65	NA
C_3H_8		76+				89+			NA		92+	90.8	NA		94.0	NA
C_4H_{10}		2.3				2.8			NA		3.6	5.98	NA		4.45	NA
C_5H_{12} +		0.035				0.057			NA		0.06		NA			NA
Other		18.42[b]				0.40			NA		0.10	NA	NA		NA	NA
							Activity (pCi/cm^3)									
Gross beta[c]		0.17 ± 0.04				0.009[d]			0.15 ± 0.06		⩽0.07		0.17 ± 0.04			⩽0.09
						⩽0.06										
^{85}Kr		NA				NA			NA		NA		NA			NA
^{3}H[f]					2.8	6.8					9.64	4.8	14.6		18.4	
						(0.022)[c,d]			(0.11)[c,d,e]		(0.031)[c,d]		(0.047)[c,d]			

[a]Leaked.
[b]Air.
[c]Per cubic centimeter of propane gas.
[d]ORNL analysis.
[e]Contaminated with Gasbuggy gas.
[f]Per cubic centimeter of combustion water (311 cm^3 of propane gas = 1 cm^3 of combustion water).

Table A-11. Analysis of butane samples

NA – not analyzed

	Sample B-8	Sample 8	Sample B-2[a]	Sample B-3	Sample 16	Sample 23	Sample B-19[a]	Sample B-12[a]	Sample 35	Sample B-16	Sample 46	Sample B-22	Sample 55	Sample B-23[a]	Sample B-35[a]	Sample 58
Date	2-10-71	2-10-71	2-10-71	2-10-71	2-10-71	2-10-71	2-10-71	2-10-71	2-10-71	2-10-71	2-10-71	2-11-71	2-11-71	2-11-71	2-11-71	2-11-71
Time of sampling	1100	1245	1300	1500	1700	1850	1900	2100	2125	2300	2309	0100	0746	0800	1200	1436
Composition (mole %)																
$CH_4 + H_2$		2.73				3.61					2.26					
C_2H_6		0.19				0.09					1.24					
C_3H_8	10.3	7.4		1.91		19.2				8.86	25.7	7.02				
C_4H_{10}	89.7	88+		98.1		76+				91.3	70+	93.1				
C_5H_{12} +		1.18				0.15					0.5					
Other	NA	0.07		NA		0.22			NA	NA	0.13	NA	NA			
Activity (pCi/cm^3)																
Gross beta[b]		0.91 ± 0.09									2.70 ± 0.2					
^{85}Kr		NA			NA	NA			NA		NA		NA			NA
^{3}H[c]	−0.3			3.7	0.0017[b]	0.0072[b]			0.60[b]	4.1		3.4	0.35 ± 0.06[b]			0.29 ± 0.05[b]

[a]Leaked.
[b]Per cubic centimeter of butane vapor.
[c]Per cubic centimeter of combustion water (249 cm^3 of butane vapor = 1 cm^3 of combustion water).

Table A-12. Analysis of natural gasoline samples

NA – not analyzed

	Sample G-1	Sample G-6	Sample G-9	Sample G-14	Sample G-24	Sample 31	Sample G-13	Sample G-8	Sample G-2	Sample G-12	Sample G-11	Sample G-19
ORNL samples												
Date	2-10-71	2-10-71	2-10-71	2-10-71	2-10-71	2-10-71	2-10-71	2-10-71	2-11-71	2-11-71	2-11-71	2-11-71
Time	1100	1300	1500	1700	1900	1925	2100	2300	0100	0800	1200	1500
Analysis, mole %												
$CH_4 + H_2$	NA	NA	NA	NA	NA	6.35	NA	NA	NA		NA	
C_2H_6	NA	NA	NA	NA	NA	0.43	NA	NA	NA		NA	
C_3H_8	NA	NA	NA	NA	NA	2.04	NA	NA	NA		NA	
C_4H_{10}	NA	NA	NA	NA	NA	45.4	NA	NA	NA	7.62	NA	9.48
C_5H_{12} +	NA	NA	NA	NA	NA	45.4	NA	NA	NA	92.37	NA	90.52
Other	NA	NA	NA	NA	NA	0.26	NA	NA	NA	NA	NA	NA
Activity												
Gross beta, pCi per cubic centimeter of vapor						<0.19[a]						
^{85}Kr, pCi per cubic centimeter of vapor												
^{3}H, pCi per cubic centimeter of liquid hydrocarbon	Taken as 0	0.1	0.7	0.2	0.3		4.5	6.2	11.4	45.6	50.8	47.6
EPNG samples run by EPNG												
Date	2-8-71	2-10-71	2-10-71	2-10-71	2-10-71	2-10-71	2-10-71	2-11-71	2-11-71	2-11-71		
Time	2330	1309	1720	1915	1925	2139	2322	0100	0757	1523		
^{3}H, pCi per cubic centimeter of liquid hydrocarbon	6.3	2.7	1.6	3.3	1.3	6.7	6.8	12.6	61.1	56.5		

[a]Vapor over liquid.

Table A-13. Weather data, February 10, 1971

Wind from the south and southwest, 15–30 mph estimated, and very gusty

Time	Temperature (°F)		Relative humidity (%)	H_2O (g/m^3)
	Dry bulb	wet bulb		
1045	50	38	27	2.5
1130	55	42	30	3.4
1450	64	45	17	2.6
1715	64	45	17	2.6
2400[a]	47.5	41.5	60	5.1

[a]The values at 2400 hours was weighted to give an average value of 3.0 ml/m^3 for average atmospheric moisture during the test period, ~1000 to 2200.

Table A-14. Data and calculations for desiccant environmental samples

Sample No.	Hours exposed	Hours ^3H exposed	Correction factor	Picocuries per cubic centimeter of H_2O	Net pCi/m^3 average
1	12.12	9.00	1.35	32.3	131
2	12.08	9.00	1.34	16.0	64
3	12.02	9.00	1.34	17.5	70
4	12.00	9.00	1.33	24.0	96
5	11.97	9.00	1.33	21.9	87
6	11.92	9.00	1.32	25.0	99
7	11.90	9.00	1.32	14.7	58
8	11.87	9.00	1.32	17.4	69
9	11.68	9.00	1.30	18.1	71
10	11.58	9.00	1.29	14.8	57
11	12.07	9.00	1.34	3.7	15
12	12.14	9.00	1.35	2.5	10
13	11.72	9.00	1.30	2.7	11
14	11.52	9.00	1.28	2.2	8
15	11.52	9.00	1.28	7.3	28
16	11.48	9.00	1.28	17.0	65
17	11.02	9.00	1.22	13.2	48
18	11.07	9.00	1.23	13.4	49
19	10.97	9.00	1.22	7.7	28
20	10.87	9.00	1.21	3.2	12
21	10.78	9.00	1.20	10.0	36
22	11.18	9.00	1.24	1.1	4
23	11.13	9.00	1.24	0.4	1
24	11.05	9.00	1.23	2.7	10
25	11.02	9.00	1.22	1.6	6
26	11.02	9.00	1.22	1.6	6
27	10.15	9.00	1.13	12.2	41
28	10.00	9.00	1.11	10.0	33
29	10.07	9.00	1.12	0.4	1
30	9.92	9.00	1.10	17.2	57
31	9.90	9.00	1.10	3.8	13

NOTE: Location shown in Fig. A-1. Net pCi/m^3 = correction factor × [$pCi/(cm^3$ of H_2O)] × 3 cm^3/m^3 average atmospheric moisture.

INTERNAL DISTRIBUTION

1. H. H. Abee
2. W. D. Arnold
3–4. S. I. Auerbach
5. J. A. Auxier
6. F. T. Binford
7. R. D. Birkhoff
8–31. C. J. Barton
32. E. G. Bohlmann
33. K. B. Brown
34. H. M. Butler
35. K. E. Cowser
36. D. J. Crouse
37. F. L. Culler
38. D. E. Ferguson
39. B. R. Fish
40. M. R. Ford
41. W. R. Grimes
42. R. F. Hibbs
43. S. V. Kaye
44–48. M. J. Kelly
49. J. L. Liverman
50–54. A. S. Meyer
55. R. E. Moore
56. K. Z. Morgan
57. D. J. Nelson
58. J. S. Olson
59. R. V. O'Neill
60. R. B. Parker
61. P. S. Rohwer
62. O. M. Sealand
63. M. J. Skinner
64. W. S. Snyder
65–82. E. G. Struxness
83. W. A. Thomas
84. W. D. Turner
85. A. D. Warden
86. A. M. Weinberg
87. J. E. Cantlon (consultant)
88. J. C. Frye (consultant)
89. J. B. Hursh (consultant)
90. Edward Gerjuoy (consultant)
91. H. O. Wyckoff (consultant)
92–93. Biology Library
94–96. Central Research Library
97. ORNL-Y-12 Technical Library Document Reference Section
98–132. Laboratory Records Department
133. Laboratory Records, ORNL R.C.

EXTERNAL DISTRIBUTION

134. Charles Atkinson, U.S. Bureau of Mines, Bartlesville Petroleum Research Center, Bartlesville, Oklahoma 74004.
135. Jerry Abrams, U.S. Bureau of Mines, Bartlesville Petroleum Research Center, Bartlesville, Oklahoma 74004.
136. Martin B. Biles, Director, Division of Operational Safety, U.S. Atomic Energy Commission, Washington, D.C. 20545.
137–145. C. R. Bowman, El Paso Natural Gas Company, P.O. Box 1492, El Paso, Texas 79999.
146. Carter D. Broyles, Department Manager, Test Sciences (7110), Sandia Corporation, P.O. Box 5800, Albuquerque, N.M. 87115.
147. M. W. Carter, Western Environmental Research Laboratory, EPA, P. O. Box 15027, Las Vegas, Nevada 89114.
148. Robert J. Catlin, Director, Division of Environmental Affairs, U.S. Atomic Energy Commission, Washington, D. C. 20545.
149. C. D. Catt, El Paso, Texas 79999.
150–154. E. W. Chew, El Paso Natural Gas Company, P.O. Box 1492, El Paso, Texas 79999.
155. George W. Cowan, Los Alamos Scientific Laboratory, P.O. Box 1663, Los Alamos, N.M. 87544.
156. Richard Cunningham, Division of Materials Licensing, U.S. Atomic Energy Commission, Bathesda, Maryland 20014.

157. G. M. Dunning, Division of Environmental Affairs, U.S. Atomic Energy Commission, Washington, D.C. 20545.
158–160. A. E. Doles, Eberline Instrument Corporation, P.O. Box 2108, Santa Fe, N.M. 87501.
161. Harold J. Groh, Jr., Separations Chemistry, Savannah River Laboratory, E. I. du Pont de Nemours and Company, P.O. Box "A", Aiken, S.C. 29802.
162. William R. Hardwick, U.S. Bureau of Mines, Eight West Paseo Redondo, Tuscon, Arizona 85705.
163. D. G. Jacobs, Division of Health, Safety, and Waste Management, International Atomic Energy Agency, Kaerntnerring 11, A-1010, Vienna, Austria.
164. W. M. Culkowski, NOAA, AEC Federal Building, Oak Ridge, Tenn. 37830.
165. S. R. Hanna, NOAA, AEC Federal Building, Oak Ridge, Tenn. 37830.
166. J. W. Healy, Health Physics Division, Los Alamos Scientific Laboratory, Box 1663, Los Alamos, N.M. 87544.
167. Don Hendricks, Nevada Operations Office, U.S. Atomic Energy Commission, P.O. Box 1676, Las Vegas, Nevada 89101.
168. John Heslep, Chief, Environmental Safety and Consumer Protection Program, State Department of Public Health, 2151 Berkeley Way, Berkeley, Calif. 94704.
169–170. Gary H. Higgins, K. Division, Lawrence Livermore Laboratory, P.O. Box 808 (L-41), Livermore, Calif. 94551.
171. George Hinman, Gulf General Atomic, Box 608, San Diego, Calif. 92112.
172. I. A. Hobbs, Director, Technical and Production Division, Savannah River Operations Office, P.O. Box "A", Aiken, S.C. 29802.
173. F. A. Gifford, Jr., NOAA, AEC Federal Building, Oak Ridge, Tenn. 37830.
174–198. John S. Kelly, Assistant Director, Division of Applied Technology, U.S. Atomic Energy Commission, Washington, D.C. 20545.
199. Paul Kruger, Associate Professor of Nuclear Chemistry, Department of Civil Engineering, Stanford, California.
200. Dwight Lemmon, Assistant Chief Geologist for Economic Geology, U.S. Geological Survey, Dept. of the Interior, Washington, D.C. 20240.
201. Dan Marostica, Pacific Lighting Service Company, 720 West Eighth Street, Los Angeles, California 90017.
202. J. A. McBride, Director, Materials Licensing, U.S. Atomic Energy Commission, Bethesda, Maryland 20014.
203. M. L. Merritt, Underground Physics Division (5232), Sandia Corp., Albuquerque, N.M. 87115.
204. R. E. Miller, Manager, Nevada Operations Office, U.S. Atomic Energy Commission, P.O. Box 1676, Las Vegas, Nevada 99101.
205. R. H. Mote, Physical Science Administrator, Office of Assistant Director – Planning, U.S. Bureau of Mines, Dept. of Interior, Washington, D.C. 20240.
206. Carl Mullins, Texas State Health Department, Austin, Texas 78712.
207. Brig. Gen. Richard H. Groves, Deputy Director of Civil Works for Comprehensive Planning, Office of the Chief of Engineers, Dept. of the Army, Room 2339, Bldg. T-7, (Gravelly Point), Washington, D.C. 20315.
208. Director, Explosive Excavation Research Office, Corps of Engineers, Lawrence Livermore Laboratory, P.O. Box 808 (L-396), Livermore, Calif. 94551.
209. William Ogle, Los Alamos Scientific Laboratory, P.O. Box 1663, Los Alamos, N.M. 87544.
210. C. C. Palmiter, Office of Radiation Programs, Environmental Protection Agency, Rockville, Md.
211. F. J. Parsons, Pacific Gas and Electric Company, 245 Market St., San Francisco, Calif. 94106.
212. E. R. Price, Director, Division of State and Licensee Relations, U.S. Atomic Energy Commission, Bethesda, Md. 20014.
213. L. M. Muntzing, Director of Regulations, U.S. Atomic Energy Commission, Bethesda, Md. 20014.
214. J. Ramsey, U.S. Bureau of Mines, Washington, D.C. 20240.
215. P. L. Randolph, El Paso Natural Gas Company, P.O. Box 1492, El Paso, Texas 79999.
216. Lester R. Rogers, Director, Division of Radiological and Environmental Protection, U.S. Atomic Energy Commission, Bethesda, Md. 20014.

217. Paul Russell, Research Director, Denver Mining Research Center, U.S. Bureau of Mines, Denver Federal Bldg., Denver, Colorado 80225.
218. Lewis M. Schalit, Systems, Science and Software, P.O. Box 1620, La Jolla, Calif. 92037.
219. Clifford S. Selvage, Manager, Advance Systems Research Department 1, Sandia Corporation, P.O. Box 969, Livermore, Calif. 94550.
220. Harold Sohns, U.S. Bureau of Mines, Laramie Petroleum Center, Laramie, Wyoming 82071.
221. R. H. Thalgott, Test Manager, Nevada Operations Office, U.S. Atomic Energy Commission, P.O. Box 1676, Las Vegas, Nevada 89101.
222. Donald Gilbert, Director, Arizona Atomic Energy Commission, 40 East Thomas Road, Suite 107, Phoenix, Arizona 85102.
223. William S. Twenhofel, U.S. Geological Survey, Federal Center, Denver, Colorado 80225.
224. B. H. Van Domelen, Governor's Science Adviser, Sandia Laboratory 1820, Albuquerque, N.M. 87115.
225. J. Wade Watkins, Chief, Division of Petroleum and Natural Gas, U.S. Bureau of Mines, Dept. of the Interior, Washington, D.C. 20240.
226. Glenn C. Werth, Associate Director of Plowshare, Lawrence Livermore Laboratory, P.O. Box 808, (L-13), Livermore, Calif. 94551.
227. Ronall A. Siddons, United Kingdom Atomic Energy Authority, Weapons Research Establishment, Berkshire, England.
228. C. F. Smith, Jr., Lawrence Livermore Laboratory, P.O. Box 808, Livermore, Calif. 94551.
229. Miles Reynolds, Austral Oil Company, 2700 Humble Bldg., Houston, Texas 77002.
230. Sam Ross, Public Service Company of Colorado, Denver, Colorado 80220.
231. John Hassoldt, Public Service Company of Colorado, Denver, Colorado 80220.
232. John Reed, Rocky Mountain National Gas Company, P.O. Box 700, Glenwood Springs, Colorado 81601.
233. Fred P. Wehrle, Colorado Interstate Gas Company, P.O. Box 1087, Colorado Springs, Colorado 80901.
234. Howard Tewes, Lawrence Livermore Laboratory, P.O. Box 808, Livermore, Calif. 94551.
235. G. W. Frank, Austral Oil Co., 2700 Humble Bldg., Houston, Texas 77002.
236. Howard Frederickson, Colorado Interstate Gas Co., Colorado Springs, Colorado 80901.
237. G. Edwin Brown, Jr., Management Consultant, P.O. Box 253, New Canaan, Conn. 06840.
238. Abraham S. Goldin, Kresge Center for Environmental Health, Harvard University, School of Public Health, Boston, Mass. 02100.
239. Warren Donnelly, Library of Congress, Legislative Reference Service, Washington, D.C. 20504.
240. P. W. Jacoe, Colorado Dept. of Health, 4210 East 11th Ave., Denver, Colorado 80220.
241. James E. Sohngen, Atomic Industrial Forum, Inc., 475 Park Ave., So., New York, N.Y. 10016.
242. Andre Bouville, United Nations, Scientific Committee on the Effects of Atomic Radiation, New York, N.Y. 10016.
243. Paul J. Cory, Office of the Secretary of Transportation, Washington, D.C. 20590.
244. James Yates Pauling, President, Anistics, Inc., 260 Madison Ave., New York, N.Y. 10016.
245. Research and Technical Support Division, AEC, ORO
246. Patent Office, AEC, ORO
247. G. W. Johnson, Director, Division of Applied Technology, U.S. Atomic Energy Commission, Washington, D.C. 20545.
248. Jacob Kastner, Division of Radiological and Environmental Protection, U.S. Atomic Energy Commission, Bethesda, Md. 20014.
249. Don Johnson, Superintendent, Barnhart Gasoline Plant, Big Analee, Texas.
250. Jim Cronenburg, El Paso Natural Gas Company, Permian Division, Midland, Texas.

251–584. Given distribution as shown in TID-4500 under Health and Safety category and to recipients listed in UC-35 who did not receive copies under UC-41 (25 copies – NTIS).