LOCKHEED MARTIN ENERGY RESEARCH LIBRARIES

3 4456 0515437 4

ORNL-4819

cy. 1

A REVIEW OF ALPHA RADIATION SOURCE PREPARATION METHODS AND APPLICATIONS

R. E. Greene
R. S. Pressly
F. N. Case

OAK RIDGE NATIONAL LABORATORY
CENTRAL RESEARCH LIBRARY
DOCUMENT COLLECTION
LIBRARY LOAN COPY
DO NOT TRANSFER TO ANOTHER PERSON
If you wish someone else to see this document, send in name with document and the library will arrange a loan.

OAK RIDGE NATIONAL LABORATORY
OPERATED BY UNION CARBIDE CORPORATION • FOR THE U.S. ATOMIC ENERGY COMMISSION

Printed in the United States of America. Available from
National Technical Information Service
U.S. Department of Commerce
5285 Port Royal Road, Springfield, Virginia 22151
Price: Printed Copy $3.00; Microfiche $0.95

This report was prepared as an account of work sponsored by the United States Government. Neither the United States nor the United States Atomic Energy Commission, nor any of their employees, nor any of their contractors, subcontractors, or their employees, makes any warranty, express or implied, or assumes any legal liability or responsibility for the accuracy, completeness or usefulness of any information, apparatus, product or process disclosed, or represents that its use would not infringe privately owned rights.

ORNL-4819
UC-23 — Radioisotope and
Radiation Applications

Contract No. W-7405-eng-26

ISOTOPES DEVELOPMENT CENTER

A REVIEW OF ALPHA RADIATION SOURCE PREPARATION METHODS AND APPLICATIONS

R. E. Greene
R. S. Pressly
F. N. Case

OCTOBER 1972

OAK RIDGE NATIONAL LABORATORY
Oak Ridge, Tennessee 37830
operated by
UNION CARBIDE CORPORATION
for the
U.S. ATOMIC ENERGY COMMISSION

LOCKHEED MARTIN ENERGY RESEARCH LIBRARIES
3 4456 0515437 4

CONTENTS

Page

ABSTRACT 1

INTRODUCTION 1

CHARACTERISTICS AND PROPERTIES OF ALPHA PARTICLES 2

SELECTING AN ALPHA EMITTER 4

PREPARATION OF ALPHA SOURCES 4

Electrodeposition Methods 6
Electrospraying 12
Vacuum Evaporation 14
Sputtering 17
Evaporation of Solution 18
Painting 18
Other Source Preparation Methods 19

EVALUATION OF ALPHA SOURCES 20

USES OF ALPHA SOURCES 25

Gas Pressure and Density Gages 26
Relative Humidity Gages 29
Thickness Gages and Other Measurement Devices 31
Ionization of Air 34
Static Eliminators 34
Radioactive Lightning Rods 35
Ionic Conditioning of Air 37
Flow Measurement 37
Analytical Applications 39
Reference Alpha Sources 43
Miscellaneous Applications 45

AVAILABILITY OF ALPHA SOURCES 48

ACKNOWLEDGMENT 48

A REVIEW OF ALPHA RADIATION SOURCE PREPARATION METHODS AND APPLICATIONS

R. E. Greene, R. S. Pressly, and F. N. Case

ABSTRACT

A review of the literature on the preparation methods, evaluation, and applications of alpha sources of Po, Th, U. Np, Pu, Am, and Cm isotopes is presented. The characteristics and properties of alpha particles and the selection of an alpha emitter for a particular application are also described briefly. The review does not include information on radium sources or on the use of alpha emitters as sources of heat and energy. About 200 references are cited.

INTRODUCTION

Alpha particles, i.e., helium nuclei of mass 4, are ejected from the nuclei of several radioactive elements. Their high-energy, high-specific ionization, low penetration power, and ability to excite characteristic x rays with little interfering bremsstrahlung radiation are properties that tend to complement those of beta and gamma radiations. Thus, alpha radiations provide means for certain measurements and applications that are not feasible using conventional beta, gamma, and neutron radiation sources. Since quantities of various nuclides that are usable as alpha sources are becoming increasingly available and at reduced cost, a survey of the literature on alpha sources has been made. This survey includes a discussion on the properties of alpha particles, alpha sources, and alpha-emitting nuclides; the preparation of alpha sources, including those for analysis and spectrum measurements; integrity; evaluation and standardization; and uses. The nuclides of primary interest are ^{241}Am, ^{238}Pu, ^{239}Pu, and ^{210}Po since these are most commonly used at present because of relatively high specific activity, availability, and reasonable cost; however, ^{242}Cm, ^{244}Cm, ^{237}Np, ^{228}Th, and the isotopes of uranium are also considered. The use of alpha-emitting sources for the production of neutrons by the (α,n) reaction and for heat or energy sources is not included in this survey.

The ideal alpha source would contain the desired activity, emit alpha particles without degradation of their energy, and be of such integrity that no loss of the alpha emitter would occur during normal handling and use. However, such is not the case and compromises must be made. Highly active sources are required to have a covering (window) to retain any alpha emitter that may become free of the source material and to protect the active deposit from abrasion and possible corrosion by the atmosphere, which in turn, would contribute to loss of material.

Thus for safety, active sources are covered with either an electroplated film, usually silver or gold, or foil, frequently of stainless steel, platinum, etc. With the covering of the source the inevitable reduction of alpha particle energy occurs, and of course, the thicker the covering the less the energy. A 0.17-mil platinum foil will decrease the energy of the ^{210}Po alpha particle by approximately half.[1] If no degradation of alpha particle energy can be tolerated, as for alpha spectrum measurements, the other alternative is to use a much less quantity of the activity, so that if source material does become free, no severe contamination problem results. Thus, for some reference sources, for example for counter or spectral standards, low specific activity may be desirable since, for a given weight loss, much lower activity losses occur. Sources with little actual activity mass may also be desirable — and can often be prepared to provide a relatively smear-free surface. Nevertheless, highly active sources do present problems and some commercial suppliers state that the life of even a gold-plated highly active source is only six months.

References

1. Monsanto Nuclear Products and Services catalog, Monsanto Research Corporation, Dayton, Ohio.

CHARACTERISTICS AND PROPERTIES OF ALPHA PARTICLES

The characteristics and properties of alpha particles will be described only briefly since this information is included in several good texts.[1-4]

The alpha particle, made up of two neutrons and two protons bound together, has a mass of 4 amu and a charge of +2 and is identical to the nucleus of a helium atom. It is the least penetrating of the three common types of radiation (alpha, beta, and gamma) emitted by radioactive materials. The ability of the alpha particle to form ion pairs in a gas through which it passes is one of its most important properties. In this process the alpha particle loses energy by removing an outer electron from atoms to produce ion pairs. The atom less the electron, is positively charged and is one part of the ion pair; the free electron, negatively charged, is the other.

The heavy alpha particle moves more slowly than a beta particle of the same energy and produces approximately 100 thousand ion pairs per centimeter of path; a beta particle with the same energy produces only a few hundred ion pairs per centimeter. A 5-MeV alpha particle is capable of producing approximately 1.5×10^5 ion pairs in its normal range of $\sim$3 cm in air. The intensity of the ionization produced by a moving charged particle through a gas is expressed as specific ionization, i.e., the number of ion pairs formed per centimeter of path. The total number of ion pairs produced by a charged particle is determined largely by its energy since an approximately constant amount of energy is lost for each ion pair formed. The specific ionization increases as the energy

of the alpha particle decreases. If the specific ionization is plotted versus the energy (distance the alpha particle travels from the source), a Bragg curve is obtained. The curve shows that the specific ionization increases with increasing distance from the source. As the energy of the alpha particle is spent, the rate of ionization increases until it reaches a maximum and then falls sharply. When its energy is nearly exhausted, the alpha particle captures two electrons to form a neutral helium atom and produces no further ionization. The abrupt decrease in ionization indicates that alpha particles (from the same source) initially have approximately the same energy and cease to produce ionization after having traveled approximately the same distance.

The distance that an alpha particle will travel before losing all its energy is designated range and depends on the medium through which it travels. This range is frequently given for air. The comparison of the range of an alpha particle in air with that in another medium provides a conventional expression — relative stopping power — of the medium, i.e.,

$$\text{Relative stopping power} = \frac{\text{Range of alpha particle in air}}{\text{Range of alpha particles in medium}} .$$

The range of the medium is the minimum thickness of that medium that will just prevent the passage of alpha particles and, by comparing with the known range in air, the relative stopping power is determined. For example, Glasstone[1] gives a relative stopping power of 2000 for mica, 1700 for aluminum, 3800 for copper, and 4900 for gold. The range of alpha particles in various mediums, which can be determined by experiment or from the stopping power if known, is useful in determining the maximum thickness of protective coatings for alpha sources and also establishes the infinite thickness of the radioactive source material. The infinite thickness is the thickness above which addition of source material will yield no increase in activity per unit area.

Frequently in studies of absorption (stopping) of radiation, e.g., alpha particles, a quantity which is the product of the thickness of the material (in cm) and its density (g/cm^3) is used. The result is mass per unit area, i.e., g/cm^2 or mg/cm^2, which is equivalent to a certain thickness and has been referred to as areal density, thickness density, equivalent thickness, or just thickness.

The range in centimeters of an alpha particle in any medium can be expressed as milligrams per square centimeter. When this areal density (mg/cm^2) is divided by the alpha particle range in air (cm) for the same energy alpha particle, there is obtained a thickness in milligrams per square centimeter that is equivalent to 1 cm of air. This thickness (mg/cm^2), equivalent in stopping power to 1.0 cm of air, is proportional to the square root of the atomic number and is approximately equal to $0.30\ A^{1/2}$ (ref. 1), where A is the atomic number of the element or average mass number of the compound material. Thus, if experimental data are not available, the extent of alpha absorption in various media can be approximated.

References

1. S. Glasstone, *Source Book on Atomic Energy*, 3d ed., Van Nostrand, Princeton, New Jersey, 1967.

2. G. Friedlander, J. W. Kennedy, and J. M. Miller, *Nuclear and Radiochemistry*, 2d ed., Wiley, New York, 1964.

3. R. D. Evans, *The Atomic Nucleus*, McGraw-Hill, New York, 1955.

4. J. Kohl, R. D. Zentner, and H. R. Lukens, *Radioisotope Applications Engineering*, Van Nostrand, Princeton, New Jersey, 1961.

SELECTING AN ALPHA EMITTER

The application for which an alpha source will be used determines to a large part the selection of the particular alpha emitter. Two of the more important qualities of the emitter are activity and half-life. The alpha emitter must provide the activity required, yet the half-life in many applications should be long enough that replacement or frequent calibration of the source is not required. A shorter half-life indicates a higher specific activity and a higher energy since in general, the alpha energy is inversely related to the half-life of the emitter. The activity of the alpha source (per unit area) can be increased by using (1) more of the active material (however, this is self-limiting for alpha particles when an "infinite thickness" of source material is reached), or (2) an emitter of higher specific activity (shorter half-life). Except for reference sources, especially for alpha spectrometry, initial energies are not usually a prime consideration since protective coverings of gold, stainless steel, etc., reduce the energy of the alpha particles by as much as 50% or more.

The cost of the alpha emitter is frequently only a minor part of the total cost of an alpha source since the quantity of source material is usually small and thus its cost modest compared with that of fabrication.

All the alpha emitters are hazardous and on an activity basis (μCi body burden) are considered dangerous. Polonium-210 has a somewhat higher tolerance level because of its physiological behavior and because it has no radioactive daughters and decays directly to stable ^{206}Pb. Table 1 gives some properties of many of the alpha-emitting nuclides.

PREPARATION OF ALPHA SOURCES

Although several methods for the preparation of alpha sources are reviewed, certain essential properties for a suitable source are common for all preparation methods. Probably the most important quality is adherence, and it is essential from two standpoints — the loss of active material will cause both contamination and a change in the emission rate of the

Table 1. Properties of Some Alpha Emitting Nuclides

Nuclide	Half-Life	Principal Alpha Emission Energies (MeV)	Curies per Gram of Nuclide	Alpha[a] (cpm/mg)	Maximum Body Burden	
					(μCi)[b]	(μg)
^{210}Po	138 d	5.30 (100%)	4500	5.19×10^{12}	0.4	8.8×10^{-5}
^{228}Th	1.91 y	5.43 (71%) 5.34 (28%)	821	9.48×10^{11}	0.09	1.1×10^{-4}
^{232}U	72 y	5.32 (68%) 5.26 (32%)	21.5	2.47×10^{10}	0.07	3.2×10^{-3}
^{233}U	1.59×10^{5} y	4.82 (84%) 4.78 (14%)	1.0×10^{-2}	1.11×10^{7}	0.04	4
^{237}Np	2.14×10^{6} y	4.78 (80%) 4.65 (9%)	7.07×10^{-4}	8.14×10^{5}	0.06	84.9
^{238}U	4.47×10^{9} y	4.20 (77%) 4.15 (23%)	3.36×10^{-7}	388	0.02	>1000
^{238}Pu	87.5 y	5.50 (72%) 5.46 (28%)	17.2	1.99×10^{10}	0.04	2.32×10^{-3}
^{239}Pu	2.44×10^{4} y	5.15 (88%) 5.11 (11%)	6.13×10^{-2}	7.08×10^{7}	0.04	0.65
^{240}Pu	6540 y	5.17 (76%) 5.12 (24%)	0.227	2.64×10^{8}	0.04	0.176
^{241}Am	433 y	5.48 (85%) 5.44 (13%)	3.43	3.96×10^{9}	0.1	0.029
^{243}Am	7400 y	5.28 (87%) 5.23 (11%)	0.20	2.30×10^{8}	0.05	0.25
^{242}Cm	163 d	6.11 (74%) 6.07 (26%)	3.32×10^{-3}	3.84×10^{12}	0.05	1.5×10^{-5}
^{243}Cm	30 y	5.79 (73%) 5.74 (11%)	49.1	5.66×10^{10}	0.09	1.9×10^{-3}
^{244}Cm	18.0 y	5.81 (76%) 5.77 (24%)	81.0	9.38×10^{10}	0.1	1.24×10^{-3}
^{234}U	2.47×10^{5} y	4.77 (72%) 4.72 (28%)	6.2×10^{-3}	7.15×10^{6}	0.05	8.1
^{235}U	7.04×10^{8} y	4.40 (57%) 4.37 (18%)	2.16×10^{-6}	2.50×10^{3}	0.06	>1000
^{236}U	2.40×10^{7} y	4.49 (74%) 4.44 (26%)	6.3×10^{-5}	7.32×10^{4}	0.06	950

[a] 52% geometry.
[b] From *Maximum Permissible Amounts of Radioisotopes in the Human Body and Maximum Permissible Concentrations in Air and Water*, Handbook 52, U.S. Department of Commerce, National Bureau of Standards.

source. Good uniformity of thickness is also highly desirable especially with alpha sources, since variations in thickness lead to changes in the alpha spectrum because of changes in self absorption. The substrate on which the source is deposited is also a factor to be considered. Obviously, the substrate must be clean for the deposit to adhere well, and the degree of roughness of the surface is important. For the optimum in alpha source surface geometry, a polished, smooth substrate is necessary. This may be achieved either by mechanical polishing or by electropolishing. Electropolishing is preferred because it provides an ultraclean surface for deposition of the source material. Conversely, if the surface smoothness is not important, larger quantities of source material, especially when using the electrodeposition process, can be deposited on a rough or etched surface than on a smooth polished surface. In effect, etching increases the real surface area without changing the apparent surface area. The source material may not always adhere well to all substrates; therefore, coating or plating of such substrates with a mutually compatible material is sometimes required. For example, in the electrodeposition of uranium onto aluminum, the aluminum, because its surface is usually covered by an oxide film, is coated with zinc prior to the deposition of uranium. This technique can apply to other substrates and source materials. Frequently, to prevent loss of radioactive material and contamination, a plating or covering of another material, e.g., gold, may be necessary over the source material to help prevent loss and the associated contamination. Although such a covering changes the alpha spectrum, coatings are frequently essential, especially with high-activity sources. A brief description of each preparation method is given below. Methods for preparation of sources for counting and alpha-spectrum measurements are included since the techniques used for their preparation can be applicable to preparation of larger or more active sources.

Electrodeposition Methods

From the literature, electrolytic methods appear to be the most common technique of alpha source preparation. In general, in the electrodeposition method the alpha emitter is electrolytically deposited from an electrolyte, ammonium oxalate solution, onto a metallic substrate, e.g., stainless steel, which serves as the cathode. The anode is usually platinum and can also serve as the stirring device. The area of the active deposit is defined by a gasket between the deposition cell and the substrate or by a masking material. With the actinides, the deposit is not in the metallic state but is deposited as a hydrous oxide or other forms of uncertain composition that are subsequently converted to oxide by ignition in air. The electrodeposition method in many instances is quantitative or nearly so, and a good estimate of the quantity of the material deposited can be obtained by knowing the amount of alpha active material dispensed into the cell and then determining the residual amount remaining in the spent electrodeposition solution. The amount deposited is essentially the difference between the two values.

Somewhat similar to electrodeposition is a method called molecular plating and developed by W. Parker (Table 2, refs. 5, 8, and 32). A compound, the

Table 2. Electrodeposition Studies of Various Alpha Emitters

Ref.	Source							Substrate	Electrolyte	Recovery (%)	Thickness	Remarks
	Po	Th	U	Np	Pu	Am	Cm					
(1)			X	X	X	X	X	Hastelloy B	NH_4Cl	99.8 for Pu; others 94-99		U as carrier
(2)		X	X	X				Stainless steel	$(NH_4)_2SO_4$	Quantitative		For alpha spectrometry
(3)		X						Ni, Ni plated Al, stainless steel	$(NH_4)_2C_2O_4$	Up to 96		Cr carrier increases yield
(4)		X	X					Platinum	95% ethanol	∿100		For alpha spectrometry
(5)		X	X					Stainless steel	$UO_2(NO_3)_2$ & isopropanol or $Th(NO_3)_4$ in acetone	98-99.5		Molecular plating
(6)			X					Stainless steel		Quantitative	100 $\mu g/cm^2$	
(7)		X		X						96-100		
(8)		X	X					Stainless steel	$Th(NO_3)_4$ in acetone or $UO_2(NO_3)_2$ & isopropanol	Quantitative		Molecular plating
(9)			X	X	X			Pt or Au	$(NH_4)_2C_2O_4$		2 mg/cm^2 U 800 $\mu g/cm^2$ Np 700 $\mu g/cm^2$ Pu	
(9)						X		Stainless steel or Cu	$HCOO(NH_4)$			
(10)			X					Nickel	$(NH_4)_2C_2O_4$	99.5	0.8 mg/cm^2	
(11)		X	X	X	X	X		Au on Al	Nitrate salt on nuclide in isopropanol	>95	To 100 $\mu g/cm^2$	Molecular plating
(12)		X	X		X	X		Polished steel	NH_4Cl			For alpha spectrometry
(13)			X					Steel, Al	NH_4F	Quantitative[a]	Up to 1 mg/cm^2	
(14)			X					Ni plated Cu	$NH_4C_2O_4$	85-95		
(15)				X	X	X	X		Isopropanol medium	99		For deposition of actinides
			X		X				NH_4Cl	99.4		10 μg U as carrier
(16)				X	X			Stainless steel	NH_4Cl and $H_2C_2O_4$	∿100		
(17)					X				NH_4NO_3			
(18)					X				Isopropyl alcohol and alkali hydroxide	Quantitative		Molecular plating
(19)				X					$HCO_2NH_4 \cdot HClO_4$	Quantitative	150 $\mu g/cm^2$	

Table 2. continued

Ref.	Source							Substrate	Electrolyte	Recovery (%)	Thickness	Remarks
	Po	Th	U	Np	Pu	Am	Cm					
(20)				X				Ni, Pt, Ta, and stainless steel	$(NH_4)_2C_2O_4$		0.57 mg/cm^2	Thicknesses up to 1 mg/cm^2 with successive depositions
(21)	X							Silver	Sodium citrate and HCl	Quantitative		Used Bi carrier
(22)	X							Nickel	HCl	96		
(23)			X					Stainless steel	Fluoride solution			
		X	X	X	X	X		Refractory steel	HNO_3 or HCl solution			
(24)						X			Dimethyl sulfoxide	Quantitative		Molecular plating
(25)					X	X		Nickel	NH_4Cl			
					X		X	Stainless steel	Isopropyl alcohol-HNO_3			
			X					Aluminum				Chemical deposition of U on Al foils
(26)			X			X		Au-Pd metalized plastic film	HNO_3 solution (pH 3)	90-100		
(27)		X	X	X	X	X		Platinum	HNO_3 and other acid solutions	100		
(28)					X			Stainless steel	KOH-NaOCL	85		
			X					Stainless steel	$(NH_4)_2C_2O_4$	90-100		
(29)		X	X	X	X			Stainless steel	$(NH_4)_2SO_4$ solution	Quantitative		
						X	X	Stainless steel	$(NH_4)_2SO_4$ solution	~80		
		X	X	X	X	X	X	Stainless steel	Isopropyl alcohol	Quantitative with small amounts of Fe		
(30)				X				Stainless steel, Al, Cu, Ti	Isopropanol	100	50-500 μg/cm^2	Molecular plating
(31)			X		X			Stainless steel, Ni, Pt, Al, graphite	EDTA or $(NH_4)_2C_2O_4$		Pu to 660 μg/cm^2	
(32)			X					Mercury	Isopropyl alcohol		50 μg/cm^2 self-supporting	Molecular plating
(33)					X			Stainless steel	NH_4NO_3 or HCOOH	Quantitative		Uranium carrier

[a]For thicknesses up to 0.5 mg/cm^2.

same as that in the plating solution, is deposited nearly quantitatively using high voltage (∿600-1000 V) and low current (∿100-200 μA). In this method a small quantity of the source compound is dissolved in a minimum amount of water, and this solution is added to an organic medium, e.g., isopropyl alcohol, in which the compound is at least slightly soluble. Under proper conditions both the electrodeposition and the molecular plating technique give good adherence and essentially quantitative recovery when film deposits are not too thick.

A tabulation of deposition studies by various investigators is given in Table 2, and the alpha emitters most commonly electrodeposited are shown. The substrates, electrolytes or deposition solutions, percent recoveries, and thicknesses of the deposit are also indicated for several of the methods.

Table 2 is not intended to be an exhaustive listing of electrodeposition work, but it does indicate the variety of electrodeposition methods. The molecular plating technique is indicated where applicable. No listing of specific isotopes of the elements has been made since any isotopes of a given element can be deposited by the same procedure as that for the element. Furby[34] has reviewed some of the earlier electrodeposition work with uranium and polonium.

Another less frequently used electrolytic deposition method is that of electrophoresis. It is of importance, however, because quantities up to 12 mg/cm^2 or more can be deposited.[31] Finely divided particles of metal or oxides are suspended in a polar organic liquid having low electrical conductivity. Certain substances, e.g., organic and inorganic acids, added to the organic liquid cause the particles to migrate to the cathode or anode under the influence of a high-tension field up to 3000 V. Coatings formed are quite adherent. The adherence of these deposits is variable and is influenced by the electrode metal, Al, Pt, Cu, etc., quantity of deposit, choice of additive, treatment of the sample after preparation, and particle size of the suspended material. Verdingh[35] has also described the preparation of sources by electrophoresis and electrospraying in another paper.

References

1. M. Y. Donnan and E. K. Dukes, "Carrier Technique for Quantitative Electrodeposition of Actinides," *Anal. Chem.* 36, 392-4 (1964).

2. J. W. Morgan, "Electrodeposition of Thorium, Uranium, and Neptunium from Ammonium Sulphate Solutions," *Radiochim. Acta.* 15(4), 190-3 (1971).

3. E. Cerrai, R. Dugnani, and F. Gazzarrini, "Preparation of Thorium Thin Layers Through Electrolytical Deposition on Different Metallic Supports," *Energia nucleare (Milan)* 9, 200-5 (1962)(In Italian).

4. S. M. Kim, J. E. Noakes, L. K. Akers, and W. W. Miller, *Electrodeposition of Actinides and Lanthanides*, ORINS-48, Oak Ridge Institute of Nuclear Studies (Dec. 15, 1965).

5. W. Parker, H. Bildstein, and N. Getoff, "Molecular Plating. I. A Rapid and Quantitative Method for the Electrodeposition of Thorium and Uranium," *Nucl. Instrum. Methods* 26, 55-60 (1964).

6. R. Gaeta and F. Manero, "Quantitative Electrodeposition of Uranium on Intermediate Fluorohydrides," *Anales Real Soc. Espan. Fis. Quim. (Milan)* A60, 45-50 (1964)(In Spanish).

7. G. S. Petit, J. D. Griffin, and C. A. Kienberger, *Electrodeposition of Thorium, Neptunium, and Technetium*, K-1761, Oak Ridge Gaseous Diffusion Plant (Oct. 17, 1968).

8. W. Parker, H. Bildstein, and N. Getoff, "Quantitative Electrodeposition of Thorium and Uranium," *Nature* 200, 457-8 (1963).

9. M. Valentin and J. Champion, "Preparation of α-Actinide Foils by Electrolysis," Proc. of the Seminar on the Preparation and Standardisation of Isotopic Targets and Foils, Harwell, Oct. 20-21, 1965, pp. 86-7, M. L. Smith (ed.), AERE-R-5097 (Dec. 1965)(Conf. 651055).

10. R. W. Lamphere and R. E. Greene, "Neutron-Induced Fission Cross Sections of ^{234}U and ^{236}U," *Phys. Rev.* 100(3), 763-70 (1955).

11. S. Prakash, S. B. Manohar, R. J. Singh, and M. V. Ramaniak, "Preparation of Actinide Targets by Electrodeposition on Aluminum," *Intern. J. Appl. Radiat. Isotop.* 22, 128-9 (1971).

12. M. L. Aceña, "Preparation of Radioactive Sources by Electrodeposition for Alpha Spectrometry," in Standardization of Radionuclides, Proc. of a Symposium on Standardization of Radionuclides, Vienna, Oct. 10-14, 1966, pp. 487-97, International Atomic Energy Agency, Vienna, 1967, STI/PUB/139 (Conf. 661012).

13. V. Pfeifer and H. Bildstein, *Study on Uranium Electrolytic Deposition on Metal*, SGAE-CH-16/1965, Oesterreichische Studiengesellschaft fuer Atomenergie G.M.b.H, Seibersdorf. Institute fur Chemie (1965).

14. H. Levine and A. Lamanna, "Radiochemical Determination of Uranium in Environmental Media by Electrodeposition," Public Health Service Publication No. 999-RH-11 (March 1965).

15. M. Y. Donnan and E. K. Dukes, *Quantitative Electrodeposition of Actinides from Isopropyl Alcohol*, DP-1048, Savannah River Laboratory (August 1966).

16. D. Tomlin and G. A. Barnett, "Rapid Plutonium Electrodeposition," *Health Phys.* 11, 783 (1965).

17. M. Kondo, "Electrodeposition of ^{239}Pu in Ammonium Nitrate Solution," Akaishi, Jun; Tseng, Chia-lian, *Nucl. Sci. J. (Taiwan)* 7, 29-35 (1969)(In Chinese).

18. N. Getoff, H. Bildstein, H. Riedl, and H. Saukel, *Molecular Plating. IV. A Rapid Method for the Electrodeposition of Plutonium*, SGAE-CH-15/1965, Oesterreichische Studiengesellschaft fuer Atomenergie G.m.b.H, Seibersdorf. Institut fuer Chemie (1964).

19. H. C. Jain, R. H. Iyer, M. N. Namboodiri, and M. Rajagopalan, "Electro Deposition of Heavy Elements ^{227}Ac and ^{237}Np," Proc. of the Nuclear and Radiation Chemistry Symposium, 1964, pp. 51-6, Trombay, India, Atomic Energy Establishment, 1965 (Conf. 640308).

20. G. A. Dupetit, "Preparation of Neptunium Targets by Electrodeposition," *J. Inorg. Nucl. Chem.* 24, 1297 (1962).

21. W. W. Flynn, "Determination of Low Levels of ^{210}Po in Environmental Materials," *Anal. Chim. Acta.* 43, 221-8 (1968).

22. R. L. Blanchard, "Rapid Determination of ^{210}Pb and ^{210}Po in Environmental Samples by Deposition on Nickel," *Anal. Chem.* 38, 189-92 (1966).

23. M. L. Aceña Barrenechea, "Procedure for the Preparation of Samples for Alpha Spectrometry Developed by the Plutonium Chemistry Group and the Office of Chemistry and Isotopes," First Franco-Spanish Colloquium on the Processing of Irradiated Fuels, Fontenay-aux-Roses, France, November, 1967, pp. 83-92, Centre d'Etude Nucleaires, 1968 Conf. 671143)(In Spanish).

24. T. H. Handley and J. H. Cooper, "Quantitative Electrodeposition of Actinides from Dimethyl Sulfoxide," *Anal. Chem.* 41, 381-2 (1969).

25. J. E. Evans, R. W. Lougheed, M. S. Coops, R. W. Hoff, and E. K. Huler, "The Use of Electrodeposition Methods to Prepare Actinide Targets for Cross-Section Measurements and Accelerator Bombardments," Proc. of the Third International Symposium on Research Materials for Nuclear Measurements, Gatlinburg, Tennessee, Oct. 5-8, 1971, pp. 21-38 (Conf. 711002).

26. M. Bellemare and J. C. Roy, "Cell and Techniques for the Electrodeposition of Insoluble Hydroxides on Thin Metalized Plastic Films," *Nucl. Instrum. Methods* 96(1), 209-11 (1971).

27. A. G. Samartseva, *Electrodeposition of Small Amounts of Uranium, Neptunium, and Plutonium*, AEC-tr-4497, pp. 400-10, translated from Trudy Vsesoyuz. Nauch.-Tekh. Konf. po Primenen. Radioaktiv, i Stabil. Izotopov i Izluchenii v Narod. Khoz. i Nauke, Moscow, 1957 (1958), izotopy i Izlucheniya v Khim., pp. 318-25.

28. S. Hammon, Jr., *Alpha Standard Source Preparation*, RFP-278, Rocky Flats Plant (1962).

29. K. Rudran, *Comparative Study of Electrodeposition of Actinides from Aqueous Ammonium Sulphate and Isopropyl Alcohol*, AERE-R-5987, Atomic Energy Research Establishment, Harwell (1969).

30. W. Parker and M. Colonomos, "Preparation of Thin Layers of ^{237}Np for Absolute Counting and Fission Detectors," *Nucl. Instrum. Methods* 66, 137-40 (1968).

31. V. Verdingh, "The Preparation of Samples by Electrochemical Methods," Proc. of the Seminar on the Preparation and Standardisation of Isotopic Targets and Foils, Harwell, Oct. 20-21, 1965, M. L. Smith (ed.), AERE-R-5097 (December 1965)(Conf. 651055).

32. W. W. Parker and W. Gullholmer, "Molecular Plating: Preparation of Self-Supporting Films," Proc. of Seminar on the Preparation and Standardisation of Isotopic Targets and Foils, Harwell, Oct. 20-21, 1965, pp. 88-91, M. L. Smith (ed.), AERE-R-5097 (December 1965) (Conf. 651055).

33. W. R. Amos and R. H. Lambek, *Electrodeposition of Plutonium for Alpha Pulse Height Analysis of Pu-236 in Pu-238*, MLM-1621, Mound Laboratory (May 9, 1969).

34. E. Furby, *Notes on the Preparation Within the Authority of Thin Films of Radioactive Materials*, AERE-M-1008 (March 1962).

35. V. Verdingh, "Preparation of Layers by Electrospraying and Electrophoresis," Proc. of the Third International Symposium on Research Materials for Nuclear Measurements, Gatlinburg, Tennessee, Oct. 5-8, 1971, pp. 160-5 (Conf. 711002).

Electrospraying

Electrospraying is a technique of preparing thin layers of radionuclides from a few micrograms per square centimeter up to several milligrams per square centimeter and active areas from a few square millimeters to several hundred square centimeters on even ultrathin (10 $\mu g/cm^2$) backing materials. The essential part of the equipment is a capillary from which a solution (alcohol, acetone, chloroform, etc.) of the active material is ejected by means of an electrical field. In this process a contact wire is inserted in the capillary 1/8 to 1 in. from the tip and is connected to a 3- to 10-kV high voltage supply. The high voltage forces the liquid through the narrow capillary as a spray of tiny droplets which is projected toward the grounded backing which may be thin metal or metal-coated plastic foil. The solvent must be sufficiently volatile to evaporate during its passage from capillary to backing material. The electrostatic acceleration

in the high voltage field is high enough to ensure good adherence of the deposited particles to the backing. The radioactive material to be deposited must be soluble in the solvent used, and the compound should be stable and nonhydroscopic or be convertible to such a compound by heating. The deposit is quite uniform and yields are high, 75-100%. The method has the advantage that even where only a small amount of source material is available sources can be prepared because of the high efficiency of the technique. The shape of the deposit is defined by a mask so some edge effect can be expected, and, in some instance, a guard ring and collimator at a potential somewhat less than that of the capillary can be used to focus the spray.[1] The production of radioactive sources by electrospraying has been described by several authors.[1-11]

References

1. K. M. Glover and P. S. Robinson, "Electrospraying, Vacuum Sublimation and Painting," Proc. of the Seminar on the Preparation and Standardisation of Isotopic Targets and Foils, Harwell, Oct. 20-21, 1965, pp. 50-7, M. L. Smith (ed.), AERE-R-5097 (December 1965) (Conf. 651055).

2. V. Verdingh, "The Preparation of Samples by Electrochemical Methods," Proc. of the Seminar on the Preparation and Standardisation of Isotopic Targets and Foils, Harwell, Oct. 20-21, 1965, pp. 58-65, M. L. Smith (ed.), AERE-R-5097 (December 1965)(Conf. 651055).

3. W. Parker and W. Gullholmer, "Electrospray," Proc. of the Seminar on the Preparation and Standardisation of Isotopic Targets and Foils, Harwell, Oct. 20-21, 1965, pp. 48-9, M. L. Smith (ed.), AERE-R-5097 (December 1965)(Conf. 651055).

4. V. Verdingh, "Preparation of Layers of Electrospraying and Electrophoresis," Proc. of the Third International Symposium on Research Materials for Nuclear Measurements, Gatlinburg, Tennessee, Oct. 5-8, 1971, pp. 160-5 (Conf. 711002).

5. L. N. Blumberg, P. Stein, and J. C. Gursky, *Electrospraying of Thin Targets*, LA-2711, Los Alamos Scientific Laboratory (May 1962).

6. P. S. Robinson, "The Production of Radioactive Sources by the Electrospraying Method," *Nucl. Instrum. Methods* 40, 136-40 (1966).

7. S. A. Lindsay, *Electrospraying Device for Producing Thin, Uniform Sources from Rod Dissolver and Final Product Plutonium Solutions*, AECL-2666, Atomic Energy of Canada Limited (April 1967).

8. V. Verdingh and K. F. Lauer, "Equipment for Electrospraying," *Nucl. Instrum. Methods* 49, 179-80 (1967).

9. M. Dakowski, H. Piekarz, and M. Sowinski, *A Method of Target Preparation by Electro-Spraying Directly on Semiconductor Detectors*, INR-595/IA/PL (January 1965).

10. D. J. Carswell and J. Milsted, "A New Method for the Preparation of Thin Films of Radioactive Material," *J. Nucl. Energy* 4, 51-4 (1957).

11. E. G. Dermendzhiev and M. K. Delchev, "Preparation of Uranium Targets by Electrocapillary Method," *Pribory i Tekhn. Eksperim.* 4, 170-3 (1963)(In Russian).

Vacuum Evaporation

The vacuum evaporation technique has wide application since any of the actinide metals or oxides can be evaporated or sublimed at temperatures $\gtrsim$2300°C. Because of the high temperature involved, refractory metal or oxide crucibles must be used for compatibility. Tantalum, tungsten, molybdenum, beryllium oxide, thoria, and zirconia are examples of suitable crucible materials. This technique has to a large extent, especially with the actinides, replaced the older resistance filament technique which was only about 1% efficient and coated much of the equipment in addition to the desired target or source substrate.

For achieving the evaporation temperatures necessary, electron-bombardment or radiofrequency induction heating is the method of choice. One electron-bombardment technique makes use of a water-cooled copper hearth in which an appropriate ceramic crucible is placed and used to contain the evaporant. A heated tungsten filament supplies an electron beam which is then bent in an angle of approximately 270° by a magnetic field and can be focused to directly bombard the oxide or metal contained in the crucible. Unfortunately, this technique produces a vapor beam whose cross-section angle is usually 120°. Thus, dispersion of evaporant over a large area occurs, and material is wasted or must be reclaimed from the walls of the system.

Most frequently a narrow vapor angle is preferred in an effort to conserve material and reduce system contamination. When a refractory metal or graphite crucible with a length much longer than its internal diameter (at least tenfold) is used, vapor flow can be made to approximate a laminar condition and thus a pencil of vapors can be directed toward the substrate with efficiency greater than that obtained with low-profile crucibles. Relatively high yields of condensed material can be attained by this method (about 20%) as compared to less than 1% realized using the bent-beam electron bombardment system. Heating of the tubular crucible is performed by either electron bombardment or induction.

Appropriate metal, ceramic, or even organic substrates can be placed at various distances from the vapor source and can be mechanically manipulated, e.g., single rotation or planetary rotation, to achieve maximum uniformity of the condensed layer. Film thicknesses varying from <1 μg/cm^2 to >50,000 μg/cm^2 have been achieved by this technique, and the

deposited layer is quite adherent. Choices of the substrate material, substrate-to-source distance, and evaporation rate are all interrelated and depend upon the target configuration, thickness of the deposit, and the evaporant properties. The vacuum evaporation technique for the preparation of alpha-emitting sources and targets has been described by numerous authors.[1-20]

References

1. E. H. Kobisk, "Targets Made to Order," *Oak Ridge Nat. Lab. Rev.* 3(1), 1-11 (1969).

2. E. H. Kobisk, "ORNL Target Center," in Research Materials Coordination and Planning Meeting, November 14-15, 1963, pp. 109-12, P. S. Baker (comp.), ORNL-TM-1047, Oak Ridge National Laboratory (April 1965).

3. E. H. Kobisk, "Isotope Targets for Nuclear Research," *Nucleonics* 24(8), 122-4 (1966).

4. E. H. Kobisk, *Review of Isotopes Target Program, January 1965-December 1967*, ORNL-4308, Oak Ridge National Laboratory (October 1968).

5. F. R. O'Donnell and H. L. Adair, *A Vacuum Deposition Technique for Thin Films of Po-210 on Aluminum and Titanium*, ORNL-4510, Oak Ridge National Laboratory (March 1970).

6. E. H. Kobisk, "Preparation of Isotope Targets by Electron-Bombardment Techniques," Proc. of the Seminar on the Preparation and Standardisation of Isotopic Targets and Foils, Harwell, Oct. 20-21, 1965, pp. 5-10, M. L. Smith (ed.), AERE-R-5097 (December 1965). Same as ORNL-P-1900, Oak Ridge National Laboratory, December 28, 1965 (Conf. 651055).

7. J. G. Povelites, "Preparation of Thin Films of UO_2 and PuO_2 by Vacuum Evaporation," Proc. of Seminar on the Preparation and Standardisation of Isotopic Targets and Foils, Harwell, Oct. 20-21, 1965, pp. 23-9, M. L. Smith (ed.), AERE-R-5097 (December 1965) (Conf. 651055).

8. K. M. Glover and P. S. Robinson, "Electrospraying, Vacuum Sublimation and Painting," Proc. of the Seminar on the Preparation and Standardisation of Isotopic Targets and Foils," Harwell, Oct. 20-21, 1965, pp. 50-7, M. L. Smith (ed.), AERE-R-5097 (December 1965) (Conf. 651055).

9. K. M. Glover, "Preparation and Calibration of Alpha-Active Sources of the Actinide Elements," in *Standardisation of Radionuclides*, Proc. of a Symposium on Standardization of Radionuclides, Vienna, Oct. 10-14, 1966, pp. 461-71, International Atomic Energy Agency, Vienna, 1967, STI/PUB/139 (Conf. 661012).

10. J. Van Audenhove, "High Frequency Levitation Heating and Its Applications to: 1. Evaporation of Thin Layers and 2. Preparation of Homogeneous Al Alloys," Proc. of the Seminar on the Preparation and Standardisation of Isotopic Targets and Foils, Harwell, Oct. 20-21, 1965, pp. 115-22, M. L. Smith (ed.), AERE-R-5097 (December 1965) (Conf. 651055).

11. K. M. Glover, F. J. G. Rogers, and T. A. Tuplin, "Techniques Used at Harwell in the Preparation of Stable and Active Nuclide Targets," Proc. of the Third International Symposium on Research Materials for Nuclear Measurements, Gatlinburg, Tennessee, Oct. 5-8, 1971, pp. 91-100 (Conf. 711002).

12. G. Sletten, "Preparation of Targets of Alpha-Radioactive Isotopes," Proc. of the Third International Symposium on Research Materials for Nuclear Measurements, Gatlinburg, Tennessee, Oct. 5-8, 1971, pp. 116-21 (Conf. 711002).

13. H. L. Eschbach, "Preparation of Standard Layers of Vacuum Evaporation," Proc. of Third International Symposium on Research Materials for Nuclear Measurements, Gatlinburg, Tennessee, Oct. 5-8, 1971, pp. 122-33 (Conf. 711002).

14. J. E. Strain and G. W. Leddicotte, *The Preparation, Properties, and Uses of Americium-241, Alpha-, Gamma-, and Neutron Sources*, ORNL-3335, Oak Ridge National Laboratory (September 1962).

15. L. de Bersuder, *Technique of Preparation of Plutonium Screens for Soft X-Ray Spectrography*, CEA-2338 (1963)(In French). English translation, UCLR-trans-10232, by B. Thayne for Univ. of California, Lawrence Radiation Laboratory.

16. E. Furby and K. L. Wilkinson, *The Deposition of Thin Films of Radioactive Materials by Vacuum Evaporation*, AERE-C/R-2441 (June 1968).

17. J. Weisman (ed.), "Miniature Neutron Detector Development," *Quarterly Progress Report for Period, January 1-March 31, 1964*, WCAP-2596, Westinghouse Electric Corporation, Atomic Power Div. (April 1964).

18. J. Milsted, *The Preparation of Thin Alpha Sources by Vacuum Sublimation*, AERE-C/R-1379 (February 1954).

19. R. W. Jones, *The Preparation of Pu^{239} and U^{233} Sources by Sublimation*, PBD-106 (January 1954).

20. N. Jackson, "Vacuum Sublimation Apparatus for Preparation of Thin Sources of α-Active Materials," *J. Sci. Instrum.* 37, 169-71 (1960).

Sputtering

The technique of argon sputtering requires that a target disk of pressed or fused oxide or metal be used as a material source. This is located directly beneath or above a substrate onto which sputtered material is to be collected. The principle involved in this technique is the generation of an argon plasma (pressure of <1000 torr) that creates energetic argon ions which in turn impinge on the target causing sputtering or spallation of the target material. The argon plasma is generated either by a high electric potential (1000 to 6000 V) between an electron-generating filament and the target, if metal targets are used, or by radiofrequency induction which is applicable if ceramic targets are used. The distance between the target and the substrate must be carefully regulated to preserve the Crooks dark space. Groups of atoms or molecules sputtered from the target are collected on the substrate, and, being energetic, deposit energy on the substrate in the form of heat; therefore, a careful choice of substrate material and/or of the energy applied to the sputtering process must be made.

The advantage of sputter-deposition is that (1) the substrate can be cleaned in place by backsputtering the surface layer of the substrate, (2) excellent adhesion of the condensed molecules is achieved because of the clean substrate surface and the energetic nature of the process, (3) mixtures of material can be cosputtered, e.g., glasses composed of two or more molecular species, and (4) multiple targets can be used to generate multilayer deposits with consecutive sputterings. The biggest disadvantage of the sputtering technique is that a large target containing grams of the actinide material must be used. The radiation field generated by this large target and the low abundance of the material itself frequently prohibits the use of this method, especially when a simple glove box containment area having only minor radiation shielding is used. Efficiency of the sputtering process is about 10%. More than one substrate can be used simultaneously provided the area subtended by the multiple substrates does not exceed 80% of that of the target.

Both the vacuum evaporation and the sputtering processes are useful, but generally, when high assay actinide isotopes are being deposited, the evaporation technique is superior both in terms of efficiency and capability of using only submilligram quantities of material. The sputtering technique has been described in a recent conference.[1,2]

References

1. G. Sletten and P. Knudsen, "Preparation of Isotope Targets by Heavy Ion Sputtering," Proc. of the Third International Symposium on Research Materials for Nuclear Measurements, Gatlinburg, Tennessee, Oct. 5-8, 1971, pp. 109-15 (Conf. 711002).

2. J. H. Jarrett, "Thin Film Radiation Sources by Radiofrequency Sputtering," Proc. of the Third International Symposium on Research Materials for Nuclear Measurements, Gatlinburg, Tennessee, Oct. 5-8, 1971, pp. 147-59 (Conf. 711002).

Evaporation of Solution

A simple method for the preparation of alpha sources, frequently for alpha spectrometry and counting, is the precipitation method where either an aqueous or organic solution of the source material is evaporated to dryness on a substrate. Although the method may not produce as adherent a deposit as that of electrodeposition, vacuum evaporation, or electrospraying methods, it is fast and gives 100% yields. The substrate material, platinum, stainless steel, glass, etc., is cleaned and in some cases a masking material might be applied or the substrate might have a small depression in its center. The solution is added in small portions and is carefully evaporated. If ammonium salts are present, the plate is heated to a higher temperature to fume these salts away; however, boiling at any stage is avoided to prevent loss of material. After the evaporation is complete, the substrate plate is flamed or ignited at a red heat for further removal of any volatile material. This method has been used by several authors, most frequently for alpha spectrometry.[1-3]

References

1. R. A. Deal and R. N. Chanda, "A Rapid Source Preparation Technique for High-Resolution Alpha-Particle Spectroscopy," *Nucl. Instrum. Methods* 69, 89-92 (1969). Same as Report IN-1081 Idaho Nuclear Corporation, April 1967.

2. H. W. Kirby and J. J. Dauby, "Preparation of Sources for Alpha Spectrometry," *Radiochimica Acta* 5(3), 133-7 (1966).

3. K. H. Koenig, "Preparation of Calibrated Radiation Sources for Alpha-Ray Spectrometry," *Atompraxis* 9, 365-7 (1963)(In German).

Painting

The preparation of alpha sources by painting is more an art than a science. The painting process has been discussed by Furby,[1] and by Glover and Robinson.[2] Although relatively thick films can be prepared by this method, the quality and uniformity of the source depends on the skill of the operator. In general, the active material is evaporated to dryness in a vacuum desiccator, and the residue is dissolved in a small amount of alcohol. A dilute solution of cellulose nitrate is then added, and the mixture is further diluted with alcohol. The backing foil can be masked to define the active area. The paint

solution is applied to the backing material with a brush and allowed to dry; the residue is then fired. The procedure can be repeated until the desired thickness of deposit has been acquired. Applying the brush strokes in different directions for each layer of deposit improves uniformity.

References

1. E. Furby, *Notes on the Preparation Within the Authority of Thin Films of Radioactive Materials*, AERE-M-1008 (March 1962).

2. K. M. Glover and P. S. Robinson, "Electrospryaing, Vacuum Sublimation and Painting," Proc. of the Seminar on the Preparation and Standardisation of Isotopic Targets and Foils, Harwell, Oct. 20-21, 1965, pp. 50-7, M. L. Smith (ed.), AERE-R-5097 (December 1965) (Conf. 651055).

Other Source Preparation Methods

A few other source preparation methods can be found in the literature; however, they are not widely used. Bjoernholm and Lederer[1] have prepared thin cation exchange foils as substrates for alpha sources. Commercial polystyrene sheets treated with fuming sulfuric acid produce a thin-layer cation exchanger. A specific capacity of 5.6 milliequivalents per gram was obtained, and the thickness can be varied from a few to several hundred micrograms per square centimeter. The foils have been used to prepare alpha sources of Cm, Cf, Es, and Fm in 20 to 30 min with yields of 70 to 90%. The sources are uniform, and cations can be absorbed selectively with good yield. Bjoernholm, Johansen, and Nordby[2] have also described the preparation of alpha and beta spectrometry sources on plastic foil backings with thicknesses of about 30 $\mu g/cm^2$. Polystyrene foils can be made hydrophilic within a small spot, defining the source area.

Other workers[3,4] have made alpha sources by adsorption on inorganic substrates. El Guebely and Sikkeland[3] have prepared infinitely thin sources of plutonium by adsorption from hydrochloric acid solutions onto glass, aluminum, and platinum surfaces. Thiele, Cheng, and Yang[4] have investigated the preparation of alpha and beta sources by adsorption of the radioactive nuclide on thin layers of aluminum oxide produced by anodic oxidation. Various parameters affecting adsorption behavior were investigated, and sources of ^{241}Am and natural uranium were prepared.

A few workers have prepared alpha sources in the form of glasses and enamels on a metal backing, or in other forms. Jones[5] prepared silicate glasses containing plutonium oxide. The glasses effectively reduce the hazards normally associated with plutonium oxide and can be formed into fibers, microspheres, and rods. The plutonium-bearing glasses were used for standard alpha sources because of their freedom of contamination and their chemical durability.

Petrova *et al.*[6] have shown the advisability of the practically universal methods of preparing alpha, beta, and gamma sources from inorganic enamels. Such sources allow for a wide range both in intensity and in form.

A French patent[7] has been awarded to Cimetiere, Desroches, and Routier and describes a process for manufacturing sources. A layer of enamel containing ^{241}Am in the form of americium silicate is produced by melting an enamel powder containing the ^{241}Am on the surface of a backing material.

References

1. S. Bjoernholm and C. M. Lederer, "Thin Cation-Exchange Foils," *Nucl. Instrum. Methods* 15, 233-6 (1962).

2. S. Bjoernholm, E. R. Johansen, and H. Nordby, "Microscale Chemical Techniques for Preparing α- and β-Spectroscopy Sources," *Nucl. Instrum. Methods* 27, 243-52 (1964).

3. M. A. El Guebely and T. Sikkeland, "Preparation of Infinitely Thin Plutonium Sources by Adsorption," *Acta Chem. Scand.* 11, 473-8 (1957).

4. R. W. Thiele, W. P. M. Cheng, and S. Yang, "Adsorption of Radioisotopes on Thin Al_2O_3-Layers Produced by Anodic Oxidation as a Method for Source Preparation," *Nucl. Sci. J. (Taiwan)* 7, 19-28 (1969).

5. L. V. Jones, "Plutonium-Bearing Glass for Nuclear Applications," *Ceram. Bull.* 43, 131-4 (1964).

6. M. S. Petrova, D. M. Zeav, Shwebelblett, I. I. Balaklayets, W. P. Sytin, and W. N. Tshessalin, "New Preparation Methods for α-, β-, and γ-Sources," presented at the International Conference on Radioisotopes in Scientific Research, Sept. 9-20, 1957, Paris, UNESCO/NS/RIC/11, Pergamon Press, Ltd. London, 1957.

7. C. Cimetiere, J. Desroches, and C. Routier, "Process for the Fabrication of Alpha Sources," French Patent 2,041,947, Jan. 25, 1971 (filed May 28, 1969); assigned to Commissariat a l'Energie Atomique.

EVALUATION OF ALPHA SOURCES

Once an alpha source has been obtained, either by preparation in the laboratory or by purchase, it is desirable to evaluate the source alpha emission rate (unless the vendor certifies the emission value of the source) and to test for adherence and contamination.

Adherence of the alpha emitter to the substrate material is one of the most important properties of an alpha source, since, as mentioned elsewhere in this survey, loss of the alpha emitter has a twofold effect —

change in emission rate and contamination of the source environment. Frequently the alpha sources are covered with a thin foil which helps to retain any loose alpha emitter; however, movement of the emitter under the foil may change the source emission characteristics by changes in self-absorption. A smear test on the alpha source, either covered or uncovered, should not show a release of activity greater than 0.005 μCi or the applicable statutory limit. Sometimes an uncovered alpha source is leach tested by immersion in distilled water at 50°C for 4 hr. The total activity removed should again not exceed 0.005 μCi or the prescribed limit. As an added precaution, the alpha source can be given a shelf test, which involves a second smear test after at least a 7-day waiting period, to ensure a release of alpha emitter of no greater than the established limit. After satisfactory adherence has been established, the emission rate of an alpha source, with the possible exception of alpha spectral standards or reference sources, is probably the most important parameter to be considered. If the intensity of the alpha particles (number emitted per unit time) from the source is within the counting capabilities of an alpha detector,[1-3] counting is a convenient method for determining the emission rate. The rates can be compared with those of standard sources[4] that have been calibrated for example by alpha-gamma coincidence counting. If the counting rate of the source exceeds that of the alpha detector (counter) a thin metal mask containing one or several holes can be placed on the source during counting to reduce the number of alpha particles striking the detector. From the observed count corrected by a conversion factor determined by counting an alpha source of lesser activity with and without the mask, the emission rate of the source under evaluation is determined. Masking plates can be fabricated to give the desired ratio of hole area to source area.

The intensity of alpha radiation has been measured by secondary nuclear reactions. High-energy alpha particles from the source under test produced neutrons by (α,n) reaction[5] on suitable low Z material. These neutrons impinging upon a monitoring material cause radioactivation. The amount of radioactivity induced in the monitoring material establishes the relative strengths of alpha sources.

The alpha output[6] from sources containing larger amounts of radioactivity, e.g., 16 Ci of ^{210}Po, can be measured by measuring the current (energy) transferred from the alpha source to the collector plate by alpha particles. The source and collector plate are placed in a vacuum to prevent ionization.

In a somewhat similar manner, by the use of an extrapolation ionization chamber, alpha particles from a source ionize the surrounding air and cause current to flow between the source and the collector plate. By measuring the current at various distances from the source and extrapolating the results, dose rates[7,8] can be determined to give flux and dose at the surface of the sample.

For some applications of alpha sources, especially for standard or reference sources, it is desirable to know not only the intensity but also the energy distribution of alpha particles being emitted. Sources

that contain only small quantities of material uniformly distributed over the backing surface display a minimum amount of self-absorption and scattering. They emit alpha particles that are at or near their full energy and are nearly monoenergetic. As the quantity of source material is increased the energy of some of the alphas is decreased and a change in the spectrum occurs. This change is related to the thickness of the deposit.[9] Studies have been made to determine the alpha-energy spectrums from sources of known composition.[10-14] With these data, the energy spectrums from other complex alpha sources can be predicted and, inversely, by knowing the composition of the source and its energy spectrum, the thickness of the radioactive deposit can be calculated.[9] The energy spectrum of the alpha radiation from a source includes the direct radiation and all other contributions caused by backscatter of the alpha particle from the backing[15,16] and scatter from the matrix material.

Good uniformity of the deposit of the alpha active material is desirable, and variations in uniformity will cause differences in emission rate from different portions of the active surface as well as distortion of the energy spectrum. Autoradiography[17] using photographic film or glass plates coated with nuclear emulsions has been used with alpha sources to show the distributions of the radioactivity. Densitometric[18] measurements taken on the film or plate give a ratio of the intensities of radiation from different locations on the source area. These photographic plates also show the path and relative energy of more penetrating proton radiation[19] which may emerge from alpha sources, particularly those sources with high energy alpha radiation.

Uniformity of the source deposit can also be evaluated by using a mask, e.g., a hole in a thin metal plate,[27] and counting various areas of the active deposit. The area of the hole can be, for example, a few percent of the total source area.

Table 3 lists references relative to evaluation of alpha sources of various nuclides and indicates the parameter measured and the method used.

References

1. *Annual Progress Report for the Period July 1965 Through June 1966*, NBL-237, New Brunswick Laboratory (February 1967).

2. *Annual Progress Report for the Period July 1961-June 1962*, NBL-188, New Brunswick Laboratory (December 1962).

3. F. Asaro, "Alpha-Particle Measurements and Standards," Proc. of the International Conference on Nuclidic Masses, pp. 223-7, H. E. Duckworth (ed.), University of Toronto Press, 1960.

4. D. E. Watt, R. L. G. Keith, and F. Brown, *An Intercomparison of the Determination of Pu-239, Pu-238, and Pu-236 by α Counting Techniques*

Table 3. Source Evaluation

Radioisotope	Parameter Measured	Method Used	Ref.
^{238}U	Standardization sources	Alpha-gamma coincidence	(1)
^{241}Am	Alpha intensity	Alpha-gamma coincidence	(2)
^{210}Po	Energy spectrum	Alpha spectroscopy	(3)
^{238}Pu, ^{239}Pu	Intensity of alpha	Counting standard source	(4)
Alpha emitters	Alpha intensity	(,n) and (n,) reactions	(5)
^{210}Po	Alpha intensity	Flow of current in vacuum	(6)
Alpha sources	Dose rate	Theoretical and semi-empirical relations	(7)
Alpha emitters	Alpha dose rate uniformity	Actinometric photographic plates	(8)
^{234}U, ^{241}Am	Effect of absorbers on alpha energy	Surface barrier detector	(9)
Alpha emitters	Energy spectra	Comparison to standard	(10)
Alpha emitters	Effect of thickness Effect of thickness	Energy spectra Angular intensity	(11)
^{239}Pu	Predict energy spectrum	Comparison to spectrum from sources of known composition	(12)
Alpha emitters	Self-absorption	Energy spectrum	(13)
^{238}U	Energy spectrum	Nuclear emulsions	(14)
Alpha emitters	Alpha backscatter coefficient	Intensity measurement	(15)
^{210}Po	Energy spectrum	Alpha spectroscopy	(16)
^{241}Am, ^{238}U, ^{238}Pu, ^{239}Pu	Uniformity	Autoradiography	(17)
^{210}Po	Alpha and proton emission	Photographic plates	(19)
^{238}Pu	Energy spectrum distortion and self-absorption	Comparison to experimentally determined values from ^{238}Pu microspheres	(20)
^{210}Po, ^{241}Am	Energy loss Charge of recoil particles	Ionization chamber Magnetic spectrography	(21)
^{241}Am	Absorption of alpha in stainless steel	Energy spectrum	(22)
Alpha emitters	Dose depth	Calculations and TLD	(23)
^{210}Po	Radiation dose	Extrapolation chamber	(24)
^{210}Po	Stability of sources	Loss by recoil and evaporation	(25)
^{241}Am	Alpha angular intensity Alpha energy	Surface barrier detector	(26)

in the UK, USA, and Canada, AWRE-O-59/63, Atomic Weapons Research Establishment, Aldermaston, Berks., England (July 1963).

5. E. G. Segré, "Method and Apparatus for Measuring Strong Alpha Emitters," American Patent 2,573,069, Oct. 30, 1951; assigned to U.S. Atomic Energy Commission.

6. Oak Ridge National Laboratory, *Evacuated Alpha Chamber*, CAPE-1831.

7. *Dosimetry*, MIT-952-5 (Part I), pp. 137-83, Massachusetts Institute of Technology, Cambridge.

8. R. F. Itzhaki, "An α-Ray Source and Its Dosimetry," *Physics in Med. Biol.* 5, 61-72 (1960).

9. L. H. Peshori, P. P. V. J. Nambiar, and D. V. Gopinath, "Effect of Absorbers on Alpha Spectral Measurements," *Health Phys.* 18, 685-91 (1970).

10. V. P. Grigorov, *Approximate Method of Calculating Alpha-Radiation Spectra from Thick Emitters*, Gosudarstvennyi Komitet po Ispol'zovaniyu Atomnoi Energii SSSR, 1963.

11. N. K. Abrosimov and G. E. Kocharov, "The Effect of the Thickness of the Source on the Shape of the Energy Distribution and Angular Distribution Curves of α-Particles," *Izvest. Akad. Nauk S.S.R., Ser. Fiz.* 26, 237-44 (1962)(In Russian).

12. E. B. Ershov, A. A. Karan, and V. P. Shamov, "On the Problems of Energy Distribution of Alpha Particles Emitted from a Thick Source," *At. Energ. (USSR)* 18, 519-20 (1965)(In Russian).

13. V. P. Grigorov, "Matrix Method of Calculations of Alpha-Ray Spectrum of Thick Sources," *At. Energ. (USSR)* 21, 517-18 (1966) (In Russian).

14. I. Chudácek, "Energy Spectrum of α Particles Emitted from Sources of Different Thickness," *Czechoslov. J. Phys.* 8, 396-403 (1958) (In English).

15. M. Movchet, M. Boulloud, and M. Gasc, *Study of the Variation of the Efficiency of α Emitting Sources as a Function of the Nature of the Support and the Applied Threshold*, CEA-2128, Commissariat a l'Energie Atomique Centre d'Etudes Nucléaires, Saclay (1962).

16. C. P. Browne and T. A. Eastwood, "Comparison of Alpha-Particle Energies from Various Po^{210} Sources," *Phys. Rev.* 124, 1494-6 (1961).

17. A. T. Kazakevich and V. M. Surin, "Application of Autoradiography for Control of Irregularity of Actinide Element Layers," *At. Energ. (USSR)* 21, 132-4 (1966)(In Russian).

18. G. A. Dupetit, "Preparation of Neptunium Targets by Electrodeposition," *J. Inorg. Nucl. Chem.* 24, 1297-8 (1962).

19. M. Ader, J. Debiesse, and T. Kahan, "Study of the Radiation of Polonium Sources with Photographic Plates," *Compt. rend.* 234, 827-8 (1952).

20. C. J. Kershner, *Self-Absorption and Energy Spectrum Distortion of Alpha Particle Emission from Microspherical Sources*, MLM-1655, Mound Laboratory (August 1969).

21. G. L. Cano, *Energy Loss and Resultant Charge of Recoil Particles from Alpha Disintegrations in Surface Deposits of* ^{210}*Po and* ^{241}*Am* (Thesis), University of New Mexico, 1964.

22. R. A. Fluegge, *A Study of Alpha Particle Reactions in Atmospheric Gases*, NYO-5708-2, Cornell Aeronautical Lab., Inc. (November 1966).

23. P. J. Walsh and D. I. McRee, "Depth-Dose Curves for α Particles from Area Sources and Point Sources," *Health Phys.* 20, 352-3 (1971).

24. G. Scarpa, "Dosimetry of a Flat Circular ^{210}Po α Source," *Minerva Fisiconucl.* 13, 109-20 (1969)(In Italian).

25. W. S. Diethorn, "Stability of Bare ^{210}Po Sources," *Intern. J. Appl. Radiat. Isotop.* 16, 705-10 (1965).

26. D. Yeates, S. Harris, and C. Doust, "Study of the Angular Distribution and Energies of Alpha Particles Emitted by ^{241}Am Sources," *Nucl. Instrum. Methods* 80, 320-4 (1970).

27. R. E. Greene, private communication.

USES OF ALPHA SOURCES

Because of the limited range and high specific ionization of alpha particles, most of the applications of alpha sources, other than standard or reference sources, are associated with gaging applications or ionization of gases. Gardner and Ely[1] have discussed several principles used in alpha-particle gaging applications. These include the ion-gage principle — the amount of current produced in a gas; the energy principle — the residual energy of alpha particles after they pass through a sample; the range principle — the number of alpha particles that traverse a sample; as well as the energy spectrum principle of alpha sources, which makes them useful in digitizing mechanical sensors.

In the ion-gage principle the amount of ionization produced by an alpha sources is related to the pressure of the gas being measured, the principle being the same as that used in conventional ion gages for pressure

measurement. The filament of the conventional ion gage is replaced with an alpha source, and the major advantages of this type of gage are (1) no filament to burn out, (2) no possibility of a chemical reaction between the gas being measured and the filament, and (3) the source of ionization is very constant and not subject to the normal power supply instabilities of filaments. This radiogaging principle has the primary advantage that very high "equivalent" counting rates can be obtained with an ionization chamber; its main disadvantage is that only mean-level or analog output is possible and thus it is inherently less stable and less versatile than the pulse-counter detectors used with the range principles of alpha radiogaging. Since ion currents vary as a function of gas composition, analysis of binary gas compositions can also be made.

The energy principle involves the amount of ionization energy remaining after an alpha particle has passed through a gas, liquid, or solid. Operating in the mean-level or current-output mode, an ionization chamber gives an output current proportional to the residual amount of ionization current that is deposited in the chamber. This type of gage can be used to measure thin film thicknesses, temperature, gas density, and composition of binary mixtures.

The range principle is a basis for gaging that offers extreme sensitivity over a narrow range of density-thickness when monoenergetic alpha particles are used. The principle can be used to measure film thickness and gas density, temperature, and pressure; however, the measurement range is extremely limited. Two possible ways to extend the measurement range with this method are changing the source-to-detector distance or changing the gas pressure or density between the source and detector.

Several types of gages using alpha sources are described briefly.

References

1. R. P. Gardner and R. L. Ely, Jr., *Radioisotope Measurement Applications in Engineering*, pp. 287-302, Reinhold, New York, 1967.

Gas Pressure and Density Gages

The pressure range of ionization gages using radioactive sources has been demonstrated by Andrieux and Iapteff[1] with the Alphavac-500 ionization gage which provides pressure measurements between 5×10^{-4} and 1000 torr with a precision of ±3%. The radiation alpha source is ^{241}Am. The gage comprises two sections, one for pressures between 5×10^{-4} and 1 torr, and one for pressures of 1 to 1000 torr.

A British patent[2] awarded to Boiziau describes a radioactive source ionization pressure gage for measuring pressures from 0.75×10^{3} to 0.75×10^{-4} mm of Hg. The gas, whose pressure is to be measured, is admitted to an enclosure, and alpha particles from the plutonium source ionize the gas.

An ionization chamber measures the number of ions, which is directly proportional to the gas pressure.

The Applied Physics Service of the Saclay Nuclear Studies Center (French Atomic Energy Authority) has designed and built a manometer with a radioactive source, known as Pluton.[3] The instrument, using a ^{240}Pu alpha source (half-life 6540 years), gives a linear response and continuous measurements with a single measuring head. It is safer than manometers using radium and can be used in an ultravacuum system. All parts are metal and can be heated to 300°C.

Many of the alpha source gages for measuring pressure or density of gases are associated with aeronautics and planetary atmosphere studies. Howard, Nelson, and Winckler[4] have described an alpha-particle pressure gage for use on very high altitude constant-level balloon flights. The instrument gives continuous readings from sea level pressure to pressures less than 1 millibar with an accuracy in the 1 to 10 millibar range of a few tenths of a millibar. A sensitive electrometer measures the ionization current from a very weak polonium alpha source containing less than 1 μCi. Pressure is read out by the time interval between resets of the drifting electrometer in a form convenient for radiotelemetering. Temperature correction is made so that the instrument measures with suitable accuracy pressure at temperatures between -25 and +25°C. The instrument has been tested on more than 50 balloon flights and gives reproducible and accurate results.

Gilly,[5] first in a laboratory test, and then with Jourdan[6] in a balloon test studied the determination and stabilization of altitude using alpha sources and semiconductor detectors. A thick enriched uranium source, 90% ^{235}U, was used with a detector for determining altitude, and ^{241}Am was used with another detector for stabilizing altitude. In a stratospheric balloon test the results were identical with those given by a barometer.

Gilly and coworkers[7,8] have also developed a machmeter using semiconductor detectors and ^{241}Am alpha sources. Pulses from each of the detectors are amplified and dispatched in two electronic chains into a simplified calculator which gives the mach number. It is possible to associate electronic chains for obtaining separate information on both altitude and mach numbers, and the acquired information can also be used for stabilizing altitude. With the two sources used, the one source and detector unit gives the static pressure and the second unit gives information on the impact pressure.

Sellers and Morel[9] have described a design and development program to determine the feasibility of using a radioisotopic source and detector as the basic sensing unit in an altimeter setting indicator capable of operating up to 10 digital displays and having an error equivalent to no more than ±0.005 in. Hg. The isotopic source is ^{241}Am, and the basic parameter measured is density. In making pressure measurements by direct sensing with such a unit, it is necessary either to place the unit in a controlled temperature enclosure that is connected to the point at which the pressure is to be measured or to monitor the temperature of the enclosure and use that information along with the density to calculate

the pressure. The temperature must either be controlled or measured to an accuracy of about ±0.02°C to meet the designed objective on pressure. A temperature-controlled enclosure was used.

Hanser and Sellers[10] have conducted a feasibility study of alpha-particle densitometers for measuring planetary atmospheric density. The system uses an alpha source, e.g., ^{241}Am, separated from a detector by a fixed distance, with the gas under study reducing the alpha energy. Two variants of the system are (1) the thin source system, which uses a monoenergetic alpha source and measures the average energy loss and (2) the thick source system, which uses a broad-spectrum source and measures the count rate above a fixed threshold. For either system used in combination with CO_2, N_2, and Ar — the components thought to be significant in the Martian atmosphere — the density, ρ, is given by

$$\rho_{gas} = \rho_{CO_2} + \rho_{N_2} + 0.67\rho_{Ar} .$$

The thin source system gives greater accuracy at high densities, while the thick source system can have an accuracy adjusted to be better at low densities. Use with an x-ray attenuation system would allow the values of ρ_{CO_2}, ρ_{N_2}, and ρ_{Ar} to be determined separately. When no composition information is available, the alpha particle system should measure the density of the Martian atmosphere to ±8%. If the composition is known, the error may be decreased to ±2%.

The use of alpha emitters for measuring gas density or pressure not necessarily related to aeronautics and space studies have been described by several investigators.[11-15]

References

1. P. Andrieux and B. Iapteff, "Improvement of Ionization Gauges Employing a Radioactive Source: L'Alphavac 500," Proc. of the Fourth International Vacuum Congress, Manchester, England, April 1968, pp. 675-8, London, Institute of Physics and Physical Society, 1969 (Conf. 680401)(In French).

2. C. Boiziau, "Improvements in or Relating to Radioactive-Source Ionization Pressure Gages," British Patent 1,066,687, Apr. 26, 1967 (Priority date Aug. 6, 1964), France, assigned to Commissariat a l'Energie Atomique.

3. C. Boiziau, "Radioactive Source Manometer," *Vide* 116, 100-8 (1963).

4. R. L. Howard, S. W. Nelson, and J. R. Winckler, "Alpha Particle Pressure Gauge for High Altitude Constant Level Balloon Flights," *Rev. Sci. Instrum.* 39, 1013-8 (1968).

5. L. Gilly, *Determination and Stabilization of the Altitude of an Aircraft Using a Semiconductor Detector*, CEA-R-3281 (November 1967).

6. L. Gilly and P. Jourdan, *Testing in a Stratospheric Balloon a Semi-Conductor Detector Altimeter*, CEA-R-3516 (June 1968).

thus allowing the construction of a compact probe to facilitate measurements in confined places, e.g., in connection with warehouse ventilation problems. The hygroscopic film is specially made from sulfonated cross-linked polystyrene and mounted on a vane rotated by a miniature electric motor. Rotation of the vane alternates the hygroscopic film with an otherwise similar nonhygroscopic one in the source-detector gap, thus providing a means of compensating for changes in temperature and pressure of the air in the gap and for detector temperature. The rotation also ensures the necessary circulation of air in the immediate proximity of the hygroscopic film. The output provides for continuous direct or remote indication, servo control, or recording.

New possibilities for the determination of the humidity content of wet steam in steam turbines using radioactive isotopes has been discussed by Csom and Benedek.[2] The relationship between the flow rates (stagnant and flowing wet stream) of two-phase mediums and steam humidity was investigated. They studied the theoretical problems of two measuring methods — measuring the energy of ^{239}Pu alpha particles and compensation measurement of the range of ^{239}Pu alpha particles. They concluded that both procedures are usable for steam at pressures from 0.03 to 1.5 atm with an error of about ±0.4 to ±1.1% humidity.

Kobayashi[3,4] has devised a method of determining dew point based on the principle that the absorption of alpha particles by the deposited dew weakens the ionization current. The cooled disk on which the dew is to be deposited is coated with an alpha emitter, and an ionization chamber measures the ionization current. The intensity of the ionization current and the surface temperature of the disk are recorded against time. The temperature at which the ionization current undergoes a rapid decrease determines the correct dew point. The method is indicated to be free from the errors that arise from supersaturation of water vapor and incidental risk of disk temperature from illumination.

References

1. H. K. Hallowes and A. E. Hodgson, "An Alpha-Particle Hygrometer," in *Radioisotope Instruments in Industry and Geophysics*, Proc. of the Symposium on Radioisotope Instruments in Industry and Geophysics held by the International Atomic Energy Agency in Warsaw, October 18-22, 1965, Vol. I, International Atomic Energy Agency, Vienna, 1966, STI/PUB/112 (Conf. 651023-8).

2. G. Csom and S. Benedek, "New Procedures for Humidity Measurements of Wet Steam by Means of Radioactive Isotopes," *Waerme* 76(5), 130-5 (1970) (In German).

3. H. Kobayashi, "Dew-Point Hygrometry by the Use of Radioactive α Source," *Sci. Pap. Inst. Phys. Chem. Res. (Tokyo)* 57, 169-72 (1963).

4. H. Kobayashi, "Dew-Point Hygrometry Below 0°C by the Use of a Radioactive α Source," *Sci. Pap. Inst. Phys. Chem. Res. (Tokyo)* 58, 106-10 (1964).

7. L. Gilly, P. Jourdan, and P. Denis, *Mach Meter Using Semiconductor Detectors for Nuclear Radiation*, CEA-R-4107 (January 1971).

8. L. Gilly, "Nuclear Machmeter," *Aeronaut, Astronaut (Paris)* 27, 23-34 (1971).

9. B. Sellers and P. Morel, *Design and Development of an Isotopic Altimeter Setting Indicator*, FAA-RD-69-38 (Vol. 1 and 2), Panametrics, Inc. (June 1969). Same as AD-696961 (Vol. 1) and AD-696581 (Vol. 2).

10. F. A. Hanser and B. Sellers, *Feasibility Study of Alpha Particle Densitometers for Measuring Planetary Atmospheric Density, Final Report, July 1968-May 1969*, N-69-38649, Panametrics, Inc. (June 1969). NASA-CR-66825; also summarized in *Isotop. Radiat. Technol.* 8, 185-6 (Winter 1970-1971).

11. W. Brandt, M. D. D'Agostino, and A. J. Favale, "Alpha-Particle Densitometer with Variable Response," *Nucl. Technol.* 11(1), 99-104 (1971).

12. A. M. Nechushkin, P. M. Belash, V. F. Belov, and A. L. Sarkisov, "Semiconductor Pressure Transducers for Gas Mixtures," translated by J. Bradley from *Izv. Vyssh. Ucheb, Zaved, Neft. Gaz.* 7(11), 89-91 (1964), SLAC-trans-43, Stanford Linear Accelerator Center.

13. R. Dagnac, "Vacuum Gauges Using Radioactive Sources Emitting Alpha Rays or Beta Rays," *Vide* 19, 135-40 (1964), bibliographic review in French.

14. Ya. Yu. Rebo and D. N. Ziv, "The Use of Alpha Emitters for Measuring Gas Density," translated from *Trudy Vsesoyuz. Nauch., Tekh. Konf. Primenen. Radioaktiv. i Stabil. Izotopov i Izluchenii v Narod. Khoz. i Nauke*, Moscow, 1957 (1958). Mashinostr. i Priborostr., pp. 280-5, AEC-tr-4492, pp. 322-8.

15. R. N. Brown, D. Balber, and G. V. Rylsky, "Device for Measuring Gas Pressure by Means of Alpha Particles," U.S. Patent No. 3,141,970, July 21, 1964 (filed May 15, 1961); assigned to General Precision, Inc.

Relative Humidity Gages

Hallowes and Hodgson[1] have developed an alpha-particle hygrometer for measuring the relative humidity of air by the transmission of alpha particles through a very thin film containing an equilibrium proportion of moisture. The scope of application is similar to that of electrical hygrometers in which the conductivity of a hygroscopic surface layer is measured. However, the employment of the alpha-particle technique greatly reduces the interferences from traces of sulfur dioxide and the like in the air. The method provides a rapid response and covers the full range of relative humidities at normal atmospheric temperatures. The radioactive source is ^{241}Am. The detector is a small surface-barrier semiconductor,

Thickness Gages and Other Measurement Devices

Howe,[1] in a critical survey of methods for determining film thickness applicable to nuclear measurement targets, has described several devices, including an alpha-particle thickness monitor, for weight determination of enriched stable-isotopic and natural targets. Each device is discussed briefly, and measurement capacities, accuracy, and approximate cost of each are given.

In a short survey, Moret[2] has described the most commonly used methods of thickness measurements, with emphasis on those used at Euratom. Several methods are described briefly and include that of absorption of alpha particles.

Adair[3] in a recent conference discussed the use of alpha particles and fission fragments for measuring target thickness and uniformity of samples varying in areal density from a few micrograms per square centimeter to several milligrams per square centimeter. Alpha particles from an ^{241}Am source pass through a 1-mm aperture and impinge on the target foil. The energy of the attenuated alpha beam is determined by observing the alpha energy shift in a calibrated multichannel analyzer system. From the stopping power data, the target thickness can be determined.

At this same conference Moret and Verheyen[4] discussed alpha absorption as one of several methods for assay of samples for nuclear measurements by physical methods. The various methods are compared.

In Japanese work Teranishi[5] has described the measurement of the thickness of thin polymer films with a semiconductor alpha-particle detector, and Nonaka and Sugai[6] have described improvements over an earlier gage. By using a larger ^{241}Am source, accuracies of the measurements were much improved.

A patent[7] on an apparatus for measuring the thickness of a substance by determining the shift in the energy spectrum of alpha particles passing through the substance has been awarded to Anderson. The apparatus includes an alpha source and semiconductor junction diode detectors. Electrical integrating and comparing means are used to determine the thickness of the substance by comparison with the energy transmitted by samples of standard thicknesses.

An application of Rutherford scattering to target thickness measurements has been reported by Burke and Tippett.[8] Alpha particles from an ^{241}Am source were scattered from thin foils, and the counting rate of these scattered particles was used to determine the foil thickness. The method is particularly suitable for target materials of high atomic number that have been deposited on supporting foils of low atomic number.

Lewis[9] has described an alpha-particle thickness gage suitable for surface densities up to 13 mg/cm^2. The energy loss of 8.78-MeV alpha particles traversing target foils is related to surface density when a simple empirical

formula is used. The 8.78-MeV alpha particles from the decay of ^{212}Po, produced in the decay of ^{228}Th (1.91-year half-life) to ^{208}Pb, were used for this work. The results suggest that accuracies of better than 5% can be achieved.

Other investigators have also used alpha gages to measure weights per unit area of thin materials.[10-12] Although all of these cited used ^{226}Ra as the alpha source, it appears that ^{241}Am might be used in some alpha weight measuring gages. The intensity and half-life of ^{241}Am are adequate for this type of gaging, but its alpha energies are less than those of some of the daughters of ^{226}Ra, thus the upper limits of thicknesses capable of being measured would be less for the ^{241}Am.

The smoke detector might also be considered an alpha gage. These instruments use an ionization chamber containing an alpha source, e.g., ^{241}Am, of about 10 to 100 μCi. When even a very small amount of smoke enters the ion chamber the current passing through the chamber is reduced. The combustion products may be of particles too small to be visible as smoke, but they are detected nevertheless. Two ionization chambers — source units are frequently used — one is open to allow passage of smoke particles and the other, which serves as a reference, is virtually closed. The two chambers are connected with appropriate circuitry that activates an alarm when smoke enters the open chamber. These detectors using alpha sources have been described in several papers[13-16] and two patents.[17-18]

Bettenhausen and Gallagher[19] have developed an alpha-particle voltmeter. The instrument measures the energy increment added to the known energy of alpha particles from a ^{210}Po source as the alpha particles pass through the electric field produced by a voltage difference. The meter measures voltages in the range of 10^5 to 10^6 V and can operate in high vacuum.

A patent has been awarded to Owen[20] for a borehole deviation detector that is essentially an inclinometer. A pendulum weight plate with a radioactive alpha source, e.g., ^{210}Po or ^{239}Pu, is suspended within a housing. Radiation detectors are mounted on the inner wall of the housing and measure the amount of radiation received from the pendulum. As the housing is inclined with the borehole, different amounts of radiation will be received by each detector, and direction and deviation from the vertical can be determined. A spring mechanism is provided for damping the pendulum. Various modifications of the instrument are also described.

References

1. F. A. Howe, "A Critical Survey of Methods for Determination of Film Thickness Applicable to Nuclear Targets," Proc. of the Seminar on the Preparation and Standardisation of Isotopic Targets and Foils, Harwell, Oct. 20-21, 1965, pp. 123-7, M. L. Smith (ed.), AERE-R-5097 (December 1965)(Conf. 651055).

2. H. Moret, "Thickness Measurement and Mass Determination of Evaporated Layers," Proc. of the Seminar on the Preparation and Standardisation of Isotopic Targets and Foils, Harwell, Oct. 20-21, 1965, pp. 128-34, M. L. Smith (ed.), AERE-R-5097 (December 1965)(Conf. 651055).

3. H. L. Adair, "Target Thickness and Uniformity Measurements Using Charged Particles," Proc. of the Third International Symposium on Research Materials for Nuclear Measurements, Gatlinburg, Tennessee, Oct. 5-8, 1971, pp. 307-20 (Conf. 711002).

4. H. Moret and F. Verheyen, "Assay of Samples for Nuclear Measurements by Physical Methods," Proc. of the Third International Symposium on Research Materials for Nuclear Measurements, Gatlinburg, Tennessee, Oct. 5-8, 1971, pp. 272-82 (Conf. 711002).

5. K. Teranishi, "Measurements of the Thickness of Thin Polymer Films With a Semiconductor α-Particle Detector," *Nucl. Eng. (Tokyo)* 11, 49-56 (1965).

6. I. Nonaka and I. Sugai, *Alpha-Ray Thickness Gauge*, INS-TL-112 (July 8, 1971)(In Japanese).

7. H. L. Anderson, "Thickness Measurement Using Alpha Particles," U.S. Patent 3,193,680, July 6, 1965 (filed Oct. 6, 1960).

8. D. G. Burke and J. C. Tippett, "An Application of Rutherford Scattering to Target Thickness Measurements," *Nucl. Instrum. Methods* 63, 353-4 (1968).

9. V. E. Lewis, "An Alpha-Particle Thickness Gauge," *Nucl. Instrum. Methods* 64, 293-6 (1968).

10. J. Perette and J. Maugest, "Use of Alpha-Radiation for the Industrial Measurement of Surface Weight," in *Radioisotopes in the Physical Sciences and Industry*, Proc. of a Conference on the Use of Radioisotopes in the Physical Sciences and Industry, Copenhagen, Sept. 6-7, 1960, Vol. 2, pp. 109-27, International Atomic Energy Agency, Vienna, 1962, STI/PUB/20.

11. T. A. Gray, "Alpha Radiation Gaging Techniques as Applied to Basis Weight Measurement," Technical Association of the Pulp and Paper Industry, 51st Annual Meeting, Feb. 20-24, 1966, New York, ORAU. Gmelin, Conf. 660213 (AED Conf. 66-042-1).

12. E. N. Shaw, "The Alpha Gauge," *Brit. Inst. Radio Eng.*, 414-8 (1954).

13. J. B. Dance, "Radioisotopes Speed Fire Detection," *Instrum. Pract.* 20(12), 975-8 (1966).

14. H. Carbonnel, *Low-Current Ionization Chambers for Fire Detection*, No. 58, Bureau Eurisotop, Brussels, Belgium (1970)(In French).

Presented at the Conference on Radiation and Isotope Techniques in Civil Engineering, Brussels, Oct. 28-30, 1970.

15. Zhdanov and Makarov, "Rapid-Action Fire-Alarm (Signaling) Unit," in *The Uses of Radioactive Isotopes and Nuclear Radiation in the USSR*, Vol. I. Proc. All Union Conf., Riga, April 12-16, 1960, pp. 127-30, L. I. Petrenko *et al.* (eds.), Moscow (1961), AEC-tr-6466/1, 1965 (Conf. 600402).

16. H. P. Halm, "Early Warning Device With Ionization-Fire-Alarm," *Z. Ges. Textilind.* 61(13), 522-4 (1959)(In German).

17. E. Meili and T. Lampart, "Ionization Fire Alarm System," U.S. Patent 3,353,170, Nov. 14, 1967 (filed Nov. 12, 1963), assigned to Cerberus AG, a corporation of Switzerland.

18. C. M. M. B. Ponsar, "Ionization Fire Detection Device," U.S. Patent 3,582,646, June 1, 1971 (filed Feb. 6, 1968), assigned to Vigifeu Aubervilliers, France.

19. L. H. Bettenhausen and W. J. Gallagher, "An Alpha-Particle Voltmeter," *Nucleonics* 22(6), 70 (1964).

20. J. D. Owen, "Borehole Deviation Detector," U.S. Patent 3,384,750, May 21, 1968 (filed May 25, 1964), assigned to Phillips Petroleum Company.

Ionization of Air

The excellent ability of alpha particles to ionize air has found particular use in three applications — elimination of static electricity, protection from lightning, and ionic conditioning of air. All three of these are made possible by the high specific ionization of alpha particles (up to 100,000 ion pairs per centimeter in air compared with a few hundred for beta particles).

Both the elimination of static electricity and the protection from lightning (also static electricity) operate on the principle that the air ionized by an alpha (or beta) source is conductive and thus allows the charge to leak away to ground.

Static Eliminators

Static electricity is a costly and troublesome hazard to both production processes and personnel. It can cause fires, explosions, production interruptions, poor product quality, lost time, and shocks to employees. Static eliminators have found use especially in the printing and textiles industries. Paper fed into printing presses may become charged as it passes between the guides and result in tearing unless the printing speed is limited. In the textile industry, fibers become charged by rubbing against the many nonconductive parts of the spinning and weaving equipment

causes additional ionization of the gases, the net effect being to create an ionized cloud around the unit that will provide a path for the lightning to the rod where it will be grounded. At the present time, eight ^{241}Am sources are provided on each electrode, and it is claimed to protect an area within a radius of 250 meters.

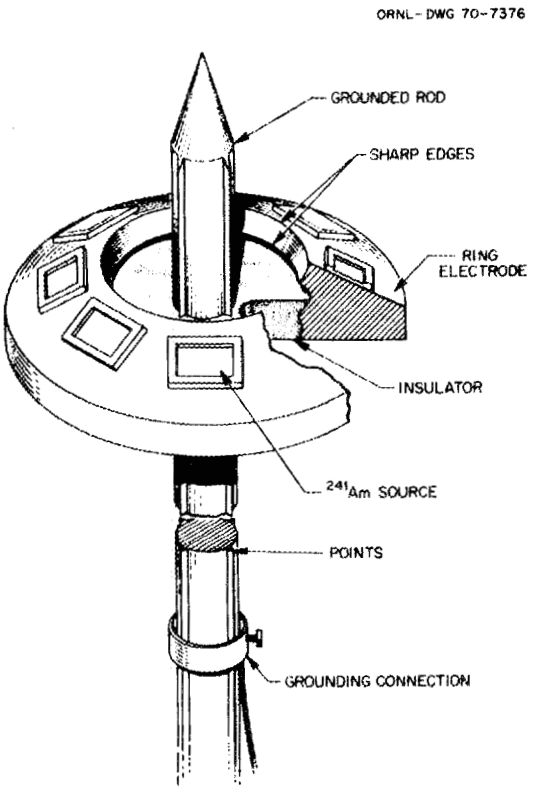

Fig. 1. Schematic Diagram of E.F. Lightning Rod.

The ionizing effect of an excellent Franklin installation was compared with that of an E.F. installation during periods of stormy weather in 1964. The measurements were taken on the Concord building (64 meters) in Toulon, France. Under all trial conditions the E.F. installation, connected on the same ground plate as the Franklin unit, at the same gradient values gave an approximate rate of ionization 10^4 times that of the Franklin unit.

In such regions as Italy and the Spanish Peninsula — examples of European countries most affected by lightning — entire units of telecommunication systems, networks of electricity production and distribution, and fuel and gas systems, as well as a large number of important industries, such as Fiat, have adopted the E.F. system for lightning protection.

The Pierrelatte Plant for isotope separation in France has been protected since 1963 by 25 E.F. installations. This plant is situated in an area particularly prone to lightning. The French Commissariat a l'Energie Atomique has adopted the E.F. system to assure the protection of its plants at Fontenay-aux-Roses and Chinon. The French Electric Power Authority has also chosen this type of protection for its nuclear plant at St. Laurent des Eaux. The Italian government assures the protection of its nuclear plants of Saluggia and Garigliano with the E.F. system, as Euratom has done for its Ispra plant.

A recent Euratom report[14a,b] lists eight European firms that make radioactive lightning rods and states that there are between 5 and 10 thousand such rods installed in Europe. Lightning rods containing alpha sources have also been described in *Electrical World*[15] and in an article by Marsicanin and Radosavljevic.[16]

and can remain charged for long periods of time. In the weaving process these fibers or threads left in the loom over night attract dust particles and cause what is called "fog marking" which reduces the value of the cloth. In the production of laminated glass sheets, which become charged during polishing, dust attracted by the glass mars the finished product unless precautions are taken to eliminate the dust collection.

Static eliminators can be either electrical or radioactive. The electrical types are used, but they have the disadvantage that they can produce shocks unless adequately protected and may produce sparking under certain circumstances and therefore cannot be safely used in inflammable atmospheres. While the radioactive static eliminators, which usually contain ^{210}Po, ^{226}Ra, or ^{241}Am, cannot cause shocks or sparks adequate precautions must be taken to prevent radiation hazards. Although the external radiation hazard is slight with the alpha emitters, care must be taken to prevent physical damage to the radiation source which might lead to ingestion or inhalation of active material. For this reason the radioactive static eliminators are usually covered either with a protective foil or grid. Nuclear static eliminators using alpha emitters have been described in several publications.[1-8]

Radioactive Lightning Rods

The use of alpha sources on lightning rods is becoming increasingly common, especially in Europe.[9-11] A Liechtenstein firm, General Protection Establishment, has recently improved[12,13] the Franklin lightning rod, using a theory developed by Szilard that air ionization by radiation would provide better protection than a standard Franklin rod. This rod is marketed under the name E.F. lightning rod. The letters E.F. stand for "électricité froide," which means cold, or low-energy, high-voltage electricity. The basic parts of the device (Fig. 1) are a stainless steel cylindrical rod having a sharp point at the top and several ridges running longitudinally down the rod, an annular electrode having sharp edges directed toward the rod, an insulator that separates the rod and the electrode, and several ^{241}Am sources* in the electrode.

When the device is in operation, the rod is grounded and the electrode assumes the potential of the atmosphere. Under thunderstorm conditions the potential gradient between the rod and the electrode reaches high enough values that there will be electrical discharges between the sharp edges of the electrode and the ridges of the rod. This discharge is, of course, aided by the ionization of the air caused by the alpha particles emitted by the radioactive sources. The electrical discharge

---

*C. G. Invernizzi, President, United States Radium Corporation (Europe), 36 Avenue Krieg, Geneva, a long-term proponent of radioactive lightning rods, has been largely responsible for studies of lightning protection by ionization of air and for the development of the special ^{241}Am sources for lightning protection.

Ionic Conditioning of Air

The ions in air that man breathes are believed to affect the feelings of well-being — positive ions having a detrimental effect while negative ions, particularly those of oxygen, fortify the feeling. Pollution of the air and even filtering of air for air conditioning remove negative ions from the air; therefore, restoration of negative ions appears desirable. This can be done with ion generators using alpha sources and Invernizzi[17] has described the "Energie Froide" ion generator. An ^{241}Am source capable of producing 5×10^9 ions/sec is the center of the system. The alpha particles generate both positive and negative ions; the positive ions are electronically collected and eliminated, and the negative ions are emitted to the ambient air. When used in locations where air is conditioned, the generators reestablish the ionic equilibrium. In polluted atmospheres, which are excessive in positive ions, they favor the precipitation of pollutants suspended in the air and tend to equilibrate the atmosphere in negative ions. Skilling and Beckett[18] have reviewed some of the earlier work in controlling air ion density in rooms using ^{210}Po alpha sources. A United States patent[19] describes the use of ^{210}Po in an ion controller, and a British patent[20] describes an ionized air-producing device using an alpha or beta emitter in a resin matrix.

Flow Measurement

Clayton[21] has reviewed the use of radioisotopes to induce ionization for gas-flow measurements. In most of the applications which use alpha sources, the source and ionization detector are both placed in the gas stream to be measured. In one design, the source and detector are at the same location within a pipe. At low gas velocities most of the ions produced are collected by the applied field of the ionization chamber, but, as the gas velocity increases a higher proportion of ions produced is swept out of the chamber region. Thus, the current decreases with an increase in gas velocity. In another application the source is located upstream of the detector. At low flow rates the ions produced in the source region move downstream toward the ionization chamber but recombine before arrival. As the flow rate is increased ions begin to arrive at the electrodes, and the collector current then continues to increase with increasing flow rate. If the variation in gas composition is not sufficient to affect the ionization seriously, the instrument is capable of being calibrated to measure mass flow.

Lafferty,[22] in a review on the determination of flow using radioisotopes, also briefly discusses the measurement of gas flows using alpha sources.

References

1. D. Taylor, "Radioactive Static Eliminators," *Ind. Electron.* 1, 717-9 (1963.

2. R. N. Walz, "Nuclear Static Eliminators Design and Development," from 6th Annual Packaging Industry Technical Conference, Hartford, Conn., May 1966, ORAU. Gmelin (Conf. 660549) (AED Conf. 66-141-1).

3. F. J. Miller and P. S. Baker, *Radioisotopes and Radiation in the Textile Industry*, ORNL-IIC-29, Oak Ridge National Laboratory (February 1972).

4. J. L. Putman, "Static Elimination," AERE Radioisotope Review Sheet A6, October 1963.

5. J. C. Legrand, "Elimination of Static Charges in the Textile, Paper, Rubber, and Plastics Industry with a Source of Ionizing Radiation," *Bull. Inform. A.T.E.N. (Assoc. Tech. Energ. Nucl.) Suppl.* 68, 6-11 (November-December) (In French).

6. P.S.H. Henry, "Radioactive Static Eliminators — The Present Position," *Text. Inst. Ind.* 1, 23 (April 1963).

7. I. A. Polonik, "Nuclear Radiation as a Means of Air Ionization for Neutralizing Electrostatic Charges in the Processing of Synthetic Fibers," in *The Uses of Radioactive Isotopes and Nuclear Radiation in the USSR*, Vol. 2, Proc. All Union Conf., Riga, April 12-16, 1960, pp. 50-4, P. I. Antyshev *et al.* (eds.), Moscow (1961), AEC-tr-6466/2, 1966.

8. I. V. Romeikov and A. V. Vladimirov, "Radioactive Isotope Method of Removing Static Electricity Charges," *Poligrafiya* 1, 29-30 (1965) (In Russian).

9. G. Berio, "The Use of Ionization in the Air for Lightning Protection," *Isotop. Radiat. Technol.* 8, 178-80 (Winter 1970-71).

10. G. Berio, *The Use of Ionization of Air for Protection from Lightning*, No. 46, Bureau of Eurisotop, Brussels, Belgium (1970) (In French). Presented at the Conference on Radiation and Isotope Techniques in Civil Engineering, Brussels, Oct. 28-30, 1970.

11. C. G. Invernizzi, "Air Ionization Used for Lightning Protection," *Trans. Amer. Nucl. Soc.* 14(2), 469-70 (1971).

12. K. Ritter, "Lightning Rod with Ionizing Field," U.S. Patent No. 3,328,508, June 27, 1967 (Filed March 14, 1966), assigned to General Protection Establishment, Liechtenstein.

13. K. Ritter, "Lightning Rod with Great Ionizing Power," U.S. Patent No. 3,350,496, October 31, 1967 (filed March 14, 1966), assigned to General Protection Establishment, Liechtenstein.

14. J. Delhove, *A Study of the Radiological Aspects of the Manufacture and Use of Radioactive Lightning Conductors*, EUR-4292.f, Euratom, Brussels, Belgium (1970) (In French).

J. Delhove, "Study of Radiologic Aspects Connected with the Manufacture and Use of Radioactive Lightning Rods," *J. Belge Radiol.* 52, II-VII (1969).

15. "Lightning Rods Go Radioactive," *Elec. World* 173(3), 36-7 (January 19, 1970).

16. B. Marsicanin and Z. Radosavljevic, "New Radioactive Lightning Protection," *Isotopenpraxis* 5, 399-403 (1969).

17. C. G. Invernizzi, *Ionic Conditioning of Air*, No. 53, Bureau Eurisotop, Brussels, Belgium (1970) (In French). Presented at the Conference on Radiation and Isotope Techniques in Civil Engineering, Brussels, October 28-30, 1970 (Conf. 701027). Translated by H. Warren, ORNL-tr-2427, Oak Ridge National Laboratory.

18. H. H. Skilling and J. C. Beckett, "Control of Air Ion Density in Rooms," *J. Franklin Inst.* 256(5), 423-34 (1953).

19. W. W. Hicks, "Ion Controller," U.S. Patent No. 2,640,158, May 26, 1953 (filed Jan. 30, 1952), assigned to Ionics, Inc.

20. J. Asahina, "Ionized Air-Producing Device," British Patent 1,059,417, Feb. 22, 1967, priority date Dec. 30, 1963, Japan.

21. C. G. Clayton, "Measurement of Flow of Liquids and Gases Using Radioactive Isotopes," *Isotop. Radiat. Technol.* 4, 93-108 (Winter 1966-67).

22. R. H. Lafferty, Jr., "Flow Measurements with Radioisotopes," *Isotop. Radiat. Technol.* 8, 287-309 (Spring 1971).

Analytical Applications

An interesting application[1] of alpha sources is their use in determining the chemical composition of the lunar surface. The method is based on two of the classical experiments associated with the name of Lord Rutherford — the scattering of alpha particles and the transmutation of matter where it was shown that protons are produced by nuclear reaction when alpha particles hit atoms of certain elements (nitrogen in this case). The instrument used on several Surveyor missions determined the composition of the surface from the energy of scattered alpha particles and of the protons produced by the (α,p) reaction with some of the elements present. The instrument is packaged in a box ($\sim$15 cm on a side and open at the bottom) that is lowered from the landed space craft to the surface of the moon by a string. The box contains six alpha source capsules of ^{242}Cm designed to collimate the alpha particles so that they strike the lunar surface. Of the alpha particles striking the surface a very small number are reflected back and registered on two silicon detectors. From the number and energy of the alpha particles returning to the detectors, the chemical elements and the amount present in the sample under study can be determined.

Other alpha particles, on striking the sample, produce protons, and these are registered on four proton detectors that are larger than the alpha detectors and are covered with gold foils so the alpha particles will not be recorded. The electronic system determines the energy of the protons coming into the detectors. The entrance of each particle, alpha or proton, into the appropriate detector and information about its energy is transmitted immediately to earth. The redundancy in the number of detectors is necessary because these silicon detectors are somewhat unreliable particularly at high temperatures.

In the alpha mode the Surveyor has good resolution for the light elements and rather poor resolution for the heavier elements. The minimum sensitivity of the alpha mode is in the region of Na, Mg, Al, and Si, but fortunately, these elements with the minimum of the alpha scattering sensitivity, produce protons with reasonable yield and characteristic spectrums. The heavier elements, as well as carbon and oxygen, do not produce protons. The elements of primary interest and those that almost certainly comprise the bulk of the lunar surface are O, Na, Mg, Al, Si, Ca, Ti, and Fe. The method and results of lunar analyses have been described in several papers.[2-11]

Another application of alpha sources in space work is in the Gemini carbon dioxide sensor,[12] an instrument for monitoring CO_2 partial pressure in a closed-loop breathing system. In the operation of the sensor, the air stream under test is divided into two substreams. One, a reference stream, passes through an absorber that removes CO_2. The other, the measurement stream, passes through a passive filter that does not remove the CO_2. Both streams then pass through identical ion chambers each of which contains an alpha source of ^{241}Am. Since CO_2 ionizes more readily than O_2, the ion current from the measurement stream will be higher than that from the reference stream. The ion currents are subtracted by a bridge circuit, and the difference flowing in the common leg of the bridge is proportional to the amount of CO_2 in the measurement stream. Results from ground and airborne use indicate the device to be reliable, rugged, and easy to use. The basic concept can also be adapted to the detection of other gases by providing an adequate substitute for the ascarite, the absorbing material for the CO_2.

From data obtained from basic experiments, two radioisotope methanometers were designed and manufactured and have been described by Matsuguma and Oba.[13] One of these is for 0 to 100% methane and the other for 0 to 10% methane, both having almost the same structure and electrical circuits. This methanometer, contained in an explosion proof case, consists mainly of two ionization chambers, a dc amplifier, power supply and alarm circuit. Its output, which is indicated on a microammeter (0-100 μA) scaled in methane percent, can also be connected to a self-balancing type electronic recorder. An alpha-emitting source is used in each ionization chamber, 100 μCi of Ra(D + E + F) is used.

A patent has been awarded to Coffey and Rich[14] on a gas conversion apparatus and a method for producing condensation nuclei. The invention relates to the detection and measurement of a chemically reactive gas

such as ammonia dispersed in a relatively chemically inert gas such as air. The gas mixture is exposed to a radioactive material, e.g., ^{210}Po, which emits ionizing radiation and ionizes the gas. The ionized gas is then treated with a chemical reagent vapor to produce condensation nuclei from the chemically reactive gas which are suspended in the carrier gas. The condensation nuclei are counted in a conventional condensation nuclei counter.

Nechushkin *et al.*[15] have investigated the possibility of using semiconductor radiation counters together with alpha sources in the measurement of pressure and percentage composition of gas mixtures.

Plaksin, Smirnov, and Starchik[16,17] have used ^{210}Po alpha radiation for quantitative control in products contianing Be, B, F, and Al. Two methods of analysis were used — counting neutrons from the (α,n) reaction and alpha activation analysis. For determination of Be, B, and F in products, the nuclear reactions $^{9}Be(\alpha,n)^{12}C$, $^{11}B(\alpha,n)^{14}N$, and $^{19}F(\alpha,n)^{22}Na$ were used. The number of neutrons is proportional to the Be, B, and F content. A ^{210}Po alpha source of 120 mCi activity was used for activation analysis of Al and B using the reactions $^{27}Al(\alpha,n)^{30}P$ and $^{10}B(\alpha,n)^{13}N$. The induced radioactivity was measured with an end-window counter. The separate determination of B and Al was obtained from the differences in their maximum radiation energies and half-life periods. The accuracy of the determination is 2 to 3%.

The analysis of ores and minerals by means of the radioluminescence induced by the alpha radiation of ^{210}Po has been studied by Plaksin, Belyakov, and L. P. Starchik.[18] The weight of the cathodic luminescence devices widely used for the analysis of minerals makes them inconvenient to use in the field. On the other hand, alpha radiation sources, in particular ^{210}Po, are easy to handle. Polonium-210 emits only one gamma quantum for each 10^5 alpha particles, thus requiring little shielding. The visual analysis can be carried out very simply. A 1.8-Ci source was used successfully for observing the radioluminescence of calcite, dolomite, fluorite, scheelite, and beryl. Exposure to alpha radiation induced a strong radioluminescence in diamonds and enabled the use of alpha rays instead of gamma radiation for sorting them. The current generated was amplified by a factor of 10^4 to 10^5. The low penetration of this radiation simplifies the shielding problem.

References

1. A. L. Turkevich, J. H. Patterson, and E. J. Franzgrote, "The Chemical Analysis of the Lunar Surface," *Amer. Sci.* 56(4), 312-43 (1968).

2. J. H. Patterson, A. L. Turkevich, and E. J. Franzgrote, "Analysis of Light Elements in Surfaces by Alpha-Particle Scattering," in *Radioisotope Instruments in Industry and Geophysics*, Vol. 1, Proc. of Symp. in Warsaw, Oct. 18-22, 1965, pp. 337-45, E. Doyle (ed.), International Atomic Energy Agency, Vienna, 1966 (STI/PUB/112 Vol. 1) (Conf. 651023- Vol. 1).

3. A. Turkevich, K. Knolle, R. A. Emeert, W. A. Anderson, J. H. Patterson, and E. Franzgrote, "Instrument for Lunar Surface Chemical Analysis," *Rev. Sci. Instrum.* 37(12), 1681-6 (1966).

4. A. L. Turkevich, J. H. Patterson, and E. J. Franzgrote, "Chemical Analysis of the Moon at the Surveyor VII Landing Site: Preliminary Results," *Science* 160, 1108-10 (June 7, 1968).

5. A. L. Turkevich, E. J. Franzgrote, and J. H. Patterson, "Chemical Analysis of the Moon at the Surveyor VII Landing Site: Preliminary Results," *Science* 162, 117-8 (Oct. 4, 1968).

6. A. L. Turkevich, E. J. Franzgrote, and J. H. Patterson, "Chemical Composition of the Lunar Surface in Mare Tranquillitatis," *Science* 165, 277-9 (July 18, 1969).

7. J. H. Patterson, E. J. Franzgrote, A. L. Turkevich, W. A. Anderson, T. E. Economou, H. E. Griffin, S. L. Grotch, and K. P. Sowinski, "Alpha-Scattering Experiment on Surveyor 7: Comparison with Surveyors 5 and 6," *J. Geophys. Res.* 74(25), 6120-48 (Nov. 15, 1969).

8. E. J. Franzgrote, J. H. Patterson, A. L. Turkevich, T. E. Economou, and K. P. Sowinski, "Chemical Composition of the Lunar Surface in Sinus Medii," *Science* 167, 376-9 (Jan. 23, 1970).

9. J. H. Patterson, A. L. Turkevich, E. J. Franzgrote, T. E. Economou, and K. P. Sowinski, "Chemical Composition of the Lunar Surface in a Terra Region Near the Crater Tycho," *Science* 168, 825-8 (May 15, 1970).

10. T. E. Economou, A. L. Turkevich, K. P. Sowinski, J. H. Patterson, and E. J. Franzgrote, "Alpha-Scattering Technique of Chemical Analysis," *J. Geophys. Res.* 75, 6514-23 (Nov. 10, 1970).

11. D. Schmidt, "Instrumental Chemical Analysis of the Moon Surface by Unmanned Landing Devices," *Raumfahrtforschung* 11(1), 27-35 (1967) (In German). Presented at DGRR Symposium, Investigation of the Moon and Interplanetary Space, Munich, Apr. 22, 1966.

12. G. F. Vanderschmidt, J. S. Riley, and S. D. Cornish, "The Gemini Carbon Dioxide Sensor," in Proceedings of the First Symposium *Radioisotopes for Aerospace*, Dayton, Ohio, Feb. 15-17, 1966, pp. 358-75, J. C. Dempsey and P. Polishuk (eds.), Plenum Press, New York, 1966.

13. K. Matsuguma and S. Oba, "Development of Ri-Methanometer," *Saiko To Hoan* 12, 462-8 (September 1966) (In Japanese).

14. P. E. Coffey and T. A. Rich, "Gas Conversion Apparatus and Method for Producing Condensation Nuclei," U.S. Patent 3,522,431, Aug. 4, 1970 (filed Dec. 26, 1967), assigned to General Electric Company.

15. A. M. Nechushkin, P. M. Belash, V. F. Belov, and A. L. Sarkisov, "Semiconductor Pressure Transducers for Gas Mixtures," *Izv. Vyssh. Ucheb, Zaved, Neft. Gaz.* 7(11), 89-91 (1964), translated by J. Bradley, SLAC-trans-43, Stanford Linear Accelerator Center.

16. I. N. Plaksin, V. N. Smirnov, and L. P. Starchik, "Alpha Radiation in Automated Control of the Elementary Composition of Certain Ore Concentrates," in *The Uses of Radioactive Isotopes and Nuclear Radiation in the USSR*, Vol. 4, Proc. All Union Conf., Riga, April 12-16, 1960, pp. 300-7, L. I. Petrenko *et al.* (eds.), Moscow, 1961, AEC-tr-6466/4, 1966.

17. I. N. Plaksin, V. N. Smirnov, and L. P. Starchik, "The Use of Po^{210} Alpha Radiation for the Quantitative Control of Concentration Products Containing Beryllium, Boron, Fluorine and Aluminum," Tr. Tashkentsk. Konf. po Mirnomu Ispol'z. At. Energ., *Akad. Nauk Uz. SSR* 2, 193-299 (1960).

18. I. N. Plaksin, M. A. Belyakov, and L. P. Starchik, "Analysis of Ores and Minerals by Means of the Radioluminescence Induced by the α-Radiation of Polonium-210," *Atomnaya Energ.* 11, 548-9 (Dec. 1961) (In Russian).

Reference Alpha Sources

A few of the less common applications of alpha emitters as reference sources will be briefly described. Damle and Joseph[1] have used a radioactive pulse light source for in-flight calibration of a photomultiplier assembly that is used in the detection of high-energy neutrons in the atmosphere at balloon altitudes. The detector, a thin CsI(Tl) crystal 5 mm thick and 11-cm diameter was optically coupled to a 5-in. photomultiplier.

High-energy neutrons were detected by nuclear disintegrations produced by them in the detector; however, a good check on the gain stability of the detector was needed and some type of in-flight calibration was essential. Since none of the usual methods of calibration could be used an unconventional method, which consisted essentially of making a pulse light source produced by a collimated ^{241}Am alpha source kept on a thin CsI(Tl) disk, was used. Every alpha particle entering the disk produced a fixed amount of light which was isotropically propagated throughout the disk which glowed with the light. This pulsed light source was optically coupled to the detector using a silicone fluid. In essence the pulse light source replaced a standard radiation source. The new calibration method worked very satisfactorily during an entire 8-hr flight. Similar types of alpha source applications have been reported earlier by Hakewessell[2] and Fogt.[3]

Aleksandrov, Belyalskii, and Berkovich[4] have developed a method for fabrication of 21 different types of reference alpha sources with one or a mixture of different isotopes and for the determination of the basic physical characteristics of spectrometric sources in which the following isotopes are used: ^{233}U, ^{239}Pu, ^{241}Am, ^{238}Pu, ^{244}Cm, ^{242}Cm, and ^{228}Th.

These reference sources are designed for calibrating semiconductor alpha spectrometers and other spectrometric and counting apparatus. The alpha particles emitted by the source have a small energy scatter. The sources fall into three categories, depending on the "intrinsic half-width of the alpha lines": up to 10 keV, 10 to 20 keV, and 20 to 50 keV. Most of the sources fall into the first two categories. The energies of the alpha particles emitted by the reference sources were determined to within 2 to 5 keV. With the help of a precision magnetic alpha spectrometer, the shape of the alpha lines was investigated in the process of developing the method of manufacturing the source, and a constant check was kept on the energy shift of the alpha lines due to self-absorption and to energy losses from the film coating. The activities of the reference sources lie within the range of 3×10^2 to 3×10^5 dis/sec and are determined to within 2 to 4%. In most of the reference sources the layer of radioactive substance is firmly attached to the base, and in a number of cases covered by a film. The base consists of a metallic disk, and the diameter of the active spot is 12 mm. The fabrication process is also applicable to reference sources of ^{210}Po, ^{226}Ra, and ^{227}Ac.

Stepanov and Tyutikov[5,6] have used alpha radiation sources for the calibration and determination of the basic parameters of semiconductor type alpha spectrometers. These basic parameters include energy resolution, integral nonlinearity, time instability, and behavior with respect to frequency changes and amplitude overload. In view of the general unreliability of the previously used methods, a new technique based on the use of alpha sources was developed. The maximum of the amplitude pulse distribution of monoenergetic alpha particles served as reference. Tests were carried out with various alpha sources, such as ^{233}U, ^{239}Pu, and ^{241}Am, using a silicon surface-barrier detector and a ^{226}Ra source for reference. The effect of the source on the resolution was illustrated by a numerical example. The time instability was found to amount to 0.2% after 7 hr of operation. It was also found that frequency loading causes a drift of the energy spectrum of the alpha emitters.

Stocker *et al.*[7] in the comparison of the nuclear-reaction energy scale with the gamma-ray energy scale measured the excitation energy of the first excited state of ^{24}Mg with inelastic deuteron scattering using the energy of alpha particles from ^{210}Po as a standard. The result was 1368.2 ± 0.5 keV, and the average of recent measurements of the energy of gamma rays emitted by this state gives an excitation energy of 1368.67 keV based on the electron rest-mass energy. Thus, the widely used polonium calibration energy was found to be consistent with the gamma-ray energy standard to within 0.4%.

In the analysis of the lunar surface on the Surveyor missions (previously described) small adjustments of the energy scales of the spectrums were made to correct changes in instrument characteristics caused by temperature variations on the moon during measurement of a sample.[8,9] In the alpha mode, these variations were based on the observed variations in the position of an ^{254}Es (6.64-MeV alpha) calibration peak and on the prominent ^{16}O feature in the lunar spectrums. A small amount of ^{254}Es placed close to the detectors served as the energy marker. After the

energy-scale corrections were made, background spectra were subtracted from the lunar data.

References

1. S. V. Damle and G. Joseph, "Radioactive Pulse Light Source for In-Flight Calibration of Scintillator Photomultiplier Assembly," *Nucl. Instrum. Methods* 65, 123-4 (1968).

2. D. B. Hakewessell, "Measurement of Atmospheric Density Using Gamma Backscatter Techniques," in Proceedings of the First Symposium *Radioisotopes for Aerospace*, Dayton, Ohio, Feb. 15-17, 1966, pp. 1-17, J. C. Dempsey and P. Polishuk (eds.), Plenum Press, New York, 1966 (Conf. 660207, Pt. 2).

3. P. N. Fogt, "Fluctuation During Stabilization of Amplification of Scintillation Counters by Using an α-Source for Reference Pulses," *Sb. Geofiz. Priborostr.* 19, 53-60 (1964) (In Russian).

4. B. M. Aleksandrov *et al.*, "Reference Spectrometric Alpha Sources," in *Standardization of Radionuclides*, Proceedings of a Symposium on Standardization of Radionuclides held by the International Atomic Energy Agency, Vienna, October 10-14, 1966, pp. 473-85, International Atomic Energy Agency, Vienna, 1967, STI/PUB/139 (Conf. 661012).

5. E. K. Stepanov and N. V. Tyutikov, "Use of α-Radiation Sources for the Calibration and Determination of the Basic Parameters of the Semiconductor Type α Spectrometers," *Izmer. Tekh.* 5, 49-52 (May 1967) (In Russian).

6. E. K. Stepanov and N. V. Tyutikov, "Spectrometric Alpha Sources and Their Application in Determining the Basic Parameters of Spectrometers and Semiconductor Detectors," Vienna, International Atomic Energy Agency, 1966, Preprint No. SM-79/74 (In Russian). From IAEA Symposium on the Standardization of Radionuclides, Vienna (Conf. 661012-44).

7. H. Stocker, A. A. Rollefson, A. F. Hrejsa, and C. P. Browne, "Comparison of the Nuclear-Reaction Energy Scale with the Gamma-Ray Energy Scale," *Phys. Rev.* C4(3), 930-3 (1971).

8. L. Turkevich, E. J. Franzgrote, and J. H. Patterson, "Chemical Composition of the Lunar Surface in Mare Tranquillitatis," *Science* 165, 277-9 (July 18, 1969).

9. A. L. Turkevich, J. H. Patterson, and E. J. Franzgrote, "The Chemical Analysis of the Lunar Surface," *Amer. Sci.* 56(4), 312-43 (1968).

Miscellaneous Applications

Alpha sources in biological studies appear to have limited use. Belanger[1] has used alpha radiography with polonium and plutonium sources and x-ray

microradiography for observation of cancellous and compact bone from chick, rat, dog, and man. Alpha sources have also been used to irradiate cells. Simons[2] has used polonium in an apparatus giving an alpha-particle microbeam for the irradiation of living cells, and Mikhailova *et al.*[3] have irradiated in-vitro cultures of mammalian cells using $^{239}PuO_2$ sources fastened to stainless steel rods. Trujillo, Perrings, and Wellnitz[4] have prepared a linear alpha source for exposing tissue cells either in mass or in single layers. The polonium was electroplated on a thin wire which could be introduced into the cell culture.

In a study of the destruction of foam by alpha particles, Exerowa and Ivanov[5] used alpha sources of ^{235}U, ^{239}Pu, and ^{240}Pu. They found alpha sources much more effective in destroying foam than either beta or Po-Be neutron sources.

Van Itterbeek *et al.*[6] have developed an apparatus using a ^{210}Po alpha source for studying the effects of alpha radiation on superconductors. Samples were irradiated at very low temperatures (4.2°K) to determine the effects of lattice defects on superconducting properties.

Diethorn[7] has suggested the use of ^{210}Po, ^{238}Pu, and ^{244}Cm for low-thrust taks in space, and Choong and Mason[8] have studied a passive nuclear attitude-control system for solar probes that uses alpha sources. A passive nuclear spin-stabilizer would use at least two pairs of nuclear microthrusters that generate thrust from the radioisotopic emission of alpha particles. The capability of this system appears to be superior to that of other passive systems.

Luminescence induced in gases by ^{210}Po alpha sources has been studied by Harteck and Dondes.[9] They concluded that alpha sources appeared to be superior to beta or gamma sources because of their shorter range and greater specific ionization. Kunz[10,11] and these two investigators have made spectroscopic studies of alpha-ray-induced luminescence in gases. A patent[12] has been awarded to Parkins for a nuclear battery or power supply using a radioactive source, e.g., ^{238}Pu, deposited on the interior surface of a xenon-filled sphere containing photocells. The alpha particles cause luminescence in the gas within the sphere and the photocells convert the resultant light into electrical energy. A patent on a nuclear battery using semiconductors and an alpha source has been awarded to Rappaport.[13] The use of semiconductors and an alpha particle source has been studied by Voeller[14] as a nuclear time base for an electronic timer. The system was determined feasible but impractical. Based on a somewhat similar concept Koehler[15,16] has been awarded both a United States and a British patent on a time base combining a long-lived alpha source, ^{235}U, ^{238}U, ^{237}Np, or ^{239}Pu, and a solid state detector.

Although many examples of the applications and uses of alpha sources, as well as their preparation methods, have been cited in this review, it is by no means intended to be an exhaustive survey of the literature, but, instead, an aid to those interested in or working with alpha sources.

References

1. L. F. Belanger, *Alpha Radiography with Polonium and Plutonium Sources*, Annual Report, 1962-1963, TID-17894.

2. H.A.B. Simons, "An Apparatus Giving an α-Particle Microbeam for the Irradiation of Living Cells," *J. Sci. Instrum.* 32, 21-4 (1955).

3. A. A. Mikhailova, L. M. Mikhailov, A. S. Popov, and E. N. Sedamova, "α Irradiation of in-vitro Cultures of Mammalian Cells," *Radiobiologiya* 5, 627-8 (1965) (In Russian).

4. T. T. Trujillo, J. D. Perrings, and J. M. Wellnitz, "Preparation of a Linear Alpha Source," in *Biological and Medical Research Group (H-4) of the Health Division Semiannual Report (for) July through December 1959*, pp. 329-33, LAMS-2445.

5. D. Exerowa and D. Ivanov, "Destruction of Foam by Alpha-Particles," *Compt. Rend. Acad. Bulg. Sci.* 23(5), 547-50 (1970).

6. A. Van Itterbeek, Y. Bruynseraede, L. Van Poucke, and W. Thys, "An Experimental Apparatus to Determine the Effects of Alpha Irradiation at Liquid Helium Temperature," *Advan. Cryog. Eng.* 13, 92-4 (1967).

7. W. Diethorn, "Alpha Sources for Low-Thrust Tasks in Space," *Intern. J. Appl. Radiat. Isotop.* 15, 127-31 (1964).

8. P. T. Choong and E. A. Mason, "Passive Nuclear Attitude Control System for Solar Probes," *Trans. Amer. Nucl. Soc.* 13(2), 450 (1970). Presented at the American Nuclear Society Winter Meeting, Washington, D.C., Nov. 15-19, 1970.

9. P. Harteck and S. Dondes, *A Study of Improved Isotope Excited Light Source Techniques*, RPI-3816-4, Rensselaer Polytechnic Institute (January 1970).

10. S. Dondes, P. Harteck, and C. Kunz, "A Spectroscopic Study of Alpha-Ray-Induced Luminescence in Gases, Part I," *Radiat. Res.* 27(2), 174-210 (1966).

11. C. Kunz, S. Dondes, and P. Harteck, "A Spectroscopic Study of the Alpha-Ray-Induced Luminescence in Gases; the Helium-Carbon Monoxide System," *Radiat. Res.* 41(2), 288-98 (1970).

12. W. E. Parkins, "Nuclear Battery Including Photocell Means," U.S. Patent 3,483,040, Dec. 9, 1969 (filed June 27, 1966); assigned to North American Rockwell Corporation.

13. P. Rappaport and J. J. Loferski, "Radioactive Battery Employing Semiconductors," U.S. Patent 2,976,433, March 21, 1961 (filed May 25, 1954); assigned to Radio Corporation of America.

14. D. E. Voeller, *Nuclear Time Base Feasibility Study*, AD-622629, Harry Diamond Laboratories (August 12, 1965).

15. D. R. Koehler, "Time Base Combining Radioactive Source and Solid-State Detector," U.S. Patent 3,582,656, June 1, 1971 (filed Mar. 21, 1968); assigned to Bulova Watch Company, Inc.

16. D. R. Koehler, "Improvements in or Relating to Radioactive Time Bases Using Multicellular Detectors," British Patent 1,230,341, April 28, 1971 (filed Mar. 21, 1969); assigned to Bulova Watch Co., Inc.

AVAILABILITY OF ALPHA SOURCES

Alpha sources are available commercially. A recent buyers guide[1] lists approximately 65 suppliers of radioactive sources, and the Nuclear News 1971 Radioisotope Directory[2] lists isotope availability and gives the vendors for reference and high-intensity sealed sources of specific radioisotopes. The purchaser of a radioactive alpha source must, of course, obtain the necessary state and/or federal license. In this regard, the Division of Materials Licensing has published a helpful booklet[3] entitled "How to Get a License to Use Radioisotopes." Another publication,[4] which lists generally licensed quantities and exempt concentrations, shows the only alpha emitter available on a general license to be ^{210}Po and then only in quantities of 0.1 μCi or less.

Larger quantities of ^{210}Po and the other alpha source materials require a specific license. This latter document[4] also gives a listing of availability of radioactivity standards as of July 1969, and alpha-emitting standards of ^{210}Po, ^{228}Th, ^{233}U, ^{235}U, ^{237}Np, ^{239}Pu, and ^{241}Am are included.

References

1. "Buyers Guide Seventy-two," Supplement to *Nucl. News* 15(2), February 1972.

2. "1971 Radioisotope Directory," Supplement to *Nucl. News* 13(12), December 1970.

3. "How to Get a License to Use Radioisotopes," September 1969, Division of Materials Licensing, U.S. Atomic Energy Commission. For sale by the Superintendent of Documents, U.S. Government Printing Office, Washington, D.C. 20402 - Price 50 cents.

4. F. E. McKinney, S. A. Reynolds, and P. S. Baker, *Isotope User's Guide*, ORNL-IIC-19, Oak Ridge National Laboratory (September 1969).

ACKNOWLEDGMENT

The authors wish to gratefully acknowledge contributions and comments given by Mr. E. H. Kobisk and Mr. S. A. Reynolds.

ORNL-4819
UC-23 — Radioisotope and
Radiation Applications

INTERNAL DISTRIBUTION

1-3. Central Research Library
4. ORNL — Y-12 Technical Library
7-24. Laboratory Records Department
25. Laboratory Records, ORNL R.C.
26. P. S. Baker
27. E. E. Beauchamp
28. T. A. Butler
29-38. F. N. Case
39. F. L. Culler
40. J. H. Gillette
41. J. M. Googin (Y-12)
42-45. R. E. Greene
46. R. F. Hibbs
47. Lynda Kern
48. E. H. Kobisk
49. J. L. Liverman
50. L. O. Love
51. J. J. Pinajian
52. G. S. Petit
53-62. R. S. Pressly
63. M. E. Ramsey
64. S. A. Reynolds
65. R. A. Robinson
66. A. F. Rupp
67. R. W. Schaich
68. M. J. Skinner
69. A. H. Snell
70. D. B. Trauger
71. A. M. Weinberg
72. W. J. Wilcox, Jr. (K-25)

EXTERNAL DISTRIBUTION

73. N. F. Barr, Office of the General Manager, AEC, Washington, DC 20545
74. R. L. Butenhoff, Division of Applied Technology, AEC, Washington, D.C. 20545
75. J. C. Dempsey, Division of Applied Technology, AEC, Washington, D.C. 20545
76. E. E. Fowler, Division of Applied Technology, AEC, Washington, D.C. 20545
77. J. H. Jarrett, Battelle Memorial Institute, Pacific Northwest Laboratory, P.O. Box 999, Richland, Washington 99352
78. J. E. Machurek, Division of Applied Technology, AEC, Washington, D.C. 20545
79. J. N. Maddox, Division of Applied Technology, AEC, Washington, D.C. 20545
80. L. G. Stang, Jr., Associated Universities Inc., Brookhaven National Laboratory, Upton, Long Island, New York 11973
81. J. A. Swartout, Union Carbide Corporation, New York, N.Y. 10017
82. Research and Technical Support Division, AEC, ORO
83. Patent Office, AEC, ORO
84-266. Given distribution as shown in TID-4500 under Radioisotope and Radiation Applications category (25 copies — NTIS)