ORNL-TM-3522
Revision

CENTRAL RESEARCH LIBRARY

cy. 57

DESIGN STUDY – NEW ORNL PROCESS WASTE TREATMENT PLANT

F. E. Harrington

J. M. Holmes

[redacted]

OAK RIDGE NATIONAL LABORATORY
CENTRAL RESEARCH LIBRARY
DOCUMENT COLLECTION
LIBRARY LOAN COPY
DO NOT TRANSFER TO ANOTHER PERSON
If you wish someone else to see this document, send in name with document and the library will arrange a loan.
UCN-7969
(3 3-67)

OAK RIDGE NATIONAL LABORATORY
OPERATED BY UNION CARBIDE CORPORATION • FOR THE U.S. ATOMIC ENERGY COMMISSION

This report was prepared as an account of work sponsored by the United States Government. Neither the United States nor the United States Atomic Energy Commission, nor any of their employees, nor any of their contractors, subcontractors, or their employees, makes any warranty, express or implied, or assumes any legal liability or responsibility for the accuracy, completeness or usefulness of any information, apparatus, product or process disclosed, or represents that its use would not infringe privately owned rights.

ORNL-TM-3522
Revision

Contract No. W-7405-eng-26

CHEMICAL TECHNOLOGY DIVISION

DESIGN STUDY – NEW ORNL PROCESS WASTE TREATMENT PLANT

F. E. Harrington and J. M. Holmes

AUGUST 1972

NOTICE This document contains information of a preliminary nature and was prepared primarily for internal use at the Oak Ridge National Laboratory. It is subject to revision or correction and therefore does not represent a final report.

OAK RIDGE NATIONAL LABORATORY
Oak Ridge, Tennessee 37830
operated by
UNION CARBIDE CORPORATION
for the
U.S. ATOMIC ENERGY COMMISSION

CONTENTS

Page

Abstract 1

1. Summary and Recommendations 1

2. Introduction 5

2.1 Purpose of the Design Study 5

2.2 Justification for a Process Waste Treatment Plant 6

2.2.1 Historical Radioactive Discharge Record for ORNL . . 6

2.2.2 Sources of ^{90}Sr Discharges at ORNL 9

2.2.3 Effect of Rainfall on the ^{90}Sr Activity in White Oak Creek 11

2.2.4 Effect of a New Treatment Plant 16

3. Process Waste Treatment Plant 16

3.1 Design Flow Rates 19

3.2 Scavenging-Precipitation Ion-Exchange Process 20

3.2.1 Installation of an Alumina Column 23

3.2.2 Recycle of Ion Exchange Eluate 24

3.2.3 Evaporation of Ion Exchange Eluate 25

3.2.4 Modification of the Lime-Soda Plant for the Scavenging-Precipitation Ion-Exchange Process 25

3.3 Clarification Ion-Exchange Process 26

3.4 Capital Costs 29

3.5 Operating Costs 31

3.6 Comparison of the SP-IX and the C-IX Processes 34

3.6.1 Comparison of Costs 37

3.6.2 Comparison of Decontamination Factors 37

3.6.3 Overall Comparison of Processes 38

3.6.4 Addition of Anion Exchange to the SP-IX or C-IX Processes 39

3.6.5 Operation with Process Waste Containing High Levels of Phosphate 40

Page

3.7 Consideration of a Continuous Ion Exchange System 40

4. Long-Range Considerations 42

4.1 Diversion of White Oak Creek Plus a Treatment Plant at White Oak Dam. 42

4.2 Sealing of the Burial Grounds and Stream Dredging 45

4.3 Prevention of the Spread of Contamination from Under Building 3047 45

5. Appendix 49

6. References 54

DESIGN STUDY – NEW ORNL PROCESS WASTE TREATMENT PLANT

F. E. Harrington and J. M. Holmes

ABSTRACT

This investigation surveys the requirements for increased decontamination of ORNL process waste and the processes that are currently available to accomplish this decontamination. The contamination levels of ^{137}Cs and ^{90}Sr at White Oak Dam (in 1970) averaged about 5.9 curies per year. More than 50% of the ^{90}Sr activity at White Oak Dam came from the discharge of the Lime-Soda Plant into White Oak Creek. Other sources of ^{90}Sr contamination include the ORNL storm and sanitary sewers, and leaching from the burial grounds. Installation of a new process waste treatment plant in which a ^{90}Sr decontamination factor greater than 100 can be achieved, along with a reduction of ^{131}I contamination through longer decay periods, should decrease the activity levels at White Oak Dam by almost a factor of 2. Installation of a Scavenging Precipitation-Ion Exchange Process having a design feed rate of 200 gpm is recommended. The estimated capital cost is $893,000 (1971 dollars). If in the future further decreases in the discharge concentrations at White Oak Dam are desired, it may be necessary either to seal the burial grounds with an asphalt cover or to remove ^{90}Sr at White Oak Dam. The capital cost for either of these procedures will be at least $10 million.

1. SUMMARY AND RECOMMENDATIONS

This design study was concerned with determining the requirements for increased decontamination of ORNL process waste and evaluating the processes and techniques that could be applied. In order to properly define the magnitude of the problem, it was necessary to survey the existing data concerning the levels of radioactive contamination found in both branches of White Oak Creek and also at the point of discharge from the restricted area at White Oak Dam. Estimates of the impact of a new process waste treatment plant on the levels of contamination at White

Oak Dam were made based upon the results of this survey. Alternative types of treatment plants were considered in detail in order to establish the best possible process for installation at ORNL. The information developed during the survey and the recommendations resulting from the design study are summarized below.

1. The radioactivity discharged by Oak Ridge National Laboratory into White Oak Creek between 1944 and 1970 has decreased to a fairly constant level during the last three years. At present, the radioactive content of the discharge into the Clinch River averages approximately 0.3% of the radiation concentration guides (RCG) given in the AEC Manual, Chapter 0524. The principal isotopic offenders include ^{90}Sr, ^{3}H, and ^{131}I. More than 50% of the ^{90}Sr activity originates from the discharge of the process waste system (Lime-Soda Plant) into White Oak Creek. Other sources include the storm and sanitary sewers, leaks into the Fifth Street Branch of White Oak Creek, and activity leached from burial grounds in the White Oak Creek Drainage Basin. A correlation of the strontium levels in both the Melton and Bethel Valley Branches of White Oak Creek with the average monthly flow rates (assumed to be proportional to rainfall) confirms that strontium is being leached from contaminated areas in both Melton Valley and Bethel Valley.

2. Installation of a new process waste treatment plant which has a ^{90}Sr decontamination factor (DF) greater than 100, along with the reduction of ^{131}I contamination through longer decay periods, should decrease the average activity levels at White Oak Dam by about a factor of two. In addition, diversion of the leaks currently flowing into the Fifth Street Branch and various sewers to a new process waste treatment plant should further decrease the levels at the Dam. Based on these estimates, the following recommendations are made concerning a new process waste treatment plant:

(a) Replace the Lime-Soda Process with a new process waste treatment plant having a design base rate of 200 gpm. This 200-gpm design basis includes a 33% safety factor to allow for future sources of process waste, drainage from contaminated areas in ORNL, and provision for emergency processing of wastes normally released to White Oak Creek after retention and monitoring.

(b) The Scavenging Precipitation – Ion Exchange (SP-IX) process is recommended for the new process waste treatment plant as long as pit disposal of the sludge is acceptable at ORNL. However, if hydrofracturing is substituted for pit disposal over the long term, consideration should be given to operating the Clarification-Ion Exchange Process (C-IX) since it generates no sludge (the sludge is dissolved in the eluate). However, the C-IX process produces larger volumes of eluate from the ion exchange columns. Design of the major equipment items such that either flowsheet can be used in the plant is strongly recommended. Changes that would be required include the installation of a different ion exchange resin and additional equipment for a different type of chemical feed to the head end of the process.

(c) The addition of anion exchange or an alumina column (for phosphate removal) to the SP-IX process is not recommended because of the large volumes of spent caustic regenerant that would be produced and sent to the intermediate waste system. These items would also increase the capital cost significantly. An alumina column is not necessary because the problem of intermittent high phosphate concentrations in the process waste can be handled by accepting a shorter ion exchange system run cycle (regeneration daily instead of every 2.3 days) and an equivalent increase in the consumption of regenerant chemicals.

(d) Recycle of neutralized ion exchange column regenerant in the SP-IX process is not recommended because it would

increase the nitrate concentration in White Oak Creek (from 4 ppm to 9 ppm), which could have a deleterious impact on White Oak Lake.

3. The capital cost for installation of the SP-IX process at ORNL has been estimated to be about $893,000 (1971 dollars). Installation of a modified C-IX process that would utilize the present Lime-Soda Plant equipment would cost about $733,000 (1971 dollars). However, this process has not been demonstrated on a pilot-plant scale; consequently, its installation would entail more risk than the SP-IX process, which has been demonstrated in a pilot plant.

4. If in the future it becomes desirable to reduce the discharge of activity at White Oak Dam by as much as a factor of 10, it will be necessary to reduce the discharge of ^{106}Ru and ^{131}I by adding an anion exchange column to the new process waste treatment plant. However, since significant quantities of ^{90}Sr escape from the burial grounds, it would also be necessary to either (1) prevent ^{90}Sr leaching at the source or (2) remove ^{90}Sr at White Oak Dam. A rough estimate of the capital cost for either procedure amounts to at least $10 million.

   Prevention of leaching of ^{90}Sr at the source might be accomplished by sealing the burial grounds with an asphalt cover and dredging the stream and lake beds. An extensive drainage system to prevent groundwater from seeping into the burial grounds would probably be required.

   Removal of ^{90}Sr from the water flowing over White Oak Dam would involve diversion of the uncontaminated water in both branches of White Oak Creek around the contaminated area by a system of canals or culverts. Decontamination of the residual water at the dam could be accomplished by use of a large continuous ion exchange system, but waste disposal from this plant would become a major consideration in this case.

5. The source of a major portion of the ^{90}Sr appearing at the process waste treatment plant has been traced to seepage underneath Building 3047. Elimination of this source could reduce the load on the Lime-Soda Plant and might possibly further reduce the ^{90}Sr levels in White Oak Creek if a portion of this source is bypassing the waste treatment plant.

2. INTRODUCTION

Process waste from Oak Ridge National Laboratory is essentially a mixture of raw and treated water contaminated with small quantities of radionuclides. In this study, process waste was assumed to include all of the liquid waste discharged at White Oak Dam into the Clinch River. This waste consists of:

(1) Discharge from the process waste system at ORNL.

(2) Discharge from storm drains.

(3) Discharge from sanitary drains.

(4) Water from Bethel and Melton Valley drainage basins.

The flow of process waste at White Oak Dam varies between 100 and 500 million gal per month, depending on the amount of rainfall in the drainage area. Average flow rates are about 12.5 ft^3/sec; however, during flash storms, the flow has increased to above 300 ft^3/sec.

This study examines the sources of contamination in the process waste and proposes procedures for reducing the discharges at White Oak Dam. It also considers longer-range possibilities for further reducing the levels of contamination. Estimated costs for both the short- and long-term goals are also included in the study.

2.1 Purpose of the Design Study

The information included in this study report was developed in order to properly define the magnitude of the problem and to provide possible solutions for achieving a short-term solution to the problem. Several

alternative solutions are included in order to present management with a wider latitude for decision-making. In addition, possible long-term solutions are also suggested for consideration as potential courses of action in the future.

2.2 Justification for a Process Waste Treatment Plant

Aqueous wastes, discharged as process waste from various facilities within the controlled area of Oak Ridge National Laboratory, contain low levels of radioactivity. In addition to these sources, which are controllable to a certain extent, there are other sources (e.g., storm drains, sanitary sewers, and leaks) that may be corrected through extensive future changes in piping systems. However, one source, the activity leached by groundwater from the burial grounds, will probably be very difficult to control. The wastes from all of these sources flow into White Oak Creek and are eventually discharged to the Clinch River over White Oak Dam, which is the official discharge station for ORNL. Figure 1 shows a plan of a portion of the process waste system.

2.2.1 Historical Radioactive Discharge Record for ORNL

Table 1 summarizes the annual discharges of all important radionuclides, specified in terms of curies, by ORNL to the Clinch River. The record covers the period 1944-1970 and demonstrates that, for the past three years, the quantity discharged has remained essentially constant. The principal offenders include ^{90}Sr, ^{3}H, and ^{131}I. The levels of activity in the Clinch River, expressed as a percentage of the permissible radiation concentrations permitted by Federal Regulations (AEC Manual 0524), average approximately 0.3%. The isotope of prime interest in this study was ^{90}Sr since it is not possible at present to reduce the levels of ^{3}H (the prime source of ^{3}H is located in Burial Ground No. 5, where it is leached to the groundwater) except by decay, and the ^{131}I levels may be decreased by increasing the holdup times prior to release to the waste system.

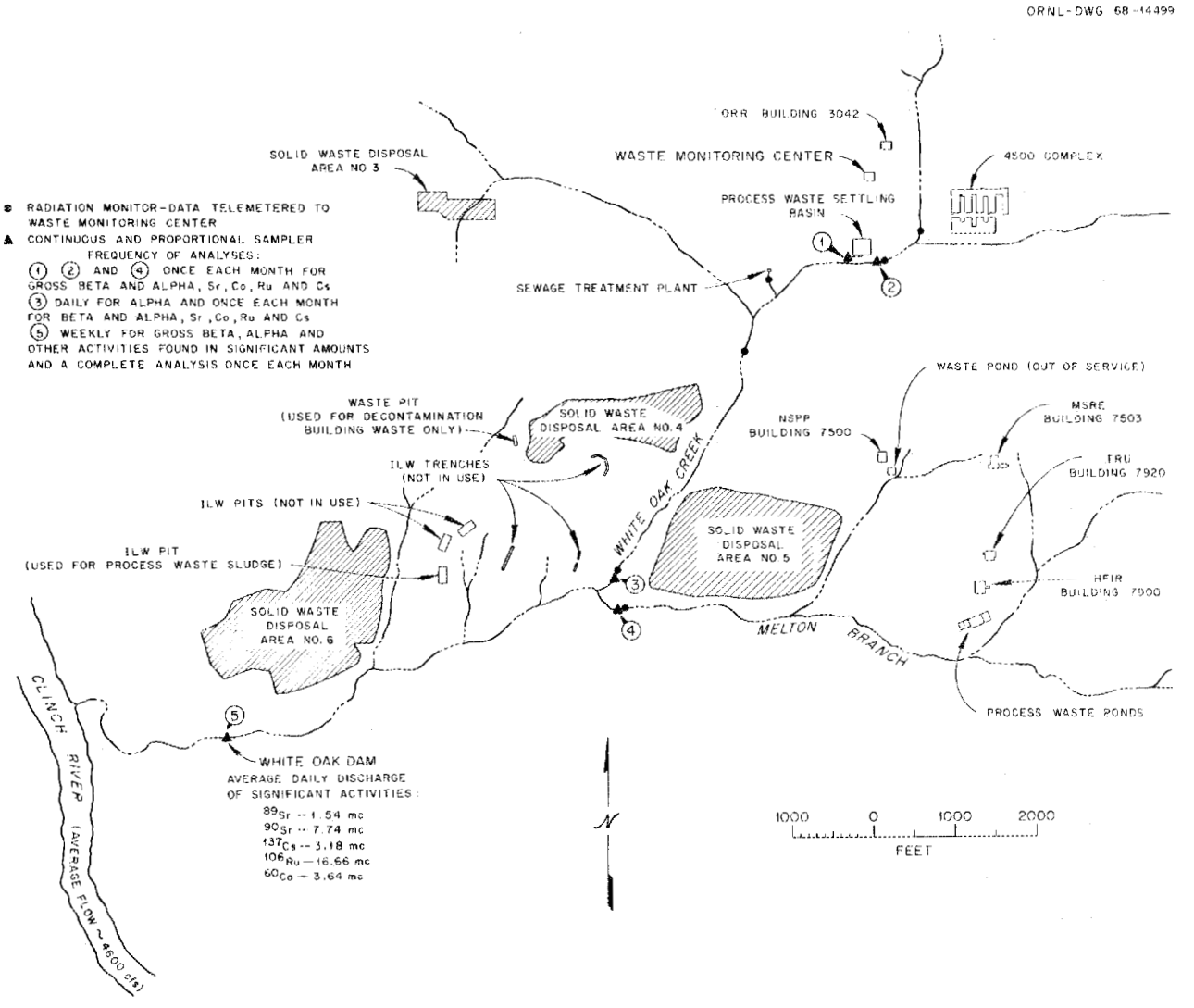

Fig. 1. Location Plan for White Oak Creek Sampling Stations and Radiation Monitors, Intermediate-Level Waste Pits and Trenches, and Solid-Waste Disposal Areas.

Table 1. Annual Discharges of Radionuclides from ORNL to Clinch River[a]

Year	Gross Beta	^{137}Cs	^{106}Ru	^{90}Sr	Total Rare Earths[b]	^{144}Ce	^{95}Zr	^{95}Nb	^{131}I	^{60}Co	^{3}H
1944	600[c]										
1945	500										
1946	900										
1947	200										
1948	494										
1949	718	77[c]	110[c]	150[c]	77[c]	18[c]	180[c]	22[c]	77[c]		
1950	191	19	23	38	30		15	42	19		
1951	101	20	18	29	11		4.5	2.2	18		
1952	214	9.9	15	72	26	23	19	18	20		
1953	304	6.4	26	130	110	6.7	7.6	3.6	2.1		
1954	384	22	11	140	160	24	14	9.2	3.5		
1955	437	63	31	93	150	85	5.2	5.7	7.0	6.6	
1956	582	170	29	100	140	59	12	15	3.5	46	
1957	397	89	60	83	110	13	23	7.1	1.2	4.8	
1958	544	55	42	150	240	30	6	6	8.2	8.7	
1959	937	76	520	60	94	48	27	30	0.5	77	
1960	2190	31	1900	28	48	27	38	45	5.3	72	
1961	2230	15	2000	22	24	4.2	20	70	3.7	31	
1962	1440	5.6	1400	9.4	11	1.2	2.2	7.7	0.36	14	
1963	470[c]	3.5	430	7.8	9.4	1.5	0.34	0.71	0.44	14[c]	
1964	234[d]	6.0	191	6.6	13	0.3	0.16	0.07	0.29	15[d]	
1965	95	2.1	69	3.4	5.9	0.1	0.33	0.33	0.20	12[d]	
1966	48	1.6	29	3.0	4.9	0.1	0.67	0.67	0.24	7[d]	3,093[e]
1967	40[d]	2.7	17	5.1	8.5	0.2	0.49	0.49	0.91	3[d]	13,273[e]
1968	16[e]	1.1	5	2.8	4.4	0.03	0.27	0.27	0.31	1[e]	9,685[e]
1969	13[e]	1.4	1.7	3.1	4.6	0.02	0.18	0.18	0.54	1[e]	12,247[e]
1970	14[f]	2	1.2	3.9	4.7	0.06	0.02	0.02	0.32	1	9,473

[a]Discharges given in terms of curies. Data obtained from Applied Health Physics Section.

[b]Minus cerium.

[c]Data taken from ORNL-4035; gross beta other than tritium, ORNL-3721.

[d]Data taken from ORNL-4286. [e]Data taken from ORNL-4563. [f]Results reported by H. H. Abee.

2.2.2 Sources of ^{90}Sr Discharges at ORNL

Table 2 presents an estimate (minor modifications of the estimate by E. J. Witkowski[1]) of the total quantity of ^{90}Sr discharged (in curies) annually. The total reported is the sum of the listed sources using the high value for the ranges noted. The activity in the storm sewer (west of the treatment plant) is believed to have its primary origin in the inleakage from the equalization basin to an abandoned section of clay pipe. This storm sewer also carries waste from Buildings 2000, 2001, and 3017. The activity in the sanitary sewer is believed to originate primarily from inleakage under Central Avenue, where earth was contaminated by a leaking intermediate-level-waste line (removed from service years ago). The leak into the Fifth Street Branch is believed to be mainly the result of seepage near waste tank WC-2 into the storm sewer running north to south between the Radioisotope and 3039 Stack areas. This sewer joins the Central Avenue sewer that runs east to the Fifth Street Branch.

Table 2. Estimated Sources of ^{90}Sr Discharges into White Oak Creek

	Ci/year	Percentage of Total
Process waste system	2.00	51.3
Storm sewer (west of treatment plant)	0.001-0.02	0.5
Sanitary sewer	0.36-0.72	18.5
Leak into Fifth Street Branch	0.10-0.34	8.7
Burial Ground 4	0.15	3.8
Melton Branch	0.67	17.2
Total (using high value for ranges)	3.90	100.0

Table 3 presents data collected during February 1971 for the sources of ^{90}Sr in the (Bethel Valley) Process Waste Collection System. The flows are given in millions of gallons, and the ^{90}Sr activity in disintegrations per minute per milliliter. These data indicate that about 0.8 Ci of ^{90}Sr

was fed to the Lime-Soda Plant, with more than 70% of this quantity (> 80% of measured total) having its origin in MH-114. The contribution measured at MH-114 ranged from 55 to 85% of the known sources for January-March 1971. It appears that the bulk of this ^{90}Sr enters via seepage below MH-112 from contaminated ground beneath Building 3047.

Table 3. Flows and ^{90}Sr Concentration in Process Waste Collection System Tabulated During February 1971

Building	Sample Point (MH)	Volume (millions of gallons)	Quantity of ^{90}Sr	
			dis min^{-1} ml^{-1}	10^3 μCi
3019	25	0.05	45	3.83
Reactors (+ 3047)	114	1.88	176	564
3025, 3026	149	1.12[a]	0.6	1.14
3517	209	0.16	147	40
3508, 3503[b]	229	0.66	17.9	20.1
Isotope area	234	0.33	110	61.9
3525, 3526, 3550, MH-235	235	0.47[a]	0.029	0.02
2026	240	0.25	< 0.01	0.004
2531	243	0.74	6.1	76.9
Subtotal		5.66		768
Diversion box[c]		5.73		
Treatment feed[d]		7.5	63	805

[a]A portion of these flows has since been removed to the storm sewer.

[b]Not all buildings or entries are listed. For this sample, the primary source of activity is believed to be from the Hot Storage Garden and sumps near Intermediate Level Waste Tanks WC-5, -6, -7, -8, -9, and Th-1, -2.

[c]Sampled daily for operational flow. Indicated flow should equal subtotal plus Building 3504 plus inleakage.

[d]Pumping rate to Lime-Soda Plant. It is of interest to note that this flow for March and April amounted to 5.7 and 3.7 million gallons, respectively.

The wastes collected by the process waste system are surged in the equalization basin (a large earthen pit) before treatment, and the treatment effluent is, in turn, surged in the settling basin (also a large earthen pit). The Lime-Soda Plant removes approximately 80% of the ^{90}Sr in the feed. This plant is a typical horizontal-flow water softener in which the flash-mixer, coagulator, and clarifier are incorporated in a concrete rectangular pit. The $CaCO_3$ precipitation removes ^{90}Sr and rare earths, and grundite clay removes ^{137}Cs. A considerable quantity of solids has accumulated in the settling basin. Dorr-Oliver[2] reported the ^{90}Sr content of these solids to be $\geq 10^5$ dis $min^{-1}g^{-1}$ and that $\geq$ 15% of the ^{90}Sr content in the effluent was associated with solids. Thus, it is apparent that a 0.01% increase in entrained solids in the effluent would increase the amount of ^{90}Sr released by a factor of 2. The solids discharged by the settler are currently disposed of in a waste pit. Over the long term, this method will likely be replaced by hydrofracture or salt-mine disposal. Over the short term, addition of less clay (since ^{137}Cs is not a major contributor) could reduce the solids generation rate.

2.2.3 Effect of Rainfall on the ^{90}Sr Activity in White Oak Creek

The data presented in Table 2 indicate that significant levels of strontium activity are found in the Melton Branch of White Oak Creek. The main source of this contamination is probably Burial Ground No. 5 and the old 7500 area waste pond, although the latter has recently been covered with a layer of asphalt. It is known that almost all of the tritium released to White Oak Creek originates in Burial Ground No. 5; thus it is quite possible that strontium, along with tritium, could be leached from the same area.

A correlation of the monthly strontium levels in the Melton Branch of White Oak Creek between January 1969 and March 1971 with the average monthly flow rates in the creek (assumed to be proportional to rainfall in the Melton Valley watershed) confirms the assumption that strontium is being leached from contaminated areas in Melton Valley. Figure 2 shows that a definite correlation exists between the strontium levels and

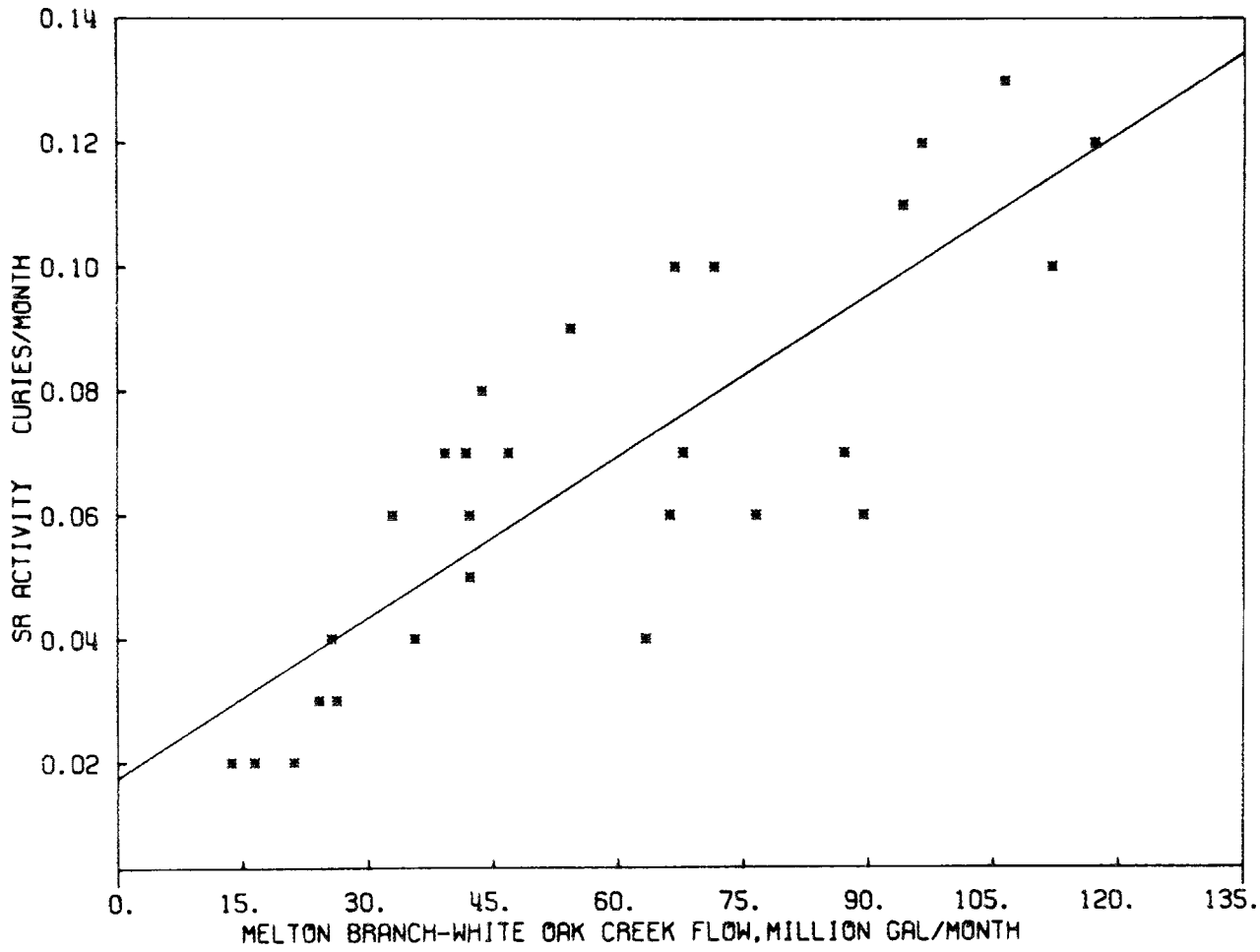

Fig. 2. Strontium Activity in Melton Branch of White Oak Creek.

the Melton Valley Creek flow, and the resulting correlation coefficient of 0.826 confirms this relationship. At the average Melton Valley Branch flow rate of 57.9 million gallons per month, the regression predicts a strontium activity level of 0.068 Ci/month or 0.81 Ci/year. This is somewhat higher than the value of 0.67 Ci/year given in Table 2, which was based on more recent data.

A similar analysis was performed on the strontium activity in the Bethel Branch of White Oak Creek. The results of this analysis are shown in Fig. 3. Again, the results indicate that there is a significant relationship (correlation coefficient = 0.821) between the strontium levels and the flow in the Bethel Branch of White Oak Creek. The assumption that the flow in the Bethel Branch is representative of the rainfall in the Bethel Valley drainage area might be challenged on the basis that ORNL discharges process waste to the Creek. However, since the volume of this process waste is only a small fraction of the Bethel Branch flow, the assumption is probably warranted. The postulated strontium leaching effect of the rainfall in Bethel Valley might also be due, in part, to increased discharges of strontium from the Lime-Soda Plant during periods of high rainfall. However, an attempt at correlating the data for this source of strontium with the Bethel Branch flow rates failed to demonstrate a significant relationship (see Fig. 4). Therefore, the efficiency of the Lime-Soda Plant and its strontium discharge rate are apparently independent of rainfall in the area. Figure 4 indicates that the average level of strontium discharged by the plant is about 0.15 Ci/month or 1.8 Ci/year. This agrees with the value of 2.0 Ci/year given in Table 2.

The results of the above relationships indicate that major sources of strontium contamination exist in both Bethel and Melton Valleys and that the amount of activity released by these sources is strongly dependent on rainfall in the area. Possible locations of these sources include the contaminated ground under Building 3047, the ORNL Settling Basin, the contaminated ground in the vicinity of Building 3525, Burial Grounds Nos. 4 and 5, and the 7500 Area Waste Pond.

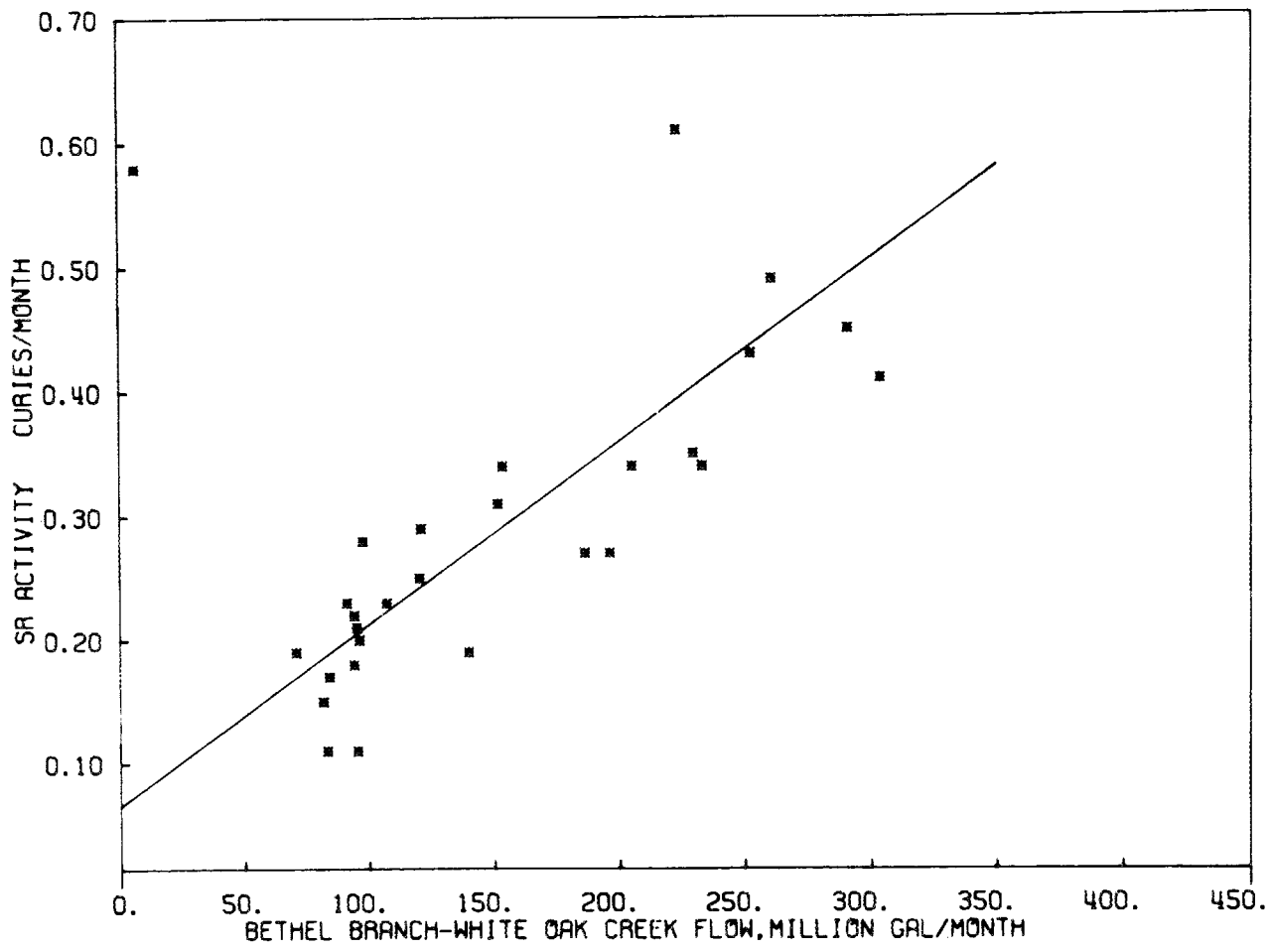

Fig. 3. Strontium Activity in Bethel Branch of White Oak Creek.

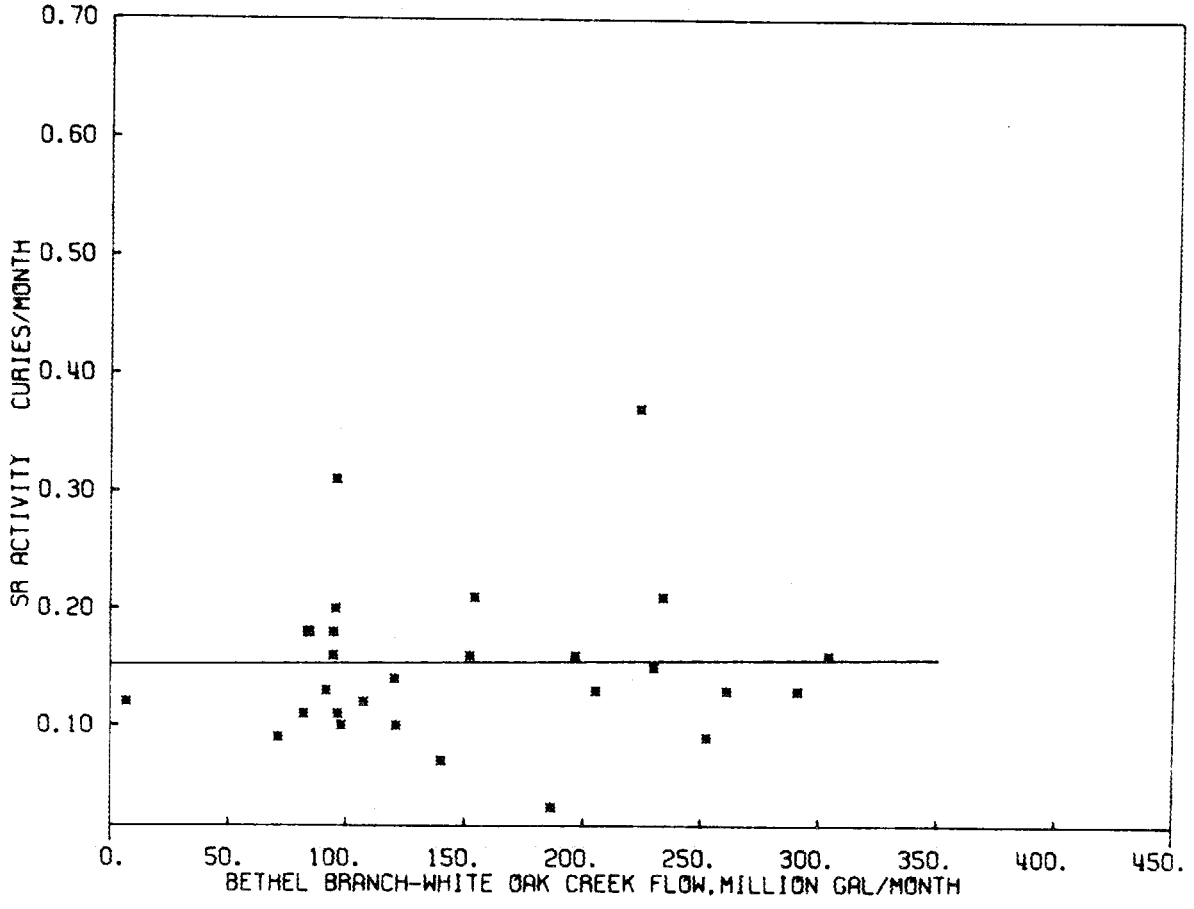

Fig. 4. Strontium Activity from the Process Treatment Plant.

A correlation of the total ^{90}Sr activity with the total flow in White Oak Creek is presented in Fig. 5. The total strontium activity at any flow rate may be estimated from the following linear regression equation:

$$S = 0.083 + 0.001293F,$$

where

S = strontium activity, Ci/month,

F = total White Oak Creek flow, millions of gallons per month.

Since strontium activities can be estimated as a function of flow rate, the percentage of RCG can be determined at any level of White Oak Creek flow.

2.2.4 Effect of a New Treatment Plant

The total quantity of ^{90}Sr discharged during 1970 at White Oak Dam was about 3.90 Ci (see Table 2). The effects of installing a new process waste treatment plant and eliminating the leakages mentioned in Table 3 on these discharges are presented in Table 4. A new treatment plant alone will reduce the curies of ^{90}Sr discharged from the treatment plant to 0.05 curie/year. The last column in Table 4 indicates that the total ^{90}Sr activity discharged can be reduced to about 0.90 curie/year by diverting the leakage into the sewers and Fifth Street Branch to a new process waste treatment plant where the ^{90}Sr would be removed. If only the leaks are corrected and the present plant is retained, the discharge would be about 3.1 curies/year, as indicated by column 4 in Table 4. These data demonstrate that a new treatment plant will provide a substantial reduction in ^{90}Sr discharges and that an additional reduction could be achieved by correcting leaks in the X-10 area.

3. PROCESS WASTE TREATMENT PLANT

Replacement or modification of the Lime-Soda Plant has been studied extensively in order to improve the decontamination of process waste. The Plant is currently removing about 80% of the strontium activity, which is

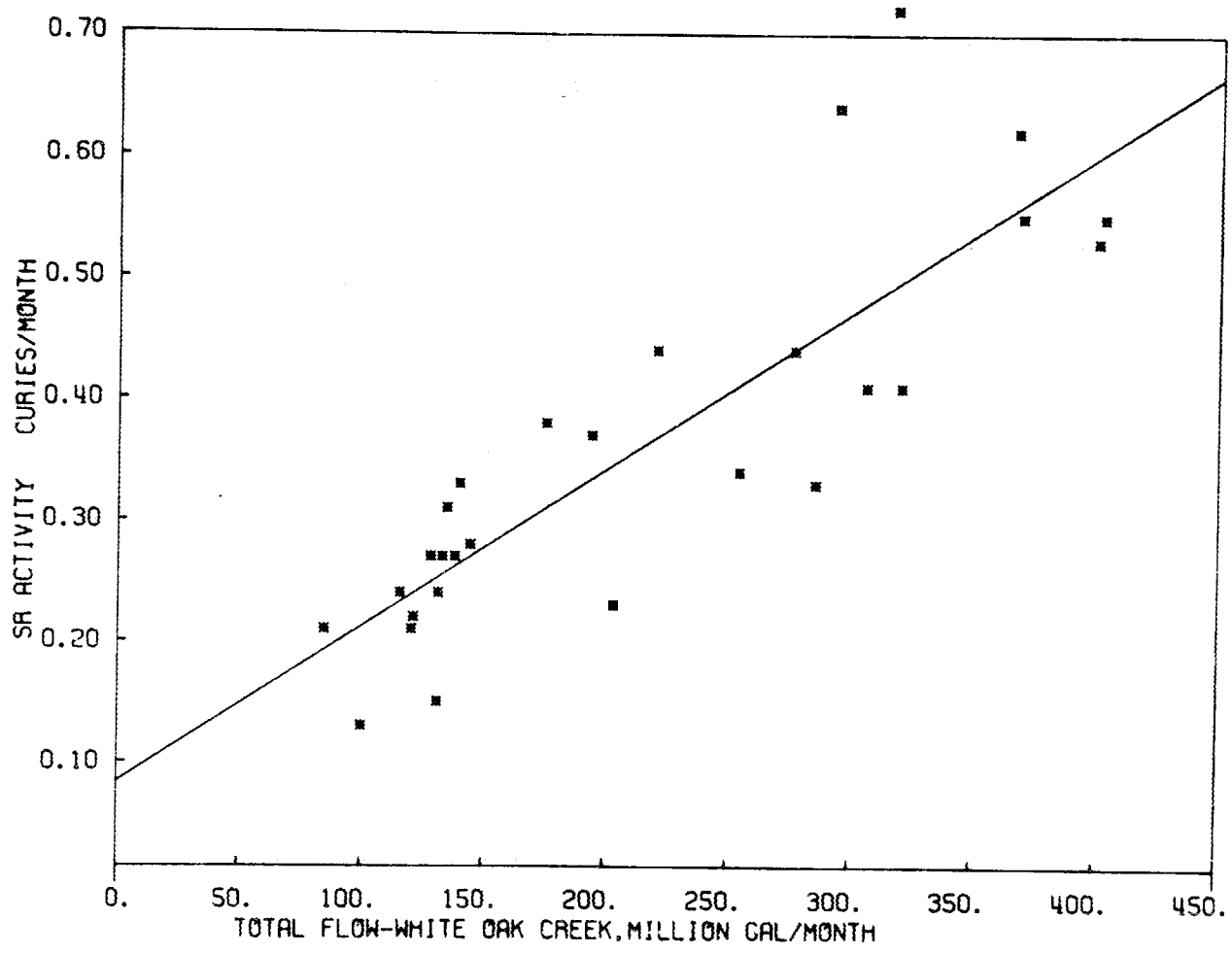

Fig. 5. Total Strontium Activity in White Oak Creek.

Table 4. Effects of Changes on ORNL Discharges at White Oak Dam

Source	Quantity of ^{90}Sr Discharged Annually (Ci)			
	Average at Present[a]	(I) After Installation of a New Process Waste Treatment Plant[b]	(II) After Diversion of Leaks from Sewers and Fifth St. Branch to Treatment Plant[c]	After Incorporating Changes (I) and (II)
Process waste treatment plant discharge	2.00	0.05	2.22	0.06
Storm sewer (west of treatment plant	0.02	0.02	0.02	0.02
Sanitary sewer	0.72	0.72	-	-
Leak into Fifth Street Branch	0.34	0.34	-	-
Burial Ground No. 4	0.15	0.15	0.15	0.15
Melton Branch	0.67	0.67	0.67	0.67
Total	3.90	1.95	3.06	0.90

[a]Maximum value of ranges in Table 2.

[b]Assumes a ^{90}Sr DF of 200 for new process waste treatment plant. Current DF is about 5.0.

[c]New Process Waste Treatment Plant not installed.

not sufficient to prevent the occurrence of significant levels of radioactivity in White Oak Creek (see Sect. 2). Installation of a new facility that could reduce the strontium and cesium contamination by factors of 1000 and 100, respectively, would significantly reduce the discharge of activity to White Oak Creek and the Clinch River.

Two processes developed at ORNL have been considered for replacing the present treatment method. Both of these processes use ion exchange for the removal of radioactive nuclides and include precipitation steps (which are referred to as head-end steps). The first process that was developed is known as the Scavenging-Precipitation Ion-Exchange Process; it has been demonstrated on a pilot-plant scale using ORNL process waste.[3,4] The second process, known as the Clarification Ion-Exchange Process, is an adaptation of the work by Yee[5] on the Water Recycle Process. It could also utilize a continuous ion exchange system, as demonstrated by Higgins.[6]

3.1 Design Flow Rates

The data presented in Table 3 indicate that the monthly flow to the Lime-Soda Plant in February 1971 was about 7.5 million gal, or an average daily flow rate of 270,000 gal. However, recent reductions in the flows from two sources (see footnote a, Table 3) decreased the average flow for the period of April 1 through August 30, 1971, to approximately 117,000 gal/day. Currently, the normal operating feed rate is about 100 gpm during weekdays. (The plant is shut down on weekends.) A new treatment plant designed for this range of flows would require that the design basis be set at 100 to 150 gpm. However, some allowance should be made for the following present or future sources of water that may have to be decontaminated in a new process waste treatment plant:

(1) Process waste from future sources such as new radiochemical processing facilities proposed for Melton Valley.

(2) Residual drainage from areas where contaminated water is currently leaking into storm and sanitary sewers. After the sections of underground pipe that are allowing contamination to enter the sewers have been isolated, it may be necessary

to pump the residual inleakage to the process waste system in order to prevent bypassing to White Oak Creek.

(3) Provision for emergency processing of wastes normally released directly to White Oak Creek after retention and monitoring. The processing of these wastes can be spread out over a reasonable period of time through the use of retention ponds or the equalization basin.

The daily volume that might be generated by these sources has been estimated at 70,000 gal/day. This would add about 50 gpm to the plant capacity and require a design base rate of 200 gpm. The actual operating rate for the plant, however, would be in the 100- to 150-gpm range. It should be noted that normal chemical consumption and sludge production rates will be determined by the actual operating rate and not by the 200-gpm design base rate.

3.2 Scavenging-Precipitation Ion-Exchange Process

The chemical flowsheet for the Scavenging-Precipitation Ion-Exchange Process (SP-IX) is given in Fig. 6. In the head-end step, the pH of the waste is raised to about 11.8 by making the waste 0.01 N in NaOH and, at the same time, adding 5 ppm of Fe^{2+} as copperas, which promotes the formulation of a large floc from the dissolved calcium and magnesium present in the waste stream. Most of the calcium and magnesium precipitate as the carbonate and hydroxide, respectively. Dirt, algae, and radionuclides are also carried down during this precipitation step, which takes place in the flash-mixer, flocculator, and clarifier.

Coagulation of the precipitates into larger particles occurs in the flocculator, where the mixture is gently agitated at 1 rpm during a 15-min residence time. The floc leaves the bottom of the flocculator and enters the bottom of the clarifier vessel, where separation of solids is achieved by feeding the mixture through a sludge-blanket. The 4- to 5-ft-high sludge blanket consists of fluidized particles of precipitate that trap the floc and furnish additional nuclei to aid in the precipitation of additional solids by crystal growth. As particles in the sludge blanket agglomerate, they settle in the water until they form a slurry in the

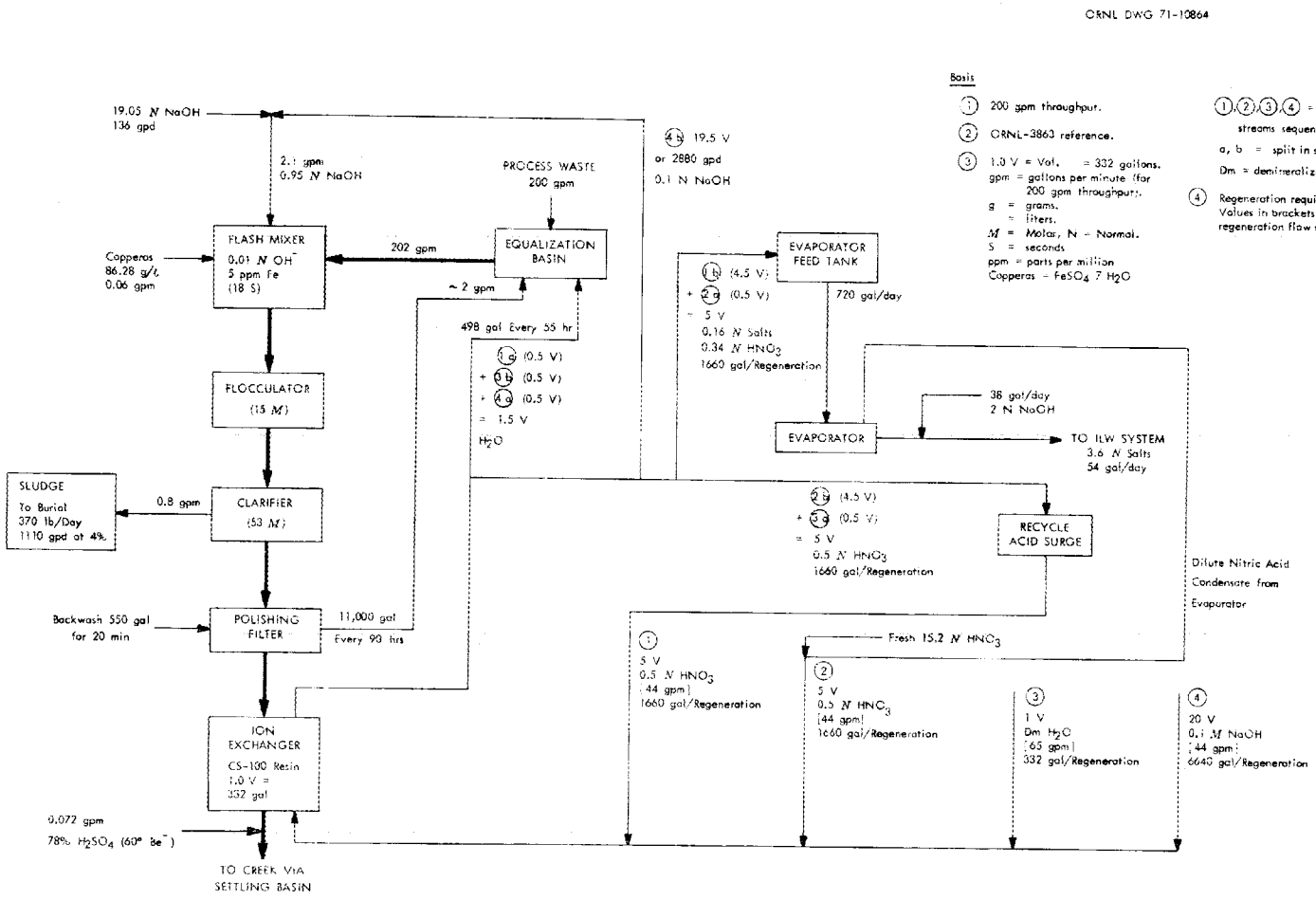

Fig. 6. Scavenging-Precipitation Ion-Exchange Process.

bottom of the vessel. Some of this slurry is recycled to the flash-mixer to provide "seed" nuclei to promote precipitation. The remainder may be concentrated by centrifugation to a 30% slurry, which is suitable for disposal via burial or hydrofracture. However, if pit disposal is used, the slurry will be discharged at a concentration of about 4% by weight and transported by tank truck. The effluent from the clarifier is further clarified by a polishing filter containing a fixed bed of anthracite.

After filtration, the clarified effluent having less than 10 ppm of hardness is fed to a cation exchange column containing sodium-form Duolite CS-100 resin. This is a phenolic-carboxylic cation exchange resin (a weak-acid type resin), which was selected because of its high preference for sorbing cesium over sodium present in the liquid phase. Breakthrough of cesium does not occur until 2000 bed volumes of waste have been fed to the column. To regenerate the resin, the column is removed from service; then the bed is washed with one-half bed volume of water and is subsequently upflow eluted with five volumes of 0.5 N HNO_3 remaining from a prior regeneration.* This volume of acid effectively removes almost all the sorbed hardness and radioactivity. Another five volumes

*Recent experience at a commercial reprocessing facility[7] where Duolite CS-100 is used for low-level waste treatment has indicated some degradation of the resin during regeneration with nitric acid. It is believed that part of the degradation was due to inadvertent regeneration with nitric acid more concentrated than 0.5 N. However, at other times the reason for degradation was not readily apparent. Based upon this experience, it is recommended that a series of laboratory tests be performed on currently available Duolite CS-100 resin to determine the extent of resin degradation during nitric acid regeneration. The degree of degradation could be determined by the capacity of the resin for the ^{137}Cs dissolved in the low-level waste feed.

of 0.5 N HNO_3 are then fed to complete the elution; however, this acid effluent is fed to a storage tank for use during the first half of the elution cycle on the next regeneration. The bed is then rinsed with one bed volume of water and converted to the sodium form by feeding 20 volumes of 0.1 N NaOH in an upflow mode through the resin. The rinse water is returned to the equalization basin, while the 0.1 N NaOH is sent to storage to be used for adjusting the pH of the feed to the head-end step.

Variations to the flowsheet that have been demonstrated include: (1) the addition of an alumina column to remove phosphates from the plant feed in case the phosphate content becomes excessive (a phosphate content > 1 ppm prevents precipitation of the calcium in the head end), (2) provision for the recycle of the ion exchange eluate to the head end, which, in turn, requires the addition of Grundite clay to the flash-mixer to increase the effectiveness of cesium removal, and (3) the addition of an evaporator to reduce the volume of eluate sent to the intermediate-level waste system. The evaporator might also be used to denitrate the eluate for the purpose of recovering nitric acid for recycle - but this step has not been demonstrated. These variations are discussed in the subsections that follow.

3.2.1 Installation of an Alumina Column

Installation of an alumina column for phosphate removal has not been included in the proposed process as an alternative because the equipment required for this step would be large and relatively expensive, and would be used only a small fraction of the time. The estimated cost for a 9-ft-diam alumina column plus associated caustic and nitric acid tanks for regeneration is about $135,000. It is believed that a less expensive and more practical way of providing for high phosphate levels in the feed would involve accepting a shorter run cycle during periods of high phosphate concentrations in the plant feed. For example, Brooksbank[3] found that 5 ppm of Turco 4324 (a detergent) in the feed reduced the number of cation resin bed volumes required to achieve breakthrough from 2000 to 882. Since a cation bed is designed to operate for 2.3 days (based on 2000 bed

volumes), reduction of the breakthrough point to 900 bed volumes would decrease the run time to about one day; therefore, the beds would have to be regenerated daily during periods of high phosphate levels in the plant feed. This schedule would probably be acceptable for intermittent periods of operation when phosphate levels are high. Regenerant costs would increase during these periods, but would be lower than the costs for operating an alumina column.

3.2.2 Recycle of Ion Exchange Eluate

Recycle of neutralized regenerant from the ion exchange process was successfully demonstrated during two Low-Level Pilot Plant runs.[4] It was necessary to add Grundite clay to the process head end in order to improve the retention of cesium in the sludge withdrawn from the clarifier. (Grundite is a clay containing 65 to 75% illite, 10 to 20% kaolinite, and 5 to 15% quartz.) About 0.7 lb of clay was added as a slurry per thousand gallons of waste. This procedure eliminates the need for disposal of the ion exchange column regenerant but increases the volume of sludge and adds nitrate to the low-level waste. The nitrate concentration of the waste leaving the plant would be about 77 ppm; however, it would be diluted by White Oak Creek to an average concentration of about 4 ppm and a maximum of 9 ppm during periods of low flow. Incorporation of this feature in the proposed process was rejected because of the resulting increase in nitrate concentration in White Oak Creek. Although 45 ppm of nitrate is permissible in drinking water according to current U.S. Public Health Drinking Water Standards, the estimated 4 to 8 ppm of nitrate could have deleterious effects, such as eutrophication, on White Oak Lake and alter its usefulness as an ecological research facility. For example, it has been suggested that the critical levels of inorganic phosphorous and nitrogen are 0.015 ppm and 0.3 ppm, respectively; above these, algal blooms can be expected.[8] The nitrate content of the lake would probably be a factor of 10 above this critical level if the proposed process were used.

3.2.3 Evaporation of Ion Exchange Eluate

The addition of an evaporator to reduce the volume of eluate sent to the ORNL Intermediate-Level Waste Evaporator has been included in the proposed flowsheet. If the eluate from ion exchange regeneration is not evaporated, its volume will amount to about 1680 gal per regeneration, or about 730 gpd. After neutralization, this would comprise approximately 10% of the average daily evaporator load (8000 gpd). However, since the eluate is essentially a low-level waste and would not require extensive shielding, evaporating it at the process waste plant in a small, lightly-shielded evaporator would be more practical than increasing the load on the ORNL Intermediate-Level Evaporator by 10%. Also, it is possible that some acid can be recovered during the evaporation, but this will have to be determined experimentally. Therefore, a small wiped-film evaporator capable of reducing the eluate volume by a factor of 30 was included in the process design of the plant. Overhead from the evaporator can be mixed with fresh concentrated nitric acid (15.3 M) for use as ion exchange column regenerant and thus circumvent the problem of disposing of this waste. The resulting volume of waste sent to the intermediate-level waste system will be about 56 gal per regeneration or 24 gpd. A wiped-film evaporator was tentatively chosen for this operation because of its capability for handling precipitates that may be formed during evaporation.

3.2.4 Modification of the Lime-Soda Plant for the Scavenging-Precipitation Ion-Exchange Process

Consideration has been given to using the present Lime-Soda Plant as a head-end facility for the SP-IX. The additional equipment required would include the polishing filters, the ion exchange columns, and auxiliary regeneration equipment. However, the lime-soda process would have to meet the hardness and pH specifications for the feed to the ion exchangers [i.e., < 10 ppm hardness (as calcium carbonate) and a pH of 11.7]. At present, the effluent from the Lime-Soda Plant has a hardness of 20 to 30 ppm and a pH below 11.0. Therefore, it would be necessary to add additional lime and sodium carbonate to reduce the hardness and increase the pH to 11.7. This would increase the volume of sludge

significantly. Alternatively, NaOH could be substituted for these reagents, but the feasibility of this step has not been investigated. Consequently, a recommendation that the Lime-Soda Plant be used for the SP-IX process cannot be made until extensive testing demonstrates that it can be operated under the same conditions as the equipment developed for the Low-Level Pilot Plant.

3.3 Clarification Ion-Exchange Process

The chemical flowsheet for the C-IX process is given in Fig. 7. The processing steps are similar to those used in the SP-IX process. The main difference between the two processes involves the location at which the bulk of the hardness is removed from the process waste. In the SP-IX process, this is accomplished in the head end at a high pH; in the C-IX process, it is accomplished in the cation exchange column at a pH near neutral. The head-end step in the C-IX process serves only to remove algae, colloids, and solids that may contain activity from the process waste. Removal of such materials is accomplished through the use of coagulants, followed by clarification to remove the precipitated solids from the system. Fewer solids are produced during the head-end step, but more eluate is produced by the ion exchange step. A detailed analysis of the advantages and disadvantages of the SP-IX and C-IX flowsheets is presented in Sect. 3.6. The Modified Clarification Ion-Exchange (Modified C-IX) process would use the lime-soda equipment for the head-end treatment step.

Raw waste is fed to the C-IX process at the design rate of 200 gpm or less. It is mixed with alum to yield concentrations up to 25 ppm [as $Al(SO_4)_3$] and with activated silica to give concentrations up to 1 ppm. The amounts of coagulants used are established by measuring the zeta potential of the floc resulting from coagulation of the colloids present in the process waste. Zeta potential measurements determine the electrophoretic mobility of the floc immediately after the flash-mixing step. Yee[5] states that a zero (with a tolerance of ± 5 mV) zeta potential is preferred in order to neutralize the mutual repelling forces of the colloids. However, Neumann[9] indicates that negative potentials as high as

ORNL DWG 71-10852 R1

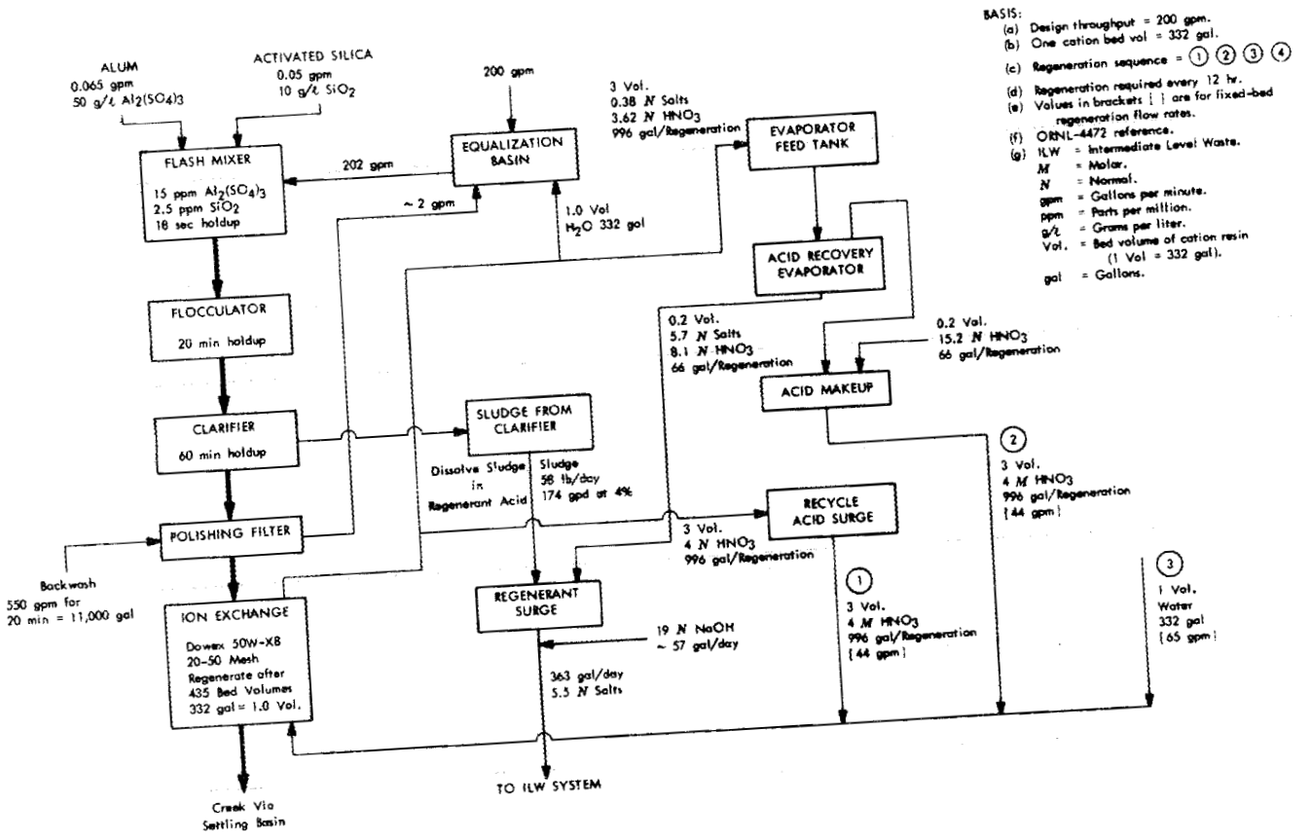

Fig. 7. Clarification Ion-Exchange Process.

-16 mV are preferred in order to reduce the volume of sludge produced and provide residual solids for precoating the filter beds. Since the system is designed for maximum dosages, operation at less than these levels should not present problems in the chemical feeding system. The silica system includes equipment for the batch production of an activated silica sol by reacting sodium bicarbonate with a silicate solution and aging the sol prior to feeding it to the flash-mixer.

The flash-mixer provides a 15-sec holdup time for mixing the coagulating chemicals with the waste. Flocculation and clarification take place in the agitated flocculator for 20 min, followed by clarification in a sludge blanket clarifier having a holdup time of about 60 min. Solids removed from the clarifier could be centrifuged if they are to be drum stored or shipped, but the recommended procedure involves dissolution in the ion exchange column eluate, which results in only one waste stream for the process. Clear water leaving the sludge blanket clarifier is pressurized and then clarified further by an anthracite-bed polishing filter, which reduces the turbidity to less than 0.05 Jackson Turbidity Units. An ion exchange bed of Dowex 50W-X8 strong-acid resin effectively decontaminates the waste with regard to ^{137}Cs and ^{90}Sr activity and removes the calcium and magnesium hardness at the same time. Further decontamination may be obtained, if required, by the addition of an anion exchange bed and an activated carbon bed.[5] Regeneration of the cation bed requires elution with three bed volumes of 4 N HNO_3 remaining from the prior regeneration (to remove most of the salts from the bed), followed by elution with three bed volumes of fresh 4 N HNO_3. The latter three bed volumes are retained for use in the next regeneration. Since only part of the nitric acid is used for removal of salts from the bed, it is necessary to evaporate the first acid fraction to recover most of the unused acid for subsequent regenerations. This nitrate removal reduces the quantity of waste salts significantly because all wastes sent to be hydrofractured must be neutralized first, and any excess nitric acid in the waste stream would be converted to sodium nitrate. The evaporator will reduce the volume of eluate by a factor of about 15 and provide approximately 75% of the fresh nitric acid for the next regeneration. Wash water used during the regeneration is recycled to the head end of the process since it does not contain appreciable activity.

3.4 Capital Costs

The capital costs for the SP-IX and C-IX flowsheets at a 200-gpm capacity have been estimated as part of the overall study. The estimates were prepared under the following assumptions:

(1) All costs are for 1971 and contain no provision for escalation. Delay in the construction of the plant will increase these costs by an estimated 5% per year at the present rate of construction cost escalation.

(2) Space for the plant is assumed to be available, and no allowance is made for site development or construction of the plant in a contaminated area.

(3) All services are assumed to be available at the plant, and no allowance is made for bringing in additional services.

(4) Feed for the plant will come from the present equalization basin, and the decontaminated waste will be discharged to the present settling basin or White Oak Creek.

(5) The costs for disposal of the wastes from the plant are included in the operating costs, but no estimates have been made to determine the cost of additional facilities (if needed) to handle these wastes.

(6) The equipment will be designed, fabricated, and installed by an outside vendor(s).

(7) Dismantling of the present Lime-Soda Plant is not included in this cost estimate. Also, no allowances are made for using the present plant equipment except in the case of the Modified C-IX process, where the Lime-Soda Plant could be used for the head-end step.

Information on the cost of the special process equipment was obtained primarily from vendors in the water treatment equipment business. The cost of tanks, pumps, piping, and insulation were obtained from Page,[10] with allowances being made for escalation between 1963 and 1971. W. G. Stockdale assisted in various sectors of the cost estimate. The data

for the Modified C-IX plant represent an approximation because it is not possible to determine the extent to which the present Lime-Soda Plant equipment could be used without a detailed engineering study. If extensive modifications are found to be necessary, the estimated costs will have to be corrected accordingly.

Results of the capital cost estimates are shown in Table 5. Three alternatives are shown: (1) the SP-IX process, (2) the C-IX process, and (3) the modified C-IX process.

Table 5. Capital Cost Estimates for 200-gpm SP-IX, C-IX, and Modified C-IX Flowsheets

Item	SP-IX	C-IX	Modified C-IX
Tanks	$ 66,600	$ 76,200	$ 61,100
Pumps	22,600	26,000	20,000
Special equipment			
Precipitation	38,300	38,300	
Polishing filters	7,500	7,500	7,500
Cation exchangers	60,900	60,900	60,900
Anion exchangers	13,300	13,300	13,300
Evaporator	36,200	36,200	36,200
Sludge handling	3,600		
Piping and insulation	45,900	50,700	39,000
Instruments and electrical	149,500	151,000	145,000
Building and foundations	119,500	119,500	80,000
(a) Subtotal	563,900	579,600	463,000
(b) Design and engineering, at 32% of (a)	180,500	185,500	148,200
Contingency, at 20% of (a) + (b)	148,900	153,000	122,200
	$893,300	$918,100	$733,400

The Modified C-IX process would have the lowest capital cost, primarily because of the savings associated with eliminating the precipitation equipment. However, as mentioned above, this assumes that extensive modifications of the Lime-Soda Plant equipment will not be required. Whether such an assumption is valid can be determined only through a detailed engineering study. If a new C-IX plant is considered, the cost will be approximately $25,000 more than a new SP-IX plant because of the more complex feeding system required. (In the C-IX system, additional tanks and pumps are needed for preparation of the activated silica reagent.)

A rough comparison can be made of the above capital costs with those actually paid for a 200,000-gpd SP-IX plant, completed at Reprocessing Plant X during the second quarter of 1971. However, adjustments should be made for the higher cost of labor at the new plant site (labor cost for Plant X = 1.83 x Knoxville labor cost per Dodge Index) and the additional lagoons, underground piping, and additional solids handling equipment required at that site. The installed cost of Plant X was about $900,000. A rough estimate indicates that about $160,000 should be subtracted for the additional facilities required at Plant X. This establishes an estimate of $740,000 for an ORNL plant. Although this is about $153,000 less than the estimate given in Table 5, it may be considered to be in fair agreement, taking into account the rough assumptions that were made and the difference in capacity for the two plants.

3.5 Operating Costs

Operating costs for any of the flowsheets under consideration should include the costs for disposal of the wastes generated by the process. However, methods to be used for disposing these wastes can only be suggested at the present time, and the costs associated with them can only be roughly estimated. For example, the sludge from the present Lime-Soda Plant is transported to Waste Pit No. 4, where the supernate is allowed to seep out. In this way, advantage is taken of the ion exchange properties of the soil to sorb activity that may be dissolved in the solution. This practice may be continued only until Pit No. 4 is filled. At that

time, a decision will have to be made concerning whether pit disposal of sludge will be continued or whether an alternative procedure such as hydrofracturing, burial of concentrated sludge in drums, or shipment of the sludge to the National Repository will be used. Ecological considerations will certainly play an important role in the ultimate decisions that will be made concerning the problem.

Because of the uncertainty in the waste disposal procedures to be used, two of the several possible modes of operation have been selected, and costs have been estimated for operation under the corresponding conditions. The first assumes that all sludges are buried in the waste pits and that the eluate is disposed of by hydrofracturing or some other procedure having a cost comparable to the cost of hydrofracturing. The cost assumed for pit disposal was 3¢ per gallon of sludge; the cost for hydrofracturing was assumed to be 30¢/gal. A second possible operating mode assumes that all wastes, including the sludges, are hydrofractured or disposed of in a comparable manner. It also assumes that the sludges could be hydrofractured at a 10% (by weight) concentration and that the cost of hydrofracturing would again be 30¢/gal.

Operating costs for the various processes include: (1) fixed charges, assumed at 10% of the original investment per year; (2) labor and supervision, assuming 8 hr per day of operating time and 1-1/2 shifts per week for supervision; (3) utilities including steam at $1.00 per thousand pounds, and (4) chemical costs taken primarily from current data in the "Oil, Paint, and Drug Reporter." Although the plant is designed for a 200-gpm feed rate, the operating costs are based upon operation at 150 gpm because this will probably be closer to the normal operating rate. The 50-gpm difference between design and operating feed rates serves as a safety factor to cover periods of plant downtime, additional quantities of process water from new or expanded facilities, and process water from facilities where treatment is only required on an emergency basis.

The results for pit disposal of the sludge are given in Table 6. Note that the waste handling costs for the C-IX flowsheets are more than twice those for the SP-IX flowsheet. The reason for this is that the C-IX flowsheet produces only an eluate solution (the sludge is

Table 6. Comparison of Operating Costs at 150 gpm, Assuming Pit Disposal of Sludge

		Process				
		SP-IX		C-IX		Modified C-IX
Capital cost (200-gpm plant), dollars		893,300		918,100		733,400
Operating costs, cents per 1000 gal of low-level waste						
Fixed charges, at 10% of original investment		113.3		116.5		93.0
Labor and supervision		53.9		53.9		53.9
Utilities		2.5		5.9		5.9
Chemicals						
Nitric acid	1.4		11.1		11.1	
Caustic soda	16.6		9.7		9.7	
Sulfuric acid	5.2					
Coagulants	—		1.1		1.1	
Total chemicals		23.2		21.9		21.9
Waste handling						
Sludge disposal (3¢/gal)	11.5					
Eluate disposal (30¢/gal)	1.9		30.8		30.8	
Total waste handling		13.4		30.8		30.8
Total operating cost		206.3		229.0		205.5
Annual operating cost, dollars		162,600		180,500		162,000

dissolved in the eluate in the C-IX process), which is more expensive to handle. The resulting high waste handling costs tend to make the C-IX process more expensive than the SP-IX process, but the charges for the Modified C-IX process are about the same as those for the SP-IX process.

The data in Table 7 indicate that, if all of the wastes are hydrofractured, the SP-IX process may be somewhat more expensive than the other two candidate processes. The reasons for this are twofold: (1) the SP-IX process must include a centrifuge to concentrate the sludge if it is to be hydrofractured; and (2) the sludge plus eluate volumes are still greater than the eluate volumes for the C-IX flowsheet. Therefore, it appears that, at the present time, the SP-IX process should be installed and pit disposal of the sludge should be specified. However, over the long term, consideration should be given to changing the C-IX flowsheet if more expensive methods such as hydrofracturing become necessary for both the sludges and the eluate. Further, studies should be made on both flowsheets to determine which operating conditions will minimize the waste volumes because the costs for waste handling are among the most expensive operating costs and there is a good probability that they could be much higher than the rough estimates given in Tables 6 and 7.

3.6 Comparison of the SP-IX and the C-IX Processes

A comparison of the SP-IX and the C-IX flowsheets is given in Table 8. Included are comparisons of DF's, as well as a list of advantages and disadvantages of each process. Also included is a comparison of the results obtained by operating each flowsheet in different modes or under different feed conditions. These modes include operation using the SP-IX process with recycle of the eluate to the head end and operation at high levels of phosphate in the waste feed to the plant. Alternatives examined for the C-IX process include the addition of an activated charcoal bed to the cation and anion systems and the installation of a continuous ion exchange system (Higgins column) instead of the fixed-bed system used for the base case.

Table 7. Comparison of Operating Costs at 150 gpm and Hydrofracture Disposal of All Wastes

		SP-IX		C-IX		Modified C-IX
Capital cost (200-gpm plant), dollars		917,100[a]		918,100		733,400
Operating costs, cents per 1000 gal of low-level waste						
Fixed charges, at 10% of original investment		116.3		116.5		93.0
Labor and supervision		53.9		53.9		53.9
Utilities		2.5		5.9		5.9
Chemicals						
Nitric acid	1.4		11.1		11.1	
Caustic soda	16.6		9.7		9.7	
Sulfuric acid	5.2					
Coagulants	—		1.1		1.1	
Total chemicals		23.2		21.9		21.9
Waste handling						
Sludge at 10 wt % +						
Eluate (30¢ gal)		48.1		30.8		30.8
Total operating cost		244.0		229.0		205.5
Annual operating cost, dollars		192,400		180,500		162,000

[a]Includes centrifuge for concentrating sludge to 10% solids.

Table 8. Comparison of Scavenging Precipitation Ion-Exchange and Clarification Ion-Exchange Processes

	Decontamination Factors								
	^{90}Sr	^{137}Cs	^{106}Ru	^{95}Zr ^{95}Nb	^{60}Co	TRE	^{131}I	Advantages	Disadvantages
Scavenging-Precipitation Ion-Exchange (SP-IX)									
a) With cation	1500	920	2.	5	7.	600	N.A.	Lowest capital costs and lowest operating cost if sludge can be discharged to pits. Less volume of eluate from ion exchange than for C-IX Process. Process has been demonstrated on a pilot-plant scale.	Purified water contains up to 400 ppm NaOH or 710 ppm Na_2SO_4 when neutralized. This will add 25 to 80 ppm of Na_2SO_4 to White Oak Creek. Volume of sludge will be greater than for C-IX Process, so operating costs may be higher if sludge has to be hydrofractured or drummed and shipped to the Repository.
b) With cation	1500	920	14.	5	11.	600	N.A.	Increased DF's for Ru and Co.	Increased volume of ion exchange column eluate will give higher capital and operating costs. Since anion bed capacity is 300 bed volumes compared to 2000 bed volumes for cation column, anion bed must have 6.7 times the volume of cation column (if regenerated on same cycle).
c) Operation at high levels of phosphate in Process Waste	Same as for (a) but with decreased capacity							Process can be run, but the capacity of the ion exchange system is decreased.	Capacity of the cation exchange column will be decreased, so more frequent regeneration will be required. Alumina column could be installed, but the capital and operating costs are too high.
d) Operation with recycle of eluate from ion exchange columns	Same as for (a)							All of the activity is retained in the sludge, and no waste is generated from elution of the ion exchange columns. Therefore, only one waste from the process (sludge) must be handled.	Will add approximately 78 ppm NO_3^- to purified water which will add 3 to 9 ppm of NO_3^- to White Oak Creek. This could upset the ecology of White Oak Lake. Volume of sludge from process will be 50% greater due to use of clay, which will increase operating cost significantly if sludge is to be hydrofractured or drummed and shipped to National Repository.
Clarification Ion-Exchange (C-IX)									
a) With cation treatment only	1950	200	5	19	1760	1350	1.2	Lowest sludge volume. Decontamination factors are comparable to those for SP-IX. No salts need to be added to waste except for NaOH to adjust pH to 7.0.	Higher capital cost. Larger volume of eluate from ion exchange columns. Higher acid consumption in ion exchange system.
b) With cation + anion treatment	1950	650	167	25	1760	4500	133	Slightly higher decontamination factors than obtained in the SP-IX Process or for cation treatment in the C-IX Process only.	Increased volume of NaOH eluate from anion exchange column will add about 7700 gal/day to ILW Evaporator unless eluate is evaporated on site. Additional cost of NaOH for anion regeneration will be about 80 cents/1000 gallons of waste. Capital cost of plant will be increased.
c) With cation + anion + charcoal bed	1950	950	76	7	1600	1900	830	Highest decontamination factors obtained on low-level waste. Process will produce water adequate for recycle to the Process Water System.	
d) With continuous cation exchange	Assumed to be comparable to fixed bed.							May be possible to regenerate cation columns stoichiometrically, so evaporator may not be needed.	
e) Modified C-IX Process (use Lime-Soda equipment for head end)	Same as for (a)							Will result in a considerable capital cost saving because the head-end equipment from the Lime-Soda plant will be used instead of new equipment.	Process head end will have to be demonstrated in the Lime-Soda Plant to prove it out.

3.6.1 Comparison of Costs

For the base case, in which the sludge from the SP-IX process is discharged to the pits (at 3¢/gal) and the eluate from both processes is hydrofractured (at 30¢/gal), the SP-IX process has the lowest capital and operating costs. If both systems include only the cation exchange columns, the SP-IX process will cost about $25,000 less than the C-IX process and will also have a slightly lower operating cost ($2.06 per thousand gallons for SP-IX vs $2.29 per thousand gallons for the C-IX). If a Modified C-IX process is considered (using the ORNL Lime-Soda equipment for the head end), its capital cost would be lower than that for the SP-IX process, and the operating cost would be about the same since the cost of disposing of the larger quantity of eluate to be hydrofractured (pit disposal is assumed for the sludge from the SP-IX process) just about balances the savings in capital cost.

If the total wastes from both the C-IX and SP-IX processes are hydrofractured, the operating costs for both the C-IX and the modified C-IX flowsheets will be lower than those for the SP-IX process (see Table 7) because of the higher cost of hydrofracturing the SP-IX sludge (30¢/gal). This comparison assumes that sludge could be hydrofractured at a 10% by weight concentration. If sludge could be hydrofractured at 30 to 40 wt %, the comparison would again favor the SP-IX process. These considerations emphasize the need for development of techniques for hydrofracturing sludge mixtures of varying concentrations and composition. Development of a method for eluate disposal by hydrofracturing should also be given high priority because this will probably be required for any of the flowsheets under consideration.

3.6.2 Comparison of Decontamination Factors

The data in Table 8 indicate that both the SP-IX and C-IX processes will adequately decontaminate ORNL process waste. However, it should be noted that the data for the SP-IX process are based on pilot-plant operation, whereas the C-IX data are based on bench-scale operation with process waste containing some added radioactive nuclides. Consequently, the same degree of confidence cannot be placed on each set of data. This again emphasizes the need for additional development work on the C-IX process.

A comparison of the decontamination data for the two processes reveals that the ^{137}Cs DF for the C-IX process is slightly lower than that obtained with the SP-IX process (200 vs 920, respectively). However, a DF of 200 will be adequate to decontaminate ORNL process waste. In contrast, the C-IX flowsheet provides higher ^{60}Co and rare earth DF's; again, however, both processes would be entirely satisfactory for the decontamination currently required at ORNL.

3.6.3 Overall Comparison of Processes

An overall appraisal of the two processes reveals that the utility of each depends primarily on what type of waste from the process can be disposed of most conveniently. For example, the SP-IX process produces large quantities of sludge but only a small volume of ion exchange column eluate. In fact, an alternative to the SP-IX process (recycle of eluate) generates no eluate for disposal but has an increased volume of sludge due to the clay required for adequate cesium decontamination. In contrast, the C-IX process generates no sludge (the sludge is dissolved in the eluate) but produces larger volumes of eluate from the ion exchange columns. Therefore, the choice of process will depend, to a large extent, on the most convenient waste disposal system available at the site. For the present, the choice at ORNL will probably be pit disposal; thus the SP-IX process should be selected. However, hydrofracturing may be substituted for pit disposal over the long term; in this case, the system should then be reevaluated to determine whether the C-IX process appears more promising. It is strongly recommended that the major equipment items be sized in such a manner that either process could be used in the plant. The only required changes would be the installation of new ion exchange resin and new equipment for a different type of chemical feed to the head end of the process.

A comparison of the decontaminated effluent from the two processes with respect to bulk chemical content shows that the C-IX process will have a much lower level than the SP-IX process. In the SP-IX flowsheet, caustic is added to make the waste alkaline (pH = 11.7-11.8). If waste of this pH is discharged to White Oak Creek without neutralization, the

water will contain 400 ppm of NaOH before dilution and about 20 ppm after dilution by the Creek. However, if the water is neutralized with H_2SO_4 before discharge (freshwater fish cannot tolerate a pH above 9.0), the water will contain 710 ppm of sodium sulfate before dilution and about 35 ppm after dilution.

The effluent from the columns containing strong acid resin in the C-IX process will be slightly acidic due to the presence of SO_4^{2-} and NO_3^- ions in the process waste. These ions will be converted to H_2SO_4 and HNO_3 during ion exchange. The resulting pH will be about 4.0, which can be neutralized by the addition of NaOH to the effluent from the plant. Since estimates indicate that approximately 18 ppm of NaOH would be required, the salt content before elution could be as high as 32 ppm prior to dilution and perhaps 2 ppm after dilution by White Oak Creek. The weight ratio $\left(\frac{\text{SP-IX}}{\text{C-IX}}\right)$ of bulk chemicals discharged by the two processes to White Oak Creek will be in the vicinity of 22/1.

3.6.4 Addition of Anion Exchange to the SP-IX or C-IX Processes

Estimates indicate that the addition of anion exchange to either the SP-IX or the C-IX process would more than double the operating costs and would increase the capital costs significantly. The large increases in operating costs stem from the high volume of NaOH required to regenerate the anion columns (8 anion bed volumes of 2 M NaOH) and the low capacity of the beds (300 anion bed volumes before breakthrough). The increase in capital cost for the SP-IX process is somewhat higher than that for the C-IX process because a larger anion bed would be required in the SP-IX process in order to match the cation bed regeneration cycle. For example, in the SP-IX process, the capacity of the cation bed is 2000 bed volumes; therefore, a matching anion bed (capacity, 300 bed volumes) would be about six to seven times the cation bed volume. For the C-IX process (where the cation bed capacity is 500 bed volumes), the anion bed would be about 1.7 times the cation bed volume.

Examination of the radioactive anion content of ORNL process waste (see Table 1) leads to the conclusion that an anion column will not be required in order to effectively decontaminate this waste stream under

current regulations. However, if an anion exchange cycle is required in the future, locating it at the source of contamination instead of in the Process Waste Plant will probably be less expensive. If the overhead stream from the ILW Evaporator contains significant amounts of ^{131}I, two possible procedures could be used. One would require that such wastes be held up for a longer period prior to evaporation in order to permit decay of the ^{131}I. Another solution would be the installation of an anion column on the evaporator overhead stream. The capital and operating costs for a small unit decontaminating this stream would certainly be far less expensive than if the same quantities of contamination had to be removed after dilution by the process waste.

3.6.5 Operation with Process Waste Containing High Levels of Phosphate

The efficiency of precipitation in both the SP-IX and C-IX processes is decreased when significant quantities of phosphate (> 1 ppm) are present in the process waste. In the SP-IX process, an alumina column was developed[4] for the removal of phosphate contamination from the waste. However, calculations showed that the column required for a 200-gpm plant would be very large and expensive to regenerate (see Sect. 3.2.1). Therefore, it is recommended that, when high phosphate levels are encountered, the plant be operated normally except for more frequent regeneration, which will be required as the result of carry-over of dissolved hardness from the head end to the ion exchange system.

In the C-IX process, it will be necessary to increase the alum dosage during periods of high phosphate concentrations. This will increase the alum consumption and waste volumes. Increases in capital costs for operation at high phosphate levels do not appear to be necessary for the C-IX process.

3.7 Consideration of a Continuous Ion Exchange System

A continuous ion exchange contactor has been tested to determine how effectively it could decontaminate ORNL process waste.[6] The contactor, a Higgins type measuring 4 in. in diameter and 8 in. long and containing Dowex 50W-X8 strong acid resin, was operated at flow rates varying between

8 and 15 gpm. The resin was regenerated with 4.8 N HNO_3. The resulting DF's were 750 for strontium, 10 to 20 for cesium, and 20 to 100 for rare earths. These DF's are lower than those obtained in the Scavenging-Precipitation Ion-Exchange Pilot Plant; however, it is believed the low values were due either to insufficient acid usage for regeneration (which tended to leave residual activity on the resin) or to the presence of colloids or algae (which carried activity through the bed without absorption).

A Higgins continuous contactor has been considered for use in the C-IX flowsheet as a substitute for the fixed-bed cation exchange column. The remainder of the process would be the same and would include a head-end precipitation step and evaporation of the column eluate to reduce its volume to an acceptable level. However, two fixed-bed cation exchange polishers are added downstream of the Higgins column in order to ensure that the DF's for cesium and strontium are comparable to those attainable by the SP-IX process. Routine regeneration of these beds would not be required since the hardness level of the effluent from the Higgins column will be essentially zero.

An estimate of the additional costs involved in the C-IX process with a Higgins contactor are as follows:

Capital cost of C-IX process (see Table 5)	$918,100
Cost of Higgins type column plus fixed-bed polishers	164,800
Less cost of fixed-bed columns plus makeup equipment	118,700
Capital cost of C-IX process with Higgins contactor	$964,200

It appears that the continuous system would cost about $46,100 more initially; this is comparable to an annual cost of 4.4¢ per thousand gallons of waste, assuming a fixed charge rate of 10% of the original investment.

The advantages that would tend to offset this higher capital cost lie in the lower operating costs, including lower nitric acid consumption and less steam for the evaporation of the eluate from the ion exchange

columns. However, because savings from these lower chemical and utility costs are estimated to be less than 4¢ per thousand gallons of waste, they do not offset the higher capital costs. Therefore, installation of a continuous ion exchange system does not appear to offer significant advantages over a fixed-bed system for the specific requirements of the ORNL process waste system.

4. LONG-RANGE CONSIDERATIONS

Results of the estimates concerning the effect of a new process treatment plant on compliance with current criteria showed that total activity levels would be reduced to below 100% of RCG but that significant quantities of contamination would still appear at White Oak Dam, primarily due to leaching from the burial grounds. Data in Table 4 indicate that the estimated discharge of ^{90}Sr to White Oak Creek would be about 0.9 Ci/year, assuming the installation of a treatment plant plus the diversion of various ORNL leaks to this plant. This would be equivalent to about 99 pCi of ^{90}Sr/liter, assuming a total White Oak Creek flow of about 2400 million gal annually (10 ft^3/sec). In examining the total radionuclide discharge (except for ^{3}H), the concentration in White Oak Creek would be about 208 pCi/liter, using the same assumptions and the data for the 1970 discharge rate.

If in the future further reduction is desirable, it would be necessary to add an anion exchange column to the process treatment plant for additional ^{106}Ru and ^{131}I decontamination. Removal of the ^{90}Sr leached from the various burial grounds (or alternatively, prevention of the leaching) would be necessary. Several possible methods for implementing this reduction have been given some consideration, but no detailed studies have been made.

4.1 Diversion of White Oak Creek Plus a Treatment Plant at White Oak Dam

The cost of a large treatment plant at White Oak Dam would be unreasonably large unless the uncontaminated water flowing into Bethel and Melton Valleys could be diverted around the contaminated areas. A

conceptual drawing of such an arrangement is shown in Fig. 8. A canal connected into the Bethel Valley Branch in the 4500 Building area would divert the flow away from the contaminated areas in Bethel Valley. A similar canal in Melton Valley would connect into the Bethel Valley canal just west of White Oak Lake, and then a combined canal south of the lake would carry the clean water to the discharge side of White Oak Dam. A rough estimate indicates that about 74% of the total flow of White Oak Creek would be diverted by the canal system, leaving about 26% of the flow to be treated.

The average flow of White Oak Creek is in the vicinity of 200 million gal per month, but it ranges from 100 to 500 million gallons per month. Therefore, a treatment plant would have to be designed for approximately 4.3 million gal per day, or 3000 gpm. It is recognized that such a plant could not handle the drainage during flash storms when the flow of White Oak Creek increases to 300 ft^3/sec or more. In this event, it would be necessary to provide a basin of sufficient capacity to hold up the excess water so that it could be processed by the plant.

Treatment of the contaminated water at White Oak Dam for strontium and cesium could be accomplished by a continuous ion exchange process (see Sect. 3.7) using a strong acid resin. Water treatment plants with a capacity for treating greater than 10 million gal/day are currently available from vendors; thus this system would be feasible, technically. However, disposal of the waste produced by regeneration of the resin would present a severe problem because of its volume.

The cost of diverting the uncontaminated water in White Oak Creek around the contaminated area and decontaminating the remainder of the stream cannot be determined until a detailed study of the sources of contamination downstream of the Process Waste Treatment Plant is completed. However, a rough estimate for installing the canal system shown in Fig. 8 is $4 to $6 million (1971 dollars). Installation of a treatment plant at White Oak Dam, plus an emergency basin, would probably bring the cost to greater than $10 million.

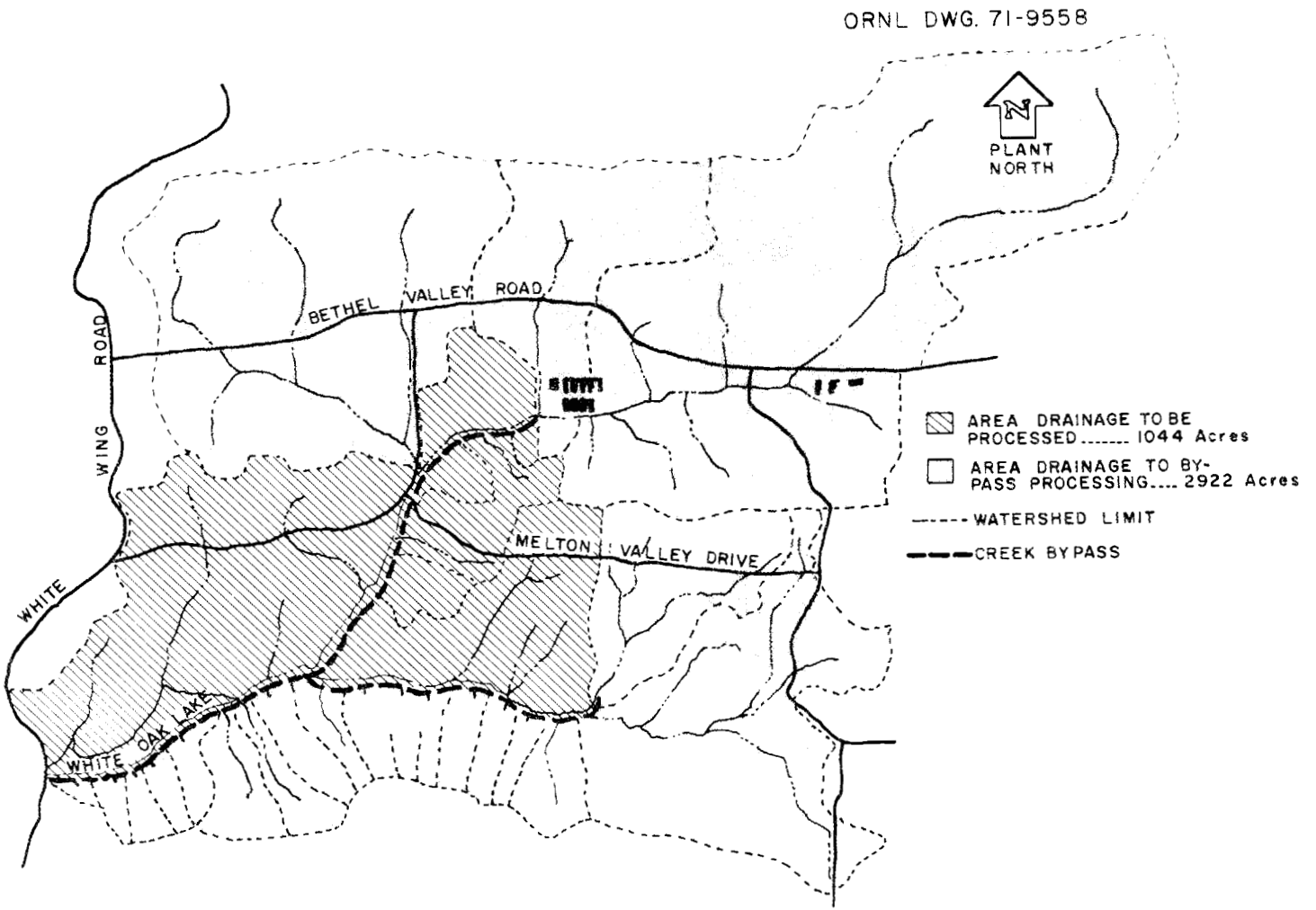

Fig. 8. White Oak Creek Bypass System.

4.2 Sealing of the Burial Grounds and Stream Dredging

One method that has been used at ORNL to prevent groundwater leaching in contaminated areas involves the use of an asphalt cover over the area to prohibit rainfall from reaching the contamination. This has been done to several abandoned intermediate-level waste pits and the former 7500 Building Waste Pond. In the latter case, the area was excavated, filled with gravel base, and then asphalted over; this was followed by Jennite sealer to prevent leaking through cracks in the asphalt.

Sealing of the burial grounds to prevent leaching would probably require that the areas be cleaned, graded, filled with base, and then asphalted and finished with a sealer. An extensive underground drainage system might also be required to prevent seepage of groundwater back underneath the asphalt cover. A very rough estimate of the cost for covering Burial Grounds Nos. 4 and 5, based on an overall cost of $\$3/ft^2$ (including the cover and a drainage system), came to $10 million. If Burial Ground No. 6 is included (recently put in service), the cost would be increased by about $10 million, for a total of $20 million. These costs should be considered only as order-of-magnitude figures.

An attempt at cleanup of the water flowing over White Oak Dam may have to include the excavation of contaminated sediment from the beds of White Oak Creek and White Oak Lake. The amount of dissolution from and the extent of these sources are not known and can only be determined by extensive studies. Therefore, cost estimates for this phase have not been made. Excavation of the bottom sediments would probably be very deleterious to the fish and aquatic life in White Oak Lake and would render it useless for future ecological studies.

4.3 Prevention of the Spread of Contamination from Under Building 3047

The data given in Sect. 2.2.2 indicated that 55 to 85% of the ^{90}Sr fed to the Lime-Soda Plant between January and March 1971 was measured at Manhole No. 114. It appeared that the bulk of this ^{90}Sr came from seepage to the process waste line beneath Building 3047. The difference in water flows in this line above and below Building 3047 has been

measured at approximately 24,000 gpd; therefore, it appears that a significant volume of contaminated water is leaking into the process waste system at that location. It is possible that a large portion of the ^{90}Sr from the same source of contamination flows untreated to White Oak Creek and could be associated with the increase in strontium activity levels in White Oak Creek during periods of heavy rainfall (see Sect. 2.2.3). Therefore, locating and isolating this source of ^{90}Sr might reduce the level of contamination in White Oak Creek beyond that reduction which would result from decreasing the activity currently released by the Lime-Soda Plant.

One solution suggested to correct this problem involves rerouting the process waste line under Building 3047 around the east end of the building and sealing off the bypassed section. However, because contamination of the sewers or Fifth Street Branch of White Oak Creek might result if the seepage flows elsewhere, installation of a sump and a system for pumping the resulting inleakage to the process waste system has also been suggested.[11] Another solution of a more permanent nature would intercept and divert the source of groundwater in the vicinity of Building 3047 before it becomes contaminated.

Locating the source or sources of the underground contamination will probably require extensive geological and hydrological study. One survey, made in 1951,[12] examined water samples for radioactivity taken from 45 different drill holes inside and around ORNL. Results indicated that 19 of the water samples showed activity levels of 6×10^{-7} μCi/cc or more, which was indicative of activity levels in excess of those observed to be occurring naturally in the area. Many of the active samples were located around the ORNL Settling Pond and along White Oak Creek, while others were located in the vicinity of the tank farms and other units of the waste disposal system. Two samples from wells located west and south of the present Building 3047 site had close to the highest activity levels measured (18.2 and 20.7×10^{-7} μCi/cc, respectively). The study indicated that the bedrock underlying large areas of ORNL is limestone, which is "susceptible to underground solutions and to the development of small voids with consequent increase in permeability and free movement

of ground waters which may have been contaminated from downward percolation of meteoric waters through the burial ground. That migration of such contamination has taken place is shown by the probing of drill holes located outside the boundaries of the burial ground." The data presented in Sect. 2.2.3 showing the effect of rainfall on the strontium activity in White Oak Creek tend to confirm the results of the above study.

5. APPENDIX

OAK RIDGE NATIONAL LABORATORY
OPERATED BY
UNION CARBIDE CORPORATION
NUCLEAR DIVISION

TRANSMITTAL

PROGRAM				DATE: March 11, 1971
JOB TITLE: ORNL Process Waste Treatment - White Oak Creek Bypass				RES NUMBER: 337056-242
ENGINEERING JOB NO	BUILDING NAME			BUILDING NUMBER

ATTACHMENTS			DISTRIBUTION	TYPE
SEPIAS	UNFOLDED	FOLDED		
		1	J. M. Holmes	☐ Approved for Construction
		1	R. M. Hill	☐ As-Built Drawings
			G. B. Child	☐ For Information
		1	RES File	☐ For Approval
				☐ Partial Engineering
				☐ Partial Engineering (Final)
				☒ Complete Engineering
				☐ Vendor's Data
				☐ A-E Review
				☒ Study & Cost Estimate

Preliminary Cost Estimate dated March 10, 1971

The above estimate shows order of magnitude funding required for CPFF installation of White Oak Creek Bypass to accommodate surface run-off from contamination-free upstream regions of Bethel and Melton Valley water sheds.

SIGNATURE W. R. Winsbro

W. R. Winsbro, General Engineering Division

COST ESTIMATE

General Engineering Division

DATE OF THIS ESTIMATE: 3-10-71

REQUESTING DIVISION: CHEM TECH

ENGINEER: CHILD

SHEET 1 of 2

WORK REQUEST: 337056-242

PROJECT TITLE AND BUILDING

ORNL PROCESS WASTE TREATMENT

WHITE OAK CREEK BYPASS

X-10

SUMMARY		CPFF	ORNL	TOTAL
12 ACRES CLEARING		10,800		
120,000 Yd³ EARTH EXCAVATION FOR METAL ARCH		300,000		
230 Yd³ EARTH EXCAVATION & BACKFILL FOR CORR. METAL PIPE		1,300		
12,000 Yd³ ROCK EXCAVATION, BLASTING		360,000		
60,000 Yd³ BACKFILL		120,000		
6 EA ROAD CROSSINGS		4,500		
JUNCTION BOXES AND SPILLWAYS		22,900		
PIPE SUPPORTS AT ROCK LOCATIONS		13,400		
16,960 LF MULTIPLATE PIPE ARCH AND METAL PIPE ARCH		2,571,500		
950 LF Φ CORRUGATED METAL PIPE		9,600		
EQUIPMENT OPERATOR		8,000		
RADIATION FACTOR		56,000		
LABOR FACTOR		412,000		
NET FIELD & SHOP		3,890,000		3,890,000
INDIRECT		1,245,000		1,245,000
SUBTOTAL, FIELD & SHOP		5,135,000		5,135,000

[X] P [ ] EXP. [ ] EQPT.

[ ] F [X] GPP [ ] AEC

ESTIMATED BY: DENNY

SUBMITTED BY: COREA

ORIGINALLY ESTIMATED — DATE — W.R.

LAST REVISION — DATE — W.R.

EST. NO. 1

Estimate Based On: [ ] Verbal Information [ ] Preliminary Design [X] Sketches [ ] Final Design [ ] Marked Prints

UCN 1298A
(3 10-63)

COST ESTIMATE (Continuation Sheet)

SHEET 2 of 2

SUMMARY		CPFF	ORNL	TOTAL
ENGINEERING			43,200	43,200
INDIRECT			21,600	21,600
CONTINGENCY		1,025,000	12,200	1,037,200
ESTIMATED COST		6,160,000	77,000	6,237,000
ESCALATION AFTER 7-1-71				363,000
TOTAL ESTIMATED COST				6,600,000

COST ESTIMATE SUMMARY

(INTERNAL USE ONLY)

WORK REQUEST NUMBER: 337056-242

DATE ESTIMATED: 3-10-71 DENNY

DATE CHECKED: 3-10-71 COREA

DATE EXTENDED:

ASSUMED CONTRACT DURATION _____ MONTHS

ENGINEERING % OF FIELD COSTS

CONTRACTS	DIRECT	INDIRECT	TOTAL
CPFF	3,890,000	1,245,000	5,135,000
FIXED PRICE			
A-E			
CONTG CPFF			1,025,000
CONTG F P			
CONTG A-E			
		SUBTOTAL	6,160,000

ORGDP OR Y-12	MATERIAL	LABOR	INDIRECT	TOTAL
CONTINGENCY				
SUBTOTAL				

ORNL	MAN DAYS				
INSPECTION ENG.					
I & C DIV. FIELD					
I & C DIV. SHOP FABRICATION					
SUBTOTAL					
P & E DIV.:					
FABRICATION & FIELD SERVICES					
SHOP					
FIELD					
SUBTOTAL					
PROJECT ENGINEER					
CONSTRUCTION ENGINEER	160	8,000			
FIELD ENGINEER					
DESIGN (TITLE III)	150	7,500			
DESIGN (TITLE II)	400	20,000			
DESIGN (TITLE I)	150	7,500			
COST ENGINEERING	4	200			
SUBTOTAL		43,200	21,600		64,800
ORNL SUBTOTAL					64,800

REMARKS:

CONTINGENCY	12,200
TOTAL ORNL	77,000
TOTAL GROSS ESTIMATE	6,237,000
~~ON HAND MATERIAL~~ ESCA	363,000
TOTAL ~~BALANCE~~	5,600,000

☐ CONTINGENCY NOT TAKEN ON ACTUAL COSTS, OR ON HAND ORDERED MATERIAL

UCN 1830A
3 64

6. REFERENCES

1. E. J. Witkowski, personal communication to F. E. Harrington, January 6, 1971.

2. Atomic Energy Commission R & D Contract No. AT-(40-1)-2746, Dorr Oliver, Inc., Jan. 5, 1961.

3. R. E. Brooksbank et al., Low-Radioactivity-Level Waste Treatment, Part II, Pilot Plant Demonstration of the Removal of Activity from Low-Level Process Wastes by a Scavenging-Precipitation Ion-Exchange Process, ORNL-3349 (May 13, 1963).

4. L. J. King and M. Ichikawa, Pilot Plant Demonstration of the Decontamination of Low-Level Process Wastes by a Recycle Scavenging-Precipitation Ion-Exchange Process, ORNL-3863 (December 1965).

5. W. C. Yee et al., Low-Level Radioactivity Waste Treatment: The Water Recycle Process, ORNL-4472 (July 1970).

6. I. R. Higgins, "Pilot Plant Test of Continuous Ion Exchange Treatment of Low Level Waste at Oak Ridge National Laboratory," UCNC Order 834-47027, October 1963.

7. Low Level Liquid Waste Treatment Facility, Summary Report No. 2, Report by Nuclear Fuel Services, Inc., West Valley, New York, Jan. 14, 1972.

8. "Eutrophication - A Review," State of California Water Quality Control Board Publication No. 34, p. 95, 1967.

9. W. Neuman, City of Chattanooga Water Co., personal communication to J. M. Holmes, June 1971.

10. J. S. Page, Estimator's Manual of Equipment Installation Costs, Gulf Publishing Co., Houston, Texas, 1963.

11. W. D. Burch et al., Final Report of the Committee on ORNL Waste Handling Practices (in preparation).

12. P. B. Stockdale, Geologic Conditions at the Oak Ridge National Laboratory (X-10) Area Relevant to the Disposal of Radioactive Waste, ORO-58 (August 1951).

INTERNAL DISTRIBUTION

1. H. H. Abee
2. T. A. Arehart
3. S. O. Auerbach
4. J. A. Auxier
5. E. E. Beauchamp
6. M. Bender
7. F. T. Binford
8. R. E. Blanco
9. J. O. Blomeke
10. N. E. Bolton
11. R. J. Braatz
12. R. E. Brooksbank
13. F. N. Browder
14. K. B. Brown
15. F. R. Bruce
16. W. D. Burch
17. G. C. Cain
18. L. T. Corbin
19. K. E. Cowser
20. J. A. Cox
21. F. L. Culler, Jr.
22. J. W. Curlin
23. D. M. Davis
24. G. J. Dixon
25. Wallace De Laguna
26. D. E. Ferguson
27. A. B. Fuller
28. J. H. Gibbons
29. J. H. Gillette
30. J. R. Gissel
31. F. E. Harrington
32. R. M. Hill
33. J. M. Holmes
34. W. H. Jordan
35. R. E. Lampton
36. J. L. Liverman
37. T. F. Lomenick
38. K. Z. Morgan
39. Gibson Morris
40. D. J. Nelson
41. J. P. Nichols
42. E. E. Pierce
43. M. E. Ramsey
44. A. F. Rupp
45. R. W. Schaich
46. M. J. Skinner
47. W. S. Snyder
48. E. G. Struxness
49. D. B. Trauger
50. W. E. Unger
51. H. O. Weeren
52. A. M. Weinberg
53. M. E. Whatley
54. W. R. Winsbro
55. E. J. Witkowski
56. R. G. Wymer
57-58. Central Research Library
59. Document Reference Section
60-70. Laboratory Records
71. Laboratory Records, ORNL-RC
72. ORNL Patent Office

EXTERNAL DISTRIBUTION

73. H. W. Hibbitts, AEC-ORO
74. B. M. Robinson, AEC-ORO
75. J. F. Wing, AEC-ORO
76. Research & Technical Support Division
77-78. TIC, Oak Ridge