OAK RIDGE NATIONAL LABORATORY LIBRARY

3 4456 0023822 2

ORNL-TM-4175

9-2

CENTRAL RESEARCH LIBRARY

DESIGN OF INDUCTION PROBES FOR MEASUREMENT OF LEVEL OF LIQUID METALS

C. V. Dodd
C. C. Cheng
C. W. Nestor, Jr.
R. B. Hofstra

OAK RIDGE NATIONAL LABORATORY
CENTRAL RESEARCH LIBRARY
DOCUMENT COLLECTION
LIBRARY LOAN COPY
DO NOT TRANSFER TO ANOTHER PERSON
If you wish someone else to see this document, send in name with document and the library will arrange a loan.

OAK RIDGE NATIONAL LABORATORY
OPERATED BY UNION CARBIDE CORPORATION • FOR THE U.S. ATOMIC ENERGY COMMISSION

This report was prepared as an account of work sponsored by the United States Government. Neither the United States nor the United States Atomic Energy Commission, nor any of their employees, nor any of their contractors, subcontractors, or their employees, makes any warranty, express or implied, or assumes any legal liability or responsibility for the accuracy, completeness or usefulness of any information, apparatus, product or process disclosed, or represents that its use would not infringe privately owned rights.

ORNL-TM-4175

Contract No. W-7405-eng-26

METALS AND CERAMICS DIVISION

DESIGN OF INDUCTION PROBES FOR MEASUREMENT OF LEVEL OF LIQUID METALS

C. V. Dodd C. C. Cheng
C. W. Nestor, Jr. R. B. Hofstra

MAY 1973

OAK RIDGE NATIONAL LABORATORY
Oak Ridge, Tennessee 37830
operated by
UNION CARBIDE CORPORATION
for the
U.S. ATOMIC ENERGY COMMISSION

OAK RIDGE NATIONAL LABORATORY LIBRARY
3 4456 0023822 2

CONTENTS

Page

ABSTRACT 1

1. INTRODUCTION 1

2. THEORETICAL ANALYSIS 2

3. COMPUTER CALCULATIONS FOR A PROBE INSIDE BISMUTH 24

4. MEASUREMENTS ON LIQUID LEVEL SYSTEM 33

5. SUMMARY AND CONCLUSIONS 37

6. ACKNOWLEDGMENTS 38

APPENDIX A — Computer Programs for a Liquid Level Probe Inside Coaxial Conductors 39

I. Introduction 40

II. Description of INNMUL 41

A. DRIVER Program 41
B. INNMUL Subroutine 45

1. XJJNT Function 51
2. XIINT Function 51
3. GAMCAL Subroutine 59

a. GCALC Subroutine 69
b. MODBES Subroutine 77
c. CMDBES Subroutine 82

i. COMKB Subroutine 85
ii. CMI Subroutine 90

III. Execution of INNMUL 93

A. TELINC.F4 Program 93
B. Data Description 99
C. Sample Data and Results 102

IV. ATTEN Program 108

DESIGN OF INDUCTION PROBES FOR MEASUREMENT OF LEVEL OF LIQUID METALS

C. V. Dodd C. C. Cheng[1]
C. W. Nestor, Jr.[2] R. B. Hofstra[2]

ABSTRACT

This report gives general analyses of eddy-current probes for measuring the level of liquid metals. The case of a coil encircling a level chamber and the case of a coil inside a level chamber have been solved theoretically, and computer programs are included in the Appendix for the latter case. As a specific example, we have designed a probe enclosed in molybdenum (a good conductor) to measure the level of molten bismuth (a poor conductor). By using a computer analysis, the sensitivity of the probe to level changes is maximized while the sensitivity to undesirable variables, such as temperature changes, is minimized. Experimental measurements demonstrated that the level could be measured to within ± 0.080 in. over a level range from 0 to 13 in. within a temperature range of 600° to 650°C. The high degree of success achieved in the probe design and measurements for this unfavorable combination of conductors indicate that highly accurate eddy-current measurements can be made with almost any combination of conductors.

1. INTRODUCTION

The ability to measure the level of a molten metal is very important in a number of industrial and chemical processes. We have analyzed the general problem of measuring the level of a conductive fluid by an induction, or eddy-current, process. The eddy-current probe consists of a long bifilar coil, which can either encircle a chamber containing the liquid metal or be inside a tube mounted in the chamber containing the liquid level. We obtained integral solutions which were valid for the chamber either empty or full, and, because of the probe length, we assumed that the response of the probe to levels between these two extremes was approximately linear. Later experimental measurements showed this to be an excellent assumption. A relaxation solution could

[1]Consultant from the University of Tennessee.

[2]Mathematics Division.

be used to calculate the probe responses to various levels of liquid metal, but was judged to be too expensive to run for the additional information gained. While the technique is very general and can be applied to almost any conductive fluid, we analyzed a system that consisted of a coil encased in molybdenum (a good conductor) used to measure the level of molten bismuth (a poor conductor). The high degree of success achieved in the probe design and measurements for this unfavorable combination of conductors leads us to conclude that highly accurate eddy-current techniques can be designed and applied for level measurements with almost any combination of conductors.

2. THEORETICAL ANALYSIS

The general configuration to be considered is an axially symmetric driving coil located concentrically with an arbitrary number of cylindrical conductors with arbitrary thickness, permeability, permittivity, and conductivity. For simplicity, we assume that all media are linear, isotropic, and homogeneous, and the driving current is time-harmonic with frequency, ω. Then, the current density $\vec{J}$ and vector potential $\vec{A}$ will have only azimuthal components in cylindrical coordinates:

$$\vec{J}(\vec{x}) = J(r,z)\,\hat{e}_\theta \tag{1}$$

and

$$\vec{A}(\vec{x}) = A(r,z)\,\hat{e}_\theta \tag{2}$$

where $\hat{e}_\theta$ is an azimuthal unit vector. The vector potential at (r,z), produced by a driving coil with a current density $J(r',z')$ at (r',z'), can be expressed as

$$A(r,z) = \iint_{\substack{\text{Driving}\\ \text{Coil}}} G(r,z;r',z')\,J(r',z')\,dr'dz' \tag{3}$$

where $G(r,z;r',z')$ is the Green's function for a unit δ-function current

at (r',z'). In a linear, isotropic, homogeneous medium, the Green's function satisfies[3]

$$\left[\frac{\partial^2}{\partial r^2} + \frac{1}{r}\frac{\partial}{\partial r} - \frac{1}{r^2} + \frac{\partial^2}{\partial z^2} - j\omega\mu\sigma + \omega^2\mu\epsilon\right] G(r,z;r',z')$$

$$= -\mu\ \delta(r-r')\ \delta(z-z')\ . \tag{4}$$

where μ, ϵ, and σ are the permeability, permittivity, and conductivity of the medium. The solution of Eq. (4) for each medium must also satisfy the proper boundary conditions.

We shall first consider a δ-function coil coaxial with $k+k'-2$ cylindrical conductors; $k-1$ of them inside the coil and $k'-1$ of them outside the coil, as shown in Fig. 1. The general solution of Eq. (4) in any region, n, may be obtained by separation of variables. Setting

$$G^{(n)}(r,z;r',z') = R(r)\ Z(z)$$

and dividing Eq. (4) by $R(r)\ Z(z)$ gives:

$$\frac{1}{R(r)}\frac{\partial^2 R(r)}{\partial r^2} + \frac{1}{rR(r)}\frac{\partial R(r)}{\partial r} + \frac{1}{Z(z)}\frac{\partial^2 Z(z)}{\partial z^2} - \frac{1}{r^2}$$

$$+ \omega^2\mu_n\epsilon_n - j\omega\mu_n\sigma_n = 0\ . \tag{5}$$

The subscripts n on the permeability, permittivity, and conductivity denote the values of these parameters in the region n. We shall choose the separation "constant", α^2, to be negative and define

$$\alpha_n^2 = \alpha^2 + j\omega\mu_n\sigma_n - \omega^2\mu_n\epsilon_n\ .$$

---

[3] C. V. Dodd and W. E. Deeds, J. Appl. Phys. 39, 2829-2838 (1968).

ORNL-DWG 72-3047

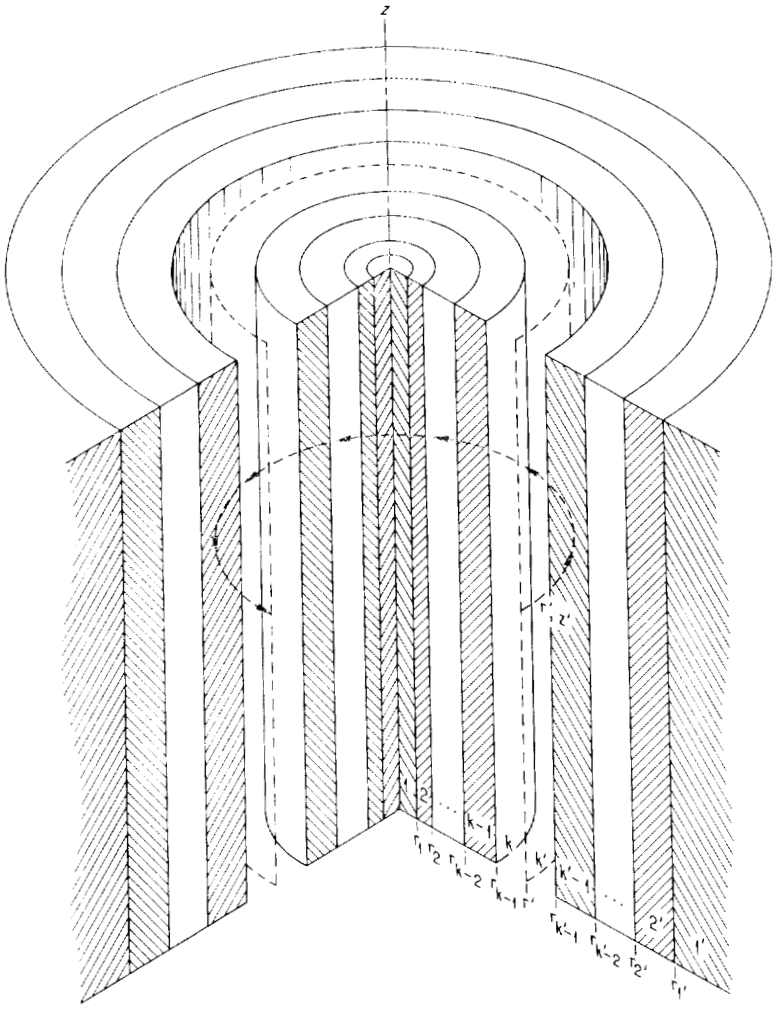

Fig. 1. Multiple Concentric Conductors in the Presence of a Delta Function Coil.

Then we can write for the z dependence

$$\frac{1}{Z(z)} \frac{\partial^2 Z(z)}{\partial z^2} = -\alpha^2 \ . \tag{6}$$

Solving this differential equation gives:

$$Z(z) = A \sin \alpha(z-z_o) + B \cos \alpha(z-z_o) \ . \tag{7}$$

We can drop the sine term due to the symmetry about $z = z'$.

The radial term has the following dependence:

$$\frac{r^2 d^2 R(r)}{dr^2} + \frac{r dR(r)}{dr} - (r^2 \alpha_n^2 + 1)\, R(r) = 0 \ . \tag{8}$$

This differential equation has the following solution:

$$R(r) = C I_1(\alpha_n r) + D K_1(\alpha_n r) \ , \tag{9}$$

where $I_1(\alpha_n r)$ and $K_1(\alpha_n r)$ are modified Bessel functions of first order.

The complete solution to the Green's function in each region is an integral over the separation constant α:

$$G^{(n)}(r,z;r',z') = \int_0^\infty \Big[C_n(\alpha)\, I_1(\alpha_n r)$$

$$+ D_n(\alpha)\, K_1(\alpha_n r) \Big] \cos \alpha(z-z')\, d\alpha \tag{10}$$

for $n = 1,2, \ . \ . \ . \ k;\ 1',2', \ . \ . \ . \ k'$. The unknown constants are functions of the separation constant α and different for each region. We shall use the boundary conditions to solve for these unknown constants. In order to obtain a very general solution for an arbitrary number of cylindrical conductors inside and outside the coil, we shall use a matrix technique.

In the innermost region the coefficient of $K_1(\alpha_1 r)$, $D_1(\alpha)$, must be zero, and in the outermost region $C_{1'}$ must be zero in order for the solution to remain finite. (The outer radius of the outermost region is infinite.) We shall use the boundary conditions in order to determine the other constants. We have the following boundary conditions for the Green's function (which are the same as those for the vector potential) between regions n and n+1 shown in Fig. 2:

$$G^{(n)}(r_n,z;r',z') = G^{(n+1)}(r_n,z;r',z') \tag{11}$$

and

ORNL-DWG 72-3046

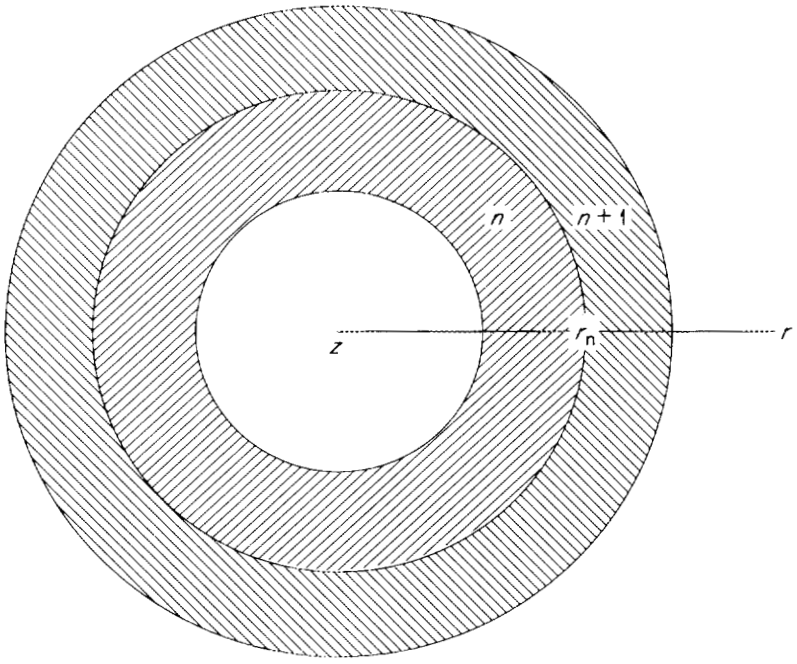

Fig. 2. Top View of a Typical Boundary Between Two Regions.

$$\frac{1}{\mu_n}\left[\frac{G^{(n)}}{r_n}(r_n,z;r',z') + \frac{\partial}{\partial r}G^{(n)}(r,z;r',z')\Big|_{r=r_n}\right]$$

$$= \frac{1}{\mu_{n+1}}\left[\frac{G^{(n+1)}}{r_n}(r_n,z;r',z') + \frac{\partial}{\partial r}G^{(n+1)}(r,z;r',z')\Big|_{r=r_n}\right] + \delta(z-z')\delta(r_n-r') \ . \tag{12}$$

Using the Green's functions from Eq. (10) in Eq. (12) we obtain:

$$\int_0^\infty C_n(\alpha)\,\frac{\alpha_n}{\mu_n}\left[\frac{I_1(\alpha_n r_n)}{\alpha_n r_n} + \frac{d}{d\alpha_n r_n}\,I_1(\alpha_n r_n)\right] + D_n(\alpha)\,\frac{\alpha_n}{\mu_n}\left[\frac{K_1(\alpha_n r_n)}{\alpha_n r_n}\right.$$

$$\left. + \frac{d}{d\alpha_n r_n}\,K_1(\alpha_n r_n)\right]\cos\alpha(z-z')\,d\alpha$$

$$= \int_0^\infty C_{n+1}(\alpha)\,\frac{\alpha_{n+1}}{\mu_{n+1}}\left[\frac{I_1(\alpha_{n+1} r_n)}{\alpha_{n+1} r_n} + \frac{d}{d\alpha_{n+1} r_n}\,I_1(\alpha_{n+1} r_n)\right]$$

$$+ D_{n+1}(\alpha)\,\frac{\alpha_{n+1}}{\mu_{n+1}}\left[\frac{K_1(\alpha_{n+1} r_n)}{\alpha_{n+1} r_n} + \frac{d}{d\alpha_{n+1} r_n}\,K_1(\alpha_{n+1} r_n)\right]\cos\alpha(z-z')\,d\alpha$$

$$+ \delta(z-z')\,\delta(r_n-r')\,. \qquad (13)$$

We shall make use of the relations

$$\frac{1}{z}\,K_1(z) + \frac{d}{dz}\,K_1(z) = -K_o(z) \text{ and } \frac{1}{z}\,I_1(z) + \frac{d}{dz}\,I_1(z) = I_o(z) \qquad (14)$$

and define

$$\beta_n = \left(\frac{\mu_o}{\mu_n}\right)\alpha_n = \frac{\mu_o}{\mu_n}\left(\alpha^2 + j\omega\mu_n\sigma_n - \omega^2\mu_n\epsilon_n\right)^{1/2}. \qquad (15)$$

Making these simplifications and multiplying both sides of Eq. (13) by $\mu_o \cos\alpha'(z-z')$ and integrating from minus to plus infinity gives:

$$\int_{-\infty}^{+\infty}\int_0^\infty \left\{C_n(\alpha)\beta_n I_o(\alpha_n r_n) - D_n(\alpha)\beta_n K_o(\alpha_n r_n)\right\}\cos\alpha(z-z')\cos\alpha'(z-z')\,d\alpha\,d(z-z')$$

$$= \int_{-\infty}^{+\infty}\int_0^\infty \left\{C_{n+1}(\alpha)\beta_{n+1} I_o(\alpha_{n+1} r_n) - D_{n+1}(\alpha)\beta_{n+1} K_o(\alpha_{n+1} r_n)\right\}\cos\alpha(z-z')\cos\alpha'(z-z')\,d\alpha\,d(z$$

$$+ \mu_o\int_{-\infty}^{\infty}\delta(z-z')\,\delta(r_n-r')\cos\alpha'(z-z')\,d(z-z')\,. \qquad (16)$$

We can reverse the order of integration of the integrals containing Bessel functions and use the Fourier integral theorem,

$$\frac{1}{\pi}\int_0^{\infty} f(\alpha)\left\{\int_{-\infty}^{\infty} \cos\alpha(z-z')\cos\alpha'(z-z')\,d(z-z')\right\}d\alpha = f(\alpha') .$$

Equation (16) then becomes:

$$C_n\beta_n I_o(\alpha_n r_n) - D_n\beta_n K_o(\alpha_n r_n) = C_{n+1}\beta_{n+1} I_o(\alpha_{n+1} r_n) - D_{n+1}\beta_{n+1} K_o(\alpha_{n+1} r_n)$$

$$+ \frac{\mu_o}{\pi}\,\delta(r_n - r') . \qquad (17)$$

A similar operation on Eq. (11) gives:

$$C_n I_1(\alpha_n r_n) + D_n K_1(\alpha_n r_n) = C_{n+1} I_1(\alpha_{n+1} r_n) + D_{n+1} K_1(\alpha_{n+1} r_n) . \qquad (18)$$

Equations (17) and (18) represent the relations between the constants for any two regions inside the coil. We shall now solve for all the unknown constants in the following manner. Since the innermost region has only one unknown constant, C_1, we shall solve for the unknown constants in the second region in terms of it. Next we shall solve for the unknown constants in the third region in terms of C_1, then the fourth, until we reach the region containing the coil, k. We shall do the same thing for the regions outside the coil, starting with the outermost and working inwards, solving for each region in terms of D_1', until we reach the region k'. We shall then use Eq. (17) and Eq. (18) for the coil regions k and k'. This will give two equations for the two unknowns, C_1 and $D_{1'}$, and we can solve for them. This will then allow us to write the expression for the unknown constants in any region.

Solving Eqs. (17) and (18) for the unknown constants in any region, n+1, in terms of the unknown constants in region n, where the coil is not between the regions, gives:

$$C_{n+1} = \left[K_o(\alpha_{n+1}r_n)\, I_1(\alpha_n r_n) + \frac{\beta_n}{\beta_{n+1}}\, I_o(\alpha_n r_n)\, K_1(\alpha_{n+1}r_n)\right]\alpha_{n+1}r_n C_n$$

$$+ \left[K_o(\alpha_{n+1}r_n)\, K_1(\alpha_n r_n) - \frac{\beta_n}{B_{n+1}}\, K_o(\alpha_n r_n)\, K_1(\alpha_{n+1}r_n)\right]\alpha_{n+1}r_n D_n\ , \qquad (19)$$

and

$$D_{n+1} = \left[I_o(\alpha_{n+1}r_n)\, I_1(\alpha_n r_n) - \frac{\beta_n}{\beta_{n+1}}\, I_o(\alpha_n r_n)\, I_1(\alpha_{n+1}r_n)\right]\alpha_{n+1}r_n C_n$$

$$+ \left[I_o(\alpha_{n+1}r_n)\, K_1(\alpha_n r_n) + \frac{\beta_n}{\beta_{n+1}}\, K_o(\alpha_n r_n)\, I_1(\alpha_{n+1}r_n)\right]\alpha_{n+1}r_n D_n \qquad (20)$$

The denominators have been simplified by use of the Wronskian relation:

$$\beta_{n+1}\left[I_o(\alpha_{n+1}r_n)\, K_1(\alpha_{n+1}r_n) + I_1(\alpha_{n+1}r_n)\, K_o(\alpha_{n+1}r_n)\right] = \frac{\beta_{n+1}}{\alpha_{n+1}r_n}\ .$$

We can write Eqs. (19) and (20) in matrix notation:

$$\underset{\sim}{a}_{n+1} = \underset{\sim}{T}_{n+1,n}\, \underset{\sim}{a}_n$$

$$= \begin{bmatrix} C_{n+1} \\ D_{n+1} \end{bmatrix} = \begin{bmatrix} T_{11}(n+1,n) & T_{12}(n+1,n) \\ T_{21}(n+1,n) & T_{22}(n+1,n) \end{bmatrix} \begin{bmatrix} C_n \\ D_n \end{bmatrix} = \begin{bmatrix} T_{11}(n+1,n)C_n + T_{12}(n+1,n)D_n \\ T_{21}(n+1,n)C_n + T_{22}(n+1,n)D_n \end{bmatrix}. \qquad (21)$$

The elements of the 2 x 2 transformation matrix, $\underset{\sim}{T}_{n+1,n}$, are simply the coefficients of C_n and D_n in Eqs. (19) and (20) and are

$$T_{11}(n+1,n) = \left[K_o(\alpha_{n+1}r_n)\, I_1(\alpha_n r_n) + \frac{\beta_n}{\beta_{n+1}}\, I_o(\alpha_n r_n)\, K_1(\alpha_{n+1}r_n)\right]\alpha_{n+1}r_n\ , \qquad (22)$$

$$T_{12}(n+1,n) = \left[K_o(\alpha_{n+1}r_n)\ K_1(\alpha_n r_n) - \frac{\beta_n}{\beta_{n+1}} K_o(\alpha_n r_n)\ K_1(\alpha_{n+1}r_n)\right]\ \alpha_{n+1}r_n\ , \tag{23}$$

$$T_{21}(n+1,n) = \left[I_o(\alpha_{n+1}r_n)\ I_1(\alpha_n r_n) - \frac{\beta_n}{\beta_{n+1}} I_o(\alpha_n r_n)\ I_1(\alpha_{n+1}r_n)\right]\ \alpha_{n+1}r_n\ , \tag{24}$$

and

$$T_{22}(n+1,n) = \left[I_o(\alpha_{n+1}r_n)\ K_1(\alpha_n r_n) + \frac{\beta_n}{\beta_{n+1}} K_o(\alpha_n r_n)\ I_1(\alpha_{n+1}r_n)\right]\ \alpha_{n+1}r_n\ . \tag{25}$$

This transformation matrix gives the relation between the constants in any two regions not containing the coil between them. It is the same for regions inside and outside the coil, with the exception that n should be replaced by n' for regions outside the coil to correspond to our notation.

Starting from the innermost region (n=1) and going to the second gives:

$$\underset{\sim}{a}_2 = \underset{\sim}{T}_{2,1}\ \underset{\sim}{a}_1 = \underset{\sim}{T}_{2,1}\begin{bmatrix} C_1 \\ 0 \end{bmatrix}\ . \tag{26}$$

The constants in the third region can be obtained by:

$$\underset{\sim}{a}_3 = \underset{\sim}{T}_{3,2}\ \underset{\sim}{a}_2 = \underset{\sim}{T}_{3,2}\ \underset{\sim}{T}_{2,1}\ \underset{\sim}{a}_1\ , \tag{27}$$

and the constants in the fourth region by:

$$\underset{\sim}{a}_4 = \underset{\sim}{T}_{4,3}\ \underset{\sim}{a}_3 = \underset{\sim}{T}_{4,3}\ \underset{\sim}{T}_{3,2}\ \underset{\sim}{T}_{2,1}\ \underset{\sim}{a}_1\ . \tag{28}$$

The general expression for the nth region is

$$\underset{\sim}{a}_n = \underset{\sim}{T}_{n,n-1}\ \underset{\sim}{T}_{n-1,n-2} \cdots \underset{\sim}{T}_{3,2}\ \underset{\sim}{T}_{2,1}\ \underset{\sim}{a}_1\ . \tag{29}$$

To make our expressions shorter, we shall define:

$$\underset{\sim}{V}(n) \equiv \underset{\sim}{T}_{n,n-1}\, \underset{\sim}{T}_{n-1,n-2} \cdots \underset{\sim}{T}_{3,2}\, \underset{\sim}{T}_{2,1} \,, \tag{30}$$

and when $n = k$ we shall drop the argument. Thus we have

$$\underset{\sim}{a}_n = \underset{\sim}{V}(n)\, \underset{\sim}{a}_1 \text{ and } \underset{\sim}{a}_k = \underset{\sim}{V}\, \underset{\sim}{a}_1 = \underset{\sim}{V} \begin{bmatrix} C_1 \\ 0 \end{bmatrix} . \tag{31}$$

We have very similar equations for the regions outside the coil:

$$\underset{\sim}{a}_{2'} = \underset{\sim}{T}_{2',1'}\, \underset{\sim}{a}_{1'} = \underset{\sim}{T}_{2',1'} \begin{bmatrix} 0 \\ D_{1'} \end{bmatrix} , \tag{32}$$

$$\underset{\sim}{a}_{n'} = \underset{\sim}{U}(n')\, \underset{\sim}{a}_{1'} \text{ and } \underset{\sim}{a}_{k'} = \underset{\sim}{U}\, \underset{\sim}{a}_{1'} = \underset{\sim}{U} \begin{bmatrix} 0 \\ D_{1'} \end{bmatrix} \tag{33}$$

where we have made a similar definition:

$$\underset{\sim}{U}(n') \equiv \underset{\sim}{T}_{n',n'-1}\, \underset{\sim}{T}_{n'-1,n'-2} \cdots \underset{\sim}{T}_{3',2'}\, \underset{\sim}{T}_{2',1'} \tag{34}$$

and we have dropped the argument when $n' = k'$. Thus, we can now write the constants in any region in terms of the constant in the innermost region, $\underset{\sim}{a}_1 = \begin{bmatrix} C_1 \\ 0 \end{bmatrix}$, or the outermost region, $\underset{\sim}{a}_{1'} = \begin{bmatrix} 0 \\ D_{1'} \end{bmatrix}$ by means of the transformation matrices, $\underset{\sim}{V}(n)$ and $\underset{\sim}{U}(n)$. We shall write Eqs. (17) and (18) for the regions on either side of the coil, k and k'. Here we have $r_n = r'$, so that $\delta(r_n - r') = 1$. Also $\alpha_k = \alpha_{k'} = \alpha_o$ and $\beta_k = \beta_{k'} = \beta_o$, so that the equations become:

$$C_k \beta_o I_o\, (\alpha_o r') - D_k \beta_o K_o\, (\alpha_o r') =$$

$$C_{k'} \beta_o I_o\, (\alpha_o r') - D_{k'} \beta_o K_o\, (\alpha_o r') + \frac{\mu_o}{\pi} , \tag{35}$$

and

$$C_k I_1(\alpha_o r') + D_k K_1(\alpha_o r') = C_{k'} I_1(\alpha_o r') + D_{k'} K_1(\alpha_o r') . \tag{36}$$

Using our matrix notation, we can write

$$C_k = |\underset{\sim}{a}_k|_1 = \sum_{j=1}^{2} V_{1j} \, |\underset{\sim}{a}_1|_j = V_{11} C_1 \, , \tag{37}$$

$$D_k = V_{21} C_1 \, , \tag{38}$$

$$C_{k'} = U_{12} D_{1'} \, , \tag{39}$$

and

$$D_{k'} = U_{22} D_{1'} \, . \tag{40}$$

Thus, by writing the constants in Eqs. (35) and (36) in terms of C_1 and $D_{1'}$, we can get:

$$C_1 \left[V_{11} I_o(\alpha_o r') - V_{21} K_o(\alpha_o r') \right] = D_{1'} \left[U_{12} I_o(\alpha_o r') - U_{22} K_o(\alpha_o r') \right] + \frac{\mu_o}{\beta_o \pi} \tag{41}$$

and

$$C_1 \left[V_{11} I_1(\alpha_o r') + V_{21} K_1(\alpha_o r') \right] = D_{1'} \left[U_{12} I_1(\alpha_o r') + U_{22} K_1(\alpha_o r') \right] \, . \tag{42}$$

We now have two equations and only two unknowns. Solving these gives

$$C_1 = \frac{\left[U_{12} I_1(\alpha_o r') + U_{22} K_1(\alpha_o r') \right]}{U_{22} V_{11} - U_{12} V_{21}} \, \frac{\mu_o r'}{\pi} \tag{43}$$

and

$$D_{1'} = \frac{\left[V_{11} I_1(\alpha_o r') + V_{21} K_1(\alpha_o r') \right]}{U_{22} V_{11} - U_{12} V_{21}} \, \frac{\mu_o r'}{\pi} \tag{44}$$

where the denominator has again been simplified by use of the Wronskian, and the fact that $\beta_o = \alpha_o$. Now we can substitute the values of the

constants in Eqs. (43) and (44) into Eqs. (31) and (33) to give the constants in any region. We can write the Green's function for any region inside the coil as

$$G^{(n)}(r,z;r',z') =$$

$$\frac{\iota_o r'}{\pi}\int_0^\infty \frac{\left[V_{11}(n)I_1(\alpha_n r) + V_{21}(n)K_1(\alpha_n r)\right]\left[U_{12}I_1(\alpha_o r') + U_{22}K_1(\alpha_o r')\right]}{\left[U_{22}V_{11} - U_{12}V_{21}\right]} \cos\alpha(z-z')d\alpha \ . \tag{45}$$

The Green's function for any region outside the coil is

$$G^{(n')}(r,z;r',z') =$$

$$\frac{\iota_o r'}{\pi}\int_0^\infty \frac{\left[U_{12}(n')I_1(\alpha_{n'} r) + U_{22}(n')K_1(\alpha_{n'} r)\right]\left[V_{11}I_1(\alpha_o r') + V_{21}K_1(\alpha_o r')\right]}{\left[U_{22}V_{11} - U_{12}V_{21}\right]} \cos\alpha(z-z')d\alpha \tag{46}$$

Once we have the Green's function, we can get the vector potential by using Eq. (3). The most common type of coil is one of rectangular cross section, as shown in Fig. 3. We added another region, that contains the coil, and designated it region c. For a densely and uniformly wound coil, the current density $J(r',z')$ is approximately:

$$J(r',z') = n_c I \tag{47}$$

where n_c is the number of turns per unit area, and I is the current per turn. Substituting Eqs. (47) and (45) into Eq. (3) gives the vector potential for any region inside the coil as

$$A^{(n)}(r,z) = n_c I \int_{\ell_1}^{\ell_2}\int_{r_1}^{r_2} G^{(n)}(r,z;r',z')\, dr'dz' \ . \tag{48}$$

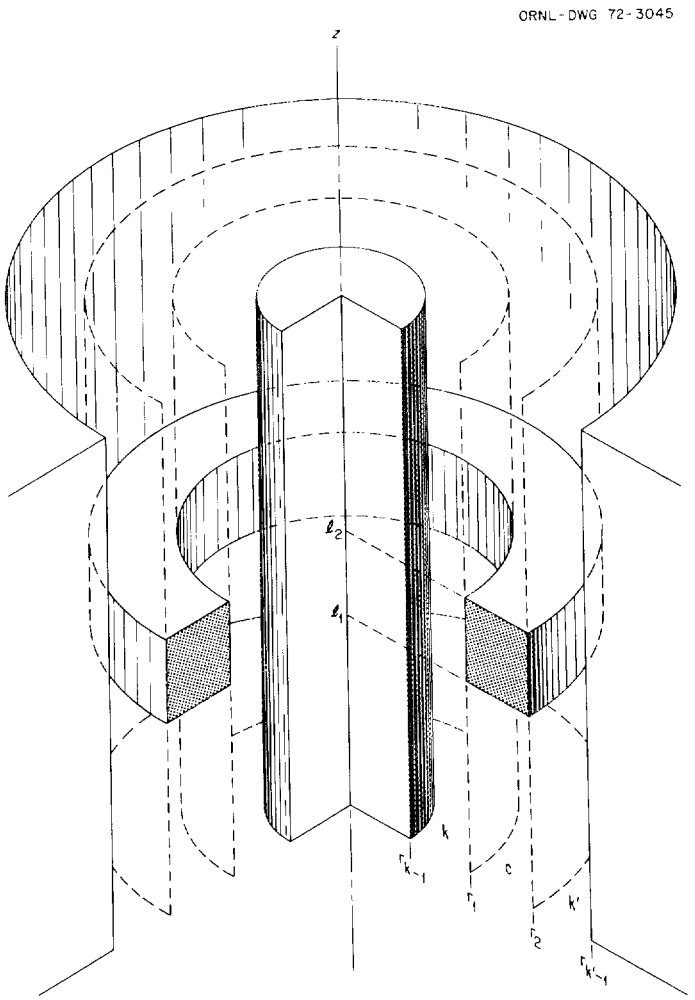

Fig. 3. Coil with Rectangular Cross Section Concentric with Cylindrical Conductors.

Reversing the order of integration and integrating over the dimensions of the coil gives

$$A^{(n)}(r,z) = \frac{n_c I \mu_o}{\pi} \int_0^\infty \frac{\left[\sin \alpha(z-\ell_1) - \sin \alpha(z-\ell_2)\right]\left[V_{11}(n) I_1(\alpha_n r) + V_{21}(n) K_1(\alpha_n r)\right]}{\alpha \alpha_o^2 \, (U_{22}V_{11} - U_{12}V_{21})}$$

$$\times \left[U_{12} I(r_2, r_1) + U_{22} K(r_2, r_1)\right] d\alpha \qquad (49)$$

where we have defined the functions

$$\int_{r'=r_1}^{r_2} r' I_1(\alpha_o r') dr' = \frac{1}{\alpha_o^2} \int_{\alpha_o r'=\alpha_o r_1}^{\alpha_o r_2} \alpha_o r' I_1(\alpha_o r') d\alpha_o r'$$

$$= \frac{1}{\alpha_o^2} \int_{x=\alpha_o r_1}^{\alpha_o r_2} x I_1(x) dx \equiv \frac{1}{\alpha_o^2} I(r_2, r_1) \tag{50}$$

and

$$\int_{r_1}^{r_2} r' K_1(\alpha_o r') dr' \equiv \frac{1}{\alpha_o^2} K(r_2, r_1) \tag{51}$$

where r_1 and r_2 are now taken as the coil inner and outer radii, and should not be confused with the outer radii of the first two regions. The vector potential for any region outside the coil is

$$A^{(n')}(r,z) = \frac{n_c I \mu_o}{\pi} \int_0^\infty \frac{\left[\sin\alpha(z-\ell_1) - \sin\alpha(z-\ell_2)\right]\left[U_{12}(n') I_1(\alpha_{n'} r) + U_{22}(n') K_1(\alpha_{n'} r)\right]}{\alpha\alpha_o^2 (U_{22}V_{11} - U_{12}V_{21})}$$

$$\times \left[V_{11} I(r_2, r_1) + V_{21} K(r_2, r_1)\right] d\alpha \ . \tag{52}$$

The region of the coil requires special treatment. To find the vector potential at a point in the coil region, r, we must add the solution of $A^{(k)}(r,z)$ for a coil going from r to r_2 to the solution of

$A^{(k')}(r,z)$ for a coil going from r_1 to r. The results are

$$A(c) = \frac{n_c I\mu_o}{\pi} \int_0^\infty \frac{\left[\sin \alpha(z-\ell_1) - \sin \alpha(z-\ell_2)\right]}{\alpha(U_{22}V_{11} - U_{12}V_{21})}$$

$$\times \left\{ \int_{r_1}^{r} \left[U_{12}I_1(\alpha_o r) + U_{22}K_1(\alpha_o r)\right]\left[V_{11}I_1(\alpha_o r') + V_{21}K_1(\alpha_o r')\right] r'dr' \right.$$

$$\left. + \int_{r}^{r_2} \left[V_{11}I_1(\alpha_o r) + V_{21}K_1(\alpha_o r)\right]\left[U_{12}I_1(\alpha_o r') + U_{22}K_1(\alpha_o r')\right] r'dr' \right\} d\alpha$$

$$= \frac{n_c I\mu_o}{\pi} \int_0^\infty \frac{\left[\sin \alpha(z-\ell_1) - \sin \alpha(z-\ell_2)\right]}{\alpha(U_{22}V_{11} - U_{12}V_{21})}$$

$$\times \left\{ \int_{r_1}^{r_2} U_{12}V_{11}I_1(\alpha_o r)I_1(\alpha_o r')r'dr' + \int_{r_1}^{r_2} U_{22}V_{21}K_1(\alpha_o r)K_1(\alpha_o r')r'dr' \right.$$

$$+ U_{12}V_{21}\left[I_1(\alpha_o r)\int_{r_1}^{r} K_1(\alpha_o r')r'dr' + K_1(\alpha_o r)\int_{r}^{r_2} I_1(\alpha_o r')r'dr'\right]$$

$$\left. + U_{22}V_{11}\left[\int_{r_1}^{r} K_1(\alpha_o r)I_1(\alpha_o r')r'dr' + \int_{r}^{r_2} I_1(\alpha_o r)K_1(\alpha_o r')r'dr'\right]\right\} d\alpha . \quad (53)$$

We shall use the definitions given in Eqs. (50) and (51) for $I(r_2,r_1)$ and $K(r_2,r_1)$, and we shall use the relations

$$\int_{r_1}^{r} K_1(\alpha_o r')r'dr' = \frac{1}{\alpha_o^2} K(r_2,r_1) - \int_{r}^{r_2} K_1(\alpha_o r')r'dr'$$

and

$$\int_{r}^{r_2} I_1(\alpha_o r)K_1(\alpha_o r')r'dr' = \frac{1}{\alpha_o^2} I(r_2,r_1) - \int_{r_1}^{r} I_1(\alpha_o r')r'dr' \ .$$

Equation (53) then becomes

$$A^{(c)}(r,z) = \frac{n_c I\mu_o}{\pi} \int_o^\infty \left\{ \frac{\left[\sin \alpha(z-\ell_1) - \sin \alpha(z-\ell_2)\right]}{\alpha\alpha_o^2(U_{22}V_{11} - U_{12}V_{21})} \right.$$

$$\times \left[U_{12}V_{11}I_1(\alpha_o r)\ I(r_2,r_1) + U_{22}V_{21}K_1(\alpha_o r)K(r_2,r_1)\right.$$

$$\left. + U_{12}V_{21}I_1(\alpha_o r)K(r_2,r_1) + U_{12}V_{21}K_1(\alpha_o r)I(r_2,r_1)\right]$$

$$+ \left[\frac{\left[\sin \alpha(z-\ell_1) - \sin \alpha(z-\ell_2)\right]}{\alpha} \left[\int_{r_1}^{r} K_1(\alpha_o r)I_1(\alpha_o r')r'dr' \right.\right.$$

$$\left.\left.\left. + \int_{r}^{r_2} I_1(\alpha_o r)K_1(\alpha_0 r')r'dr'\right]\right]\right\} d\alpha \ . \qquad (54)$$

We have shown in an earlier paper[3] that the integral of the expression in the large square brackets is

$$\frac{\pi}{2}\int_0^\infty \frac{1}{\alpha\alpha_o^2} J(r_2,r_1)\, J_1(\alpha r)\left[2 - e^{\alpha_o(z-\ell_2)} - e^{-\alpha_o(z-\ell_1)}\right] d\alpha \qquad (55)$$

where

$$\frac{1}{\alpha^2} J(r_2,r_1) \equiv \int_{r_1}^{r_2} rJ_1(\alpha r)dr \ . \qquad (56)$$

Making this substitution gives:

$$A^{(c)}(r,z) = \frac{n_c I\mu_o}{\pi}\int_0^\infty \left\{\frac{\left[\sin\alpha(z-\ell_1) - \sin\alpha(z-\ell_2)\right]\left[U_{12}V_{11}I_1(\alpha_o r)I(r_2,r_1)\right.}{\alpha\alpha_o^2(U_{22}V_{11} - U_{12}V_{21})}\right.$$

$$\left. + U_{22}V_{21}K_1(\alpha_o r)K(r_2,r_1) + U_{12}V_{21}\left(I_1(\alpha_o r)K(r_2,r_1) + K_1(\alpha_o r)I(r_2,r_1)\right)\right]$$

$$\left. + \frac{\pi}{2\alpha_o^2\alpha} J(r_2,r_1)J_1(\alpha r)\left[2 - e^{\alpha_o(z-\ell_2)} - e^{-\alpha_o(z-\ell_1)}\right]\right\} d\alpha \ . \qquad (57)$$

We have now determined the vector potential for any region. Once the vector potential has been determined, we can calculate any physically observable electromagnetic induction phenomenon from it. The particular parameters that we wish to calculate are the mutual impedance and the self-impedance of two identical bifilar coils. The mutual impedance between two coils, 1 and 2, is the voltage induced in one coil by a unit current in the other:

$$j\omega M_{12} = \frac{V_{(2)}}{I_{(1)}}$$

$$M_{12} = \frac{j\omega}{j\omega I(1)} \int A(1)\ ds_2 = \frac{n'}{I(1)} \int_{\ell_1'}^{\ell_2'} \int_{r_1'}^{r_2'} A(1)\ 2\pi r dr dz\ . \tag{58}$$

Since both coils are identical and occupy the same region, we can expand Eq. (57) and perform the integration over the second coil to obtain

$$M_{12} = \frac{2n^2\mu_o}{(\ell_2-\ell_1)^2(r_2-r_1)^2} \int_o^\infty \left\{ \frac{2\left[1 - \cos\alpha(\ell_2-\ell_1)\right]\left[U_{12}V_{11}I^2(r_2,r_1)\right.}{\alpha^2\alpha_o^4(U_{22}V_{11} - U_{12}V_{21})} \right.$$

$$\left. + U_{22}V_{21}K^2(r_2,r_1) + 2U_{12}V_{21}I(r_2,r_1)K(r_2,r_1)\right]$$

$$\left. + \frac{\pi}{\alpha_o^3\alpha^3} J^2(r_2,r_1)\left[\alpha_o(\ell_2-\ell_1) + e^{-\alpha_o(\ell_2-\ell_1)} - 1\right]\right\} d\alpha\ . \tag{59}$$

The coil impedance is

$$Z = \frac{V}{I} = j\omega M_{22}\ , \tag{60}$$

and since the coils are identical and in the same region, $M_{12} = M_{22}$. If we take the special case where there are no conductors outside the coil we have $\underset{\sim}{U} = \underset{\sim}{1}$, the unit matrix. Then $U_{22} = 1$ and $U_{12} = 0$ so that Eq. (59) becomes

$$M_{12} = \frac{2n_2\mu_o}{(\ell_2-\ell_1)^2(r_2-r_1)^2} \int_0^\infty \left\{ \frac{2}{\alpha^2\alpha_o^4}\left[1 - \cos\alpha(\ell_2-\ell_1)\right] \frac{V_{21}}{V_{11}} K^2(r_2,r_1) \right.$$

$$\left. + \frac{\pi}{\alpha_o^3\alpha^3} J^2(r_2,r_1)\left[\alpha_o(\ell_2-\ell_1) + e^{-\alpha_o(\ell_2-\ell_1)} - 1\right] \right\} d\alpha \ . \qquad (61)$$

A computer program, ENCMUL, to evaluate the integral part of this expression will be given in a later report. Or, if we have no conductors inside the coil, we have $\underset{\sim}{V} = \underset{\sim}{1}$, and Eq. (59) becomes

$$M_{12} = \frac{2n^2\mu_o}{(\ell_2-\ell_1)^2(r_2-r_1)^2} \int_0^\infty \left\{ \frac{2}{\alpha^2\alpha_o^4}\left[1 - \cos\alpha(\ell_2-\ell_1)\right] \frac{U_{12}}{U_{22}} I^2(r_2,r_1) \right.$$

$$\left. + \frac{\pi}{\alpha_o^3\alpha^3} J^2(r_2,r_1)\left[\alpha_o(\ell_2-\ell_1) + e^{-\alpha_o(\ell_2-\ell_1)} - 1\right] \right\} d\alpha \ . \qquad (62)$$

A computer program, INNMUL, to evaluate the integral part of this expression is in the appendix.

Thus, by use of these programs we can calculate the mutual inductance and coil impedance of coils in a liquid level probe, consisting of multiple conductors inside or outside the coils. We shall now consider the effects of the external electrical circuit.

The equivalent circuit of a liquid level probe is shown in Fig. 4.

ORNL-DWG 72-671B

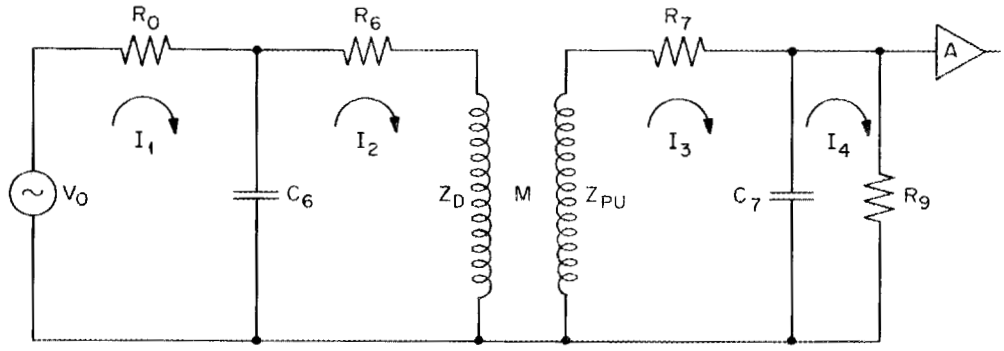

V_0 DRIVING VOLTAGE
R_0 SERIES RESISTANCE IN THE DRIVING CIRCUIT
C_6 SHUNT CAPACITANCE OF THE DRIVING CIRCUIT
R_6 D.C. RESISTANCE OF THE DRIVER COIL
Z_D IMPEDANCE OF THE DRIVER COIL
M MUTUAL IMPEDANCE BETWEEN THE DRIVER AND PICK-UP COIL
Z_{PU} IMPEDANCE OF THE PICK-UP COIL
R_7 D.C. RESISTANCE OF THE PICK-UP COIL
C_7 SHUNT CAPACITANCE OF THE PICK-UP CIRCUIT
R_9 AMPLIFIER INPUT IMPEDANCE
I LOOP CURRENT

Fig. 4. Simplified Circuit Diagram for an Eddy Current Liquid Level Probe.

We can write the following set of equations for the voltage drops around each of the loops in the circuit:

$$I_1\left(R_0 - \frac{j}{\omega C_6}\right) - I_2\left(-\frac{j}{\omega C_6}\right) = V_0 \tag{63}$$

$$-I_1\left(-\frac{j}{\omega C_6}\right) + I_2\left(-\frac{j}{\omega C_6} + R_6 + Z_D\right) - I_3\left(j\omega M\right) = 0 \tag{64}$$

$$-I_2\left(j\omega M\right) + I_3\left(Z_{PU} + R_7 - \frac{j}{\omega C_7}\right) - I_4\left(-\frac{j}{\omega C_7}\right) = 0 \tag{65}$$

$$-I_3\left(-\frac{j}{\omega C_7}\right) + I_4\left(-\frac{j}{\omega C_7} + R_9\right) = 0 . \tag{66}$$

We can use determinants and solve for the current in the final loop, I_4, produced by an applied voltage V_0:

$$I_4 = \frac{\begin{vmatrix} R_o - \frac{j}{\omega C_6} & \frac{j}{\omega C_6} & 0 & V_0 \\ \frac{j}{\omega C_6} & \frac{-j}{\omega C_6} + R_6 + Z_D & -j\omega M & 0 \\ 0 & -j\omega M & Z_{pu} + R_7 - \frac{j}{\omega C_7} & 0 \\ 0 & 0 & \frac{j}{\omega C_7} & 0 \end{vmatrix}}{\begin{vmatrix} R_o - \frac{j}{\omega C_6} & \frac{j}{\omega C_6} & 0 & 0 \\ \frac{j}{\omega C_6} & \frac{-j}{\omega C_6} + R_6 + Z_D & -j\omega M & 0 \\ 0 & -j\omega M & Z_{pu} + R_7 - \frac{j}{\omega C_7} & \frac{j}{\omega C_7} \\ 0 & 0 & \frac{j}{\omega C_7} & \frac{-j}{\omega C_7} + R_9 \end{vmatrix}} . \qquad (67)$$

We shall solve for the current, I_4, multiply it by the resistance R_9 to determine the input voltage to the amplifier, and then multiply by the amplifier gain G to determine the output voltage:

$$V_{out} = -j \frac{MV_0R_9G}{\omega C_6C_7} \div \left\{ \left[\left(R_o - \frac{j}{\omega C_6} \right) \omega^2 M^2 \left(R_9 - \frac{j}{\omega C_7} \right) \right. \right.$$

$$\left. + \left[\left(R_o - \frac{j}{\omega C_6} \right) \left(Z_D + R_6 - \frac{j}{\omega C_6} \right) + \frac{1}{\omega^2 C_6{}^2} \right] \left[\left(R_9 - \frac{j}{\omega C_7} \right) \left(Z_{PU} + R_7 - \frac{j}{\omega C_7} \right) + \frac{1}{\omega^2 C_7{}^2} \right] \right\} . \qquad (68)$$

Rearranging terms so that Eq. (68) clearly remains finite when the capacitance goes to zero, we find that

$$V_{out} = -j\omega M V_0 R_9 G \div \Big\{ (\omega C_6 R_o - j)(\omega C_7 R_9 - j)\omega^2 M^2$$

$$+ \Big[(\omega C_6 R_o - j)(Z_D + R_6) - jR_o \Big] \Big[(\omega C_7 R_9 - j)(Z_{PU} + R_7) - jR_9 \Big] \Big\} . \qquad (69)$$

From Eq. (69) we can calculate the phase shift between the voltage driving the eddy-current probe and the amplified voltage received by the phase shift detector. Since the driver coil and pickup coil are in the same region and are identical, we have

$$j\omega M = Z_D = Z_{PU} , \qquad (70)$$

where M will be given by either Eq. (61) or Eq. (62). To evaluate Eq. (69), there is a computer program, ATTEN, which calculates the magnitude and phase of the output voltage for various values of the terms in Eq. (69).

The circuit parameters, R_o, C_6, R_9, and C_7 are values that may be varied (within certain limits) with an external plug-in attenuator. The attenuator, when properly chosen, has the following effects:

(1) The phase shift due to temperature drifts causing variations in the dc resistance values of R_6 and R_7 can be essentially eliminated.

(2) The L-C network in the driving and pickup circuits in Fig. 4 and the mutual coupling between the circuits combine to act as a band-pass filter that reduces the noise in the instrumentation.

(3) A reduction in sensitivity occurs and the phase shifts due to variations in the other parameters increase. However, these effects can be made negligible if the attenuator is properly designed.

The attenuator design will be considered in greater detail in the next chapter.

3. COMPUTER CALCULATIONS FOR A PROBE INSIDE BISMUTH

The type of liquid level probe analyzed in this report is shown in Fig. 5. It consists of a long bifilar coil inside a molybdenum container. The drawing is symmetric about the coil axis, so only half of the probe is shown (in cross section). The probe is placed inside a molybdenum cavity, and the level of the molten bismuth in the cavity can be measured. A current flowing in the driving coil produces an electromagnetic field that is modified by the presence of the conductors. The pickup coil detects this field. In the design of this probe, we used the following procedure. We first maximized the sensitivity of the probe to changes in liquid level, then minimized the effects of the undesirable variables such as temperature drift, and finally maximized the sensitivity to error ratio.

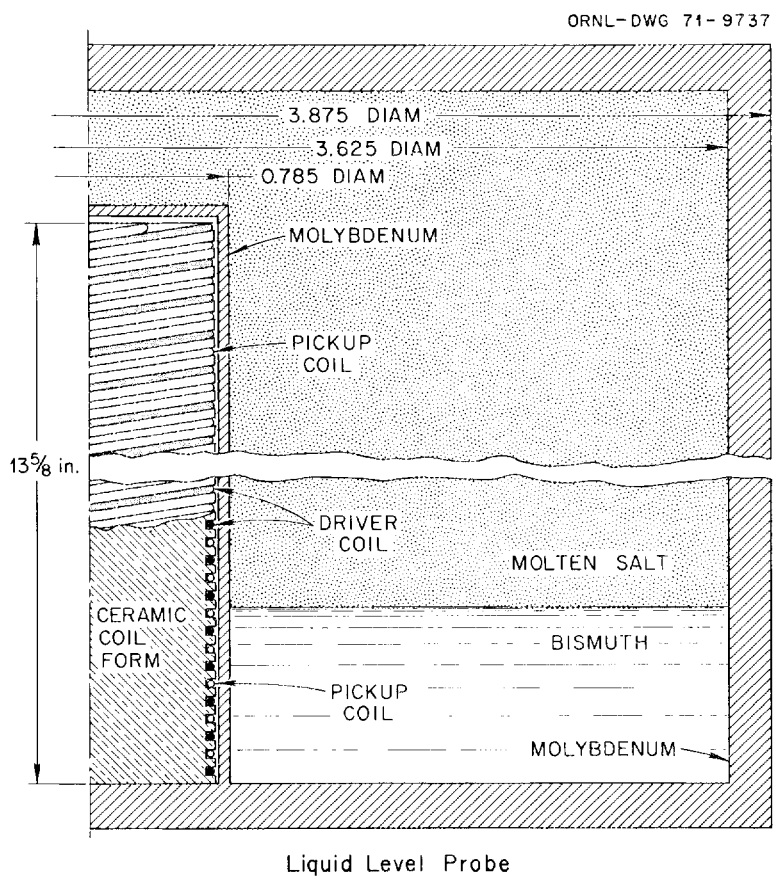

Fig. 5. Liquid Level Probe Inside Conductors.

We first calculated the magnitude and phase of the voltage out of the pickup coil for a current flowing in the driver coil. The driving impedance and pickup amplifier impedances are both taken to be infinite. In Fig. 6, we show how the magnitude and phase of the voltage, with and without bismuth, vary as functions of the wall thickness of the molybdenum container. The bismuth region is taken to be infinite, since the outer container has a very small effect, and was not considered in the preliminary calculations. Also, the molten salt is equivalent to air as far as resistivity is concerned. As the wall thickness is increased, we see that the phases with and without bismuth cross, indicating that

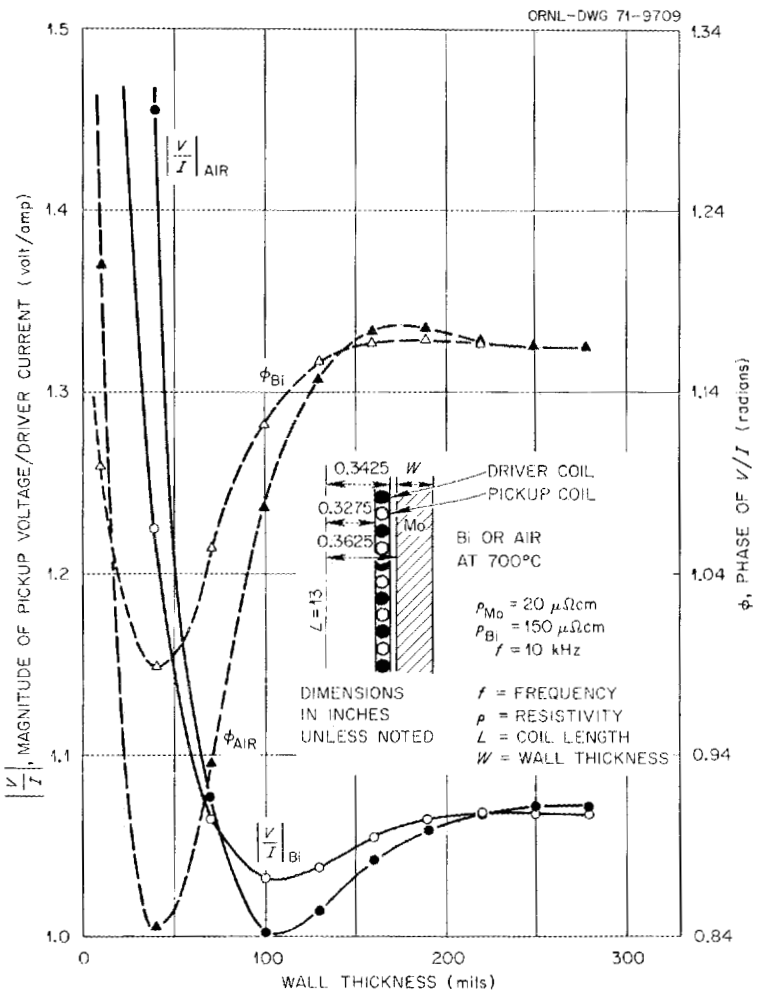

Fig. 6. Magnitude and Phase of the Voltage in the Pickup Coil as a Function of the Wall Thickness of the Molybdenum Container, With and Without Bismuth, at 10 kHz.

with a wall thickness of approximately 15 mils, there is no change in phase as the liquid level is varied. As the wall thickness is increased further, the curves of phase with and without bismuth become quite far apart indicating that there will be a large phase shift as the liquid level is varied. The phase difference approaches a maximum at approximately 47 mils and then decreases again to zero as the curves cross at 142 mils, approach another maximum separation, and then cross again. The behavior of the magnitude curves of the voltage is very similar, with the curves crossing and approaching a maximum and then crossing again. The first maximum, which is not shown in Fig. 6, is the largest and occurs at zero wall thickness for both the magnitude change and the phase shift. Since this is impractical in our design, we elected to concentrate on the second maximum. The value of wall thickness at which this maximum occurs is also a function of frequency. In Fig. 7, we have a very similar plot of magnitude and phase of the pickup coil voltage as functions of the container wall thickness, with and without bismuth, at a frequency of 20 kHz. Figure 6, which was run at 10 kHz, is very similar to Fig. 7, except the values of wall thickness for maximum magnitude and phase change are smaller at the higher frequency. At 20 kHz the wall thicknesses for maximum phase and magnitude change occur at 27 mils and 80 mils, respectively, compared to 47 mils and 110 mils, respectively, at 10 kHz.

In general, we are able to plot optimum wall thickness for maximum sensitivity against frequency, as shown in Fig. 8. In Fig. 8 we have optimized the wall thickness for the maximum phase shift, and the amount of phase shift we get at optimum is also plotted against the frequency. Because the curves are rounded, it is difficult to exactly determine the optimum wall thickness for a given frequency. The shape of the curves varies with coil size, so we made similar plots for optimum wall thickness for maximum sensitivity to both magnitude and phase changes vs frequency using different size coils. A composite of these plots for phase shift is shown in Fig. 9. From Fig. 9, we concluded that a liquid level probe with a wall thickness of 30 mils would have adequate sensitivity. Once the wall thickness has been fixed, then we

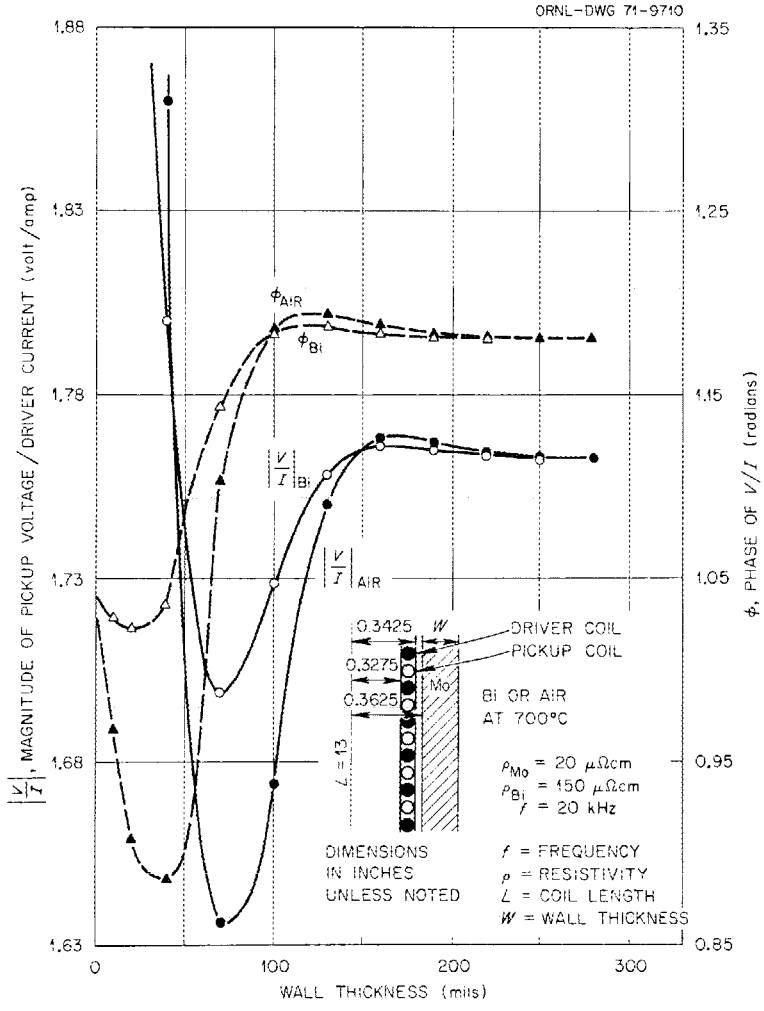

Fig. 7. Magnitude and Phase of the Voltage in the Pickup Coil as a Function of Wall Thickness of the Molybdenum Container With and Without Bismuth at 20 kHz.

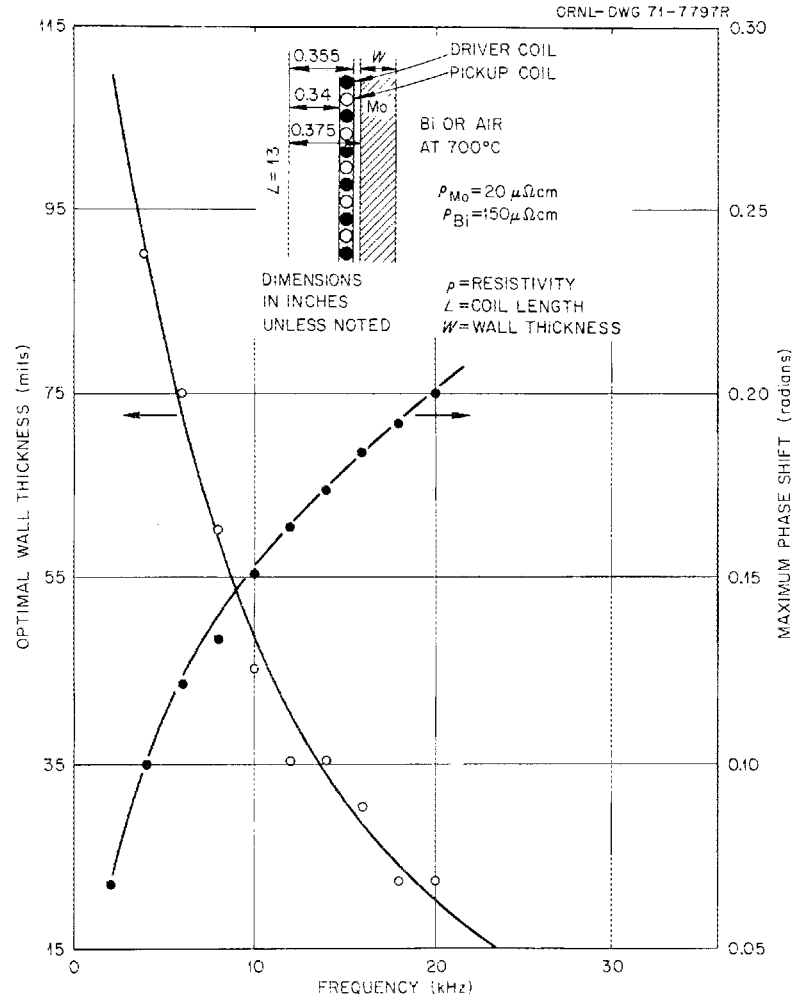

Fig. 8. Optimum Wall Thickness for Maximum Phase Shift and Phase Shift at Optimum vs Frequency.

ORNL DWG 73-2002

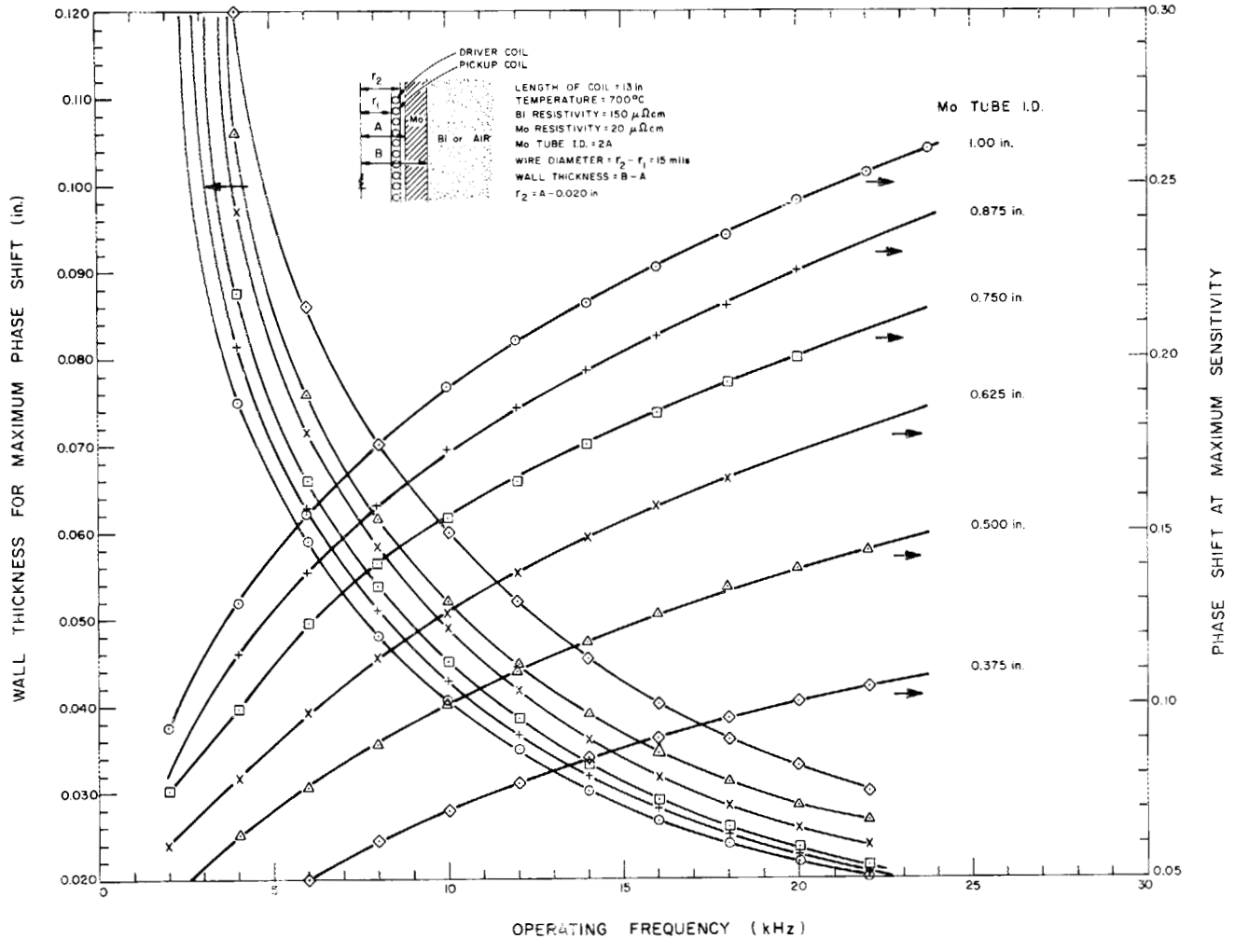

Fig. 9. Optimum Wall Thickness for Maximum Phase Shift and Phase Shift at Optimum Plotted Against Frequency for Various Coil Sizes.

can determine the optimum frequency for maximum sensitivity and the sensitivity at that frequency for any size coil. In Fig. 10, we have optimized for maximum phase shift, and we have made similar plots for maximum amplitude change. From this plot we decided that we would have adequate sensitivity if the coil form OD was 0.725 in. With this size coil operated at a frequency of 16 kHz, we have 0.18 radians or approximately 10° phase shift as the liquid level is varied from full to empty. While this is not the most sensitive configuration, the sensitivity is much more than adequate, and the compromises made thus far insure a good inexpensive mechanical design. We shall now turn our attention to minimizing the drifts.

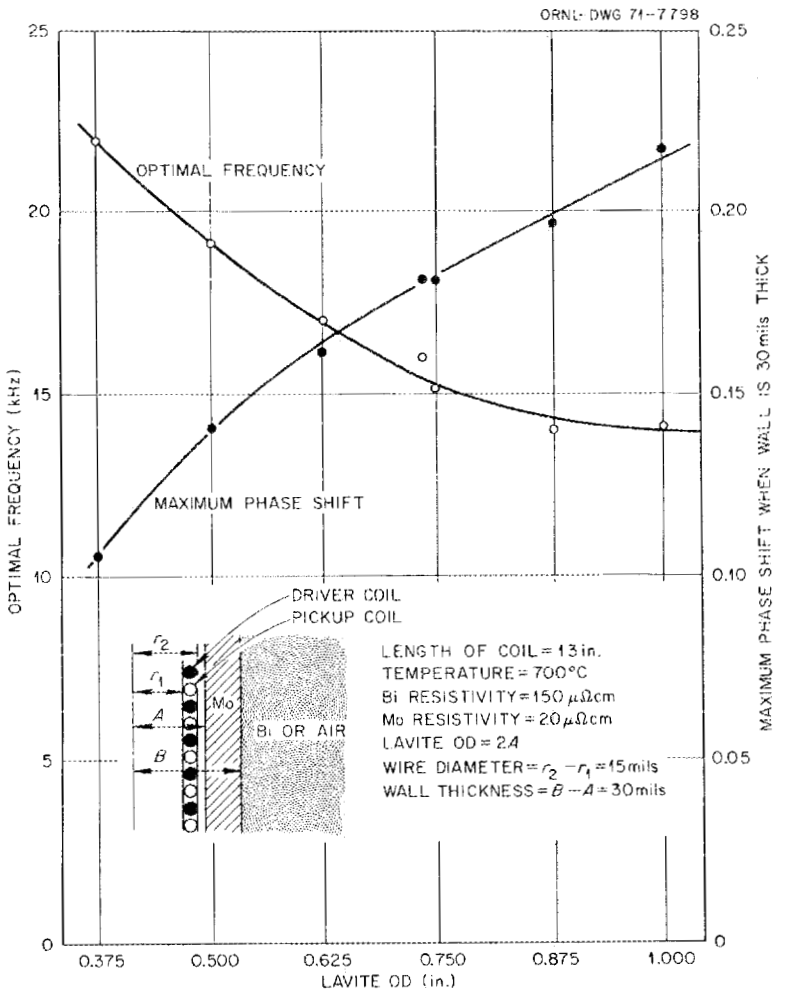

Fig. 10. Optimum Frequency for Maximum Phase Shift and Phase Shift at Maximum Plotted Against Coil Form OD.

In the calculations to minimize drifts, we included the outer molybdenum container as shown in Fig. 5. We assumed that both the coil sheath and the outer container were infinitely long; the coil was actually 13.625 in. long.

The major contribution to drifts is the wide range of operating temperature of the probe. The temperature contributions can be broken down into the following:

(1) There is a change in the ac field due to changes in the resistivity of the molybdenum and bismuth. This causes a change in the self-impedance of both the driver and pickup coils and the mutual coupling between them.

(2) There is a change in the dc resistance of both coils.

(3) Thermal expansion of the coil and conductors also causes a change in the impedances and mutual coupling.

We shall consider each of these factors separately.

In Fig. 11 we have plotted the phase of the voltage of the pickup coil against frequency for various temperatures. We can see that these curves intersect at a certain frequency, which means that the temperature coefficient of the phase is essentially zero at that frequency. These zero temperature coefficient points occur at approximately 25 kHz for the case in which the liquid level probe is empty and at about 30 kHz for the probe being full of bismuth. More exact calculations with an external circuit attached to the probe for an operating frequency of 24.000 kHz are shown in the table below.

Table 1. Calculated Phase Shift Values (in Degrees) with Bismuth and Air at Several Temperatures

Material	Temperature (°C)			
	550	600	650	700
Bismuth	41.35	41.39	41.45	41.58
Air	30.75	30.58	30.52	30.53

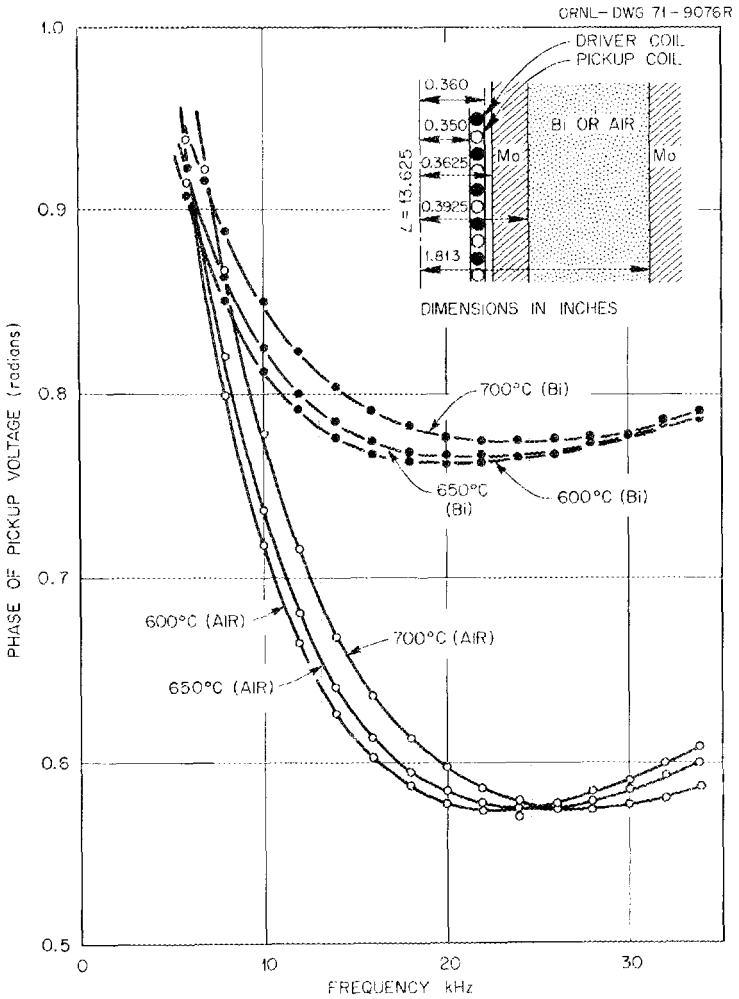

Fig. 11. Phase of the Pickup Coil Voltage Plotted Against Frequency for Different Temperatures.

In the temperature range of particular interest, 600° to 650°C, we have chosen our parameters so that we have exactly the same positive slope of phase with temperature (+0.06°/50°C) in bismuth as the negative slope (-0.06°/50°C) in air. These two end points represent the worst temperature coefficient, and it is expected to decrease to zero for the case of the probe being half full. This worst case of the calculated temperature coefficient is equivalent to ±0.0015 in./°C error in the liquid level measurement.

Similar calculations were made for the magnitude of the pickup coil voltage, but there is no frequency at which the magnitude remains constant with temperature changes.

We next considered the variation in phase due to changes in dc resistance of the coil. As we discussed earlier, a value of capacitance and resistance in the driving and detecting circuits can be chosen that will give essentially no change in phase as the dc resistance of the coil is varied, and will also act as a filter to reduce the system noise. However, when the R-C network is adjusted to give exactly zero temperature drift with the bismuth present, it will not give exactly zero drift with the bismuth absent. Therefore, the network is adjusted to give small drifts of opposite signs in the two cases. But the more we filter to reduce system noise, the greater these small drifts become. In addition, the phase shifts due to variations in the capacitance and resistance values in the circuit increase as we reduce the system noise. Therefore, we must compromise between the system noise and drifts. The following table summarizes the drifts between 600° and 650°C, using 36.3 Ω for the series resistance of the driver circuit and the shunt resistance of the pickup circuit and 3830 pF for the shunt capacitance.

Table 2. Summary of Phase Shifts Due to Variations in Various Circuit Parameters

Parameter Varied	Variation in Parameter (%)	Phase Shift (degrees)
Driver Coil Resistance	10	0.002
Pickup Coil Resistance	10	0.002
Driver Shunt Capacitance	1	0.008
Pickup Shunt Capacitance	1	0.008
Driver Circuit Series Resistance	1	0.004
Pickup Circuit Shunt Resistance	1	0.004
Operating Frequency	0.1	0.001

The phase shifts given in Table 2 are the absolute maximum values that occur anywhere in the temperature range with or without bismuth.

The final contribution to dirfts that we considered was thermal expansion of the system. Including thermal expansion effects, a temperature variation from 600° to 650°C caused a 0.05° difference in the phase change between the two temperatures, which can be compensated for with a small frequency change.

Additional information on the design of this probe is given in other reports.[4]

4. MEASUREMENTS ON LIQUID LEVEL SYSTEM

Three different sets of measurements have been performed on the liquid level probe. The first set of measurements was performed at a frequency of 10 kHz and at room temperature. The primary purpose of these measurements was to test the linearity of the probe, and the second purpose was to check the accuracy of the calculations. The probe consisted of the coil enclosed in a molybdenum sheath, but without any outer molybdenum container. The bismuth was replaced by 12 rings of Inconel, each machined to 1 ± 0.010 in. thick. The phase shift was recorded to within 0.01° as the rings were added, simulating an increasing liquid level. A least-squares fit was made of the phase shift vs thickness, and the maximum deviation of any reading from a straight line was 0.009° or 0.011 in. The measured slope of the line was 0.599°/in. compared to the calculated slope of 0.531°/in. Therefore, we concluded that the probe was extremely linear over at least the first 12 in. of level.

For the next set of measurements, a prototype liquid level probe was constructed by personnel of the Chemical Technology Division, and joint experiments were performed with them. The prototype was essentially identical to the one shown in Fig. 5, except that the outer container was made of carbon steel. The carbon steel outer container has no effect when the probe is covered with bismuth, but decreases the phase reading by approximately 1/2 a degree when the probe is empty.

---

[4] L. E. McNeese *et al.*, Engineering Development Studies for Molten-Salt Breeder Reactor Processing No. 12, ORNL-TM-3775 (in preparation).

The measurements were made at a frequency of 27.7 kHz for various levels of bismuth and at various temperatures between 550°C and 700°C. The results are plotted in Fig. 12. The phase shift is a linear function of liquid level over a range from zero to about 13 in. The slope of the curve varies slightly with temperature, with the minimum temperature coefficient occurring between 600°C and 650°C.

The temperature coefficient of the level reading was 0.009 in./°C for the chamber empty and 0.0024 in./°C for the chamber full of bismuth. The higher temperature coefficient with the chamber empty was probably due to the ferromagnetic outer casing.

A series of more accurate calculations, considering more different parameters, showed that more accurate measurements could be made at 24 kHz for the temperature range of 600°C to 650°C. The level in the probe

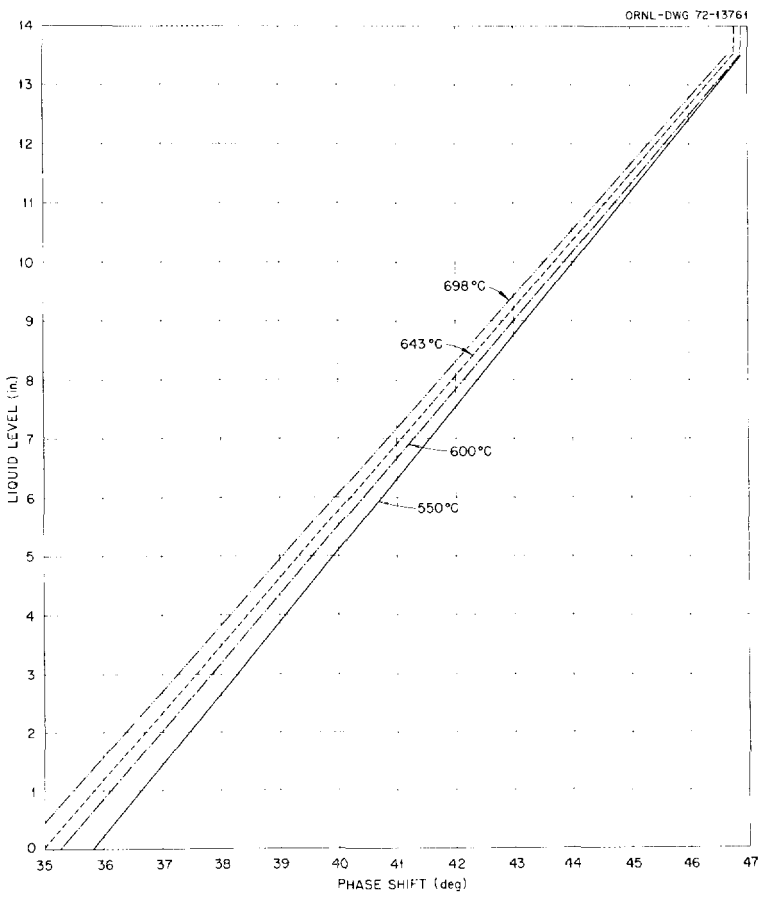

Fig. 12. Phase Shift Plotted Against Liquid Level for Various Temperatures Measured at a Frequency of 27.7 kHz.

was set at the maximum, determined by the amount of bismuth in the system at the time. The manometer reading indicated 10 in., but later measurements indicate that the actual level was about 13.5 in. Table 3 shows both calculated and measured values of magnitude and phase. The actual calculations were made with the probe either full or empty of bismuth, and the 10-in. calculations represent a linear interpolation between zero and 13.625 in. of bismuth.

The resistor values are those of both the driver series and the pickup shunt resistances, and these can be varied to achieve a "fine tuning" in the temperature coefficient of the probe. The phase difference is the phase at the lower temperature subtracted from the phase at the upper temperature. In the ideal case, the phase shifts between 600°C and 650°C would be equal but opposite in sign with the probe full and empty, as shown for the calculated values using 36.3 Ω. However, the measured phase difference was +0.12 rather than +0.06 calculated for the 10-in. level. By increasing the values of the resistors in the attenuator, we are able to decrease both the calculated and measured phase differences. The best value of resistors to give minimum drift would probably be slightly larger than 36.3 Ω. The level was also varied using the 75-Ω resistors in the attenuator. The temperature coefficient of the phase varied from +0.0028°/°C (+0.0032 in./°C) with the chamber empty to 0.00°/°C with the chamber full. By decreasing the value of the resistors, it should be possible to obtain a temperature coefficient of +0.0016 in./°C with the chamber empty, -0.0016 in./°C with the chamber full and zero with the chamber half full.

The calculated slope at 600°C was 0.843°/in. compared to a measured value of 0.866°/in. Part of this error may be due to the fact that the magnetic permeability of the outer container is only approximately known.

With the information gained in these measurements, we will be able to calibrate the probe used in the loop with an outer container of molybdenum, as shown in Fig. 5. The lower calibration point for the probe can be obtained before bismuth is ever added to the system. To get the upper calibration point, the bismuth level must be raised over the top of the probe, and the phase reading recorded. If 0.40° is subtracted

Table 3. Calculated and Measured Values of Magnitude and Phase with Different Temperatures and Different Attenuator Values

Temp. (°C)	Resistance	36.3 Ω				75 Ω				121 Ω			
		Bi	Air	10 in. Calculated	10 in. Measured	Bi	Air	10 in. Calculated	10 in. Measured	Bi	Air	10 in. Calculated	10 in. Measured
550	Magnitude	1.36	1.53			1.45	1.64		1.45	1.32	1.49		
	Phase	41.36	30.76		45.88	40.88	30.25		45.74	40.57	29.92		45.55
	Phase Difference	+0.03	-0.17	+0.01	+0.16	-0.01	-0.22	-0.03	+0.04	-0.04	-0.24	-0.06	0
600	Magnitude	1.32	1.51			1.43	1.64		1.45	1.32	1.51		
	Phase	41.39	30.59		46.04	40.87	30.03		45.78	40.53	29.68		45.55
	Phase Difference	+0.07	-0.07	+0.06	+0.12	+0.02	-0.10	+0.02	+0.03	-0.01	-0.14	-0.01	-0.06
650	Magnitude	1.27	1.47			1.40	1.63		1.41	1.31	1.52		
	Phase	41.46	30.52		46.16	40.89	29.93		45.81	40.52	29.54		45.49
	Phase Difference	+0.13	+0.02	+0.14	+0.03	+0.09	-0.02	+0.09	-0.07	+0.06	-0.05	+0.06	-0.13
700	Magnitude	1.23	1.44			1.38	1.63		1.38	1.30	1.54		
	Phase	41.59	30.54		46.19	40.98	29.91		45.74	40.58	29.49		45.36

Magnitude = volts rms x 10^{-2}; Phase = degrees; Phase Difference = upper temperature--lower temperature.

from this phase reading, this gives the value of the phase when the liquid level is 13 in. The phase will be a linear function of the bismuth level between 0 in. and 13 in. During the nine months of testing of the probe, the zero point appeared to move, but the slope was essentially constant (within 1.4%). Therefore, by assuming a constant slope, it is possible to recalibrate the probe by raising the bismuth level over the probe. There was a considerable amount of corrosion in the loop which probably accounted for the shift in the zero level point.

A passive RLC phase calibrator was constructed to eliminate instrument variations. It gives two measurements of the instrument gain (slope) and two independent measurements of the zero point. The long-term stability of the calibrator is approximately 0.01°.

Additional information on the linearity tests,[5] the initial measurements[6] in the test loop, and the final measurements[7] in the test loop are given in other reports.

5. SUMMARY AND CONCLUSIONS

The problem for a coil either encircling or enclosed by an arbitrary number of conductors has been solved. Accurate and versatile computer programs have been written which numerically evaluate these solutions. Good agreement has been obtained between the calculations and experiments. These programs have been applied to design very accurate liquid level probes even though we are looking through a good conductor (molybdenum) and measuring the level of a poor conductor (bismuth).

---

[5] L. E. McNeese *et al.*, Engineering Development Studies for Molten-Salt Breeder Reactor Processing No. 13, ORNL-TM-3776 (in preparation).

[6] L. E. McNeese *et al.*, Engineering Development Studies for Molten-Salt Breeder Reactor Processing No. 14, ORNL-TM-4018 (in preparation).

[7] L. E. McNeese *et al.*, Engineering Development Studies for Molten-Salt Breeder Reactor Processing No. 16, ORNL-TM-4020 (in preparation).

6. ACKNOWLEDGMENTS

The authors wish to acknowledge the assistance of C. C. Lu in the preliminary programming, the assistance of H. O. Weeren, L. D. Chitwood, and O. E. Conner in performing the measurements, W. E. Deeds and L. E. McNeese for editing the report, Janice Shannon for preparing the final manuscript and Jerry Roth and L. E. McNeese for providing overall guidance.

APPENDIX A

APPENDIX A

Computer Programs for a Liquid Level Probe Inside Coaxial Conductors

I. INTRODUCTION

This computer program is used to calculate the normalized coil impedance of both the driver and pickup coils of an eddy-current probe, surrounded by multiple coaxial cylindrical conductors. The programming consists of a fundamental subroutine named INNMUL, which is called into execution by a main DRIVER program. INNMUL branches to eight other new subroutines during execution. INNMUL itself is adapted from an earlier program in the BASIC language.

The FORTRAN-IV computer language is used, with REAL*8 arithmetic, on the IBM/360 computers. New work was done to carry out the needed calculations with sufficient accuracy in the case of a "thin" region among the conducting media. In connection with this, some special subroutines were also developed for the calculation of the necessary modified Bessel functions, with accuracy of at least 15 significant decimal digits for real arguments, and 10 significant digits for complex arguments.

An outline of the program follows, with discussion and program listing of each separate routine. The eight subroutines required by INNMUL are named XIINT, XJJNT, GAMCAL, GCALC, MODBES, CMDBES, COMKB, and CMI. They are needed for integrations of $xJ_1(x)$ and $xI_1(x)$, for calculation of the gamma factor, and for the modified Bessel functions.

Last an interactive program will be given for generation of the data block file, which must be submitted with the program for execution on the IBM/360 computer. This program, named TELINC, is stored on the PDP-10 disk, and may be used from the teletype to prepare the data in the necessary format for the DRIVER. The data could, of course, be set up for execution of the program by any other convenient method.

II. DESCRIPTION OF INNMUL

A. DRIVER Program

The DRIVER main program reads the data for the cases to be executed by the INNMUL subroutine. After receiving the data and making preliminary calculations if necessary, the DRIVER then branches to INNMUL. After the calculation of normalized coil impedance is completed by INNMUL and its other subroutines, then the DRIVER program prepares a summary printout, showing data and results.

Data must be given to the DRIVER program for the coil dimensions, for the air normalization factor, and for information about each conductor outside the coil. The inner radius, the relative permeability, μ_{REL}, and the value of the quantity $\omega\mu\sigma\bar{r}_m^2$ are needed for each conductor.

The DRIVER program is written to receive the quantity, $\omega\mu\sigma\bar{r}_m^2$, in any one of three different ways. First, the value of the quantity may be given directly for each conductor. Second, the factor σ may be given for each conductor. In that case, the permeability, μ, is $4\pi \times 10^{-7} \times \mu_{REL}$. Then the operating frequency also is given in order to obtain ω for the coil, and $\bar{r}_m$, in meters, is either given or calculated for the coil.

Third, the resistivity, ρ ($\mu\Omega$-cm) may be given as data for each conductor. The relation between ρ and σ is given by: $\sigma = 10^8/\rho$. Then the quantity $\omega\mu\sigma\bar{r}_m^2$ is calculated as $0.5093979 \times \text{freq.} \times \bar{r}^2 \times \mu_{REL}/\rho$. The constant is a product of conversion factors $= (2\pi)(0.0254)(4\pi \times 10)(10)$. Therefore in this third case, the known data must include the driving frequency (Hertz), and $\bar{r}$ (in.), as well as relative permeability. The details of setting up the data for submission with the computer program will be given in the last section.

Following is a list of the program DRIVER.

```
C         PRØGRAM TØ RUN CASES ØN SUBRØUTINE INNMUL
C
      IMPLICIT REAL*8 (A-H,Ø-Z)
      REAL*8 L,MU,L1
      DIMENSIØN RHØ(10)
      DATA PI/3.1415 92653 58979 D0/,CØNST1/0.0254D0/
      DATA MU/4.0D-7/
      CØMMØN/REGIØN/R(10),EM(10),PERM(10),KLIM
C
C         FIRST DATA IS READ FØR THE CØIL AND ITS DIMENSIØNS
C         IAIR=0 IF AIR VALUE NØRMALIZATIØN FACTØR IS NØT GIVEN DATA
C         IAIR.LT.0 FØR THE END ØF ANY ADDITIØNAL CØILS - END ØF RUN DATA
C         NØRMAL=1 MEANS THE CØIL DIMENSIØNS ARE NØRMALIZED AS GIVEN DATA
C         A9=AIR VALUE FACTØR FØR NØRMALIZATIØN ØF CØIL IMPEDANCE
C
      MU=MU*PI
      PRINT 1
 1    FØRMAT(' SAVS')
      NCØIL=0
 100  READ 6,IAIR,NØRMAL
      IF(IAIR.LT.0)GØ TØ 190
      NCASE=0
      IF(IAIR.GT.0)READ 3,A9
      NCØIL=NCØIL+1
      PRINT 2,NCØIL
 2    FØRMAT(/6X,'SUMMARY ØUTPUT FØR CØIL NØ.',I3)
      READ 3,R1,R2,L,L1
 3    FØRMAT(5D15.8)
C
C         R1=INNER CØIL RADIUS (INCHES ØR NØRMALIZED)
C         R2=ØUTER CØIL RADIUS (INCHES ØR NØRMALIZED)
C         L=LENGTH ØF CØIL (INCHES ØR NØRMALIZED)
C         L1=DISTANCE FRØM BØTTØM ØF CØIL TØ Z=0 PLANE (INCHES ØR NØRM.)
C         IF L1 IS NØT 0,  THEN L IS DISTANCE FRØM TØP ØF CØIL TØ Z=0
C
      L=L-L1
      IF(NØRMAL.NE.0)GØ TØ 105
C
C         NØRMALIZATIØN ØF CØIL AND CØNDUCTØRS IS BY MEAN CØIL RADIUS
C
      RBAR=(R1+R2)*0.5D0
      R1=R1/RBAR
      R2=R2/RBAR
      L=L/RBAR
 105  IF(IAIR.EQ.0)CALL INNMUL(R1,R2,L,A9,IAIR,ZRE,ZIM)
      PRINT 4,R1,R2,L,A9
 4    FØRMAT(6X,'INNER CØIL RADIUS (R1) =',F15.9/
     1 6X,'ØUTER CØIL RADIUS (R2) =',F15.9/
     2  13X,'CØIL LENGTH (L) =',F15.9
     3 /14X,'AIR VALUE (A9) =',F15.9)
C
C         NEXT SET ØF DATA GIVES INFØRMATIØN ABØUT THE CØNDUCTØRS
C         N=NUMBER ØF CØNDUCTØRS
C         N.LT.0 MEANS END ØF ANY ADDITIØNAL CASES WITH GIVEN CØIL DATA
C         IHAVEM=1 MEANS DATA IS GIVEN FØR EM=ØMEGA*MU*SIGMA*RBARSQ
C         IHAVEM=0 MEANS EM MUST BE CALCULATED BY THIS FØRMULA
C         IHAVEM=-1 MEANS EM MUST BE CALCULATED FRØM RESISTIVITY
C
```

```
 110  READ 6,N,IHAVEM
      IF(N.LE.0)GØ TØ 100
      NCASE=NCASE+1
      PRINT 5,NCASE,NCØIL
 5    FØRMAT(/6X,'CASE NØ.',I3,' ØF CØIL NØ.',I3/)
 6    FØRMAT(4I5)
      KLIM=N+1
      PRINT 7,N
 7    FØRMAT( I13,' CØNDUCTØRS ØUTSIDE CØIL'/5X,'INNER RADIUS'
     1 ,10X,'M',8X,'PERMEABILITY',3X,'RESISTIVITY')
      IF(IHAVEM.GT.0)GØ TØ 130
C
C        EM(I) IS THIS VALUE FØR EACH CØNDUCTØR I=1,N
C        R(I) IS THE INNER RADIUS ØF EACH CØNDUCTØR (INCHES ØR NØRM.)
C        PERM(I) IS RELATIVE PERMEABILITY ØF EACH CØNDUCTØR
C        FREQ IS FREQUENCY ØF THE DRIVING CURRENT (KHZ)
C        ØMEGA IS ANGULAR FREQUENCY ØF THE DRIVING CURRENT,=2PI*FREQ*E3
C        MEAN CØIL RADIUS RBAR GIVEN WITH DATA IF IHAVEM=0,NØRMAL.NE.0
C        MU IS PERMEABILITY GIVEN FØR EACH CØNDUCTØR IF IHAVEM=0
C        SIGMA IS CØNDUCTIVITY GIVEN FØR EACH CØNDUCTØR IF IHAVEM=0
C
      READ 3,FREQ
      IF(NØRMAL.NE.0) READ 3,RBAR
      IF(IHAVEM.LT.0)GØ TØ 120
      ØMEGA=2.0D3*PI*FREQ
      CØNST=(RBAR*CØNST1)**2
      DØ 115 I=1,N
      READ 3,R(I),SIGMA,PERM(I)
 115  EM(I)=ØMEGA*MU*SIGMA*CØNST*PERM(I)
      GØ TØ 140
C
C        NUMBER 0.5093979D3 IS A PRØDUCT ØF CØNVERSIØN FACTØRS,
C        (2*PI*D3)*(4*PI*D-7)*(D8)*(.0254**2)
C
 120  CØNST=0.5093979D3*RBAR*RBAR*FREQ
      DØ 125 I=1,N
      READ 3,R(I),RHØ(I),PERM(I)
 125  EM(I)=CØNST*PERM(I)/RHØ(I)
      GØ TØ 140
 130  DØ 135 I=1,N
 135  READ 3,R(I),EM(I),PERM(I)
 140  IF(NØRMAL.NE.0)GØ TØ 150
      DØ 145 I=1,N
 145  R(I)=R(I)/RBAR
 150  IF(IHAVEM.GE.0)GØ TØ 160
      DØ 155 K=1,N
      PRINT 8,K,R(K),EM(K),PERM(K),RHØ(K)
 155  CØNTINUE
      GØ TØ 170
 160  DØ 165 K=1,N
      PRINT 8,K,R(K),EM(K),PERM(K)
 8    FØRMAT(I3,1P4D15.6)
 165  CØNTINUE
 170  PERM(KLIM)=1.D0
      EM(KLIM)= 0.D0
      PRINT 1
      CALL INNMUL(R1,R2,L,A9,IAIR,ZRE,ZIM)
      PRINT 1
```

```
      PRINT 9
9     FØRMAT(6X,'NØRMALIZED CØIL IMPEDANCE')
      PRINT 10, ZRE,ZIM
10    FØRMAT(6X,'NØRMALIZED REAL PART =', 1PD16.6/
     1 6X,'NØRMALIZED IMAG PART =',1PD16.6 )
      ZABS=DSQRT(ZRE*ZRE+ZIM*ZIM)
      IF(ZRE)180,175,180
175   ZARG=PI*0.5D0
      GØ TØ 185
180   ZARG=DATAN(ZIM/ZRE)
185   CØNTINUE
      DEGR=ZARG*180.D0/PI
      PRINT 12,ZABS,ZARG,DEGR
      GØ TØ 110
190   PRINT 11
11    FØRMAT(6X,'END ØF CASES RUN ØN INNMUL PRØGRAM')
12    FØRMAT(17X,'MAGNITUDE ='1PD16.6,
     1  /10X,'  PHASE(RADIANS) ='D16.6
     2 /10X,'  PHASE(DEGREES) ='D16.6)
      PRINT 1
      STØP
      END
```

II. (B) INNMUL

The formula which is calculated by the INNMUL subroutine is the normalized coil impedance,

$$Z_n = j\int_0^\infty \left\{ \frac{2}{\alpha^6}\left[1 - \cos\left(\alpha(\ell_2-\ell_1)\right)\right] \frac{U_{12}}{U_{22}} I^2(r_2,r_1) \right.$$

$$\left. + \frac{\pi}{\alpha^6} J^2(r_2,r_1)\left[\alpha(\ell_2-\ell_1) + e^{-\alpha(\ell_2-\ell_1)} - 1\right]\right\} d\alpha$$

$$\doteq \int_0^\infty \frac{\pi}{\alpha^6} J^2(r_2,r_1)\left[\alpha(\ell_2-\ell_1) + e^{-\alpha(\ell_2-\ell_1)} - 1\right] d\alpha, \qquad (71)$$

of both the driver and pickup coils in a bifilar coil surrounded by multiple coaxial conductors.

The quantity

$$I(r_2,r_1) = \alpha^2 \int_{r_1}^{r_2} rI_1(\alpha r)dr$$

is given by Eq. (50). It is calculated by a branch to the XIINT function subprogram. Similarly, the quantity,

$$J(r_2,r_1) = \alpha^2 \int_{r_1}^{r_2} rJ_1(\alpha r)dr \ ,$$

is given by Eq. (56) and is calculated by the XJJNT subprogram. The ratio, U_{12}/U_{22}, or gamma, is calculated by a branch from INNMUL to the GAMCAL subroutine.

The XIINT, XJJNT, and GAMCAL subroutines will be discussed separately.

The integrand in the numerator of the impedance formula in INNMUL contains a term with the factor $(\alpha L + E^{-\alpha L} - 1)$, where $L = \ell_2 - \ell_1$. For values of αL less than 0.5, this factor is calculated by the rational approximation,

$$\frac{(\alpha L)^2}{2}\left\{\frac{1 + \frac{(\alpha L)^2}{180}}{1 + \frac{\alpha L}{3} + \frac{(\alpha L)^2}{30}}\right\}. \tag{72}$$

This is derived as a continued fraction approximant from the Padé table[8] associated with the power series,

$$(a - 1 + e^{-a})/\frac{a^2}{2} = \left(1 - \frac{a}{3} + \frac{a^2}{12} - \frac{a^3}{60} + \frac{a^4}{360} - \cdot\ \cdot\ \cdot\ \cdot\right) \tag{73}$$

If αL is larger than 20, $e^{-\alpha L}$ is dropped from the calculation of $(\alpha L + e^{-\alpha L} - 1)$. For αL between 0.5 and 20, $e^{-\alpha L}$ is evaluated by the exponential function subprogram available in the IBM/360 FORTRAN library.

The quantity $(1 - \cos(\alpha L)$ which appears in one term of the integrand is obtained by the half-angle formula from $\sin(\frac{\alpha L}{2})$.

The overall infinite integral is approximated in INNMUL for an upper limit of 16. The average of the integrand is calculated for 100 equally-spaced points from 0 to 1. For each of the remaining 15 intervals of unit length, the average of the integrand for 20 equally spaced points is used. This has been found to give a sufficiently good approximation to the integral and is named I7 + jI8 in the program.

At the same time during this calculation in INNMUL, integration is performed independently on the second term of the integrand to obtain an estimated air value, named I9. The air value contributes to the real part of the integral, I7, and is by far the slowest part to converge. We

---

[8] Alston S. Householder, A Glossary for Numerical Analysis, ORNL-2704, pp. 73-74.

calculate the air value in a separate program and give the value as part of the data to this program, as A9. The air value depends only on the on the coil dimensions and not on the conductor, and is

$$A9 = \pi \int_0^\infty \frac{1}{\alpha^6} J^2(r_2, r_1) \left[\alpha(\ell_2 - \ell_1)\, e^{-\alpha(\ell_2 - \ell_1)} - 1\right] d\alpha \ . \qquad (74)$$

(This term appears both in the numerator and the denominator.) Therefore, we can obtain the completely converged real part of the integral by adding the difference between A9 and I9. The completely converged real part is I7 + (A9-I9). The normalized impedance is

$$Z_n = j(I7 + A9 - I9 + jI8)/A9 \ . \qquad (75)$$

A listing of INNMUL follows.

```
      SUBRØUTINE INNMUL(R1,R2,L,A9,IAIR,ZRE,ZIM)
      IMPLICIT REAL*8 (A-H,Ø-Z)
      REAL*8 L,I7,I8,I9,J7,J8,J9
      CØMMØN/REGIØN/R(10),EM(10),PERM(10),KLIM
      CØMMØN/ALPØ/X,Q1,Q2
      DATA PI/3.1415 92653 58979D0/,KK/50/
C
C        CALCULATES MEAN CØIL IMPEDANCE, ZRE + I*ZIM, FØR
C        CØIL INSIDE CØAXIAL CYLINDRICAL CØNDUCTØRS
C
C        R1 = INNER CØIL RADIUS / MEAN CØIL RADIUS
C        R2 = ØUTER CØIL RADIUS / MEAN CØIL RADIUS
C        L  = CØIL LENGTH / MEAN CØIL RADIUS
C        A9 = NØRMALIZING AIR VALUE REQUIRED FØR INNMUL
C        IAIR.NE.1 IF INNMUL IS TØ BE USED TØ CALCULATE A9
C        IAIR = 1 IF VALUE ØF A9 IS PASSED TØ INNMUL IN CALL
C        N  = NUMBER ØF CØNDUCTØRS ØUTSIDE CØIL
C
C        SEE IF AIR VALUE HAS BEEN CALCULATED
C
      IF(IAIR.EQ.1)GØ TØ 120
C
C        CØMPUTE AIR VALUE(A9).
C
      IAIR=1
      KK=150
      PRINT 1
 1    FØRMAT(6X,'X',14X,'AIR VALUE'//)
      H1=0.01D0
      H2=1.0D0
      I9=0.D0
      G1=0.D0
      G2=H2
 100  J9=0.D0
      X=G1+H1*0.5D0
 105  Q9=X*L
      Q1=X*X
      Q2=Q1*Q1
      Q6=Q2*Q1
      Z1=X*R1
      Z2=X*R2
      S4=XJJNT(Z1,Z2,KK)
      IF(Q9.GT.0.5D0)GØ TØ 110
      F9=Q9*Q9*0.5D0*((Q9/180.D0)*Q9+1.D0)/(Q9*(.1D0*Q9+1.D0)/3.D0+1.D0
      GØ TØ 115
 110  F9=Q9-1.0D0
      IF(Q9.GT.20.0D0)GØ TØ 115
      F9=F9+DEXP(-Q9)
 115  S4=S4*S4*F9*PI
      J9=J9+S4/Q6
      X=X+H1
      IF(X.LE.G2)GØ TØ 105
      I9=I9+H1*J9
      G1=G2
      G2=G2+H2
      Ø3=X+H1*0.5D0
      PRINT 4,Ø3,I9
      H1=0.05D0
      IF(X.LT.15.5D0)GØ TØ 100
      H1=0.1D0
```

```
      IF(X.LT.199.5D0)GØ TØ 100
      A9=I9
      KK=50
      PRINT 2,A9
 2    FØRMAT('0     AIR VALUE ='1PD15.8)
      KK=50
      RETURN
C
C        INITIALIZE STEP SIZE, UPPER LIMIT, INTEGRALS
C
 120  N=KLIM-1
      H1=.01D0
      H2=1.D0
      I7=0.D0
      I8=0.D0
      I9=0.D0
C
C        CØIL IMPEDANCE- I9=AIR VALUE, I7=RE(Z/J), I8=IM(Z/J)
C
      G1=0.D0
      G2=H2
      PRINT 3
 3    FØRMAT(6X,'X',14X,'AIR VALUE',5X,'REAL PART',6X,'IMAG PART'//)
C
C        BEGIN LØØP ØN ALPHA, WHICH IS THE VARIABLE NAMED X
C
 125  J7=0.D0
      J8=0.D0
      J9=0.D0
      X=G1+H1*0.5D0
 130  Q9=X*L
      Q1=X*X
      Q2=Q1*Q1
      Q6=Q2*Q1
C
C        CALCULATIØN ØF I AND J INTEGRALS
C
      Z1=X*R1
      Z2=X*R2
      S3=XIINT(Z1,Z2,KK)
      S3=S3*DSIN(0.5D0*Q9)
      S3=S3+S3
      S3=S3*S3
      S4=XJJNT(Z1,Z2,KK)
      IF(Q9.GT.0.5D0) GØ TØ 135
      F9=Q9*Q9*0.5D0*((Q9/180.D0)*Q9+1.D0)/(Q9*(.1D0*Q9+1.D0)/3.D0+1.
      GØ TØ 140
 135  F9=Q9-1.D0
      IF(Q9.GT.20.D0) GØ TØ 140
      F9=F9+DEXP(-Q9)
 140  S4=S4*S4*F9*PI
C
C        CALCULATIØN ØF GAMMA (CØNDUCTØRS ØUTSIDE CØIL)
C
 145  CALL GAMCAL(G6,G7)
C
C        RL(GAMMA)=G6, IM(GAMMA)=G7
C
```

```
      J7=J7+(S4+G6*S3)/Q6
      J8=J8+S3*G7/Q6
150   J9=J9+S4/Q6
      X=X+H1
      IF(X.LE.G2) GØ TØ 130
      I7=H1*J7+I7
      I8=H1*J8+I8
      I9=H1*J9+I9
      G1=G2
      G2=G2+H2
      Ø3=X+H1*0.5D0
      PRINT 4,Ø3,I9,I7,I8
4     FØRMAT(F9.0,10X,3E15.7)
      H1=0.05D0
      IF(X.LT.15.5D0) GØ TØ 125
      ZRE= -I8/A9
      ZIM=(A9-I9+I7)/A9
      RETURN
      END
```

II. B(1 and 2) XJJNT and XIINT

These two function subprograms evaluate the expressions,

$$\int_{\alpha r_1}^{\alpha r_2} xJ_1(x)\,dx$$

and

$$\int_{\alpha r_1}^{\alpha r_2} xI_1(x)\,dx\ ,$$

respectively. These are equal to the values given for $J(r_2, r_1)$ in Eq. (56) and $I(r_2, r_1)$ in Eq. (50). The method of integration in both cases, for an upper limit not greater than 5, is the summation of a power series expression until the last included term is less than 10^{-8} times the current sum. If the upper limit of the integral is greater than 5, asymptotic formulas[9] are used in both subroutines. In general application, we assume in these subroutines that both limits are nonnegative and the lower limit is less than or equal to the upper limit on the integral.

An explanation follows for the summation method, which is used in the case that the upper limit is less than or equal to 5.

For the purpose of explaining the general method of integration, let $f(x)$ be any function of a real variable with the Taylor series expansion,

$$f(x) = \sum_{n=0}^{\infty} \frac{c_n x^n}{n!}\ . \tag{76}$$

Termwise integration yields

$$\int_a^b f(x)\,dx = \sum_{n=0}^{\infty} \frac{c_n}{(n+1)} \frac{(b^{n+1} - a^{n+1})}{n!}$$

$$= \sum_{n=0}^{\infty} c_n \frac{(b^{n+1} - a^{n+1})}{(n+1)!}\ . \tag{77}$$

---

[9] W. A. Simpson et al., Computer Programs for Some Eddy-Current Problems — 1970, ORNL-TM-3295 p. 259 (June 1971).

Introduce a new sequence,

$$qn = \frac{b^n - a^n}{n!} ,$$

and it is seen that $q_0=1$, $q_1=b-a$, $q_2 = \frac{b^2 - a^2}{2}$, and so on. In relation to this sequence, our integral may be written as

$$\sum_{n=0}^{\infty} c_n \, q_{n+1} \; . \tag{78}$$

This is the series to be approximated.

Recurrence relations may be derived to get the terms of the q-sequence in the following way. Use the algebraic identity

$$b^n - a^n = (a+b)(b^{n-1} - a^{n-1}) - ab(b^{n-2} - a^{n-2}) \; . \tag{79}$$

This gives, with $n!q_n = (b^n - a^n)$, $n!q_n = (a+b)(n-1)! \; q_{n-1} - ab(n-2)! \; q_{n-2}$. Then division by n! and simplification gives

$$q_n = \left[(a+b)q_{n-1} - \frac{ab \; q_{n-2}}{(n-1)}\right]/n \; . \tag{80}$$

Similarly, one can start with the identity

$$b^n - a^n = (a^2+b^2)(b^{n-2} - a^{n-2}) - a^2b^2(b^{n-4} - a^{n-4}) \tag{81}$$

to obtain a second useful recurrence relation,

$$q_n = \left[(a^2+b^2)q_{n-2} - \frac{a^2b^2q_{n-4}}{(n-2)(n-3)}\right]/n(n-1) \; . \tag{82}$$

In the functions XJJNT and XIINT, the second recurrence relation is used for n greater than 3, since alternate terms are zero for the power series of $xJ_1(x)$ and $xI_1(x)$.

In order to apply this integration procedure, look first at the power series[10] for $I_1(x)$:

$$I_1(x) = \sum_{r=0}^{\infty} \frac{(1/2\ x)^{2r+1}}{r!\ (r+1)!} \quad . \tag{83}$$

Then

$$xI_1(x) = \sum_{r=0}^{\infty} \frac{x^{2r+2}}{2^{2r+1}\ r!\ (r+1)!} \quad . \tag{84}$$

Let s=r+1,

$$xI_1(x) = \sum_{s=1}^{\infty} \frac{x^{2s}}{2^{2s-1}(s-1)!\ s!} \quad . \tag{85}$$

Let k=2s,

$$xI_1(x) = \sum_{\substack{k=2 \\ \text{(even values only)}}}^{\infty} \frac{x^k\ (k!)}{2^{k-1}(k/2-1)!\,(k/2)!\,(k!)} \quad . \tag{86}$$

In the preceding expression, (k!) has been multiplied into numerator and denominator, to coincide with the Taylor series

$$\sum_{k=0}^{\infty} c_k \frac{x^k}{k!} \ .$$

Then it is easily seen that the coefficients for an even number k are: $c_2 = 1$, $c_4 = 3/2$, $c_6 = 15/8$, with

$$c_k = \frac{k!}{2^{k-1}(k/2-1)!\,(k/2)!} \quad . \tag{87}$$

These even-indexed coefficients are related by $c_{k+2}/c_k = (k+1)/k$. All other coefficients, c_0, c_1, c_3, c_5, . . . are zero. The same coefficients hold for

---

[10] H. Jeffreys and B. S. Jeffreys, Methods of Mathematical Physics, p. 574, Cambridge University Press, 1950.

$$\int_{\alpha r_1}^{\alpha r_2} xJ_1(x)\,dx\ ,$$

with the exception that the terms are alternating in sign.

The summation method, which is described above, is combined with the asymptotic formulas[9], for the case that the lower limit is less than or equal to 5, but the upper limit is greater than 5.

Listings of XIINT and XJJNT follow.

```
      FUNCTION XIINT(X1,X2,KK)
C
C        COMPUTES INTEGRAL FROM X1 TO X2 OF X*I1(X).
C        FOR X2.LE.5, METHOD USED IS
C        BY SUMMING A POWER SERIES EXPRESSION UNTIL THE
C        LAST INCLUDED TERM IS LESS THAN 1.E-8 TIMES THE SUM.
C
      IMPLICIT REAL*8 (A-H,O-Z)
      DATA X5 / 1.0435068D2/
C
C        X5 IS THE INTEGRAL FROM 0 TO 5.
C
C        CHECK SIZE OF X2
C
      IF(X2.GT.5.D0) GO TO 300
C
C        INITIALIZE TERMS IN SUM,DENOMINATORS,ETC.
C
      IFLAG=0
 90   A=X1*.5D0
      A2=A**2
 100  B=X2*.5D0
      B2=B**2
      P1=B-A
      C=B+A
      P2=C*P1
      D=B*A
      OOLD=C*P2-D*P1
      P4=C*OOLD-D*P2
      O=0.5D0*(C*P4-D*OOLD)
      C=P2+A2
      D=B2*A2
      SUM=OOLD/3.D0
      D1=2.D0
      D2=6.D0
      E=D2
      TNP3=5.D0
      T=O/TNP3
C
C        BEGIN SUM
C
      DO 105 K=1,KK
      SUM=T+SUM
      ONEW=(C*O-D*OOLD/D1)/D2
      TNP3=TNP3+2.D0
      T=ONEW/TNP3
C
C        TEST CONVERGENCE
C
      IF(T/SUM .LT. 1.E-8) GO TO 110
      OOLD=O
      O=ONEW
      D1=D2
      D2=D2+E
      E=E+2.D0
 105  CONTINUE
C
C        PRINT NON-CONVERGENCE MESSAGE
```

```
C
      PRINT 1,KK,X1,X2,T,SUM
 1    FORMAT('0XIINT DID NOT CONVERGE IN',I3,' TERMS'/
     1' X1 ='1PE14.5,' X2 =',E14.5,' T=',E14.5,' SUM =',E14.5)
      PRINT 50
 50   FORMAT(' SAVS')
      STOP
 110  XIINT=4.D0*(SUM+T)
      IF(IFLAG.EQ.0)RETURN
      GO TO 320
C
C         ASYMPTOTIC SERIES FOR X2.GT.5
C         (CERNL TN-3295, P.202)
C
 300  XX=X2
      IGO=1
 305  RX=1.D0/XX
      P3=(((((((1660.794D0*RX-1737.556D0)*RX+543.6694D0)*RX
     1 +11.81804D0)*RX-33.78366D0)*RX+5.108402D0)*RX-0.6130935D0)*RX
     2 -0.3360836D0)*RX+0.3987795D0
      P3=P3*DEXP(XX)*DSQRT(XX)
 309  GO TO (310,315),IGO
 310  IF(X1.NE.0.D0)GO TO 311
      XIINT=P3
      RETURN
 311  XX=X1
      W=P3
      IGO=2
      IF(XX.GT.5.D0)GO TO 305
      IFLAG=1
      T1=X2
      X2=5.D0
      GO TO 90
 320  P3=X5-XIINT
      X2=T1
 315  XIINT=W-P3
      RETURN
      END
```

```
      FUNCTION XJONT(X1,X2,KK)
C
C        COMPUTES INTEGRAL FROM X1 TO X2 OF X*J1(X).
C        FOR X2.LE.5, METHOD USED IS
C        BY SUMMING A POWER SERIES EXPRESSION UNTIL THE
C        LAST INCLUDED TERM IS LESS THAN 1.E-8 TIMES THE SUM.
C
      IMPLICIT REAL*8 (A-H,O-Z)
      DATA RT2OPI/0.79788 45608 028654 D0/,
     1     PIO4/0.78539 81633 974483 D0/
C
C
C        CHECK SIZE OF X2
C
      IF(X2.GT.5.D0) GO TO 300
C
C        INITIALIZE TERMS IN SUM,DENOMINATORS,ETC.
C
      IFLAG=0
 90   A=X1*.5D0
      A2=A**2
      B=X2*.5D0
      B2=B**2
      P1=B-A
      C=B+A
      P2=C*P1
      D=B*A
      OOLD=C*P2-D*P1
      P4=C*OOLD-D*P2
      O=0.5D0*(C*P4-D*OOLD)
      C=B2+A2
      D=B2*A2
      SUM=OOLD/3.D0
      D1=2.D0
      D2=6.D0
      E=D2
      SIGN=-1.D0
      TNP3=5.D0
      T=-O/TNP3
C
C        BEGIN SUM
C
      DO 100 K=1,KK
      SUM=T+SUM
      ONEW=(C*O-D*OOLD/D1)/D2
      SIGN=-SIGN
      TNP3=TNP3+2.D0
      T=SIGN*ONEW/TNP3
C
C        TEST CONVERGENCE
C
      IF(DABS(T/SUM).LT.1.D-8) GO TO 105
      OOLD=O
      O=ONEW
      D1=D2
      D2=D2+E
      E=E+2.D0
 100  CONTINUE
```

```
C
C          PRINT NON-CONVERGENCE MESSAGE
C
      PRINT 1,KK,X1,X2,T,SUM
 1    FORMAT('0XJJNT DID NOT CONVERGE IN',I3,' TERMS'/
     1' X ='1PE14.5,' X2 ='E14.5,' T =',E14.5,' SUM =',E14.5)
      PRINT 50
 50   FORMAT(' SAVS')
      STOP
 105  XJJNT=4.D0*(SUM+T)
      IF(IFLAG.EQ.0)RETURN
      GO TO 320
C
C          ASYMPTOTIC SERIES FOR X2.GT.5
C          (GRNL TM-3295, PG.259)
C
 300  XX=X2
      IGG=1
 305  RX=1.0D0/XX
      ARG=XX-PIG4
      C1=(((((-188.1357D0*RX+109.1142D0)*RX
     1 -23.79333D0)*RX+2.050931D0)*RX
     2 -0.1730503D0)*RX+0.7034845D0)*RX-6.4109D-5
      C2=((((-5.817517D0*RX+2.105874D0)*RX-0.089619GD0)*RX
     & +0.4952024D0)*RX
     1 -1.87344D-3)*RX+0.7979095D0
      P3 = 1.D0 - DSQRT(XX)*(C2*DCOS(ARG) - C1*DSIN(ARG))
      GO TO (310,315),IGG
 310  CONTINUE
      IF(X1.NE.0.D0)GO TO 311
      XJJNT=P3
      RETURN
 311  XX=X1
      W=P3
      IGG=2
      IF(XX.GT.5.D0)GO TO 305
      IFLAG=1
      T1=X2
      T1=X1
      X2=T1
      X1=0.D0
      GO TO 90
 320  P3=XJJNT
      X1=T1
      X2=T1
 315  XJJNT=W-P3
      RETURN
      END
```

II. B(3) GAMCAL

The GAMCAL subroutine is used by INNMUL to compute gamma ratio, U_{12}/U_{22}, which appears in the first term of the integrand of interest in INNMUL.

It is necessary in the calculations of GAMCAL to have given the quantity, $\omega\mu_k\sigma_k\bar{r}_m^{\,2}$, named M_k, for each conductor. In this product $\bar{r}_m$ is the mean coil radius in meters. The angular frequency of the driving current is given by ω. The other variables μ_k and σ_k are the permeability and conductivity, respectively, of the conductor. For each conductor,

$$\alpha_k = \sqrt{\alpha^2 + jM_k} \quad ,$$

where α is the variable of integration in INNMUL. Then,

$$Rl(\alpha_k) = \sqrt{1/2(\alpha^2 + \sqrt{\alpha^4 + M_k^{\,2}})}$$

$$Im(\alpha_k) = 1/2\ M_k/Rl(\alpha_k) \ . \tag{88}$$

The inner radius and relative permeability must also be known for each conductor for the calculations to obtain gamma. Caution must be exercised in the case of a large permeability that the calculations do not lead to computer overflow or underflow.

The use of the zero-th and first order modified Bessel functions has been seen in the chapter dealing with theoretical analysis. New subroutines have been written to secure more significant figures than previously available in the calculations of GAMCAL. These subroutines, names MODBES, CMDBES, COMKB, and CMI, will be described individually.

A distinction is made between a normal conductor region and a "thin" conductor region. A region is classified as thin if

$$(r_{k-1} - r_k)/r_{k-1} \leq 0.1 \ .$$

The elements of the T-matrix at r_{k-1}, the outer boundary of region k, are

$$T_{11}(k,k-1) = zK_0(z)I_1(\alpha_{k-1}r_{k-1}) + (\mu_k/\mu_{k-1})\,\alpha_{k-1}r_{k-1}\,I_0(\alpha_{k-1}r_{k-1})\,K_1(z) \tag{89}$$

$$T_{12}(k,k-1) = zK_0(z)K_1(\alpha_{k-1}r_{k-1}) - (\mu_k/\mu_{k-1})\,\alpha_{k-1}r_{k-1}\,K_0(\alpha_{k-1}r_{k-1})\,K_1(z) \tag{90}$$

$$T_{21}(k,k-1) = zI_0(z)I_1(\alpha_{k-1}r_{k-1}) - (\mu_k/\mu_{k-1})\,\alpha_{k-1}r_{k-1}\,I_0(\alpha_{k-1}r_{k-1})\,I_1(z) \tag{91}$$

and

$$T_{22}(k,k-1) = zI_0(z)K_1(\alpha_{k-1}r_{k-1}) + (\mu_k/\mu_{k-1})\,\alpha_{k-1}r_{k-1}\,K_0(\alpha_{k-1}r_{k-1})\,I_1(z) \tag{92}$$

where $Z = \alpha_k r_{k-1}$. (93)

For crossing a normal, or "thick" region, these matrix elements are computed by GAMCAL according to the above relationships.

However, if the region is "thin", a special procedure is used. In that case, note that at the inner boundary, r_k, of the region k, the matrix elements are

$$T_{11}(k+1,k) = \alpha_{k+1}r_kK_0(\alpha_{k+1}r_k)I_1(z+h) + (\mu_{k+1}/\mu_k)\,(z+h)\,I_0(z+h)\,K_1(\alpha_{k+1}r_k)\,, \tag{94}$$

$$T_{12}(k+1,k) = \alpha_{k+1}r_kK_0(\alpha_{k+1}r_k)K_1(z+h) - (\mu_{k+1}/\mu_k)\,(z+h)\,K_0(z+h)\,K_1(\alpha_{k+1}r_k)\,, \tag{95}$$

$$T_{21}(k+1,k) = \alpha_{k+1} r_k I_0(\alpha_{k+1} r_k) I_1(z+h) \tag{96}$$

$$- (\mu_{k+1}/\mu_k)\ (z+h)\ I_0(z+h)\ I_1(\alpha_{k+1} r_k)\ ,$$

and

$$T_{22}(k+1,k) = \alpha_{k+1} r_k I_0(\alpha_{k+1} r_k) K_1(z+h) \tag{97}$$

$$+ (\mu_{k+1}/\mu_k)\ (z+h)\ K_0(z+h)\ I_1(\alpha_{k+1} r_k)$$

where $h = \alpha_k (r_k - r_{k-1})$. (98)

To cross region k, the T-matrix is the product $\underset{\sim}{T}_{k+1,k}\ \underset{\sim}{T}_{k,k-1} = \underset{\sim}{T}_{k+1,k-1}$. In the following equations we will drop the (k+1,k-1) for convenience. The matrix elements of the product are then

$$T_{11} = T_{11}(k+1,k)\ T_{11}(k,k-1) + T_{12}(k+1,k)\ T_{21}(k,k-1)\ , \tag{99}$$

$$T_{12} = T_{11}(k+1,k)\ T_{12}(k,k-1) + T_{12}(k+1,k)\ T_{22}(k,k-1)\ , \tag{100}$$

$$T_{21} = T_{21}(k+1,k)\ T_{11}(k,k-1) + T_{22}(k+1,k)\ T_{21}(k,k-1)\ , \tag{101}$$

and

$$T_{22} = T_{21}(k+1,k)\ T_{12}(k,k-1) + T_{22}(k+1,k)\ T_{22}(k,k-1)\ . \tag{102}$$

This matrix multiplication yields the following complex elements of the product matrix:

$$T_{11} = \alpha_{k+1} r_k K_0(\alpha_{k+1} r_k) I_1(\alpha_{k-1} r_{k-1}) z\left[K_0(z) I_1(z+h) + I_0(z) K_1(z+h)\right] \tag{103}$$

$$+ (\mu_{k+1}/\mu_k) K_1(\alpha_{k+1} r_k) I_1(\alpha_{k-1} r_{k-1}) z(z+h)\left[I_0(z+h) K_0(z) - K_0(z+h) I_0(z)\right]$$

$$+ (\mu_k/\mu_{k-1}) \alpha_{k-1} r_{k-1} I_0(\alpha_{k-1} r_{k-1}) \alpha_{k+1} r_k K_0(\alpha_{k+1} r_k)\left[K_1(z) I_1(z+h) - I_1(z) K_1(z+h)\right]$$

$$+ (\mu_{k+1}/\mu_{k-1}) \alpha_{k-1} r_{k-1} I_0(\alpha_{k-1} r_{k-1}) K_1(\alpha_{k+1} r_k)(z+h)\left[I_0(z+h) K_1(z) + K_0(z+h) I_1(z)\right],$$

$$T_{21} = \alpha_{k+1} r_k I_0(\alpha_{k+1} r_k) I_1(\alpha_{k-1} r_{k-1}) z\left[K_0(z) I_1(z+h) + I_0(z) K_1(z+h)\right] \tag{105}$$

$$- (\mu_{k+1}/\mu_k) I_1(\alpha_{k-1} r_{k-1}) I_1(\alpha_{k+1} r_k) z(z+h)\left[K_0(z) I_0(z+h) - I_0(z) K_0(z+h)\right]$$

$$+ (\mu_k/\mu_{k-1}) \alpha_{k-1} r_{k-1} I_0(\alpha_{k-1} r_{k-1}) \alpha_{k+1} r_k I_0(\alpha_{k+1} r_k)\left[K_1(z) I_1(z+h) - I_1(z) K_1(z+h)\right]$$

$$- (\mu_{k+1}/\mu_{k-1}) \alpha_{k-1} r_{k-1} I_0(\alpha_{k-1} r_{k-1}) I_1(\alpha_{k+1} r_k)(z+h)\left[I_0(z+h) K_1(z) + K_0(z+h) I_1(z)\right],$$

$$T_{12} = \alpha_{k+1} r_k K_0(\alpha_{k+1} r_k) K_1(\alpha_{k-1} r_{k-1}) z\left[K_0(z) I_1(z+h) + I_0(z) K_1(z+h)\right] \tag{104}$$

$$+ (\mu_{k+1}/\mu_k) K_1(\alpha_{k+1} r_k) K_1(\alpha_{k-1} r_{k-1}) z(z+h)\left[K_0(z) I_0(z+h) - I_0(z) K_0(z+h)\right]$$

$$- (\mu_k/\mu_{k-1}) \alpha_{k+1} r_k K_0(\alpha_{k+1} r_k) \alpha_{k-1} r_{k-1} K_0(\alpha_{k-1} r_{k-1})\left[I_1(z+h) K_1(z) - I_1(z) K_1(z+h)\right]$$

$$- (\mu_{k+1}/\mu_{k-1}) \alpha_{k-1} r_{k-1} K_0(\alpha_{k-1} r_{k-1}) K_1(\alpha_{k+1} r_k)(z+h)\left[I_0(z+h) K_1(z) + I_1(z) K_0(z+h)\right],$$

and

$$T_{22} = \alpha_{k+1} r_k I_0(\alpha_{k+1} r_k) K_1(\alpha_{k-1} r_{k-1}) z\left[K_0(z) I_1(z+h) + I_0(z) K_1(z+h)\right] \tag{106}$$

$$- (\mu_{k+1}/\mu_k) K_1(\alpha_{k-1} r_{k-1}) I_1(\alpha_{k+1} r_k) z(z+h)\left[K_0(z) I_0(z+h) - I_0(z) K_0(z+h)\right]$$

$$- (\mu_k/\mu_{k-1}) \alpha_{k-1} r_{k-1} K_0(\alpha_{k-1} r_{k-1}) \alpha_{k+1} r_k I_0(\alpha_{k+1} r_k)\left[K_1(z) I_1(z+h) - I_1(z) K_1(z+h)\right]$$

$$+ (\mu_{k+1}/\mu_{k-1}) \alpha_{k-1} r_{k-1} K_0(\alpha_{k-1} r_{k-1}) I_1(\alpha_{k+1} r_k)(z+h)\left[I_0(z+h) K_1(z) + I_1(z) K_0(z+h)\right].$$

Note that the functions in the square brackets in each matrix element are just four combinations of modified Bessel functions:

$$G_1(z,h) = z\left[K_0(z)I_1(z+h) + I_0(z)K_1(z+h)\right], \tag{107}$$

$$G_2(z,h) = z(z+h)\left[K_0(z)I_0(z+h) - I_0(z)K_0(z+h)\right], \tag{108}$$

$$G_3(z,h) = \left[I_1(z+h)K_1(z) - I_1(z)K_1(z+h)\right], \text{ and} \tag{109}$$

$$G_4(z,h) = (z+h)\left[I_0(z+h)K_1(z) + I_1(z)K_0(z+h)\right]. \tag{110}$$

These functions are calculated by a subroutine named GCALC, which will be described separately.

The matrix elements are, then, in the case of the thin region, n,

$$\begin{aligned} T_{11} = {} & \alpha_{n+1}r_nK_0(\alpha_{n+1}r_n)I_1(\alpha_{n-1}r_{n-1})G_1(z,h) \\ & + (\mu_{n+1}/\mu_n)K_1(\alpha_{n+1}r_n)I_1(\alpha_{n-1}r_{n-1})G_2(z,h) \\ & + (\mu_n/\mu_{n-1})\alpha_{n-1}r_{n-1}I_0(\alpha_{n-1}r_{n-1})\alpha_{n+1}r_nK_0(\alpha_{n+1}r_n)G_3(z,h) \\ & + (\mu_{n+1}/\mu_{n-1})\alpha_{n-1}r_{n-1}I_0(\alpha_{n-1}r_{n-1})K_1(\alpha_{n+1}r_n)G_4(z,h)\ , \end{aligned} \tag{111}$$

$$\begin{aligned} T_{12} = {} & \alpha_{n+1}r_nK_0(\alpha_{n+1}r_n)K_1(\alpha_{n-1}r_{n-1})G_1(z,h) \\ & + (\mu_{n+1}/\mu_n)K_1(\alpha_{n+1}r_n)K_1(\alpha_{n-1}r_{n-1})G_2(z,h) \\ & - (\mu_n/\mu_{n-1})\alpha_{n+1}r_nK_0(\alpha_{n+1}r_n)\alpha_{n-1}r_{n-1}K_0(\alpha_{n-1}r_{n-1})G_3(z,h) \\ & - (\mu_{n+1}/\mu_{n-1})\alpha_{n-1}r_{n-1}K_0(\alpha_{n-1}r_{n-1})K_1(\alpha_{n+1}r_n)G_4(z,h)\ , \end{aligned} \tag{112}$$

$$T_{21} = \alpha_{n+1} r_n I_0(\alpha_{n+1} r_n) I_1(\alpha_{n-1} r_{n-1}) G_1(z,h) \tag{113}$$

$$- (\mu_{n+1}/\mu_n) I_1(\alpha_{n-1} r_{n-1}) I_1(\alpha_{n+1} r_n) G_2(z,h)$$

$$+ (\mu_n/\mu_{n-1}) \alpha_{n-1} r_{n-1} I_0(\alpha_{n-1} r_{n-1}) \alpha_{n+1} r_n I_0(\alpha_{n+1} r_n) G_3(z,h)$$

$$- (\mu_{n+1}/\mu_{n-1}) \alpha_{n-1} r_{n-1} I_0(\alpha_{n-1} r_{n-1}) I_1(\alpha_{n+1} r_n) G_4(z,h), \text{ and}$$

$$T_{22} = \alpha_{n+1} r_n I_0(\alpha_{n+1} r_n) K_1(\alpha_{n-1} r_{n-1}) G_1(z,h) \tag{114}$$

$$- (\mu_{n+1}/\mu_n) K_1(\alpha_{n-1} r_{n-1}) I_1(\alpha_{n+1} r_n) G_2(z,h)$$

$$- (\mu_n/\mu_{n-1}) \alpha_{n-1} r_{n-1} K_0(\alpha_{n-1} r_{n-1}) \alpha_{n+1} r_n I_0(\alpha_{n+1} r_n) G_3(z,h)$$

$$+ (\mu_{n+1}/\mu_{n-1}) \alpha_{n-1} r_{n-1} K_0(\alpha_{n-1} r_{n-1}) I_1(\alpha_{n+1} r_n) G_4(z,h) \ .$$

A listing of GAMCAL follows.

```
      SUBRØUTINE GAMCAL(GAMRE,GAMIM)
      IMPLICIT REAL*8 (A-H, Ø-Z)
C
C        CØMPUTES THE REAL AND IMAGINARY PARTS ØF GAMMA
C
      DIMENSIØN T(8),U(4),V(3),F(8),G(8),Z(8)
      CØMMØN /REGIØN/ R(10),EM(10),PERM(10),KLIM
      CØMMØN /TEMPS/ A(39)
C
C        THE FØLLØWING EQUIVALENCE CØNSERVES STØRAGE
C
      EQUIVALENCE (T(1),A(1)), (F(1),A(9)), (G(1),A(17)),
     1 (Z(1),A(25)), (U(1),A(33)), (V(1),A(37))
      CØMMØN /ALPØ/ ALFA,ALSQ,ALFØ
C
C        NREG     NUMBER ØF CØNDUCTØRS ØUTSIDE CØIL
C        KLIM     ØNE MØRE THAN NREG
C        R(I)     INNER RADIUS
C        EM(I)    ØMEGA*MU(I)*SIGMA(I)*RBAR**2
C        PERM(I)  PERMEABILITY (MU)
C        ALFA     ALPHA, VARIABLE ØF INTEGRATIØN
C        ALSQ     ALFA**2
C        ALFØ     ALFA**4
C
      U(1)=0.D0
      U(2)=0.D0
      U(4)=0.D0
      U(3)=1.D0
      A1=DSQRT(.5D0*(ALSQ+DSQRT(ALFØ+EM(1)**2)))
      A2=.5D0*EM(1)/A1
C
C        A1 = RE(ALFA(1)), A2 = IM(ALFA(1))
C
      K=2
C
C        BEGIN LØØP ØN REGIØNS
C
 100  B1=A1*R(K-1)
      B2=A2*R(K-1)
      IF(B2.NE.0.D0) GØ TØ 110
      CALL MØDBES(B1,F(1),F(3),F(5),F(7))
      F(1)=F(1)*B1
      F(3)=F(3)*B1
      DØ 105 I=2,8,2
 105  F(I)=0.D0
      GØ TØ 115
 110  CALL CMDBES(B1,B2,F)
 115  DØ 120 I=1,8
 120  Z(I)=F(I)
      A3=DSQRT(.5D0*(ALSQ+DSQRT(ALFØ+EM(K)**2)))
      A4=.5D0*EM(K)/A3
      IF(K.EQ.KLIM) GØ TØ 140
C
C        CHECK FØR THIN REGIØN
C
      TREL=(R(K-1)-R(K))/R(K-1)
      IF (TREL.GT..1D0) GØ TØ 140
```

```
C
C         THIN REGION - EVALUATE BESSEL FNS OF ALFA(K+1)*R(K)
C
      A5=DSQRT(.5D0*(ALSQ+DSQRT(ALF0+EM(K+1)**2)))
      A6=.5D0*EM(K+1)/A5
      B5=A5*R(K)
      B6=A6*R(K)
      IF(B6.NE.0.D0) GO TO 130
      CALL MODBES(B5,F(1),F(3),F(5),F(7))
      F(1)=F(1)*B5
      F(3)=F(3)*B5
      DO 125 I=2,8,2
 125  F(I)=0.D0
      GO TO 135
 130  CALL CMDBES(B5,B6,F)
C
C         CALCULATE G FUNCTIONS
C
 135  CALL GCALC(A3,A4,K,G)
C
C         CALCULATE ELEMENTS OF T MATRIX AT R(K)
C
      C1=PERM(K+1)/PERM(K)
      C2=PERM(K)/PERM(K-1)
      C3=C2*C1
      Z1=Z(5)*G(1)-Z(6)*G(2)
      Z2=Z(5)*G(2)+Z(6)*G(1)
      T(1)=Z1*F(3)-Z2*F(4)
      T(2)=Z1*F(4)+Z2*F(3)
      T(5)=Z1*F(1)-Z2*F(2)
      T(6)=Z1*F(2)+Z2*F(1)
      Z1=Z(7)*G(1)-Z(8)*G(2)
      Z2=Z(7)*G(2)+Z(8)*G(1)
      T(3)=Z1*F(3)-Z2*F(4)
      T(4)=Z1*F(4)+Z2*F(3)
      T(7)=Z1*F(1)-Z2*F(2)
      T(8)=Z1*F(2)+Z2*F(1)
      Z1=Z(5)*G(3)-Z(6)*G(4)
      Z2=Z(5)*G(4)+Z(6)*G(3)
      T(1)=T(1)+C1*(Z1*F(7)-Z2*F(8))
      T(2)=T(2)+C1*(Z1*F(8)+Z2*F(7))
      T(5)=T(5)-C1*(Z1*F(5)-Z2*F(6))
      T(6)=T(6)-C1*(Z1*F(6)+Z2*F(5))
      Z1=Z(7)*G(3)-Z(8)*G(4)
      Z2=Z(7)*G(4)+Z(8)*G(3)
      T(3)=T(3)+C1*(Z1*F(7)-Z2*F(8))
      T(4)=T(4)+C1*(Z1*F(8)+Z2*F(7))
      T(7)=T(7)-C1*(Z1*F(5)-Z2*F(6))
      T(8)=T(8)-C1*(Z1*F(6)+Z2*F(5))
      Z1=Z(1)*G(5)-Z(2)*G(6)
      Z2=Z(1)*G(6)+Z(2)*G(5)
      T(1)=T(1)+C2*(Z1*F(3)-Z2*F(4))
      T(2)=T(2)+C2*(Z1*F(4)+Z2*F(3))
      T(5)=T(5)+C2*(Z1*F(1)-Z2*F(2))
      T(6)=T(6)+C2*(Z1*F(2)+Z2*F(1))
      Z1=Z(3)*G(5)-Z(4)*G(6)
      Z2=Z(4)*G(5)+Z(3)*G(6)
```

```
      T(3)=T(3)-C2*(Z1*F(3)-Z2*F(4))
      T(4)=T(4)-C2*(Z1*F(4)+Z2*F(3))
      T(7)=T(7)-C2*(Z1*F(1)-Z2*F(2))
      T(8)=T(8)-C2*(Z1*F(2)+Z2*F(1))
      Z1=Z(1)*G(7)-Z(2)*G(8)
      Z2=Z(1)*G(8)+Z(2)*G(7)
      T(1)=T(1)+C3*(Z1*F(7)-Z2*F(8))
      T(2)=T(2)+C3*(Z1*F(8)+Z2*F(7))
      T(5)=T(5)-C3*(Z1*F(5)-Z2*F(6))
      T(6)=T(6)-C3*(Z1*F(6)+Z2*F(5))
      Z1=Z(3)*G(7)-Z(4)*G(8)
      Z2=Z(3)*G(8)+Z(4)*G(7)
      T(3)=T(3)-C3*(Z1*F(7)-Z2*F(8))
      T(4)=T(4)-C3*(Z1*F(8)+Z2*F(7))
      T(7)=T(7)+C3*(Z1*F(5)-Z2*F(6))
      T(8)=T(8)+C3*(Z1*F(6)+Z2*F(5))
C
C        UPDATE K AND ALPHA
C
      K=K+2
      A1=A5
      A2=A6
      GØ TØ 160
C
C        THICK REGIØN - CALCULATE BESSEL FNS ØF ALFA(K)*R(K-1)
C
 140  CØNTINUE
      B3=A3*R(K-1)
      B4=A4*R(K-1)
      IF(B4.NE.0.D0) GØ TØ 150
      CALL MØDBES(B3,F(1),F(3),F(5),F(7))
      F(1)=F(1)*B3
      F(3)=F(3)*B3
      DØ 145 I=2,8,2
 145  F(I)=0.D0
      GØ TØ 155
 150  CALL CMDBES(B3,B4,F)
C
C        CALCULATE ELEMENTS ØF T-MATRIX AT R(K-1)
C
 155  P=PERM(K)/PERM(K-1)
      T(1)=F(3)*Z(5)-F(4)*Z(6)+P*(F(7)*Z(1)-F(8)*Z(2))
      T(2)=F(3)*Z(6)+F(4)*Z(5)+P*(F(7)*Z(2)+F(8)*Z(1))
      T(3)=F(3)*Z(7)-F(4)*Z(8)-P*(F(7)*Z(3)-F(8)*Z(4))
      T(4)=F(3)*Z(8)+F(4)*Z(7)-P*(F(7)*Z(4)+F(8)*Z(3))
      T(5)=F(1)*Z(5)-F(2)*Z(6)-P*(F(5)*Z(1)-F(6)*Z(2))
      T(6)=F(1)*Z(6)+F(2)*Z(5)-P*(F(5)*Z(2)+F(6)*Z(1))
      T(7)=F(1)*Z(7)-F(2)*Z(8)+P*(F(5)*Z(3)-F(6)*Z(4))
      T(8)=F(1)*Z(8)+F(2)*Z(7)+P*(F(5)*Z(4)+F(6)*Z(3))
      K=K+1
      A1=A3
      A2=A4
C
C        MULTIPLY TU = V, STØRE V INTØ U
C
 160  CØNTINUE
```

```
      V(1)=T(1)*U(1)-T(2)*U(2)+T(3)*U(3)-T(4)*U(4)
      V(2)=T(1)*U(2)+T(2)*U(1)+T(3)*U(4)+T(4)*U(3)
      V(3)=T(5)*U(1)-T(6)*U(2)+T(7)*U(3)-T(8)*U(4)
      U(4)=T(5)*U(2)+T(6)*U(1)+T(7)*U(4)+T(8)*U(3)
      U(3)=V(3)
      U(2)=V(2)
      U(1)=V(1)
C
C        CHECK FØR MØRE REGIØNS
C
      IF(K.LE.KLIM) GØ TØ 100
C
C        CALCULATE GAMMA
C
      TEMP=U(4)/U(3)
      DENØ=TEMP*U(4)+U(3)
      GAMRE=(U(1)+TEMP*U(2))/DENØ
      GAMIM=(U(2)-TEMP*U(1))/DENØ
      RETURN
      END
```

II. B(3a) GCALC

This subroutine is used to implement a special procedure for "thin" conductor regions in the computations of GAMCAL for the gamma factor, U_{12}/U_{22}.

GCALC computes the real and imaginary parts of the four functions,

$$G_1(z,h) = z\left[K_0(z)I_1(z+h) + I_0(z)K_1(z+h)\right], \tag{115}$$

$$G_2(z,h) = z(z+h)\left[K_0(z)I_0(z+h) - I_0(z)K_0(z+h)\right], \tag{116}$$

$$G_3(z,h) = \left[I_1(z+h)K_1(z) - I_1(z)K_1(z+h)\right], \text{ and} \tag{117}$$

$$G_4(z,h) = (z+h)\left[I_0(z+h)K_1(z) + I_1(z)K_0(z+h)\right]. \tag{118}$$

In the above functions, $z = \alpha_k r_{k-1}$ and $h = \alpha_k(r_k - r_{k-1})$ in keeping with definitions in the rest of this report.

To preserve accuracy in the calculation of the G functions for h small compared with z (i.e., a thin region), we expand the Bessel functions at z+h in Taylor series about z:

$$I_0(z+h) = \sum_{k=0}^{\infty} I_0^{(k)}(z)\frac{h^k}{k!} \quad , \tag{119}$$

$$I_1(z+h) = \sum_{k=0}^{\infty} I_1^{(k)}(z)\frac{h^k}{k!} \quad , \tag{120}$$

$$K_0(z+h) = \sum_{k=0}^{\infty} K_0^{(k)}(z)\frac{h^k}{k!} \quad , \tag{121}$$

and

$$K_1(z+h) = \sum_{k=0}^{\infty} K_1^{(k)}(z)\frac{h^k}{k!} \tag{122}$$

where $I_0^{(k)}(z) \equiv \left(\frac{d}{dz} I_0(z)\right)^k$.

Derivatives are needed for these Bessel functions at z. Use at made of the known relations,[11]

$$I_0^{(k)}(z) = I_1^{(k-1)}(z) , \tag{123}$$

$$I_1^{(1)}(z) = I_0(z) - \frac{1}{z} I_1(z) , \tag{124}$$

$$K_0^{(k)}(z) = -K_1^{(k-1)}(z) , \text{ and} \tag{125}$$

$$K_1^{(1)}(z) = -K_0(z) - \frac{1}{z} K_1(z) . \tag{126}$$

For k = 1, Eq. (124) is a case of the general relation,

$$I_1^{(k)}(z) = -\frac{k}{z} I_1^{(k-1)}(z) + I_0^{(k-1)}(z) + \frac{k-1}{2} I_0^{(k-2)}(z) . \tag{127}$$

This can be verified by induction on k. Replace k in Eq. (127) by k+1, and compare the result obtained by differentiating Eq. (127) and adding 1/z times Eq. (127) to the result.

Similarly, Eq. (126) is a special case, for k=1, of the relation

$$K_1^{(k)}(z) = -\frac{k}{z} K_1^{(k-1)}(z) - K_0^{(k-1)}(z) - \frac{(k-1)}{z} K_0^{(k-2)}(z) . \tag{128}$$

To continue with preparations to compute the Taylor series, Eqs. (119) through (122), assume

$$I_0^{(k)}(z) = S_k(z) I_0(z) + T_k(z) I_1(z) . \tag{129}$$

For k = 0, 1, and 2, and using Eqs. (123) and (124), then

$$S_0(z) = 1 , \qquad T_0(z) = 0$$

$$S_1(z) = 0 , \qquad T_1(z) = 1$$

$$S_2(z) = 1 , \qquad T_2(z) = -\frac{1}{z} .$$

---

[11] M. Abramowitz and I. A. Stegun, Handbook of Mathematical Functions, National Bureau of Standards, 1965, p. 376, formulas (9.6.27 and 9.6.28).

To determine four-term recurrence relations for $S_k(z)$ and $T_k(z)$, substitute the expression in Eq. (129) with appropriate k-values into Eq. (127). First, use Eq. (123) to replace $I_1^{(k)}(z)$ by $I_0^{(k+1)}(z)$, and the result is

$$S_{k+1}(z)I_0(z) + T_{k+1}(z)I_1(z) = -\frac{k}{z}\left[S_k(z)I_0(z) + T_k(z)I_1(z)\right]$$

$$+ S_{k-1}(z)I_0(z) + T_{k-1}(z)I_1(z) + \frac{k-1}{z}\left[S_{k-2}(z)I_0(z) + T_{k-2}(z)I_1(z)\right]. \quad (130)$$

By equating the function coefficients corresponding to $I_0(z)$, and also $I_1(z)$, it is seen that $S_k(z)$ and $T_k(z)$ both satisfy the four-term recurrence relation

$$S_{k+1}(z) = -\frac{k}{z}\, S_k(z) + S_{k-1}(z) + \frac{(k-1)}{z}\, S_{k-2}(z) \ . \quad (131)$$

The same recurrence relations in Eq. (131) can be derived by using direct differentiation on Eq. (129).

The parallel procedure can be carried out to develop expressions $P_k(z)$ and $Q_k(z)$ so that

$$K_0^{(k)}(z) = P_k(z)\, K_0(z) + Q_k(z)\, K_1(z) \ . \quad (132)$$

In this case, using Eqs. (125) and (126),

$$P_0(z) = 1 \ , \qquad Q_0(z) = 0 \ ,$$

$$P_1(z) = 0 \ , \qquad Q_1(z) = -1 \ ,$$

and

$$P_2(z) = 1,, \qquad Q_2(z) = \frac{1}{z} \ .$$

Substitution of Eq. (132) into Eq. (128), using $K_1^{(k)}(z) = -K_0^{(k+1)}(z)$ from Eq. (125), yields four-term recurrence relations for both $P_k(z)$ and $Q_k(z)$:

$$P_{k+1}(z) = -\frac{k}{z}\, P_k(z) + P_{k+1}(z) + \frac{k-1}{z}\, P_{k-2}(z) \ . \quad (133)$$

From the initial conditions, we identify

$$P_k(z) = S_k(z) \text{ and } Q_k(z) = -T_k(z) .$$

Then Eq. (132) is replaced by

$$K_0^{(k)}(z) = S_k(z)\, K_0(z) - T_k(z)\, K_1(z) . \tag{134}$$

Further, by Eqs. (125) and (123),

$$K_1^{(k)}(z) = -K_0^{(k+1)}(z) = -S_{k+1}(z)\, K_0(z) + T_{k+1}(z)\, K_1(z)$$

and

$$I_1^{(k)}(z) = I_0^{(k+1)}(z) = S_{k+1}(z)\, I_0(z) + T_{k+1}(z)\, I_1(z) .$$

The expressions in Eqs. (119) through (122) in terms of the $S_k(z)$ and $T_k(z)$ are:

$$I_0(z+h) = \sum_{k=0}^{\infty} I_0^{(k)}(z)\frac{h^k}{k!} = I_0(z) \sum_{k=0}^{\infty} S_k(z)\frac{h^k}{k!} + I_1(z) \sum_{k=0}^{\infty} T_k(z)\frac{h^k}{k!} , \tag{135}$$

$$I_1(z+h) = \sum_{k=0}^{\infty} I_1^{(k)}(z)\frac{h^k}{k!} = I_0(z) \sum_{k=0}^{\infty} S_{k+1}(z)\frac{h^k}{k!} + I_1(z) \sum_{k=0}^{\infty} T_{k+1}(z)\frac{h^k}{k!} , \tag{136}$$

$$K_0(z+h) = \sum_{k=0}^{\infty} K_0^{(k)}(z)\frac{h^k}{k!} = K_0(z) \sum_{k=0}^{\infty} S_k(z)\frac{h^k}{k!} - K_1(z) \sum_{k=0}^{\infty} T_k(z)\frac{h^k}{k!} , \tag{137}$$

$$K_1(z+h) = \sum_{k=0}^{\infty} K_1^{(k)}(z)\frac{h^k}{k!} = -K_0(z) \sum_{k=0}^{\infty} S_{k+1}(z)\frac{h^k}{k!} + K_1(z) \sum_{k=0}^{\infty} T_{k+1}(z)\frac{h^k}{k!} . \tag{138}$$

The $G_1(z,h)$ function then becomes, using Eqs. (135) through (138),

$$G_1(z,h) = z\Big[K_0(z)\, I_0(z) \sum_{k=0}^{\infty} \frac{S_{k+1}(z)h^k}{k!} + K_0(z) I_1(z) \sum_{k=0}^{\infty} \frac{T_{k+1}(z)h^k}{k!}$$

$$+ I_0(z)\, K_1(z) \sum_{k=0}^{\infty} \frac{T_{k+1}(z)h^k}{k!} - I_0(z)\, K_0(z) \sum_{k=0}^{\infty} \frac{S_{k+1}(z)h^k}{k!}\Big]$$

$$= z\Big[K_0(z)\, I_1(z) + I_0(z)\, K_1(z)\Big] \sum_{k=0}^{\infty} \frac{T_{k+1}(z)h^k}{k!} \tag{139}$$

$$G_1(z,h) = \sum_{k=0}^{\infty} \frac{T_{k+1}(z)h^k}{k!} \tag{140}$$

since the expression in the square brackets, the coefficient of the sum is the Wronskian of the modified Bessel functions. Similarly, we find

$$G_2(z,h) = (z+h) \sum_{k=0}^{\infty} \frac{T_k(z)h^k}{k!} \quad , \tag{141}$$

$$G_3(z,h) = \frac{1}{z} \sum_{k=0}^{\infty} \frac{S_{k+1}(z)h^k}{k!} \quad , \text{ and} \tag{142}$$

$$G_4(z,h) = \frac{z+h}{z} \sum_{k=0}^{\infty} \frac{S_k(z)h^k}{k!} \quad . \tag{143}$$

Note that $\frac{z+h}{z} = \frac{\alpha_n r_n}{\alpha_n r_{n-1}} = \frac{r_n}{r_{n-1}}$, which is real.

These computations are performed in GCALC, making use of the four-term recurrence relations derived for $S_k(z)$ and $T_k(z)$.

A listing of GCALC follows.

```
      SUBROUTINE GCALC(A,B,N,BIGG)
      IMPLICIT REAL*8 (A-H,O-Z)
      COMMON/REGION/R(10),FM(10),PERM(10),KLIM
      DIMENSION BIGG(8)
      X=A*R(N-1)
      Y=B*R(N-1)
      T=R(N)-R(N-1)
      XI=T*A
      XPXI=XI+X
      ETA=T*B
      YPET=ETA+Y
      HOZ=T/R(N-1)
      BIGG(1)=1.D0-HOZ
      BIGG(7)=1.D0
      BIGG(3)=XI
      BIGG(5)=BIGG(3)
      BIGG(4)=ETA
      BIGG(6)=BIGG(4)
      BIGG(2)=0.D0
      BIGG(8)=0.D0
      XK=2.D0
      HKORE=.5D0*(XI-ETA)*(XI+ETA)
      HKOIM=XI*ETA
      T=Y/X
      U=1.D0/(T*Y+X)
      V=-U*T
      FMMIM=V
      TIM=-FMMIM
      FMMRE=U
      TRE=-FMMRE
      SM2RE=1.D0
      SRE=1.D0
      TM1RE=1.D0
      SM2IM=0.D0
      SM1RE=0.D0
      SM1IM=0.D0
      SIM=0.D0
      TM2RE=0.D0
      TM2IM=0.D0
      TM1IM=0.D0
C
C        BEGIN LOOP ON K
C
      DO 140 K=1,30
      TO=0.D0
      T=TRE*HKORE-TIM*HKOIM
      IF(BIGG(3).EQ.0.D0)GO TO 100
      TO=TO+DABS(T/BIGG(3))
  100 BIGG(3)=BIGG(3)+T
      T=TRE*HKOIM+TIM*HKORE
      IF(BIGG(4).EQ.0.D0) GO TO 105
      TO=TO+DABS(T/BIGG(4))
  105 BIGG(4)=BIGG(4)+T
      T=SRE*HKORE-SIM*HKOIM
      IF(BIGG(7).EQ.0.D0)GO TO 110
      TO=TO+DABS(T/BIGG(7))
  110 BIGG(7)=BIGG(7)+T
```

```
      T=SRE*HKØIM+SIM*HKØRE
      IF(BIGG(8).EQ.0.D0)GØ TØ 115
      TQ=TQ+DABS(T/BIGG(8))
  115 BIGG(8)=BIGG(8)+T
      FMRE=FMMRE+U
      FMIM=FMMIM+V
      SPRE=FMMRE*SM2RE-FMMIM*SM2IM+SM1RE+FMIM*SIM-FMRE*SRE
      SPIM=FMMRE*SM2IM+FMMIM*SM2RE+SM1IM-FMIM*SRE-FMRE*SIM
      TPRE=FMMRE*TM2RE-FMMIM*TM2IM+TM1RE+FMIM*TIM-FMRE*TRE
      TPIM=FMMRE*TM2IM+FMMIM*TM2RE+TM1IM-FMIM*TRE-FMRE*TIM
      T=TPRE*HKØRE-TPIM*HKØIM
      IF(BIGG(1).EQ.0.D0)GØ TØ 120
      TQ=TQ+DABS(T/BIGG(1))
  120 BIGG(1)=BIGG(1)+T
      T=TPRE*HKØIM+TPIM*HKØRE
      IF(BIGG(2).EQ.0.D0)GØ TØ 125
      TQ=TQ+DABS(T/BIGG(2))
  125 BIGG(2)=BIGG(2)+T
      T=SPRE*HKØRE-SPIM*HKØIM
      IF(BIGG(5).EQ.0.D0)GØ TØ 130
      TQ=TQ+DABS(T/BIGG(5))
  130 BIGG(5)=BIGG(5)+T
      T=SPRE*HKØIM+SPIM*HKØRE
      IF(BIGG(6).EQ.0.D0)GØ TØ 135
      TQ=TQ+DABS(T/BIGG(6))
  135 BIGG(6)=BIGG(6)+T
C
C        TEST CØNVERGENCE
C
      IF(TQ.LT.1.D-11)GØ TØ 145
C
C        UPDATE FØR NEXT PASS
C
      FMMRE=FMRE
      FMMIM=FMIM
      SM2RE=SM1RE
      SM1RE=SRE
      SRE=SPRE
      SM2IM=SM1IM
      SM1IM=SIM
      SIM=SPIM
      TM2RE=TM1RE
      TM1RE=TRE
      TRE=TPRE
      TM2IM=TM1IM
      TM1IM=TIM
      TIM=TPIM
      XK=XK+1.D0
      T=(HKØRE*XI-HKØIM*ETA)/XK
      HKØIM=(HKØRE*ETA+HKØIM*XI)/XK
      HKØRE=T
  140 CØNTINUE
C
C        NØN-CØNVERGENCE ALARM
C
      PRINT 1,TQ
    1 FØRMAT('1 GCALC NØT CØNVERGED AFTER 30 TERMS-TQ='1PD20.9)
```

```
C
C          MULTIPLY BY APPROPRIATE FACTORS
C
 145  CONTINUE
      T=BIGG(3)*XPXI-BIGG(4)*YPET
      BIGG(4)=BIGG(3)*YPET+BIGG(4)*XPXI
      BIGG(3)=T
      T=BIGG(5)*U-BIGG(6)*V
      BIGG(6)=BIGG(5)*V+BIGG(6)*U
      BIGG(5)=T
      T=1.D0+H0Z
      BIGG(7)=T*BIGG(7)
      BIGG(8)=BIGG(8)*T
      RETURN
      END
```

II. B(3b) MODBES

The MODBES subroutine is used for real argument x to obtain the modified Bessel functions $I_0(x)$, $I_1(x)$, $K_0(x)$, and $K_1(x)$. Rational function approximations[12] are used to give $K_0(x)$ and $K_1(x)$ for all values of x. Similar rational function approximations[12] are used for $I_0(x)$ and $I_1(x)$, when x is not greater than 1.

If x is greater than 1, $I_0(x)$ and $I_1(x)$ are calculated by a backward recursion system of Clenshaw,[13] which uses Chebyshev polynomials.

The accuracy of MODBES using the 360 computer and double precision arithmetic is at least 15 decimal digits, as checked against the 60S tables of Berger and McAllister (unpublished).[14]

A listing of MODBES follows.

---

[12] A. E. Russon and J. M. Blair, Rational Function Minimax Approximations for the Bessel Functions $K_0(x)$ and $K_1(x)$, AECL-3461, pp. 19-45 (October 1969).

[13] Y. L. Luke, Mathematics in Science and Engineering, Vol. 1, pp. 327-29, Vol. 2, pp. 338-341, Academic, New York, 1969.

[14] B. S. Berger and H. McAllister, A Table of the Modified Bessel Functions, University of Maryland, College Park, Md.

```
      SUBROUTINE MODBES(X,BIO,BKO,BI1,BK1)
C
C        EVALUATES THE ZERO-TH AND FIRST-ORDER MODIFIED BESSEL
C        FUNCTIONS IO(X), I1(X), KO(X) AND K1(X), USING RATIONAL
C        FUNCTION APPROXIMATIONS GIVEN BY A. E. RUSSON AND J. M. PLAIR,

C        AECL-3461, OCT. 1969.
C

      IMPLICIT REAL*8 (A-H, O-Z)
C
      DIMENSION ANIO(15), CNIO(22), BNI1(15), DNI1(22)
      DATA ANIO / 127.73343 98121 811          D 00,
     1            190.49432 01727 428          D 00,
     2             82.48903 27440 241          D 00,
     3             22.27481 92424 6223         D 00,
     4              4.01167 37601 79349        D 00,
     5              0.50949 33654 39982 9      D 00,
     6               0.4771 87487 98174 14     D-01,
     7                0.341 63317 66012 341    D-02,
     8                 0.19 24693 59688 1137   D-03,
     9                   0. 87383 15496 62236D-05,
     9                    0 .3260 91050 57896D-06,
     9                      0.101 69726 72769D-07,
     9                        0.2 68828 12895D-09,
     9                          0 .6096 89280D-11,
     9                            0.119 89083D-12 /
      DATA CNIO /    1.00827 92054 58740       D 00,
     1                0.844 51226 24920 943   D-02,
     2                 0.17 27006 30777 5665  D-03,
     3                   0. 72475 91099 95896D-05,
     4                    0 .5135 87726 87802D-06,
     5                      0.568 16965 80812D-07,
     6                       0.85 13091 22285D-08,
     7                       0.12 38425 36400D-08,
     8                         0. 29801 67230D-10,
     9                        -0. 78956 69832D-10,
     9                        -0. 33127 12763D-10,
     9                         -0 .4497 33864D-11,
     9                          0 .1799 79030D-11,
     9                            0.965 74832D-12,
     9                             0.38 60424D-13,
     9                          - 0.104 03934D-12,
     9                            -0.23 95045D-13,
     9                              0.9 55447D-14,
     9                              0.4 44315D-14,-0.85864D-15,
     9                              -0. 70878D-15,0.8676D-16/
      DATA BNI1 / 129.94511 89032 386          D 00,
     1            181.31261 60405 703          D 00,
     2             69.39591 76337 3445         D 00,
     3             16.33455 05525 2207         D 00,
     4              2.57145 99063 47755        D 00,
     5              0.28785 55118 04672 0      D 00,
     6               0.2399 30791 47840 55     D-01,
     7                0.154 30190 15627 219    D-02,
     8                  0.7 87567 85754 16515D-04,
     9                   0. 32641 38122 30986D-05,
     9                    0 .1119 46284 56389D-06,
```

```
     9                          0.32 27616 52023D-08,
     9                            0. 79290 55929D-10,
     9                             0 .1678 97282D-11,
     9                                0.30 95296D-13 /
      DATA DNI1 /    0.97580 06023 26285 9     D 00,
     1              -0.2446 74429 63276 38    D-01,
     2                -0.27 72053 60763 8289 D-03,
     3                  -0. 97321 46728 02013D-05,
     4                   -0 .6297 24238 63981D-06,
     5                    - 0.659 61142 15424D-07,
     6                      -0.96 13872 91942D-08,
     7                      -0.14 01140 90103D-08,
     8                        -0. 47563 16654D-10,
     9                         0. 81530 68107D-10,
     9                         0. 35408 14832D-10,
     9                          0 .5102 56407D-11,
     9                         -0 .1804 40934D-11,
     9                         -0 .1023 59447D-11,
     9                            -0.52 67784D-13,
     9                           0.107 09419D-12,
     9                            0.26 11976D-13,
     9                            -0.9 56129D-14,
     9                            -0.4 71335D-14,0.82924D-15,
     9                              0. 74262D-15,-0.8045D-16/
C
C        ANIO AND CNIO ARE CHEBYSHEV COEFFICIENTS FOR IO(X) TAKEN FROM
C        TABLE 29, THE SPECIAL FUNCTIONS AND THEIR APPROXIMATIONS,
C        VOL. 2, BY Y.L. LUKE, PP. 338-339.
C        BNI1 AD DNI1 ARE SAME FOR I1(X), TABLE 30, PP. 340-341.
C
      DATA C / 0.39894 22804 01432 7D 00/
C
      IF(X.GT.1.D0) GO TO 100
      XLOG=DLOG(X)
      T=X**2
C
C        APPROX. 72 FOR IO (PG. 28, AECL-3461)
C
      Q= ((T-2.5064972445877 99D2)*T+2.986571316305403D4)*T
     1 -1.612813630445819D6
      P=(((-1.6414452837299 06D0*T-2.950165789295884D2)*T
     1 -1.798443440941177D4)*T-3.7333769444840 08D5)*T
     2 -1.612813630445819D6
      BIO=P/Q
C
C        APPROX. 91 FOR I1 (PG. 31, AECL-3461)
C
      Q=((T-1.969144862829399D2)*T+1.914147162749989D4)*T
     1 -8.673265095976894D5
      P=((-9.0150478225485 45D0*T-1.160778051817119D3)*T
     1 -4.463717103610666D4)*T-4.336632547988447D5
      BI1=P*X/Q
C
C        APPROX. 28 FOR KO(X) + LN(X) * IO(X)  (PG. 19, AECL-3461)
C
```

```
      Q=((T-2.286835794674987D2)*T+2.532571801733452D4)*T
     1 -1.287566524373463D6
      P=(((-3.272279992574784D0*T-5.135620533725094D2)*T
     1 -2.547074686782375D4)*T-3.562729668888909D5)*T
     2 -1.492695386816498D5
      BK0=P/Q-XLOG*BI0
C
C        APPROX. 50 FOR (1/X)(K1(X)-LN(X)I1(X)-1/X)   (PG. 23, AECL-3461)

C
      Q=((T-2.814391575453873D2)*T+3.726429867206770D4)*T
     1 -2.214937487824330D6
      P=(((4.812707045687844D-1*T+9.999137356742931D1)*T
     1 +7.187538260408480D3)*T+1.776146795090155D5)*T
     2 +6.821249019821382D5
      BK1=X*P/Q+1.D0/X+XLOG*BI1
      RETURN
C
C        X.GT.1
C
 100  EXPX=DEXP(X)
      SQRX=DSQRT(X)
      D=EXPX*SQRX
      T=1.D0/X
C
C        APPROX. 113 FOR EXP(X)*SQRT(X)*K0(X)   (PG. 37, AECL-3461)
C
      Q=(((((((((T+1.723547893760824D2)*T+3.220845810178108D3)*T
     1 +1.893736743618128D4)*T+4.746183671148535D4)*T
     2 +5.801727020869990D4)*T+3.667051460217709D4)*T
     3 +1.201760312809182D4)*T+1.906135146578901D3)*T
     4 +1.139205640609552D2
      P=(((((((1.030259990294628D2*T+2.781556951284448D3)*T
     1 +1.927380098600572D4)*T+5.275923966621326D4)*T
     2 +6.786897902962336D4)*T+4.423446358185698D4)*T
     3 +1.477324772717615D4)*T+2.371138845157721D3)*T
     4 +1.427782534685513D2
      BK0=P/(Q*D)
C
C        APPROX. 136 FOR EXP(X)*SQRT(X)*K1(X)   (PG. 45, AECL-3461)
C
      Q=(((((((T+3.017103765395105D1)*T+2.281150283978967D2)*T
     1 +6.730124200199513D2)*T+9.246057876003073D2)*T
     2 +6.385720888284594D2)*T+2.244322524683622D2)*T
     3 +3.767671736737387D1)*T+2.360279592776385D0
      P=(((((((((6.982646013142394D-2*T+6.943429490437559D0)*T
     1 +1.016245135256770D2)*T+5.190226276746314D2)*T
     2 +1.207119908800295D3)*T+1.430398225341416D3)*T
     3 +9.005826147591565D2)*T+2.986452400790679D2)*T
     4 +4.833007694228656D1)*T+2.958171781643915D0
      BK1=P/(Q*D)
C
C        APPROXIMATIONS FOR EXP(-X)*SQRT(X)*I0(X) AND
C
C
C        APPROXIMATE I0(X) AND I1(X) FOR X.GT.1
C        USING CHEBYSHEV POLYNOMIALS AND BACKWARD RECURSION SYSTEM
C        OF CLENSHAW, LUKE, VOL. 1, PP. 327-329.
```

```
C
      IF (X.GT.8.D0) GØ TØ 115
C
C        CALCULATE IØ(X) AND I1(X) USING T2N(X/8)
C        FØR 1.LT.X.LE.8
C
      XØVER8 = X/8.D0
      TP= XØVER8**2
      S = TP + TP - 1.0D0
      ALFK = - S - S
      K = 15
      BKP1IØ = 0.D0
      BKP2IØ = 0.D0
      BKP1I1 = 0.D0
      BKP2I1 = 0.D0
 105  BKIØ = -ALFK*BKP1IØ - BKP2IØ + ANIØ(K)
      BKI1 = -ALFK*BKP1I1 - BKP2I1 + BNI1(K)
      IF(K.LE.1) GØ TØ 110
      K = K-1
      BKP2IØ = BKP1IØ
      BKP1IØ = BKIØ
      BKP2I1 = BKP1I1
      BKP1I1 = BKI1
      GØ TØ 105
 110  CØNTINUE
      BIØ = BKIØ - S*BKP1IØ
      BI1 = XØVER8*(BKI1 - S*BKP1I1)
      GØ TØ 130
C
C        CALCULATE IØ(X) AND I1(X) FØR X.GT.8 USING TN(8/X)
C
 115  CØNTINUE
      EØVERX = 8.D0/X
      S = EØVERX + EØVERX - 1.D0
      ALFK = - S - S
      K = 22
      BKP1IØ = 0.D0
      BKP2IØ = 0.D0
      BKP1I1 = 0.D0
      BKP2I1 = 0.D0
 120  BKIØ = -ALFK*BKP1IØ - BKP2IØ + CNIØ(K)
      BKI1 = -ALFK*BKP1I1 - BKP2I1 + DNI1(K)
      IF(K.LE.1) GØ TØ 125
      K = K-1
      BKP2IØ = BKP1IØ
      BKP1IØ = BKIØ
      BKP2I1 = BKP1I1
      BKP1I1 = BKI1
      GØ TØ 120
 125  CØNTINUE
      D = EXPX*C/SQRX
      BIØ = BKIØ - S*BKP1IØ
      BIØ = BIØ*D
      BI1 = BKI1 - S*BKP1I1
      BI1 = BI1*D
C
 130  CØNTINUE
      RETURN
      END
```

II. B(3c) CMDBES

The CMDBES subroutine is used for complex argument, $z = x+iy$. Let $R = \sqrt{x^2 + y^2}$ be the absolute value of z. For R less than or equal to 8, $K_0(z)$ and $K_1(z)$ are computed by a rational approximation method. This is done by a subroutine named COMKB. In the same range of R, $I_0(z)$ and $I_1(z)$ are calculated by backward recurrence in a subroutine named CMI. Asymptotic series in CMDBES are used for R greater than 8 to obtain approximations of $I_0(z)$, $K_0(z)$, $I_1(z)$, and $K_1(z)$. Accuracy is at least 10 significant digits for these functions of a complex argument z, checking against tables for the Kelvin functions[11] (p. 379 and pp. 430-31), and also checking against approximate values in ORNL-TM-3295.[9]

Following is a listing of CMDBES.

```
      SUBRØUTINE CMDBES(X,Y,F)
      IMPLICIT REAL*8 (A-H, Ø-Z)
C
C         CØMPUTES F(1) + J * F(2) = Z * IO(Z)
C                  F(3) + J * F(4) = Z * KO(Z)
C                  F(5) + J * F(6) = I1(Z)
C                  F(7) + J * F(8) = K1(Z)
C         ØF THE CØMPLEX ARGUMENT Z = X + J * Y
C
      DIMENSIØN F(8)
      R=DSØRT(X*X+Y*Y)
      C1=X/R
      S1=Y/R
      PHI=DATAN(S1/C1)
      IF(R.GT.8.DO) GØ TØ 100
C
C        FØR R.LE.8 USE RATIØNAL APPRØXIMATIØN FØR KO(Z) AND K1(Z)
C        AND BACKWARD RECURRENCE  FØR IO(Z) AND I1(Z)
C
      CALL CØMKB(X,Y,BKZR,BKZI,BKØR,BKØI)
      F(3)=BKZR
      F(4)=BKZI
      F(7)=BKØR
      F(8)=BKØI
      CALL CMI(X,Y,BIZR,BIZI,BIØR,BIØI)
      F(1)=BIZR
      F(2)=BIZI
      F(5)=BIØR
      F(6)=BIØI
      GØ TØ 125
C
C         ASYMPTØTIC SERIES FØR R.GT.8
C
  100 DØ 105 I=2,8,2
      F(I-1)=1.DO
  105 F(I)=0.DO
      ØDD=1.DO
      T=1.DO
      U=1.DO
      P=1.DO
      SIGN=-1.DO
      V=.125DO/R
      C=C1
      S=S1
      L5=3+IDINT(20.DO/R)
      DØ 110 N=1,L5
      S6=-ØDD*ØDD
      S7=V/P
      T=S7*S6*T
      U=U*(4.DO+S6)*S7
      T1=C*T
      F(1)=T1*SIGN+F(1)
      F(3)=T1+F(3)
      T1=-S*T
      F(2)=T1*SIGN+F(2)
      F(4)=T1+F(4)
      T1=C*U
```

```
      F(5)=T1*SIGN+F(5)
      F(7)=T1+F(7)
      T1=-S*L
      F(6)=T1*SIGN+F(6)
      F(8)=T1+F(8)
      SIGN=-SIGN
      P=P+1.D0
      CDD=CDD+2.D0
      C2=C*C1-S*S1
      S=S*C1+C*S1
      C=C2
 110  CONTINUE
      S6=DEXP(X)
      S7=1.D0/S6
      T1=DSQRT(X)
      S6=.39894 22804 01432 7D0*S6/T1
      S7=1.2533 14137 3155D0*S7/T1
C
C        THE ABOVE FACTORS ARE 1/SQRT(2*PI) AND SQRT(PI/2)
C
      ARG=.5D0*PHI
      C=DCOS(ARG)
      S=DSIN(ARG)
C
C       MULTIPLY BY COS(PHI/2) - J * SIN(PHI/2) FROM 1/SQRT(Z)
C
      DO 115 N=2,8,2
      T=F(N-1)*C+F(N)*S
      F(N)=F(N)*C-F(N-1)*S
      F(N-1)=T
 115  CONTINUE
      C=DCOS(Y)
      S=DSIN(Y)
C
C          MULTIPLY I FNS. BY S6*EXP(J*Y) AND K FNS. BY S7*EXP(-J*Y)
C
      DO 120 N=1,5,4
      T=F(N)*C-F(N+1)*S
      F(N+1)=S6*(F(N+1)*C+F(N)*S)
      F(N)=T*S6
      T=F(N+2)*C+F(N+3)*S
      F(N+3)=S7*(F(N+3)*C-F(N+2)*S)
      F(N+2)=T*S7
 120  CONTINUE
C
C          MULTIPLY ZERO-ORDER FUNCTIONS BY Z
C
 125  T=X*F(1)-Y*F(2)
      F(2)=F(1)*Y+F(2)*X
      F(1)=T
      T=X*F(3)-Y*F(4)
      F(4)=F(3)*Y+F(4)*X
      F(3)=T
      RETURN
      END
```

II. B(3ci) COMKB

The COMKB subroutine is used to obtain the modified Bessel functions, $K_0(z)$ and $K_1(z)$, for complex independent variable $z = x+iy$. The absolute value of z must not be greater than 8 to insure that the rational approximation[15] method is successful.

A listing of the COMKB subroutine follows.

---

[15] Y. L. Luke, "The Special Functions and Their Approximations," p. 229 in Mathematics in Science and Engineering, Vol. 2, Academic, New York, 1969.

```
      SUBRØUTINE CØMKB( X, Y, BKZR, BKZI, BKØR, BKØI )
      IMPLICIT REAL*8 (A-H, Ø-Z)
C
C        CØMPUTES THE REAL & IMAGINARY PARTS ØF THE MØDIFIED
C        BESSEL FUNCTIØNS KØ(Z) & K1(Z), WHERE Z = X + I*Y,
C        BY THE METHØD ØF Y.L. LUKE, THE SPECIAL FUNCTIØNS
C        AND THEIR APPRØXIMATIØNS, VØL.2, PG. 229.
C
      DIMENSIØN P1ZE(16), P2ZE(16), P3ZE(16), Q1ZE(16)
      DIMENSIØN P1ØN(16), P2ØN(16), P3ØN(16), Q1ØN(16)
      DATA P1ZE /3*0.D0
     1          ,-1.59863945578D 00,-1.91851851852D 00,-2.11452184179D 00
     2          ,-2.24917817226D 00,-2.34787878788D 00,-2.42347617780D 00
     3          ,-2.48328716528D 00,-2.53181272509D 00,-2.57198288727D 00
     4          ,-2.60579047619D 00,-2.63463947039D 00,-2.65954815696D 00
     5          ,-2.68127336494D 00/
      DATA P2ZE /3*0.D0
     1          , 6.32653061224D-01, 1.07407407407D 00, 1.38016528926D 00
     2          , 1.60355029586D 00, 1.77333333333D 00, 1.90657439446D 00
     3          , 2.01385041551D 00, 2.10204081633D 00, 2.17580340265D 00
     4          , 2.23840000000D 00, 2.29218106996D 00, 2.33888228300D 00
     5          , 2.37981269511D 00/
      DATA P3ZE /3*0.D0
     1          ,-3.40136054422D-02,-1.55555555556D-01,-2.65643447462D-01
     2          ,-3.54372123603D-01,-4.25454545455D-01,-4.83098216662D-01
     3          ,-5.30563250231D-01,-5.70228091236D-01,-6.03820515372D-01
     4          ,-6.32609523810D-01,-6.57541599571D-01,-6.79334126040D-01
     5          ,-6.98539330173D-01/
      DATA Q1ZE /3*0.D0
     1          , 1.63265306122D 00, 1.38271604938D 00, 1.19008264463D 00
     2          , 1.04142011834D 00, 9.24444444444D-01, 8.30449826990D-01
     3          , 7.53462603878D-01, 6.89342403628D-01, 6.35160680529D-01
     4          , 5.88800000000D-01, 5.48696844993D-01, 5.13674197384D-01
     5          , 4.82830385016D-01/
      DATA P1ØN /3*0.D0
     1          ,-1.88888888889D 00,-2.09090909091D 00,-2.23076923077D 00
     2          ,-2.33333333333D 00,-2.41176470588D 00,-2.47368421053D 00
     3          ,-2.52380952381D 00,-2.56521739130D 00,-2.60000000000D 00
     4          ,-2.62962962963D 00,-2.65517241379D 00,-2.67741935484D 00
     5          ,-2.69696969697D 00/
      DATA P2ØN /3*0.D0
     1          , 7.77777777778D-01, 1.18181818182D 00, 1.46153846154D 00
     2          , 1.66666666667D 00, 1.82352941176D 00, 1.94736842105D 00
     3          , 2.04761904762D 00, 2.13043478261D 00, 2.20000000000D 00
     4          , 2.25925925926D 00, 2.31034482759D 00, 2.35483870968D 00
     5          , 2.39393939394D 00/
      DATA P3ØN /3*0.D0
     1          , 1.11111111111D-01,-9.09090909091D-02,-2.30769230769D-01
     2          ,-3.33333333333D-01,-4.11764705882D-01,-4.73684210526D-01
     3          ,-5.23809523810D-01,-5.65217391304D-01,-6.00000000000D-01
     4          ,-6.29629629630D-01,-6.55172413793D-01,-6.77419354839D-01
     5          ,-6.96969696970D-01/
      DATA Q1ØN /3*0.D0
     1          , 1.77777777778D 00, 1.45454545455D 00, 1.23076923077D 00
     2          , 1.06666666667D 00, 9.41176470588D-01, 8.42105263158D-01
     3          , 7.61904761905D-01, 6.95652173913D-01, 6.40000000000D-01
     4          , 5.92592592593D-01, 5.51724137931D-01, 5.16129032258D-01
     5          , 4.84848484848D-01/
```

```
      DATA C/1.25331413731550 00/
      DIMENSIØN RTEST(5), NTEST(5)
      DATA RTEST/ 1.D0, 4.D0, 16.D0, 36.D0, 64.D0/
      DATA NTEST/ 15, 10, 10, 6, 6/
C
C        FIND NTERM, THE NUMBER ØF TERMS
C        WE ASSUME THE ARGUMENT HAS BEEN CHECKED TØ INSURE THAT R.LE.8
C
      RSQ = X**2 + Y**2
      DØ 100 I = 2, 5
      IT = I - 1
      IF(RSQ .LT. RTEST(I) ) GØ TØ 105
 100  CØNTINUE
 105  NTERM = NTEST(IT)
C
C        INITIALIZE FK-1, FK-2, AND FK-3 FØR N=0 AND N=1
C
      FKM3RZ = 1.D0
      FKM3RØ = 1.D0
      PKM3RZ = 1.D0
      PKM3RØ = 1.D0
      FKM3IZ = 0.D0
      FKM3IØ = 0.D0
      PKM3IZ = 0.D0
      PKM3IØ = 0.D0
      HX = X*16.D0
      FKM2RZ = (HX + 9.D0)/9.D0
      PKM2RZ = (HX + 7.D0)/9.D0
      FX = X* 3.2D0
      FKM2RØ = FX + 1.D0
      PKM2RØ = FKM2RØ + 1.2D0
      FKM2IØ = Y*3.2D0
      PKM2IØ = FKM2IØ
      HY = Y* 16.D0
      FKM2IZ = HY/9.D0
      PKM2IZ = FKM2IZ
      HYS = HY**2
      T = HX + 25.D0
      FKM1RZ = (HX*T + 75.D0 - HYS)/75.D0
      FKM1IZ = HY*(HX + T)/75.D0
      T = HX + 23.D0
      PKM1RZ = (HX*T + 43.D0 - HYS)/75.D0
      PKM1IZ = HY*(HX + T)/75.D0
      T = HX + 21.D0
      FKM1RØ = (HX*T + 35.D0 - HYS)/35.D0
      FKM1IØ = HY*(HX + T)/35.D0
      T = HX + 27.D0
      PKM1RØ = (HX*T + 131.D0 - HYS)/35.D0
      PKM1IØ = HY*(HX + T)/35.D0
C
C        BEGIN RECURRENCE
C
      DØ 110 K = 3, NTERM
      KP1 = K + 1
C
C        CALCULATIØNS ØF FKRZ, FKIZ, PKRZ, AND PKIZ FØR N = 0
C
```

```
      P1 = P1ZE(KP1)
      P2 = P2ZE(KP1)
      P3 = P3ZE(KP1)
      Q1 = Q1ZE(KP1)
      HX = Q1*X
      HY = Q1*Y
      T1 = FKM1RZ + FKM2RZ
      T2 = FKM1IZ + FKM2IZ
      FKRZ = HX*T1 - P1*FKM1RZ - P2*FKM2RZ - HY*T2 - P3*FKM3RZ
      FKIZ = HX*T2 - P1*FKM1IZ - P2*FKM2IZ + HY*T1 - P3*FKM3IZ
      FKM3RZ = FKM2RZ
      FKM2RZ = FKM1RZ
      FKM1RZ = FKRZ
      FKM3IZ = FKM2IZ
      FKM2IZ = FKM1IZ
      FKM1IZ = FKIZ
      T1 = PKM1RZ + PKM2RZ
      T2 = PKM1IZ + PKM2IZ
      PKRZ = HX*T1 - P1*PKM1RZ - P2*PKM2RZ - HY*T2 - P3*PKM3RZ
      PKIZ = HX*T2 - P1*PKM1IZ - P2*PKM2IZ + HY*T1 - P3*PKM3IZ
      PKM3RZ = PKM2RZ
      PKM2RZ = PKM1RZ
      PKM1RZ = PKRZ
      PKM3IZ = PKM2IZ
      PKM2IZ = PKM1IZ
      PKM1IZ = PKIZ
C
C        CALCULATIØNS ØF FKRØ, FKIØ, PKRØ, AND PKIØ FØR N = 1
C
      P1 = P1ØN(KP1)
      P2 = P2ØN(KP1)
      P3 = P3ØN(KP1)
      Q1 = Q1ØN(KP1)
      HX = Q1*X
      HY = Q1*Y
      T1 = FKM1RØ + FKM2RØ
      T2 = FKM1IØ + FKM2IØ
      FKRØ = HX*T1 - P1*FKM1RØ - P2*FKM2RØ - HY*T2 - P3*FKM3RØ
      FKIØ = HX*T2 - P1*FKM1IØ - P2*FKM2IØ + HY*T1 - P3*FKM3IØ
      FKM3RØ = FKM2RØ
      FKM2RØ = FKM1RØ
      FKM1RØ = FKRØ
      FKM3IØ = FKM2IØ
      FKM2IØ = FKM1IØ
      FKM1IØ = FKIØ
      T1 = PKM1RØ + PKM2RØ
      T2 = PKM1IØ + PKM2IØ
      PKRØ = HX*T1 - P1*PKM1RØ - P2*PKM2RØ - HY*T2 - P3*PKM3RØ
      PKIØ = HX*T2 - P1*PKM1IØ - P2*PKM2IØ + HY*T1 - P3*PKM3IØ
      PKM3RØ = PKM2RØ
      PKM2RØ = PKM1RØ
      PKM1RØ = PKRØ
      PKM3IØ = PKM2IØ
      PKM2IØ = PKM1IØ
      PKM1IØ = PKIØ
  110 CØNTINUE
```

```
C
C         EVALUATE CØNSTANT TERM FØR KO(Z) AND K1(Z)
C         C IS SQUARE RØØT ØF PI/2
C
      X2 = -X
      EMX = DEXP(X2)
      D = DSQRT(RSQ)
      C2 = EMX*C/D
      SR = DCØS(Y)
      TI = - DSIN(Y)
      IF(Y.NE.0.D0) GØ TØ 120
      IF(X.GE.0.D0) GØ TØ 115
      HI = DSQRT(X2)
      GR = 0.D0
      GØ TØ 125
  115 GR = DSQRT(X)
      HI = 0.D0
      GØ TØ 125
  120 GR = DSQRT((X + D)/2.D0)
      HI = DSQRT((X2 + D)/2.D0)
      IF(Y.LT.0.D0)GØ TØ 125
      HI=-HI
  125 AR = C2*(GR*SR - HI*TI)
      BI = C2*(HI*SR + GR*TI)
C
C         CALCULATE KO(Z) = BKZR + BKZI*I
C
      DEN = FKRZ**2 + FKIZ**2
      UR = (PKRZ*FKRZ + PKIZ*FKIZ)/DEN
      VI = (PKIZ*FKRZ - PKRZ*FKIZ)/DEN
      BKZR = AR*UR - BI*VI
      BKZI = BI*UR + AR*VI
C
C         CALCULATE K1(Z) = BKØR + BKØI*I
C
      DEN = FKRØ**2 + FKIØ**2
      UR = (PKRØ*FKRØ + PKIØ*FKIØ)/DEN
      VI = (PKIØ*FKRØ - PKRØ*FKIØ)/DEN
      BKØR = AR*UR - BI*VI
      BKØI = BI*UR + AR*VI
      RETURN
      END
```

II. B(3cii) CMI

The CMI subroutine is used to obtain the modified Bessel functions, $I_0(z)$ and $I_1(z)$, for a complex independent variable $z = x+iy$. A backward recurrence method is used, which is derived from the recurrence relations (9.6.26),[11] p. 376.

A listing of the CMI program follows.

```
      SUBRØUTINE CMI(X,Y,BIZR,BIZI,BIØR,BIØI)
      IMPLICIT REAL*8 (A-H, Ø-Z)
C
C        CØMPUTES THE REAL AND IMAGINARY PARTS ØF THE MØDIFIED BESSEL
C        FUNCTIØNS ØF THE FIRST KIND, IØ(Z) AND I1(Z), Z = X + I*Y, BY
C        BACKWARD RECURRENCE
C
      DIMENSIØN FRE(52),FIM(52)
      DATA A,B/1.D-35,1.D-35/
C
C        CALCULATE N,THE NUMBER ØF TERMS
C
      R=DSØRT(X**2+Y**2)
      IF(R.LT.7.D0)GØ TØ 100
      N=30
      GØ TØ 130
 100  IF(R.LE.6.D0)GØ TØ 105
      ZN=5.D0*R-4.5D0
      GØ TØ 125
 105  IF(R.LT.3.D0)GØ TØ 110
      N=25
      GØ TØ 130
 110  IF(R.LE.2.D0)GØ TØ 115
      ZN=5.D0*R+10.5D0
      GØ TØ 125
 115  IF(R.LT.1.D0)GØ TØ 120
      N=20
      GØ TØ 130
 120  ZN=15.D0*R+5.5D0
 125  N=ZN
 130  CØNTINUE
C
C        CØMPUTE U AND V, REAL AND IMAG PARTS ØF 2/Z
C
      T=Y/X
      U=2.D0/(T*Y+X)
      V=-U*T
C
C        INITIALIZE
C
      FRE(N+2)=0.D0
      FIM(N+2)=0.D0
      SRE=A
      FRE(N+1)=A
      SIM=B
      FIM(N+1)=B
      XN=DFLØAT(N)
      TNUØZR=XN*U
      TNUØZI=XN*V
      NU=N+1
C
C        BACKWARD RECURRENCE
C
      DØ 135 K=1,N
      FRE(NU-1)=FRE(NU+1)+TNUØZR*FRE(NU)-TNUØZI*FIM(NU)
      SRE=FRE(NU-1)+SRE
```

```
      FIM(NU-1)=FIM(NU+1)+TNUØZR*FIM(NU)+TNUØZI*FRE(NU)
      SIM=FIM(NU-1)+SIM
      NU=NU-1
      TNUØZR=TNUØZR-U
      TNUØZI=TNUØZI-V
 135  CØNTINUE
C
C        ADJUST SUM
C
      SRE=SRE+SRE-FRE(1)
      SIM=SIM+SIM-FIM(1)
      T1=SIM/SRE
      U1=1.DØ/(T1*SIM+SRE)
      V1=-U1*T1
C
C        NORMALIZE
C
      EX=DEXP(X)
      SY=DSIN(Y)
      CY=DCØS(Y)
      FANRE=EX*(CY*U1-SY*V1)
      FANIM=EX*(CY*V1+SY*U1)
      BIZR=FANRE*FRE(1)-FANIM*FIM(1)
      BIZI=FANRE*FIM(1)+FANIM*FRE(1)
      BIØR=FANRE*FRE(2)-FANIM*FIM(2)
      BIØI=FANRE*FIM(2)+FANIM*FRE(2)
      RETURN
      END
```

III. EXECUTION OF INNMUL

A. TELINC.F4 Program

We shall give some comments and instructions for the execution of the INNMUL subroutine. It must be used on the IBM/360 computer because of the critical importance of the real*8 arithmetic.

The program may be submitted with data to the IMB/360 computer from a user's teletype via the PDP-10 computer. The results of the calculation may then be stored on the PDP-10 user's disk file to be printed on the user's teletype.

However, INNMUL and its subroutines are residing on a disk pack, which is a part of the Direct Access Storage of the IBM/360 computer. Therefore, the program may be submitted in any other convenient way to the 360, for example, by card job deck. One may also obtain the usual print-out from the high-speed printer.

When the INNMUL program and its DRIVER are submitted to the 360 computer for execution, the data which are to be processed must be included in a data file. This data file is read by the DRIVER program during execution on the 360, and must be in a certain required format, corresponding to card-columns.

The TELINC.F4 program was written for help to the user in preparing this data file at the teletype. It allows the user to give the data at the teletype in free form, rather than spaced out exactly to correct card-image format. The user types the data numbers, separated by commas, in response to the program as it executes interactively on the PDP-10. The TELINC.F4 program then creates the necessary data file in correct format and stores it on the user's disk. On the user's disk this data file is then ready to be submitted via the PDP-10 with the INNMUL program and its DRIVER to the IBM/360 for execution.

A listing of the TELINC.F4 program follows. The next section will be a description of data requirements.

```
C
C         PRØGRAM TØ PREPARE DATA FØR RUN ØN SUBRØUTINE INNMUL
C
C         IT IS PØSSIBLE TØ CØNTRØL PRINTØUT DURING USE ØF
C         THIS INTERACTIVE PRØGRAM BY CHØØSING '-1' AT THE FIRST
C         REQUEST FØR DATA FRØM THE TELETYPE. FURTHER, ØNE MAY
C         TYPE CØNTRØL '0' AT ANY TIME IF THE NEXT MØVE FRØM THE
C         TELETYPE IS ALREADY KNØWN BY THE PERSØN USING THE INTER-
C         ACTIVE PRØGRAM. IN ADDITIØN TØ THIS, IN VERIFYING PLAYED
C         BACK DATA, JUST A <CR> IS ENØUGH TØ ACCEPT IT AS ØK,
C         WITHØUT FIRST TYPING '1' AS THE INSTRUCTIØNS PRØVIDE.
C
C
C         PRØGRAM TØ RECEIVE FRØM TELETYPEWRITER DATA FØR NØRMALIZED
C         CØIL IMPEDANCE PRØGRAM IN FREE FØRMAT. DATA WILL BE PREPARED
C         IN ANØTHER FILE TØ BE READ IN FØRMAT BY PRØBLEM PRØGRAM.
C
      REAL*4 L,MU,MU2,L1
      DATA PI/3.1415 9265E0/,CØNST1/0.0254E0/
      DATA MU/4.0E-7/
      DIMENSIØN R(10),EM(10),PERM(10),RHØ(10)
      MU=MU*PI
      IFILE=1
      WRITE(IFILE,1)
 1    FØRMAT('//G0.FT50F001 DD *')
      TYPE 2
 2    FØRMAT('    PRØGRAM FØR CREATING DATA FILE ØN USER''S DISK'/
     1'    FØR USE ØF SUBRØUTINE INNMUL TØ CALCULATE CØIL IMPEDANCE(N)'
     2/'    FØR CASE ØF A CØIL INSIDE A TUBE ØF SEVERAL CØNDUCTØRS'//
     3'    FØR A MINIMUM ØF EXPLICIT INSTRUCTIØNS FØR TYPING IN DATA,'/
     4'    TYPE ''-1''; FØR MØRE EXPLICIT PRINTØUT TYPE ''1'''/
     5'    FØLLØW UP ALL TYPED DATA WITH CARRIAGE RETURN  <CR>'/ )
 3    FØRMAT('    IN ØRDER TØ VERIFY PLAYED BACK DATA,'/
     1'    TYPE ''1'' FØLLØWED BY <CR> EVERY TIME'/
     2'    ØR ''-1'' IF DATA NEEDS TØ BE RETYPED'/)
      ACCEPT 4, IMØRE
 4    FØRMAT(2I)
      TYPE 3
      IF(IMØRE.LT.0) GØ TØ 100
      TYPE 5
 5    FØRMAT( 20X,'NØRMALIZED CØIL IMPEDANCE PRØGRAM:'/
     1 16X,'CØIL INSIDE CØAXIAL CYLINDRICAL CØNDUCTØRS'//
     2 12X,'PLEASE TYPE IN THE DATA AS THEY WILL BE REQUESTED:'/14X,
     3 'THE VARIABLES TØ BE REQUIRED ARE FIRST DEFINED:'/)
      TYPE 6
 6    FØRMAT(
     1'   FIRST DATA IS READ FØR THE CØIL AND ITS DIMENSIØNS'/
     2'   IAIR.GT.0 MEANS AIR VALUE MUST BE GIVEN AS DATA'/
     3'   IAIR=0 IF AIR VALUE NØRMALIZATIØN FACTØR IS NØT GIVEN DATA'/
     4'   IAIR.LT.0 FØR THE END ØF ANY ADDITIØNAL CØILS - END ØF DATA'/
     5'   NØRMAL=1 MEANS THE CØIL DIMENSIØNS ARE GIVEN NØRMALIZED DATA'/
     6'   A9=AIR VALUE FACTØR FØR NØRMALIZATIØN ØF CØIL IMPEDANCE'/)
      TYPE 7
 7    FØRMAT('    DATA SHØULD BE TYPED WITH CØMMAS TØ SEPARATE NUMBERS'/)
      TYPE 3
 100  CØNTINUE
      NCØIL=0
```

```
105  TYPE 8
8    FØRMAT('  TYPE IN IAIR, NØRMAL'/)
     ACCEPT 4,IAIR,NØRMAL
     IF(IAIR.EQ.0) IAIR=1
     TYPE 9,IAIR,NØRMAL
9    FØRMAT('   IAIR ='I5,' NØRMAL ='I5/)
     IF(IMØRE.LT.0) GØ TØ 110
     TYPE 10
10   FØRMAT('   FØR VERIFICATIØN ØF DATA,TYPE ''1'' FØR Ø.K.'/
    1'   TYPE ''-1'' FØR DATA TØ BE REITYPED'/
    2'   DØ THE SAME PRØCESS FØR THE REST ØF THE DATA INPUT'/)
110  ACCEPT 4,IØK
     IF(IØK.LT.0) GØ TØ 105
     WRITE(IFILE,11) IAIR,NØRMAL
11   FØRMAT(4I5)
     IF(IAIR.LT.0)GØ TØ 230
     NCASE=0
115  TYPE 12
12   FØRMAT('   TYPE IN A9'/)
     ACCEPT 13,A9
13   FØRMAT(4E)
     TYPE 14,A9
14   FØRMAT('   A9 ='E15.8/)
     ACCEPT 4,IØK
     IF(IØK.LT.0) GØ TØ 115
     WRITE(IFILE,15) A9
15   FØRMAT(5D15.8)
     IF(IMØRE.LT.0) GØ TØ 120
     TYPE 16
16   FØRMAT('  NEXT DATA IS READ FØR THE CØIL GEØMETRY -'/
    1'  R1=INNER CØIL RADIUS (INCHES ØR NØRMALIZED)'/
    2'  R2=ØUTER CØIL RADIUS (INCHES ØR NØRMALIZED)'/
    3'  L=LENGTH ØF CØIL (INCHES ØR NØRMALIZED)'/
    4'  L1=DISTANCE FRØM BØTTØM ØF CØIL TØ Z=0 PLANE (INCHES ØR NØRM)'/
    5'  IF L1 IS NØT 0, THEN L IS DISTANCE FRØM TØP ØF CØIL TØ Z=0 '/
    6'  NØRMALIZATIØN ØF CØIL AND CØNDUCTØRS IS BY MEAN CØIL RADIUS'/)
120  NCØIL=NCØIL+1
125  TYPE 17
17   FØRMAT('   TYPE IN R1,R2,L,L1'/)
     ACCEPT 13,R1,R2,L,L1
     L=L-L1
     L1=0.D0
     ØR1=R1
     ØR2=R2
     ØL=L
     TYPE 18,R1,R2,L,L1
18   FØRMAT('   GIVEN DATA R1 ='E15.8,' R2 ='E15.8,/
    115X,'L ='E15.8,' L1 ='E15.8/)
     ACCEPT 4,IØK
     IF(IØK.LT.0) GØ TØ 125
     IF(NØRMAL.NE.0)GØ TØ 130
     RBAR=(R1+R2)*0.5D0
     R1=R1/RBAR
     R2=R2/RBAR
     L=L/RBAR
130  TYPE 19,NCØIL,R1,R2,L,A9
19   FØRMAT('   NØRMALIZED DATA FØR CØIL NØ.'I3,' WILL BE  '/
```

```
     1        6X,'INNER COIL RADIUS (R1) =',F15.9/
     2 6X,'OUTER COIL RADIUS (R2) =',F15.9/
     3  13X,'COIL LENGTH (L) =',F15.9
     4 /14X,'AIR VALUE (A9) =',F15.9/)
      ACCEPT 4,IOK
      IF(IOK.LT.0) GO TO 125
      WRITE (IFILE,15)OR1,OR2,OL
      IF (IMORE.LT.0) GO TO 135
      TYPE 20
20    FORMAT(
     1'  NEXT SET OF DATA GIVES INFORMATION ABOUT THE CONDUCTORS'/
     2'  N=NUMBER OF CONDUCTORS'/
     3'  N.LT.0 MEANS END OF ANY ADDITIONAL CASES WITH GIVEN COIL DATA'/
     4'  IHAVEM=1 MEANS DATA IS GIVEN FOR EM=OMEGA*MU*SIGMA*RBARSQ'/
     5'  IHAVEM=0 MEANS EM MUST BE CALCULATED BY THIS FORMULA '/
     6'  IHAVEM=-1 MEANS EM MUST BE CALCULATED FROM RESISTIVITY'/)
135   CONTINUE
      TYPE 21
21    FORMAT('   TYPE IN N,IHAVEM'/)
      ACCEPT 4,N,IHAVEM
      TYPE 22,N,IHAVEM
22    FORMAT('   N ='I3,' IHAVEM =' I3/)
      ACCEPT 4,IOK
      IF(IOK.LT.0) GO TO 135
      WRITE(IFILE,11)N,IHAVEM
      IF(N.LE.0)GO TO 105
      NCASE=NCASE+1
      IF(IHAVEM.GT.0)GO TO 190
      IF(IMORE.LT.0)GO TO 140
      TYPE 23
23    FORMAT(
     1'  FREQ IS FREQUENCY OF THE DRIVING CURRENT (KHZ)'/
     2'  OMEGA IS ANGULAR FREQUENCY OF THE DRIVING CURRENT,=2PI*FREQ*E3'
     3/'  OMEGA WILL BE CALCULATED IN PROGRAM FROM FREQ GIVEN AS DATA'/
     4'  MEAN COIL RADIUS RBAR MUST BE GIVEN IN INCHES WITH DATA'/
     5'  IF IHAVEM.LT.0 AND NORMAL.NE.0'/)
140   TYPE 24
24    FORMAT('   TYPE IN FREQ'/)
      ACCEPT 13,FREQ
      OMEGA=2.0D3*PI*FREQ
      TYPE 25,FREQ,OMEGA
25    FORMAT('   FREQ ='E15.8,' OMEGA ='D15.8/)
      ACCEPT 4,IOK
      IF(IOK.LT.0) GO TO 140
      WRITE (IFILE,15) FREQ
      IF(NORMAL.EQ.0) GO TO 150
145   TYPE 26
26    FORMAT('   TYPE IN RBAR'/)
      ACCEPT 13,RBAR
      TYPE 27,RBAR
27    FORMAT('   RBAR ='E15.8/)
      ACCEPT 4,IOK
      IF(IOK.LT.0) GO TO 145
      WRITE (IFILE,15) RBAR
150   IF(IHAVEM.LT.0) GO TO 170
      CONST=(RBAR*CONST1)**2
      IF(IMORE.LT.0) GO TO 155
      TYPE 28
```

```
 28   FØRMAT(
     1'  EM(I) IS THIS VALUE FØR EACH CØNDUCTØR I=1 TØ N'/
     2'  SIGMA(I) IS CØNDUCTIVITY FØR EACH CØNDUCTØR IF IHAVEM=0'/
     3'  PERM(I) IS RELATIVE PERMEABILITY ØF EACH CØNDUCTØR'/)
      TYPE 29
 29   FØRMAT(
     1'  R(I) IS THE INNER RADIUS ØF EACH CØNDUCTØR (INCHES ØR NØRM.)'/
     2'  BE SURE TØ GIVE CØNDUCTØR RADII AS NØRMALIZED, IF '/
     3'  CØIL DIMENSIØNS WERE GIVEN AS NØRMALIZED ØRIGINALLY'/  )
 155  DØ 165 I=1,N
 160  TYPE 30,I
 30   FØRMAT('  TYPE IN R,SIGMA,PERM FØR CØNDUCTØR NØ.' I3/)
      ACCEPT 13,R(I),SIGMA,PERM(I)
      MU2=MU*PERM(I)
      TYPE 31,I,R(I),MU2,SIGMA,PERM(I)
 31   FØRMAT('  FØR CØNDUCTØR NØ.'I3/5X,'R =',E15.8,3X,
     1'MU ='E15.8/' SIGMA ='E15.8,' PERM ='E15.8/)
      ACCEPT 4,IØK
      IF(IØK.LT.0) GØ TØ 160
      EM(I)=ØMEGA*MU*SIGMA*CØNST*PERM(I)
      TYPE 32,EM(I)
 32   FØRMAT('  THESE DATA GIVE EM ='E15.8/)
      ACCEPT 4,IØK
      IF(IØK.LT.0) GØ TØ 160
      WRITE(IFILE,15)R(I),SIGMA,PERM(I)
 165  CØNTINUE
      GØ TØ 205
C
C        NUMBER 0.5093979E3 IS THE PRØDUCT ØF CØNVERSIØN FACTØRS,
C        (2*PI*E3)*(4*PI*E-7)*(E8)*(.0254**2)
C
 170  CØNST=0.5093979E3*RBAR*RBAR*FREQ
      IF(IMØRE.LT.0)GØ TØ 175
      TYPE 33
 33   FØRMAT('   RHØ(I) IS RESISTIVITY FØR EACH CØNDUCTØR
     1 (MICRØHM-CM)'/)
 175  DØ 185 I=1,N
 180  TYPE 34,I
 34   FØRMAT('   TYPE IN R,RHØ,PERM FØR CØNDUCTØR NØ.',I3/)
      ACCEPT 13,R(I),RHØ(I),PERM(I)
      TYPE 35,R(I),RHØ(I),PERM(I)
 35   FØRMAT('   R=',E15.8,' RHØ=',E15.8,' PERM=',E15.8/)
      ACCEPT 4,IØK
      IF(IØK.LT.0)GØ TØ 180
      ZEM=CØNST*PERM(I)/RHØ(I)
      TYPE 32,ZEM
      ACCEPT 4,IØK
      IF(IØK.LT.0)GØ TØ 180
      EM(I)=ZEM
      WRITE(IFILE,15)R(I),RHØ(I),PERM(I)
 185  CØNTINUE
      GØ TØ 205
 190  DØ 200 I=1,N
 195  TYPE 36,I
 36   FØRMAT('  TYPE IN R,EM,PERM FØR CØNDUCTØR NØ.'I3/)
      ACCEPT 13,R(I),EM(I),PERM(I)
      TYPE 37,R(I),EM(I),PERM(I)
```

```
37    FØRMAT('   R ='E15.8,' EM ='E15.8,
     1'   PERM ='E15.8/)
      ACCEPT 4,IØK
      IF(IØK.LT.0) GØ TØ 195
      WRITE(IFILE,15) R(I),EM(I),PERM(I)
200   CØNTINUE
205   CØNTINUE
      TYPE 38,NCASE,NCØIL
38    FØRMAT(/6X,'CASE NØ.',I3,' ØF CØIL NØ.',I3/)
      TYPE 39,N
39    FØRMAT( I13,' CØNDUCTØRS ØUTSIDE CØIL'/5X,'INNER RADIUS'
     1 ,10X,'M',11X,'PERMEABILITY')
      IF(NØRMAL.NE.0)GØ TØ 215
      DØ 210 I=1,N
210   R(I)=R(I)/RDAR
215   DØ 220 K=1,N
      TYPE 40,K,R(K),EM(K),PERM(K)
40    FØRMAT(I3,3E15.6)
220   CØNTINUE
      TYPE 41
41    FØRMAT(/)
      ACCEPT 4,IØK
      IF(IØK.LT.0) GØ TØ 225
      GØ TØ 135
225   TYPE 42
42    FØRMAT('    IRRETRIEVABLE ERRØRS IN DATA, MUST REDØ IT ALL'/)
      GØ TØ 240
230   TYPE 43
43    FØRMAT(6X,'END ØF DATA FØR CASES TØ BE RUN ØN INNMUL PRØGRAM'/)
235   WRITE(IFILE,44)
44    FØRMAT('/*'/'//'/)
      ENDFILE IFILE
240   STØP
      END
```

III. (B) Data Description

The data are defined for the TELINC.F4 program in the same order that the DRIVER program requires them for execution of INNMUL. The FORTRAN names of the variables, with their meanings and units, if any, will be given below. The format specifications apply only to the final form of the data file when it is submitted with INNMUL and its DRIVER to the IBM/360 for execution. The outline of data entry given in Fig. 13 corresponds to the order given for the lines on the teletype, or card-image equivalents.

First, data are given for a coil and its dimensions.

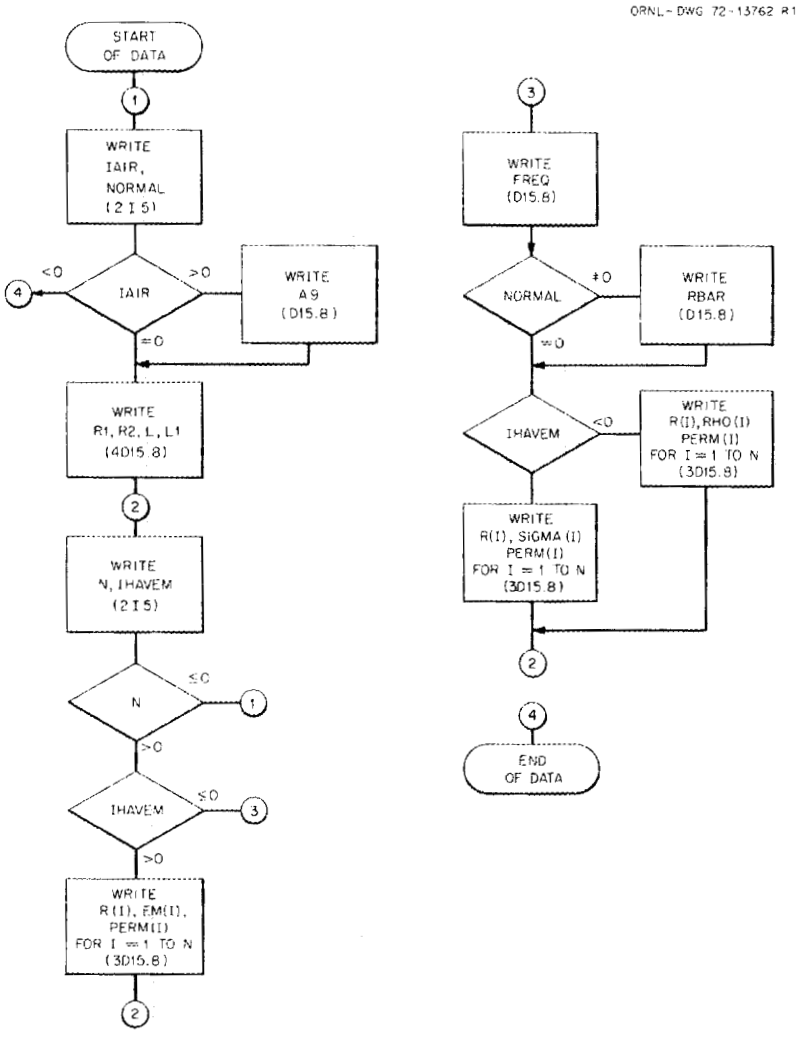

Fig. 13. Flow Outline of Data for the Program DRIVER.

Line 1:

IAIR, NORMAL Format (2I5)*

IAIR (a flag) > 0 if A9 is to be read as data;
= 0 if A9 is to be calculated by the INNMUL program;
< 0 if input data are ended and no new coil data are to be given.

NORMAL (a flag) = 0 if the coil dimensions are given in inches, or some other unit;
= 1 if coil dimensions are given in normalized form, that is, divided by the mean coil radius.

Line 1a:

A9 Format (D15.8)**

A9 is the air value factor for normalization of the coil impedance. In practice, it is usually calculated by another program, called AIRCO.[9]

Line 2:

R1, R2, L, L1 Format (4D15.8)**

R1 is the inner coil radius.
R2 is the outer coil radius.
L is the distance to the top of the coil from the z=0 plane.
L1 is the distance to the bottom of the coil from the z=0 plane.
Alternatively, L is conveniently given as the length of the coil, and then L1=0 is given. Only the length of the coil is actually needed by the program.

The value given to the flag NORMAL dictates units used. If inches are not used for unnormalized dimensions, caution must be exercised in other data requiring mean coil radius. Must use IHAVEM > 0.

The next set of data gives information about the conductors.

Line 3:

N, IHAVEM Format (2I5)*

N is the number of conductors in one set of conductor data.

---

*All values with an I5 format should be entered right-justified as an integer, no decimal point, in a field of 5 places, with as many blanks as needed on the left to fill up the 5 places. 2I5 is used for two such fields, making 10 spaces in all.

**All values with a D15.8 format should be entered as a number with decimal point in a field of 15 places. The D exponent form should be used, positioned so that the exponent is right-justified in the 15-place field. 3D15.8 or 4D15.8 allows 3 or 4 such fields, respectively, making 45 or 60 spaces.

$N \leq 0$ indicates that no more sets of conductor data are to be given. Then recycle to Line 1 for a new coil and then further conductors for that coil.

IHAVEM (flag) indicates how the quantities, $\omega\mu\sigma\bar{r}_m^2$, are to be given for the conductors (see sect. IIA of this appendix).

IHAVEM > 0 indicates that the quantities will be given directly;
$= 0$ indicates that those quantities will be calculated from other data including σ;
< 0 indicates the quantities will be calculated from other data, using resistivity, ρ rather than σ.

Line 4: (used if IHAVEM > 0)

Use as many lines as the number N of conductors.

R(I), EM(I), PERM(I) Format (3D15.8)**

R(I) is the inner coil radius of conductor I. It is given according to the flag NORMAL which was given as part of the coil data.

The radii are given in descending order of size. All radii will be greater than one if they are normalized when given as data.

EM(I) is the quantity $\omega\mu\sigma\bar{r}_m^2$ for conductor I.

PERM(I) is the relative permeability, μ_{REL}, for conductor I.

Then recycle to line 3 for another set of conductors or to indicate end of data for this coil.

Line 5: (used if IHAVEM ≤ 0)

FREQ Format (D15.8)**

FREQ is the frequency of the driving current given in kilohertz. The angular frequency is calculated to be $\omega = 2\pi \times$ (FREQ) $\times 10^3$.

Line 5a: (use if IHAVEM ≤ 0 and NORMAL = 1)

RBAR Format (D15.8)**

RBAR is the mean coil radius in inches. This is needed since coil data is given as normalized and hence RBAR is not calculated by the program.

Line 6: (used if IHAVEM = 0)

Use as many lines as the number N of conductors.

R(I), SIGMA(I), PERM(I) Format (3D15.8)**

R(I) and PERM(I) are the same as Line 4.

SIGMA(I) is the conductivity, σ, of conductor I, in mhos/m.

Then recycle to Line 3 for another set of conductors, or to indicate the end of data for this coil.

Line 6a: (used if IHAVEM < 0)

Use as many lines as the number N of conductors.

R(I), RHO(I), PERM(I) Format (3D15.8)**

R(I) and PERM(I) are the same as Line 4.
RHO(I) is the resistivity, ρ, for each conductory, in $\mu\Omega$-cm.

Then recycle to Line 3 for another set of conductors, or to indicate the end of data for this coil.

III. (C) Sample Data and Results

In relation to the PDP-10, there are four steps to processing data with INNMUL by remote methods. Each step is a response to the Monitor symbol ".", which appears at the left of a new line when in Monitor Mode. A sample teletype printout may be seen at the end of this section.

(1.) .EXECUTE TELINC.F4

Then the user responds from the keyboard, with the input data.

(2.) .TYPE FORO1.DAT

Then the user may inspect the typed-out data block that has been created in the preceding step, to see if it is satisfactory. Changes may be made using TECO.

```
(3.) .R SUBMIT
     *=CVDSAV.JCL
     *=USEINN.F4
     */*
     *=AZZZZZ.JCL
     *=FORO1.DAT
     *ENDINPUT
```

This step submits the job to the IMB/360 computer. After it has had time to run, the next step is to type out the results.

(4.) .TYPE CVDC.PRT

Some sample cases have been submitted in this manner, using three different coils from the work being done.

The first coil to be used has an air value, A9, given as 0.0463502. The dimensions, given in unnormalized form, are R1 = 0.350, R2 = 0.360, and L = 13.625. There are three conductors outside the coil, and data

for them are to be given with resistivity, indicated by the flag, -1. The frequency is 24.7, and the radius, resistivity, and relative permeability are given for the three conductors. The three radii are 1.813, 0.3925, and 0.3625. The three resistivities are 16.57, 142.9, 16.57. The three permeabilities are all one.

Looking again at the sample data, another case is done using the same coil. Again there are three conductors outside the coil, and this time the data are to include the M value for each conductor, as indicated by the flag of one. Then the radius, M value, and relative permeability are given for each conductor. The three M values are 95.694792, 0, and 95.694792.

No more cases are given in this data block for this coil, as signalled by a value of -1 for the number of conductors. The next coil has an air value of 8.45005×10^{-4}, and unnormalized given dimensions, R1 = 0.27625, R2 = 0.27875, and L = 2.0625. There are three conductors outside the coil, and radius, resistivity, and permeability are given for each conductor as well as the frequency of 20 kHz. The three radii are 0.376, 0.375, and 0.356. The three resistivities are 10, 70, and 80 μΩ-cm. The three relative permeabilities are 1, 10^3, and 1.

The third coil which is given in the sample data block has an air value 0.117776, and this time the coil dimensions are given in normalized form. These normalized values are R1 = 0.97761194, R2 = 1.0223881, and L = 38.80597. The first case consists of two conductors, with normalized radii, M value, and relative permeability given for each conductor. The radii are 1.201493 and 1.08209. The two M values are 3.778399 and 2.874167. The relative permeabilities are both one.

The second case of the third sample coil is the same as the first, with data presented differently. Data for the two conductors are to be given with resistivity, indicated by a flag of -1. Then the frequency is given, 10 kHz, and also the mean coil radius in inches, 0.335, since the coil was given as already normalized. This is followed by the radius, resistivity, and relative permeability for each conductor. The two resistivities are 151.3 and 19.89 μΩ-cm. The relative permeabilities are both one.

Again, no more cases are to be submitted for the third coil, as indicated by -1 for the number of conductors. The data are closed out when another -1 is given as the first datum for another possible coil.

The teletype listings follow for this sample. They show the four steps involved, and the data file with results of the execution of the program.

(1.)

```
.EXECUTE TELINC.F4
FØRTRAN:  TELINC.F4
```

(Interactive preparation of data block.)

(2.)

```
.TYPE FØR01.DAT
//GØ.FT50F001 DD *
    1     0
 0.46350200D-01
 0.35000000D+00 0.36000000D+00 0.13625000D+02
    3    -1
 0.24700000D+02
 0.18130000D+01 0.16570000D+02 0.10000000D+01
 0.39250000D+00 0.14290000D+03 0.10000000D+01
 0.36250000D+00 0.16570000D+02 0.10000000D+01
    3     1
 0.18130000D+01 0.95694792D+02 0.10000000D+01
 0.39250000D+00 0.00000000D+00 0.10000000D+01
 0.36250000D+00 0.95694792D+02 0.10000000D+01
   -1     0
    1     0
 0.84500501D-03
 0.27625000D+00 0.27875000D+00 0.20625000D+01
    3    -1
 0.20000000D+02
 0.37600000D+00 0.10000000D+02 0.10000000D+01
 0.37500000D+00 0.70000000D+02 0.10000000D+04
 0.35600000D+00 0.80000000D+02 0.10000000D+01
   -1     0
    1     1
 0.11777600D+00
 0.97761194D+00 0.10223881D+01 0.38805970D+02
    2     1
 0.12014930D+01 0.37783990D+01 0.10000000D+01
 0.10820900D+01 0.28741670D+02 0.10000000D+01
    2    -1
 0.10000000D+02
 0.33500000D+00
 0.12014930D+01 0.15130000D+03 0.10000000D+01
 0.10820900D+01 0.19890000D+02 0.10000000D+01
   -1     0
   -1     0
/*
//
```

(3.)

```
.R SUBMIT

*=CVDSAV.JCL
*=USEINN.F4
*/*
*=AZZZZZ.JCL
*=FØRØ1.DAT
*ENDINPUT
JØB QUEUED FØR THE 360/91

.
```

(4.)

```
TYPE CVDC.PRT

     SUMMARY ØUTPUT FØR CØIL NØ.   1
     INNER CØIL RADIUS (R1) =     0.985915493
     ØUTER CØIL RADIUS (R2) =     1.014084507
            CØIL LENGTH (L) =    38.380281690
             AIR VALUE (A9) =     0.046350200

     CASE NØ.   1 ØF CØIL NØ.   1

           3 CØNDUCTØRS ØUTSIDE CØIL
    INNER RADIUS            M          PERMEABILITY    RESISTIVITY
1    5.107042D 00    9.569479D 01    1.000000D 00    1.657000D 01
2    1.105634D 00    1.109631D 01    1.000000D 00    1.429000D 02
3    1.021127D 00    9.569479D 01    1.000000D 00    1.657000D 01
     NØRMALIZED CØIL IMPEDANCE
     NØRMALIZED REAL PART =     1.622770D-01
     NØRMALIZED IMAG PART =     1.559747D-01
                MAGNITUDE =     2.250820D-01
           PHASE(RADIANS) =     7.655979D-01
           PHASE(DEGREES) =     4.386553D 01

     CASE NØ.   2 ØF CØIL NØ.   1

           3 CØNDUCTØRS ØUTSIDE CØIL
    INNER RADIUS            M          PERMEABILITY    RESISTIVITY
1    5.107042D 00    9.569479D 01    1.000000D 00
2    1.105634D 00    0.0             1.000000D 00
3    1.021127D 00    9.569479D 01    1.000000D 00
     NØRMALIZED CØIL IMPEDANCE
     NØRMALIZED REAL PART =     2.117890D-01
     NØRMALIZED IMAG PART =     1.384353D-01
                MAGNITUDE =     2.530196D-01
           PHASE(RADIANS) =     5.789348D-01
           PHASE(DEGREES) =     3.317052D 01

     SUMMARY ØUTPUT FØR CØIL NØ.   2
     INNER CØIL RADIUS (R1) =     0.995495495
     ØUTER CØIL RADIUS (R2) =     1.004504505
            CØIL LENGTH (L) =     7.432432432
             AIR VALUE (A9) =     0.000845005
```

```
CASE NØ.  1 ØF CØIL NØ.  2

        3 CØNDUCTØRS ØUTSIDE CØIL
  INNER RADIUS          M          PERMEABILITY    RESISTIVITY
1  1.354955D 00   7.845364D 01   1.000000D 00   1.000000D 01
2  1.351351D 00   1.120766D 04   1.000000D 03   7.000000D 01
3  1.282883D 00   9.806706D 00   1.000000D 00   8.000000D 01
  NØRMALIZED CØIL IMPEDANCE
  NØRMALIZED REAL PART =     1.670453D-01
  NØRMALIZED IMAG PART =     8.960407D-01
             MAGNITUDE =     9.114785D-01
       PHASE(RADIANS) =      1.386486D 00
       PHASE(DEGREES) =      7.943980D 01

  SUMMARY ØUTPUT FØR CØIL NØ.  3
  INNER CØIL RADIUS (R1) =    0.977611940
  ØUTER CØIL RADIUS (R2) =    1.022388100
        CØIL LENGTH (L) =    38.805970000
         AIR VALUE (A9) =     0.117776000

CASE NØ.  1 ØF CØIL NØ.  3

        2 CØNDUCTØRS ØUTSIDE CØIL
  INNER RADIUS          M          PERMEABILITY    RESISTIVITY
1  1.201493D 00   3.778399D 00   1.000000D 00
2  1.082090D 00   2.874167D 01   1.000000D 00
  NØRMALIZED CØIL IMPEDANCE
  NØRMALIZED REAL PART =     2.340780D-01
  NØRMALIZED IMAG PART =     3.563222D-01
             MAGNITUDE =     4.263309D-01
       PHASE(RADIANS) =      9.895662D-01
       PHASE(DEGREES) =      5.669796D 01

CASE NØ.  2 ØF CØIL NØ.  3

        2 CØNDUCTØRS ØUTSIDE CØIL
  INNER RADIUS          M          PERMEABILITY    RESISTIVITY
1  1.201493D 00   3.778399D 00   1.000000D 00   1.513000D 02
2  1.082090D 00   2.874167D 01   1.000000D 00   1.989000D 01
  NØRMALIZED CØIL IMPEDANCE
  NØRMALIZED REAL PART =     2.340780D-01
  NØRMALIZED IMAG PART =     3.563222D-01
             MAGNITUDE =     4.263309D-01
       PHASE(RADIANS) =      9.895662D-01
       PHASE(DEGREES) =      5.669797D 01
  END ØF CASES RUN ØN INNMUL PRØGRAM
```

IV. ATTEN PROGRAM

This program is written to calculate the voltage out, V_{out}, by Eq. (69), in consideration of the external electrical circuit (Fig. 4) and Eqs. (61) or (62). It is written to receive as input data the coil and circuit data, as well as the normalized coil impedance, as calculated by the subroutines INNMUL or ENCMUL.

The program is written in the form of a FORTRAN subroutine named VOUT. The driver program must provide the necessary data. At present this is written into the program directly for the execution of one case. This may be called into execution on the PDP-10 by the teletype command, .EXECUTE VOUT.F4 . The subroutine, VOUT, must be supplied by a driver program with the familiar coil data:

OMEGA = angular frequency,
R1 = normalized inner coil radius,
R2 = normalized outer coil radius,
L = normalized coil length,
RBAR = mean coil radius (meters), and
A9 = air normalization value.

The real and imaginary parts ZRL and ZIM of the normalized coil impedance Zn are required.

The required circuit data are identified in Fig. 4 as VO, RO, R9, C6, C7, R6, and R7. Number of turns, TN, must also be given.

The result, VOUT, is given in terms of phase and magnitude, as well as by real and imaginary parts.

The driver program which is listed here has all these data written into the program, with some being calculated from other data. For example, the magnitude and phase of the normalized coil impedance are given first, then converted by the driver program into real and imaginary parts for VOUT to use as data.

Other driver programs might be developed for more extensive cases, or this one may be varied using TECO commands on the PDP-10.

A listing of the VOUT subroutine with its driver program follows.

```
      CØMMØN/ CIRCT/VO,RO,C6,R6,ZDRL,ZDIM,ZMRL,ZMIM,ZPURL,ZPUIM,
     1 R7,C7,R9,TN
      CØMMØN/ INNML/ØMEGA,L,R1,R2,A9,ZRL,ZIM,RBAR
      REAL*4 MU,L
      DATA PI/3.1415 9265E0/,CØNST/0.0254E0/
      FREQ=27.72E0
      TYPE 1
1     FØRMAT(' SAVS')
      ØMEGA=2.0E3*PI*FREQ
      R1=0.350E0
      R2=0.360E0
      L=13.625E0
      RBAR=(R1+R2)*0.5E0
      L=L/RBAR
      R1=R1/RBAR
      R2=R2/RBAR
      TYPE 2,FREQ,ØMEGA,L,R1,R2
2     FØRMAT('  FREQ ='E15.7,' ØMEGA ='E15.7,/
     1'      L ='E15.7,'     R1 ='E15.7,'     R2 ='E15.7)
      RBAR=RBAR*CØNST
      A9=0.463502E-1
      A1=0.218077514E0
      P1=0.772603445E0
      ZRL=A1*CØS(P1)
      ZIM=A1*SIN(P1)
      TYPE 3,RBAR,A9,ZRL,ZIM,A1,P1
3     FØRMAT('  RBAR ='E15.7,'     A9 ='E15.7,/
     1'    ZRL ='E15.7,'    ZIM ='E15.7,/
     2'     A1 ='E15.7,'     P1 ='E15.7)
      VO=3.2341E0
      RO=464.E0
      R9=464.E0
      C6=3.83E-9
      C7=3.83E-9
      TYPE 4,VO,RO,R9,C6,C7
4     FØRMAT('     VO ='E15.7,'     RO ='E15.7,'     R9 ='E15.7,/
     1'     C6 ='E15.7,'     C7 ='E15.7)
      R6=69.4E0
      R7=R6
      TN=190.75E0
      TYPE 5,R6,R7,TN
5     FØRMAT('     R6 =',E15.7,'     R7 ='E15.7,'     TN ='E15.7)
      CALL VØUT(VØRL,VØIM,VØABS,VØARG)
      IF(VØARG.LT.0.0E0)VØARG=VØARG+PI
      TYPE 6,VØRL,VØIM,VØABS,VØARG
6     FØRMAT('  VØRL ='E15.7,'  VØIM ='E15.7,/' VØABS ='E15.7,
     1' VØARG ='E15.7)
      DEGR=VØARG*180.E0/PI
      TYPE 7,DEGR
7     FØRMAT('  DEGR ='E15.7/)
      TYPE 1
      STØP
      END
      SUBRØUTINE VØUT(VØRL,VØIM,VØABS,VØARG)
      CØMMØN/ CIRCT/VO,RO,C6,R6,ZDRL,ZDIM,ZMRL,ZMIM,ZPURL,ZPUIM,
     1 R7,C7,R9,TN
      CØMMØN/ INNML/ØMEGA,L,R1,R2,A9,ZRL,ZIM,RBAR
```

```
      REAL*4 MU,L
      DATA G/1.0E0/,MU/0.0000012566370 61E0/
      R=R2-R1
      A=2.E0*ØMEGA*TN*TN*MU*RBAR*A9
     1 /(L*L*R*R)
      ZMRL=A*ZRL
      ZDRL=ZMRL
      ZPURL=ZMRL
      ZMIM=A*ZIM
      ZDIM=ZMIM
      ZPUIM=ZMIM
      B=-VO*R9*G
      VNUMRL=B*ZMRL
      VNUMIM=B*ZMIM
      P=C6*RO
      Q=C7*R9
      ØMEGSQ=ØMEGA*ØMEGA
      ØMEGCU=ØMEGSQ*ØMEGA
      X=ØMEGSQ*P*Q-1.0E0
      Y=-ØMEGA*(P+Q)
      S=ZMRL*ZMRL-ZMIM*ZMIM
      T=2.0E0*ZMRL*ZMIM
      U=X*S-Y*T
      W=Y*S+X*T
      A=ØMEGA*P
      B=ZDRL+R6
      E=A*B+ZDIM
      F=A*ZDIM-(B+RO)
      A=ØMEGA*Q
      B=ZPURL+R7
      C=A*B+ZPUIM
      D=A*ZPUIM-(B+R9)
      A=C*E-D*F
      B=D*E+C*F
      VDENRL=A+U
      VDENIM=B+W
      DENSQ=VDENRL*VDENRL+VDENIM*VDENIM
      VØRL=(VNUMRL*VDENRL+VNUMIM*VDENIM)/DENSQ
      VØIM=(VNUMIM*VDENRL-VNUMRL*VDENIM)/DENSQ
      VØABS=SQRT(VØRL*VØRL+VØIM*VØIM)
      IF(VØRL.EQ.0.E0)GØ TØ 100
      VØARG=ATAN(VØIM/VØRL)
      RETURN
100   VØARG=MU*0.125E7
      RETURN
      END
```

A listing of the data and results of the execution of the preceding program is shown below.

```
.EXECUTE VØUT.F4
FØRTRAN:  VØUT.F4
LØADING

VØUT 2K CØRE
EXECUTIØN

SAVS
 FREQ =   0.2772000E+02 ØMEGA =   0.1741699E+06
    L =   0.3838028E+02     R1 =   0.9859155E+00     R2 =   0.1014085E+01
 RBAR =   0.9017000E-02     A9 =   0.4635020E-01
  ZRL =   0.1561644E+00    ZIM =   0.1522185E+00
   A1 =   0.2180775E+00     P1 =   0.7726034E+00
   V0 =   0.3234100E+01     R0 =   0.4640000E+03     R9 =   0.4640000E+03
   C6 =   0.3830000E-08     C7 =   0.3830000E-08
   R6 =   0.6940000E+02     R7 =   0.6940000E+02     TN =   0.1907500E+03
 VØRL =   0.5039879E-02   VØIM =   0.4142019E-02
VØABS =   0.6523550E-02 VØARG =   0.6879222E+00
 DEGR =   0.3941504E+02

SAVS

CPU TIME: 0.35  ELAPSED TIME: 59.08
NØ EXECUTIØN ERRØRS DETECTED

EXIT

.
```

INTERNAL DISTRIBUTION
(149 copies)

(3) Central Research Library
ORNL — Y-12 Technical Library
Document Reference Section
(10) Laboratory Records Department
Laboratory Records, ORNL RC
ORNL Patent Office
G. M. Adamson, Jr.
S. E. Beall
G. W. Clark
J. E. Coulter (Y-12)
F. L. Culler
J. E. Cunningham
(100) C. V. Dodd
D. E. Ferguson
J. H Frye, Jr.
J. W. Garber (Y-12)
W. H. Hall (K-25)
W. O. Harms
(3) M. R. Hill
P. J. Long (Y-12)
D. L. Mason (Y-12)
R. W. McClung
H. E. McCoy
L. E. McNeese
F. D. Mundt (Y-12)
E. L. Nicholson
P. Patriarca
M. W. Rosenthal
W. D. Ross (Y-12)
W. F. Schaffer, Jr.
H. C. Schweinler
W. A. Simpson
G. M. Slaughter
J. H. Smith (K-25)
D. B. Trauger
W. E. Unger
H. O. Weeren
J. R. Weir, Jr.

EXTERNAL DISTRIBUTION
(52 copies)

AEC, DIVISION OF REACTOR DEVELOPMENT AND TECHNOLOGY, Washington, DC 20545

J. M. Simmons

AEC, SITE REPRESENTATIVES, Oak Ridge National Laboratory, P. O. Box X, Oak Ridge, TN 37830

D. F. Cope
C. L. Matthews

AEROJET NUCLEAR CORP., P. O. Box 1845, Idaho Falls, ID 83401

F. L. Crestridge, ARA-3

AIR FORCE KELLY AIR FORCE BASE, Kelly Air Force Base, TX 78241

Bernard Boisvert, SAAMA/MMEW

AIR FORCE KIRTLAND AIR FORCE BASE, Kirtland Air Force Base, NM 87117

C. E. Baum

AIR FORCE MATERIALS LABORATORY, Wright-Patterson Air Force Base, OH 45433

R. R. Rowland

AIR FORCE ROBBINS AIR FORCE BASE, Robbins Air Force Base, GA 31093

R. W. Bailey, Jr., WRAMA/MMETM

ARGONNE NATIONAL LABORATORY, 9700 Cass Avenue, Argonne, IL 60439

Harold Berger
C. J. Renken

ARMY EDGEWOOD ARSENAL, Edgewood Arsenal, MD 21010

Ronald Frailer, Physical Laboratory Branch, Inspection Operations Division

ARMY MATERIALS AND MECHANICS RESEARCH CENTER, Watertown, MA 02172

R. C. Grubinskas
C. P. Merhib, Nondestructive Information Analysis Center

ARMY REDSTONE ARSENAL, Redstone Arsenal, AL 35809

W. B. Treplett, AMSMI-QLC, Bldg. 4500

ATOMIC ENERGY OF CANADA, LTD., Chalk River, Ontario, Canada

J. W. Hilborn

BATTELLE MEMORIAL INSTITUTE, 505 King Avenue, Columbus, OH 43201

J. H. Flora

BMI-PACIFIC NORTHWEST LABORATORY, P. O. Box 999, Richland, WA 99352

D. L. Lessor
H. L. Libby

COMBUSTION ENGINEERING, INC., Prospect Hill Road, Windsor, CT 06095

J. Roth

DOW CHEMICAL COMPANY, P. O. Box 888, Golden, CO 80401

Dave Chamberlain, Nondestructive Testing Department
G. D. Lassahn

E. I. DU PONT DE NEMOURS COMPANY, Savannah River Laboratory, Aiken, SC 29801

Dan Clayton

GENERAL ELECTRIC, 175 Cortner Avenue, San Jose, CA 95125

D. L. Fischer, M/C 164

GENERAL ELECTRIC, Route I-75, Maildrop E-45, Evendale, OH 45215

R. F. Feldman

HANFORD ENGINEERING DEVELOPMENT LABORATORY, P. O. Box 1970, Richland, WA 99352

R. L. Brown, Jr.
C. B. Shaw

INSTITUTE OF NUCLEAR ENERGY RESEARCH, P. O. Box 3, Lung-Tan, Taiwan, Republic of China

Chwen Fu Huang

KNOLLS ATOMIC POWER LABORATORY, P. O. Box 1072, Schenectady, NY 12301

Don Gavin

LAWRENCE LIVERMORE LABORATORY, P. O. Box 808, Livermore, CA 94550

J. W. Sully

LOCKHEED MISSILES AND SPACE COMPANY, P. O. Box 504, Sunnyvale, CA 94088

A. J. Glispin, Dept. 84-35

LOS ALAMOS SCIENTIFIC LABORATORY, P. O. Box 1663, Los Alamos, NM 87544

D. Elliott

G. C. MARSHALL SPACE FLIGHT CENTER, Marshall Center, AL 35812

L. H. Burdette, MSFC-S&E-QUAL-QT
M. C. McIlwain, R-QUAL-ARA
F. M. Saxton, S&E-ASTR-1R

NASA-LEWIS RESEARCH CENTER, 21000 Brookpark Road, Cleveland, OH 44135

Alex Vary

NAVAL AIR DEVELOPMENT CENTER, Johnsville, Warminster, PA 18974

John Carlyle, MAMM-14

NAVAL SHIP ENGINEERING CENTER, Hyattsville, MD 20782

John Gleim

SANDIA CORPORATION, Division 7361, P. O. Box 5800, Albuquerque, NM 87115

R. A. Baker
D. W. Ballard

SANDIA CORPORATION, P. O. Box 969, Livermore, CA 94550

Dennis Rathbun

SOUTHWEST RESEARCH INSTITUTE, P. O. Drawer 28510, Sal Antonio, TX 78228

B. R. Wilson

UNITED KINGDOM ATOMIC ENERGY RESEARCH ESTABLISHMENT, Didcot, Berkshire, England

R. S. Sharpe

UNIVERSITY OF MICHIGAN, 2317 East Engineering Bldg., Ann Arbor, MI 48104

J. R. Frederick, Department of Electrical Engineering

UNIVERSITY OF MISSOURI, Columbia, MO 65201

D. L. Waidelich, Department of Electrical Engineering

UNIVERSITY OF TENNESSEE, Knoxville, TN 37916

C. C. Cheng, Department of Physics
W. E. Deeds, Department of Physics
J. F. Pierce, Department of Electrical Engineering
J. O. Thompson, Department of Physics

WESTINGHOUSE RESEARCH AND DEVELOPMENT, Beulah Road, Pittsburgh, PA 15235

J. K. White

AEC OPERATIONS OFFICE, P. O. Box E, Oak Ridge, TN 37830

Research and Technical Support Division

AEC TECHNICAL INFORMATION CENTER, OFFICE OF INFORMATION, P. O. Box 62, Oak Ridge, TN 37830

(2)