LOCKHEED MARTIN ENERGY RESEARCH LIBRARIES

3 4456 0513710 7

CENTRAL RESEARCH LIBRARY

ORNL-TM-4348

cy.25

OFFICE OF SALINE WATER

ORCON1: A FORTRAN CODE FOR THE CALCULATION OF A STEAM CONDENSER OF CIRCULAR CROSS SECTION

J. A. Hafford

[redacted]

OAK RIDGE NATIONAL LABORATORY
CENTRAL RESEARCH LIBRARY
DOCUMENT COLLECTION
LIBRARY LOAN COPY
DO NOT TRANSFER TO ANOTHER PERSON
If you wish someone else to see this document, send in name with document and the library will arrange a loan.

OAK RIDGE NATIONAL LABORATORY
OPERATED BY UNION CARBIDE CORPORATION • FOR THE U.S. ATOMIC ENERGY COMMISSION

This report was prepared as an account of work sponsored by the United States Government. Neither the United States nor the United States Atomic Energy Commission, nor any of their employees, nor any of their contractors, subcontractors, or their employees, makes any warranty, express or implied, or assumes any legal liability or responsibility for the accuracy, completeness or usefulness of any information, apparatus, product or process disclosed, or represents that its use would not infringe privately owned rights.

ORNL-TM-4248

AEC-Department of the Interior
Interagency Agreement 40-224-70
OSW Agreement No. 14-30-2535

OFFICE OF SALINE WATER

ØRCØN1: A FORTRAN CODE FOR THE CALCULATION OF A STEAM CONDENSER OF CIRCULAR CROSS SECTION

J. A. Hafford

NUCLEAR DESALINATION PROGRAM

I. Spiewak, Acting Director

JULY 1973

OAK RIDGE NATIONAL LABORATORY
Oak Ridge, Tennessee 37830
Operated by
UNION CARBIDE CORPORATION
for the
U.S. ATOMIC ENERGY COMMISSION
under
Contract No. W-7405-eng-26

LOCKHEED MARTIN ENERGY RESEARCH LIBRARIES

3 4456 0513710 7

CONTENTS

	Page
ABSTRACT	v
IDENTIFICATION	1
PURPOSE	1
SYSTEM	3
METHOD	3
DESCRIPTION OF MAIN PROGRAM AND SUBROUTINES	7
MAIN	7
SECALC	8
CØØLEX	12
HETTRN	12
INPUT	18
ØUTPUT	22
ADJUST	24
DFSVTY	24
XTR	24
PRSDRP	25
CPSFN	25
AKAFN	25
AMUFN	26
BMUFN	26
CPAFN	27
CPFN	27
HFGFN	28
PSATFN	28
RØEFN	28
SKBFN	28
SMUFN	29
TSATFN	29
VGFN	29

CONTENTS
(Contd.)

	Page
USAGE	30
Operating Instructions	30
Input	30
Description of the Computer Output	31
I. Error Messages	50
II. General Messages	54
NOMENCLATURE	57
MAIN	57
CØØLEX	62
HETTRN	65
INPUT	69
ØUTP1	71
SECALC	76
APPENDIX A. Heat Transfer and Pressure Drop Correlations Used in Subroutine HETTRN	81
APPENDIX B. Fortran Listing	87

ØRCØN1: A TORTRAN CODE FOR THE CALCULATION OF A STEAM CONDENSER OF CIRCULAR CROSS SECTION

ABSTRACT

ØRCØN1 is a Fortran IV program for design or metric study of steam condensers whose tubes form a horizontal bundle of circular or semicircular cross section with a central void. Baffles and a cooler section may be provided as options. The output shows steam conditions at each row. A sample problem and a Fortran listing of the program are included.

Keywords: condensers + design + heat transfer + programs (computers) + OSW sponsored + parametric studies.

ØRCØN1: A FORTRAN CODE FOR THE CALCULATION OF A STEAM CONDENSER OF CIRCULAR CROSS SECTION

J. A. Hafford

IDENTIFICATION

ØRCØN1:

Machine: IBM-360 Language: FORTRAN IV

Union Carbide Corporation
Nuclear Division
Oak Ridge Gaseous Diffusion Plant
Oak Ridge, Tennessee

PURPOSE

ØRCØN1 was written for the parametric study of generally circular steam condensers, with optional cooler sections having tube bundles of rectangular cross section.

The basic assumptions are:

a. Coolant flow is in the tube and makes a single pass through the condenser.

b. The condenser proper is a bundle of tubes of circular or semicircular cross section with a central void. For purposes of calculation the bundle is divided into identical "sectors" of 30° each, as illustrated in Figure 1.

c. The cooler is optional and when included is rectangular in cross-section and is initially equal in height to the radial length of a sector of the condenser. Steam flow proceeds vertically upward through the tube bank. (Note: The cooler calculation is independent of the geometry of the condenser. The code takes no recognition of the physical location of the cooler tubes.)

d. The tubes are spaced on an equilateral triangle pattern; however, for simplicity the tubes are further assumed to be evenly spaced on an arc with a radius from the center.

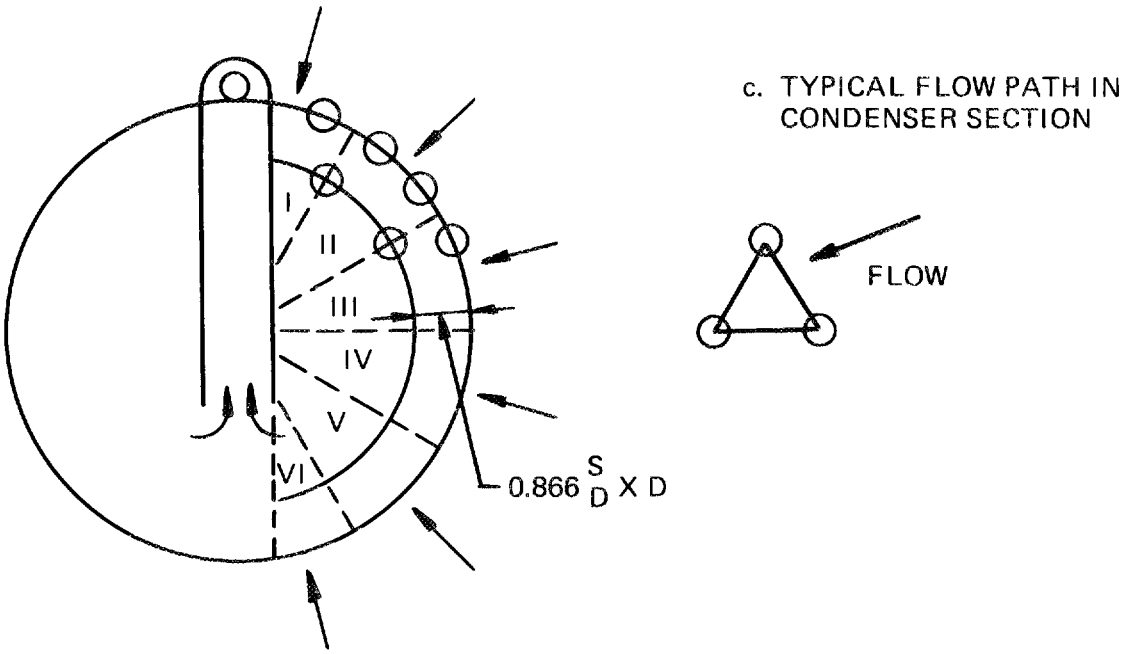

FIGURE 1. CIRCULAR CONDENSER BUNDLE

e. Baffle options on the shell side consist of either no baffles, or simple baffles at 2, 4, 8 and 10 o'clock.

f. Steam flow in the condenser proper is entirely radial, directed toward the void at center.

g. At most, only six sectors are calculated, assuming the bundle is symmetrical about a vertical center line.

SYSTEM

The code is written in FORTRAN IV for the IBM-360 computer. No tapes, drives or special equipment are needed. No programmed pauses or stops are included. All input is by punched card and all output is on a standard printer except for the option of outlet coolant temperatures on punched cards.

METHOD

It is desired to determine the operating characteristics of a condenser with a tube bundle of circular (or semicircular) cross section. The bundle is divided into 12 identical sectors, but only 6 sectors, at most, are actually calculated. For special shapes of cross section, any number of sectors, of the half bundle, may be calculated.

Figure 2 presents the program flow for the main program. MAIN calls INPUT from where all input data are read and printed.

The bundle geometry is then calculated. The number of rows of tubes and tubes per row for a sector are calculated. Inside and outside diameters for the void and bundle are calculated.

Tube flooding factors are then found. The number of tubes in a vertical row above a theoretical average tube in a row is used for the flooding factor. Figure 3 illustrates these calculations.

Cooler dimensions are estimated. These dimensions may be altered in the cooler subroutine if needed.

At this point, all remaining initialization of constants or unchanged parameters for the case is done.

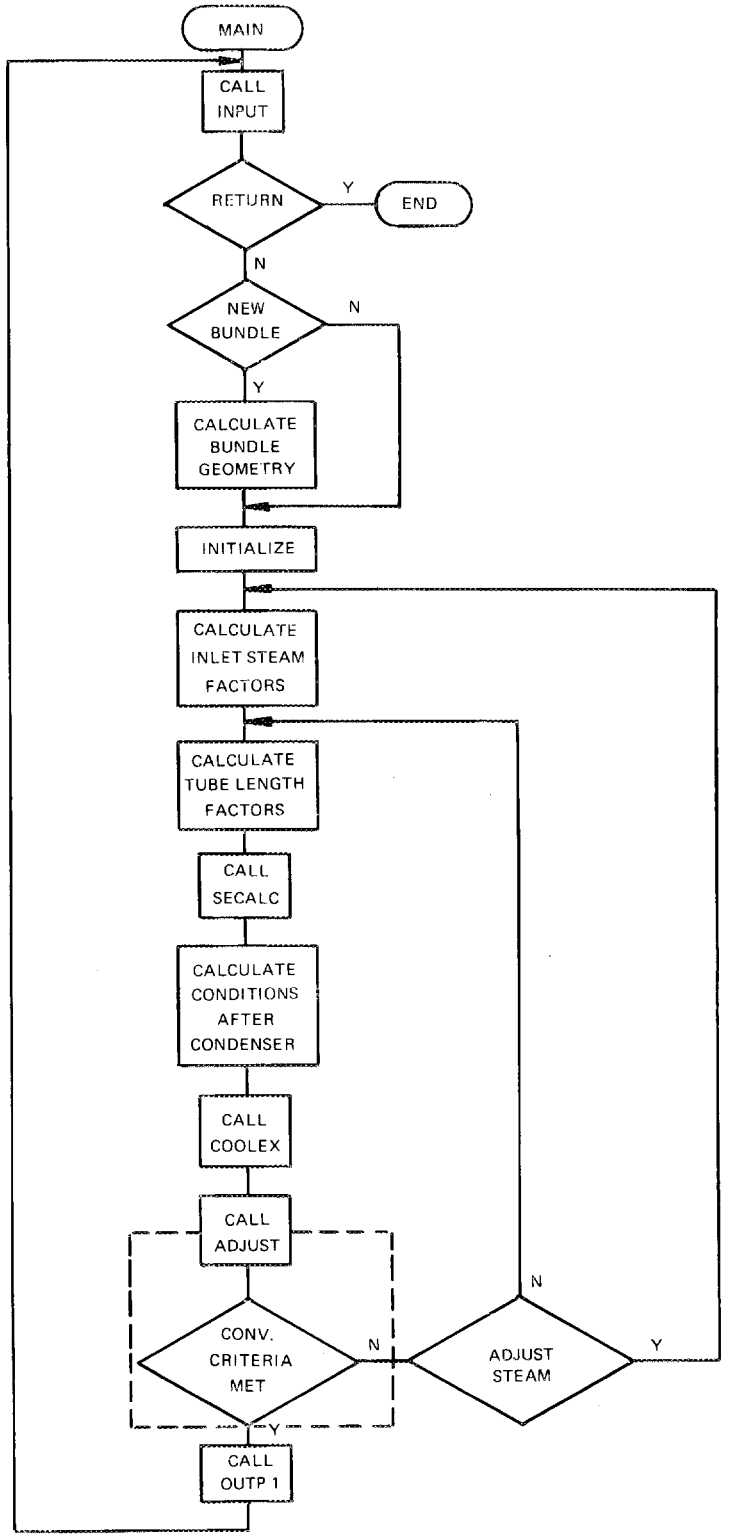

FIGURE 2. FLOW CHART OF MAIN PROGRAM

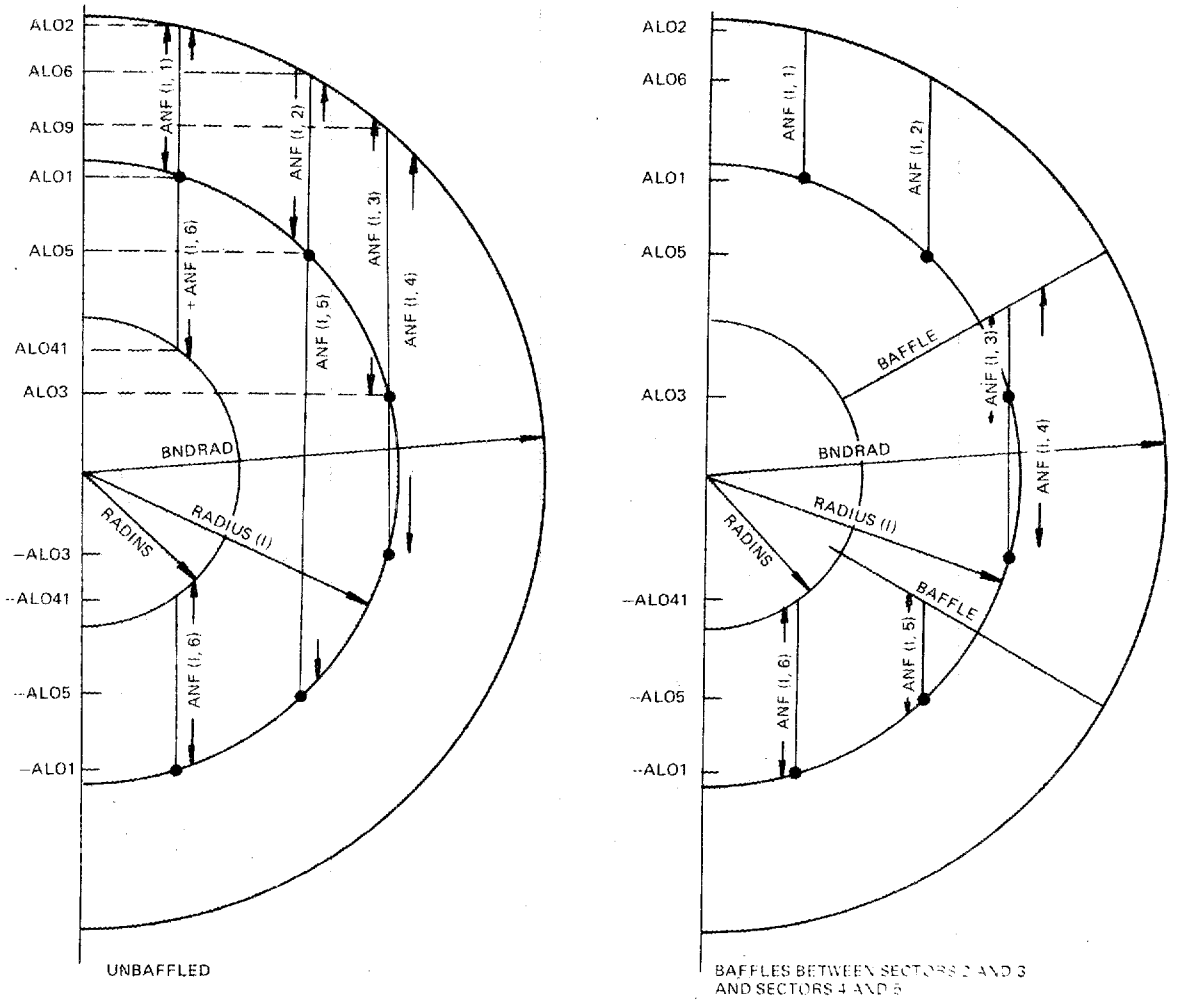

FIGURE 3. DIAGRAM TO ILLUSTRATE CALCULATION OF TUBE FLOODING FACTORS

Initialization is now done for factors that depend on inlet steam and tube length, since these values may be recalculated in successive attempts to arrive at a predetermined exit steam flow.

The subroutine SECALC is called to calculate all the parameters for each row in each sector; i.e., flow rates, temperatures, etc. Differences in flooding factor require that each sector of one half of the bundle is calculated separately.

A call to CØØLEX follows in which the cooler parameters are calculated. After the cooler, the exit fraction of steam is calculated and a call is made to subroutine ADJUST. This subroutine tests the exit fraction of steam to find if it is within required tolerance of the predetermined value. If not, then a new value of either inlet steam or tube length is set and the code returns to the initialization step in MAIN to repeat the calculations. This continues (maximum of 10 trials) until convergence with the input value is reached.

After achieving convergence, a call is made to ØUTP1. A number of averages are calculated in this subroutine in addition to the primary function of printing the results.

If desired, the outlet temperatures of the coolant, row by row, can be punched out on cards suitable to be used for input for a subsequent case.

The program flow then returns to the call to INPUT for the next case.

The input data consist of:

1. Case identification.
2. Tube factors; number, spacing, etc.
3. Coolant factors; flow, temperature, concentration, etc.
4. Steam factors; flow, temperature, etc.
5. Type of noncondensable.
6. Geometry control factors.
7. Exit steam fraction desired.
8. Various control flags needed to control flow of program.

DESCRIPTION OF MAIN PROGRAM AND SUBROUTINES

The following Sections contain commented descriptions of ØRCØN1 subroutines. The FORTRAN equations which require explanations are listed in order of occurrence, accompanied by a brief discussion or comment. A listing of the entire program is given in Appendix B.

MAIN

Throughout the program variables are adjusted as needed for the model of condenser chosen. Since the calculations of geometry are based on a full circle, the number of tubes is increased to fill the circle and all associated parameters are correspondingly adjusted. In the output, the values are corrected to fit the input model.

The number of rows is initially estimated with the following equation:

$$\text{NØRØWS} = \sqrt{\text{TNØ} * 1.1035/2.0}$$

where

NØRØWS is the number of circular rows of tubes.

TNØ is the total tube count for a full circular condenser (does not include cooler tubes).

This is derived by assuming the tubes fill the entire tube sheet area.

The number of tubes is then calculated for each row and summed. If not all the tubes are accounted for when all rows are filled, a row is added and the summation repeated. All sectors of the bundle are assumed to be identical.

The code then proceeds through an algorithm for finding the number of tubes in a vertical row above the central tube in each row. This is done for six sectors, i.e., one side of the bundle. Symmetry is assumed for the other side.

An initial estimate is made of the exit coolant temperature for future reference.

$$\text{STB2ES} = \frac{\text{WSI} * \text{HFG}}{\text{WBI} * \text{CPB}} + \text{STBI}$$

A function subroutine provides specific volume of steam; the specific volume of the noncondensable gas is found by using the perfect gas law; the specific volume of the mixture is then found by:

$$SVMIX1 = \frac{1.}{\frac{AMØLSS}{AMØLST * VG1} + \frac{AMØLNC}{SVNC1 * AMØLST}}$$

Inlet steam and noncondensable flows to the first row of each sector are given a non-uniform distribution in an effort to shorten running time in subroutine SECALC. This is done because the subroutine systematically alters flow to each sector until a uniform pressure drop is reached across all sectors.

Entrance and velocity change losses are calculated in order to fix the pressure of the steam in the first row of tubes.

MAIN then calls SECALC to calculate the condenser parameters. Following this call, the conditions at the exit from the condenser (entrance to the cooler) are found, and then MAIN calls CØØLEX to calculate the cooler parameters.

It should be noted that the values for number of tubes, steam flow, etc. for the cooler are exact, whereas for the condneser this would be true only for the six sector symmetrical model.

After the cooler parameters are calculated, subroutine ADJUST is called. This subroutine checks the exit steam fraction against the input value and adjusts the inlet steam flow, or tube length, to get a closer agreement with the input value of EXITFR.

When agreement is reached (if EXITFR = 0, then the above is bypassed), the output subroutine, ØUTP1, is called and the results are printed out.

SECALC

This subroutine finds all the parameters of the sectors of the condenser. A simplified flow chart of the program is illustrated in Figure 4. From an inspection of this chart we see two major DØ loops with one nested in the other. The outer loop cycles through however many sectors are in the condenser model. The inner loop cycles through the rows in the sectors.

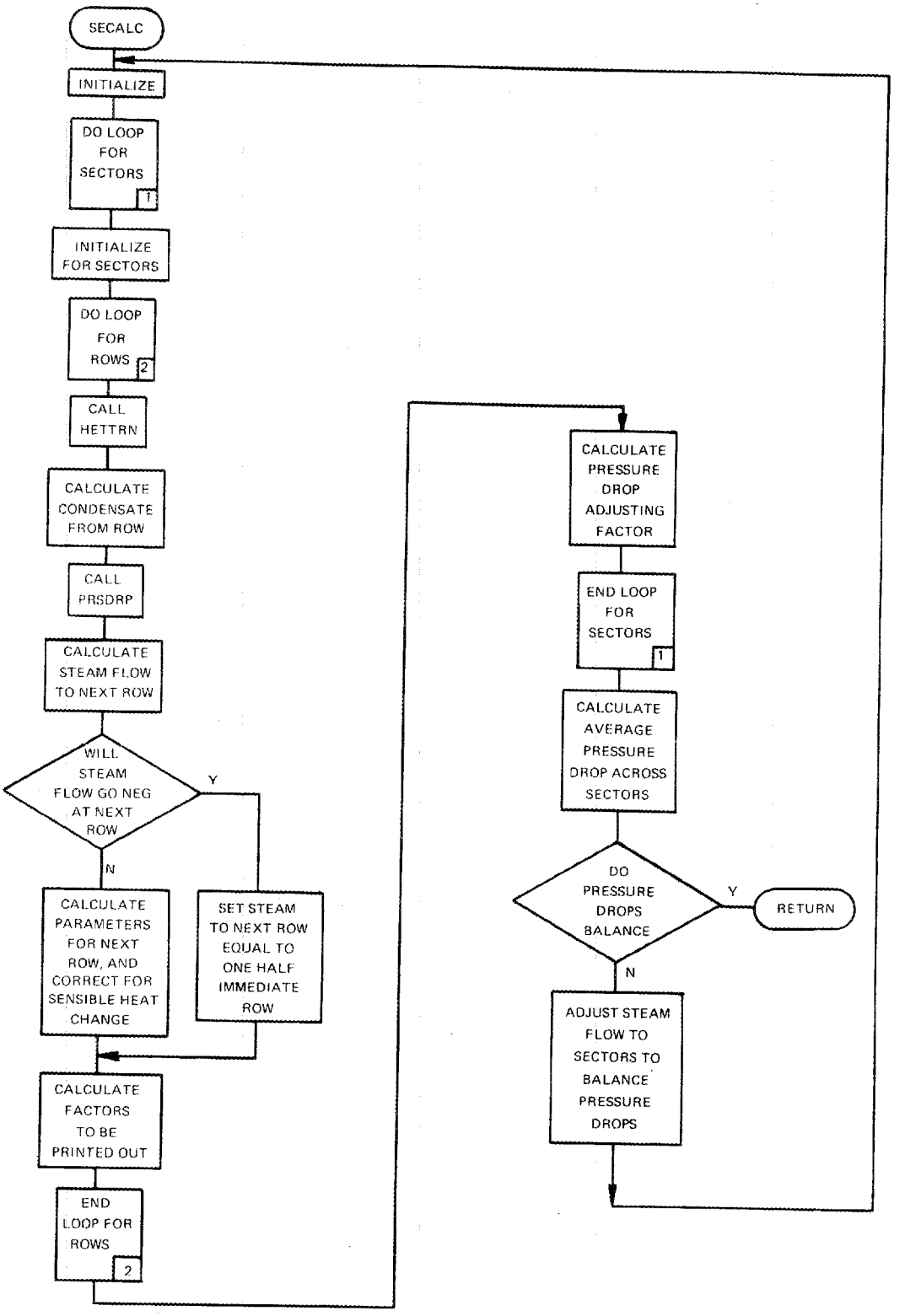

FIGURE 4. FLOW CHART FOR SUBROUTINE SECALC

A few variables are initialized prior to entering the first loop, then the loop is entered and the pressure, temperature, and velocity of the steam mixture in the first row of tubes are calculated.

The inner loop is then entered and immediately subroutine HETTRN is called, primarily to determine the overall coefficient of heat transfer for the row of tubes designated by the DØ loop index.

An initial value of condensate is then found,

$$WCND(I,J) = \frac{UN(I,J) * A\emptyset * ALMTD(I,J) * TBNPR(I)}{HFG}$$

where

UN(I,J) is the overall heat transfer coefficient.

ALMTD(I,J) is the log mean temperature difference.

Both of these values are returned by subroutine HETTRN. Subroutine PRSDRP is then called to return a value for pressure drop across the row of tubes indicated by the inner loop index.

A test is made to check for the possibility of the total condensate exceeding the steam flow. If this is found to occur, the code arbitrarily sets the condensate to half of the steam flow and then back calculates the needed variables.

If steam flow does not go negative, then the condensate is corrected for sensible heat change, i.e.,

$$WCNDP = \left[UN(I,J) * A\emptyset * ALMTD(I,J) * TBNPR(I) - \frac{WS(I,J) * CPS}{18.015} + \frac{WNC * CPA}{AMWNC} * (TAL - TSAT) \right] / HFG$$

where

CPS and CPA are the heat capacities of steam and noncondensables, Btu/lb-°F

and 18.015 is the molecular weight of steam.

The inner loop is closed out after calculating the remaining needed variables, and summing a number of factors needed for averages in ØUTP1.

At the end of the outer loop the following factor is calculated:

$$C(J) = [WS(I,J) + WGAS(J)] / \sqrt{DELP(J)}$$

which is used in the adjustment of steam to the sectors. The expression is derived through cancellation of invariants in the dimensionless constant,

$$\frac{\Delta P * 288.1 * g_c * Sp.Vol.}{VEL^2}$$

The shorter expression saves computing time and core volume.

The average pressure drop across the sectors is then found and the individual pressure drops are tested against the average. The requirement is for a plus or minus 1 percent. If the test fails, the inlet steam to each sector is readjusted.

The new steam flow is initially estimated by:

$$WSP(J) = \frac{C(J) * \sqrt{DELPVE * WSI}}{WSI + WNCI}$$

A further adjustment is made to prevent oscillations or overshoot and speed up conversion to target. The adjustment is made by use of the expression:

$$WSP(J) = WS(1,J) \pm \frac{\sqrt{|WS(1,J) - WSP(J)|} * \{WS(1,J)\}^{0.26}}{2.}$$

The total flow of inlet steam is kept precisely constant by omitting recalculating inlet steam to the sector that diverged from the average, the greatest amount and directing remaining unassigned flow to that sector.

Following adjusting of steam to the sector, control is directed to the early initialization and the entire procedure is repeated.

CØØLEX

This subroutine finds all the parameters for the cooler, if one is specified in the model. A simplified flow diagram of this subroutine is given in Figure 5.

The cooler is assumed to be of rectangular cross section with steam entering the bottom row of tubes and proceeding vertically through the bundle.

After initializing a few variables, the steam velocity at minimum cross section in the first row of tubes is calculated and checked to assure its being less than a predetermined value in VLCMAX. If the steam velocity exceeds this limit, then the number of tubes per row is recalculated to reduce the velocity to within limits. The number of rows of tubes is correspondingly reduced to maintain a constant total number of tubes in the cooler.

The rows of tubes in the cooler are treated in a directly parallel manner to the rows in a sector of the condenser in subroutine SECALC.

HETTRN

The primary purpose of this subroutine is to supply the log mean temperature difference and overall heat transfer coefficient for a row of tubes to the calling program. It is called by subroutine SECALC for each row in each sector of condenser tubing and by subroutine CØØLEX for each row of gas cooler section tubing. The theoretical basis of this subroutine is given in Appendix A, and a flow chart is given in Figure 6.

On entering this subroutine, a series of estimates and constants for the rows of tubes is calculated. Among these are the vapor viscosity, and modified mass transfer factor:

$$\text{AVIS} = \frac{\text{SMUFN(TSAT)} * \text{RMWSC} + \text{AMUFN(TSAT,JGAS)} * \text{RMWNC}}{\text{RMWSC} + \text{RMWNC}}$$

SMUFN and AMUFN are function subroutines for determination of the viscosity of steam and noncondensables, respectively.

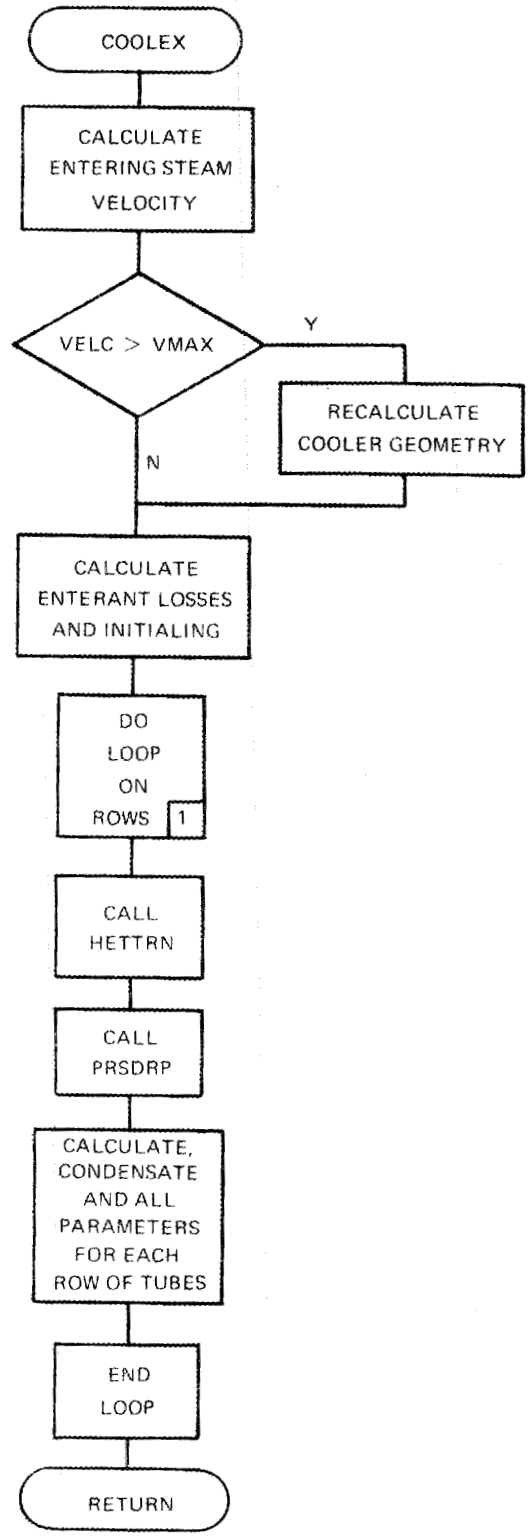

FIGURE 5. FLOW CHART FOR SUBROUTINE CØØLEX

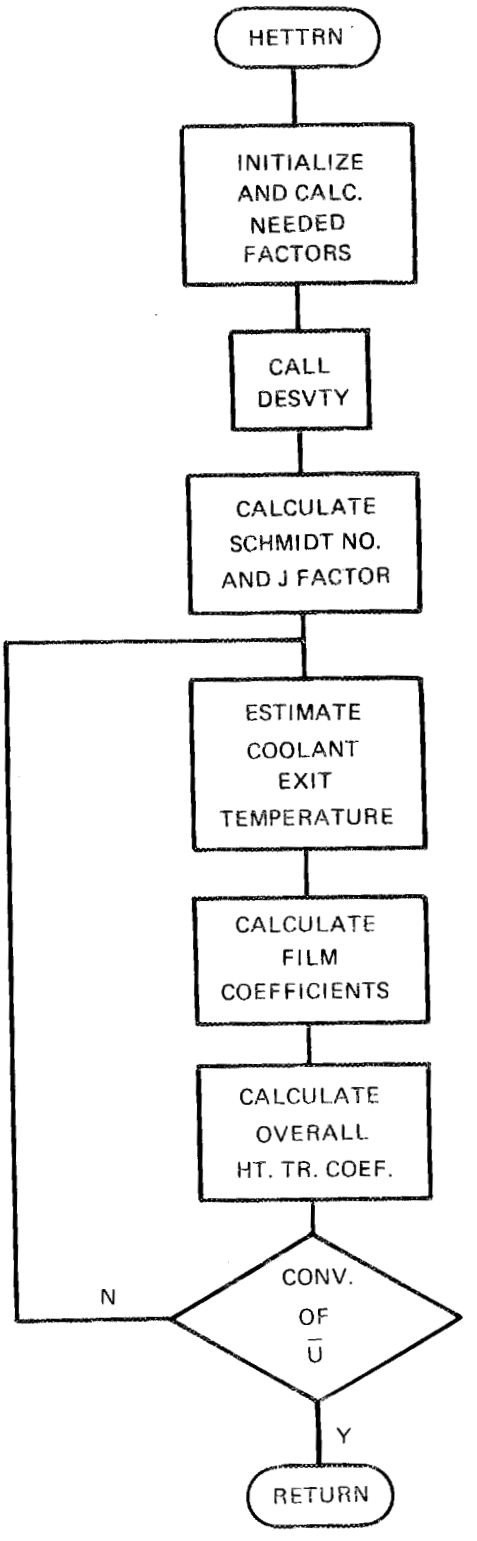

FIGURE 6. FLOW CHART FOR SUBROUTINE HETTRN

The mass transfer factor j_m is defined by:

CØLBJ = EXP(0.53883 - 0.544 * ALØG(XNRE))

A call to subroutine DFSVTY follows in order to get the diffusivity of the noncondensable gas into steam, a value needed to calculate the Schmidt Number, which in turn is needed to find the mass transfer coefficient.

The Schmidt Number (dimensionless) is:

$$XNSCH = 928.8 * \frac{AVIS * TSAT * 10.73}{(PSAT + PGB) * AMWAV * DG}$$

where

PGB is partial pressure of the gas.
DG is diffusivity returned by DFSVTY.
AMWAV is the mass weighed average molecular weight of the steam and noncondensable.

The factor, CJ, is the product of the mass transfer coefficient with the partial pressure, PGB, and is found by,

$$CJ = CØLBJ * GMAX/XNSCH^{2/3}$$

which is used later to find the overall heat transfer coefficient.

At Fortran statement 40 an iterative simultaneous calculation of the heat transfer coefficient, the temperature drop across the condensate film, and the temperature drop across the noncondensables film (if any) is begun.

The outlet coolant temperature is found by solving the equation for heat transferred to the coolant, namely

$$WB * CPFN(CBI,STBAVE) * (TB2 - STBI) = VEST * AØ * \frac{(TB2 - STBI)}{\ln\left(\frac{STSAT-STBI}{STSAT - TB2}\right)}$$

for

$$TB2 = STSAT - \frac{STSAT - STBI}{EXP\left(\frac{UEST * A\emptyset}{WB * CPFN(CBI,STBAVE)}\right)}$$

where the rightmost term is the log mean temperature difference.

CPFN is a function subroutine to calculate the specific heat of the coolant, and

UEST is the estimated heat transfer coefficient.

The tube internal film coefficient is found using the Colburn form of the convective film heat transfer correlation,

$$SHI = 0.023 * XNREB^{0.8} * XNPRB^{1/3} * \frac{SKB}{SDI} * ENHI$$

where

$$XNREB = \frac{SDI * BB}{BMU}$$

is the Reynolds number in the coolant, and

$$XNPRB = \frac{SHBI * BMU}{SKB}$$

is the Prandtl number for the coolant, and

ENHI is an enhancement factor for heat transfer; equal to 1.0 for smooth tubes.

The condensate film coefficient is found, first without correction for flooding (Nusselt equation),

$$SHNK = 0.725 \left[\frac{SKB\emptyset^3 * R\emptyset EFN(0.,STF\emptyset)^2 * HFGFN(STF\emptyset) * g_L}{BMUFN(0,STF\emptyset) * SD\emptyset * DELFLM}\right]^{1/4} * ENH\emptyset$$

where

g_L is acceleration due to gravity, ft/sec.^{2}

The film coefficient is corrected for condensate rain in either of two ways, depending on the value of FDAVE provided in the input data.

I. If FDAVE < 0.

$$SHNF = 0.95\ [BNF^{0.9} - (BNF-1)^{0.9}]\ SHMK, \text{ or}$$

II. If FDAVE > 0, the condensation rain factor for a tube in the BNF-th row is

$$SHNF = SHMK\ [BNF * FDAVN - (BNF-1) * FDAVM]$$

where the average factor for the tubes in rows 1 through BNF is

$$FDAVN = 0.6\ FDAVE + \frac{(1. - 0.5647FDAVE)}{BNF^{0.2}}$$

and the average factor for tubes in rows 1 through (BNF-1) is

$$FDAVEM = 0.6\ FDAVE + \frac{(1. - 0.5647FDAVE)}{(BNF - 1.)^{0.2}}$$

The factor, RFACT, is a sum of the thermal resistances, less that due to the gas film, and is used later in the program. (If no gas is present, the reciprocal of this value is the calculated value of the overall heat transfer coefficient.)

The log mean temperature difference, ALMTD, is then found for use in this subroutine and in the calling program.

Separate Fortran statements are provided for the reat of the calculation for cases with no noncondensables (ending just before Fortran statement 110) and for cases with noncondensables starting at statement 110. For noncondensables the procedure is as follows.

The factor, DTDP, is the differential form of $\Delta T/\Delta P$ across the gas film. It is found by differentiating $P = f(T)$ and taking the reciprocal.

$$PRESS(ABS) = 2.718\ **\ [14.15012 - 6452.562/T - 837533./T^2]$$

therefore $$DTDP = \frac{1}{\frac{d(PRESS)}{dt}}\ .$$

The factors BØNE and CØNE are the constant terms in a quadratic equation (Eq. 11a, Appendix A) for the overall heat transfer coefficient. These were used to solve for the coefficient which is tested against the previous estimate.

The gas film coefficient is backed out of the expressions above, i.e.,

HEFF = UTEST/(1. - UTEST * RFACT)

When there are no noncondensables this last computation is of course omitted. In either case the film temperature drops are calculated and tested against previous estimates for convergence. The program cycles until all estimates coverage before returning to the calling program.

INPUT

This subroutine reads input data, prints an image of the input array and then prints a description of the input variable. Also, if the inlet coolant temperatures are read in or transferred from a preceding stage, these are printed out. A flow chart is given in Figure 7.

Figure 8 shows the input card layout. The variables are,

Card 1, (FORMAT: I1, 19A4, A3)

IR Indicator for added number of cards to be read (column 1 only)

IR = 0, 4, or >5; then all cards will be read in proper order.

IR = 1. Only card 5 will be read.

IR = 2. Cards 5 and 4 will be read (cards 2 and 3 will be skipped).

IR = 3. Cards 5, 4 and 3 will be read (card 2 will be skipped).

INDENT All the remaining columns of the first care are available for identification or notes, 79 columns

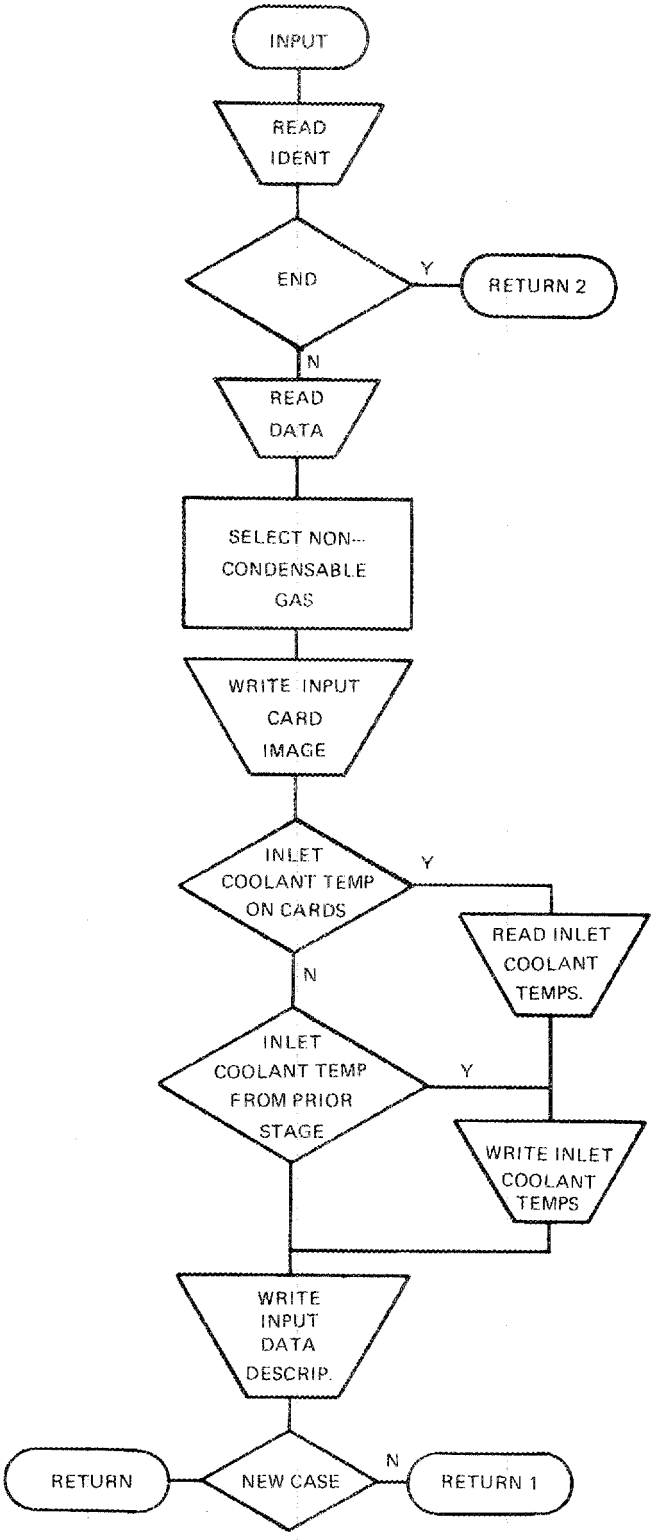

FIGURE 7. FLOW CHART FOR SUBROUTINE INPUT

Card 2, (FØRMAT: 7F10.0, 2I5)

ANTP	Total number of tubes in the bundle (includes cooler).
PRCCLR	Percent of tubes in the cooler.
SDD	Ratio of tube spacing to tube diemeter of condenser section.
SDDMIN	Ratio of tube spacing to tube diameter for cooler section.
ØD	Outer diameter of all tubes, in.
XW	Wall thickness of tubes, in.
SKW	Thermal conductivity of tube material, Btu/hr-ft^2-°F/ft.
NRWSP	Number of rows of condenser coolant inlet temperatures to be read (use <u>only</u> to read punched card inlet coolant temperatures, set = 0 otherwise).
NRWSCP	Same as NRWSP except for cooler.

Card 3, (FØRMAT: 8F10.3)

WBI	Total coolant flow to condenser (cooler included), lb/hr.
VELBIP	Coolant velocity, ft/sec. (Note: WBI and VELBIP are exclusive variables, one of them should be set to zero. If not, then VELBIP will override WBI).
CBI	Coolant concentration.
STBIP	Coolant inlet temperature, °F. (Note: STBIP is used only if inlet coolant temperatures are not read in or transferred.)
FØUL	Tube fouling factor.
ENHI	Tube internal enhancement factor.

Card 4, (FORMAT: 5A1, 7F5.2, 4I5)

GAS	Type of noncondensable gas, must be one of AIR, CØ2, or MIX.
SECFLG	Bundle model indicator, gives number of 30° sectors in one-half of a symmetrical bundle, or total sectors in a semicircular bundle.

HFCDFL Symmetry indicator.

If = 1, model will have symmetry about a vertical centerline.

If = 0, model will be a semicircular type.

RADFLG Factor to increase bundle radius beyond that normally calculated by the code (will enlarge center void).

BAFFLE Flag to indicate presence of baffles at 2 and 4 o'clock.

FDAVE Tube spacing parameter. Used in subroutine HETTRN to modify effect of condensate flooding.

EXITFR Target value for vented steam as a percent of input. If EXITFR = 0.0, then program will make a single pass and return the results without any adjustments.

ØUTPUT Control flag to restrict amount of detail printed out.

ØUTPUT = 1.0 gives full detail of all sectors.

ØUTPUT = 0.0 prints only summary.

INSTM Flag to direct program flow when converging on vent steam target.

INSTM = 1, inlet steam adjusted.

INSTM = 0, tube length adjusted.

ITRAN Flag to direct code to use outlet coolant temperatures from immediate preceding run (used only when multiple stages are run together) for inlet temperatures of current stage.

ITRAN = 1, use transferred temperatures.

ITRAN = 0, do not use transferred temperatures.

IFLØAT Flag to give option of having detail output in floating point form; one gives floating point, zero gives fixed point.

IPNCH Outlet coolant temperatures will be punched for input if IPNCH $\neq$ 0.

Card 5, (FORMAT: 8F10.3)

WSI	Steam flow to condenser, lb/hr.
WNCI	Noncondensable gas flow to condenser, lb/hr.
STSAT1	Inlet steam temperature, °F
ALST	Tube length, ft.
ENHØ	Tube outer enhancement factor for heat transfer.
ENHF	Friction factor enhancement factor for use in calculation of pressure drop in the steam.

ØUTPUT

The ØUTPUT subroutine handles the principal output from the run. First, average inlet and outlet coolant temperatures are calculated for the condenser and the cooler. These these averages overall log mean temperature differences, DTCND2, DTCOL2, and DLTOT2, are calculated for the condenser, cooler and overall, respectively, using inlet steam temperatures. From this, the overall heat transfer coefficients, UPCOND, UPCOOL, UPAVG, are found for the condenser, cooler, and entire bundle. In addition, a row-by-row average of the heat transfer coefficients (UBARW, UBARWC, UAVGW, respectively) is made, and the log mean temperature differences (ADTCND, ADTCLR, ADTOA, respectively) are back calculated.

The option exists to print only the summary of results, or to have the summary plus two pages of detailed results for each sector.

In event of an error condition existing when the ØUTPUT subroutine is entered, the above calculations will be omitted and only the detailed output will be printed.

The option is available to specify the format for the detailed output. For simplicity of reading, fixed point format is recommended. Floating point format can be specified by setting IFLØAT = 1 on input for a run, and this will result in the detail being printed to five figures for all results printed out.

CARD 1 (I1, 19A4, A3)

1	2	80
TR	CASE IDENTIFICATION	

CARD 2 (7F10.0, 2 I 5)

10	20	30	40	50	60	70	75	80
ANTP	PRCCLR	SDD	SDDMIN	OD	XW	SKW	NRWSD	NRWSCP

CARD 3 (6F 10.3)

10	20	30	40	50	60	
WBI	VELBI	CBI	STBI	FOUL	ENWI	

CARD 4 (5A1, 7F5.2, 4 I 5)

5	10	15	20	25	30	35	40	45	50	55	60	
GAS	SECFLG	HFCDFL	RADFLG	BAFFLE	FDAVE	EXITFR	OUTPUT	INSTM	ITRAN	IFLOAT	IPNCH	

CARD 5 (6F10.3)

10	20	30	40	50	60		
WSI	WNCI	STSNT1	ALST	ENHO	ENHI		

FIGURE 8. INPUT CARD LAYOUT

ADJUST

In the event an exit fraction of steam is specified in the input list, then this subroutine is called to test the calculated exit steam fraction against the input value. If the calculated value is not within five percent of the input value, then a new value of either inlet steam or tube length is calculated and returned to the calling program for another loop on the entire program. The actual calculation of the new value is done in function subroutine XTR.

As the program proceeds through a series of loops in an effort to find an acceptable value of WSI or ALST, minimums and maximums are set up so that any new value returned will always be above a previous minimum and below a previous maximum, e.g.,

If WS1 is less than WSIMIN, then the code recalculates WSI as

WSI = WSIMIN * (1.0 + 0.01/IWS).

DFSVTY

Subroutine DESVTY returns the value of mutual diffusivity of the steam and the noncondensable gas present. The equations are drawn directly from the Chemical Engineers Handbook, 4th Edition, R. H. Perry, 14-20, 1963.

XTR

This is a function subroutine that transforms the calculated data, received in the argument list, to the log values and performs a linear regression on two or more points, but no more than the last 4 points. The model chosen for the regression is,

Ln Y = A + B Ln X

where

X is controlled variable, WSI or ALST.

Y is calculated exit fraction of steam.

Constants A and B are found through standard least square procedures. Then using the target value for Y, a new value for X is calculated. After checking to limit any change to 10 percent, the value is returned to the calling program.

PRSDRP

This subroutine returns the shell side pressure drop across a row of tubes.

The pressure drop is found from

$$DELPTP = \frac{SF * GSTAR^2 * VMIX}{72. * SG}$$

where the friction factor is

$$SF = 0.102 + \frac{52.2}{ANRE} \quad ENHF$$

ANRE = Reynolds number in the vapor.

and GSTAR is the mass flow rate at the smallest cross section of area open to flow.

CPSFN

This function subroutine calculates the heat capacity of steam in Btu/lb-mol-°F, given T in degrees R. The equation is based on tabulated values in a NASA report, TR-R-132.

$$SBSFN = 7.838 - 0.0002531 * T + 0.2892 * 10^{-6} * T^2 - 0.7693 * 10^{-10} * T^3$$

AKAFN

This function subroutine calculates the thermal conductivity of the non-condensable gas in Btu/ft-hr-°R. The gas is assumed to be either air, CO_2, or a mixture of the two.

For air:

$$GAS1 = 0.01\ (-0.026 + 0.003266T - 0.8271 * 10^{-6}T^2 + 0.1251 * 10^{-9}T^3).$$

For CO_2:

$$GAS2 = -0.00392 + 2.792 * 10^{-5}T - 2.316 * 10^{-9}T^2$$

For the mixture an average of GAS1 and GAS2 is taken.

AMUFN

This function subroutine calculates the viscosity of the noncondensable gas in lb/ft-sec. Again, distinction is made among air, CO_2, or a mixture of air and CO_2.

For air

$$GAS1 = 10^{-5}[0.1490 + 0.238 \times 10^{-2}T - 0.7209 * 10^{-6}T^2 + 0.1184 * 10^{-9}T^3]$$

For CO_2

$$GAS2 = 10^{-5}[-0.046 + 2.282 \times 10^{-3}T + 6.131 \times 10^{-7}T^2 + 9.699 \times 10^{-11}T^3]$$

and the mixture is the average of the above.

BMUFN

This function subroutine calculates the viscosity of a saline solution in the ranges of 0 - 24 percent concentration and 40 - 210°F in lb/hr-ft.

$$BMUFN = EXP\ [-11.591155 * C + 0.012602329 * C * R + 3863.7378 * C/R + 0.004606532 * R + 4759.5941/R - 10.59252566]$$

where

C = concentration

R = temperature in degrees Rankine.

CPAFN

This function subroutine returns a value for the heat capacity of the inert gas assumed in the steam. Given in Btu/lb-mol-°F.

For CO_2

$$CPAFN = 0.209 * 40.1$$

For air

$$CPAFN = 7.139 - 0.0009884 * T + 0.1393 * 10^{-5} * T^2 - 0.3367 * 10^{-9} * T^3$$

where

T = temperature in degrees Rankine.

For a mixture, the above two values are averaged.

CPFN

This function subroutine calculates the specific heat of a saline solution, Btu/lb-°F

For concentration less than 0.005,

$$CPFN = 1.0121559 - 0.00024618473 * T + 0.10282155 * 10^{-5} * T^2$$

and for concentration greater than 0.005

$$CPFN = 0.96946859 + 0.0002080992 * T - 0.9119929 * C - 0.0012965932 * C * T - 1.555779 * C^2 + 0.015444294 * C^2 * T + 6.7981008 * C^3 - 0.025220708 * C^3 * T$$

where

C = concentration

T = temperature in degrees F.

HFGFN

This function subroutine returns a value for the latent heat of vaporization of water in Btu/lb.

$$HFGFN = 1093.88 - 0.5703 * T + 0.00012819 * T^2 + 0.0000008824 * T^3$$

where

T = temperature in degrees F.

PSATFN

This function subroutine calculates the pressure of steam as a function of temperature, pressure in psi absolute.

$$PSATFN = EXP[14.150119 - 6452.5621/T - 837533.21/T^2]$$

with

T = temperature in degrees Rankine.

RØEFN

This function subroutine calculates the density of a saline solution of concentration range 0 - 24 percent and temperature ranges of 40 - 300°F; given in lb/cu ft.

$$RØEFN = 62.707172 + 49.364088 * C - 0.0043955304 * T - 0.032554667 * C * T - 0.000046076921 * T^2 + 0.000063240299 * C * T^2$$

where

C = concentration.

T = temperature in degrees F.

SKBFN

This function subroutine calculates the thermal conductivity of a saline solution of concentration range of 0 - 24 percent and temperature range of 40 - 300 degrees F. Conductivity is in Btu/hr-ft^2-°F-ft.

$$SKBFN = [-0.1687109 * C + 1.0] * [0.30157913 + 0.000697989 * T - 0.12506 * 10^{-5} * T^2 - 0.2072 * 10^{-10} * T^3]$$

with

C = concentration

T = temperature in degrees F.

SMUFN

This function subroutine calculates the viscosity of steam in lb/ft-sec.

$$SMUFN = [0.122 + 0.0001001 * T + 2.892 * 10^{-7} * T^2 - 7.693 * 10^{-11} * T^3] * 10^{-5}$$

where

T = temperature in degrees Rankine.

TSATFN

This function subroutine returns a value for temperature of steam in degrees Rankine, given an absolute pressure. The equation for pressure as a function of temperature is solved for temperature as a function of pressure by use of the quadratic formula. The larger of the two solutions is selected to be returned.

VGFN

This function subroutine calculates the specific volume of steam as a function of temperature and pressure in cu ft per lb.

$$VGFN = EXP\ [-0.72240 + 1.10267 * X - 0.0177861 * X^2 + 0.00103758 * X^3]$$

where

$X = \ell n\ (T/P)$

T = temperature in degrees R

P = pressure in psi absolute.

USAGE

Operating Instructions

ØRCØN1 is a moderately sized program which requires 150 K of core volume to operate. This can be reduced to 114 K with appropriate overlay.

The code consists of a main program, eight subroutines and 14 function subroutines. No tapes, discs, drums or data cells are programmed for operation. All input is by punched card and output is on a standard printer (except for outlet coolant temperature punched out when desired). There are no built-in pauses or stops.

Input

Example

To illustrate the use of ØRCØN1, a sample problem is included. The variables used as input data are as follows:

Card 1

IR = 4

IDENT = 79 Alpha-Numeric characters.

Card 2

ANT = 5000	XW = 0.0350
PRCCLR = 7.0	SKW = 26.0
SDD = 1.333	NRWS = 0 (Col. 75)
SDDMIN = 1.333	NRWSC = 0 (Col. 80)
ØD = 0.75	

Card 3

WBI = 17000000.	STBI = 93.0
VELBI = 0.0	FØUL = 0.0005
CBI = 0.06	ENHI = 1.0.

Card 4

GAS = AIR	EXITFR = 0.50
SECFLG = 6.0	OUTPUT = 1.0
HFCDFL = 1.0	INSTM = 1
RADFLG = 1.0	ITRAN = 0
BAFFLE = 1.0	IFLØAT = 1
FDAVE =-1.0	IPNCH = 0

Card 5

WSI = 56000	ALST = 11.33
WNCI = 5.0	ENHØ = 1.0
STSAT1 = 106.0	ENHF = 1.0

The output for this case is given in Figures 9 and 10.

Description of the Computer Output

In Figures 9 and 10 are shown examples of the output pages from the condenser code ORCON. Figure 9 is the summary tabulation and lists the overall performance information for the condenser section of the tube bundle and for the gas cooler section separately and then combined or overall.

The area averaged or area weighted heat transfer coefficients for the condenser, the gas cooler and the combined or overall are used, together with the amount of heat removed in these respective portions of the condenser bundles to arrive at the "back calculated" log mean Δt. This Δt_m reflects the loss in thermal driving force due to the pressure drop encountered by the vapor flowing through the bundle. Pressure drops and temperature drops are simply the difference between the values entering the first row and exiting the last row as obtained from the row-by-row calculations.

The Exit Steam, Per Cent of Input, shows the amount of steam which passes on to the vent system after having passed through all the rows of tubes in the bundle and represents the value which was arrived at by varying the entering vapor flow. The vapor flow rate which satisfied the target value for the exit or vent rate is labeled "steam to the condenser." The

CIRCULAR CONDENSER INPUT DATA

CARD 1 CASE IDENTIFICATION AND NOTES
CIRCULAR CONDENSER 6 SECTOR MODEL SAMPLE PROBLEM FOR REPORT

CARD 2	ANT	PRCCLR	SDD	SDDMIN	OD	XW	SKW	NRWS	NRWSC
	5000.	7.00	1.3330	1.3330	0.7500	0.0350	26.00	0	0

CARD 3	WBI	VELBI	CRI	STBI	FOUL	ENHI
	17000000.	0.0	0.06000	93.0000	0.00050	1.000

CARD 4	GAS	SECFLG	HFCDFL	RADFLG	BAFFLE	FDAVE	EXITFR	OUTPUT	INSTM	ITRAN	IFLOAT	IPNCH
	AIR	6.00	1.00	1.00	1.00	-1.00	0.50	1.00	1	0	1	0

CARD 5	WSI	WNCI	STSATI	ALST	ENHO	ENHF
	56000.	5.00	106.000	11.330	1.000	1.000

CASE IDENTIFICATION AND NOTES **** CIRCULAR CONDENSER 6 SECTOR MODEL SAMPLE PROBLEM FOR REPORT

GEOMETRY SPECIFICATION

NO. OF TUBES	5000.00
PCT. TUBES IN COOLER	7.00
LENGTH OF TUBES, FT.	11.33
S/D, CONDENSER	1.333
S/D COOLER	1.333
BUNDLE RADIUS FACTOR	1.00
SECTOR MODEL	6.00
BAFFLE FLAG	1.00
SYM. FLAG	1.00

TUBING SPECIFICATION

OUTSIDE DIAM., INCHES	0.7500
WALL THICKNESS, INCHES	0.0350
WALL COND.,BTU/HR/SQ.F/DEG.F.	26.0000
FOULING FACTOR	0.0005
TUBE FLOOD FACTOR(FDAVE)	-1.0000
ENHANCEMENT FACTORS	
INSIDE FILM	1.0000
OUTSIDE FILM	1.0000
FRICTION FACTOR	1.0000

FLOW AND PROPERTIES SPECIFICATION

STEAM FLOW, LBS/HR	56000.
COOLANT FLOW, LBS/HR.	17000000.
COOLANT VELOCITY, FT/SEC.	0.0
STEAM TEMP., DEG. F.	106.00
COOLANT TEMP., DEG. F.	93.00
WT. FRAC. OF NACL IN COOLANT	0.06000
EXIT STEAM FRACTION,PCT. OF INPUT	0.50
NON-CONDENSIBLE FLOW, LB/HR.	5.00

FIGURE 9. SAMPLE OUTPUT SUMMARY TABULATION
Contd.

```
REYNOLDS NUMBER IN CONDENSER ON SHELL SIDE HAS FALLEN BELOW 100,  RENO =    0.858240E 02 SECTOR    5  ROW     34
    0 WSIOLD = 55999.992  XTFR1 = 0.0035 WSI =  56407.957
REYNOLDS NUMBER IN CONDENSER ON SHELL SIDE HAS FALLEN BELOW 100,  RENO =    0.244728E 02 SECTOR    6  ROW     33
    1 WSIOLD = 56407.945  XTFR1 = 0.0130 WSI =  56203.969
REYNOLDS NUMBER IN CONDENSER ON SHELL SIDE HAS FALLEN BELOW 100,  RENO =    0.980688E 02 SECTOR    6  ROW     32
    2 WSIOLD = 56203.969  XTFR1 = 0.0082 WSI =  56101.980
REYNOLDS NUMBER IN CONDENSER ON SHELL SIDE HAS FALLEN BELOW 100,  RENO =    0.818724E 02 SECTOR    6  ROW     32
    3 WSIOLD = 56101.969  XTFR1 = 0.0059 WSI =  56027.906
REYNOLDS NUMBER IN CONDENSER ON SHELL SIDE HAS FALLEN BELOW 100,  RENO =    0.916178E 02 SECTOR    5  ROW     34
    4 WSIOLD = 56027.906  XTFR1 = 0.0042 WSI =  56062.063
REYNOLDS NUMBER IN CONDENSER ON SHELL SIDE HAS FALLEN BELOW 100,  RENO =    0.985895E 02 SECTOR    5  ROW     34
        CONVERGENCE CRITERIA MET FOR EXIT STEAM
 COOLER EXIT STEAM FRAC.  0.0049      ACTUAL TUBES IN CONDENSER  4638.0  ACTUAL TUBES IN COOLER    362.0
```

FIGURE 9. SAMPLE OUTPUT SUMMARY TABULATION
Continuation

CIRCULAR CONDENSER 6 SECTOR MODEL SAMPLE PROBLEM FOR REPORT

SUMMARY OF RESULTS

	AREA AVERAGE U, BTU/HR/SQ.FT. /DEG. F.	BACK CALC. LOG MEAN DELTA TEMP, DEG.F.	PRESSURE DROP LBS/SQ.IN.	TEMP. DROP DEG.F.	STEAM VELOCITY FT/SEC INLET	STEAM VELOCITY FT/SEC OUTLET	TUBE SPACING RATIO, S/D	TUBE FRACTION PERCENT	HEAT REMOVED, MILLION BTU/HR	HEAT TRF. SURFACE, SQ.FT.
CONDENSER	494.43	10.5770	0.0231	0.7246	86.35	33.71	1.333	92.76	53.9581	10317.96
COOLER	494.50	9.3937	0.0353	1.4492	127.00	13.13	1.333	7.24	3.7405	805.25
OVERALL	494.43	10.4913	0.0703	2.5398					57.6986	11123.21

OUTSIDE BUNDLE DIAM., FT. 6.08 INSIDE VOID DIAM., FT. 1.15 NUMBER OF RADIAL TUBE ROWS 34.

COOLER HEIGHT, FT. 2.44 COOLER WIDTH, FT. 0.98 BUNDLE LENGTH, FT. 11.330

EXIT STEAM, PERCENT OF INPUT 0.49 EXIT NON-CONDENSIBLES, PERCENT OF TOTAL EXIT FLOW 1.77

	AVG. BRINE TEMPS ENTRANCE	AVG. BRINE TEMPS EXIT
CONDENSER	92.9988	96.6872
COOLER	92.9998	96.2652
OVERALL	92.9989	96.6301

FLOWS LBS/HR	
STEAM TO CONDENSER	56062.
COOLANT TO BUNDLE	16999984.
COOLANT VELOCITY	5.7868 F/S
CONDENSATE FROM CONDENSER	52172.
CONDENSATE FROM COOLER	3613.

DTCND2	UPCOND	DTCOL2	UPCOOL	DLTOT2	UPAVG
11.0546	473.0637	10.4481	444.5901	11.0865	467.8848

FIGURE 9. SAMPLE OUTPUT SUMMARY TABULATION
Continuation

CIRCULAR CONDENSER 6 SECTOR MODEL SAMPLE PROBLEM FOR REPORT J = 1

	STSAT	PMIX	WS	VEL	RC	UN	SHNF	SHI	1/ROUT
1	1.0589E 02	1.1311E 00	4.7064E 03	8.6984E 01	8.9171E-05	5.2973E 02	3.1512E 03	1.1578E 03	3.1507E 03
2	1.0585E 02	1.1297E 00	4.4754E 03	8.5108E 01	9.3773E-05	5.2964E 02	3.1485E 03	1.1578E 03	3.1480E 03
3	1.0581E 02	1.1284E 00	4.2507E 03	8.2969E 01	9.8729E-05	5.1246E 02	2.6277E 03	1.1573E 03	2.6273E 03
4	1.0577E 02	1.1271E 00	4.0381E 03	8.0947E 01	1.0393E-04	5.1240E 02	2.6264E 03	1.1573E 03	2.6259E 03
5	1.0574E 02	1.1259E 00	3.8315E 03	7.8929E 01	1.0953E-04	5.0583E 02	2.4633E 03	1.1571E 03	2.4629E 03
6	1.0570E 02	1.1248E 00	3.6330E 03	7.6960E 01	1.1551E-04	5.0575E 02	2.4617E 03	1.1571E 03	2.4612E 03
7	1.0567E 02	1.1237E 00	3.4403E 03	7.4995E 01	1.2198E-04	5.0139E 02	2.3625E 03	1.1570E 03	2.3620E 03
8	1.0564E 02	1.1227E 00	3.2547E 03	7.3066E 01	1.2894E-04	5.0134E 02	2.3614E 03	1.1569E 03	2.3609E 03
9	1.0561E 02	1.1217E 00	3.0748E 03	7.1142E 01	1.3648E-04	4.9819E 02	2.2935E 03	1.1568E 03	2.2930E 03
10	1.0558E 02	1.1207E 00	2.9014E 03	6.9247E 01	1.4464E-04	4.9809E 02	2.2917E 03	1.1568E 03	2.2911E 03
11	1.0555E 02	1.1199E 00	2.7336E 03	6.7360E 01	1.5351E-04	4.9549E 02	2.2381E 03	1.1567E 03	2.2376E 03
12	1.0552E 02	1.1190E 00	2.5721E 03	6.5499E 01	1.6315E-04	4.9538E 02	2.2360E 03	1.1567E 03	2.2355E 03
13	1.0550E 02	1.1182E 00	2.4159E 03	6.3648E 01	1.7369E-04	4.9324E 02	2.1934E 03	1.1566E 03	2.1928E 03
14	1.0548E 02	1.1174E 00	2.2658E 03	6.1822E 01	1.8520E-04	4.9315E 02	2.1917E 03	1.1566E 03	2.1911E 03
15	1.0545E 02	1.1167E 00	2.1210E 03	6.0009E 01	1.9784E-04	4.9131E 02	2.1561E 03	1.1565E 03	2.1554E 03
16	1.0543E 02	1.1160E 00	1.9820E 03	5.8220E 01	2.1172E-04	4.9123E 02	2.1547E 03	1.1565E 03	2.1540E 03
17	1.0541E 02	1.1153E 00	1.8482E 03	5.6447E 01	2.2703E-04	4.8961E 02	2.1242E 03	1.1564E 03	2.1234E 03
18	1.0539E 02	1.1147E 00	1.7201E 03	5.4701E 01	2.4394E-04	4.8954E 02	2.1229E 03	1.1564E 03	2.1221E 03
19	1.0537E 02	1.1141E 00	1.5972E 03	5.2974E 01	2.6271E-04	4.8808E 02	2.0962E 03	1.1564E 03	2.0953E 03
20	1.0536E 02	1.1136E 00	1.4797E 03	5.1278E 01	2.8356E-04	4.8802E 02	2.0951E 03	1.1563E 03	2.0941E 03
21	1.0534E 02	1.1130E 00	1.3674E 03	4.9606E 01	3.0684E-04	4.8671E 02	2.0715E 03	1.1563E 03	2.0704E 03
22	1.0532E 02	1.1125E 00	1.2605E 03	4.7970E 01	3.3286E-04	4.8665E 02	2.0705E 03	1.1563E 03	2.0693E 03
23	1.0531E 02	1.1121E 00	1.1587E 03	4.6367E 01	3.6211E-04	4.8545E 02	2.0492E 03	1.1562E 03	2.0479E 03
24	1.0530E 02	1.1116E 00	1.0621E 03	4.4809E 01	3.9502E-04	4.8539E 02	2.0484E 03	1.1562E 03	2.0469E 03
25	1.0528E 02	1.1112E 00	9.7056E 02	4.3294E 01	4.3225E-04	4.8428E 02	2.0291E 03	1.1562E 03	2.0275E 03
26	1.0527E 02	1.1108E 00	8.8423E 02	4.1839E 01	4.7444E-04	4.8422E 02	2.0283E 03	1.1562E 03	2.0266E 03
27	1.0526E 02	1.1104E 00	8.0291E 02	4.0444E 01	5.2247E-04	4.8319E 02	2.0107E 03	1.1561E 03	2.0087E 03
28	1.0524E 02	1.1101E 00	7.2670E 02	3.9131E 01	5.7722E-04	4.8314E 02	2.0100E 03	1.1561E 03	2.0078E 03
29	1.0523E 02	1.1098E 00	6.5547E 02	3.7908E 01	6.3991E-04	4.8217E 02	1.9938E 03	1.1561E 03	1.9914E 03
30	1.0522E 02	1.1094E 00	5.8930E 02	3.6804E 01	7.1172E-04	4.8211E 02	1.9931E 03	1.1561E 03	1.9904E 03
31	1.0521E 02	1.1091E 00	5.2806E 02	3.5841E 01	7.9418E-04	4.8120E 02	1.9781E 03	1.1561E 03	1.9751E 03
32	1.0520E 02	1.1089E 00	4.7184E 02	3.5066E 01	8.8873E-04	4.8114E 02	1.9775E 03	1.1560E 03	1.9741E 03
33	1.0519E 02	1.1086E 00	4.2053E 02	3.4528E 01	9.9706E-04	4.8028E 02	1.9637E 03	1.1560E 03	1.9598E 03
34	1.0518E 02	1.1083E 00	3.7418E 02	3.4318E 01	1.1204E-03	4.8022E 02	1.9631E 03	1.1560E 03	1.9588E 03
	1.0517E 02	1.1080E 00	3.3272E 02						

FIGURE 10. SAMPLE OUTPUT - ROW-BY-ROW DATA
Continued

	RENOS	HEAT FLUX	SF	GFLOW	TB1	TB2	HEFF	TBNPR	CUM DELP
1	2.3976E 03	5.6973E 03	1.2377E-01	1.0589E 03	9.3000E 01	9.7020E 01	1.9706E 07	1.8850E 01	1.3901E-01
2	2.3363E 03	5.6781E 03	1.2434E-01	1.0318E 03	9.3000E 01	9.7007E 01	1.8359E 07	1.8396E 01	1.7528E-01
3	2.2752E 03	5.5086E 03	1.2494E-01	1.0048E 03	9.3000E 01	9.6886E 01	1.7127E 07	1.7943E 01	2.0988E-01
4	2.2176E 03	5.4918E 03	1.2554E-01	9.7926E 02	9.3000E 01	9.6875E 01	1.5003E 07	1.7489E 01	2.4295E-01
5	2.1603E 03	5.4176E 03	1.2616E-01	9.5390E 02	9.3000E 01	9.6823E 01	1.4215E 07	1.7036E 01	2.7452E-01
6	2.1045E 03	5.4021E 03	1.2680E-01	9.2921E 02	9.3000E 01	9.6813E 01	1.3135E 07	1.6582E 01	3.0467E-01
7	2.0491E 03	5.3497E 03	1.2747E-01	9.0467E 02	9.3000E 01	9.6774E 01	1.2352E 07	1.6129E 01	3.3340E-01
8	1.9947E 03	5.3358E 03	1.2817E-01	8.8063E 02	9.3000E 01	9.6765E 01	1.1459E 07	1.5675E 01	3.6081E-01
9	1.9407E 03	5.2948E 03	1.2890E-01	8.5674E 02	9.3000E 01	9.6738E 01	1.0771E 07	1.5222E 01	3.8690E-01
10	1.8876E 03	5.2827E 03	1.2965E-01	8.3327E 02	9.3000E 01	9.6726E 01	9.9839E 06	1.4769E 01	4.1176E-01
11	1.8348E 03	5.2474E 03	1.3045E-01	8.0995E 02	9.3000E 01	9.6704E 01	9.2675E 06	1.4315E 01	4.3541E-01
12	1.7829E 03	5.2356E 03	1.3128E-01	7.8701E 02	9.3000E 01	9.6696E 01	8.6305E 06	1.3862E 01	4.5789E-01
13	1.7314E 03	5.2066E 03	1.3215E-01	7.6425E 02	9.3000E 01	9.6675E 01	7.9417E 06	1.3408E 01	4.7925E-01
14	1.6807E 03	5.1957E 03	1.3305E-01	7.4185E 02	9.3000E 01	9.6668E 01	7.3218E 06	1.2955E 01	4.9954E-01
15	1.6305E 03	5.1703E 03	1.3401E-01	7.1964E 02	9.3000E 01	9.6649E 01	6.7564E 06	1.2501E 01	5.1877E-01
16	1.5810E 03	5.1607E 03	1.3501E-01	6.9779E 02	9.3000E 01	9.6642E 01	6.2625E 06	1.2048E 01	5.3700E-01
17	1.5320E 03	5.1382E 03	1.3607E-01	6.7616E 02	9.3000E 01	9.6626E 01	5.7483E 06	1.1595E 01	5.5426E-01
18	1.4839E 03	5.1294E 03	1.3717E-01	6.5491E 02	9.3000E 01	9.6620E 01	5.2446E 06	1.1141E 01	5.7057E-01
19	1.4364E 03	5.1094E 03	1.3834E-01	6.3392E 02	9.3000E 01	9.6605E 01	4.7609E 06	1.0688E 01	5.8603E-01
20	1.3898E 03	5.1013E 03	1.3955E-01	6.1334E 02	9.3000E 01	9.6600E 01	4.3644E 06	1.0234E 01	6.0062E-01
21	1.3439E 03	5.0832E 03	1.4084E-01	5.9308E 02	9.3000E 01	9.6587E 01	3.9428E 06	9.7808E 00	6.1438E-01
22	1.2991E 03	5.0763E 03	1.4218E-01	5.7329E 02	9.3000E 01	9.6582E 01	3.5731E 06	9.3273E 00	6.2738E-01
23	1.2552E 03	5.0597E 03	1.4358E-01	5.5392E 02	9.3000E 01	9.6570E 01	3.2358E 06	8.8739E 00	6.3963E-01
24	1.2126E 03	5.0532E 03	1.4504E-01	5.3511E 02	9.3000E 01	9.6566E 01	2.9073E 06	8.4204E 00	6.5120E-01
25	1.1712E 03	5.0382E 03	1.4656E-01	5.1685E 02	9.3000E 01	9.6555E 01	2.6041E 06	7.9670E 00	6.6211E-01
26	1.1315E 03	5.0322E 03	1.4812E-01	4.9931E 02	9.3000E 01	9.6551E 01	2.3392E 06	7.5135E 00	6.7241E-01
27	1.0934E 03	5.0183E 03	1.4973E-01	4.8253E 02	9.3000E 01	9.6541E 01	2.0824E 06	7.0601E 00	6.8213E-01
28	1.0576E 03	5.0128E 03	1.5134E-01	4.6674E 02	9.3000E 01	9.6537E 01	1.8502E 06	6.6067E 00	6.9133E-01
29	1.0243E 03	4.9998E 03	1.5294E-01	4.5204E 02	9.3000E 01	9.6527E 01	1.6419E 06	6.1532E 00	7.0004E-01
30	9.9420E 02	4.9947E 03	1.5448E-01	4.3876E 02	9.3000E 01	9.6524E 01	1.4532E 06	5.6998E 00	7.0834E-01
31	9.6795E 02	4.9825E 03	1.5591E-01	4.2719E 02	9.3000E 01	9.6515E 01	1.2802E 06	5.2463E 00	7.1629E-01
32	9.4677E 02	4.9774E 03	1.5711E-01	4.1786E 02	9.3000E 01	9.6512E 01	1.1307E 06	4.7929E 00	7.2395E-01
33	9.3205E 02	4.9658E 03	1.5798E-01	4.1138E 02	9.3000E 01	9.6503E 01	9.9960E 05	4.3395E 00	7.3143E-01
34	9.2616E 02	4.9607E 03	1.5833E-01	4.0880E 02	9.3000E 01	9.6500E 01	8.8721E 05	3.8860E 00	7.3883E-01

FIGURE 10. SAMPLE OUTPUT - ROW-BY-ROW DATA
Continuation

CIRCULAR CONDENSER 6 SECTOR MODEL SAMPLE PROBLEM FOR REPORT J = 2

	STSAT	PMIX	WS	VEL	RC	UN	SHNF	SHI	1/ROUT
1	1.0589E 02	1.1311E 00	4.6982E 03	8.6832E 01	8.9171E-05	5.2953E 02	3.1445E 03	1.1578E 03	3.1440E 03
2	1.0585E 02	1.1297E 00	4.4672E 03	8.4952E 01	9.3781E-05	5.2959E 02	3.1470E 03	1.1577E 03	3.1464E 03
3	1.0581E 02	1.1284E 00	4.2425E 03	8.2807E 01	9.8748E-05	5.1246E 02	2.6277E 03	1.1573E 03	2.6273E 03
4	1.0577E 02	1.1272E 00	4.0299E 03	8.0781E 01	1.0396E-04	5.0575E 02	2.4614E 03	1.1572E 03	2.4610E 03
5	1.0574E 02	1.1260E 00	3.8255E 03	7.8804E 01	1.0951E-04	5.0567E 02	2.4598E 03	1.1571E 03	2.4593E 03
6	1.0570E 02	1.1248E 00	3.6270E 03	7.6832E 01	1.1550E-04	5.0132E 02	2.3608E 03	1.1570E 03	2.3604E 03
7	1.0567E 02	1.1237E 00	3.4357E 03	7.4894E 01	1.2193E-04	4.9792E 02	2.2875E 03	1.1569E 03	2.2871E 03
8	1.0564E 02	1.1227E 00	3.2512E 03	7.2985E 01	1.2885E-04	4.9789E 02	2.2871E 03	1.1568E 03	2.2867E 03
9	1.0561E 02	1.1217E 00	3.0723E 03	7.1083E 01	1.3635E-04	4.9537E 02	2.2353E 03	1.1568E 03	2.2348E 03
10	1.0558E 02	1.1208E 00	2.8997E 03	6.9205E 01	1.4447E-04	4.9308E 02	2.1898E 03	1.1567E 03	2.1893E 03
11	1.0555E 02	1.1199E 00	2.7333E 03	6.7351E 01	1.5326E-04	4.9298E 02	2.1880E 03	1.1567E 03	2.1875E 03
12	1.0553E 02	1.1190E 00	2.5724E 03	6.5507E 01	1.6285E-04	4.9115E 02	2.1527E 03	1.1566E 03	2.1522E 03
13	1.0550E 02	1.1182E 00	2.4174E 03	6.3686E 01	1.7329E-04	4.9107E 02	2.1513E 03	1.1566E 03	2.1507E 03
14	1.0548E 02	1.1174E 00	2.2678E 03	6.1876E 01	1.8472E-04	4.8947E 02	2.1211E 03	1.1565E 03	2.1205E 03
15	1.0545E 02	1.1167E 00	2.1239E 03	6.0089E 01	1.9723E-04	4.8940E 02	2.1199E 03	1.1565E 03	2.1192E 03
16	1.0543E 02	1.1160E 00	1.9853E 03	5.8317E 01	2.1099E-04	4.8796E 02	2.0935E 03	1.1564E 03	2.0928E 03
17	1.0541E 02	1.1154E 00	1.8523E 03	5.6570E 01	2.2614E-04	4.8790E 02	2.0924E 03	1.1564E 03	2.0917E 03
18	1.0539E 02	1.1147E 00	1.7246E 03	5.4841E 01	2.4289E-04	4.8660E 02	2.0690E 03	1.1564E 03	2.0682E 03
19	1.0537E 02	1.1141E 00	1.6022E 03	5.3141E 01	2.6143E-04	4.8654E 02	2.0681E 03	1.1563E 03	2.0672E 03
20	1.0536E 02	1.1136E 00	1.4851E 03	5.1463E 01	2.8204E-04	4.8535E 02	2.0470E 03	1.1563E 03	2.0461E 03
21	1.0534E 02	1.1130E 00	1.3733E 03	4.9818E 01	3.0499E-04	4.8530E 02	2.0462E 03	1.1563E 03	2.0452E 03
22	1.0532E 02	1.1125E 00	1.2666E 03	4.8203E 01	3.3067E-04	4.8420E 02	2.0271E 03	1.1562E 03	2.0260E 03
23	1.0531E 02	1.1121E 00	1.1652E 03	4.6629E 01	3.5944E-04	4.8415E 02	2.0264E 03	1.1562E 03	2.0251E 03
24	1.0530E 02	1.1116E 00	1.0688E 03	4.5094E 01	3.9184E-04	4.8313E 02	2.0089E 03	1.1562E 03	2.0075E 03
25	1.0528E 02	1.1112E 00	9.7768E 02	4.3612E 01	4.2836E-04	4.8308E 02	2.0082E 03	1.1562E 03	2.0067E 03
26	1.0527E 02	1.1108E 00	8.9153E 02	4.2184E 01	4.6973E-04	4.8213E 02	1.9921E 03	1.1561E 03	1.9905E 03
27	1.0526E 02	1.1104E 00	8.1050E 02	4.0827E 01	5.1667E-04	4.8208E 02	1.9915E 03	1.1561E 03	1.9897E 03
28	1.0524E 02	1.1101E 00	7.3444E 02	3.9549E 01	5.7014E-04	4.8118E 02	1.9766E 03	1.1561E 03	1.9745E 03
29	1.0523E 02	1.1097E 00	6.6345E 02	3.8371E 01	6.3111E-04	4.8112E 02	1.9760E 03	1.1561E 03	1.9737E 03
30	1.0522E 02	1.1094E 00	5.9741E 02	3.7311E 01	7.0083E-04	4.8028E 02	1.9622E 03	1.1560E 03	1.9596E 03
31	1.0521E 02	1.1091E 00	5.3637E 02	3.6406E 01	7.8052E-04	4.8022E 02	1.9617E 03	1.1560E 03	1.9587E 03
32	1.0520E 02	1.1088E 00	4.8025E 02	3.5691E 01	8.7165E-04	4.8022E 02	1.9620E 03	1.1560E 03	1.9587E 03
33	1.0519E 02	1.1085E 00	4.2903E 02	3.5227E 01	9.7562E-04	4.7942E 02	1.9492E 03	1.1560E 03	1.9456E 03
34	1.0518E 02	1.1082E 00	3.8275E 02	3.5105E 01	1.0934E-03	4.7936E 02	1.9487E 03	1.1560E 03	1.9446E 03
	1.0517E 02	1.1080E 00	3.4136E 02						

FIGURE 10. SAMPLE OUTPUT - ROW-BY-ROW DATA
Continuation

	RENOS	HEAT FLUX	SF	GFLOW	TB1	TB2	HEFF	TBNPR	CUM DELP
1	2.3934E 03	5.6967E 03	1.2381E-01	1.0571E 03	9.3000E 01	9.7015E 01	1.9147E 07	1.8850E 01	1.3890E-01
2	2.3320E 03	5.6791E 03	1.2438E-01	1.0299E 03	9.3000E 01	9.7002E 01	1.8244E 07	1.8396E 01	1.7506E-01
3	2.2708E 03	5.5087E 03	1.2499E-01	1.0028E 03	9.3000E 01	9.6886E 01	1.7837E 07	1.7943E 01	2.0953E-01
4	2.2131E 03	5.4326E 03	1.2559E-01	9.7726E 02	9.3000E 01	9.6833E 01	1.5234E 07	1.7489E 01	2.4248E-01
5	2.1569E 03	5.4163E 03	1.2620E-01	9.5240E 02	9.3000E 01	9.6823E 01	1.4093E 07	1.7036E 01	2.7394E-01
6	2.1011E 03	5.3634E 03	1.2684E-01	9.2769E 02	9.3000E 01	9.6784E 01	1.3142E 07	1.6582E 01	3.0399E-01
7	2.0463E 03	5.3193E 03	1.2751E-01	9.0347E 02	9.3000E 01	9.6752E 01	1.2431E 07	1.6129E 01	3.3264E-01
8	1.9925E 03	5.3058E 03	1.2820E-01	8.7968E 02	9.3000E 01	9.6743E 01	1.1538E 07	1.5675E 01	3.5999E-01
9	1.9391E 03	5.2703E 03	1.2892E-01	8.5604E 02	9.3000E 01	9.6720E 01	1.0793E 07	1.5222E 01	3.8606E-01
10	1.8865E 03	5.2381E 03	1.2967E-01	8.3277E 02	9.3000E 01	9.6697E 01	9.9072E 06	1.4769E 01	4.1089E-01
11	1.8346E 03	5.2256E 03	1.3045E-01	8.0986E 02	9.3000E 01	9.6689E 01	9.3351E 06	1.4315E 01	4.3452E-01
12	1.7832E 03	5.1989E 03	1.3127E-01	7.8713E 02	9.3000E 01	9.6669E 01	8.5391E 06	1.3862E 01	4.5705E-01
13	1.7325E 03	5.1877E 03	1.3213E-01	7.6472E 02	9.3000E 01	9.6661E 01	8.0066E 06	1.3408E 01	4.7844E-01
14	1.6822E 03	5.1640E 03	1.3303E-01	7.4251E 02	9.3000E 01	9.6644E 01	7.3386E 06	1.2955E 01	4.9875E-01
15	1.6327E 03	5.1538E 03	1.3397E-01	7.2063E 02	9.3000E 01	9.6637E 01	6.8480E 06	1.2501E 01	5.1804E-01
16	1.5837E 03	5.1325E 03	1.3496E-01	6.9897E 02	9.3000E 01	9.6621E 01	6.2926E 06	1.2048E 01	5.3632E-01
17	1.5354E 03	5.1233E 03	1.3599E-01	6.7766E 02	9.3000E 01	9.6615E 01	5.7604E 06	1.1595E 01	5.5365E-01
18	1.4878E 03	5.1041E 03	1.3708E-01	6.5660E 02	9.3000E 01	9.6601E 01	5.2908E 06	1.1141E 01	5.7005E-01
19	1.4409E 03	5.0959E 03	1.3822E-01	6.3593E 02	9.3000E 01	9.6596E 01	4.7791E 06	1.0688E 01	5.8559E-01
20	1.3948E 03	5.0784E 03	1.3942E-01	6.1556E 02	9.3000E 01	9.6583E 01	4.3802E 06	1.0234E 01	6.0027E-01
21	1.3497E 03	5.0710E 03	1.4067E-01	5.9563E 02	9.3000E 01	9.6578E 01	3.9931E 06	9.7808E 00	6.1414E-01
22	1.3054E 03	5.0550E 03	1.4198E-01	5.7608E 02	9.3000E 01	9.6566E 01	3.6121E 06	9.3273E 00	6.2724E-01
23	1.2623E 03	5.0484E 03	1.4335E-01	5.5705E 02	9.3000E 01	9.6562E 01	3.2753E 06	8.8739E 00	6.3963E-01
24	1.2203E 03	5.0337E 03	1.4477E-01	5.3852E 02	9.3000E 01	9.6551E 01	2.9486E 06	8.4204E 00	6.5131E-01
25	1.1798E 03	5.0276E 03	1.4624E-01	5.2064E 02	9.3000E 01	9.6547E 01	2.6486E 06	7.9670E 00	6.6235E-01
26	1.1408E 03	5.0140E 03	1.4775E-01	5.0343E 02	9.3000E 01	9.6537E 01	2.3700E 06	7.5135E 00	6.7279E-01
27	1.1038E 03	5.0084E 03	1.4928E-01	4.8709E 02	9.3000E 01	9.6534E 01	2.1211E 06	7.0601E 00	6.8266E-01
28	1.0689E 03	4.9958E 03	1.5082E-01	4.7171E 02	9.3000E 01	9.6524E 01	1.8826E 06	6.6067E 00	6.9202E-01
29	1.0368E 03	4.9904E 03	1.5233E-01	4.5754E 02	9.3000E 01	9.6521E 01	1.6740E 06	6.1532E 00	7.0091E-01
30	1.0079E 03	4.9786E 03	1.5377E-01	4.4480E 02	9.3000E 01	9.6512E 01	1.4869E 06	5.6998E 00	7.0940E-01
31	9.8317E 02	4.9735E 03	1.5507E-01	4.3391E 02	9.3000E 01	9.6509E 01	1.3163E 06	5.2463E 00	7.1753E-01
32	9.6364E 02	4.9690E 03	1.5614E-01	4.2530E 02	9.3000E 01	9.6506E 01	1.1659E 06	4.7929E 00	7.2540E-01
33	9.5087E 02	4.9577E 03	1.5687E-01	4.1968E 02	9.3000E 01	9.6497E 01	1.0340E 06	4.3395E 00	7.3312E-01
34	9.4737E 02	4.9527E 03	1.5707E-01	4.1815E 02	9.3000E 01	9.6494E 01	9.1996E 05	3.8860E 00	7.4078E-01

FIGURE 10. SAMPLE OUTPUT - ROW-BY-ROW DATA
Continuation

CIRCULAR CONDENSER 6 SECTOR MODEL SAMPLE PROBLEM FOR REPORT J = 3

	STSAT	PMIX	WS	VEL	RC	UN	SHNF	SHI	1/ROUT
1	1.0589E 02	1.1311E 00	4.7050E 03	8.6959E 01	8.9171E-05	5.2953E 02	3.1445E 03	1.1578E 03	3.1439E 03
2	1.0585E 02	1.1297E 00	4.4741E 03	8.5083E 01	9.3774E-05	5.1238E 02	2.6255E 03	1.1574E 03	2.6251E 03
3	1.0581E 02	1.1284E 00	4.2554E 03	8.3061E 01	9.8591E-05	5.0119E 02	2.3572E 03	1.1571E 03	2.3569E 03
4	1.0577E 02	1.1271E 00	4.0468E 03	8.1121E 01	1.0367E-04	4.9773E 02	2.2831E 03	1.1570E 03	2.2828E 03
5	1.0574E 02	1.1259E 00	3.8451E 03	7.9210E 01	1.0911E-04	4.9510E 02	2.2293E 03	1.1569E 03	2.2289E 03
6	1.0570E 02	1.1248E 00	3.6501E 03	7.7323E 01	1.1494E-04	4.9499E 02	2.2272E 03	1.1569E 03	2.2268E 03
7	1.0567E 02	1.1237E 00	3.4609E 03	7.5445E 01	1.2122E-04	4.9503E 02	2.2281E 03	1.1568E 03	2.2277E 03
8	1.0564E 02	1.1226E 00	3.2773E 03	7.3574E 01	1.2801E-04	4.9509E 02	2.2295E 03	1.1568E 03	2.2291E 03
9	1.0560E 02	1.1216E 00	3.0993E 03	7.1711E 01	1.3537E-04	4.9516E 02	2.2310E 03	1.1568E 03	2.2305E 03
10	1.0558E 02	1.1207E 00	2.9268E 03	6.9856E 01	1.4334E-04	4.9522E 02	2.2325E 03	1.1567E 03	2.2320E 03
11	1.0555E 02	1.1198E 00	2.7598E 03	6.8010E 01	1.5201E-04	4.9812E 02	2.2925E 03	1.1568E 03	2.2919E 03
12	1.0552E 02	1.1189E 00	2.5975E 03	6.6154E 01	1.6151E-04	4.9813E 02	2.2928E 03	1.1567E 03	2.2922E 03
13	1.0550E 02	1.1181E 00	2.4407E 03	6.4307E 01	1.7188E-04	4.9817E 02	2.2940E 03	1.1567E 03	2.2933E 03
14	1.0547E 02	1.1173E 00	2.2893E 03	6.2471E 01	1.8325E-04	4.9822E 02	2.2952E 03	1.1567E 03	2.2945E 03
15	1.0545E 02	1.1166E 00	2.1433E 03	6.0646E 01	1.9573E-04	4.9827E 02	2.2964E 03	1.1567E 03	2.2956E 03
16	1.0543E 02	1.1158E 00	2.0027E 03	5.8835E 01	2.0947E-04	4.9832E 02	2.2976E 03	1.1566E 03	2.2967E 03
17	1.0541E 02	1.1152E 00	1.8673E 03	5.7037E 01	2.2465E-04	4.9836E 02	2.2987E 03	1.1566E 03	2.2978E 03
18	1.0539E 02	1.1145E 00	1.7373E 03	5.5255E 01	2.4146E-04	5.0186E 02	2.3748E 03	1.1567E 03	2.3738E 03
19	1.0537E 02	1.1139E 00	1.6118E 03	5.3467E 01	2.6025E-04	5.0188E 02	2.3754E 03	1.1566E 03	2.3743E 03
20	1.0535E 02	1.1134E 00	1.4916E 03	5.1699E 01	2.8121E-04	5.0191E 02	2.3763E 03	1.1566E 03	2.3750E 03
21	1.0533E 02	1.1128E 00	1.3767E 03	4.9951E 01	3.0468E-04	5.0194E 02	2.3773E 03	1.1566E 03	2.3758E 03
22	1.0532E 02	1.1123E 00	1.2670E 03	4.8227E 01	3.3105E-04	5.0197E 02	2.3782E 03	1.1566E 03	2.3766E 03
23	1.0530E 02	1.1119E 00	1.1626E 03	4.6531E 01	3.6079E-04	5.0200E 02	2.3790E 03	1.1566E 03	2.3772E 03
24	1.0529E 02	1.1114E 00	1.0633E 03	4.4867E 01	3.9447E-04	5.0202E 02	2.3798E 03	1.1566E 03	2.3779E 03
25	1.0528E 02	1.1110E 00	9.6917E 02	4.3240E 01	4.3275E-04	5.0655E 02	2.4850E 03	1.1567E 03	2.4826E 03
26	1.0526E 02	1.1106E 00	8.7957E 02	4.1625E 01	4.7681E-04	5.0657E 02	2.4859E 03	1.1566E 03	2.4832E 03
27	1.0525E 02	1.1102E 00	7.9515E 02	4.0061E 01	5.2741E-04	5.0659E 02	2.4866E 03	1.1566E 03	2.4836E 03
28	1.0524E 02	1.1099E 00	7.1591E 02	3.8557E 01	5.8575E-04	5.0660E 02	2.4874E 03	1.1566E 03	2.4839E 03
29	1.0523E 02	1.1096E 00	6.4182E 02	3.7126E 01	6.5332E-04	5.0660E 02	2.4880E 03	1.1566E 03	2.4841E 03
30	1.0522E 02	1.1093E 00	5.7288E 02	3.5785E 01	7.3188E-04	5.0660E 02	2.4887E 03	1.1566E 03	2.4842E 03
31	1.0521E 02	1.1090E 00	5.0908E 02	3.4558E 01	8.2353E-04	5.1330E 02	2.6592E 03	1.1567E 03	2.6533E 03
32	1.0519E 02	1.1087E 00	4.4977E 02	3.3430E 01	9.3204E-04	5.1332E 02	2.6607E 03	1.1567E 03	2.6539E 03
33	1.0518E 02	1.1085E 00	3.9562E 02	3.2488E 01	1.0595E-03	5.1331E 02	2.6616E 03	1.1567E 03	2.6537E 03
34	1.0517E 02	1.1082E 00	3.4664E 02	3.1796E 01	1.2090E-03	5.1329E 02	2.6623E 03	1.1567E 03	2.6532E 03
	1.0516E 02	1.1080E 00	3.0282E 02						

FIGURE 10. SAMPLE OUTPUT - ROW-BY-ROW DATA
Continuation

	RENDS	HEAT FLUX	SF	GFLOW	TB1	TB2	HEFF	TBNPR	CUM DELP
1	2.3969E 03	5.6967E 03	1.2378E-01	1.0586E 03	9.3000E 01	9.7015E 01	1.8625E 07	1.8850E 01	1.3901E-01
2	2.3356E 03	5.5249E 03	1.2435E-01	1.0315E 03	9.3000E 01	9.6898E 01	1.7761E 07	1.8396E 01	1.7528E-01
3	2.2778E 03	5.4072E 03	1.2492E-01	1.0059E 03	9.3000E 01	9.6817E 01	1.7482E 07	1.7943E 01	2.0996E-01
4	2.2224E 03	5.3605E 03	1.2549E-01	9.8136E 02	9.3000E 01	9.6782E 01	1.5019E 07	1.7489E 01	2.4316E-01
5	2.1680E 03	5.3214E 03	1.2608E-01	9.5728E 02	9.3000E 01	9.6756E 01	1.4396E 07	1.7036E 01	2.7492E-01
6	2.1144E 03	5.3057E 03	1.2669E-01	9.3359E 02	9.3000E 01	9.6746E 01	1.3140E 07	1.6582E 01	3.0530E-01
7	2.0613E 03	5.2922E 03	1.2732E-01	9.1008E 02	9.3000E 01	9.6736E 01	1.2546E 07	1.6129E 01	3.3437E-01
8	2.0085E 03	5.2796E 03	1.2799E-01	8.8673E 02	9.3000E 01	9.6727E 01	1.1666E 07	1.5675E 01	3.6209E-01
9	1.9561E 03	5.2674E 03	1.2868E-01	8.6356E 02	9.3000E 01	9.6718E 01	1.0845E 07	1.5222E 01	3.8857E-01
10	1.9041E 03	5.2561E 03	1.2941E-01	8.4055E 02	9.3000E 01	9.6709E 01	1.0083E 07	1.4769E 01	4.1382E-01
11	1.8524E 03	5.2707E 03	1.3018E-01	8.1771E 02	9.3000E 01	9.6717E 01	9.3794E 06	1.4315E 01	4.3788E-01
12	1.8006E 03	5.2596E 03	1.3059E-01	7.9481E 02	9.3000E 01	9.6709E 01	8.7602E 06	1.3862E 01	4.6077E-01
13	1.7492E 03	5.2496E 03	1.3184E-01	7.7209E 02	9.3000E 01	9.6701E 01	8.0675E 06	1.3408E 01	4.8250E-01
14	1.6982E 03	5.2400E 03	1.3274E-01	7.4955E 02	9.3000E 01	9.6694E 01	7.4300E 06	1.2955E 01	5.0316E-01
15	1.6476E 03	5.2308E 03	1.3368E-01	7.2721E 02	9.3000E 01	9.6687E 01	6.8353E 06	1.2501E 01	5.2277E-01
16	1.5975E 03	5.2222E 03	1.3467E-01	7.0507E 02	9.3000E 01	9.6681E 01	6.2955E 06	1.2048E 01	5.4134E-01
17	1.5479E 03	5.2139E 03	1.3572E-01	6.8314E 02	9.3000E 01	9.6675E 01	5.8347E 06	1.1595E 01	5.5890E-01
18	1.4988E 03	5.2358E 03	1.3682E-01	6.6145E 02	9.3000E 01	9.6692E 01	5.2855E 06	1.1141E 01	5.7552E-01
19	1.4496E 03	5.2280E 03	1.3801E-01	6.3973E 02	9.3000E 01	9.6686E 01	4.8281E 06	1.0688E 01	5.9122E-01
20	1.4010E 03	5.2208E 03	1.3925E-01	6.1828E 02	9.3000E 01	9.6681E 01	4.3972E 06	1.0234E 01	6.0600E-01
21	1.3530E 03	5.2141E 03	1.4057E-01	5.9711E 02	9.3000E 01	9.6676E 01	3.9873E 06	9.7808E 00	6.1995E-01
22	1.3058E 03	5.2077E 03	1.4197E-01	5.7626E 02	9.3000E 01	9.6671E 01	3.5913E 06	9.3273E 00	6.3309E-01
23	1.2594E 03	5.2016E 03	1.4344E-01	5.5578E 02	9.3000E 01	9.6667E 01	3.2368E 06	8.8739E 00	6.4542E-01
24	1.2139E 03	5.1958E 03	1.4499E-01	5.3571E 02	9.3000E 01	9.6662E 01	2.8993E 06	8.4204E 00	6.5701E-01
25	1.1695E 03	5.2288E 03	1.4662E-01	5.1611E 02	9.3000E 01	9.6687E 01	2.5816E 06	7.9670E 00	6.6789E-01
26	1.1255E 03	5.2235E 03	1.4837E-01	4.9668E 02	9.3000E 01	9.6683E 01	2.2982E 06	7.5135E 00	6.7810E-01
27	1.0829E 03	5.2185E 03	1.5019E-01	4.7788E 02	9.3000E 01	9.6679E 01	2.0313E 06	7.0601E 00	6.8765E-01
28	1.0419E 03	5.2136E 03	1.5208E-01	4.5981E 02	9.3000E 01	9.6675E 01	1.7916E 06	6.6067E 00	6.9661E-01
29	1.0030E 03	5.2088E 03	1.5403E-01	4.4263E 02	9.3000E 01	9.6672E 01	1.5737E 06	6.1532E 00	7.0503E-01
30	9.6653E 02	5.2042E 03	1.5599E-01	4.2655E 02	9.3000E 01	9.6669E 01	1.3733E 06	5.6998E 00	7.1297E-01
31	9.3318E 02	5.2568E 03	1.5791E-01	4.1185E 02	9.3000E 01	9.6706E 01	1.1956E 06	5.2463E 00	7.2044E-01
32	9.0250E 02	5.2524E 03	1.5981E-01	3.9833E 02	9.3000E 01	9.6702E 01	1.0366E 06	4.7929E 00	7.2752E-01
33	8.7687E 02	5.2477E 03	1.6150E-01	3.8703E 02	9.3000E 01	9.6699E 01	8.9718E 05	4.3395E 00	7.3428E-01
34	8.5803E 02	5.2430E 03	1.6280E-01	3.7874E 02	9.3000E 01	9.6696E 01	7.7701E 05	3.8860E 00	7.4081E-01

FIGURE 10. SAMPLE OUTPUT - ROW-BY-ROW DATA
Continuation

CIRCULAR CONDENSER 6 SECTOR MODEL SAMPLE PROBLEM FOR REPORT J = 4

	STSAT	PMIX	WS	VEL	RC	UN	SHNF	SHI	1/ROUT
1	1.0589E 02	1.1311E 00	4.6206E 03	8.5397E 01	8.9171E-05	4.8423E 02	2.0247E 03	1.1568E 03	2.0245E 03
2	1.0585E 02	1.1297E 00	4.4062E 03	8.3789E 01	9.3509E-05	4.8304E 02	2.0044E 03	1.1567E 03	2.0041E 03
3	1.0581E 02	1.1285E 00	4.1981E 03	8.1935E 01	9.8144E-05	4.8199E 02	1.9866E 03	1.1567E 03	1.9863E 03
4	1.0577E 02	1.1272E 00	3.9960E 03	8.0096E 01	1.0311E-04	4.8101E 02	1.9704E 03	1.1566E 03	1.9701E 03
5	1.0574E 02	1.1261E 00	3.8000E 03	7.8271E 01	1.0842E-04	4.8010E 02	1.9554E 03	1.1566E 03	1.9551E 03
6	1.0571E 02	1.1250E 00	3.6099E 03	7.6461E 01	1.1413E-04	4.8006E 02	1.9548E 03	1.1565E 03	1.9545E 03
7	1.0567E 02	1.1239E 00	3.4254E 03	7.4659E 01	1.2028E-04	4.8114E 02	1.9729E 03	1.1565E 03	1.9726E 03
8	1.0564E 02	1.1229E 00	3.2460E 03	7.2858E 01	1.2693E-04	4.8117E 02	1.9736E 03	1.1565E 03	1.9733E 03
9	1.0561E 02	1.1219E 00	3.0720E 03	7.1067E 01	1.3411E-04	4.8232E 02	1.9931E 03	1.1565E 03	1.9928E 03
10	1.0558E 02	1.1209E 00	2.9032E 03	6.9279E 01	1.4191E-04	4.8236E 02	1.9939E 03	1.1564E 03	1.9935E 03
11	1.0556E 02	1.1200E 00	2.7397E 03	6.7500E 01	1.5038E-04	4.8242E 02	1.9951E 03	1.1564E 03	1.9946E 03
12	1.0553E 02	1.1192E 00	2.5816E 03	6.5734E 01	1.5959E-04	4.8363E 02	2.0159E 03	1.1564E 03	2.0155E 03
13	1.0550E 02	1.1184E 00	2.4285E 03	6.3971E 01	1.6964E-04	4.8368E 02	2.0168E 03	1.1564E 03	2.0163E 03
14	1.0548E 02	1.1176E 00	2.2807E 03	6.2221E 01	1.8064E-04	4.8495E 02	2.0392E 03	1.1564E 03	2.0387E 03
15	1.0546E 02	1.1168E 00	2.1379E 03	6.0478E 01	1.9270E-04	4.8500E 02	2.0401E 03	1.1564E 03	2.0395E 03
16	1.0544E 02	1.1161E 00	2.0003E 03	5.8750E 01	2.0596E-04	4.8505E 02	2.0411E 03	1.1564E 03	2.0405E 03
17	1.0542E 02	1.1155E 00	1.8679E 03	5.7040E 01	2.2055E-04	4.8641E 02	2.0655E 03	1.1564E 03	2.0648E 03
18	1.0540E 02	1.1148E 00	1.7404E 03	5.5339E 01	2.3671E-04	4.8646E 02	2.0665E 03	1.1563E 03	2.0657E 03
19	1.0538E 02	1.1142E 00	1.6180E 03	5.3660E 01	2.5460E-04	4.8792E 02	2.0932E 03	1.1564E 03	2.0924E 03
20	1.0536E 02	1.1137E 00	1.5006E 03	5.1995E 01	2.7453E-04	4.8798E 02	2.0943E 03	1.1563E 03	2.0934E 03
21	1.0534E 02	1.1131E 00	1.3882E 03	5.0356E 01	2.9674E-04	4.8801E 02	2.0952E 03	1.1563E 03	2.0942E 03
22	1.0533E 02	1.1126E 00	1.2810E 03	4.8747E 01	3.2157E-04	4.8961E 02	2.1250E 03	1.1563E 03	2.1238E 03
23	1.0531E 02	1.1121E 00	1.1786E 03	4.7162E 01	3.4949E-04	4.8966E 02	2.1262E 03	1.1563E 03	2.1249E 03
24	1.0530E 02	1.1117E 00	1.0813E 03	4.5617E 01	3.8093E-04	4.9143E 02	2.1600E 03	1.1563E 03	2.1584E 03
25	1.0528E 02	1.1112E 00	9.8879E 02	4.4106E 01	4.1656E-04	4.9149E 02	2.1613E 03	1.1563E 03	2.1596E 03
26	1.0527E 02	1.1108E 00	9.0135E 02	4.2648E 01	4.5694E-04	4.9152E 02	2.1621E 03	1.1563E 03	2.1602E 03
27	1.0526E 02	1.1104E 00	8.1898E 02	4.1254E 01	5.0288E-04	4.9349E 02	2.2010E 03	1.1564E 03	2.1987E 03
28	1.0524E 02	1.1101E 00	7.4140E 02	3.9923E 01	5.5547E-04	4.9355E 02	2.2026E 03	1.1563E 03	2.2001E 03
29	1.0523E 02	1.1097E 00	6.6887E 02	3.8684E 01	6.1567E-04	4.9583E 02	2.2487E 03	1.1564E 03	2.2458E 03
30	1.0522E 02	1.1094E 00	6.0112E 02	3.7543E 01	6.8501E-04	4.9590E 02	2.2506E 03	1.1564E 03	2.2473E 03
31	1.0521E 02	1.1091E 00	5.3841E 02	3.6544E 01	7.6474E-04	4.9858E 02	2.3072E 03	1.1564E 03	2.3032E 03
32	1.0520E 02	1.1088E 00	4.8048E 02	3.5709E 01	8.5685E-04	4.9871E 02	2.3106E 03	1.1564E 03	2.3061E 03
33	1.0519E 02	1.1085E 00	4.2761E 02	3.5110E 01	9.6271E-04	4.9869E 02	2.3108E 03	1.1564E 03	2.3057E 03
34	1.0518E 02	1.1082E 00	3.7978E 02	3.4832E 01	1.0838E-03	5.0209E 02	2.3862E 03	1.1565E 03	2.3800E 03
	1.0517E 02	1.1080E 00	3.3674E 02						

FIGURE 10. SAMPLE OUTPUT - ROW-BY-ROW DATA
Continuation

	FENOS	HEAT FLUX	SF	SFLOW	TB1	TB2	HEFF	TBNPR	CUM DELP
1	2.3539E 03	5.2869E 03	1.2417E-01	1.0396E 03	9.3000E 01	9.6731E 01	1.8805E 07	1.8850E 01	1.3777E-01
2	2.3302E 03	5.2601E 03	1.2469E-01	1.0158E 03	9.3000E 01	9.6711E 01	1.6883E 07	1.8396E 01	1.7303E-01
3	2.2471E 03	5.2348E 03	1.2523E-01	9.9232E 02	9.3000E 01	9.6693E 01	1.6044E 07	1.7943E 01	2.0688E-01
4	2.1945E 03	5.2108E 03	1.2579E-01	9.6906E 02	9.3000E 01	9.6676E 01	1.5198E 07	1.7489E 01	2.3932E-01
5	2.1425E 03	5.1882E 03	1.2636E-01	9.4605E 02	9.3000E 01	9.6660E 01	1.4461E 07	1.7036E 01	2.7040E-01
6	2.0911E 03	5.1739E 03	1.2696E-01	9.2330E 02	9.3000E 01	9.6650E 01	1.3247E 07	1.6582E 01	3.0017E-01
7	2.0401E 03	5.1711E 03	1.2758E-01	9.0074E 02	9.3000E 01	9.6645E 01	1.2515E 07	1.6129E 01	3.2867E-01
8	1.9893E 03	5.1586E 03	1.2824E-01	8.7326E 02	9.3000E 01	9.6636E 01	1.1683E 07	1.5675E 01	3.5594E-01
9	1.9389E 03	5.1567E 03	1.2892E-01	8.5596E 02	9.3000E 01	9.6635E 01	1.0935E 07	1.5222E 01	3.8202E-01
10	1.8887E 03	5.1454E 03	1.2964E-01	8.3376E 02	9.3000E 01	9.6627E 01	1.0218E 07	1.4769E 01	4.0691E-01
11	1.8389E 03	5.1348E 03	1.3038E-01	8.1175E 02	9.3000E 01	9.6619E 01	9.4663E 06	1.4315E 01	4.3065E-01
12	1.7895E 03	5.1348E 03	1.3117E-01	7.8994E 02	9.3000E 01	9.6620E 01	8.8678E 06	1.3862E 01	4.5329E-01
13	1.7404E 03	5.1249E 03	1.3199E-01	7.6823E 02	9.3000E 01	9.6612E 01	8.1473E 06	1.3408E 01	4.7484E-01
14	1.6918E 03	5.1265E 03	1.3285E-01	7.4673E 02	9.3000E 01	9.6614E 01	7.5756E 06	1.2955E 01	4.9538E-01
15	1.6434E 03	5.1175E 03	1.3376E-01	7.2536E 02	9.3000E 01	9.6607E 01	6.9845E 06	1.2501E 01	5.1486E-01
16	1.5956E 03	5.1092E 03	1.3471E-01	7.0422E 02	9.3000E 01	9.6601E 01	6.4534E 06	1.2048E 01	5.3339E-01
17	1.5483E 03	5.1125E 03	1.3571E-01	6.8334E 02	9.3000E 01	9.6604E 01	5.8964E 06	1.1595E 01	5.5098E-01
18	1.5014E 03	5.1050E 03	1.3676E-01	6.6262E 02	9.3000E 01	9.6598E 01	5.4301E 06	1.1141E 01	5.6764E-01
19	1.4551E 03	5.1101E 03	1.3787E-01	6.4219E 02	9.3000E 01	9.6602E 01	4.9763E 06	1.0688E 01	5.8345E-01
20	1.4093E 03	5.1033E 03	1.3903E-01	6.2196E 02	9.3000E 01	9.6597E 01	4.5432E 06	1.0234E 01	5.9839E-01
21	1.3643E 03	5.0968E 03	1.4026E-01	6.0209E 02	9.3000E 01	9.6592E 01	4.1205E 06	9.7808E 00	6.1253E-01
22	1.3202E 03	5.1040E 03	1.4153E-01	5.8261E 02	9.3000E 01	9.6598E 01	3.7372E 06	9.3273E 00	6.2590E-01
23	1.2768E 03	5.0981E 03	1.4288E-01	5.6344E 02	9.3000E 01	9.6593E 01	3.3766E 06	8.8739E 00	6.3852E-01
24	1.2345E 03	5.1074E 03	1.4428E-01	5.4478E 02	9.3000E 01	9.6600E 01	3.0368E 06	8.4204E 00	6.5044E-01
25	1.1932E 03	5.1024E 03	1.4574E-01	5.2655E 02	9.3000E 01	9.6596E 01	2.7277E 06	7.9670E 00	6.6168E-01
26	1.1534E 03	5.0971E 03	1.4725E-01	5.0897E 02	9.3000E 01	9.6592E 01	2.4492E 06	7.5135E 00	6.7230E-01
27	1.1153E 03	5.1088E 03	1.4879E-01	4.9219E 02	9.3000E 01	9.6601E 01	2.1748E 06	7.0601E 00	6.8234E-01
28	1.0790E 03	5.1044E 03	1.5036E-01	4.7617E 02	9.3000E 01	9.6597E 01	1.9347E 06	6.6067E 00	6.9186E-01
29	1.0452E 03	5.1191E 03	1.5193E-01	4.6127E 02	9.3000E 01	9.6608E 01	1.7166E 06	6.1532E 00	7.0087E-01
30	1.0141E 03	5.1151E 03	1.5345E-01	4.4756E 02	9.3000E 01	9.6604E 01	1.5160E 06	5.6998E 00	7.0946E-01
31	9.8690E 02	5.1336E 03	1.5487E-01	4.3555E 02	9.3000E 01	9.6617E 01	1.3349E 06	5.2463E 00	7.1764E-01
32	9.6410E 02	5.1292E 03	1.5612E-01	4.2550E 02	9.3000E 01	9.6617E 01	1.1784E 06	4.7929E 00	7.2554E-01
33	9.4772E 02	5.1244E 03	1.5705E-01	4.1829E 02	9.3000E 01	9.6614E 01	1.0373E 06	4.3395E 00	7.3320E-01
34	9.4000E 02	5.1491E 03	1.5750E-01	4.1490E 02	9.3000E 01	9.6631E 01	9.1792E 05	3.8860E 00	7.4078E-01

FIGURE 10. SAMPLE OUTPUT - ROW-BY-ROW DATA
Continuation

CIRCULAR CONDENSER 6 SECTOR MODEL SAMPLE PROBLEM FOR REPORT J = 5

	STSAT	PMIX	WS	VEL	RC	UN	SHNF	SHI	1/ROUT
1	1.0589E 02	1.1311E 00	4.6805E 03	8.6505E 01	8.9171E-05	4.9236E 02	2.1742E 03	1.1570E 03	2.1740E 03
2	1.0585E 02	1.1297E 00	4.4631E 03	8.4874E 01	9.3514E-05	4.9230E 02	2.1733E 03	1.1569E 03	2.1730E 03
3	1.0581E 02	1.1284E 00	4.2517E 03	8.2986E 01	9.8164E-05	4.9236E 02	2.1746E 03	1.1569E 03	2.1743E 03
4	1.0577E 02	1.1272E 00	4.0460E 03	8.1105E 01	1.0315E-04	4.9243E 02	2.1762E 03	1.1569E 03	2.1759E 03
5	1.0574E 02	1.1260E 00	3.8461E 03	7.9230E 01	1.0851E-04	4.9484E 02	2.2240E 03	1.1569E 03	2.2237E 03
6	1.0570E 02	1.1248E 00	3.6512E 03	7.7344E 01	1.1431E-04	4.9502E 02	2.2278E 03	1.1568E 03	2.2275E 03
7	1.0567E 02	1.1237E 00	3.4619E 03	7.5466E 01	1.2056E-04	4.9503E 02	2.2281E 03	1.1568E 03	2.2277E 03
8	1.0564E 02	1.1227E 00	3.2782E 03	7.3595E 01	1.2731E-04	4.9508E 02	2.2294E 03	1.1568E 03	2.2290E 03
9	1.0561E 02	1.1217E 00	3.1002E 03	7.1731E 01	1.3462E-04	4.9515E 02	2.2309E 03	1.1567E 03	2.2304E 03
10	1.0558E 02	1.1207E 00	2.9277E 03	6.9876E 01	1.4255E-04	4.9521E 02	2.2323E 03	1.1567E 03	2.2318E 03
11	1.0555E 02	1.1198E 00	2.7607E 03	6.8030E 01	1.5117E-04	4.9811E 02	2.2924E 03	1.1568E 03	2.2919E 03
12	1.0552E 02	1.1189E 00	2.5984E 03	6.6174E 01	1.6061E-04	4.9813E 02	2.2928E 03	1.1567E 03	2.2922E 03
13	1.0550E 02	1.1181E 00	2.4416E 03	6.4328E 01	1.7093E-04	4.9817E 02	2.2939E 03	1.1567E 03	2.2933E 03
14	1.0547E 02	1.1173E 00	2.2901E 03	6.2492E 01	1.8223E-04	4.9822E 02	2.2952E 03	1.1567E 03	2.2945E 03
15	1.0545E 02	1.1166E 00	2.1441E 03	6.0669E 01	1.9463E-04	4.9827E 02	2.2964E 03	1.1567E 03	2.2956E 03
16	1.0543E 02	1.1159E 00	2.0035E 03	5.8858E 01	2.0830E-04	4.9832E 02	2.2975E 03	1.1566E 03	2.2967E 03
17	1.0541E 02	1.1152E 00	1.8681E 03	5.7061E 01	2.2338E-04	4.9836E 02	2.2986E 03	1.1566E 03	2.2977E 03
18	1.0539E 02	1.1146E 00	1.7381E 03	5.5280E 01	2.4009E-04	5.0186E 02	2.3748E 03	1.1567E 03	2.3737E 03
19	1.0537E 02	1.1140E 00	1.6126E 03	5.3493E 01	2.5877E-04	5.0188E 02	2.3754E 03	1.1566E 03	2.3742E 03
20	1.0535E 02	1.1134E 00	1.4924E 03	5.1725E 01	2.7960E-04	5.0191E 02	2.3763E 03	1.1566E 03	2.3750E 03
21	1.0533E 02	1.1129E 00	1.3775E 03	4.9979E 01	3.0292E-04	5.0194E 02	2.3772E 03	1.1566E 03	2.3758E 03
22	1.0532E 02	1.1123E 00	1.2678E 03	4.8256E 01	3.2912E-04	5.0197E 02	2.3781E 03	1.1566E 03	2.3766E 03
23	1.0530E 02	1.1119E 00	1.1633E 03	4.6561E 01	3.5867E-04	5.0200E 02	2.3790E 03	1.1566E 03	2.3772E 03
24	1.0529E 02	1.1114E 00	1.0640E 03	4.4899E 01	3.9212E-04	5.0202E 02	2.3798E 03	1.1566E 03	2.3778E 03
25	1.0528E 02	1.1110E 00	9.6993E 02	4.3273E 01	4.3016E-04	5.0655E 02	2.4849E 03	1.1567E 03	2.4826E 03
26	1.0526E 02	1.1106E 00	8.8033E 02	4.1561E 01	4.7392E-04	5.0657E 02	2.4858E 03	1.1566E 03	2.4832E 03
27	1.0525E 02	1.1102E 00	7.9591E 02	4.0399E 01	5.2416E-04	5.0659E 02	2.4866E 03	1.1566E 03	2.4836E 03
28	1.0524E 02	1.1099E 00	7.1666E 02	3.8597E 01	5.8208E-04	5.0660E 02	2.4873E 03	1.1566E 03	2.4839E 03
29	1.0523E 02	1.1096E 00	6.4258E 02	3.7169E 01	6.4916E-04	5.0660E 02	2.4880E 03	1.1566E 03	2.4841E 03
30	1.0522E 02	1.1093E 00	5.7364E 02	3.5831E 01	7.2711E-04	5.0661E 02	2.4887E 03	1.1566E 03	2.4842E 03
31	1.0521E 02	1.1090E 00	5.0983E 02	3.4609E 01	8.1803E-04	5.1330E 02	2.6591E 03	1.1567E 03	2.6533E 03
32	1.0520E 02	1.1087E 00	4.5051E 02	3.3485E 01	9.2565E-04	5.1333E 02	2.6607E 03	1.1567E 03	2.6539E 03
33	1.0518E 02	1.1085E 00	3.9636E 02	3.2548E 01	1.0520E-03	5.1332E 02	2.6616E 03	1.1567E 03	2.6537E 03
34	1.0517E 02	1.1082E 00	3.4738E 02	3.1864E 01	1.2001E-03	5.3047E 02	3.1965E 03	1.1570E 03	3.1834E 03
	1.0516E 02	1.1080E 00	3.0235E 02						

FIGURE 10. SAMPLE OUTPUT - ROW-BY-ROW DATA
Continuation

	RENOS	HEAT FLUX	SF	GFLOW	TB1	TB2	HEFF	TBNPR	CUM DELP
1	2.3844E 03	5.3616E 03	1.2389E-01	1.0531E 03	9.3000E 01	9.6783E 01	2.0147E 07	1.8850E 01	1.3864E-01
2	2.3299E 03	5.3439E 03	1.2440E-01	1.0290E 03	9.3000E 01	9.6771E 01	1.8314E 07	1.8396E 01	1.7473E-01
3	2.2758E 03	5.3283E 03	1.2494E-01	1.0050E 03	9.3000E 01	9.6759E 01	1.7575E 07	1.7943E 01	2.0935E-01
4	2.2220E 03	5.3133E 03	1.2549E-01	9.8118E 02	9.3000E 01	9.6748E 01	1.5131E 07	1.7489E 01	2.4254E-01
5	2.1686E 03	5.3208E 03	1.2607E-01	9.5754E 02	9.3000E 01	9.6749E 01	1.4192E 07	1.7036E 01	2.7431E-01
6	2.1151E 03	5.3073E 03	1.2668E-01	9.3386E 02	9.3000E 01	9.6742E 01	1.3246E 07	1.6582E 01	3.0472E-01
7	2.0619E 03	5.2934E 03	1.2731E-01	9.1034E 02	9.3000E 01	9.6733E 01	1.2546E 07	1.6129E 01	3.3377E-01
8	2.0091E 03	5.2808E 03	1.2798E-01	8.8699E 02	9.3000E 01	9.6723E 01	1.1815E 07	1.5675E 01	3.6154E-01
9	1.9567E 03	5.2687E 03	1.2868E-01	8.6381E 02	9.3000E 01	9.6714E 01	1.0873E 07	1.5222E 01	3.8803E-01
10	1.9046E 03	5.2572E 03	1.2940E-01	8.4080E 02	9.3000E 01	9.6706E 01	1.0144E 07	1.4769E 01	4.1330E-01
11	1.8530E 03	5.2709E 03	1.3017E-01	8.1796E 02	9.3000E 01	9.6717E 01	9.3793E 06	1.4315E 01	4.3736E-01
12	1.8012E 03	5.2599E 03	1.3098E-01	7.9506E 02	9.3000E 01	9.6709E 01	8.7601E 06	1.3862E 01	4.6027E-01
13	1.7498E 03	5.2498E 03	1.3183E-01	7.7235E 02	9.3000E 01	9.6701E 01	8.2021E 06	1.3408E 01	4.8203E-01
14	1.6989E 03	5.2402E 03	1.3272E-01	7.4982E 02	9.3000E 01	9.6694E 01	7.4765E 06	1.2955E 01	5.0269E-01
15	1.6482E 03	5.2310E 03	1.3367E-01	7.2748E 02	9.3000E 01	9.6687E 01	6.9605E 06	1.2501E 01	5.2229E-01
16	1.5982E 03	5.2224E 03	1.3466E-01	7.0535E 02	9.3000E 01	9.6681E 01	6.3432E 06	1.2048E 01	5.4086E-01
17	1.5485E 03	5.2141E 03	1.3571E-01	6.8344E 02	9.3000E 01	9.6675E 01	5.8347E 06	1.1595E 01	5.5846E-01
18	1.4995E 03	5.2360E 03	1.3681E-01	6.6176E 02	9.3000E 01	9.6692E 01	5.3155E 06	1.1141E 01	5.7509E-01
19	1.4503E 03	5.2283E 03	1.3799E-01	6.4005E 02	9.3000E 01	9.6686E 01	4.8531E 06	1.0688E 01	5.9079E-01
20	1.4017E 03	5.2210E 03	1.3923E-01	6.1860E 02	9.3000E 01	9.6681E 01	4.4319E 06	1.0234E 01	6.0561E-01
21	1.3538E 03	5.2144E 03	1.4055E-01	5.9745E 02	9.3000E 01	9.6676E 01	4.0082E 06	9.7808E 00	6.1955E-01
22	1.3066E 03	5.2079E 03	1.4194E-01	5.7662E 02	9.3000E 01	9.6671E 01	3.6222E 06	9.3273E 00	6.3269E-01
23	1.2503E 03	5.2019E 03	1.4341E-01	5.5615E 02	9.3000E 01	9.6667E 01	3.2568E 06	8.8739E 00	6.4502E-01
24	1.2148E 03	5.1962E 03	1.4496E-01	5.3610E 02	9.3000E 01	9.6663E 01	2.9184E 06	8.4204E 00	6.5662E-01
25	1.1704E 03	5.2290E 03	1.4659E-01	5.1651E 02	9.3000E 01	9.6687E 01	2.6069E 06	7.9670E 00	6.6750E-01
26	1.1265E 03	5.2237E 03	1.4833E-01	4.9711E 02	9.3000E 01	9.6683E 01	2.3158E 06	7.5135E 00	6.7772E-01
27	1.0839E 03	5.2186E 03	1.5015E-01	4.7833E 02	9.3000E 01	9.6679E 01	2.0416E 06	7.0601E 00	6.8732E-01
28	1.0430E 03	5.2138E 03	1.5203E-01	4.6029E 02	9.3000E 01	9.6676E 01	1.8030E 06	6.6067E 00	6.9629E-01
29	1.0042E 03	5.2090E 03	1.5397E-01	4.4315E 02	9.3000E 01	9.6672E 01	1.5830E 06	6.1532E 00	7.0473E-01
30	9.6779E 02	5.2044E 03	1.5592E-01	4.2711E 02	9.3000E 01	9.6669E 01	1.3840E 06	5.6998E 00	7.1265E-01
31	9.3455E 02	5.2569E 03	1.5783E-01	4.1245E 02	9.3000E 01	9.6706E 01	1.2026E 06	5.2463E 00	7.2015E-01
32	9.0400E 02	5.2527E 03	1.5971E-01	3.9898E 02	9.3000E 01	9.6703E 01	1.0449E 06	4.7929E 00	7.2725E-01
33	8.7852E 02	5.2479E 03	1.6138E-01	3.8776E 02	9.3000E 01	9.6699E 01	9.0358E 05	4.3395E 00	7.3404E-01
34	8.5987E 02	5.3877E 03	1.6267E-01	3.7955E 02	9.3000E 01	9.6799E 01	7.7720E 05	3.8860E 00	7.4060E-01

FIGURE 10. SAMPLE OUTPUT - ROW-BY-ROW DATA
Continuation

CIRCULAR CONDENSER 6 SECTOR MODEL SAMPLE PROBLEM FOR REPORT J = 6

	STSAT	PMIX	WS	VEL	RC	UN	SHNF	SHI	1/ROUT
1	1.0589E 02	1.1311E 00	4.6204E 03	8.5394E 01	8.9171E-05	4.7797E 02	1.9200E 03	1.1567E 03	1.9198E 03
2	1.0585E 02	1.1297E 00	4.4083E 03	8.3829E 01	9.3460E-05	4.7883E 02	1.9342E 03	1.1566E 03	1.9340E 03
3	1.0581E 02	1.1285E 00	4.2017E 03	8.2006E 01	9.8056E-05	4.7886E 02	1.9347E 03	1.1566E 03	1.9345E 03
4	1.0577E 02	1.1272E 00	4.0007E 03	8.0190E 01	1.0298E-04	4.7992E 02	1.9523E 03	1.1566E 03	1.9520E 03
5	1.0574E 02	1.1261E 00	3.8051E 03	7.8376E 01	1.0828E-04	4.7995E 02	1.9529E 03	1.1565E 03	1.9527E 03
6	1.0571E 02	1.1249E 00	3.6150E 03	7.6569E 01	1.1397E-04	4.8003E 02	1.9543E 03	1.1565E 03	1.9540E 03
7	1.0567E 02	1.1239E 00	3.4304E 03	7.4770E 01	1.2010E-04	4.8114E 02	1.9728E 03	1.1565E 03	1.9725E 03
8	1.0564E 02	1.1228E 00	3.2510E 03	7.2973E 01	1.2673E-04	4.8118E 02	1.9736E 03	1.1565E 03	1.9733E 03
9	1.0561E 02	1.1218E 00	3.0771E 03	7.1186E 01	1.3389E-04	4.8233E 02	1.9931E 03	1.1565E 03	1.9928E 03
10	1.0558E 02	1.1209E 00	2.9083E 03	6.9401E 01	1.4166E-04	4.8236E 02	1.9939E 03	1.1564E 03	1.9935E 03
11	1.0556E 02	1.1200E 00	2.7448E 03	6.7627E 01	1.5009E-04	4.8242E 02	1.9951E 03	1.1564E 03	1.9947E 03
12	1.0553E 02	1.1191E 00	2.5867E 03	6.5865E 01	1.5926E-04	4.8364E 02	2.0160E 03	1.1564E 03	2.0155E 03
13	1.0550E 02	1.1183E 00	2.4336E 03	6.4107E 01	1.6928E-04	4.8368E 02	2.0168E 03	1.1564E 03	2.0163E 03
14	1.0548E 02	1.1175E 00	2.2858E 03	6.2363E 01	1.8022E-04	4.8496E 02	2.0393E 03	1.1564E 03	2.0387E 03
15	1.0546E 02	1.1168E 00	2.1430E 03	6.0625E 01	1.9224E-04	4.8500E 02	2.0402E 03	1.1564E 03	2.0396E 03
16	1.0544E 02	1.1161E 00	2.0054E 03	5.8903E 01	2.0542E-04	4.8505E 02	2.0412E 03	1.1564E 03	2.0405E 03
17	1.0541E 02	1.1154E 00	1.8730E 03	5.7199E 01	2.1994E-04	4.8641E 02	2.0655E 03	1.1564E 03	2.0648E 03
18	1.0539E 02	1.1148E 00	1.7455E 03	5.5505E 01	2.3600E-04	4.8789E 02	2.0924E 03	1.1564E 03	2.0916E 03
19	1.0538E 02	1.1142E 00	1.6229E 03	5.3823E 01	2.5383E-04	4.8794E 02	2.0935E 03	1.1564E 03	2.0927E 03
20	1.0536E 02	1.1136E 00	1.5054E 03	5.2166E 01	2.7363E-04	4.8955E 02	2.1235E 03	1.1564E 03	2.1225E 03
21	1.0534E 02	1.1131E 00	1.3928E 03	5.0524E 01	2.9575E-04	4.9135E 02	2.1578E 03	1.1564E 03	2.1567E 03
22	1.0532E 02	1.1125E 00	1.2850E 03	4.8901E 01	3.2055E-04	4.9141E 02	2.1592E 03	1.1564E 03	2.1579E 03
23	1.0531E 02	1.1121E 00	1.1823E 03	4.7312E 01	3.4839E-04	4.9341E 02	2.1983E 03	1.1564E 03	2.1969E 03
24	1.0529E 02	1.1116E 00	1.0844E 03	4.5749E 01	3.7984E-04	4.9348E 02	2.1999E 03	1.1564E 03	2.1983E 03
25	1.0528E 02	1.1112E 00	9.9155E 02	4.4231E 01	4.1538E-04	4.9577E 02	2.2463E 03	1.1564E 03	2.2444E 03
26	1.0527E 02	1.1108E 00	9.0349E 02	4.2751E 01	4.5584E-04	4.9853E 02	2.3041E 03	1.1565E 03	2.3020E 03
27	1.0526E 02	1.1104E 00	8.2015E 02	4.1315E 01	5.0214E-04	4.9868E 02	2.3076E 03	1.1565E 03	2.3052E 03
28	1.0524E 02	1.1100E 00	7.4191E 02	3.9952E 01	5.5507E-04	5.0209E 02	2.3825E 03	1.1565E 03	2.3796E 03
29	1.0523E 02	1.1097E 00	6.6835E 02	3.8656E 01	6.1612E-04	5.0210E 02	2.3831E 03	1.1565E 03	2.3798E 03
30	1.0522E 02	1.1093E 00	5.9990E 02	3.7469E 01	6.8637E-04	5.0660E 02	2.4881E 03	1.1566E 03	2.4840E 03
31	1.0521E 02	1.1090E 00	5.3608E 02	3.6388E 01	7.6802E-04	5.0661E 02	2.4891E 03	1.1566E 03	2.4844E 03
32	1.0520E 02	1.1087E 00	4.7740E 02	3.5481E 01	8.6235E-04	5.1331E 02	2.6597E 03	1.1567E 03	2.6536E 03
33	1.0519E 02	1.1085E 00	4.2324E 02	3.4754E 01	9.7259E-04	5.1334E 02	2.6612E 03	1.1567E 03	2.6543E 03
34	1.0518E 02	1.1082E 00	3.7425E 02	3.4327E 01	1.0998E-03	5.3051E 02	3.1963E 03	1.1570E 03	3.1848E 03
	1.0516E 02	1.1079E 00	3.2921E 02						

FIGURE 10. SAMPLE OUTPUT - ROW-BY-ROW DATA
Continuation

	RENOS	HEAT FLUX	SF	GFLOW	TB1	TB2	HEFF	TBNPR	CUM DELP
1	2.3538E 03	5.2298E 03	1.2418E-01	1.0396E 03	9.3000E 01	9.6690E 01	2.1499E 07	1.8850E 01	1.3777E-01
2	2.3013E 03	5.2222E 03	1.2468E-01	1.0163E 03	9.3000E 01	9.6691E 01	1.7202E 07	1.8396E 01	1.7307E-01
3	2.2490E 03	5.2067E 03	1.2521E-01	9.9317E 02	9.3000E 01	9.6670E 01	1.6263E 07	1.7943E 01	2.0695E-01
4	2.1971E 03	5.2014E 03	1.2576E-01	9.7019E 02	9.3000E 01	9.6667E 01	1.5050E 07	1.7489E 01	2.3947E-01
5	2.1454E 03	5.1874E 03	1.2633E-01	9.4731E 02	9.3000E 01	9.6657E 01	1.4405E 07	1.7036E 01	2.7065E-01
6	2.0941E 03	5.1743E 03	1.2693E-01	9.2460E 02	9.3000E 01	9.6647E 01	1.3445E 07	1.6582E 01	3.0049E-01
7	2.0431E 03	5.1708E 03	1.2755E-01	9.0207E 02	9.3000E 01	9.6645E 01	1.2438E 07	1.6129E 01	3.2907E-01
8	1.9924E 03	5.1584E 03	1.2820E-01	8.7963E 02	9.3000E 01	9.6636E 01	1.1820E 07	1.5675E 01	3.5641E-01
9	1.9421E 03	5.1565E 03	1.2888E-01	8.5738E 02	9.3000E 01	9.6635E 01	1.0920E 07	1.5222E 01	3.8254E-01
10	1.8920E 03	5.1452E 03	1.2959E-01	8.3522E 02	9.3000E 01	9.6627E 01	1.0270E 07	1.4769E 01	4.0750E-01
11	1.8423E 03	5.1346E 03	1.3033E-01	8.1326E 02	9.3000E 01	9.6619E 01	9.5558E 06	1.4315E 01	4.3134E-01
12	1.7931E 03	5.1345E 03	1.3111E-01	7.9149E 02	9.3000E 01	9.6619E 01	8.8101E 06	1.3862E 01	4.5406E-01
13	1.7441E 03	5.1246E 03	1.3193E-01	7.6984E 02	9.3000E 01	9.6612E 01	8.1885E 06	1.3408E 01	4.7569E-01
14	1.6956E 03	5.1261E 03	1.3278E-01	7.4841E 02	9.3000E 01	9.6614E 01	7.5968E 06	1.2955E 01	4.9629E-01
15	1.6474E 03	5.1172E 03	1.3368E-01	7.2710E 02	9.3000E 01	9.6607E 01	6.9905E 06	1.2501E 01	5.1587E-01
16	1.5997E 03	5.1087E 03	1.3463E-01	7.0603E 02	9.3000E 01	9.6601E 01	6.4534E 06	1.2048E 01	5.3447E-01
17	1.5526E 03	5.1121E 03	1.3562E-01	6.8522E 02	9.3000E 01	9.6604E 01	5.9654E 06	1.1595E 01	5.5214E-01
18	1.5058E 03	5.1170E 03	1.3666E-01	6.6458E 02	9.3000E 01	9.6607E 01	5.4569E 06	1.1141E 01	5.6889E-01
19	1.4595E 03	5.1098E 03	1.3776E-01	6.4412E 02	9.3000E 01	9.6601E 01	5.0069E 06	1.0688E 01	5.8476E-01
20	1.4139E 03	5.1165E 03	1.3891E-01	6.2398E 02	9.3000E 01	9.6606E 01	4.5427E 06	1.0234E 01	5.9979E-01
21	1.3588E 03	5.1252E 03	1.4013E-01	6.0408E 02	9.3000E 01	9.6612E 01	4.1300E 06	9.7808E 00	6.1401E-01
22	1.3243E 03	5.1191E 03	1.4141E-01	5.8442E 02	9.3000E 01	9.6608E 01	3.7475E 06	9.3273E 00	6.2746E-01
23	1.2808E 03	5.1301E 03	1.4275E-01	5.6520E 02	9.3000E 01	9.6616E 01	3.3871E 06	8.8739E 00	6.4014E-01
24	1.2380E 03	5.1246E 03	1.4416E-01	5.4633E 02	9.3000E 01	9.6611E 01	3.0517E 06	8.4204E 00	6.5210E-01
25	1.1965E 03	5.1386E 03	1.4562E-01	5.2802E 02	9.3000E 01	9.6621E 01	2.7289E 06	7.9670E 00	6.6341E-01
26	1.1561E 03	5.1572E 03	1.4714E-01	5.1018E 02	9.3000E 01	9.6634E 01	2.4442E 06	7.5135E 00	6.7407E-01
27	1.1169E 03	5.1524E 03	1.4872E-01	4.9289E 02	9.3000E 01	9.6634E 01	2.1771E 06	7.0601E 00	6.8414E-01
28	1.0797E 03	5.1767E 03	1.5033E-01	4.7649E 02	9.3000E 01	9.6650E 01	1.9351E 06	6.6067E 00	6.9365E-01
29	1.0444E 03	5.1718E 03	1.5196E-01	4.6091E 02	9.3000E 01	9.6647E 01	1.7073E 06	6.1532E 00	7.0267E-01
30	1.0121E 03	5.2055E 03	1.5356E-01	4.4665E 02	9.3000E 01	9.6670E 01	1.5062E 06	5.6998E 00	7.1123E-01
31	9.8264E 02	5.2010E 03	1.5510E-01	4.3367E 02	9.3000E 01	9.6667E 01	1.3243E 06	5.2463E 00	7.1936E-01
32	9.5791E 02	5.2534E 03	1.5647E-01	4.2277E 02	9.3000E 01	9.6703E 01	1.1602E 06	4.7929E 00	7.2717E-01
33	9.3805E 02	5.2490E 03	1.5762E-01	4.1402E 02	9.3000E 01	9.6700E 01	1.0166E 06	4.3395E 00	7.3473E-01
34	9.2632E 02	5.3887E 03	1.5832E-01	4.0886E 02	9.3000E 01	9.6799E 01	8.8632E 05	3.8860E 00	7.4213E-01

FIGURE 10. SAMPLE OUTPUT - ROW-BY-ROW DATA
Continuation

CIRCULAR CONDENSER 6 SECTOR MODEL SAMPLE PROBLEM FOR REPORT COOLER SECTION

	STSATC	PMIXC	WSC	VELC	RCC	UNC	SHNFC	SHIC	1/ROUTC
1	1.0491E 02	1.0996E 00	3.8904E 03	1.2700E 02	1.2836E-03	4.8115E 02	1.9776E 03	1.1558E 03	1.9751E 03
2	1.0483E 02	1.0970E 00	3.7756E 03	1.2354E 02	1.3225E-03	4.8117E 02	1.9784E 03	1.1557E 03	1.9758E 03
3	1.0475E 02	1.0944E 00	3.6616E 03	1.2007E 02	1.3637E-03	4.8222E 02	1.9966E 03	1.1556E 03	1.9939E 03
4	1.0467E 02	1.0920E 00	3.5481E 03	1.1660E 02	1.4072E-03	4.8249E 02	2.0015E 03	1.1555E 03	1.9986E 03
5	1.0460E 02	1.0897E 00	3.4353E 03	1.1311E 02	1.4534E-03	4.8356E 02	2.0204E 03	1.1555E 03	2.0172E 03
6	1.0453E 02	1.0876E 00	3.3230E 03	1.0962E 02	1.5024E-03	4.8380E 02	2.0249E 03	1.1554E 03	2.0216E 03
7	1.0447E 02	1.0856E 00	3.2113E 03	1.0613E 02	1.5546E-03	4.8491E 02	2.0449E 03	1.1554E 03	2.0414E 03
8	1.0441E 02	1.0837E 00	3.1000E 03	1.0262E 02	1.6103E-03	4.8513E 02	2.0492E 03	1.1553E 03	2.0455E 03
9	1.0435E 02	1.0819E 00	2.9892E 03	9.9111E 01	1.6699E-03	4.8630E 02	2.0706E 03	1.1553E 03	2.0665E 03
10	1.0430E 02	1.0802E 00	2.8787E 03	9.5592E 01	1.7339E-03	4.8650E 02	2.0747E 03	1.1552E 03	2.0704E 03
11	1.0425E 02	1.0786E 00	2.7688E 03	9.2070E 01	1.8026E-03	4.8773E 02	2.0976E 03	1.1552E 03	2.0930E 03
12	1.0420E 02	1.0772E 00	2.6591E 03	8.8538E 01	1.8768E-03	4.8789E 02	2.1010E 03	1.1552E 03	2.0961E 03
13	1.0416E 02	1.0758E 00	2.5498E 03	8.5004E 01	1.9571E-03	4.8922E 02	2.1264E 03	1.1551E 03	2.1209E 03
14	1.0411E 02	1.0746E 00	2.4407E 03	8.1461E 01	2.0444E-03	4.8926E 02	2.1275E 03	1.1551E 03	2.1217E 03
15	1.0408E 02	1.0734E 00	2.3320E 03	7.7916E 01	2.1395E-03	4.9080E 02	2.1574E 03	1.1551E 03	2.1511E 03
16	1.0404E 02	1.0723E 00	2.2233E 03	7.4362E 01	2.2438E-03	4.9083E 02	2.1587E 03	1.1551E 03	2.1518E 03
17	1.0401E 02	1.0713E 00	2.1151E 03	7.0807E 01	2.3584E-03	4.9248E 02	2.1916E 03	1.1551E 03	2.1840E 03
18	1.0397E 02	1.0704E 00	2.0068E 03	6.7241E 01	2.4853E-03	4.9252E 02	2.1930E 03	1.1550E 03	2.1848E 03
19	1.0395E 02	1.0696E 00	1.8989E 03	6.3676E 01	2.6262E-03	4.9431E 02	2.2297E 03	1.1550E 03	2.2204E 03
20	1.0392E 02	1.0689E 00	1.7909E 03	6.0099E 01	2.7842E-03	4.9434E 02	2.2313E 03	1.1550E 03	2.2211E 03
21	1.0389E 02	1.0682E 00	1.6831E 03	5.6523E 01	2.9619E-03	4.9631E 02	2.2732E 03	1.1550E 03	2.2615E 03
22	1.0387E 02	1.0676E 00	1.5753E 03	5.2936E 01	3.1640E-03	4.9633E 02	2.2749E 03	1.1550E 03	2.2621E 03
23	1.0385E 02	1.0670E 00	1.4676E 03	4.9350E 01	3.3952E-03	4.9857E 02	2.3241E 03	1.1550E 03	2.3092E 03
24	1.0383E 02	1.0666E 00	1.3598E 03	4.5751E 01	3.6634E-03	4.9857E 02	2.3262E 03	1.1550E 03	2.3094E 03
25	1.0381E 02	1.0661E 00	1.2522E 03	4.2154E 01	3.9770E-03	5.0117E 02	2.3862E 03	1.1550E 03	2.3661E 03
26	1.0379E 02	1.0658E 00	1.1443E 03	3.8543E 01	4.3503E-03	5.0115E 02	2.3887E 03	1.1550E 03	2.3656E 03
27	1.0377E 02	1.0655E 00	1.0367E 03	3.4936E 01	4.8000E-03	5.0443E 02	2.4689E 03	1.1550E 03	2.4402E 03
28	1.0375E 02	1.0652E 00	9.2861E 02	3.1312E 01	5.3556E-03	5.0422E 02	2.4695E 03	1.1550E 03	2.4355E 03
29	1.0373E 02	1.0650E 00	8.2079E 02	2.7693E 01	6.0548E-03	5.0839E 02	2.5806E 03	1.1551E 03	2.5357E 03
30	1.0370E 02	1.0648E 00	7.1245E 02	2.4055E 01	6.9691E-03	5.0798E 02	2.5814E 03	1.1550E 03	2.5257E 03
31	1.0367E 02	1.0646E 00	6.0446E 02	2.0426E 01	8.2040E-03	5.1397E 02	2.7627E 03	1.1551E 03	2.6805E 03
32	1.0363E 02	1.0645E 00	4.9570E 02	1.6771E 01	9.9860E-03	5.1308E 02	2.7684E 03	1.1551E 03	2.6569E 03
33	1.0357E 02	1.0644E 00	3.8754E 02	1.3134E 01	1.2738E-02	5.2766E 02	3.3331E 03	1.1553E 03	3.0992E 03
	1.0346E 02	1.0644E 00	2.7748E 02						

	RENOSC	HEAT FLUX	SFC	GFLOWC	TB1	TB2	HEFFC	TBNPR	CUM DELP
1	3.4036E 03	4.8584E 03	1.1733E-01	1.5018E 03	9.3000E 01	9.6430E 01	1.5736E 06	1.1000E 01	9.7153E-01
2	3.3337E 03	4.8256E 03	1.1779E-01	1.4575E 03	9.3000E 01	9.6402E 01	1.5103E 06	1.1000E 01	1.0459E 00
3	3.2044E 03	4.8022E 03	1.1828E-01	1.4136E 03	9.3000E 01	9.6385E 01	1.4391E 06	1.1000E 01	1.1163E 00
4	3.1055E 03	4.7731E 03	1.1880E-01	1.3698E 03	9.3000E 01	9.6366E 01	1.3641E 06	1.1000E 01	1.1830E 00
5	3.0072E 03	4.7531E 03	1.1934E-01	1.3263E 03	9.3000E 01	9.6350E 01	1.3020E 06	1.1000E 01	1.2460E 00
6	2.9093E 03	4.7269E 03	1.1993E-01	1.2830E 03	9.3000E 01	9.6334E 01	1.2411E 06	1.1000E 01	1.3055E 00

FIGURE 10. SAMPLE OUTPUT - ROW-BY-ROW DATA
Continuation

7	2.6118E 03	4.7102E 03	1.2055E-01	1.2400E 03	9.3000E 01	9.6320E 01	1.1775E 06	1.1000E 01	1.3616E 00
8	2.7147E 03	4.6866E 03	1.2121E-01	1.1970E 03	9.3000E 01	9.6305E 01	1.1154E 06	1.1000E 01	1.4143E 00
9	2.6180E 03	4.6731E 03	1.2192E-01	1.1543E 03	9.3000E 01	9.6294E 01	1.0542E 06	1.1000E 01	1.4638E 00
10	2.5216E 03	4.6523E 03	1.2268E-01	1.1118E 03	9.3000E 01	9.6281E 01	1.0020E 06	1.1000E 01	1.5101E 00
11	2.4255E 03	4.6418E 03	1.2350E-01	1.0694E 03	9.3000E 01	9.6272E 01	9.4109E 05	1.1000E 01	1.5534E 00
12	2.3297E 03	4.6237E 03	1.2438E-01	1.0271E 03	9.3000E 01	9.6258E 01	8.8501E 05	1.1000E 01	1.5938E 00
13	2.2342E 03	4.6159E 03	1.2534E-01	9.8494E 02	9.3000E 01	9.6254E 01	8.3151E 05	1.1000E 01	1.6314E 00
14	2.1388E 03	4.5990E 03	1.2638E-01	9.4287E 02	9.3000E 01	9.6242E 01	7.7893E 05	1.1000E 01	1.6663E 00
15	2.0438E 03	4.5951E 03	1.2751E-01	9.0096E 02	9.3000E 01	9.6239E 01	7.2766E 05	1.1000E 01	1.6985E 00
16	1.9488E 03	4.5806E 03	1.2875E-01	8.5909E 02	9.3000E 01	9.6228E 01	6.7554E 05	1.1000E 01	1.7283E 00
17	1.8541E 03	4.5795E 03	1.3012E-01	8.1734E 02	9.3000E 01	9.6228E 01	6.2685E 05	1.1000E 01	1.7556E 00
18	1.7594E 03	4.5668E 03	1.3163E-01	7.7561E 02	9.3000E 01	9.6219E 01	5.7889E 05	1.1000E 01	1.7806E 00
19	1.6649E 03	4.5686E 03	1.3331E-01	7.3399E 02	9.3000E 01	9.6220E 01	5.3192E 05	1.1000E 01	1.8035E 00
20	1.5704E 03	4.5576E 03	1.3519E-01	6.9235E 02	9.3000E 01	9.6212E 01	4.8600E 05	1.1000E 01	1.8242E 00
21	1.4761E 03	4.5624E 03	1.3731E-01	6.5082E 02	9.3000E 01	9.6215E 01	4.4228E 05	1.1000E 01	1.8429E 00
22	1.3817E 03	4.5529E 03	1.3972E-01	6.0924E 02	9.3000E 01	9.6209E 01	3.9957E 05	1.1000E 01	1.8597E 00
23	1.2875E 03	4.5608E 03	1.4247E-01	5.6775E 02	9.3000E 01	9.6214E 01	3.5847E 05	1.1000E 01	1.8746E 00
24	1.1931E 03	4.5521E 03	1.4567E-01	5.2618E 02	9.3000E 01	9.6208E 01	3.1917E 05	1.1000E 01	1.8879E 00
25	1.0989E 03	4.5634E 03	1.4940E-01	4.8469E 02	9.3000E 01	9.6216E 01	2.8091E 05	1.1000E 01	1.8996E 00
26	1.0044E 03	4.5550E 03	1.5385E-01	4.4310E 02	9.3000E 01	9.6210E 01	2.4467E 05	1.1000E 01	1.9097E 00
27	9.1014E 02	4.5711E 03	1.5921E-01	4.0159E 02	9.3000E 01	9.6223E 01	2.0986E 05	1.1000E 01	1.9184E 00
28	8.1551E 02	4.5608E 03	1.6583E-01	3.5993E 02	9.3000E 01	9.6217E 01	1.7697E 05	1.1000E 01	1.9259E 00
29	7.2109E 02	4.5831E 03	1.7416E-01	3.1837E 02	9.3000E 01	9.6231E 01	1.4589E 05	1.1000E 01	1.9321E 00
30	6.2621E 02	4.5687E 03	1.8505E-01	2.7660E 02	9.3000E 01	9.6224E 01	1.1702E 05	1.1000E 01	1.9372E 00
31	5.3162E 02	4.6009E 03	1.9976E-01	2.3496E 02	9.3000E 01	9.6243E 01	9.0171E 04	1.1000E 01	1.9413E 00
32	4.3637E 02	4.5761E 03	2.2099E-01	1.9303E 02	9.3000E 01	9.6227E 01	6.5954E 04	1.1000E 01	1.9445E 00
33	3.4163E 02	4.6566E 03	2.5376E-01	1.5133E 02	9.3000E 01	9.6284E 01	4.4162E 04	1.1000E 01	1.9469E 00

FIGURE 10. SAMPLE OUTPUT - ROW-BY-ROW DATA
Continuation

average brine temperature leaving the respective sections is listed under brine average temperature column and represents flow weighted averages.

The values DTCND2, DTCOI2 and DLTOT2 are log mean Δt's calculated by using the vapor temperature, the average entering brine temperature and the average exit brine temperatures for the condenser, the gas cooler and the combined sections, respectively. Since these might be considered the standard fashion of calculating log mean Δt's, it can be seen that the difference between these values and the back calculated log mean Δt's mentioned above represent the average loss in thermal driving force due to pressure drops within the bundle. The values UPCOND, UPCOOL, and UPAVG are the heat transfer coefficients for the condenser, gas cooler, and combined sections, respectively, corresponding to DTCND2, DTCOI2, and DLTOT2.

In Figure 10 is shown the row-by-row output for section 1 of a circular bundle as indicated by the label "j = 1." The column tables are described briefly as follows:

First column is the row number.

STSAT	vapor temperature entering the row, °F
PMIX	pressure of vapor plus noncondensable, psia
WS	steam flow in the sector, lb/hr
VEL	vapor velocity at the minimum cross section, ft/sec
RC	fraction of noncondensables by weight
UN	overall heat transfer coefficient for the "typical" tube in the row
SHNF	condensing coefficient, Btu/hr-ft^2-°F
SHI	tube side coefficeint, Btu/hr-ft^2-°F
1/ROUT	shell side film coefficient composed of gas film plus condensing film, Btu/hr-ft^2-°F
RENOS	Reynolds number based on mass flow at minimum cross section, dimensionless
HEAT FLUX	heat flux per square foot of tube, Btu/hr-ft^2
SF	friction factor, dimensionless

GFLOW	mass flow rate of vapor at minimum cross section, lb/hr
TB1	temperature of brine at inlet end of tube, °F
TB2	temperature of brine at the exit end of tube, °F
HEFF	heat transfer coefficient for the noncondensable film, Btu/hr-ft^2-°F
TBNPR	number of tubes per row
CUMDELP	total pressure drop from entrance (row 1) to row N, in. H_2O.

I. Error Messages

During the operation of the code, a number of messages may be printed. These messages indicate various conditions or errors encountered.

1. _TUBE RØWS IN CNDSNR, WHICH EXCEEDS PRØGRAM DIMENSIONS. PROCEEDING TO NEXT CASE.

   From MAIN, indicates an input error of too many tubes specified for condenser section. Maximum allowable number of rows of tubes is 98. Code terminates the case and proceeds to next case.

2. _TUBE RØWS IN CØØLER, WHICH EXCEEDS PRØGRAM DIMENSIONS. PRØCEEDING TØ NEXT CASE.

   From MAIN, similar to above message.

3. ****INPUT ERRØR, INCØRRECT NØ ØF RØWS IN CØNDENSER, NRWS = n_1 IHNØ = n_2.

   From MAIN, this indicates that the input coolant temperatures were read in and the code calculated a different number of rows of tubes than specified on input. n_1 is number specified on input, n_2 is number calculated. Codes terminates the case and proceeds to the next case.

4. ***SATURATED STEAM PRESSURE HAS GØNE NEGATIVE, RØW n_1 SECTØR n_2 PMIX = n_3 WS = n_4

   From SECALC this message indicates that the steam pressure at the indicated row of sector has been calculated as negative. The code stops at the row in the sector and proceeds to the next sector for further calculations. Note: total pressure of steam plus noncondensables may not be negative, which is the value printed out.

5. Case Identification, IDENT

   I = n_1 J = n_2

   NØ CØNVERGENCE FØR WCND (n_1, n_2)

   From SECALC no convergence in the loop for correction for sensible heat was achieved in 50 tries. Condition occurred in row n_1, sector n_2.

6. Case Identification, NØ CØNVERGENCE IN CØND. DELTAP (IPLØØP)

   From SECALC, the code failed in 20 tries to adjust steam flow to the sectors so that the pressure drop across the sectors agreed to within one percent. Note: Message may be repeated for each iteration required for adjusting total inlet steam or tube length; condition may not exist on final pass although it could be printed several times on early passes.

7. STEAM TEMP. FALLEN BELØW BRINE INLET TEMP., STSAT = n_1

   RØW = n_2 SECTØR = n_3

   From SECALC, this message indicates that the steam temperature is less than the inlet coolant temperature in row n_2 and sector n_3. Printed only once in an iteration on the condenser delta P loop. When condition occurs the calculations are terminated for the sector, but further sectors are calculated; and as noted above, the final iteration does not necessarily experience the condition.

8. ****INCØRRECT NØ ØF RØWS IN CØØLER, NRWSC = n_1 IVNØC = n_2

From CØØLEX, as in message 3, this indicates an input error. Action is the same; n_1 is input value, n_2 is calculated.

9. NØ CØNVERGENCE FØR WCNDC (n_1)

From CØØLEX, same as message 5, only in cooler calculation, n_1 is row in which condition occurred.

10. ****STEAM VELØCITY IN FIRST RØW ØF CØØLER TUBES EXCEEDS MAX ALLØWABLE, VELC(1) = n_1 n_2 RØWS ØF TUBES n_2 TUBES PER RØW

From CØØLEX, this message indicates that the maximum steam velocity in the cooler has exceeded the built-in limit of 150 feet per second. Action as indicated in message 11 is only taken for the first stage.

11. CØØLER DIMENSIØNS ADJUSTED TØ LØWER STEAM VELØCITY, VELC(1) = n_1 n_2 RØWS ØF TUBES n_3 TUBES PER RØW

From CØØLEX, for the first stage of a series (or a single stage) the cooler dimensions are adjusted to increase the tubes per row and reduce the number of rows in order that the steam velocity remains within the allowed limit.

12. ****SATURATED STEAM PRESSURE IN CØØLER HAS GØNE NEGATIVE, PMIXC = n_1 RØW n_2

From CØØLEX, this message indicates that the calculated steam pressure has become negative in the indicated row in the cooler. The printed value of pressure, PMIXC, is the pressure of the steam plus noncondensable and may not be negative. Calculations in the cooler are discontinued and the program continues normally.

13. NØ CØNVERGENCE ØN EXITFR IN 10 TRIES
WSIMAX = n_1 WSIMIN = n_2 EXFR1 = n_3

From ADJUST, this indicates that the code was unable to arrive at a suitable inlet flow of steam to give the desired exit fraction. WSIMAX and WSIMIN are the values of steam flow that should bracket the desired value. EXFR1 is the last exit fraction of steam calculated, as a percentage of inlet flow.

14. NØ CØNVERGENCE FØR EXITFR AFTER 10 TRIES, ALSTMX = n_1
ALSTMN = n_2 ALST = n_3 EXFR1 = n_4

From ADJUST, SAME AS MESSAGE 13, except for tube length.

15. (a) NØ CØNVERGENCE IN UEST, UEST = n_1 UTEST = n_2

(b) NØ CØNVERGENCE IN DELFLM, DELFLM = n_3 SECTØR = n_4
RØW = n_5

(c) NØ CØNVERGENCE IN FILM TEMPERATURES, DLGFLM = n_6
UEST = n_1 UTEST = n_2 SECTØR = n_4 RØW = n_5

From HETTRN, these messages indicate a failure in this subroutine for convergence between successive iterations of the indicated variables. A limit of 10 trials total for the above variables is set. Only one message will be printed, but a message can be printed for each entry to HETTRN, which occurs for each row of each sector, plus cooler. The run continues using the 10th value estimated.

17. EITHER INLET ØR ØUTLET DELTA T IS NEG., INLET = n_1
ØUTLET = n_2 SECTØR = n_3 ROW = n_4 n_5

From HETTRN, this message indicates that temperature of coolant inlet, outlet, or both are higher than the steam temperature in the indicated sector and row. The log mean

delta T is arbitrarily set to 0.001 and calculations proceed. This message is printed only once per iteration. If $n_5 = 1$, condition first occurred in the condenser section; if $n_5 = 2$, the condition first occurred in the cooler.

18. RUN TERMINATING IN CØNDENSER. SHMK = n_1 DELFLM = n_2 SECTØR = n_3 RØW = n_4

From HETTRN, this message indicates that the temperature drop across the outer condensate film has become too small to permit satisfactory calculation of the coefficients. Calculation of the rows in the affected sector is stopped, but run continues with next sector.

19. RUN TERMINATING IN CØØLER. SHNK = n_1 DELFLM = n_2 RØW = n_3

From HETTRN, same as message 18 except for cooler. If condition occurs on single pass calculation, or final pass of iteration case, only the detail will be printed on output.

20. **NEITHER FØRCE CØNSTRAINTS NØR MØLECULAR VØLUMES EXIST AS ARGUMENTS. CALCULATIØNS CANNØT PRØCEED.**

From DFSVTY, this indicates a probable compiling error. An unpredictable value for diffusivity will be returned.

21. SUBRØUTINE TSATFN FINDS CØMPLEX RØØTS

From TSATFN, this indicates the solution of the equation for temperature of steam is imaginary. The case immediately terminates and the entire series is rejected. (Will not go to next case.)

II. General Messages

1. Once for each case that successfully runs, the following message is printed from MAIN as the last message prior to the standard output.

CØØLER EXIT STEAM FRACTION n_1 ACTUAL TUBES IN CØNDENSER n_2 ACTUAL TUBES IN CØØLER n_3

n_1 = exit steam as a function of inlet steam
n_2 = number of tubes in condenser
n_3 = number of tubes in the cooler

2. In cases that iterate to converge to a given exit steam fraction, one of the two following messages is printed from ADJUST for each iteration.

(a) n_1 ALTØLD = n_2 XTFR1 = n_3 ALST = n_4

or

(b) n_1 WSIØLD = n_5 XTFR1 = n_3 WSI = n_6.

ALTØLD is previous value of tube length
WSIØLD is previous value of inlet steam
ALST is new value of tube length
WSI is new value of inlet steam.
XTFR1 is exit steam fraction
n_1 is the iteration number.

3. In cases converging to a specific exit fraction, the following message is printed on reaching convergence from ADJUST.

CØNVERGENCE CRITERIA MET FØR EXIT STEAM.

4. If the temperature difference between steam and coolant at the inlet is within 10 percent of the difference between steam and coolant at the outlet, the following message is printed from HETTRN, and the arithmetic mean is used instead of the LMTD.

INLET/ØUTLET DELTA T RATIØ IS NEAR 1.0,
STSAT = n_1 STBI = n_2 TB2 = n_3 SECTØR = n_4
RØW = n_5 n_6

This message is printed once only for each iteration.

n_6 is an indicator to specify whether message is generated in the condenser or cooler.

$n_6 = 1$ from condenser
$n_6 = 2$ from cooler.

5. One or both of the following messages may be printed from HETTRN once only in an iteration, i.e., at the first occasion that the Reynolds number on the shell side drops below 100 in the condenser and in the cooler.

(a) REYNØLDS NUMBER IN CØNDENSER ØN SHELL SIDE HAS FALLEN BELØW 100, RENØ = l_1 SECTØR = n_2 RØW = n_3

(b) REYNOLDS NUMBER IN CØØLER ØN SHELL SIDE HAS FALLEN BELØW 100, RENØ = n_1 SECTØR = n_2 RØW = n_3.

NOMENCLATURE

MAIN

A	Increment by which inlet steam is distributed through the sectors for an initial estimate.
AENT	Total area open to steam flow for a full 12-sector bundle, ft^2.
AI	Internal surface area of a tube, ft^2.
ALST	Length of tubes, ft.
ALTB	Intermediate value used calculating tube flooding factors.
AL01-9,41-3	Intermediate calculations for finding tube flooding factors.
AMLSEX	Total mols of steam leaving condenser bundle, i.e., feed steam to cooler in mols.
AMØLNC	Total mols of noncondensable gases entering condenser.
AMØLSS	Total mols of steam entering condenser.
AMØLST	Sum of mols of steam and noncondensables entering condenser.
AMWNC	Molecular weight of noncondensable gas.
ANF	Number of tubes above a given tube from which condensate drains to cause flooding.
ANT	Total number of tubes in condenser; adjusted for sector model.
AØ	External surface area of a tube, ft^2.
AØTFLW	Area open to flow in a given row of tubes, one sector, ft^2.
ASS	Error condition flag.
AW	Log mean tube area, ft^2
AXI	Cross-sectional area of tube open to coolant flow, ft^2.
BAFFLE	Input flag to indicate presence or absence of baffles in the bundle.
BNDFAR	Total area at outer radius of tube bundle, ft^2.
BNDIAM	Overall tube bundle diameter, ft.
BNDRAD	Radius of tube bundle, ft.

NOMENCLATURE
Contd.

CBI	Concentration of coolant
CPB	Specific heat of coolant
CPRT, CPR1, CPR2	Intermediate values used in calculating number of tubes per row in the bundle
DELPC	Pressure drop across cooler, psi
DELPVE	Average pressure drop across condenser bundle, psi
DELP12	Pressure loss in steam entering bundle, psi
DELP23	Pressure drop due to increase of velocity in steam entering bundle, psi
EXFR1	Steam exiting from cooler as a percent of inlet steam
EXITFR	Target value of steam exiting from cooler, percent of inlet steam; input item
GB	Coolant flow in tubes, lb/ft^2-sec
GMFCTR	Constant factor needed in calculation of tubes per row in a sector
G2	Product of specific volume of steam mixture with constants in pressure loss calculation
HFG	Latent heat of vaporization of inlet steam, Btu/lb
HNØC	Number of tubes per row in cooler
HNØCSV	Register to save original value of HNØC
HTCLR	Height of cooler, ft
IBT	Flag to control number of times a message is printed
IDT	Same IBT
IHNØ	Number of rows of tubes in each sector
IHNØC	Number of tubes per row in cooler
ILNG	Counter for number of loops needed for adjustment of tube length
INSTM	Flag to control program flow to adjustment of inlet steam of tube length
IRENØ	Flag to control number of times a message is printed

NOMENCLATURE
Contd.

IRENØC	Same as IRENØ
ISEC	Number of sectors in model of tube bundle
IVNØSV	Register to save original number of rows of tubes in cooler
IWS	Counter for number of loops needed to adjust inlet steam
JRC	Flag to control number of times a message is printed
JGAS	Indicator for type of noncondensable assumed
NERR	Error condition indicator
NØRØWS	Number of rows of tubes in a sector
NRØWSV	Retained value of original estimate of NØRØWS
NRWS	Input value of number of rows in a sector of the condenser
NTMS	Counter to give the number of loops needed to calculate the number of rows and tubes per row in a sector
PATHAR	Cross-sectional area in tube bundle open to flow of steam for one tube, ft^2
PMIX	Pressure of steam-noncondensable mixture, psia
PMIX1	Pressure of entering steam - NC mixture, psia
PMXEXT	Pressure of exit steam - NC mixture as it leaves the condenser bundle, psia
PSATEX	Saturated steam pressure at exit of condenser bundle, psia
PSAT1	Saturated steam pressure of entering steam to condenser, psia
PROCCLR	Percent of tubes in cooler
RADFLG	Input factor used to modify bundle radius
RADINS	Radius of inside void of bundle, ft
RADIUS	Radius of arc drawn through a row of tubes in a sector, ft
RADSQ	Bundle radius squared, ft^2
SDD	Ratio of center to center tube spacing to tube diameter in condenser
SDDMIN	Same as SDD only in cooler
SDI	Tube inside diameter, ft
SDØ	Tube outside diameter, ft

NOMENCLATURE
Contd.

SDW	Log mean tube diameter ft
SECFLG	Sector flag, indicating number of sectors in the tube bundle, half the sectors for a symmetrical bundle
SG	Gravitational conversion factor
SHWINV	Inverse tube wall heat transfer coefficient, hr-ft^2-°F/Btu
SKW	Thermal conductivity of tube material, Btu/hr-ft^2-°F/ft
SPFCTR	Vertical spacing between two tubes, one immediately above the other, i.e., twice the vertical spacing between rows of tubes
STBI	Coolant temperature at tube inlet, °F
STB2ES	Initial estimate of coolant temperature at tube exit, °F
STSAEX	Saturated steam temperature at condenser bundle exit, °F
STSAT1	Saturated steam temperature at condenser bundle inlet, °F
SUMTUB	Register to sum tubes as number of rows of tubes in bundle is determined
SVMIX1	Specific volume of entering steam - NC mixture, cu ft/lb
SVNC1	Specific volume of noncondensable gas at bundle entrance, cu ft/lb
TBNPR	Number of tubes in a row in the condenser
TNØ	Number of tubes in the condenser bundle
TNØC	Number of tubes in the cooler section
TSATEX	Saturated steam absolute temperature at exit of condenser bundle, °K
TSAT1	Saturated steam absolute temperature at entrance to condenser bundle, °K
VEL	Steam plus NC velocity in condenser bundle, F/S
VELEXT	Steam plus NC velocity leaving condenser bundle, F/S
VEL1	Steam plus NC velocity immediately before entering first row of tubes in condenser, F/S
VEL2	Steam plus NC velocity in the first row of tubes, F/S
VG1	Specific volume of the steam at the entrance of the condenser, cu ft/lb
VNØC	Number of vertical rows of tubes
VNØCSV	Register to save original value of VNØC
VPSHI	Coolant temperature at inlet to tube, °F

NOMENCLATURE
Contd.

WB	Coolant flow per tube, lb/hr
WBI	Total coolant flow, lb/hr
WGAS	Noncondensable flow to a sector, lb/hr
WNCC	Noncondensable flow to cooler, lb/hr
WNCI	Noncondensable flow to condenser, lb/hr
WS	Steam flow to a row of tubes in the condenser, lb/hr
WSC	Steam flow to a row of tubes in the cooler, lb/hr
WSEXIT	Steam flow leaving condenser, lb/hr
WSI	Total steam feed to condenser, lb/hr
WSUMX	Sum of exit steam flows from condenser sectors, lb/hr
XTFR1	Steam leaving cooler as fraction of inlet steam to condenser
XW	Wall thickness of tubing, in.

NOMENCLATURE
Contd.

COOLEX

ALMTDC	Log mean temperature difference in cooler, steam to coolant, °F
ALST	Tube length, ft
AMLSCC	Mols of noncondensable gas in cooler
AMLSEX	Mols of steam leaving condenser
AMLSSC	Mols of steam in first row to cooler tube
AMLT	Total mols, steam plus noncondensables entering cooler
AMWNC	Molecular weight of noncondensable gas
ANFC	Number of tubes causing flooding on a given row of tubes
AØ	Outer surface area of a tube in the cooler
ASS	Error condition flag
AXØC	Initial area open to flow in cooler, ft^2
AXØM	Area open to flow based on maximum allowable steam velocity, ft^2
A2DA1	Velocity ratio of steam entering cooler to steam leaving condenser
CUMDPC	Accumulated pressure drop from the condenser bundle inlet to a given row of tubes, in. of water
DELPCT	Pressure loss due to velocity fluctuations going from condenser to cooler, psi
DELPC	Total pressure drop across cooler, psi
DELTPC	Pressure drop across one row of tubes, psi
ENHF	Enhancement factor for pressure drop in steam.
GFLØWC	Flow rate of steam plus noncondensables, $lb/hr\text{-}ft^2$
G2	Product of specific volume of steam mixture with constants in pressure loss calculations
HEFFC	Film heat transfer coefficient due to the presence of a noncondensable gas, $Btu/hr\text{-}ft^2\text{-}°F$
HFG	Latent heat of vaporization of steam, Btu/lb
HNØC	Tubes per row in the cooler
II	Indicator to select proper message in HETTRN
IRØWC	Flag to control flow of program if condensing rate gets excessive

NOMENCLATURE
Contd.

JGAS	Indicator for type of noncondensable is present
JY	Counter for sensible heat correction loop
LJ	Indicator used in various messages, identifies cooler
NRWSC	Number of rows of tubes in the cooler
PAL	Saturated steam pressure, psia
PMIXC	Pressure of steam - NC mixture in cooler, psia
PMIX1	Pressure of steam - NC mixture entering the condenser, psia
PMXEXT	Pressure of steam - NC mixture leaving the condenser, psia
PRCCLR	Percent of tubes in the cooler
PSATC	Saturated steam pressure in row of tubes in cooler, psia
QØAC	Heat flux in cooler tube bundle, Btu/hr-ft^2
RØUTC	External film heat transfer coefficient, Btu/hr-ft^2-°F
RCC	Ratio noncondensables to total flow in a row of tubes in the cooler
SDDMIN	Center to center spacing to tube diameter ratio in cooler
SDØ	Outer diameter of tubes, ft
SG	Gravitational conversion factor, ft-lb/lb-sec^2
SHIC	Internal film heat transfer coefficient, Btu/hr-ft^2-°F
SMTBIC	Sum of product of coolant flow with coolant inlet temperature, lb/°F/hr
SMTB2C	Sum of product of coolant flow with coolant exit temperature, lb-°F/hr
SMWBC	Sum of coolant flow to tube rows, lb/hr
STBI	Coolant temperature at tube inlet, °F
STBIP	Input value of coolant inlet temperature, °F
STFØ	Average outer film temperature on tube, °F
STSATC	Saturated steam temperature in a row of tubes in the cooler, °F
SUMQC	Sum of heat transferred through each row of tubes, Btu/hr
SVGEXT	Specific volume of steam at entrance to the cooler, cu-ft/lb
SVMXEX	Specific volume of steam - NC mixture at entrance to the cooler, cu-ft/lb
SVNCEX	Specific volume of noncondensables at entrance to the cooler, cu-ft/lb

NOMENCLATURE
Contd.

TAL	Saturated steam temperature, °F
TB2	Coolant temperature leaving cooler, °F
TNØC	Total number of tubes in the cooler
TSATC	Saturated steam absolute temperature, °R
TSATEX	Saturated steam absolute temperature at entrance to cooler, °R
TSATMN	Saturated steam absolute temperature at the next row of tubes in case of an excessive condensing rate in a row, °R
UNC	Heat transfer coefficient for a row of tubes in the cooler, Btu/hr-ft^2-°F
VELC	Steam-NC mixture velocity in a row of tubes in the cooler, ft/sec
VELEXT	Velocity of steam-NC mixture between the condenser and cooler sections, ft/sec
VC	Specific volume of steam in the first row of tubes in the cooler, cu-ft/lb
VLCMAX	Maximum allowable velocity of steam-NC mixture in the cooler, ft/sec
VMIX	Specific volume of the steam-NC mixture, cu-ft/lb
VNC	Specific volume of noncondensable gas, cu-ft/lb
VNØC	Number of rows of tubes in the condenser
VNREC	Reynolds Number on vapor side of the cooler for a row of tubes
VPSHC	Friction factor used in pressure drop calculation across a row of cooler tubes
VPSHHC	Coolant temperature at tube outlet, °F
VPSHIC	Coolant temperature tube inlet, °F
WB	Coolant flow per tube, lb/hr
WCNDC	Steam condensed on a row of cooler tubes, lb/hr
WCNDP	Condensate from a row of tubes corrected for sensible heat change, lb/hr
WNCC	Flow of noncondensable gas through cooler, lb/hr
WSC	Steam flow through a row of cooler tubes, lb/hr
WSEXIT	Steam flow leaving condenser, lb/hr

NOMENCLATURE
Contd.

HETTRN

AI	Internal surface area of one tube, ft^2
ALMTD	Log mean temperature difference, °F
AMØLSC	Mols of noncondensable gas present
AMØLSS	Mols of steam present
AMØLT	Sum of AMØLSS and AMØLSC
AMWAV	Molecular weight of mixture
AMWNC	Molecular weight of noncondensable gas
ANF	Tube flooding factor
AØ	External surface area of one tube, ft^2
ASS	Error condition flag, DELFLM is too low or SHMK is too high
AVIS	Viscosity of steam-NC mixture, lb/ft-sec
AXØ	Area of tube bank open to flow of steam per tube, ft^2
BB	Coolant flow in a tube, $lb/hr\text{-}ft^2$
BMU	Coolant viscosity, lb/ft-hr
BNF	Tube flooding factor
BONE	Coefficient of first degree term in quadratic equation overall heat transfer equation
CBI	Concentration of coolant stream
CJ	Factor needed in solution of equation for heat transfer coefficient
CØLBJ	Colburn "J" factor, function of Reynolds number in steam
CØNE	Constant term in quadratic equation for overall heat transfer coefficient
DELFLM	Temperature drop across outer liquid film, initial estimate, °F
DELTAU	Heat duty on heat transfer surface, $Btu/hr\text{-}ft^2$
DENØM	Intermediate factor in calculation of gas film heat transfer coefficient
DG	Diffusivity, cm^2/sec
DGFLM	Calculated temperature drop across gas film, °F
DLFLM	Calculated temperature drop across outer liquid film, °F

NOMENCLATURE
Contd.

DLGFLM	Initial estimate of DGFLM, °F
DTDP	Inverse of derivative of pressure with respect to temperature, $\Delta T/\Delta P$
ENHI	Enhancement factor for internal film coefficient
ENHØ	Enhancement factor for external film coefficient
E2OK	Force constant for noncondensable for use in DFSVTY
FDAVE	Proportionality factor representing degree of bypassing of flooding condensate
FDAVM	Intermediate result in determination of flooding effect
FDAVN	Same as FDAVM
FØUL	Fouling factor
GB	Coolant flow in tubes, lb/ft^2-sec
GMAX	Steam-NC flow, lb/ft^2-hr
HEFF	Noncondensable film heat transfer coefficient, Btu/hr-ft^2-°F
HIMCØ	Temperature difference from steam to outlet coolant, °F
HØMCI	Temperature difference from steam to inlet coolant, °F
IBT	Flag to control printing of an error message
IDT	Flag to control printing of an error message
II	Indicator to identify location of computation in condenser or cooler
IRENØ	Flag to control printing of a message
IRENØC	Flag to control printing of a message
JGAS	Indicator of type of noncondensable present
JRC	Flag to control printing of a message
LJ	Indicator for sector of computation
PATM	Saturated Steam pressure in atmosphere
PGB	Product of saturated steam pressure with ratio of noncondensables to steam
PSAT	Saturate steam pressure, psia
RC	Ratio of noncondensables to total vapor flow
RFACT	Sum of thermal resistances, less that due to a gas film, 1/Btu/hr-ft^2-°F

NOMENCLATURE
Contd.

RIN	Resistance to heat transfer due to the internal liquid film in the tubes
RMWNC	Noncondensable weighting factor in determination of steam-NC mixture viscosity
RMWSC	Steam weighting factor in determination of steam-NC mixture viscosity
RØDT	Ratio of inlet temperature difference between steam and coolant to the outlet difference
RØUT	External heat transfer film coefficient, initially calculated as a resistance, Btu/hr-ft^2-°F
SDI	Internal tube diameter, ft
SDØ	Outside tube diameter, ft
SHBI	Specific heat of coolant, But/lb-°F
SHI	Internal film heat transfer coefficient, Btu/hr-ft^2-°F
SHMK	External liquid film heat transfer coefficient, Btu/hr-ft^2-°F
SHNF	SHMK adjusted for flooding by condensate
SHWINV	Inverse of tube wall heat transfer coefficient, 1/Btu/hr-ft-°F
SKB	Thermal conductivity of coolant, Btu/hr-ft^2-°F/ft
SKBØ	Thermal conductivity of liquid film on outside of tube, Btu/hr-ft^2-°F/ft
STBAVE	Average coolant temperature, °F
STBI	Inlet coolant temperature, °F
STCØ	Temperature at the surface of the outer liquid film, °F
STFØ	Average temperature of outer liquid film, °F
STWØ	Tube outer wall temperature, °F
STSAT	Saturated steam temperature, °F
TB2	Outlet coolant temperature, °F
TDIF	Temperature difference between saturated steam and average coolant, °F
TSAT	Saturated steam absolute temperature, °F
TSATK	Saturated steam absolute temperature, °K
UEST	Estimated overall heat transfer coefficient, Btu/hr-ft^2-°F
UESTSV	Retained value of estimated overall heat transfer coefficient
UTEST	Recalculated value of overall heat transfer coefficient, Btu/hr-ft^2-°F

NOMENCLATURE
Contd.

VNF	Overall heat transfer coefficient, Btu/hr-ft^2-°F
VPSHH	Outlet coolant temperature, °F
WB	Coolant flow per tube, lb/hr
WNC	Noncondensable flow to a sector, lb/hr
WNCI	Total flow of noncondensables to the condenser, lb/hr
WS	Steam flow to the row of tubes being calculated, lb/hr
XHEFF	Noncondensable film heat transfer coefficient, Btu/hr-ft^2-°F
XNPRB	Prandtl number for coolant
XNREB	Reynolds number for coolant
XNSCH	Schmidt number
XNU	Nusselt number

NOMENCLATURE
Contd.

INPUT

ALST	Length of condenser tubing, ft
ANT	Total number of tubes in bundle
ANTP	Retained value of ANT
BAFFLE	Flag to control program flow depending on the presence of baffles
CBI	Concentration of coolant
ENHF	Enhancement factor for friction factor in steam pressure drop calculations
ENHI	Enhancement factor for inside tube film coefficient
ENHØ	Enhancement factor for outside film coefficient
EXITFR	Target value for percentage of inlet steam to be vented
FØUL	Tube fouling factor
GAS	Type of noncondensable present
GASA	Variable to aid in selection of noncondensable flag
GASC	Same as GASA
GASM	Same as GASA
HFCDFL	Flag to select symmetrical or non-symmetrical bundle
IDENT	Identification and comments for a case
IFLØAT	Flag to specify format used in printing of detailed output
IHNØ	Number of rows of tubes in the condenser
INSTM	Flag to indicate method used to adjust vented steam to EXITFR
IPNCH	Flag to have outlet coolant temperatures punched out on cards for input to a successive stage
ISEC	Number of sectors in the tube bundle (only half for symmetrical case)
ITRAN	Flag to indicate transfer of outlet coolant temperatures from preceding case to inlet temperature for present case
IVNØC	Number of rows of tubes in the cooler
JGAS	Indicator for type of noncondensable

NOMENCLATURE
Contd.

NRWS	Number of rows of tubes in the condenser bundle
NRWSC	Number of rows of tubes in the cooler
NRWSCP	Retained value of NRWSC
NRWSP	Retained value of NRWS
ØD	Outside diameter of tubes, in.
ØUTPUT	Flag to direct printing or omission of detailed output
PRCCLR	Percent of tubes located in the cooler
RADFLG	Factor to aid in controlling void size at the center of the bundle
SDD	Spacing to diameter ratio of condenser model
SDDMIN	Spacing to diameter ratio of cooler tube
SECFLG	Number of sectors in condenser model
SKW	Thermal conductivity of tubing material, Btu/hr-ft^2-°F/ft
STBI	Temperature of coolant at inlet to tube, °F
STBIP	Retained value of STBI
STSAT1	Inlet saturated steam temperature, °F
VELBI	Coolant velocity in tubes, ft/sec
VELBIP	Retained value of VELBI
VPSHI	Temperature of coolant at inlet to tubes in condenser, row-by-row, °F
VPSHIC	Temperature of coolant at inlet of tubes in cooler, row-by-row, °F
WBI	Total coolant flow to tube bundle, lb/hr
WNCI	Total noncondensables to the condenser, lb/hr
WSI	Total steam flow to the condenser, lb/hr
XW	Wall thickness of tube, in.

NOMENCLATURE
Contd.

ØUTP1

ADTCLR	Back calculated log mean temperature difference for cooler only, °F
ADTCND	Back calculated log mean temperature difference for condenser only, °F
ADTØA	Back calculated log mean temperature difference for overall condenser, °F
ALST	Length of tubes in bundle, ft
ANT	Total number of tubes in bundle
AØ	Outside area of a tube, ft^2
ARCØND	Tube surface area of condenser section, ft^2
ARCØØL	Tube surface area of cooler section, ft^2
ARTØT	Total tube surface area, ft^2
AVTBI	Average inlet coolant temperature for condenser sections, °F
AVTBIC	Average inlet coolant temperature for cooler section, °F
AVTBIT	Average inlet coolant temperature for full bundle, °F
AVTB2	Average outlet coolant temperature for condenser sections, °F
AVTB2C	Average outlet coolant temperature for cooler section, °F
AVTB2T	Average outlet coolant temperature for full bundle, °F
BNDIAM	Overall bundle diameter, ft
CBI	Concentration of coolant
CUMDP	Accumulated pressure drop from the inlet to a given row of tubes, in. of water
CUMDPC	Accumulated pressure drop from the condenser bundle inlet to a given row of tubes, in. of water
DELPC	Total pressure drop across the cooler, psi
DELPØA	Total pressure drop across condenser and cooler, psi
DELPVE	Average pressure drop across condenser alone, psi
DLTØT2	Log mean temperature difference calculated from coolant temperature average and inlet steam temperature, °F

NOMENCLATURE
Contd.

DTCND2	Log mean temperature difference calculated from condenser coolant temperature averages and inlet steam, °F
DTCØL2	Log mean temperature difference calculated using cooler coolant average temperature and cooler inlet steam temperature, °F
EXNCFR	Noncondensable vent rate as a percent of exit flow
EXSTFR	Steam vent rate as a percent of inlet steam flow
GFLØW	Mass flow rate of steam-NC mixture in condenser section, lb/hr-ft^2
GFLØWC	Mass flow rate of steam-NC mixture in cooler, lb/hr-ft^2
HBNDC	Height of cooler section, ft
HEFF	Gas film heat transfer coefficient in condenser section, Btu/hr-ft^2-°F
HEFFC	Gas film heat transfer coefficient in cooler section, Btu/hr-ft^2-°F
HNØ	Number of rows of tubes in a sector of the condenser
IDENT	Identification and comments for a case
IFLØAT	Flag to specify format used in printing of detailed output
IHNØ	Number of rows of tubes in a sector of the condenser
IPNCH	Flag to have outlet coolant temperatures punched out on cards for input to successive stages
ISEC	Number of sectors in the condenser model
IVNØC	Number of rows of tubes in the cooler
NERR	Error condition indicator
ØUTPUT	Control flag to direct or omit printing of detailed output
PMIX	Pressure of steam-NC mixture in the condenser for a given row and sector, psia
PMIXC	Pressure of steam-NC mixture in the cooler in a given row, psia
PMIX1	Pressure of steam-NC mixture at entrance of condenser, psia
PMXEXT	Pressure of steam-NC mixture at exit from condenser section, psia
PRCCLR	Percent of tubes in the cooler

NOMENCLATURE
Contd.

QØA	Heat flux across tube wall in condenser section, Btu/hr-ft^2
QØAC	Heat flux across the tube wall in cooler section, Btu/hr-ft^2
QTCØND	Condenser section total heat duty, Btu/hr
QTCØØL	Cooler section total heat duty, Btu/hr
QTØTAL	Sum of QTCØND and QTCØØL
RADINS	Radius of void at center of condenser bundle, ft
RC	Ratio of noncondensable gas to total flow in a row of tubes in the condenser section
RCC	Ratio of noncondensable gas to total flow in a row of tubes in the cooler
RØUT	External heat transfer film coefficient, Btu/hr-ft^2-°F
RØUTC	Same as RØUT for cooler
SDD	Spacing-to-diameter ratio of condenser tubes
SDDMIN	Spacing-to-diameter ratio of cooler tubes
SDØ	Tube diameter, ft
SECFLG	Number of sectors in condenser model
SHI	Internal film coefficient in condenser tubes, Btu/hr-ft^2-°F
SHIC	Internal film coefficient in cooler tubes, Btu/hr-ft^2-°F
SHN	External film coefficient of condenser tubes, Btu/hr-ft^2-°F
SHNFC	External film coefficient of cooler tubes, Btu/hr-ft^2-°F
SMTBI	Sum of product of condenser coolant inlet temperature with coolant flow, lb-°F/hr
SMTBIC	Sum of product of cooler coolant inlet temperature with coolant flow, lb-°F/hr
SMTB2	Sum of products of condenser coolant flow with coolant exit temperature, lb-°F/hr
SMTB2C	Sum of products of cooler coolant flow with coolant exit temperature, lb-°F/hr
SMWB	Row-by-row summation of coolant flow in condenser section, lb/hr
SMWBC	Same as SMWB but for cooler, lb/hr
STSAEX	Saturated steam temperature at condenser section exit, °F
STSATC	Saturated steam temperature in cooler rows, °F
STSAT	Saturated steam temperature in condenser rows, °F
STSAT1	Saturated steam temperature of inlet steam, °F

NOMENCLATURE
Contd.

SUMQ	Summation of heat duty on condenser tubes, by rows, Btu/hr
SUMQC	Summation of heat duty on cooler tubes, by rows, Btu/hr
TBNPR	Number of tubes in a row of tubes in a sector
TDRØP1	Temperature drop across the condenser bundle, °F
TDRØP2	Temperature drop across the cooler, °F
TDRØP3	Overall temperature drop, °F
THØFR	Percent of tubes in the condenser sections
TNØ	Number of tubes in the condenser
TNØC	Number of tubes in the cooler
UAVGW	Average overall heat transfer coefficient for entire bundle, Btu/hr-ft^2-°F
UBARW	Average overall heat transfer coefficient for the condenser sections, Btu/hr-ft^2-°F
UBARWC	Average overall heat transfer coefficient for the cooler, Btu/hr-ft^2-°F
UN	Overall heat transfer coefficient for a row of tubes in a condenser sector, Btu/hr-ft^2-°F
UNC	Overall heat transfer coefficient for a row of tubes in the cooler, Btu/hr-ft^2-°F
UPAVG	Back calculated overall heat transfer coefficient using inlet steam temperature, Btu/hr-ft^2-°F
UPCØND	Back calculated overall heat transfer coefficient for condenser section using inlet steam
UPCØØL	Back calculated overall heat transfer coefficient for cooler using cooler entrance steam temperature, Btu/hr-ft^2-°F
VEL	Steam-NC velocity in rows of tubes in the condenser, F/S
VELC	Steam-NC velocity in rows of tubes in the cooler, F/S
VEL2	Steam-NC velocity in the first row of tubes in the condenser section, F/S
VEL3	Steam-NC velocity in the last row of tubes in the condenser section, F/S
VNØC	Number of rows of tubes in the cooler
VNRE	Reynolds number of steam-NC mixture in the condenser
VNREC	Reynolds number of steam-NC mixture in the cooler

NOMENCLATURE
Contd.

VØIDID	Diameter of void at center of condenser bundle, ft
VPSH	Friction factor for pressure drop calculation in condenser
VPSHC	Friction factor for pressure drop calculation in cooler
VPSHH	Outlet coolant temperature of condenser rows, °F
VPSHHC	Outlet coolant temperature, °F
VPSHI	Inlet coolant temperature of condenser rows, °F
VPSHIC	Inlet coolant temperature of cooler, °F
WBI	Total coolant flow, lb/hr
WBNDC	Width of cooler section, ft
WCNDCT	Total condensate from cooler, lb/hr
WCNDT	Total condensate from condenser sections, lb/hr
WNCI	Inlet flow of noncondensables, lb/hr
WS	Flow of steam to a row of tubes in a condenser section, lb/hr
WSC	Flow of steam to a row of tubes in the cooler, lb/hr
WSEXIT	Steam flow leaving condenser sections, lb/hr
WSI	Total steam to condenser, lb/hr

NOMENCLATURE
Contd.

SECALC

AFAC	Differential flow of steam to sector in pressure balancing loop
ALMTD	Log mean temperature difference from steam to coolant, °F
AMØLNC	Mols of noncondensable gas to the condenser
AMØLS	Mols of steam to a row of tubes in a sector
AMØLSC	Mols of noncondensable gas to a sector
AMØLSS	Mols of steam to condenser
AMØLST	Total mols of steam and NC to condenser
AMWNC	Molecular weight of noncondensable gas
ANF	Tubes above a given tube row creating condensate contributing to flooding
AØ	Outer surface area of a tube, ft^2
AØTFLW	Area open to steam flow in a row of tubes, ft^2
ASS	Error condition flag
AXØ	Area open to flow in a row of tubes, ft^2
BAFFLE	Flag to direct program flow to proper flooding factor determination depending on presence or absence of baffles
C	Proportionality factor used to adjust flow to sectors in order to balance pressure drops
CBI	Concentration of coolant
CHGSC	Adjusting factor in pressure drop adjustment loop
CØNSM	Sum of C, used to correct average pressure drop across sectors
CUMDP	Accumulated pressure drop from the inlet to a given row of tubes, in. of water
DELP	Pressure drop across a sector, psi
DELPTP	Pressure drop across a row of tubes, psi
DELPVE	Average pressure drop across the sectors, psi
DELP12	Entrance pressure loss in condenser, psi
DELP23	Pressure loss at bundle face due to velocity change, psi
DHØLD	Interim register to hold value of deviation of pressure drop from average to test for a maximum

NOMENCLATURE
Contd.

DLPVES	Register to retain average pressure drop across a sector pending correction
DMAX	Maximum deviation of pressure drop in a sector from the average
ENHF	Enhancement factor for pressure drop friction factor on stream side of tube
FAC	Change in steam flow to a sector pending fine tune readjustment
GFLØW	Mass flow rate of mixture in tube bundle, $lb/hr\text{-}ft^2$
HEFF	Film heat transfer coefficient due to the presence of a noncondensable gas, $Btu/hr\text{-}ft^2\text{-}^\circ F$
HFG	Latent heat of vaporization of steam, Btu/lb
IDENT	Identification and comment input
IHNØ	Number of rows of tubes in a sector
II	Indicator to direct proper message selection in HETTRN as needed
IJX	Counter in loop to correct for low steam temperature
IPLØØP	Loop counter for pressure drop correction
IROW	Flag to control program flow if condensing rate becomes excessive.
ISEC	Number of sectors in assumed model
IST	Flag to control number of times a message is printed
JGAS	Flag to indicate type of noncondensable present
L	Sector currently being calculated for use in messages from HETTRN
NERR	Error condition flag
PMIX	Pressure of steam-NC mixture, psia
PMIX1	Pressure of entering steam-NC mixture, psia
PMXEXT	Pressure of steam-NC mixture as it leaves the condenser, prior to cooler, psia
PSAT	Saturated steam pressure, psia
QØA	Heat flux across tube wall, $Btu/hr\text{-}ft^2$

NOMENCLATURE
Contd.

RC	Ratio of noncondensable gas to total flow in a row of tubes
RØUT	External heat transfer film coefficient, Btu/hr-ft^2-°F
SDØ	Outer diameter of tubes, ft
SECFLG	Number of sectors in assumed condenser model
SHI	Internal film coefficient in condenser tubes, Btu/hr-ft^2-°F
SHN	External film coefficient of condenser tubes, Btu/hr-ft^2-°F
SMTBI	Sum of product of coolant inlet temperature with coolant flow, row by row, lb-°F/hr
SMTB2	Sum of product of coolant outlet temperature with coolant flow, row by row, lb-°F/hr
SMWB	Sum of coolant flow, row by row, lb/hr
SSAVE	Average steam flow to a sector, lb/hr
STBI	Inlet temperature of coolant, °F
STBIP	Input value of inlet temperature of coolant, °F
STB2ES	Initial estimate of outlet temperature of coolant, °F
STFØ	Average temperature of outer film on tubes, °F
STSAT	Saturated steam temperature, °F
SUMQ	Sum of heat duty on the rows of tubes, Btu/hr
SVMIX1	Specific volume of steam-NC mixture entering condenser, cu-ft/lb
SWTCH	Holing register for steam to the sectors when balancing pressure drop in a baffled model
TAL	Saturated steam temperature, °F
TBNPR	Number of tubes in a given row in a sector
TB2	Coolant outlet temperature, °F
TNØ	Total number of tubes in the condenser
TNØC	Total number of tubes in the cooler
TNØFR	Percent of total tubes in the cooler
TSAT	Absolute saturated steam temperature, °R
UN	Overall heat transfer coefficient for a row of tubes in a sector, Btu/hr-ft^2-°F
VEL	Steam-NC mixture velocity in row of tubes, ft/sec
VG	Specific volume of steam, cu-ft/lb

NOMENCLATURE
Contd.

VMIX	Specific volume of steam-NC mixture, cu-ft/lb
VNC	Specific volume of noncondensable gas, cu-ft/lb
VNRE	Reynolds number on vapor side of condenser for a given row and sector
VPSH	Friction factor used in pressure drop calculation across a row of tubes in the condenser
VPSHH	Coolant temperature at condenser tube outlet, °F
VPSHI	Coolant temperature at condenser tube inlet, °F
WB	Coolant flow to one tube in condenser, lb/hr
WCND	Condensate from one row of tubes in a sector, lb/hr
WCNDP	Condensate from one row of tubes corrected for sensible heat change, lb/hr
WGAS	Flow of noncondensable gas to a sector, lb/hr
WNC	Same as WGAS
WNCI	Total noncondensable gas in condenser feed, lb/hr
WNCFR	Fraction of total noncondensables in inlet stream
WP	Initial adjusted total flow to a sector in loop to correct flow for pressure drop, lb/hr
WPT	Summation of WP
WS	Steam flow to a row of tubes in a sector, lb/hr
WSAVE	Average total flow to a sector, lb/hr
WSI	Total steam flow to condenser, lb/hr
WSP	Adjusted flow of steam to the sectors, lb/hr
WSPT	Summation of WSP, lb/hr

APPENDIX A

Heat Transfer and Pressure Drop Correlations Used in Subroutine HETTRN

Correlations upon which subroutine HETTRN is based are as follows:

1. Condensate Film Coefficient:

The mean condensate film coefficient for a vertical column of n horizontal tubes in filmwise condensation is calculated by multiplying the single tube coefficient h_1 by the condensate rain factor F(n).

$$\bar{h}_n = h_1 F_n \tag{1}$$

The single tube condensate film coefficient is given by the Nusselt equation:

$$h_1 = 0.725 \left(\frac{k^3 \rho_f \lambda}{\mu_f D_o \Delta T}\right) \tag{2}$$

The condensate rain factor, for the mean of n tubes in a vertical column, is

$$F(n) = 0.6 F_d + (1 - 0.5647 F_d) n^{-0.20} \tag{3}$$

where F_d is an input item with a value between 0 and 1 related to the tube spacing and orientation; reference (1) recommends these tentative values:

Tube Lattice	F_d
In line	0
Staggered, spacing/diameter >1.40	0
spacing/diameter = 1.33	1.5
spacing/diameter <1.25	1.0

For one tube in the nth row from the top the condensate film coefficient is:

$$h_n = [n F(n) - (n-1) F (n-1)] h_1 \tag{4}$$

---

[1] D. M. Eissenberg and H. M. Noritake, Computer Model and Correlations for Prediction of Horizontal Tube Condenser Performance in Seawater Distillation Plants, USAEC Report ORNL-TM-2972, October 1970.

2. Effective Heat Transfer Coefficient Due to Noncondensable Gas:

The temperature drop across the noncondensable gas film defines a gas film heat transfer coefficient

$$h_{eff} = U_g \, \Delta T_m / \Delta T_g \tag{5}$$

which in turn relates the overall coefficients U_g, with the presence of gas, and U with no gas, by the equation

$$1/U_g = 1/U + 1/h_{eff} \tag{6}$$

The gas film coefficient was expressed by Colburn as an equivalent mass transfer coefficient for turbulent diffusion of the vapor through a stagnant vapor-gas mixture

$$k_G = \frac{h_{eff}}{\lambda} \left(\frac{\Delta T_f}{\Delta P_f}\right) \tag{7}$$

Eissenberg and Bogue[2] have defined a dimensionless mass transfer factor

$$j_M = \frac{k_G \, P_{gc}}{G_v} (Sc)^{2/3} \tag{8}$$

and shown that experimentally it correlated well in their experiments with

$$j_M = e^{.53883 - .544 \ln Re} \tag{9}$$

The partial pressure of the noncondensables at the condensing surface differs from that in the gas stream by

$$P_{gc} - P_{gb} = \Delta T_f \left(\frac{\partial p}{\partial T}\right) \tag{10}$$

When the variables P_{gc}, k_G, h_{eff} and ΔT_f are eliminated from Eq. (5) - (8) and (10), there results

---

[2] D. M. Eissenberg and D. Bogue, Tests of an Enhanced Horizontal Tube Condenser under Conditions of Horizontal Steam Cross Flow," Heat Transfer 1970 Conference Proceedings (Elsevier Publishing Co.), Vol. I Paper HE2.1.

$$U_g^2 - U_g \left(\frac{j_m G_v (Sc)^{-2/3} \lambda}{\Delta T_m} + \frac{P_{gb} U}{\Delta T_m} \left(\frac{\partial T}{\partial p}\right) + U \right) + \frac{j_m G_v Sc^{-2/3} U}{\Delta T_m} = 0 \tag{11}$$

or

$$U_g^2 - b\, U_g + c = 0 \tag{11a}$$

relating the heat transfer coefficients with and without presence of gas.

3. Convective Film Coefficient (h_c):

$$\frac{h_c D_i}{k} = E_i \times .023 \times \left(\frac{D_i V \rho}{\mu}\right)^{0.8} \times \left(\frac{C_p \mu}{k}\right)_b^{0.33} \tag{12}$$

where E_i is an input item giving the convective film enhancement.

4. Shellside Total Pressure Drop:

$$f = 0.102 + \frac{52.2}{N_{Re}} \tag{13}$$

where

$$f = \frac{\Delta P\, g_c\, \rho}{2\, G^2\, N} \tag{14}$$

The origins and/or confirming experimental data for these correlating equations are described in Reference (1).

In addition the program requires as an input item a (constant) value of a fouling resistance to apply to each tube in computing its overall heat transfer coefficient.

NOMENCLATURE FOR APPENDIX

b	coefficient in Equation (11a)
c	coefficient in Equation (11a)
D_i	inside diameter of tube
D_o	outside diameter of tube
E_i	enhancement factor, Equation (12)
f	friction factor, Equation (14)
F_d	tube spacing parameter
$F(n)$	condensate rain factor
g_c	conversion constant
G	steam mass velocity
h_c	convective heat transfer coefficient
h_{eff}	noncondensable gas film coefficient
$\bar{h}_n$	mean condensate film coefficient for n tubes
h_1	condensate film coefficient for top tube
h_n	condensate film coefficient for tube in nth row
J_M	modified mass transfer factor, Equations (8,9)
k	tubeside liquid thermal conductivity
k_G	mass transfer coefficient
L	length of tube
n	number of tubes in vertical column
N	number of tubes in steam flow path to vent
N_{Re}	Reynolds number
S	tube spacing (center to center)
P_{gb}	partial pressure of noncondensable gas in flowing stream at plane of test tubes
P_{gc}	partial pressure of noncondensable gas at condensate film surface
ΔP	pressure drop in tube
ΔP_f	partial pressure drop of steam across noncondensable gas film
Sc	Schmidt number
ΔT	temperature difference across condensate film
ΔT_f	temperature across noncondensable film
ΔT_m	log mean temperature difference (bulk liquid to bulk steam)

NOMENCLATURE FOR APPENDIX
Contd.

V	tubeside liquid velocity
λ	latent heat
μ	viscosity
ρ	density

APPENDIX B. FORTRAN LISTING

```
CMAIN                                                                   MAIN   0
CCC                                                                     MAIN   5
C                                                                       MAIN  10
C    CIRC99 -- 360/OS 12/10/68 NO COOLER MODIFICATION                   MAIN  15
C                                                                       MAIN  20
CCC                                                                     MAIN  25
      COMMON/INPT/ ALST ,ANT ,BAFFLE ,HFCDFL, CBI ,EXITFR ,FOUL ,GAS ,  MAIN  30
     , OD , OUTPUT ,PRCCLR ,RADFLG ,SDD ,SDDMIN , SECFLG ,SKW ,STBI ,   MAIN  35
     , STSATI ,VELBI , VSFLG ,WNCI ,WSI ,XW ,VPSHI(100,6), VPSHIC(100) ,MAIN  40
     ,  FDAVE ,ENHI ,ENHO ,ENHF ,WBI ,STBIP,ANTP,VELBIP,ADJF,IDENT(20), MAIN  45
     , INSTM ,IFLOAT ,ITRAN ,IPNCH ,NRWSP ,NRWSCP ,NRWS ,NRWSC          MAIN  50
      COMMON/INTEG/IHNO ,IHNOC ,ILNG ,ISEC , IVNO ,IVNOC ,J ,JGAS ,JRC ,MAIN  55
     ,  IRENO ,IRENOC ,IDT ,IBT                                         MAIN  60
      COMMON AI  ,AMLSEX ,AMOLNC ,AMWNC ,AO , ASS ,AW ,AXI ,BNDIAM ,COOR MAIN  65
     , (3), DELPVE ,GB ,HFG ,HNO ,HNOC , PMIX1 ,PMXEXT ,PSATEX ,RADINS ,MAIN  70
     ,  SDI , SDO ,SF ,SG ,SHWINV ,STBAVE , STB2ES ,STFO ,STSAEX ,TB2 , MAIN  75
     , TNO , TNOC ,TNOFR ,TSATEX ,VELEXT ,VG , VLCMAX ,VNO ,VNOC ,WB ,  MAIN  80
     , WNCC ,WSEXIT ,XNC , SMTBI, SMTB2, SMWB, SUMQ, SMTBIC, SMTB2C,    MAIN  85
     , SMWBC, SUMQC                                                     MAIN  90
      COMMON/DIM6/ C (6),DELP (6),WGAS (6),WP (6) ,WSP(6)               MAIN  95
      COMMON/DIM1/ALMTDC(100), GFLOWC(100),PMIXC (100),PSATC (100),RCC  MAIN 100
     , (100), SHIC (100),SHNFC (100),STSATC(100), UNC (100),VELC (100), MAIN 105
     , VNREC (100),VPSHC (100), VPSHHC(100),WCNDC (100),WSC (100),      MAIN 110
     , HEFFC(100) ,ROUTC(100) ,QOAC(100) , CUMDPC(100)                  MAIN 115
      COMMON/DIM16/ ALMTD (100,6) , ANF (100,6), GFLOW (100,6),PMIX     MAIN 120
     , (100,6), PSAT (100,6), RC (100,6),SHI (100,6), SHN (100,6),STSAT MAIN 125
     , (100,6) ,UN (100,6), VEL (100,6),VNRE (100,6) ,VPSH (100,6),     MAIN 130
     , VPSHH (100,6),WCND (100,6), WS (100,6) , HEFF(100,6) , ROUT(100, MAIN 135
     , 6) ,QOA(100,6) ,CUMDP(100,6),AOTFLW (100), RADIUS (100), TBNPR   MAIN 140
     , (100)                                                            MAIN 145
      DIMENSION X1N(11),YN(11)                                          MAIN 150
      INTEGER GAS(5)                                                    MAIN 155
      SG=32.174                                                         MAIN 160
      VLCMAX=150.0                                                      MAIN 165
      CALL ZERO(VPSHI,2800)                                             MAIN 170
   10 CALL INPUT(&160,&290)                                             MAIN 175
      NERR = 0                                                          MAIN 180
      IHNO = 0                                                          MAIN 185
      ADJF = 6.0 * (2.0 - HFCDFL)                                       MAIN 190
      IF (JGAS.EQ.1) AMWNC = 28.965                                     MAIN 195
      IF (JGAS.EQ.2) AMWNC = 44.                                        MAIN 200
      IF (JGAS.EQ.3) AMWNC = 36.5                                       MAIN 205
      PI = 3.1416                                                       MAIN 210
      SDO=OD/12.0                                                       MAIN 215
C           COMPUTE BUNDLE GEOMETRY                                     MAIN 220
C     CONDENSER SECTION                                                 MAIN 225
      ANT = ANT * ADJF / SECFLG                                         MAIN 230
      TNO=ANT*(1.0-PRCCLR/100.0)                                        MAIN 235
      NOROWS = (TNO*1.1035)**0.5/2.0                                    MAIN 240
      NTMS = 1                                                          MAIN 245
      NROWSV = NOROWS                                                   MAIN 250
      GMFCTR = 2.0*PI/(SDD*SDO*12.0)                                    MAIN 255
      SPFCTR = 1.732*SDD*SDO                                            MAIN 260
      ISEC = SECFLG                                                     MAIN 265
   20 BNDRAD = FLOAT(NOROWS)*SDD*SDO                                    MAIN 270
      BNDRAD = BNDRAD * RADFLG                                          MAIN 275
C  CALC. FOR EACH ROW(I), RADIUS AND  NO. OF TUBES                      MAIN 280
      RADIUS(1)=BNDRAD                                                  MAIN 285
      TBNPR(1)=RADIUS(1)*GMFCTR                                         MAIN 290
      RADSQ = BNDRAD**2                                                 MAIN 295
```

```
   30 CONTINUE                                                          MAIN 300
      SUMTUB = 0.0                                                      MAIN 305
      DO 70 I=1,NOROWS                                                  MAIN 310
         SUMTUB = TBNPR (I) *12.0 + SUMTUB                              MAIN 315
         IHNO = I                                                       MAIN 320
         IF (SUMTUB-TNO) 60,40,40                                       MAIN 325
   40    CONTINUE                                                       MAIN 330
         CPRT = 1. - PRCCLR/100.                                        MAIN 335
         CPR1 = (SUMTUB-TBNPR(I)*12.)/ANT                               MAIN 340
         CPR2 = SUMTUB/ANT                                              MAIN 345
         IF (ABS(CPRT-CPR1).GT.ABS(CPRT-CPR2)) GO TO 50                 MAIN 350
         IHNO = I - 1                                                   MAIN 355
         SUMTUB = SUMTUB - TBNPR (I) * 12.0                             MAIN 360
         RADINS = RADIUS (I - 1) - SDD * SDD / 2.0                      MAIN 365
         GO TO 80                                                       MAIN 370
   50    CONTINUE                                                       MAIN 375
         RADINS = RADIUS (I) - SDD * SDD / 2.0                          MAIN 380
         GO TO 80                                                       MAIN 385
   60    RADIUS (I + 1) = RADIUS (I) - 0.866 * SDD * SDD                MAIN 390
   70    TBNPR(I+1) = GMFCTR * RADIUS(I+1)                              MAIN 395
CCCCC                                                                   MAIN 400
C  AT THIS POINT *DO  70* HAS BEEN SATISFIED & SUMTUB ) TNO.            MAIN 405
C  AN ADDITIONAL ROW WILL BE ADDED IF ROOM REMAINS-IE--RADIUS(IHNO+1),0.MAIN 410
CCCCC                                                                   MAIN 415
      NOROWS = NOROWS + 1                                               MAIN 420
      IF (RADIUS(IHNO+1).GT.0.0) GO TO 30                               MAIN 425
CCCCC                                                                   MAIN 430
C  IF RADIUS(IHNO + 1) ) 0.0, A BIGGER DIAM. BUNDLE IS REQUIRED TO      MAIN 435
C  ACCOMODATE THE REQUIRED NO. OF TUBES.                                MAIN 440
CCCCC                                                                   MAIN 445
      NOROWS = NROWSV + NTMS                                            MAIN 450
      NTMS = NTMS + 1                                                   MAIN 455
      GO TO 20                                                          MAIN 460
   80 CONTINUE                                                          MAIN 465
      TNOC = ( ANT - SUMTUB ) / ADJF * SECFLG                           MAIN 470
      IF (PRCCLR.EQ.0.0) TNOC = 0.0                                     MAIN 475
      TNO = SUMTUB                                                      MAIN 480
C     WRITE(6,9127) TNO, TNOC, SUMTUB                                   MAIN 485
C9127 FORMAT('0', 4X, 3E20.6)                                           MAIN 490
      HNO = FLOAT(IHNO)                                                 MAIN 495
CCCCCC                                                                  MAIN 500
C     IF NO. OF CONDENSER TUBE ROWS(IHNO) .GT. 99, GO TO NEXT CASE      MAIN 505
CCCCCC                                                                  MAIN 510
      IF (IHNO.LT.99) GO TO 90                                          MAIN 515
      WRITE(6,10000) IHNO                                               MAIN 520
      GO TO 10                                                          MAIN 525
   90 IF (NRWS.EQ.0..OR.NRWS.EQ.IHNO) GO TO 100                         MAIN 530
      WRITE(6,10100) NRWS,IHNO                                          MAIN 535
      GO TO 10                                                          MAIN 540
  100 CONTINUE                                                          MAIN 545
C  REVISED EST. OF NO. OF TUBES ABOVE ROW(I) FOR THE 6 SECTOR GEOMETRY  MAIN 550
C     CONCEPT.  ADJUSTED FOR VACANT SPACE(VOID) IN BUNDLE CENTER WITH   MAIN 555
C     OPTION OF BAFFLES AT 2 & 4 O'CLOCK POSITIONS.  5/30/68            MAIN 560
C     NO BAFFLES IF BAFFLE = 0.                                         MAIN 565
C        BAFFLES IF BAFFLE = 1.                                         MAIN 570
      CALL ZERO(ANF,2400)                                               MAIN 575
      DO 130 I=1,IHNO                                                   MAIN 580
         AL01 = 0.96593 * RADIUS(I)                                     MAIN 585
         AL03 = 0.25882 * RADIUS(I)                                     MAIN 590
         AL02 = (RADSQ - AL03**2)**0.5                                  MAIN 595
```

```
      ALTB = C.500 * RADIUS(I)                                          MAIN 600
      AL041 = 0.0                                                       MAIN 605
      IF (RADINS.GT.AL03) AL041 = (RADINS**2-AL03**2)**0.5              MAIN 610
      ANF(I,1) = (AL02 -AL01)/SPFCTR                                    MAIN 615
      AL05 = 0.70711 * RADIUS(I)                                        MAIN 620
      AL06 = (RADSQ - AL05**2)**0.5                                     MAIN 625
      ANF(I,2) = (AL06 - AL05)/SPFCTR                                   MAIN 630
      AL042 = 0.0                                                       MAIN 635
      IF (RADINS.GT.AL05) AL042 = (RADINS**2 - AL05**2)**0.5            MAIN 640
      AL043 = 0.0                                                       MAIN 645
      IF (RADINS.GT.AL01) AL043 = (RADINS**2 - AL01**2)**0.5            MAIN 650
      AL09 = (RADSQ - AL01**2)**0.5                                     MAIN 655
      IF (BAFFLE.EQ.1.0) GO TO 110                                      MAIN 660
      ANF(I,3) = (AL09-AL03)/SPFCTR                                     MAIN 665
      ANF(I,4) = (AL09 + AL03 - 2.*AL043)/SPFCTR                        MAIN 670
      ANF(I,5) = (AL06 + AL05 - 2.*AL042)/SPFCTR                        MAIN 675
      ANF(I,6) = (AL02 + AL01 - 2.*AL041)/SPFCTR                        MAIN 680
      GO TO 120                                                         MAIN 685
  110 CONTINUE                                                          MAIN 690
C  BAFFLED SYSTEM CALCS. (BETWEEN SECTORS 2 & 3 AND 4 & 5.)             MAIN 695
    ALTB=.55768*RADIUS(I)                                               MAIN 698
      IF (ALTB.GT.AL09) ALTB = AL09                                     MAIN 700
      ANF(I,3) = (ALTB - AL03)/SPFCTR                                   MAIN 705
      ANF(I,4) = (ALTB + AL03 - 2.*AL043)/SPFCTR                        MAIN 710
    ALTB=.40825*RADIUS(I)                                               MAIN 712
      IF (AL042.LT.ALTB) AL042 = ALTB                                   MAIN 715
      ANF(I,5) = (AL05 - AL042)/SPFCTR                                  MAIN 720
    ALTB=.14943*RADIUS(I)                                               MAIN 722
      IF (AL041.LT.ALTB) AL041 = ALTB                                   MAIN 725
      ANF(I,6) = (AL01 - AL041)/SPFCTR                                  MAIN 730
  120 CONTINUE                                                          MAIN 735
      DO 130 JJ=1,ISEC                                                  MAIN 740
         NF = ANF(I,JJ) + 1.25                                          MAIN 745
         ANF(I,JJ) = NF                                                 MAIN 750
         IF (ANF(I,JJ).LE.0.5) ANF(I,JJ) = 0.0                          MAIN 755
  130    CONTINUE                                                       MAIN 760
    SDI=(OD-2.0*XW)/12.0                                                MAIN 765
    AXI=(PI*SDI**2)/4.0                                                 MAIN 770
    SDW=(SDO-SDI)/ALOG(SDO/SDI)                                         MAIN 775
    BNDIAM = 2.0*(BNDRAD + SDD*SDO/2.0)                                 MAIN 780
C   COOLER SECTION                                                      MAIN 785
    IVNOC =1                                                            MAIN 790
    IF (PRCCLR.EQ.0.0) GO TO 150                                        MAIN 795
    HTCLR = RADIUS(1)-RADINS                                            MAIN 800
    VNOC=(HTCLR-SDO)/( SDDMIN *SDO * 0.866)                             MAIN 805
    IHNOC=TNOC/VNOC                                                     MAIN 810
    HNOC=FLOAT(IHNOC)                                                   MAIN 815
    VNOC=TNOC/HNOC                                                      MAIN 820
    IVNOC=VNOC + .5                                                     MAIN 825
CCCCCC                                                                  MAIN 830
C   IF NO. OF COOLER TUBE ROWS(IVNOC) .GT. 99, GO TO NEXT CASE          MAIN 835
CCCCCC                                                                  MAIN 840
    IF (IVNOC.LT.99) GO TO 140                                          MAIN 845
    WRITE(6,10200) IVNOC                                                MAIN 850
    GO TO 10                                                            MAIN 855
  140 CONTINUE                                                          MAIN 860
    VNOC=FLOAT(IVNOC)                                                   MAIN 865
  150 CONTINUE                                                          MAIN 870
CCCCCC                                                                  MAIN 875
C   INITIALIZATION                                                      MAIN 880
```

```
CCCCCC                                                                  MAIN 885
  160 CONTINUE                                                          MAIN 890
      IWS = 0                                                           MAIN 895
      ILNG = 0                                                          MAIN 900
      WNCC = WNCI                                                       MAIN 905
      WNCI = WNCI * ADJF / SECFLG                                       MAIN 910
      WSI = WSI *ADJF / SECFLG                                          MAIN 915
      WBI = WBI * ADJF / SECFLG                                         MAIN 920
      TSAT1=STSAT1+459.69                                               MAIN 925
      PSAT1=PSATFN(TSAT1)                                               MAIN 930
      AMOLNC=WNCI/AMWNC                                                 MAIN 935
      IF (VELBI.EQ.0.) GO TO 170                                        MAIN 940
      IF (STBI.LE.1.) STBI = VPSHI(1,1)                                 MAIN 945
      WBI = 3600.0 * ANT * AXI * ROEFN ( CBI, STBI) * VELBI             MAIN 950
  170 CONTINUE                                                          MAIN 955
      WB = WBI / ANT                                                    MAIN 960
      GB=WB/(3600.0*AXI)                                                MAIN 965
      HFG=HFGFN(STSAT1)                                                 MAIN 970
      CALL ZERO(ALMTD,2400)                                             MAIN 975
      CALL ZERO(GFLOW,43200)                                            MAIN 980
      CALL ZERO(ALMTDC,7600)                                            MAIN 985
  180 AMOLSS=WSI/18.015                                                 MAIN 990
      AMOLST=AMOLSS+AMOLNC                                              MAIN 995
      PMIX1=PSAT1*(AMOLST/AMOLSS)                                       MAIN1000
      VG1=VGFN(TSAT1,PMIX1)                                             MAIN1005
      CPB=CPFN(CBI,STBI)                                                MAIN1010
      STB2ES=(WSI*HFG)/( WBI*CPB)+STBI                                  MAIN1015
      SVNC1=10.729*TSAT1/(AMWNC *PMIX1 )                                MAIN1020
      SVMIX1 = 1.0/ (AMOLSS / (AMOLST * VG1) + AMOLNC/ (SVNC1 * AMOLST))MAIN1025
      G2=288.0*SG*SVMIX1                                                MAIN1030
      A = 1. + .02*(SECFLG-1.0)                                         MAIN1035
      DO 190 J=1,ISEC                                                   MAIN1040
         WGAS (J) = WNCI / 12.0 * A                                     MAIN1045
         WS (1,J) = WSI / 12.0 * A                                      MAIN1050
  190    A = A - 0.04                                                   MAIN1055
  200 CONTINUE                                                          MAIN1060
      ASS=0                                                             MAIN1065
      JRC = 0                                                           MAIN1070
      IRENO = 0                                                         MAIN1075
      IRENOC = 0                                                        MAIN1080
      IDT = 0                                                           MAIN1085
      IBT = 0                                                           MAIN1090
      AI=PI*SDI*ALST                                                    MAIN1095
      AO=PI*SDO*ALST                                                    MAIN1100
      AW=PI*SDW*ALST                                                    MAIN1105
      SHWINV=(AO*XW)/(12.0*SKW*AW)                                      MAIN1110
C  CALC. BUNDLE FACE AREA                                               MAIN1115
      BNDFAR = 2.0*PI*(BNDRAD + SDO/2.0)*ALST                           MAIN1120
C  CALC. FOR EACH ROW(I), THE AREA OPEN TO FLOW                         MAIN1125
      PATHAR = (SDD-1.0)*SDO*ALST                                       MAIN1130
      DO 210 I=1,IHNO                                                   MAIN1135
  210    AOTFLW(I) = PATHAR * TBNPR(I)                                  MAIN1140
      AOTFLW(IHNO+1) = ALST * RADINS * PI / 6.0                         MAIN1145
      VEL1=((WSI+WNCI)*SVMIX1)/(3600.0*BNDFAR)                          MAIN1150
      AENT =12.0 * AOTFLW(1)                                            MAIN1155
      ARATIO=AENT/BNDFAR                                                MAIN1160
      VEL2=VEL1/ARATIO                                                  MAIN1165
      IF (ARATIO-0.715) 220,220,230                                     MAIN1170
  220 DELP12=0.4*(1.25-ARATIO)*VEL2**2/G2                               MAIN1175
      GO TO 240                                                         MAIN1180
```

```
  230 DELP12=0.75*(1.0-ARATIO)*VEL2**2/G2                              MAIN1185
  240 DELP23=(VEL2**2-VEL1**2)/G2                                      MAIN1190
      CALL SECALC(AMOLSS,AMOLST,DELP12,DELP23,SVMIX1,NERR)             MAIN1195
      IF (NERR.EQ.0) GO TO 250                                         MAIN1200
      GO TO 280                                                        MAIN1205
C     AVERAGE CONDITION AFTER CONDENSER SECTION AND BEFORE COOLER      MAIN1210
C     SECTION.                                                         MAIN1215
  250 PMXEXT=PMIX(1,1)-DELPVE                                          MAIN1220
      WSUMX=0.0                                                        MAIN1225
      DO 260 J=1,ISEC                                                  MAIN1230
  260    WSUMX=WSUMX + WS(IHNO+1,J)                                    MAIN1235
      WSEXIT = WSUMX * (1.0 + HFCDFL)                                  MAIN1240
      AMLSEX=WSEXIT/18.015                                             MAIN1245
      PSATEX=PMXEXT* AMLSEX / (AMLSEX + WNCC/AMWNC)                    MAIN1250
      TSATEX=TSATFN(PSATEX)                                            MAIN1255
      STSAEX=TSATEX-459.69                                             MAIN1260
      VELEXT=0.0                                                       MAIN1265
      DO 270 J=1,ISEC                                                  MAIN1270
  270    VELEXT=VELEXT+VEL(IHNO + 1, J)                                MAIN1275
      VELEXT=VELEXT/SECFLG                                             MAIN1280
C     CALCULATION THROUGH COOLER                                       MAIN1285
      HNOCSV = HNOC                                                    MAIN1290
      VNOCSV = VNOC                                                    MAIN1295
      IVNOSV = IVNOC                                                   MAIN1300
      CALL COOLEX(DELPC)                                               MAIN1305
      WSI = WSI / ADJF * SECFLG                                        MAIN1310
      IF (EXITFR.EQ.0.) GO TO 280                                      MAIN1315
      EXFR1 = WSC(IVNOC+1) / WSI * 100.                                MAIN1320
      CALL ADJUST (EXFR1,EXITFR,WSI,WS,ALST, IWS,ILNG,INSTM,&280, X1N, MAIN1325
     , YN,WSIMAX,WSIMIN,ALSTMX,ALSTMN,M)                               MAIN1330
      HNOC = HNOCSV                                                    MAIN1335
      VNOC = VNOCSV                                                    MAIN1340
      IVNOC = IVNOSV                                                   MAIN1345
      WSI = WSI * ADJF / SECFLG                                        MAIN1350
      IF (INSTM.EQ.1) GO TO 180                                        MAIN1355
      GO TO 200                                                        MAIN1360
  280 CONTINUE                                                         MAIN1365
      TNO = TNO / ADJF * SECFLG                                        OUTP 255
      XTFR1 = WSC(IVNOC+1) / WSI                                       MAIN1370
      WRITE(6,10400) XTFR1, TNO, TNOC                                  MAIN1375
      WNCI = WNCC                                                      MAIN1380
      CALL OUTPI(DELPC,VEL2,NERR)                                      MAIN1385
      TNO = TNO * ADJF / SECFLG                                        MAIN1390
      GO TO 10                                                         MAIN1395
  290 RETURN                                                           MAIN1400
10000 FORMAT('0' I5,T7, ' TUBE ROWS IN CNDNSR, WHICH EXCEEDS PROGRAM DIMMAIN1405
     ,ENSIONS. PROCEEDING TO NEXT CASE.' )                             MAIN1410
10100 FORMAT(1H0,'****INPUT ERROR, INCORRECT NO. OF ROWS IN CONDENSER, MAIN1415
     ,NRWS=',I10,'   IHNO=',I10)                                       MAIN1420
10200 FORMAT('0'/ I5,T7,' TUBE ROWS IN COOLER, WHICH EXCEEDS PROGRAM DIMMAIN1425
     ,ENSIONS. PROCEEDING TO NEXT CASE.' )                             MAIN1430
10400 FORMAT('0',T3, 'COOLER EXIT STEAM FRAC. ' F7.4, T40,             MAIN1445
     , 'ACTUAL TUBES IN CONDENSER',F8.1, T75,'ACTUAL TUBES IN COOLER', MAIN1450
     , F8.1 )                                                          MAIN1455
      END                                                              MAIN1460
```

```
      SUBROUTINE ZERO(A,N)
      DIMENSION A(1)
      N4=N/4
      DO 1 J=1,N4
    1 A(J)=0.
      RETURN
      END
```

```
      SUBROUTINE ADJUST (EXFR1,EXITFR,WSI,WS,ALST, IWS,ILNG,INSTM,*,
     , X1N,YN,WSIMAX,WSIMIN,ALSTMX,ALSTMN,M)
C******
C         SUBROUTINE ADJUST CORRECTS EITHER INPUT STEAM OR TUBE LENGTH
C         TO GIVE A PREDETERMINED EXIT STEAM FRACTION  (FROM THE COOLER)
C         AS A PERCENT OF STEAM INPUT,     JAH    4/70
C******
      DIMENSION X1N(11),YN(11)
      IF (ABS((EXITFR-EXFR1)/EXITFR).LT..05) GO TO 120
      IF (ILNG.NE.0.OR.IWS.NE.0) GO TO 10
      WSIMAX = 0.
      WSIMIN = 0.
      ALSTMX = 0.
      ALSTMN = 0.
   10 CONTINUE
      EXTFR = EXITFR / 100.
      XTFR1 = EXFR1 / 100.
      IF (EXFR1.LT.EXITFR) GO TO 20
      ALSTMN = ALST
      WSIMAX = WSI
      GO TO 30
   20 WSIMIN = WSI
      ALSTMX = ALST
   30 CONTINUE
      IF (INSTM.EQ.0) GO TO 70
      IF (IWS.LE.10) GO TO 40
      WRITE(6,10200) WSIMAX,WSIMIN,EXFR1
      GO TO 130
   40 CONTINUE
C******
C         ADJUSTMENT FOR  INLET STEAM
C******
      DELWP = ABS(WSIMAX-WSIMIN)
      WSIOLD = WSI
      WSI = XTR(WSI,XTFR1,IWS,EXTFR,-1.0,X1N,YN,M)
      IF (WSI.GT.WSIMIN) GO TO 50
      DELW = WSIMIN * 0.01 / IWS
      IF (DELW.GT.DELWP) DELW = DELWP / 2.0
      WSI = WSIMIN + DELW
      GO TO 60
   50 IF (WSIMAX.EQ.0..OR.WSI.LT.WSIMAX) GO TO 60
      DELW = WSIMAX * 0.01 / IWS
      IF (DELW.GT.DELWP) DELW = DELWP / 2.
      WSI = WSIMAX - DELW
   60 CONTINUE
      WRITE(6,10100) IWS,WSIOLD,XTFR1,WSI
      IWS = IWS + 1
      GO TO 110
   70 CONTINUE
      IF (ILNG.LE.10) GO TO 80
      WRITE(6,10300) ALSTMX,ALSTMN,ALST,EXFR1
      GO TO 130
   80 CONTINUE
C****
C         ADJUSTMENT FOR TUBE LENGTH
C******
      DELAP = ABS(ALSTMX-ALSTMN)
      ALTOLD = ALST
      ALST = XTR(ALST,XTFR1,ILNG,EXTFR,1.0,X1N,YN,M)
      IF (ALST.GT.ALSTMN) GO TO 90
```

```
      DELA = ALSTMN * 0.01 / ILNG                                       ADJU 300
      IF (DELA.GT.DELAP) DELA = DELAP / 2.0                             ADJU 305
      ALST = ALSTMN + DELA                                              ADJU 310
      GO TO 100                                                         ADJU 315
   90 IF (ALST.LT.ALSTMX.OR.ALSTMX.EQ.0.) GO TO 100                     ADJU 320
      DELA = ALSTMX * 0.01 / ILNG                                       ADJU 325
      IF (DELA.GT.DELAP) DELA = DELAP / 2.0                             ADJU 330
      ALST = ALSTMX - DELA                                              ADJU 335
  100 CONTINUE                                                          ADJU 340
      WRITE(6,10000) ILNG,ALTOLD,XTFR1,ALST                             ADJU 345
      ILNG = ILNG + 1                                                   ADJU 350
  110 RETURN                                                            ADJU 355
  120 WRITE(6,10400)                                                    ADJU 360
  130 RETURN1                                                           ADJU 365
10000 FORMAT(1H0,I5,' ALTOLD =',F10.3,'  XTFR1 =',F7.4,' ALST = ',F10.3)ADJU 370
10100 FORMAT(1H0,I5,' WSIOLD =',F10.3,'  XTFR1 =',F7.4,' WSI = ',F10.3) ADJU 375
10200 FORMAT('ONO CONVERGENCE ON EXITFR IN 10 TRIES,   WSIMAX = ',E15.7,ADJU 380
     , '   WSIMIN = ',E15.7, '  EXFR1 = ',F10.5)                        ADJU 385
10300 FORMAT (1H0                                                       ADJU 390
     , ' NO CONVERGENCE FOR EXITFR AFTER 10 TRIES,  ALSTMX =',E12.5,    ADJU 395
     , '  ALSTMN =',E12.5,'  ALST =',E12.5,'  EXFR1 =',E12.5)            ADJU 400
10400 FORMAT('0',10X,'CONVERGENCE CRITERIA MET FOR EXIT STEAM')         ADJU 405
      END                                                               ADJU 410
```

```
      SUBROUTINE COOLEX(DELPC)                                          COOL   0
CCC                                                                     COOL   5
C                                                                       COOL  10
C     SUBROUTINE COOLEX     CIRC 99 -- 360/OS  12/20/68                 COOL  15
C                                                                       COOL  20
CCC                                                                     COOL  25
      COMMON/INPT/ ALST ,ANT ,BAFFLE ,HFCDFL, CBI ,EXITFR ,FOUL ,GAS ,  COOL  30
     , OD , OUTPUT ,PRCCLR ,RADFLG ,SDO ,SDDMIN , SECFLG ,SKW ,STBI ,   COOL  35
     , STSAT1 ,VELBI , VSFLG ,WNCI ,WSI ,XW ,VPSHI(100,6), VPSHIC(100) ,COOL  40
     ,  FDAVE ,ENHI ,ENHO ,ENHF ,WBI ,STBIP,ANTP,VELBIP,ADJF,IDENT(20), COOL  45
     , INSTM ,IFLOAT ,ITRAN ,IPNCH ,NRWSP ,NRWSCP ,NRWS ,NRWSC          COOL  50
      COMMON/INTEG/IHNO ,IHNOC ,ILNG ,ISEC , IVNO ,IVNOC ,J ,JGAS ,JRC ,COOL  55
     ,  IRENO ,IRENOC ,IDT ,IBT                                         COOL  60
      COMMON AI ,AMLSEX ,AMOLNC ,AMWNC ,AO , ASS ,AW ,AXI ,BNDIAM ,COOR COOL  65
     , (3), DELPVE ,GB ,HFG ,HNO ,HNOC , PMIX1 ,PMXEXT ,PSATEX ,RADINS ,COOL  70
     ,  SDI , SDO ,SF ,SG ,SHMINV ,STBAVE , ST82ES ,STFO ,STSAEX ,TB2 , COOL  75
     , TNO , TNOC ,TNOFR ,TSATEX ,VELEXT ,VG , VLCMAX ,VNO ,VNOC ,WB ,  COOL  80
     , WNCC ,WSEXIT ,XNC , SMTBI, SMTB2, SMWB, SUMQ, SMTBIC, SMTB2C,    COOL  85
     , SMWBC, SUMQC                                                     COOL  90
      COMMON/DIM6/ C (6),DELP (6),WGAS (6),WP (6) ,WSP(6)               COOL  95
      COMMON/DIM1/ALMTDC(100), GFLOWC(100),PMIXC (100),PSATC (100),RCC  COOL 100
     , (100), SHIC (100),SHNFC (100),STSATC(100), UNC (100),VELC (100), COOL 105
     , VNREC (100),VPSHC (100), VPSHHC(100),WCNDC (100),WSC (100),      COOL 110
     , HEFFC(100) ,ROUTC(100) ,QOAC(100) , CUMDPC(100)                  COOL 115
      COMMON/DIM16/ ALMTD (100,6) , ANF (100,6), GFLOW (100,6),PMIX     COOL 120
     , (100,6), PSAT (100,6), RC (100,6),SHI (100,6), SHN (100,6),STSAT COOL 125
     , (100,6) ,UN (100,6), VEL (100,6),VNRE (100,6) ,VPSH (100,6),     COOL 130
     , VPSHH (100,6),WCND (100,6), WS (100,6) , HEFF(100,6) , ROUT(100, COOL 135
     , 6) ,QOA(100,6) ,CUMDP(100,6),AOTFLW (100), RADIUS (100), TBNPR   COOL 140
     , (100)                                                            COOL 145
      INTEGER GAS(5)                                                    COOL 150
      II = 2                                                            COOL 155
      SMTBIC = 0.0                                                      COOL 160
      SMWBC = 0.0                                                       COOL 165
      SMTB2C = 0.0                                                      COOL 170
      SUMQC = 0.0                                                       COOL 175
      IF (PRCCLR.EQ.0.0) GO TO 240                                      COOL 180
      AMLSCC = WNCC / AMWNC                                             COOL 185
      AXOC= SDO*HNOC*ALST * (SDDMIN - 1.0)                              COOL 190
      SVGEXT=VGEN(TSATEX,PMXEXT)                                        COOL 195
      SVNCEX=10.729*TSATEX/( AMWNC*(PMXEXT))                            COOL 200
      AMLT = AMLSEX + AMLSCC                                            COOL 205
      SVMXEX = 1.0 / (AMLSEX / (AMLT * SVGEXT) + AMLSCC / (AMLT *       COOL 210
     , SVNCEX ))                                                        COOL 215
      VELC(1)=(WSEXIT+WNCC)*SVMXEX/(AXOC*3600.0)                        COOL 220
      IF (VELC(1).GT.VLCMAX) WRITE(6,10200) VELC(1),IVNOC,HNOC          COOL 225
      IF (ITRAN.EQ.1) GO TO 20                                          COOL 230
      AXOM=(WSEXIT+WNCC)*SVMXEX/(VLCMAX*3600.0)                         COOL 235
      IF (AXOM.LT.AXOC) GO TO 10                                        COOL 240
      AXOC = AXOM                                                       COOL 245
      HNOC=AXOC/( SDO*ALST * (SDDMIN - 1.0 ))                           COOL 250
      VNOC=TNOC/HNOC                                                    COOL 255
      IVNOC = VNOC + 0.1                                                COOL 260
      HNOC = TNOC / FLOAT(IVNOC)                                        COOL 265
      AXOC = SDO * HNOC * ALST * (SDDMIN-1.)                            COOL 270
      IF (IVNOC.LT.1) IVNOC = 1                                         COOL 275
      VELC(1)=(WSEXIT+WNCC)*SVMXEX/(AXOC*3600.0)                        COOL 280
      WRITE(6,10400) VELC(1),IVNOC,HNOC                                 COOL 285
   10 IF (NRWSC.EQ.0) GO TO 20                                          COOL 290
      IF (NRWSC.NE.IVNOC) WRITE(6,10000) NRWSC,IVNOC                    COOL 295
```

```
   20 G2=288.0*SG*SVMXEX                                                COOL 300
      IF (VELC(1)-VELEXT) 30,30,40                                      COOL 305
   30 A2DA1=VELC(1)/VELEXT                                              COOL 310
      DELPCT=((1.0-A2DA1)*VELEXT**2)/G2                                 COOL 315
      GO TO 70                                                          COOL 320
   40 A2DA1=VELEXT/VELC(1)                                              COOL 325
      IF (A2DA1-0.715) 60,60,50                                         COOL 330
   50 DELPCT=(0.75*(1.0-A2DA1)*VELC(1)**2)/G2                           COOL 335
      GO TO 70                                                          COOL 340
   60 DELPCT=(0.4*(1.25-A2DA1)*VELC(1)**2)/G2                           COOL 345
   70 PMIXC(1)=PMXEXT-DELPCT -(VELC(1)**2 -VELEXT**2)/G2                COOL 350
      PSATC(1)=PMIXC(1)*AMLSEX/(AMLSEX+AMLSCC)                          COOL 355
      PAL=PSATC(1)                                                      COOL 360
      IF (PAL.GT.0.) GO TO 80                                           COOL 365
      IN = 1                                                            COOL 370
      WRITE(6,10300) PMIXC(1),IN                                        COOL 375
      GO TO 250                                                         COOL 380
   80 CONTINUE                                                          COOL 385
      TAL = TSATFN(PAL)                                                 COOL 390
      STSATC(1) = TAL - 459.69                                          COOL 395
      WSC(1)=WSEXIT                                                     COOL 400
      VG=VGFN(TAL,PMIXC(1))                                             COOL 405
      AMLSSC = WSC(1)/18.015                                            COOL 410
      VNC=10.729 * TAL / (AMWNC * PMIXC(1))                             COOL 415
      VMIX=1.0/((AMLSSC /(VG*(AMLSSC +AMLSCC))) +(AMLSCC/(VNC* (AMLSSC +COOL 420
     , AMLSCC)))))                                                      COOL 425
      VELC(1)=(WSC(1)+WNCC)*VMIX/(AXOC*3600.0)                          COOL 430
      NFC = (VNOC+1.) / 2.0                                             COOL 435
      ANFC = NFC                                                        COOL 440
      IROWC = 0                                                         COOL 445
      DO 230IK=1,IVNOC                                                  COOL 450
         I=IK                                                           COOL 455
         LJ = 7                                                         COOL 460
         STBI = VPSHIC(I)                                               COOL 465
         IF (STBI.LT.STBIP) STBI = STBIP                                COOL 470
         CALL HETTRN(STSATC(I),ANFC ,WSC(I),WNCC, UNC(I),ALMTDC(I),     COOL 475
     ,    SHIC(I),SHNFC(I),RCC(I),ROUTC(I) ,AXOC,VNREC(I),DUMMY,        COOL 480
     ,    VPSHHC(I),HEFFC(I),LJ,II,I)                                   COOL 485
         IF (ASS.NE.0.) GO TO 250                                       COOL 490
         HFG=HFGFN(STSATC(I))                                           COOL 495
         WCNDC(I)=UNC(I)*AO*HNDC*ALMTDC(I)/HFG                          COOL 500
         CALL PRSDRP(TAL ,VMIX,WSC(I),WNCC,AXOC,SDO,VPSHC(I), DELTPC ,  COOL 505
     ,    ENHF)                                                         COOL 510
         JY = 0                                                         COOL 515
   90    WSC(I+1)=WSC(I)-WCNDC(I)                                       COOL 520
         GFLOWC(I) = (WSC(I)+WNCC)/ AXOC                                COOL 525
         IF (I.GT.1) GO TO 100                                          COOL 530
         IF (WSC(I+1)) 110,110,160                                      COOL 535
C     IF IROWC.EQ.1 PRGRM IS FORCING A DECREASING COND. RATE            COOL 540
  100    IF (IROWC.EQ.1) GO TO 110                                      COOL 545
C     IF PREVIOUS COND. RATE PREDICTS STEAM FLOW WILL GO NEG. AFTER THE COOL 550
C     NEXT ROW, SET CONDENSATE TO ONE-THIRD OF STEAM FLOW.              COOL 555
         IF (WSC(I-1)-3.0*WCNDC(I-1)) 110,110,160                       COOL 560
  110    WCNDC(I) = WSC(I) / 3.                                         COOL 565
         IROWC = 1                                                      COOL 570
         STSATC(I+1) = STFO                                             COOL 575
         TSATMN=STSATC(I+1)+459.69                                      COOL 580
         PMIN=PSATFN(TSATMN)                                            COOL 585
         WCNDC(I)=WSC(I)*(PSATC(I)-PMIN)/PSATC(I)                       COOL 590
         WSC(I+1)=WSC(I)-WCNDC(I)                                       COOL 595
```

```
      QGC=(WSC(I)*CPSFN(TAL) /18.015+WNCC*CPAFN(TAL,JGAS) / AMWNC) *
     , (TAL - TSATMN)
      QTC=QGC+WCNDC(I)*HFG
      IF (STSATC(I)-TB2) 120,120,130
120   TB2 = STSATC(I) - 0.1
130   CONTINUE
      IF (STSATC(I+1).GT.STBI) GO TO 140
      ALMTDC(I) = ALMTDC(I-1)
      GO TO 150
140   CONTINUE
      ALMTDC(I)=((STSATC(I+1)-STBI)-(STSATC(I)-TB2))/ALOG((STSATC(I+
     , 1)- STBI)/(STSATC(I)-TB2))
150   CONTINUE
      UNC(I)=QTC/(AO*HNOC*ALMTDC(I))
      AMLSSC = WSC(I+1)/18.015
      PMIXC(I+1)=PMIXC(I)-DELTPC
      PSATC(I+1)=(PMIXC(I+1)*AMLSSC) / (AMLSSC + AMLSCC)
      TSATC = TSATMN
      GO TO 210
160   AMLSSC = WSC(I+1)/18.015
      PMIXC(I+1)=PMIXC(I)-DELTPC
      PSATC(I+1)=(PMIXC(I+1)*AMLSSC) / (AMLSSC + AMLSCC)
      PAL=PSATC(I+1)
      IF (PAL.GT.0.) GO TO 170
      WRITE(6,10300) PMIXC(I),I
      GO TO 250
170   CONTINUE
      TSATC = TSATFN(PAL)
      STSATC(I+1) = TSATC - 459.69
      IF (ABS(TSATC-TAL).LT.0.001) TSATC = TAL - 0.001
      WCNDP=(UNC(I)*AO*HNOC*ALMTDC(I)-(WSC(I )*CPSFN(TSATC) / 18.015+
     , WNCC*CPAFN(TSATC,JGAS) / AMWNC) *(TAL - TSATC)) / HFG
      IF (ABS(WCNDP/WCNDC(I)-1.0)-.005) 200,180,180
180   WCNDC(I)=WCNDP
      JY = JY + 1
      IF (JY-50) 90,90,190
190   WRITE(6,10100)I
200   CONTINUE
      WCNDC(I) = WCNDP
      WSC(I+1) = WSC(I) - WCNDC(I)
      AMLSSC =WSC(I+1)/18.015
      PSATC(I+1)=(PMIXC(I+1)*AMLSSC) / (AMLSSC + AMLSCC)
      PAL=PSATC(I+1)
      TSATC = TSATFN(PAL)
      STSATC(I+1) = TSATC - 459.69
210   VG=VGFN(TSATC ,PMIXC(I+1))
      VNC=10.729*TSATC /(AMWNC * PMIXC(I+1))
      VMIX=1.0/((AMLSSC /(VG*(AMLSSC +AMLSCC))+(AMLSCC/(VNC*
     , (AMLSSC +AMLSCC))))
      VELC(I+1)=(WSC(I+1)+WNCC)*VMIX/(AXOC *3600.0)
      SMTBIC = SMTBIC + WB * HNOC * STBI
      SMWBC = SMWBC + WB * HNOC
      SMTB2C = SMTB2C + WB * HNOC * TB2
      SUMQC = SUMQC + UNC(I) * AO * ALMTDC(I) * HNOC
      QOAC(I) = UNC(I) * ALMTDC(I)
      CUMDPC(I) = (PMIX1*27.7) - (PMIXC(I)*27.7)
      TAL = TSATC
      IF (MOD(I,2)) 230,220,230
220   ANFC = ANFC - 1.0
230   CONTINUE
```

```
      DELPC=PMIXC(1)-PMIXC(IVNOC+1)                                     COOL 900
  240 CONTINUE                                                          COOL 905
      IF (ASS.NE.0.) WSC(IVNOC+1) = WSC(I)                              COOL 910
      IF (PRCCLR.EQ.0.) WSC(IVNOC+1) = WSEXIT                           COOL 915
      RETURN                                                            COOL 920
  250 DO 260 IFX=I,IVNOC                                                COOL 925
         UNC(IFX) = UNC(IFX-1)                                          COOL 930
  260    WSC(IFX) = WSC(IFX-1)                                          COOL 935
      WSC(IVNOC+1) = WSC(IVNOC)                                         COOL 940
      RETURN                                                            COOL 945
10000 FORMAT(1H0,'****  INCORRECT NO. OF ROWS IN COOLER,   NRWSC =',I10,COOL 950
     , '   IVNOC =',I10)                                                COOL 955
10100 FORMAT(1H0, 25HNO CONVERGENCE FOR WCNDC(, I2, 2H). )              COOL 960
10200 FORMAT(1H0,'**** STEAM VELOCITY IN FIRST ROW OF COOLER TUBES EXCEECOOL 965
     ,DS MAX ALLOWABLE,  VELC(1) =',E15.5/15X,I10,' ROWS OF TUBES',F10.3COOL 970
     ,,'  TUBES PER ROW')                                               COOL 975
10300 FORMAT(1H0,'**** SATURATED STEAM PRESSURE IN COOLER HAS GONE NEGATCOOL 980
     ,IVE,   PMIXC =',E15.5,'   ROW'I5)                                 COOL 985
10400 FORMAT('0    COOLER DIMENSIONS ADJUSTED TO LOWER STEAM VELOCITY,  COOL 990
     ,VELC(1) =',E12.5/' ',I9,'ROWS OF TUBES',F10.3,'TUBES PER ROW')    COOL 995
      END                                                               COOL1000
```

```
      SUBROUTINE HETTRN(STSAT,ANF,WS,WNC,VNF,ALMTD, SHI,SHNF, RC,ROUT ,
     , AXO,XNRE,XNU, VPSHH,XHEFF,LJ,II,IR)
C**   DEC 69 REV.   COLBJ,FDAVE
      COMMON/INPT/ ALST ,ANT ,BAFFLE ,HFCDFL, CBI ,EXITFR ,FOUL ,GAS ,
     , OD , OUTPUT ,PRCCLR ,RADFLG ,SDD ,SDDMIN , SECFLG ,SKW ,STBI ,
     , STSAT1 ,VELBI , VSFLG ,WNCI ,WSI ,XW ,VPSHI(100,6), VPSHIC(100) ,
     ,  FDAVE ,ENHI ,ENHO ,ENHF ,WBI ,STBIP,ANTP,VELBIP,ADJF,IDENT(20),
     , INSTM ,IFLOAT ,ITRAN ,IPNCH ,NRWSF ,NRWSCP ,NRWS ,NRWSC
      COMMON/INTEG/IHNO ,IHNOC ,ILNG ,ISEC , IVNO ,IVNOC ,J ,JGAS ,JRC ,
     ,  IRENO ,IRENOC ,IDT ,IBT
      COMMON AI ,AMLSEX ,AMOLNC ,AMWNC ,AO , ASS ,AW ,AXI ,BNDIAM ,COOR
     , (3), DELPVE ,GB ,HFG ,HNO ,HNOC , PMIX1 ,PMXEXT ,PSATEX ,RADINS ,
     ,  SDI , SDO ,SF ,SG ,SHWINV ,STBAVE , STB2ES ,STFO ,STSAEX ,TB2 ,
     , TNO , TNOC ,TNOFR ,TSATEX ,VELEXT ,VG , VLCMAX ,VNO ,VNOC ,WB ,
     , WNCC ,WSEXIT ,XNC , SMTBI, SMTB2, SMWB, SUMQ, SMTBIC, SMTB2C,
     , SMWBC, SUMQC
      DIMENSION R2(3),E2OK(3)
      INTEGER GAS(5)
      DATA HEFF,UEST,DGFLM,DLFLM/2100.,700.,0.05,2.0/
      DATA R2,E2OK / 3.617,3.996,3.838,97.0,190.0,140.75/
      K = 0
      RC=WNC/(WS+WNC)
      TSAT=STSAT+459.69
      GMAX =(WS+WNC) / AXO
      PSAT = PSATFN(TSAT)
      AMOLSS = WS / 18.015
      AMOLSC = WNC / AMWNC
      AMOLT = AMOLSS + AMOLSC
      AMWAV = (WS+WNC) / AMOLT
      RMWNC = SQRT(AMWNC) * AMOLSC / AMOLT
      RMWSC = 4.24444 * AMOLSS / AMOLT
      AVIS = (SMUFN(TSAT) * RMWSC + AMUFN(TSAT,JGAS) * RMWNC) / (RMWSC +
     ,  RMWNC)
      HSTO = HFGFN(STSAT)
      BB=GB*3600.0
      STBAVE=( STBI+ TB2 ) / 2.0
      DELFLM = DLFLM
      DLGFLM = DGFLM
      STWO = STSAT - DELFLM - DLGFLM
      STFO=(STSAT+STWO)/2.0
      XNRE = SDO * (WS+WNC)/(AXO * 3600. * AVIS)
      IF (XNRE.GE.100.) GO TO 30
      GO TO (10,20),II
   10 IF (IRENO.EQ.0) WRITE(6,10600) XNRE,LJ,IR
      IRENO = 1
      GO TO 30
   20 IF (IRENOC.EQ.0) WRITE(6,10700) XNRE,LJ,IR
      IRENOC = 1
   30 CONTINUE
      COLBJ = EXP(0.53883 - 0.544 * ALOG(XNRE))
      IF (WNCI.EQ.0.) GO TO 40
      PATM = PSAT / 14.7
      PGB = PSAT * (AMOLSC/AMOLSS)
      TSATK = TSAT / 1.8
      CALL DFSVTY(TSATK,PATM,18.015,AMWNC,2.655,R2(JGAS),363.,
     , E2OK(JGAS),0.,0.,DG,DGG)
C*****
C  0.258 CONVERTS CM2/S TO FT2/HR AND 3600. CONVERTS VISCOSITY TO
C  LB/F-HR FROM LB/F-S.          0.258 * 3600. = 928.8
C*******
```

```
      XNSCH = (AVIS * TSAT * 10.73 / ((PSAT+PGB) * AMWAV * DG)) * 928.8 HETT 300
      CJ = COLBJ * GMAX / (XNSCH ** 0.666667 )                          HETT 305
   40 TB2 = STSAT - (STSAT - STBI) / EXP(UEST * AO / (WB * CPFN(CBI,    HETT 310
     , STBAVE)))                                                        HETT 315
      STBAVE = (STBI + TB2) / 2.                                        HETT 320
      SKBO = SKBFN(0.,STFO)                                             HETT 325
      SKB = SKBFN(CBI,STBAVE)                                           HETT 330
      BMU = BMUFN(CBI,STBAVE)                                           HETT 335
      SHBI = CPFN(CBI,STBAVE)                                           HETT 340
      XNREB = SDI * BB / BMU                                            HETT 345
      XNPRB = SHBI * BMU / SKB                                          HETT 350
      SHI = 0.023 * (XNREB) ** 0.8 * XNPRB ** 0.33333 * (SKB / SDI) *   HETT 355
     , ENHI                                                             HETT 360
      RIN=AO/(SHI*AI)                                                   HETT 365
      BNF = ANF                                                         HETT 370
      IF (ANF.LE.1.0) BNF = 1.0                                         HETT 375
      SHMK=0.725*(SKBO**3*ROEFN(0.0,STFO)**2*HFGFN(STFO)* 416975040.0/  HETT 380
     , (BMUFN(0,STFO)*SDO*DELFLM)) ** .25 * ENHO                        HETT 385
      IF(SHMK.GT.40000.) CALL ABEND(1)
      IF (SHMK.LT.40000..AND.DELFLM.GT..0001) GO TO 50                  HETT 390
      IF (II.EQ.1.AND.ASS.EQ.0.) WRITE(6,10800)SHMK,DELFLM,LJ,IR        HETT 395
      IF (II.EQ.2.AND.ASS.EQ.0.) WRITE(6,10900)SHMK,DELFLM,IR           HETT 400
      ASS = 1.                                                          HETT 405
      DLFLM = 2.0                                                       HETT 410
      GO TO 180                                                         HETT 415
   50 CONTINUE                                                          HETT 420
      IF (FDAVE.LT.0..OR.BNF.LT.2.) GO TO 60                            HETT 425
      FDAVN = 0.6*FDAVE + (1.-0.5647*FDAVE) / BNF ** .20                HETT 430
      FDAVM = 0.6*FDAVE + (1.-0.5647*FDAVE) / (BNF-1) ** .20            HETT 435
      SHNF = SHMK * (BNF * FDAVN - (BNF-1.) * FDAVM)                    HETT 440
      GO TO 70                                                          HETT 445
   60 SHNF = 0.95 * (BNF ** 0.9 - (BNF-1.) ** 0.9) * SHMK               HETT 450
   70 RFACT = RIN + SHWINV + FOUL + 1. / SHNF                           HETT 455
C                                                                       HETT 460
C     COMPUTE LOG MEAN DELTA TEMP., ALMTD                               HETT 465
C                                                                       HETT 470
      HOMCI = STSAT - STBI                                              HETT 475
      HIMCO = STSAT - TB2                                               HETT 480
      RODT = HOMCI/HIMCO                                                HETT 485
C     IF EITHER INLET OR OUTLET DELTA T IS NEG., ALMTD = PREVIOUS VALUE HETT 490
      IF (HIMCO.GT.0.0.AND.HOMCI.GT.0.0) GO TO 80                       HETT 495
      ALMTD = 0.001                                                     HETT 500
      IF (IDT.EQ.0) WRITE(6,10400) HOMCI,HIMCO,LJ,IR,II                 HETT 505
      IDT = 1                                                           HETT 510
      GO TO 100                                                         HETT 515
C     IF INLET/OUTLET DELTA T RATIO IS NEAR 1.0, ALMTD = ARITH. AVG.    HETT 520
   80 IF (RODT.LT.0.9.OR.RODT.GT.1.1) GO TO 90                          HETT 525
      ALMTD = 0.5 * (HOMCI + HIMCO)                                     HETT 530
      IF (JRC.EQ.0) WRITE(6,10500) STSAT,STBI,TB2,LJ,IR,II              HETT 535
      JRC = 1                                                           HETT 540
      GO TO 100                                                         HETT 545
   90 ALMTD = (HOMCI - HIMCO) / ALOG(RODT)                              HETT 550
  100 CONTINUE                                                          HETT 555
      IF (WNCI.NE.0.) GO TO 110                                         HETT 560
      ROUT = 1. / SHNF                                                  HETT 565
      UTEST = 1. / RFACT                                                HETT 570
      XNU = SHNF * SDO / SKBO                                           HETT 575
      IF (ABS(UEST-UTEST)/UTEST.LT..001) GO TO 170                      HETT 580
      UESTSV = UEST                                                     HETT 585
      UEST = UTEST                                                      HETT 590
```

```
      IF (K.GT.4) UEST = 0.5 * (UTEST + UESTSV)                         HETT 595
      STWO = STSAT - (STSAT-STBAVE) * UTEST / SHNF                      HETT 600
      STCO = STSAT                                                      HETT 605
      STFO = (STCO +STWO) / 2.                                          HETT 610
      DGFLM = 0.                                                        HETT 615
      DLFLM = STCO - STWO                                               HETT 620
      DELFLM = DLFLM                                                    HETT 625
      K = K + 1                                                         HETT 630
      IF (K.LT.10) GO TO 40                                             HETT 635
      WRITE(6,10100) UESTSV,UTEST                                       HETT 640
      GO TO 170                                                         HETT 645
  110 CONTINUE                                                          HETT 650
      STCO = STSAT - DLGFLM                                             HETT 655
      T = (TSAT + STCO + 459.69) / 2.0                                  HETT 660
      DTDP = 1./(((6452.562 + 2.*837533.2 /T) / T**2) * EXP(14.15012 -  HETT 665
     , (6452.562 + 837533.2 /T) / T))                                   HETT 670
      BONE = -1.*(CJ * HSTO / ALMTD + (PGB * DTDP/ALMTD + 1.) / RFACT)  HETT 675
      CONE = CJ * HSTO / (ALMTD * RFACT)                                HETT 680
      UTEST = (-SQRT(BONE**2 - 4.*CONE) - BONE) / 2.                    HETT 685
      DENOM = 1. - UTEST * RFACT                                        HETT 690
      IF (DENOM.GT.1.E-7) GO TO 120                                     HETT 695
      HEFF = 1.0E8                                                      HETT 700
      GO TO 130                                                         HETT 705
  120 HEFF = UTEST / DENOM                                              HETT 710
  130 CONTINUE                                                          HETT 715
      ROUT = 1. / HEFF + 1. / SHNF                                      HETT 720
      TDIF = STSAT - STBAVE                                             HETT 725
      IF (TDIF.GT.0.) GO TO 140                                         HETT 730
      IF (IBT.EQ.0) WRITE(6,10300) STSAT,STBAVE,LJ,IR                   HETT 735
      IBT = 1                                                           HETT 740
      TDIF = .1                                                         HETT 745
  140 CONTINUE                                                          HETT 750
      DELTAU = TDIF * UTEST                                             HETT 755
      DGFLM = DELTAU / HEFF                                             HETT 760
      DLFLM = DELTAU / SHNF                                             HETT 765
      STCO = STSAT - DGFLM                                              HETT 770
      STWO = STCO - DLFLM                                               HETT 775
      STFO = (STCO + STWO) / 2.                                         HETT 780
      XNU = SDO / (SKBO * ROUT)                                         HETT 785
      IF (ABS(UTEST-UEST)/UTEST.LT..001) GO TO 150                      HETT 790
      DELFLM = DLFLM                                                    HETT 795
      DLGFLM = DGFLM                                                    HETT 800
      UESTSV = UEST                                                     HETT 805
      UEST = UTEST                                                      HETT 810
      K = K + 1                                                         HETT 815
      IF (K.GT.4) UEST = 0.5 * (UTEST + UESTSV)                         HETT 820
      IF (K.LT.10) GO TO 40                                             HETT 825
      WRITE(6,10100) UESTSV,UTEST                                       HETT 830
      GO TO 170                                                         HETT 835
  150 IF (ABS(DELFLM-DLFLM).LT..01) GO TO 160                           HETT 840
      DELFLM = DLFLM                                                    HETT 845
      DLGFLM = DGFLM                                                    HETT 850
      K = K +1                                                          HETT 855
      IF (K.LT.10) GO TO 40                                             HETT 860
      WRITE(6,10200) DELFLM,LJ,IR                                       HETT 865
  160 IF (ABS(DLGFLM-DGFLM).LT..001) GO TO 170                          HETT 870
      DLGFLM = DGFLM                                                    HETT 875
      K = K + 1                                                         HETT 880
      IF (K.LT.10) GO TO 40                                             HETT 885
      WRITE(6,10000) DLGFLM,UEST,UTEST,LJ,IR                            HETT 890
```

```
  170 VNF = UTEST                                                       HETT 895
      VPSHH = TB2                                                       HETT 900
      XHEFF = HEFF                                                      HETT 905
      ROUT = 1. / ROUT                                                  HETT 910
  180 RETURN                                                            HETT 915
10000 FORMAT(1H0,' NO CONVERGENCE IN FILM TEMPERATURES', ' DLGFLM=',    HETT 920
     , E12.5,' UEST =',E12.5,'  UTEST =',E12.5/' SECTOR = ', I5,        HETT 925
     , ' ROW =' ,I5)                                                    HETT 930
10100 FORMAT(1H0,' NO CONVERGENCE IN UESY,  UEST = ',E12.5,' UTEST = ', HETT 935
     , E12.5)                                                           HETT 940
10200 FORMAT(1H0,' NO CONVERGENCE IN DELFLM,  DELFLM=',E12.5,           HETT 945
     , ' SECTOR=',I5,' ROW=',I5)                                        HETT 950
10300 FORMAT(1H0,                                                       HETT 955
     , '  SAT STEAM TEMP LESS THAN AVG BRINE TEMP,    STSAT =',E12.5,   HETT 960
     , ' STBAVE = ',E12.5,'   SECTOR',I3,'   ROW',I4)                   HETT 965
10400 FORMAT(1H0,'EITHER INLET OR OUTLET DELTA T IS NEG.,  INLET =',    HETT 970
     , E13.6,'  OUTLET = ',E13.6,'  SECTOR',I3,'  ROW',2I3)             HETT 975
10500 FORMAT(1H0,' INLET/OUTLET DELTA T RATIO IS NEAR 1.0, STSAT=',     HETT 980
     , E13.6,'  STBI=',E13.6,'  TB2=',E13.6,'  SECTOR',I3, '  ROW',2I5) HETT 985
10600 FORMAT(1H0,'REYNOLDS NUMBER IN CONDENSER ON SHELL SIDE HAS FALLEN HETT 990
     ,BELOW 100,  RENO = ',E15.6,' SECTOR',I5,'  ROW  ',I5)             HETT 995
10700 FORMAT(1H0,'REYNOLDS NUMBER IN COOLER    ON SHELL SIDE HAS FALLEN HETT1000
     ,BELOW 100,  RENO = ',E15.6,' SECTOR',I5,'  ROW  ',I5)             HETT1005
10800 FORMAT(1H0,' RUN TERMINATING IN CONDENSER.  SHMK  =',E13.6,       HETT1010
     , 'DELFLM = ',E13.6,' SECTOR ',I5,'  ROW ',I5)                     HETT1015
10900 FORMAT(1H0,' RUN TERMINATING IN COOLER      SHMK  =',E13.6,       HETT1020
     , 'DELFLM = ',E13.6,' ROW =',I5)                                   HETT1025
      END                                                               HETT1030
```

```
      SUBROUTINE INPUT(*,*)                                             INPU   0
      COMMON/INPT/ ALST ,ANT ,BAFFLE ,HFCDFL, CBI ,EXITFR ,FOUL ,GAS ,  INPU   5
     , OD , OUTPUT ,PRCCLR ,RADFLG ,SDD ,SDDMIN , SECFLG ,SKW ,STBI ,   INPU  10
     , STSATI ,VELBI , VSFLG ,WNCI ,WSI ,XW ,VPSHI(100,6), VPSHIC(100) ,INPU  15
     ,  FDAVE ,ENHI ,ENHO ,ENHF ,WBI ,STBIP,ANTP,VELBIP,ADJF,IDENT(20), INPU  20
     , INSTM ,IFLOAT ,ITRAN ,IPNCH ,NRWSP ,NRWSCP ,NRWS ,NRWSC          INPU  25
      COMMON/INTEG/IHNO ,IHNOC ,ILNG ,ISEC , IVNO ,IVNOC ,J ,JGAS ,JRC ,INPU  30
     ,  IRENO ,IRENOC ,IDT ,IBT                                         INPU  35
      INTEGER GAS(5), GASA/'A'/, GASC/'C'/, GASM/'M'/                   INPU  40
      READ(5,10600,END=200) IR,IDENT                                    INPU  45
C*****                                                                  INPU  50
C       USE ONLY COLS 2-80 FOR IDENT                                    INPU  55
C       IR IN COL 1 OF IDENT CARD INDICATES ADDED NO. OF CARDS TO BE    INPU  60
C       READ BEGINNING WITH LAST CARD. (EXCEPT A 5 INDICATES NO MORE    INPU  65
C       CARDS WILL BE READ)   ANY OTHER FIGURE IN COL 1 CAUSES ALL      INPU  70
C       CARDS TO BE READ                                                INPU  75
C******                                                                 INPU  80
      GO TO (40,30,20,10,50),IR                                         INPU  85
   10 READ(5,10700) ANTP,PRCCLR,SDD,SDDMIN,OD,XW,SKW,NRWSP,NRWSCP       INPU  90
   20 READ(5,10900) WBI,VELBIP,CBI,STBIP,FOUL,ENHI                      INPU  95
   30 READ(5,10800) GAS,SECFLG,HFCDFL,RADFLG,BAFFLE,FDAVE,EXITFR,OUTPUT,INPU 100
     ,  INSTM,ITRAN,IFLOAT,IPNCH                                        INPU 105
   40 READ(5,10900) WSI,WNCI,STSATI,ALST,ENHO,ENHF                      INPU 110
   50 CONTINUE                                                          INPU 115
C******                                                                 INPU 120
C                       CONTROL FLAG INTERPRETATIONS                    INPU 125
C        OUTPUT = 1   GIVES FULL DETAIL OUTPUT                          INPU 130
C        OUTPUT = 0   GIVES SUMMARY OUTPUT ONLY                         INPU 135
C        ITRAN  = 1   ASSUMES INLET BRINE TEMPS EQUAL TO OUTLET FROM    INPU 140
C                     PREVIOUS STAGE                                    INPU 145
C        ITRAN  = 0   USES STBI FOR INLET BRINE TEMPS FOR ALL TUBES     INPU 150
C        NRWS   , 0   READS INLET BRINE TEMPS FROM CARDS                INPU 160
C        NRWS   = 0   WILL NOT READ CARDS                               INPU 165
C        IFLOAT = 1   FLOATING POINT OUTPUT                             INPU 170
C        IFLOAT = 0   FIXED POINT OUTPUT                                INPU 175
C        IPNCH  = 1   OUTLET BRINE TEMPS PUNCHED FOR INPUT TO NEXT STG  INPU 180
C        IPNCH  = 0   NO CARD OUTPUT                                    INPU 185
C        INSTM  = 1   CODE WILL USE INLET STEAM CONVERGENCE LOOP        INPU 187
C        INSTM  = 0   CODE WILL USE TUBE LENGTH CONVERGENCE LOOP        INPU 188
C*******                                                                INPU 190
      ANT = ANTP                                                        INPU 195
      VELBI = VELBIP                                                    INPU 200
      STBI = STBIP                                                      INPU 205
      NRWS = NRWSP                                                      INPU 210
      NRWSC = NRWSCP                                                    INPU 215
      JGAS = 0                                                          INPU 220
      DO 60 I=1,5                                                       INPU 225
         IF (GAS(I).EQ.GASA) JGAS = 1                                   INPU 230
         IF (GAS(I).EQ.GASC) JGAS = 2                                   INPU 235
         IF (GAS(I).EQ.GASM) JGAS = 3                                   INPU 240
         IF (JGAS.NE.0) GO TO 70                                        INPU 245
   60    CONTINUE                                                       INPU 250
      JGAS = 4                                                          INPU 255
   70 CONTINUE                                                          INPU 260
      ISEC = SECFLG                                                     INPU 265
      WRITE(6,11000)                                                    INPU 270
      WRITE(6,10000) IDENT                                              INPU 275
      WRITE(6,11100) ANT,PRCCLR,SDD,SDDMIN,OD,XW,SKW,NRWS,NRWSC         INPU 280
      WRITE(6,11300)WBI,VELBI,CBI,STBI,FOUL,ENHI                        INPU 285
      WRITE(6,11200)GAS,SECFLG,HFCDFL,RADFLG,BAFFLE,FDAVE,EXITFR,OUTPUT,INPU 290
```

```
     , INSTM,ITRAN,IFLOAT,IPNCH                                         INPU 295
      WRITE(6,11400) WSI,WNCI,STSAT1,ALST,ENHO,ENHF                     INPU 300
      IF (JGAS.NE.4) GO TO 80                                           INPU 305
      WRITE(6,11500)                                                    INPU 310
      JGAS = 1                                                          INPU 315
   80 CONTINUE                                                          INPU 320
      IF (NRWS.GT.0) GO TO 120                                          INPU 325
      IF (ITRAN.EQ.1) GO TO 150                                         INPU 330
      DO 100 J=1,ISEC                                                   INPU 335
         DO 90 I=1,100                                                  INPU 340
   90       VPSHI(I,J) = STBI                                           INPU 345
  100    CONTINUE                                                       INPU 350
      DO 110 I=1,100                                                    INPU 355
  110    VPSHIC(I) = STBI                                               INPU 360
      GO TO 180                                                         INPU 365
  120 DO 130 J=1,ISEC                                                   INPU 370
  130    READ(5,10900) (VPSHI(I,J),I=1,NRWS)                            INPU 375
      READ(5,10900)(VPSHIC(I),I=1,NRWSC)                                INPU 380
      JJ = NRWSC + 1                                                    INPU 385
      DO 140 I=JJ,100                                                   INPU 390
  140    VPSHIC(I) = VPSHIC(I-1)                                        INPU 395
  150 CONTINUE                                                          INPU 400
      WRITE(6,10400)                                                    INPU 405
      IF (NRWS.NE.0) GO TO 160                                          INPU 410
      NRWS = IHNO                                                       INPU 415
      NRWSC = IVNOC                                                     INPU 420
  160 IF (NRWSC.GE.NRWS) GO TO 170                                      INPU 425
      WRITE(6,10100) (I,(VPSHI(I,J),J=1,6),VPSHIC(I),I=1,NRWSC)         INPU 430
      N = NRWSC + 1                                                     INPU 435
      WRITE(6,10200) (I,(VPSHI(I,J),J=1,6),I=N,NRWS)                    INPU 440
      GO TO 180                                                         INPU 445
  170 WRITE(6,10100) (I,(VPSHI(I,J),J=1,6),VPSHIC(I),I=1,NRWS)          INPU 450
      IF (NRWS.EQ.NRWSC) GO TO 180                                      INPU 455
      N = NRWS + 1                                                      INPU 460
      WRITE(6,10300) (I,VPSHIC(I),I=N,NRWSC)                            INPU 465
  180 CONTINUE                                                          INPU 470
      WRITE(6,11600) IDENT                                              INPU 475
      WRITE(6,11700)                                                    INPU 480
      WRITE(6,11800) ANT ,OD ,WSI ,PRCCLR ,XW ,WBI ,ALST , SKW ,VELBI ,  INPU 485
     , SDD ,FDUL ,STSAT1 ,SDDMIN ,FDAVE ,STBI                           INPU 490
      WRITE(6,11900) RADFLG ,CBI ,SECFLG ,ENHI ,EXITFR ,BAFFLE , ENHO ,  INPU 495
     , WNCI ,HFCDFL ,ENHF                                               INPU 500
      IF (ITRAN.EQ.1) GO TO 190                                         INPU 505
      WRITE(6,10500)                                                    INPU 510
      RETURN                                                            INPU 515
  190 WRITE(6,10500)                                                    INPU 520
      ANT = ANT * ADJF / SECFLG                                         INPU 525
      RETURN 1                                                          INPU 530
  200 RETURN 2                                                          INPU 535
10000 FORMAT('0  CARD 1        CASE IDENTIFICATION AND NOTES'/ ' ',10X, INPU 540
     , 19A4,A3)                                                         INPU 545
10100 FORMAT(1H ,I4,7E15.6)                                             INPU 550
10200 FORMAT(1H ,I4,6E15.6)                                             INPU 555
10300 FORMAT(1H ,I4,T96,E15.6)                                          INPU 560
10400 FORMAT(1H0,30X,26HINLET  BRINE  TEMPERATURES/1H0,5H  ROW,7X,1H1,  INPU 565
     , 14X,1H2,14X,1H3,14X,1H4,14X,1H5,14X,1H6,11X,6HCOOLER)            INPU 570
10500 FORMAT('1')                                                       INPU 575
10600 FORMAT(I1,19A4,A3)                                                INPU 580
10700 FORMAT(7F10.0,2I5)                                                INPU 585
10800 FORMAT(5A1,7F5.2,4I5)                                             INPU 590
```

```
10900 FORMAT(8F10.3)                                                    INPU 595
11000 FORMAT(1H1,47X, 29HCIRCULAR CONDENSER INPUT DATA )                INPU 600
11100 FORMAT(1H0,'  CARD 2   ANT        PRCCLR    SDD        SDDMIN    OD INPU 605
     ,      XW        SKW        NRWS  NRWSC'/1H ,F16.0,F10.2,4F10.4,    INPU 610
     ,F8.2,2I8)                                                         INPU 615
11200 FORMAT(1H0,'  CARD 4   GAS      SECFLG  HFCOFL  RADFLG  BAFFLE  FDAINPU 620
     ,VE   EXITFR  OUTPUT  INSTM   ITRAN   IFLOAT  IPNCH'/              INPU 625
     ,1H ,11X,5A1,7F8.2,4I8)                                            INPU 630
11300 FORMAT(1H0,'  CARD 3   WBI        VELBI     CBI       STBI      FOUINPU 635
     ,L       ENHI'/1H ,7X,F10.0,F10.3,F10.5,F10.4,F10.5,F10.3)         INPU 640
11400 FORMAT(1H0,'  CARD 5   WSI        WNCI      STSAT1    ALST      ENHINPU 645
     ,O       ENHF'/1H ,6X,F10.0,F10.2,F10.3,F10.3,F10.3,F10.3)         INPU 650
11500 FORMAT(1H0,T41,'INERT GAS NOT SPECIFIED -- PROGRAM ASSUMES AIR')  INPU 655
11600 FORMAT(1H1, 35HCASE IDENTIFICATION AND NOTES ****  , 19A4,A3)     INPU 660
11700 FORMAT(1H0, 22HGEOMETRY SPECIFICATION ,9X,                        INPU 665
     , 20HTUBING SPECIFICATION ,25X,                                    INPU 670
     , 33HFLOW AND PROPERTIES SPECIFICATION )                           INPU 675
11800 FORMAT('0',T3,'NO. OF TUBES',F17.2, T36,'OUTSIDE DIAM., INCHES',  INPU 680
     , F19.4, T80,'STEAM FLOW, LBS/HR',F22.0/ 1X,T3 ,                   INPU 685
     , 'PCT. TUBES IN COOLER',F9.2, T36,'WALL THICKNESS, INCHES',F18.4, INPU 690
     , T80,'COOLANT FLOW, LBS/HR.',F19.0/ 1X,T3 ,'LENGTH OF TUBES, FT.',INPU 695
     ,  F9.2, T36,'WALL COND.,BTU/HR/SQ.F/DEG.F.'F11.4, T80,            INPU 700
     , 'COOLANT VELOCITY, FT/SEC.',F15.1/ 1X,T3 ,'S/D, CONDENSER',F15.3,INPU 705
     ,  T36,'FOULING FACTOR',F26.4, T80,'STEAM TEMP., DEG. F.',F20.2/   INPU 710
     , 1X,T3 ,'S/D COOLER',F19.3, T36,'TUBE FLOOD FACTOR(FDAVE)',F16.4, INPU 715
     , T80,'COOLANT TEMP., DEG. F.',F18.2)                              INPU 720
11900 FORMAT(' ',T3 ,'BUNDLE RADIUS FACTOR',F9.2, T36,                  INPU 725
     , 'ENHANCEMENT FACTORS', T80,'WT. FRAC. OF NACL IN COOLANT',F12.5/ INPU 730
     , 1X,T3 ,'SECTOR MODEL',F17.2, T38,'INSIDE FILM',F27.4, T80,       INPU 735
     , 'EXIT STEAM FRACTION,PCT. OF INPUT',F7.2/ 1X,T3 ,'BAFFLE FLAG',  INPU 740
     , F18.2, T38,'OUTSIDE FILM',F26.4, T80,                            INPU 745
     , 'NON-CONDENSIBLE FLOW, LB/HR.',F12.2/ 1X,T3,'SYM. FLAG',F20.2,   INPU 750
     , T38,'FRICTION FACTOR',F23.4)                                     INPU 755
      END                                                               INPU 760
```

```
      SUBROUTINE OUTP1(DELPC,VEL2,NERR)                                 OUTP   0
      COMMON/INPT/ ALST ,ANT ,BAFFLE ,HFCDFL, CBI ,EXITFR ,FOUL ,GAS ,  OUTP   5
     , DD , OUTPUT ,PRCCLR ,RADFLG ,SDO ,SDDMIN , SECFLG ,SKW ,STBI ,   OUTP  10
     , STSAT1 ,VELBI , VSFLG ,WNCI ,WSI ,XW ,VPSHI(100,6), VPSHIC(100) ,OUTP  15
     ,  FDAVE ,ENHI ,ENHO ,ENHF ,WBI ,STBIP,ANTP,VELBIP,ADJF,IDENT(20), OUTP  20
     , INSTM ,IFLOAT ,ITRAN ,IPNCH ,NRWSP ,NRWSCP ,NRWS ,NRWSC          OUTP  25
      COMMON/INTEG/IHNO ,IHNOC ,ILNG ,ISEC , IVNO ,IVNOC ,J ,JGAS ,JRC ,OUTP  30
     ,  IRENO ,IRENOC ,IDT ,IBT                                         OUTP  35
      COMMON AI ,AMLSEX ,AMOLNC ,AMWNC ,AO , ASS ,AW ,AXI ,BNDIAM ,COOR OUTP  40
     , (3), DELPVE ,GB ,HFG ,HNO ,HNOC , PMIX1 ,PMXEXT ,PSATEX ,RADINS ,OUTP  45
     ,  SDI , SDO ,SF ,SG ,SHWINV ,STBAVE , STB2ES ,STFO ,STSAEX ,TB2 , OUTP  50
     , TNO , TNOC ,TNOFR ,TSATEX ,VELEXT ,VG , VLCMAX ,VNO ,VNOC ,WB ,  OUTP  55
     , WNCC ,WSEXIT ,XNC , SMTBI, SMTB2, SMWB, SUMQ, SMTBIC, SMTB2C,    OUTP  60
     , SMWBC, SUMQC                                                     OUTP  65
      COMMON/DIM6/ C (6),DELP (6),WGAS (6),WP (6) ,WSP(6)               OUTP  70
      COMMON/DIM1/ALMTDC(100), GFLOWC(100),PMIXC (100),PSATC (100),RCC  OUTP  75
     , (100), SHIC (100),SHNFC (100),STSATC(100), UNC (100),VELC (100), OUTP  80
     , VNREC (100),VPSHC (100), VPSHHC(100),WCNDC (100),WSC (100),      OUTP  85
     , HEFFC(100) ,ROUTC(100) ,QOAC(100) , CUMDPC(100)                  OUTP  90
      COMMON/DIM16/ ALMTD (100,6) , ANF (100,6), GFLOW (100,6),PMIX     OUTP  95
     , (100,6), PSAT (100,6), RC (100,6),SHI (100,6), SHN (100,6),STSAT OUTP 100
     , (100,6), UN(100,6), VEL(100,6), VNRE(100,6), VPSH(100,6), VPSHH  OUTP 105
     , (100,6),WCND (100,6), WS (100,6) , HEFF(100,6) , ROUT(100,6) ,   OUTP 110
     , QOA(100,6) ,CUMDP(100,6),AOTFLW (100), RADIUS (100), TBNPR (100) OUTP 115
      INTEGER GAS(5)                                                    OUTP 120
      IF (NERR.EQ.0.AND.ASS.EQ.0.) GO TO 10                             OUTP 125
      GO TO 110                                                         OUTP 130
   10 CONTINUE                                                          OUTP 135
      IF (PRCCLR.GT.0.0) GO TO 20                                       OUTP 140
      WSC(1) = WSEXIT                                                   OUTP 145
      ARCOOL = 0.0                                                      OUTP 150
      AVTBIC = 0.0                                                      OUTP 155
      AVTB2C = 0.0                                                      OUTP 160
      QTCOOL = 0.0                                                      OUTP 165
      STB2CL = 0.0                                                      OUTP 170
      DTCOL2 = 0.0                                                      OUTP 175
      UPCOOL = 0.0                                                      OUTP 180
      DLTOT2 = 0.0                                                      OUTP 185
      UPAVG = 0.0                                                       OUTP 190
      ADTCLR = 0.0                                                      OUTP 195
      ADTCND = 0.0                                                      OUTP 200
      VPSHWC = 0.0                                                      OUTP 205
      DELPC = 0.0                                                       OUTP 210
      TDROP2 = 0.0                                                      OUTP 215
      HBNDC = 0.0                                                       OUTP 220
      WBNDC = 0.0                                                       OUTP 225
      WCNDCT = 0.0                                                      OUTP 230
      IVNOC = 0                                                         OUTP 235
   20 CONTINUE                                                          OUTP 240
      WBI = WBI / ADJF * SECFLG                                         OUTP 245
      ANT = ANT / ADJF * SECFLG                                         OUTP 250
      ARCOND = AO * TNO                                                 OUTP 260
      WCNDT=WSI-WSC(1)                                                  OUTP 265
      QTCOND = SUMQ * (1.0 + HFCDFL)                                    OUTP 270
      AVTB2 = SMTB2 / SMWB                                              OUTP 275
      AVTBI = SMTBI / SMWB                                              OUTP 280
      AVTBIT = (SMTBI + SMTBIC) / (SMWB + SMWBC)                        OUTP 285
      AVTB2T = (SMTB2 + SMTB2C) / (SMWB + SMWBC)                        OUTP 290
      IF (VELBI.NE.0.) GO TO 30                                         OUTP 295
      VELBI = WBI / (3600. * ( ANT ) * AXI * ROEFN(CBI,AVTBIT))         OUTP 300
```

```
   30 CONTINUE                                                          OUTP 305
      DTCND2 = (AVTB2 - AVTBI) / ALOG((STSAT1 - AVTBI) / (STSAT1 -      OUTP 310
     , AVTB2))                                                          OUTP 315
      UPCOND = QTCOND / (ARCCND * DTCND2)                               OUTP 320
      IF (PRCCLR.EQ.0.0) GO TO 40                                       OUTP 325
      AVTBIC = SMTBIC / SMWBC                                           OUTP 330
      AVTB2C = SMTB2C / SMWBC                                           OUTP 335
      ARCOOL=AO*TNOC                                                    OUTP 340
      WCNDCT=WSC(1)-WSC(IVNOC+1)                                        OUTP 345
      QTCOOL = SUMQC                                                    OUTP 350
      DTCOL2 = (AVTB2C - AVTBIC) / ALOG((STSAEX - AVTBIC) / (STSAEX -   OUTP 355
     , AVTB2C))                                                         OUTP 360
      UPCOOL = QTCOOL / (ARCOOL * DTCOL2 )                              OUTP 365
      DLTOT2 = (AVTB2T - AVTBIT)/ ALOG((STSAT1 - AVTBIT) / (STSAT1 -    OUTP 370
     , AVTB2T))                                                         OUTP 375
      UPAVG = (QTCOND + QTCOOL) / (AO * ANT * DLTOT2)                   OUTP 380
   40 CONTINUE                                                          OUTP 385
      VNOC = FLOAT(IVNOC)                                               OUTP 390
      UBARW = 0.0                                                       OUTP 395
      UBARWC = 0.0                                                      OUTP 400
      VPSHW = 0.0                                                       OUTP 405
      VPSHWC = 0.0                                                      OUTP 410
      VEL3 = 0.0                                                        OUTP 415
      DO 60 J=1,ISEC                                                    OUTP 420
         DO 50 I=1,IHNO                                                 OUTP 425
   50       UBARW = UBARW + UN(I,J) * TBNPR(I) * (1.0 + HFCDFL)         OUTP 430
         VEL3 = VEL3 + VEL(IHNO,J)                                      OUTP 435
   60    CONTINUE                                                       OUTP 440
      UBARW = UBARW/TNO                                                 OUTP 445
      VEL3 = VEL3 / SECFLG                                              OUTP 450
      IF (PRCCLR.EQ.0.0) GO TO 80                                       OUTP 455
      DO 70 I=1,IVNOC                                                   OUTP 460
   70    UBARWC = UBARWC + UNC(I)                                       OUTP 465
      UBARWC = UBARWC/VNOC                                              OUTP 470
      ADTCLR = QTCOOL/(UBARWC*ARCOOL)                                   OUTP 475
   80 CONTINUE                                                          OUTP 480
      UAVGW =(UBARW*TNO + UBARWC*TNOC)/ ANT                             OUTP 485
      ADTCND = QTCOND/(UBARW*AO*TNO)                                    OUTP 490
      ADTOA = (QTCOOL+QTCOND)/(UAVGW*ANT*AO)                            OUTP 495
C  REGULAR OUTPUT PKG                                                   OUTP 500
      TNOFR = TNOC/(TNOC+TNO)*100.                                      OUTP 505
      TDROP1 = STSAT(1,1) - STSAEX                                      OUTP 510
      THOFR = TNO/(TNO + TNOC) *100.0                                   OUTP 515
      VOIDID = 2.0*RADINS                                               OUTP 520
      HNO = FLOAT(IHNO)                                                 OUTP 525
      IF (PRCCLR.EQ.0.0) GO TO 90                                       OUTP 530
      TDROP2 = STSATC(1) - STSATC(IVNOC+1)                              OUTP 535
      DELPOA = PMIX1 - PMIXC(IVNOC+1)                                   OUTP 540
      TDROP3 = STSAT1 - STSATC(IVNOC+1)                                 OUTP 545
      HBNDC = 0.866*VNOC*SDDMIN*SDO + SDO                               OUTP 550
      WBNDC = HNOC*SDDMIN*SDO + SDO                                     OUTP 555
      EXSTFR = WSC(IVNOC+1)/WSI * 100.0                                 OUTP 560
      EXNCFR= WNCI/(WNCI+WSC(IVNOC+1))*100.0                            OUTP 565
   90 CONTINUE                                                          OUTP 570
      IF (PRCCLR.GT.0.0) GO TO 100                                      OUTP 575
      EXSTFR = WSEXIT / WSI * 100.                                      OUTP 580
      EXNCFR = WNCI / (WNCI + WSEXIT) * 100.                            OUTP 585
      DELPOA = PMIX1 - PMXEXT                                           OUTP 590
      TDROP3 = STSAT1 - STSAEX                                          OUTP 595
  100 CONTINUE                                                          OUTP 600
```

```
      ARTOT = ARCOND + ARCOOL                                           OUTP 605
      QTOTAL = QTCOND + QTCOOL                                          OUTP 610
C     CONVERT Q TO MEGA BTU S                                           OUTP 615
      QTCOND = QTCOND / 1.E06                                           OUTP 620
      QTCOOL = QTCOOL / 1.E06                                           OUTP 625
      QTOTAL = QTOTAL / 1.E06                                           OUTP 630
      WRITE(6,10100) IDENT                                              OUTP 635
      WRITE(6,10200)                                                    OUTP 640
      WRITE(6,10300) UBARW, ADTCND, DELPVE, TDROP1, VEL2 , VEL3 , SDD,  OUTP 645
     , THOFR,QTCOND,ARCOND,UBARWC, ADTCLR, DELPC, TDROP2, VELC(1),      OUTP 650
     , VELC(IVNOC) ,SDDMIN,TNOFR,QTCOOL,ARCOOL, UAVGW, ADTOA, DELPOA,   OUTP 655
     , TDROP3, QTOTAL, ARTOT                                            OUTP 660
      WRITE(6,10400) BNDIAM, VOIDID, HNO                                OUTP 665
      WRITE(6,10500) HBNDC, WBNDC, ALST, EXSTFR, EXNCFR                 OUTP 670
      WRITE(6,10600)                                                    OUTP 675
      WRITE(6,10700) AVTBI,AVTB2,WSI,AVTBIC,AVTB2C,WBI,AVTBIT,AVTB2T,   OUTP 680
     , VELBI,WCNDT,WCNDCT                                               OUTP 685
      WRITE(6,10800) DTCND2,UPCOND, DTCOL2, UPCOOL, DLTOT2, UPAVG       OUTP 690
      IF (OUTPUT.EQ.0.) GO TO 150                                       OUTP 695
C  FULL OUTPUT PKG                                                      OUTP 700
  110 CONTINUE                                                          OUTP 705
      DO 140 J=1,ISEC                                                   OUTP 710
         WRITE(6,11800) IDENT, J                                        OUTP 715
         WRITE(6,11700)                                                 OUTP 720
         IF (IFLOAT.EQ.0) GO TO 120                                     OUTP 725
         WRITE(6,11200)(I,STSAT(I,J),PMIX(I,J),WS(I,J),VEL(I,J),RC(I,J),OUTP 730
     ,     UN(I,J),SHN (I,J),SHI(I,J),ROUT(I,J),I=1,IHNO)               OUTP 735
         WRITE(6,12000) STSAT(IHNO+1,J),PMIX(IHNO+1,J),WS(IHNO+1,J)     OUTP 740
         WRITE(6,10900)                                                 OUTP 745
         WRITE(6,11000)(I,VNRE(I,J),QOA(I,J),VPSH(I,J),GFLOW(I,J),      OUTP 750
     ,    VPSHI(I,J),VPSHH(I,J),HEFF(I,J),TBNPR(I),CUMDP(I,J),I=1,IHNO) OUTP 755
         IF (PRCCLR.EQ.0.0.OR.J.LT.ISEC) GO TO 140                      OUTP 760
         WRITE(6,11500) IDENT                                           OUTP 765
         WRITE(6,11600)                                                 OUTP 770
         WRITE(6,11200)(I,STSATC(I),PMIXC(I),WSC(I),VELC(I),RCC(I),     OUTP 775
     ,    UNC(I), SHNFC(I),SHIC(I),ROUTC(I),I=1,IVNOC)                  OUTP 780
         WRITE(6,12000) STSATC(IVNOC+1),PMIXC(IVNOC+1),WSC(IVNOC+1)     OUTP 785
         WRITE(6,11100)                                                 OUTP 790
         WRITE(6,11200)(I,VNREC(I),QOAC(I),VPSHC(I),GFLOWC(I),VPSHIC(I),OUTP 795
     ,     VPSHHC(I),HEFFC(I),HNOC , CUMDPC(I),I=1,IVNOC)               OUTP 800
         GO TO 130                                                      OUTP 805
  120    CONTINUE                                                       OUTP 810
         WRITE(6,11400)(I,STSAT(I,J),PMIX(I,J),WS(I,J),VEL(I,J),RC(I,J),OUTP 815
     ,     UN(I,J),SHN (I,J),SHI(I,J),ROUT(I,J),I=1,IHNO)               OUTP 820
         WRITE(6,12100) STSAT(IHNO+1,J),PMIX(IHNO+1,J),WS(IHNO+1,J)     OUTP 825
         WRITE(6,10900)                                                 OUTP 830
         WRITE(6,11300)(I,VNRE(I,J),QOA(I,J),VPSH(I,J),GFLOW(I,J),      OUTP 835
     ,    VPSHI(I,J),VPSHH(I,J),HEFF(I,J),TBNPR(I),CUMDP(I,J),I=1,IHNO) OUTP 840
         IF (PRCCLR.EQ.0.0.OR.J.LT.ISEC) GO TO 140                      OUTP 845
         WRITE(6,11500) IDENT                                           OUTP 850
         WRITE(6,11600)                                                 OUTP 855
         WRITE(6,11400)(I,STSATC(I),PMIXC(I),WSC(I),VELC(I),RCC(I),     OUTP 860
     ,    UNC(I), SHNFC(I),SHIC(I),ROUTC(I),I=1,IVNOC)                  OUTP 865
         WRITE(6,12100) STSATC(IVNOC+1),PMIXC(IVNOC+1),WSC(IVNOC+1)     OUTP 870
         WRITE(6,11100)                                                 OUTP 875
         WRITE(6,11300)(I,VNREC(I),QOAC(I),VPSHC(I),GFLOWC(I),VPSHIC(I),OUTP 880
     ,     VPSHHC(I),HEFFC(I),HNOC , CUMDPC(I),I=1,IVNOC)               OUTP 885
  130    CONTINUE                                                       OUTP 890
  140    CONTINUE                                                       OUTP 895
  150 CONTINUE                                                          OUTP 900
```

```
      DO 170 J=1,ISEC                                                   OUTP 905
         DO 160 I=1,IHNO                                                OUTP 910
  160       VPSHI(I,J) = VPSHH(I,J)                                     OUTP 915
  170    CONTINUE                                                       OUTP 920
      DO 180 I=1,IVNOC                                                  OUTP 925
  180    VPSHIC(I) = VPSHHC(I)                                          OUTP 930
      IF (IPNCH.EQ.0) GO TO 200                                         OUTP 935
      DO 190 J=1,ISEC                                                   OUTP 940
  190    WRITE(7,11900) (VPSHH(I,J),I=1,IHNO)                           OUTP 945
      WRITE(7,11900) (VPSHHC(I),I=1,IVNOC)                              OUTP 950
  200 CONTINUE                                                          OUTP 955
      RETURN                                                            OUTP 960
10100 FORMAT('1',19A4,A3)                                               OUTP 970
10200 FORMAT(1H0,52X, 18HSUMMARY OF RESULTS /1H ,11X, 24HAREA AVERAGE  BOUTP 975
     ,ACK CALC. ,68X, 16HHEAT   HEAT TRF.   /1H ,16X, 2HU,8X, 8HLOG MEANOUTP 980
     , ,4X, 33HPRESSURE   TEMP.   STEAM VELOCITY ,            47H  TUBE OUTP 985
     ,SPACING  TUBE FRACTION REMOVED, SURFACE,                          OUTP 990
     ,                        /12X, 56HBTU/HR/SQ.FT. DELTA TEMP,    DROP OUTP 995
     ,    DROP         FT/SEC , 8X, 6HRATIO, 20X, 7HMILLION /14X, 58H/DEGOUTP1000
     ,. F.      DEG.F.    LBS/SQ.IN.  DEG.F.  INLET   OUTLET ,          OUTP1005
     ,   6X,  41HS/D        PERCENT       BTU/HR   SQ.FT.   )           OUTP1010
10300 FORMAT(1H0, 11HCONDENSER   , F8.2,6X,F8.4,5X,F7.4,3X,F7.4,1X,F6.2,OUTP1015
     ,  2X,F6.2, 7X,F5.3,6X,F6.2,6X,F9.4,F9.2 /1X, 6HCOOLER ,5X,F8.2,6X,OUTP1020
     ,  F8.4,5X,F7.4,3X,F7.4,1X,F6.2,2X,F6.2, 7X,F5.3,6X,F6.2,7X,F8.4,  OUTP1025
     , F9.2/1X, 7HOVERALL ,4X,F8.2,6X,F8.4,5X,F7.4,3X,F7.4,45X,F9.4,    OUTP1030
     , F9.2 )                                                           OUTP1035
10400 FORMAT(1H0, 25HOUTSIDE BUNDLE DIAM., FT. , F6.2,4X,               OUTP1040
     , 22HINSIDE VOID DIAM., FT. , F6.2,4X,                             OUTP1045
     , 26HNUMBER OF RADIAL TUBE ROWS , F4.0 )                           OUTP1050
10500 FORMAT(1H0, 18HCOOLER HEIGHT, FT. ,F6.2,5X,17HCOOLER WIDTH, FT. , OUTP1055
     , F6.2,5X, 18HBUNDLE LENGTH, FT. ,F7.3/1H0,                        OUTP1060
     , 28HEXIT STEAM, PERCENT OF INPUT ,5X,F6.2,9X,                     OUTP1065
     , 49HEXIT NON-CONDENSIBLES, PERCENT OF TOTAL EXIT FLOW ,5X, F6.2 ) OUTP1070
10600 FORMAT('0',T16,'AVG. BRINE TEMPS',T70,'FLOWS' /' 'T15,            OUTP1075
     , 'ENTRANCE      EXIT',T70,'LBS/HR')                               OUTP1080
10700 FORMAT('0',T2,'CONDENSER' 2F12.4,T52,'STEAM TO CONDENSER',F17.0 / OUTP1085
     , ' ' ,T2,'COOLER    ' 2F12.4,T52,'COOLANT TO BUNDLE',F18.0 /' ' ,OUTP1090
     , T2,'OVERALL  '2F12.4,T52,'COOLANT VELOCITY',F15.4,' F/S' /' ',   OUTP1095
     , T52,'CONDENSATE FROM CONDENSER',F10.0 /' ',T52,                  OUTP1100
     , 'CONDENSATE FROM COOLER',F13.0)                                  OUTP1105
10800 FORMAT(1H0, '   DTCND2 ','   UPCOND ','   DTCCL2 ','   UPCOOL ', OUTP1110
     , '   DLTOT2 ','    UPAVG ', /' ', 6F10.4)                         OUTP1115
10900 FORMAT(1H1, 7X, 6H RENOS, 5X,9HHEAT FLUX,6X, 6H   SF , 7X,        OUTP1120
     , 6H GFLOW , 7X ,6H  TB1  , 7X,6H  TB2  , 7X,6H HEFF , 7X,5HTBNPR, OUTP1125
     , 6X,8HCUM DELP)                                                   OUTP1130
11000 FORMAT(1H ,I3,1P9E13.4)                                           OUTP1135
11100 FORMAT(1H0, 8X, 6HRENOSC, 5X,9HHEAT FLUX,6X, 6H  SFC , 7X,        OUTP1140
     , 6HGFLOWC , 7X,6H  TB1  , 7X,6H  TB2 , 7X,6HHEFFC , 7X,5HTBNPR,   OUTP1145
     , 6X,8HCUM DELP)                                                   OUTP1150
11200 FORMAT(1H ,I3,1P9E13.4)                                           OUTP1155
11300 FORMAT(1H ,I3,F11.0,F12.0,F14.4,F13.3,2F13.2,1PE15.5,0PF9.2,F13.4)OUTP1160
11400 FORMAT(1H ,I3,F10.2,F12.4,F13.1,F12.1,F14.4,F12.0,F15.0,F12.0,    OUTP1165
     , F14.0)                                                           OUTP1170
11500 FORMAT(1H1,19A4,A3,17H   COOLER SECTION )                         OUTP1175
11600 FORMAT(1H0,8X,6HSTSATC, 7X,5HPMIXC, 8X,3HWSC,10X,4HVELC, 9X,3HRCC,OUTP1180
     ,  10X,3HUNC,10X,5HSHNFC, 8X,4HSHIC,8X,7H1/ROUTC)                  OUTP1185
11700 FORMAT(1H0,8X,5HSTSAT, 8X,4HPMIX, 9X,2HWS,11X,3HVEL,10X,2HRC,11X, OUTP1190
     , 2HUN,11X,4HSHNF, 9X,3HSHI,9X,6H1/ROUT)                           OUTP1195
11800 FORMAT(1H1,19A4,A3,'  J = ',I2)                                   OUTP1200
11900 FORMAT(8F10.6)                                                    OUTP1205
12000 FORMAT(1H ,3X,1P3E13.4)                                           OUTP1210
12100 FORMAT(1H ,3X,F10.2,F12.4,F13.1)                                  OUTP1215
      END                                                               OUTP1220
```

```
      SUBROUTINE SECALC(AMOLSS,AMOLST,DELP12,DELP23,SVMIX1,NERR)
      COMMON/INPT/ ALST ,ANT ,BAFFLE ,HFCDFL, CBI ,EXITFR ,FOUL ,GAS ,
     , OD , OUTPUT ,PRCCLR ,RADFLG ,SDD ,SDDMIN , SECFLG ,SKW ,STBI ,
     , STSAT1 ,VELBI , VSFLG ,WNCI ,WSI ,XW ,VPSHI(100,6), VPSHIC(100) ,
     ,  FDAVE ,ENHI ,ENHO ,ENHF ,WBI ,STBIP,ANTP,VELBIP,ADJF,IDENT(20),
     , INSTM ,IFLOAT ,ITRAN ,IPNCH ,NRWSP ,NRWSCP ,NRWS ,NRWSC
      COMMON/INTEG/IHNO ,IHNOC ,ILNG ,ISEC , IVNO ,IVNOC ,J ,JGAS ,JRC ,
     ,  IRENO ,IRENOC ,IDT ,IBT
      COMMON AI ,AMLSEX ,AMOLNC ,AMWNC ,AO , ASS ,AW ,AXI ,BNDIAM ,CDOR
     , (3), DELPVE ,GB ,HFG ,HNO ,HNOC , PMIX1 ,PMXEXT ,PSATEX ,RADINS ,
     ,  SDI , SDO ,SF ,SG ,SHWINV ,STBAVE , STB2ES ,STFO ,STSAEX ,TB2 ,
     , TNO , TNOC ,TNOFR ,TSATEX ,VELEXT ,VG , VLCMAX ,VNO ,VNOC ,WB ,
     , WNCC ,WSEXIT ,XNC , SMTBI, SMTB2, SMWB, SUMQ, SMTBIC, SMTB2C,
     , SMWBC, SUMQC
      COMMON/DIM6/ C (6),DELP (6),WGAS (6),WP (6) ,WSP(6)
      COMMON/DIM1/ALMTDC(100), GFLOWC(100),PMIXC (100),PSATC (100),RCC
     , (100), SHIC (100),SHNFC (100),STSATC(100), UNC (100),VELC (100),
     , VNREC (100),VPSHC (100), VPSHHC(100),WCNDC (100),WSC (100),
     , HEFFC(100) ,ROUTC(100) ,QOAC(100) , CUMDPC(100)
      COMMON/DIM16/ ALMTD (100,6) , ANF (100,6), GFLOW (100,6),PMIX
     , (100,6), PSAT (100,6), RC (100,6),SHI (100,6), SHN (100,6),STSAT
     , (100,6) ,UN (100,6), VEL (100,6),VNRE (100,6) ,VPSH (100,6),
     , VPSHH (100,6),WCND (100,6), WS (100,6) , HEFF(100,6) , ROUT(100,
     , 6) ,QOA(100,6) ,CUMDP(100,6),AOTFLW (100), RADIUS (100), TBNPR
     , (100)
      INTEGER GAS(5)
      WSAVE = (WNCI + WSI)/12.0
      SSAVE = WSI/12.0
      IST = 0
C     FOR THE FIRST PASS THROUGH THE CONDENSER , (J=1)
C     SET UP FOR CALCULATION THRU CONDENSER USE DOUBLE SUBSCRIPTS, (I,J)
CCCCCC
C     I---TUBE ROWS, 1 TO IHNO
C     J---PASS NO  , 1 TO 6
      IPLOOP=0
      II = 1
   10 CONTINUE
      SMTBI = 0.0
      SMWB = 0.0
      SMTB2 = 0.0
      SUMQ = 0.0
      DO 230 J=1,ISEC
         DELP(J) = 0.
         PMIX(1,J) = PMIX1 - DELP12 - DELP23
         PSAT(1,J)=PMIX(1,J)*(AMOLSS/AMOLST)
         PAL=PSAT(1,J)
         TAL = TSATFN(PAL)
         STSAT(1,J) = TAL - 459.69
         VG=VGFN(TAL,PMIX(1,J))
         VNC=(10.729 * TAL) / (AMWNC * PMIX(1,J))
         VMIX=1.0/((AMOLSS/(VG*AMOLST))+(AMOLNC/(VNC*AMOLST)))
         VEL (1, J) = ( WS (1,J) + WGAS (J) ) * VMIX / (3600.0*
     ,    AOTFLW(1))
         IF (WNCI) 20,20,30
   20    WGAS(J) = 0.0
   30    WNC = WGAS(J)
         AMOLSC=WNC/AMWNC
         TB2 = STB2ES
         IROW = 0
         ASS = 0.0
```

```
      DO 210IL=1,IHNO                                                   SECA 300
         I=IL                                                           SECA 305
         IJX = 0                                                        SECA 310
         LQ=0                                                           SECA 315
         AXO = AOTFLW(I)                                                SECA 320
         L = J                                                          SECA 325
         STBI = VPSHI(I,J)                                              SECA 330
         IF (STBI.LT.STBIP) STBI = STBIP                                SECA 335
         CALL HETTRN(STSAT(I,J),ANF(I,J),WS(I,J),WNC,UN(I,J),ALMTD(I,SECA 340
     ,     J), SHI(I,J),SHN(I,J),RC(I,J),ROUT(I,J) ,AXO, VNRE(I,J),   SECA 345
     ,     DUMMY , VPSHH(I,J),HEFF(I,J),L,II,I)                         SECA 350
         IF (ASS.NE.0.) GO TO 190                                       SECA 355
         HFG=HFGFN(STSAT(I,J))                                          SECA 360
         WCND(I,J)=UN(I,J)*AO*ALMTD(I,J)/HFG * TBNPR (I)                SECA 365
         CALL PRSDRP(TAL ,VMIX,WS(I,J),WNC,AXO,SDO,VPSH(I,J), DELPTP SECA 370
     ,     ,ENHF)                                                       SECA 375
         JX=0                                                           SECA 380
   40    WS(I+1,J)= WS(I,J)-WCND(I,J)                                   SECA 385
         GFLOW(I,J) = (WS(I,J)+WNC)/ AKO                                SECA 390
         IF (I.GT.1) GO TO 50                                           SECA 395
         IF (WS(I+1,J)) 60,60,90                                        SECA 400
C     IF IROW.EQ.1 PRGRM IS FORCING A DECREASING COND. RATE             SECA 405
   50    IF (IROW.EQ.1) GO TO 60                                        SECA 410
C     IF PREVIOUS COND. RATE PREDICTS STEAM FLOW WILL GO NEG. AFTER THE SECA 415
C     NEXT ROW, SET CONDENSATE TO ONE-HALF  OF STEAM FLOW.              SECA 420
         IF (WS(I-1,J)-2.0*WCND(I-1,J)) 60,60,90                        SECA 425
   60    WCND(I,J) = WS(I,J) / 2.                                       SECA 430
         IROW = 1                                                       SECA 435
   70    CONTINUE                                                       SECA 440
         WS(I+1,J)= WS(I,J)-WCND(I,J)                                   SECA 445
         AMOLS = WS(I+1,J) / 18.015                                     SECA 450
         PMIX(I+1,J)=PMIX(I,J)-DELPTP                                   SECA 455
         PSAT(I+1,J)=PMIX(I+1,J)*AMOLS / (AMOLS + WNC / AMWNC)          SECA 460
         TSAT = TSATFN(PSAT(I+1,J))                                     SECA 465
         STSAT(I+1,J) = TSAT - 459.69                                   SECA 470
         IF (STSAT(I+1,J).LE.STBI) GO TO 80                             SECA 475
         ALMTD(I,J) = WCND(I,J) *HFG/(UN(I,J)*AO * TBNPR (I) )          SECA 480
         GO TO 180                                                      SECA 485
   80    WCND(I,J) = 0.0                                                SECA 490
         IJX = IJX + 1                                                  SECA 495
         IF (IJX.LT.3) GO TO 70                                         SECA 500
         IF (IST.EQ.0) WRITE(6,10300) STSAT(I+1,J),IL,J                 SECA 505
         IST = 1                                                        SECA 510
         GO TO 190                                                      SECA 515
   90    AMOLS = WS(I+1,J) / 18.015                                     SECA 520
         PMIX(I+1,J)=PMIX(I,J)-DELPTP                                   SECA 525
         PSAT(I+1,J)=PMIX(I+1,J)*AMOLS / (AMOLS + WNC / AMWNC)          SECA 530
         PAL=PSAT(I+1,J)                                                SECA 535
         IF (PAL) 100,100,110                                           SECA 540
  100    WRITE(6,10000) I,J,PMIX(I+1,J),WS(I+1,J)                       SECA 545
         GO TO 190                                                      SECA 550
  110    TSAT = TSATFN(PAL)                                             SECA 555
         STSAT(I+1,J) = TSAT - 459.69                                   SECA 560
         IF (STSAT(I+1,J)-STFO) 120,120,130                             SECA 565
  120    STSAT(I+1,J) = STFO                                            SECA 570
         TSAT = STSAT(I+1,J) + 459.69                                   SECA 575
  130    CONTINUE                                                       SECA 580
         WCNDP=(UN(I,J)*AO*ALMTD(I,J) * TBNPR (I) - (WS(I,J) *          SECA 585
     ,     CPSFN(TSAT) / 18.015 + WNC * CPAFN(TSAT,JGAS) / AMWNC ) *    SECA 590
     ,     (TAL - TSAT)) / HFG                                          SECA 595
```

```
      IF (ABS(WCNDP/WCND(I,J)-1.0)-.005) 170,140,140                    SECA 600
140   JX=JX+1                                                           SECA 605
      IF (JX-50) 160,160,150                                            SECA 610
150   WRITE(6,10100)IDENT,I,J,I,J                                       SECA 615
      GO TO 360                                                         SECA 620
160   WCND(I,J)=WCNDP                                                   SECA 625
      GO TO 40                                                          SECA 630
170   CONTINUE                                                          SECA 635
      WCND(I,J) = WCNDP                                                 SECA 640
      WS(I+1,J)= WS(I,J)-WCND(I,J)                                      SECA 645
      AMOLS = WS(I+1,J) / 18.015                                        SECA 650
      PSAT(I+1,J)=PMIX(I+1,J)*AMOLS / (AMOLS + WNC / AMWNC)             SECA 655
      TSAT = TSATFN(PSAT(I+1,J))                                        SECA 660
      STSAT(I+1,J) = TSAT - 459.69                                      SECA 665
180   VG=VGFN(TSAT ,PMIX(I+1,J))                                        SECA 670
      AMOLSC = WNC/AMWNC                                                SECA 675
      VNC = (10.729 * TSAT ) / (AMWNC * PMIX(I+1,J))                    SECA 680
      VMIX=1.0/((AMOLS /(VG*(AMOLS +AMOLSC)))+(AMOLSC/ (VNC*            SECA 685
     ,  (AMOLS +AMOLSC))))                                              SECA 690
      VEL(I+1,J)=(WS(I+1,J)+WNC)/(AOTFLW (I+1) )*VMIX/3600.0            SECA 695
      SMTBI = SMTBI + WB * STBI * TBNPR(I)                              SECA 700
      SMWB = SMWB + WB * TBNPR(I)                                       SECA 705
      SMTB2 = SMTB2 + WB * TBNPR(I) * TB2                               SECA 710
      SUMQ = SUMQ + UN(I,J) * AO * ALMTD(I,J) * TBNPR(I)                SECA 715
      QOA(I,J) = UN(I,J) * ALMTD(I,J)                                   SECA 720
      CUMDP(I,J) = (PMIX1*27.7) - 27.7*PMIX(I+1,J)                      SECA 725
      DELP(J) = DELP(J) + DELPTP                                        SECA 730
      TAL = TSAT                                                        SECA 735
      GO TO 210                                                         SECA 740
190   ASS = 0.0                                                         SECA 745
      DO 200 IT=I,IHNO                                                  SECA 750
         UN(IT,J) = UN(IT-1,J)                                          SECA 755
200      WS(IT,J) = WS(IT-1,J)                                          SECA 760
      WS(IHNO+1,J) = WS(IHNO,J)                                         SECA 765
      GO TO 220                                                         SECA 770
210   CONTINUE                                                          SECA 775
220 CONTINUE                                                            SECA 780
    VEL(1,J)=SVMIX1*(WS(1,J)+WGAS(J))/(3600.0*AOTFLW(1) )               SECA 785
    C(J) = (WS(1,J) + WGAS(J)) / SQRT(DELP(J))                          SECA 790
230 CONTINUE                                                            SECA 795
  PMXEXT=0.0                                                            SECA 800
  DELPVE = 0.                                                           SECA 805
  DO 240 J=1,ISEC                                                       SECA 810
     DELPVE = DELPVE + DELP(J)                                          SECA 815
240  PMXEXT=PMXEXT+PMIX(IHNO+1,J)                                       SECA 820
  PMXEXT = PMXEXT/SECFLG                                                SECA 825
  DELPVE = DELPVE / SECFLG                                              SECA 830
  TNOFR = TNOC / (TNOC + TNO/ADJF * SECFLG) * 100.0                     SECA 835
  DO 260 J=1,ISEC                                                       SECA 840
     IF (ABS(DELP(J)/DELPVE-1.0)-0.01) 260,260,250                      SECA 845
250  IF (ABS(DELPVE).GT.0.001) GO TO 270                                SECA 850
260  CONTINUE                                                           SECA 855
  GO TO 370                                                             SECA 860
270 CONTINUE                                                            SECA 865
  DLPVES = DELPVE                                                       SECA 870
  CONSM = 0.0                                                           SECA 875
  WNCFR = WNCI /(WNCI + WSI)                                            SECA 880
  DO 280 J=1,ISEC                                                       SECA 885
     CONSM = CONSM + C(J)                                               SECA 890
280  CONTINUE                                                           SECA 895
```

```
      DELPVE = (WSAVE*SECFLG)**2 / CONSM**2                             SECA 900
      DELPVE = (DELPVE + DLPVES) / 2.0                                  SECA 905
      DMAX = ABS(DELPVE - DELP(1))                                      SECA 910
      JMAX = 1                                                          SECA 915
      DO 290 J=2,ISEC                                                   SECA 920
         DHOLD = ABS(DELPVE - DELP(J))                                  SECA 925
         IF (DHOLD.LE.DMAX) GO TO 290                                   SECA 930
         DMAX = DHOLD                                                   SECA 935
         JMAX = J                                                       SECA 940
  290    CONTINUE                                                       SECA 945
      WSPT = 0.0                                                        SECA 950
      WPT=0.0                                                           SECA 955
      DO 310 J=1,ISEC                                                   SECA 960
         WP(J) = C(J) * SQRT(DELPVE)                                    SECA 965
         WSP(J)=WP(J)*WSI/(WNCI+WSI)                                    SECA 970
         IF (J.EQ.JMAX) GO TO 310                                       SECA 975
         FAC = WSP(J) - WS(1,J)                                         SECA 980
         AFAC = ABS(FAC)                                                SECA 985
         IF (AFAC.LT.1.E-3) GO TO 300                                   SECA 990
         CHGSC = 0.5 * WS(1,J)**0.26                                    SECA 995
         IF (IPLOOP.GT.3) CHGSC = CHGSC/IPLOOP * 2.0                    SECA1000
         WSP(J) = WS(1,J) + FAC/AFAC * SQRT(AFAC) * CHGSC               SECA1005
  300    CONTINUE                                                       SECA1010
         WSPT = WSPT + WSP(J)                                           SECA1015
         WGAS(J) = WSP(J) * WNCFR                                       SECA1020
         WP(J) = WSP(J) + WGAS(J)                                       SECA1025
         WPT = WPT + WP(J)                                              SECA1030
  310    CONTINUE                                                       SECA1035
      WSP(JMAX) = SSAVE*SECFLG - WSPT                                   SECA1040
      WSPT = WSPT + WSP(JMAX)                                           SECA1045
      WGAS(JMAX) = WSP(JMAX) * WNCFR                                    SECA1050
      WP(JMAX) = WSP(JMAX) + WGAS(JMAX)                                 SECA1055
      WPT = WPT + WP(JMAX)                                              SECA1060
      IPLOOP=IPLOOP + 1                                                 SECA1065
      KK = 1                                                            SECA1070
      DO 340 J=1,ISEC                                                   SECA1075
         IF (BAFFLE.EQ.0.0) GO TO 340                                   SECA1080
C  THIS PACKAGE TRIES TO KEEP ORDERED FLOW QUANTITIES TO SECTORS.       SECA1085
C  IF THE BUNDLE IS BAFFLED THE ODD-NUMBERED SECTORS SHOULD HAVE        SECA1090
C  MORE FLOW BECAUSE THERE ARE FEWER TUBES ABOVE THE AVERAGE FLOW       SECA1095
C  PATH AND THEREFORE LESS CONDENSATE RAIN TO OBSTRUCT FLOW.            SECA1100
         IF (KK.EQ.2) GO TO 320                                         SECA1105
         KK = KK + 1                                                    SECA1110
         IF (WSP(J).GE.WSP(J+1)) GO TO 330                              SECA1115
         SWTCH = WSP(J+1)                                               SECA1120
         WSP(J+1) = WSP(J)                                              SECA1125
         WSP(J) = SWTCH                                                 SECA1130
         SWTCH = WGAS(J+1)                                              SECA1135
         WGAS(J+1) = WGAS(J)                                            SECA1140
         WGAS(J) = SWTCH                                                SECA1145
         GO TO 330                                                      SECA1150
  320    KK = 1                                                         SECA1155
  330    CONTINUE                                                       SECA1160
  340    WS(1,J)=WSP(J)                                                 SECA1165
      IF (IPLOOP-20) 10,10,350                                          SECA1170
  350 WRITE(6,10200)IDENT                                               SECA1175
  360 NERR = 1                                                          SECA1180
  370 RETURN                                                            SECA1185
10000 FORMAT(1H0,'***SATURATED STEAM PRESSURE HAS GONE NEGATIVE,   ROW',SECA1190
     , I5,'   SECTOR',I5,'   PMIX =',E15.5,'   WS = ',E15.5)            SECA1195
10100 FORMAT(1H1,19A4,A3/1H0,5X,2HI=,I2,5X,2HJ=,I1/1H0,                SECA1200
     , 24HNO CONVERGENCE FOR WCND(I2,1H,I1,1H))                         SECA1205
10200 FORMAT(1H1,19A4,A3,40HNO CONVERGENCE IN COND. DELTA P (IPLOOP) )  SECA1210
10300 FORMAT(1H0,                                                       SECA1215
     , 'STEAM TEMP. FALLEN BELOW BRINE INLET TEMP.,   STSAT =',E13.6,   SECA1220
     , '  ROW ',I3,'  SECTOR ',I3)                                      SECA1225
      END                                                               SECA1230
```

```
      SUBROUTINE DFSVTY(TK,PATM,AM1,AM2,R1,R2,E1OK,E2OK,V1,V2,DG,DGG)
C  DG = GAS DIFFUSIVITY, SQ.CM./SEC - CHEM.ENGRS.HANDBOOK, 4TH ED.,
C  R.H.PERRY, 14-20, 1963, MC GRAW-HILL  (WILKE-LEE MOD.)
C  CID = VALUES OF COLLISION INTEGRAL. FUNCTION FITTED BY R.W.BROWELL
C        FROM TABLE 14-45 OF ABOVE REF. 4/11/68
C  TK  = ABS. TEMP., DEG. KELVIN
C  PATM= ABS. PRESS., ATMOSPHERES
C  R12 = COLLISION DIA., ANGSTROMS
C  R1  = COMPONENT 1 COLLISION DIA., ANGSTROMS
C  R2  = COMPONENT 2 COLLISION DIA., ANGSTROMS
C E12OK= COMBINED FORCE CONSTANT FOR COMPONENTS 1 & 2., DEG. KELVIN
C  E1OK= FORCE CONSTANT FOR COMPONENT 1, DEG. KELVIN
C  E2OK= FORCE CONSTANT FOR COMPONENT 2, DEG. KELVIN
C  DGG = GAS DIFFUSIVITY - GILLILAND'S CRUDE APPROX. METHOD,PP.14-21 REF
      IF (E1OK.EQ.0.0.AND.V1.EQ.0.0) GO TO 30
      IF (E1OK.EQ.0.0) GO TO 20
      IF (R1.GT.0.0) GO TO 10
      R1 = 1.18 * V1**.333
      R2 = 1.18 * V2**.333
   10 CONTINUE
      R12 = (R1 + R2)/2.0
      E12OK = (E1OK * E2OK)**0.5
      TKOE = TK /E12OK
      CID = 0.1685 /TKOE**1.2063 + 0.5328 /TKOE**0.1579
      RTSM = (1./AM1 + 1./AM2)**0.5
      B = (10.7 -2.46*RTSM)*1.E-4
      DG = B * TK**1.5 * RTSM /PATM /R12**2 / CID
      IF (V1.EQ.0.0) GO TO 40
   20 CONTINUE
      DGG = 0.0043 * TK**1.5 * RTSM /PATM /(V1**.333+V2**.333)**2
      GO TO 40
   30 CONTINUE
      WRITE(6,10000)
   40 CONTINUE
      RETURN
10000 FORMAT('0  ** NEITHER FORCE CONSTANTS NOR MOLECULAR VOLUMES EXIST
     ,AS ARGUMENTS. CALCULATIONS CANNOT PROCEED. **' )
      END
```

```
      FUNCTION XTR (X,Y,N,T,SW,X1N,YN,M)                                XTR    0
C******                                                                 XTR    5
C         FUNCTION XTR ASSUMES A LOG-LOG MODEL, IE  LOG Y = A + B1 * LOG XTR   10
C         AND PERFORMS A LINEAR LEAST SQUARE REGRESSION ON THE          XTR   15
C         TRANSFORMED POINTS, ALL POINTS ARE USED FOR EACH REGRESSION   XTR   20
C         EXCEPT FOR THE FIRST , WHICH IS NOT USED AT ALL               XTR   25
C********                                                               XTR   30
      DIMENSION X1N(11),YN(11)                                          XTR   35
      IF (Y.LE.0.) Y = .00001                                           XTR   40
      IF (N.EQ.0) GO TO 30                                              XTR   45
      X1N(N) = ALOG(X)                                                  XTR   50
      YN(N) = ALOG(Y)                                                   XTR   55
      IF (N.LT.2) GO TO 40                                              XTR   60
      SX1N = 0.0                                                        XTR   65
      SYN = 0.0                                                         XTR   70
      IF (M.LT.N-3) M = N-3                                             XTR   75
      DO 10 I=M,N                                                       XTR   80
         SX1N = SX1N + X1N(I)                                           XTR   85
         SYN = SYN + YN(I)                                              XTR   90
   10    CONTINUE                                                       XTR   95
      X1BAR = SX1N / (N-M+1)                                            XTR  100
      YBAR = SYN / (N-M+1)                                              XTR  105
      SX12 = 0.0                                                        XTR  110
      SX1Y = 0.0                                                        XTR  115
      DO 20 I=M,N                                                       XTR  120
         SX12 = SX12 + (X1N(I) - X1BAR) ** 2                            XTR  125
         SX1Y = SX1Y + (X1N(I) - X1BAR) * (YN(I) - YBAR)                XTR  130
   20    CONTINUE                                                       XTR  135
      B1 = SX1Y / SX12                                                  XTR  140
      A = YBAR - B1 * X1BAR                                             XTR  145
      TN = ALOG(T)                                                      XTR  150
      XTR = EXP((TN-A) / B1)                                            XTR  155
      GO TO 50                                                          XTR  160
   30 M = 1                                                             XTR  165
   40 XTR = X * (1. + (Y-T) * 5. * SW)                                  XTR  170
C******                                                                 XTR  175
C         CHANGE OF VARIABLE IS LIMITED TO 10 PERCENT                   XTR  180
C******                                                                 XTR  185
   50 IF (ABS(XTR-X)/X.LT.0.1) GO TO 60                                 XTR  190
      XTR = X * (1. + 0.1 * ABS(Y-T)/(Y-T) * SW)                        XTR  195
   60 RETURN                                                            XTR  200
      END                                                               XTR  205
```

```
      FUNCTION AMUFN(T,JGAS)                                            AMUF   0
      IMIX = 0                                                          AMUF   5
      GO TO (30,20,10), JGAS                                            AMUF  10
   10 IMIX = 1                                                          AMUF  15
   20 CONTINUE                                                          AMUF  20
C  INERT GAS IS CO2                                                     AMUF  25
C**  VISCOSITY FOR CARBON DIOXIDE  LB/FT-SEC                            AMUF  30
      GAS2 = 1.0 E-5 * (-0.046 + (2.282E-3 + (-6.131 E-7 + 9.699E-11 *T)AMUF  35
     ,  *T) *T)                                                         AMUF  40
      AMUFN = GAS2                                                      AMUF  45
      IF (IMIX.EQ.0) RETURN                                             AMUF  50
   30 CONTINUE                                                          AMUF  55
C  INERT GAS IS AIR                                                     AMUF  60
      GAS1 =1.0E-5*(0.1490+(0.238E-2)*T-(.7209E-6)*T**2+(.1184E-9)*T**3)AMUF  65
      AMUFN = GAS1                                                      AMUF  70
      IF (IMIX.EQ.0) RETURN                                             AMUF  75
C  INERT GAS IS MIXTURE OF AIR & CO2                                    AMUF  80
      GAS3 = (GAS1 + GAS2)/2.0                                          AMUF  85
      AMUFN = GAS3                                                      AMUF  90
      RETURN                                                            AMUF  95
      END                                                               AMUF 100
```

```
      FUNCTION BMUFN(C,T)                                               BMUF   0
C     VISCOSITY OF SALINE SOLUTION.  RANGE OF DATA WAS 0 - 24 PERCENT   BMUF   5
C     CONCENTRATION AND 40 - 210 DEGREES FARENHEIT.                     BMUF  10
      R = T + 459.69                                                    BMUF  15
      BMUFN = DEXP(-0.11591155D+2*C + 0.12602329D-1*C*R + 0.38637378D+4*BMUF  20
     ,  C/R + 0.4606532D-2*R + 0.47595941D+4/R - 0.1059252566D+2)       BMUF  25
      RETURN                                                            BMUF  30
      END                                                               BMUF  35
```

```
      FUNCTION CPAFN(T,JGAS)                                            CPAF   0
      IMIX = 0                                                          CPAF   5
      GO TO (30,20,10), JGAS                                            CPAF  10
   10 IMIX = 1                                                          CPAF  15
   20 CONTINUE                                                          CPAF  20
C  INERT GAS IS CO2                                                     CPAF  25
C** HEAT CAPACITY FOR MW = 40.1   BTU/LB-MOL - DEG R                    CPAF  30
      GAS2 = 0.209 * 40.1                                               CPAF  35
      CPAFN = GAS2                                                      CPAF  40
      IF (IMIX.EQ.0) RETURN                                             CPAF  45
   30 CONTINUE                                                          CPAF  50
C  INERT GAS IS AIR                                                     CPAF  55
C AIR CP, BTU / LB MOLE-DEGREE RANKIN                                   CPAF  60
      GAS1 =7.139-0.9884E-3*T +0.1393E-5*T**2 -0.3367E-9*T**3           CPAF  65
      CPAFN = GAS1                                                      CPAF  70
      IF (IMIX.EQ.0) RETURN                                             CPAF  75
C  INERT GAS IS MIXTURE OF AIR & CO2                                    CPAF  80
      GAS3 = (GAS1 + GAS2)/2.0                                          CPAF  85
      CPAFN = GAS3                                                      CPAF  90
      RETURN                                                            CPAF  95
      END                                                               CPAF 100
```

```
      FUNCTION CPFN(C,T)                                                CPFN   0
   10 IF (C-0.005) 20,20,30                                             CPFN   5
C*****EQUATION SPECIFIC HEAT FOR PURE WATER                             CPFN  10
   20 CP= 1.0121559 +(-0.24618473E-3 + 0.10282155E-5*T)*T               CPFN  15
      GO TO 40                                                          CPFN  20
C*****EQUATION SPECIFIC HEAT FOR BRINE                                  CPFN  25
   30 CP=.96946859+(2.*(0.00010404965)*T)-(.91199294*C) +(2.*(-         CPFN  30
     , .00064829659)*C*T)+(-1.555779*(C**2))+ (2.*(.0076721469)*(C**2)* CPFN  35
     , T)+(6.7981008*(C**3))+ (2.*(-.012610354)*(C**3)*T)               CPFN  40
   40 CPFN=CP                                                           CPFN  45
      RETURN                                                            CPFN  50
      END                                                               CPFN  55


      FUNCTION CPSFN(T)                                                 CPSF   0
C***                                                                    CPSF   5
C     CPSFN CALCULATES THE HEAT CAP OF STEAM IN BTU/LB-MOL-R GIVEN T IN CPSF  10
C    DEG R. EQUATIONS FROM H. NORITAKE, BASED ON TABULATED VALUES IN   CPSF  15
C    NASA TR-R-132                                                      CPSF  20
C***                                                                    CPSF  25
      CPSFN = (7.838 - (.2531E-3 - (.2892E-6 - .7693E-10*T )*T )*T )    CPSF  30
      RETURN                                                            CPSF  35
      END                                                               CPSF  40


      FUNCTION HFGFN(T)                                                 HFGF   0
      HFGFN=1093.88-0.5703*T+.00012819*T**2-.0000008824*T**3            HFGF   5
      RETURN                                                            HFGF  10
      END                                                               HFGF  15


      SUBROUTINE PRSDRP(TSAT,VMIX,WS,WNC,AXO,SDO,SF,DELPTP,ENHF)        PRSD   0
CCC                                                                     PRSD   5
C    PRSDRP  REBUILT ON 9-16-69 TO USE EQUATION FOR SF                  PRSD  10
CCC                                                                     PRSD  15
      SG = 32.174                                                       PRSD  20
      GSTAR = (WS+WNC) / (AXO*3600.)                                    PRSD  25
      ANRE = (SDO * GSTAR) / SMUFN(TSAT)                                PRSD  30
      SF = (0.102 + 52.2 / ANRE) * ENHF                                 PRSD  35
      DELPTP = SF * GSTAR**2 * VMIX / (72.0 * SG)                       PRSD  40
      RETURN                                                            PRSD  45
      END                                                               PRSD  50


      FUNCTION PSATFN(T)                                                PSAT   0
      PSATFN=2.718**(14.150119-(6452.5621/T)-(837533.21/T**2))          PSAT   5
      RETURN                                                            PSAT  10
      END                                                               PSAT  15
```

```
      FUNCTION ROEFN(C,T)                                               ROEF   0
C     DENSITY OF SALINE SOLUTION.  RANGE OF DATA WAS 0 - 26 PERCENT     ROEF   5
C     CONCENTRATION AND 40 - 300 DEGREES FARENHEIT.                     ROEF  10
      ROEFN = 0.62707172E2 + 0.49364088E2 * C - (0.43955304E-2 +        ROEF  15
     , 0.32554667E-1 * C + (0.46076921E-4 - 0.63240299E-4 * C)*T)*T     ROEF  20
      RETURN                                                            ROEF  25
      END                                                               ROEF  30


      FUNCTION SKBFN(C,T)                                               SKBF   0
C            THERMAL CONDUCTIVITY OF SALINE SOLUTION.  RANGE OF DATA    SKBF   5
C            0 - 24 PERCENT CONCENTRATION AND 40 - 300 DEGREES FARENHEITSKBF  10
      SKBFN=(.30157913+.697989E-3*T-.12506E-5*T**2 -.2072E-10*T**3)*(-  SKBF  15
     , .1687109*C+1.)                                                   SKBF  20
      RETURN                                                            SKBF  25
      END                                                               SKBF  30


      FUNCTION SMUFN(T)                                                 SMUF   0
      SMUFN=1.0E-5*(0.122+(1.001E-3)*T+(2.892E-7)*T**2-(7.693E-11)*T**3)SMUF   5
      RETURN                                                            SMUF  10
      END                                                               SMUF  15


      FUNCTION TSATFN(P)                                                TSAT   0
      AA=(ALOG(P)-14.150119)                                            TSAT   5
      DET=6452.5621**2-(4.0*AA*837533.21)                               TSAT  10
      IF (DET) 10,20,20                                                 TSAT  15
   10 WRITE(6,10000)                                                    TSAT  20
      CALL EXIT                                                         TSAT  25
   20 X=(-6452.5621+SQRT(DET))/(2.0*AA)                                 TSAT  30
      Y=(-6452.5621-SQRT(DET))/(2.0*AA)                                 TSAT  35
      IF (X-Y) 30,40,40                                                 TSAT  40
   30 TSATFN=Y                                                          TSAT  45
      GO TO 50                                                          TSAT  50
   40 TSATFN=X                                                          TSAT  55
   50 CONTINUE                                                          TSAT  60
      RETURN                                                            TSAT  65
10000 FORMAT(1H1,37HSUBROUTINE TSATFN FINDS COMPLEX ROOTS)              TSAT  70
      END                                                               TSAT  75


      FUNCTION VGFN(T,P)                                                VGFN   0
      X=ALOG(T/P)                                                       VGFN   5
      VGFN= EXP(((.103758E-2*X-.0177861)*X+1.10267)*X-.72240)           VGFN  10
      RETURN                                                            VGFN  15
      END                                                               VGFN  20
```

INTERNAL DISTRIBUTION

1. T. D. Anderson
2. S. J. Ball
3. S. E. Beall
4. W. B. Cottrell
5. F. L. Culler
6. D. M. Eissenberg
7. A. P. Fraas
8. R. P. Hammond
9.-11. J. A. Hafford
12. H. W. Hoffman
13. J. S. Johnson
14. R. N. Lyon
15. R. E. MacPherson
16. H. C. McCurdy
17. A. J. Miller
18. A. M. Perry
19. M. J. Skinner
20. I. Spiewak
21. D. A. Sundberg
22. D. B. Trauger
23. G. D. Whitman
24. J. V. Wilson
25.-26. Central Res. Library
27.-28. Doc. Ref. Section
29.-31. Laboratory Records Dept.
32. Laboratory Records (RC)

EXTERNAL DISTRIBUTION

33. J. W. O'Meara, OSW, Washington, D. C.
34. W. S. Gillam, OSW, Washington, D. C.
35.-39. R. H. Evans, OSW, Washington, D. C.
40. J. J. Strobel, OSW, Washington, D. C.
41.-42. W. A. Williams, AEC, Washington, D. C.
43.-44. J. Pidkowicz, AEC, ORO
45.-46. Technical Information Center, Oak Ridge
47. Research and Technical Support Div., ORO