LOCKHEED MARTIN ENERGY RESEARCH LIBRARIES

3 4456 0514881 8

CENTRAL RESEARCH LIBRARY

ORNL-TM-4013

cy. 1

RADIATION SAFETY AND CONTROL FOR THE ELECTROMAGNETIC ISOTOPE SEPARATION OF THE HEAVY ELEMENTS IN BUILDING 9204-3, Y-12 PLANT, INCLUDING OPERATIONAL PROCEDURES AND FACILITY LAYOUTS

G. M. Bonic, J. T. Barker, H. R. Gwinn, J. E. Keeton,
L. O. Love, H. T. Milton, W. K. Prater, and F. M. Scheitlin

OAK RIDGE NATIONAL LABORATORY
CENTRAL RESEARCH LIBRARY
DOCUMENT COLLECTION
LIBRARY LOAN COPY
DO NOT TRANSFER TO ANOTHER PERSON
If you wish someone else to see this document, send in name with document and the library will arrange a loan.

OAK RIDGE NATIONAL LABORATORY
OPERATED BY UNION CARBIDE CORPORATION - FOR THE U.S. ATOMIC ENERGY COMMISSION

This report was prepared as an account of work sponsored by the United States Government. Neither the United States nor the United States Atomic Energy Commission, nor any of their employees, nor any of their contractors, subcontractors, or their employees, makes any warranty, express or implied, or assumes any legal liability or responsibility for the accuracy, completeness or usefulness of any information, apparatus, product or process disclosed, or represents that its use would not infringe privately owned rights.

ORNL-TM-4013

Contract No. W-7405-eng-26

ISOTOPES DEVELOPMENT CENTER

RADIATION SAFETY AND CONTROL FOR THE ELECTROMAGNETIC ISOTOPE SEPARATION OF THE HEAVY ELEMENTS IN BUILDING 9204-3, Y-12 PLANT, INCLUDING OPERATIONAL PROCEDURES AND FACILITY LAYOUTS

Contributors:

G. M. Banic

J. T. Barker

H. R. Gwinn

J. E. Keeton

L. O. Love

H. T. Milton

W. K. Prater

F. M. Scheitlin

MARCH 1973

OAK RIDGE NATIONAL LABORATORY
Oak Ridge, Tennessee 37830
operated by
UNION CARBIDE CORPORATION
for the
U.S. ATOMIC ENERGY COMMISSION

LOCKHEED MARTIN ENERGY RESEARCH LIBRARIES

3 4456 0514881 8

CONTENTS

Page

ABSTRACT 1

PURPOSE OF SEPARATIONS PROGRAM 1

I. GENERAL DESCRIPTION OF FACILITY 1

A. CONTAINMENT AREA DESCRIPTION AND PROCESS-FLOW DRAWINGS . . 1

B. AIR SUPPLY AND EXHAUST SYSTEMS FOR RADIOACTIVE CONTAINMENT FACILITY 5

1. Introduction 5
2. Outside Air Supply 5
3. General-Area Exhaust 10
4. Glove-Box and Enclosure Exhaust 11
5. Emergency Power 11
6. Barometric Dampers 11

C. INSTRUMENTATION 12

1. Introduction 12
2. Evaporator System 12
3. Furnace Glove Boxes 15
4. Miscellaneous Glove Boxes 17
5. Storage Tanks 17
6. Electrical Operation of the Carbon Burners 18
7. Annunciator Panel 19

II. OPERATIONAL PROCEDURES 24

A. HEALTH-PHYSICS AND ENTRANCE REQUIREMENTS 24

1. Alpha Air Monitors 24
2. Protective-Clothing Regulations 25

B. CRITICALITY 26

C. OPERATION OF GLOVE-BOX EXHAUST SYSTEM 27

1. Introduction 27
2. Normal Operation 27
3. Changing Glove-Box Filters 28
4. Washing Down Plutonium Main-Glove-Box Exhaust System . 29

D. TRACK AREA 32

1. Installing Units 32
2. Calutron Tank Pumpdown and Termination 32
3. Pulling Units 35

Page

E. COMPONENT WASH AREA 35

1. Washing Liner in Glove Box 35
2. Transferring Wash Solution to Feed Tanks 38
3. Source and Receiver Service Glove Box 38
4. Miscellaneous Notes 38

F. CHEMICAL PROCESSING PROCEDURES 40

1. General Description 40
2. Handling Liner Wash Solutions in the Laboratory Area . 45
3. Recovering Liner Wash Solution 49
4. Filtration 50
5. Evaporation 51
6. Recovery of Wash Solutions and Solids from Source Unit 52
7. Anion-Exchange Column 54
8. Determining ^{235}U Content by Gamma Spectrometry (Francis-Bell Single-Channel Spectrometry) 56
9. Curium Product Recovery 57

III. EMERGENCY PROCEDURES 60

A. POWER FAILURE 60

1. Plutonium-Chemistry Area 61
2. Emergency Transfer of Recirculating-Chilled-Water System (RCWS) to Process Water 63
3. Servicing Calutron Pumping System After Power Failure 65

B. MONTHLY CHECKS OF THE FACILITY SAFETY DEVICES 65

1. Plutonium Laboratory 65
2. Plutonium-Glove-Box-Exhaust Vacuum Controller and Relief-Valve System 68
3. Absolute Filters 69

C. BUILDING EMERGENCY AND CRITICALITY 69

1. Radiation Evacuation Procedure for Building 9204-3 . . 69
2. Building Emergencies 73
3. Criticality 73

IV. APPENDIXES 74

Appendix A: Monitor Locations, Building 9204-3 74

Appendix B: Radector Locations, Building 9204-3 74

Appendix C: Secondary Threshold Detector Locations, Building 9204-3 74

Page

Appendix D: Periodic Monitor Check, Building 9204-3 75

Appendix E: Personnel Assembly Station, Building 9204-3 . . . 77

Appendix F: Assignment of LED's to Assembly Station, Building 9204-3 77

Appendix G: Paging Microphones, Building 9204-3 77

Appendix H: Y-12 Monitor Alarm Report 78

Appendix I: Evacuation Maps 79

Appendix J: Y-12 Plant Radiation Monitor Check 83

RADIATION SAFETY AND CONTROL FOR THE ELECTROMAGNETIC ISOTOPE SEPARATION OF THE HEAVY ELEMENTS IN BUILDING 9204-3, Y-12 PLANT, INCLUDING OPERATIONAL PROCEDURES AND FACILITY LAYOUTS

ABSTRACT

This information relates to heavy-element isotope separations and chemical-processing procedures associated with the Radioactive Containment Facility located in Building 9204-3, Y-12. The data include area and equipment descriptions, operational procedures, and emergency plans. The basic data are those presented in the initial hazards evaluation report, *Review of Safety Hazards Associated with Special Separations Operations*, December 24, 1959, and subsequent revisions. This material is updated, effective November 1972, to include changes based on operational experiences yielding improved safety methods and to delete those operations no longer used. The present report represents the sixth revision of the initial compilation.

PURPOSE OF SEPARATIONS PROGRAM

The purpose of this program is to provide enriched isotopes of Pu, U, Th; of other selected alpha-active elements; and of specified low-level beta-gamma materials for USAEC-sponsored programs — both in this country and in Europe. Heavy-element-separations equipment includes eight calutrons housed as a single facility within a doubly contained area.

The Research Materials Collection of electromagnetically separated heavy-element isotopes (e.g., ^{233}U, ^{234}U, ^{235}U, ^{236}U, ^{238}U, ^{230}Th, ^{238}Pu, ^{239}Pu, ^{240}Pu, ^{241}Pu, ^{242}Pu, and ^{244}Pu) is maintained under this program. Separation of limited amounts of ^{242m}Am and the heavy curium isotopes has been undertaken in the present alpha-containment area to meet the critical need for measurements of these isotopes. A second containment area with special chemical facilities has been proposed for the continuation of the separation of the isotopes of americium, curium, and other highly active materials. These enriched isotopic materials are used in the determination of nuclear data needed for designing high-power-density nuclear power plants, in making cross-section measurements, and in fundamental investigations in the areas of physics and radiochemistry. Special conversions to requested forms of these materials are provided in some cases where technology has been developed and applicable equipment is available.

I. GENERAL DESCRIPTION OF FACILITY

A. CONTAINMENT AREA DESCRIPTION AND PROCESS-FLOW DRAWINGS

Figures 1-3 show, respectively, the location of Building 9204-3 in the Y-12 area, the containment area within Building 9204-3, and the flow diagram within the containment area that includes separations and chemical processing.

ORNL-DWG 70-14693R

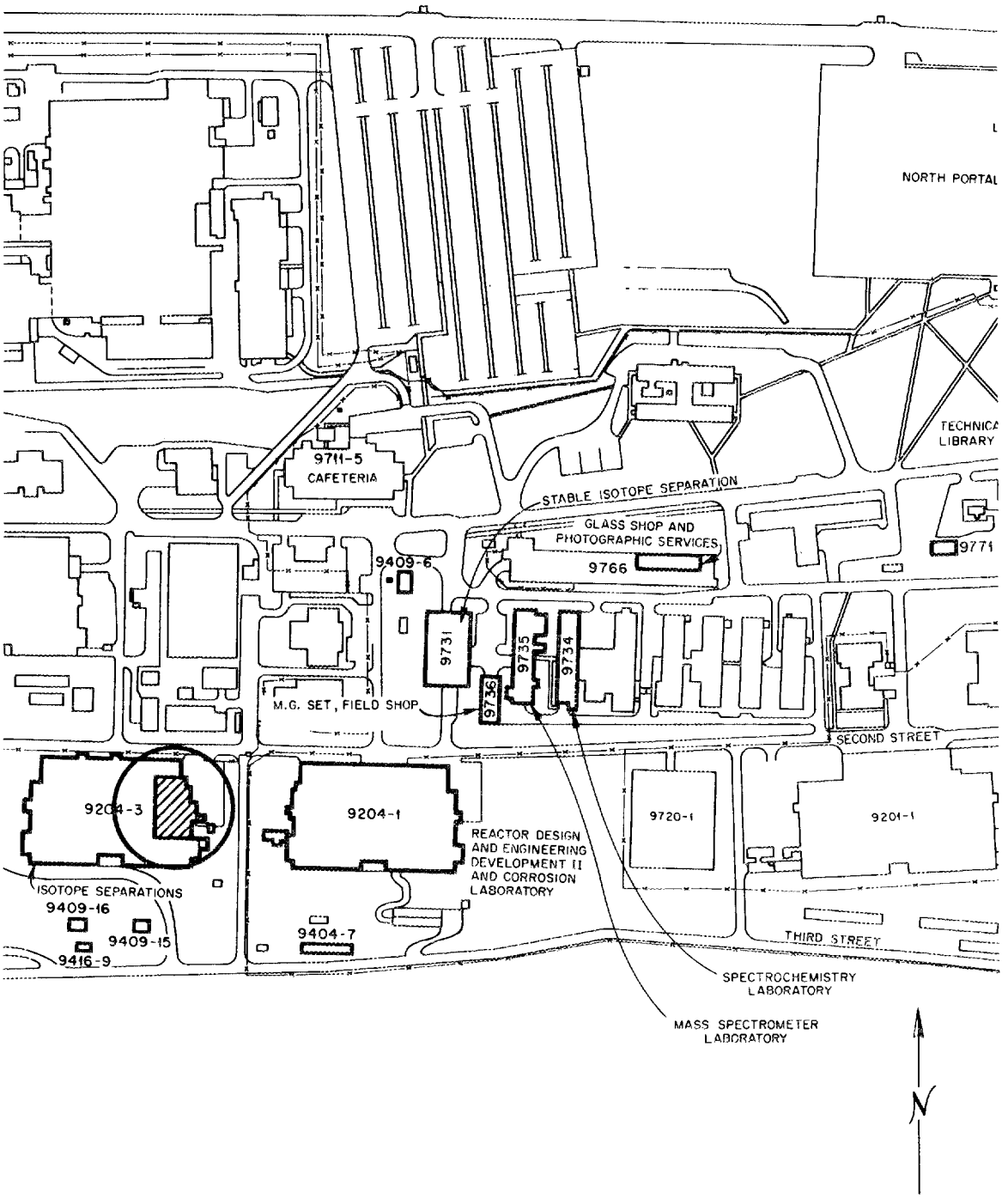

RADIOACTIVE CONTAINMENT FACILITY
OAK RIDGE NATIONAL LABORATORY
IN THE Y-12 AREA

Fig. 1

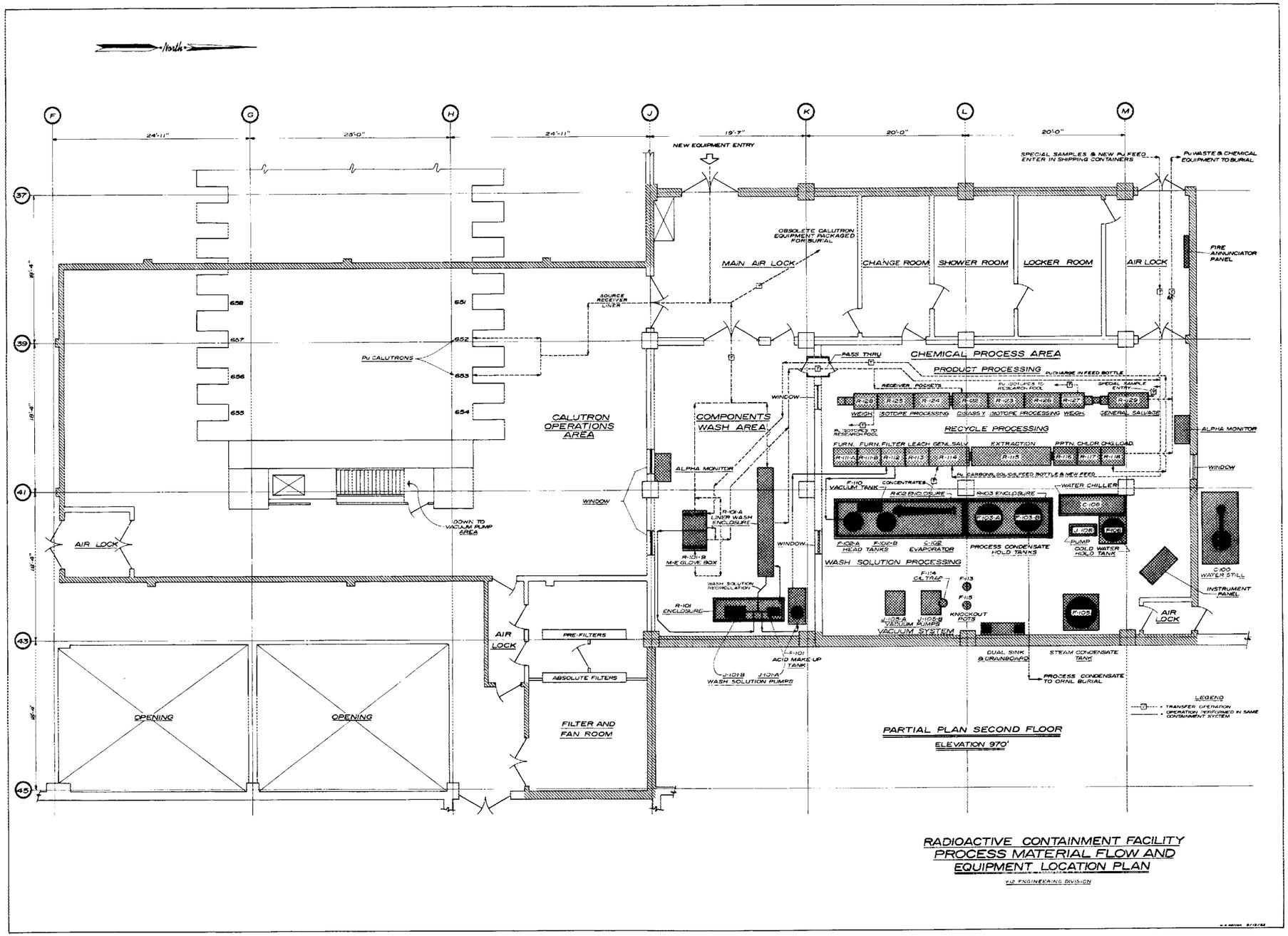
North
F
G
H
J
K
L
M
24'-11"
23'-0"
24'-11"
19'-7"
20'-0"
20'-0"
37
39
41
43
45
NEW EQUIPMENT ENTRY
SPECIAL SAMPLES & NEW Pu FEED ENTER IN SHIPPING CONTAINERS
Pu WASTE & CHEMICAL EQUIPMENT TO BURIAL
OBSOLETE CALUTRON EQUIPMENT PACKAGED FOR BURIAL
MAIN AIR LOCK
CHANGE ROOM
SHOWER ROOM
LOCKER ROOM
AIR LOCK
FIRE ANNUNCIATOR PANEL
SOURCE RECEIVER LINER
Pu CALUTRONS
CHEMICAL PROCESS AREA
PRODUCT PROCESSING
PASS THRU
RECEIVER POCKETS
SPECIAL SAMPLE ENTRY
WEIGH
ISOTOPE PROCESSING
DISCARD
ISOTOPE PROCESSING
WEIGH
GENERAL SALVAGE
RECYCLE PROCESSING
FURN.
FURN. FILTER
LEACH
GEN. SALV.
EXTRACTION
PPTN.
CHLOR.
CHG.
LOAD
WINDOW
ALPHA MONITOR
CALUTRON OPERATIONS AREA
COMPONENTS WASH AREA
DOWN TO VACUUM PUMP AREA
AIR LOCK
WATER CHILLER
CONCENTRATES
VACUUM TANK
HEAD TANKS
EVAPORATOR
PROCESS CONDENSATE HOLD TANKS
PUMP
COLD WATER HOLD TANK
WASH SOLUTION PROCESSING
WASH SOLUTION RECIRCULATION
M-E GLOVE BOX
ENCLOSURE
WATER STILL
INSTRUMENT PANEL
CIL TRAP
KNOCKOUT POTS
VACUUM PUMPS
VACUUM SYSTEM
ACID MAKE UP TANK
WASH SOLUTION PUMPS
PRE-FILTERS
ABSOLUTE FILTERS
FILTER AND FAN ROOM
OPENING
OPENING
DUAL SINK & DRAINBOARD
STEAM CONDENSATE TANK
PROCESS CONDENSATE TO ORNL BURIAL
LEGEND
TRANSFER OPERATION
OPERATION PERFORMED IN SAME CONTAINMENT SYSTEM
PARTIAL PLAN SECOND FLOOR
ELEVATION 970'
RADIOACTIVE CONTAINMENT FACILITY
PROCESS MATERIAL FLOW AND
EQUIPMENT LOCATION PLAN
Y-12 ENGINEERING DIVISION

Fig. 2

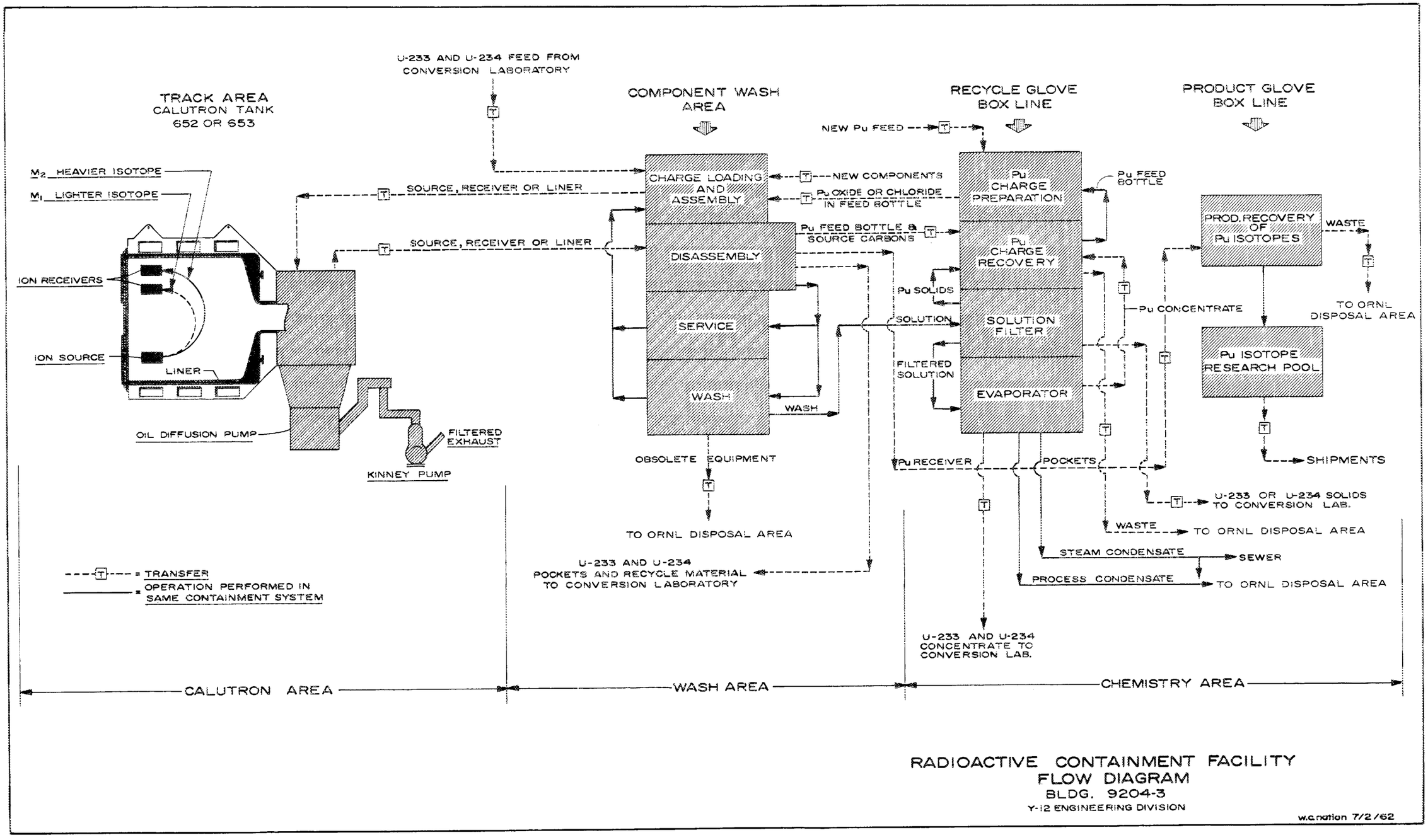
U-233 AND U-234 FEED FROM CONVERSION LABORATORY
TRACK AREA
CALUTRON TANK
652 OR 653
COMPONENT WASH AREA
RECYCLE GLOVE BOX LINE
PRODUCT GLOVE BOX LINE
M2 HEAVIER ISOTOPE
M1 LIGHTER ISOTOPE
ION RECEIVERS
ION SOURCE
LINER
OIL DIFFUSION PUMP
FILTERED EXHAUST
KINNEY PUMP
SOURCE, RECEIVER OR LINER
SOURCE, RECEIVER OR LINER
CHARGE LOADING AND ASSEMBLY
DISASSEMBLY
SERVICE
WASH
NEW COMPONENTS
Pu OXIDE OR CHLORIDE IN FEED BOTTLE
Pu FEED BOTTLE & SOURCE CARBONS
WASH
OBSOLETE EQUIPMENT
TO ORNL DISPOSAL AREA
U-233 AND U-234 POCKETS AND RECYCLE MATERIAL TO CONVERSION LABORATORY
NEW Pu FEED
Pu CHARGE PREPARATION
Pu CHARGE RECOVERY
SOLUTION FILTER
EVAPORATOR
Pu FEED BOTTLE
Pu SOLIDS
SOLUTION
FILTERED SOLUTION
Pu RECEIVER
POCKETS
Pu CONCENTRATE
U-233 AND U-234 CONCENTRATE TO CONVERSION LAB.
U-233 OR U-234 SOLIDS TO CONVERSION LAB.
WASTE
TO ORNL DISPOSAL AREA
STEAM CONDENSATE
SEWER
PROCESS CONDENSATE
TO ORNL DISPOSAL AREA
PROD. RECOVERY OF Pu ISOTOPES
WASTE
TO ORNL DISPOSAL AREA
Pu ISOTOPE RESEARCH POOL
SHIPMENTS
= TRANSFER
= OPERATION PERFORMED IN SAME CONTAINMENT SYSTEM
CALUTRON AREA
WASH AREA
CHEMISTRY AREA
RADIOACTIVE CONTAINMENT FACILITY
FLOW DIAGRAM
BLDG. 9204-3
Y-12 ENGINEERING DIVISION
w.c.nation 7/2/62

Fig. 3

B. AIR SUPPLY AND EXHAUST SYSTEMS FOR RADIOACTIVE CONTAINMENT FACILITY

1. Introduction

The Radioactive Containment Facility consists of the following areas:

Calutron operations area	Shower room
Components wash area	Locker room
Chemical process area	Personnel air lock
Equipment air lock	Three access air locks
Change room	

The environmental control of the Radioactive Containment Facility, located on the second floor, northeast, Building 9204-3, is obtained by the following:

Outside-air supply system
General-area exhaust system
Glove-box and enclosure exhaust system

The supply and exhaust systems and the pertinent control instruments are shown in Figs. 4-6.

2. Outside Air Supply

The outside-air supply system consists of fan AJ-112. The supply-air fan pulls 22,260 cfm of outside air through 36 PL-24 filters, two steam-preheat coils AC-110, and face and by-pass damper AM-103, and then discharges to the main supply duct located in the equipment air lock on the second floor.

Of the 22,260 cfm of outside air, 11,470 cfm is split off the main supply and directed by ducts to the calutron operations area. The remaining 10,790 cfm is split into two duct systems — (1) 1,990 cfm supplied to the equipment air lock, change room, shower room, locker room, personnel air lock, and ceiling and (2) 8,800 cfm supplied to the components wash area (2,800 cfm) and the chemical-process area (6,000 cfm).

Steam to the preheat coils, AC-110, is controlled by a pneumatic thermostat, TC-418, located in the outside air intake. The thermostat operates the steam-control valve, TCV-419, to obtain a fully open position at 35°F (2°C) and a closed position at 50°F (10°C). A remote-bulb thermostat, TC-417, controls the face and by-pass damper, AM-103, to provide a constant air temperature of 50°F (10°C) for air leaving at fan AJ-112. The temperature and humidity in each operational area are controlled by reheat steam coils and control thermostats located in the respective areas. The chemical-process area and the components-wash area have chilled-water coils AC-117 and AC-118, humidistats, and control thermostats TC-405 and TC-404 for maintaining a room condition of 25°C dry bulb, 50% relative humidity (maximum). A chilled-water coil has been added to the track-air-supply system and the area cooling is maintained by manual valving.

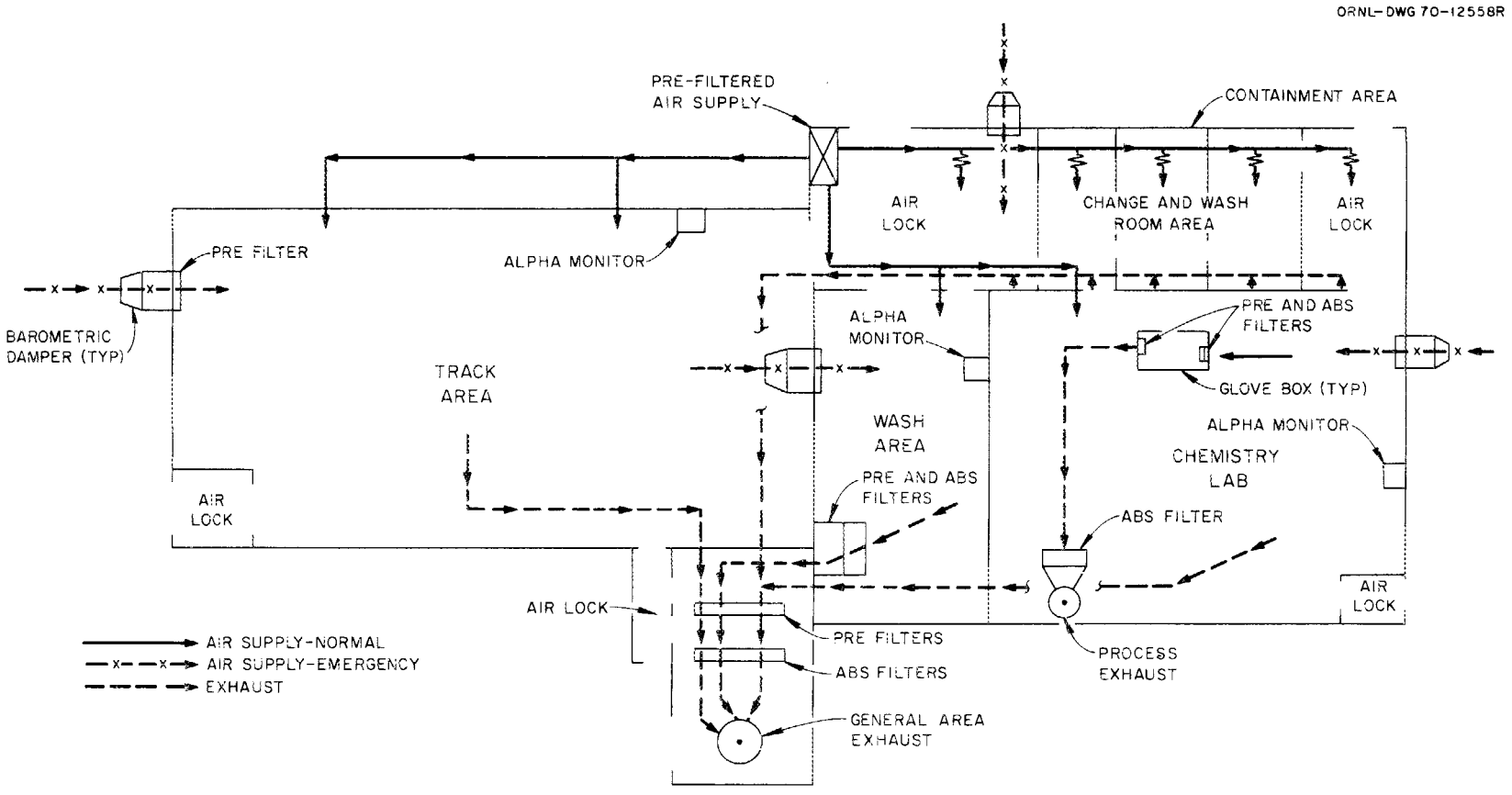

Air Supply and Exhaust Flow Diagram.

Fig. 4

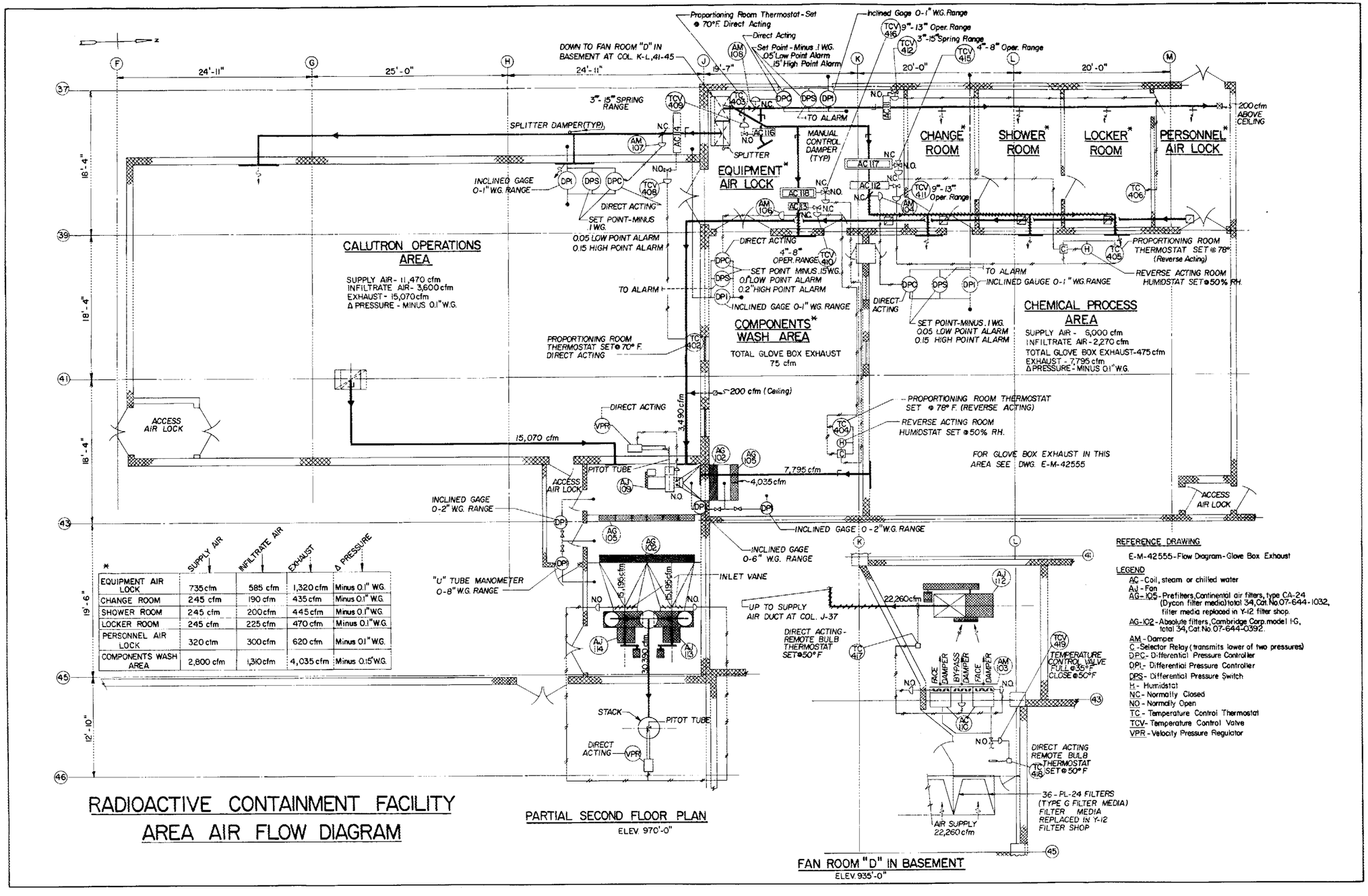

*	SUPPLY AIR	INFILTRATE AIR	EXHAUST	Δ PRESSURE
EQUIPMENT AIR LOCK	735 cfm	585 cfm	1,320 cfm	Minus 0.1" W.G.
CHANGE ROOM	245 cfm	190 cfm	435 cfm	Minus 0.1" W.G.
SHOWER ROOM	245 cfm	200 cfm	445 cfm	Minus 0.1" W.G.
LOCKER ROOM	245 cfm	225 cfm	470 cfm	Minus 0.1" W.G.
PERSONNEL AIR LOCK	320 cfm	300 cfm	620 cfm	Minus 0.1" W.G.
COMPONENTS WASH AREA	2,800 cfm	1,310 cfm	4,035 cfm	Minus 0.15" W.G.

Fig. 5

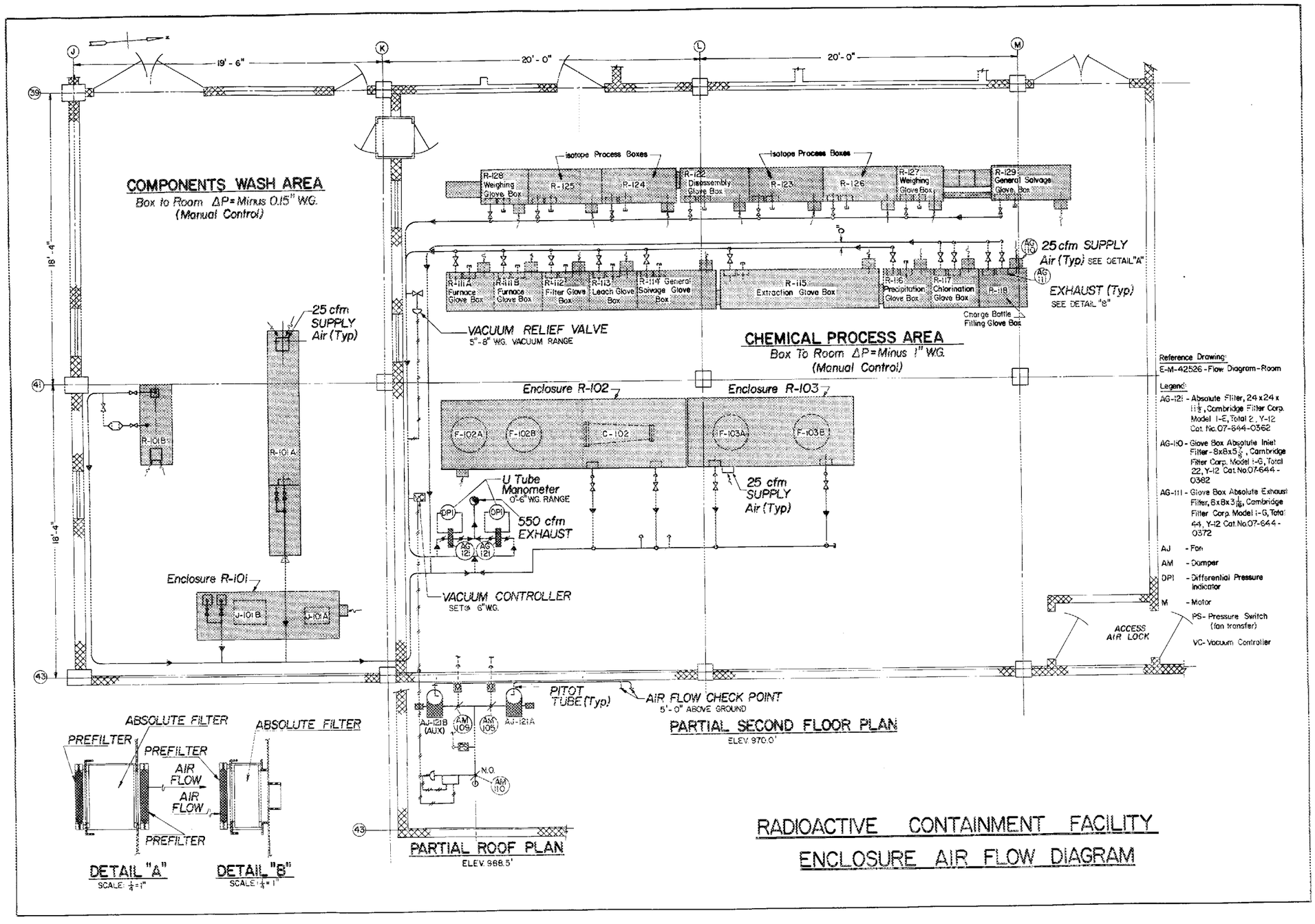
COMPONENTS WASH AREA
Box to Room ΔP=Minus 0.15" W.G.
(Manual Control)
19' - 6"
20' - 0"
20' - 0"
18' - 4"
18' - 4"
Isotope Process Boxes
Isotope Process Boxes
R-128 Weighing Glove Box
R-125
R-124
R-122 Disassembly Glove Box
R-123
R-126
R-127 Weighing Glove Box
R-129 General Salvage Glove Box
25 cfm SUPPLY Air (Typ) SEE DETAIL "A"
EXHAUST (Typ) SEE DETAIL "B"
R-111A Furnace Glove Box
R-111B Furnace Glove Box
R-112 Filter Glove Box
R-113 Leach Glove Box
R-114 General Salvage Glove Box
R-115 Extraction Glove Box
R-116 Precipitation Glove Box
R-117 Chlorination Glove Box
R-118
Charge Bottle Filling Glove Box
VACUUM RELIEF VALVE
5"-8" W.G. VACUUM RANGE
CHEMICAL PROCESS AREA
Box To Room ΔP=Minus 1" W.G.
(Manual Control)
25 cfm SUPPLY Air (Typ)
R-101B
R-101A
Enclosure R-102
Enclosure R-103
F-102A
F-102B
C-102
F-103A
F-103B
U Tube Manometer 0"-6" W.G. RANGE
DPI
DPI
550 cfm EXHAUST
AG 121
AG 121
25 cfm SUPPLY Air (Typ)
Enclosure R-101
J-101B
J-101A
VACUUM CONTROLLER
SET @ 6" W.G.
ACCESS AIR LOCK
PITOT TUBE (Typ)
AIR FLOW CHECK POINT
5'-0" ABOVE GROUND
AJ-121B (AUX)
AM 109
AM 105
AJ-121A
N.O.
AM 110
PARTIAL SECOND FLOOR PLAN
ELEV. 970.0'
PARTIAL ROOF PLAN
ELEV. 988.5'
ABSOLUTE FILTER
PREFILTER
PREFILTER
AIR FLOW
AIR FLOW
PREFILTER
ABSOLUTE FILTER
DETAIL "A"
SCALE: 1/4"=1"
DETAIL "B"
SCALE: 1/4"=1"
RADIOACTIVE CONTAINMENT FACILITY
ENCLOSURE AIR FLOW DIAGRAM
Reference Drawing:
E-M-42526-Flow Diagram-Room
Legend:
AG-121 - Absolute Filter, 24 x 24 x 11 1/2, Cambridge Filter Corp. Model 1-E, Total 2, Y-12 Cat. No. 07-644-0362
AG-110 - Glove Box Absolute Inlet Filter-8x8x5 5/8, Cambridge Filter Corp. Model 1-G, Total 22, Y-12 Cat. No. 07-644-0382
AG-111 - Glove Box Absolute Exhaust Filter, 6x8x3 1/16, Cambridge Filter Corp. Model 1-G, Total 44, Y-12 Cat. No. 07-644-0372
AJ - Fan
AM - Damper
DPI - Differential Pressure Indicator
M - Motor
PS - Pressure Switch (fan transfer)
VC - Vacuum Controller

Fig. 6

To prevent pressurization of the facility area, supply fan AJ-112 is electrically interlocked with exhaust fans AJ-113 and AJ-114. Fan AJ-112 will run only when both AJ-113 and AJ-114 are running.

The supply-air system is not connected to the emergency-power facility; in case of power failure, this system is shut down. Upon resumption of normal power, fan AJ-112 is restarted automatically.

All controls on the supply-air system are pneumatically operated. In case of instrument-air failure on the control system,

(1) AM-103 (face damper on coils AC-110) is open; the by-pass damper is closed.

(2) TCV-419 (temperature-control valve) is open, supplying steam to coils AC-110.

(3) TCV-408 (heating-temperature-control valve for calutron operations area) is open.

(4) TCV-409 (heating-temperature-control valve for equipment air lock) is open.

(5) TCV-412 (heating-temperature-control valve for change room, shower room, locker room, personnel air lock, and ceiling) is open.

(6) TCV-416 (cooling-temperature-control valve for components wash area) is open.

(7) TCV-410 (heating-temperature-control valve for components wash area) is closed.

(8) TCV-415 (cooling-temperature-control valve for chemical wash area) is open.

(9) TCV-411 (heating-temperature-control valve for chemical wash area) is closed.

(10) The following automatic control dampers are closed:

AM-107 (calutron operations area)
AM-106 (components wash area)
AM-104 (chemical process area)
AM-108 (equipment air lock, change room, shower room, locker room, personnel air lock, and ceiling)

NOTE: During normal operations, the above dampers are modulated to control room pressure at minus 0.1 in. w.g. in all areas except the components wash area which is controlled at minus 0.15 in. w.g.

3. General-Area Exhaust

The general-area exhaust system consists of fans AJ-113, AJ-114, and AJ-109.

Fans AJ-113 and AJ-114 run simultaneously and exhaust the following quantities of air through CA-24 prefilters and Model 1-G absolute filters:

	cfm
Calutron operations area[a]	15,070
Chemical process area	7,795
Ceiling	200
Equipment air lock	1,320
Change room	435
Shower room	445
Locker room	470
Personnel air lock	600
Discharge fan AJ-109	4,035
Total	30,390

[a]Exhaust is taken from diffusion-pump pit below floor grade.

Fans AJ-113 and AJ-114 are electrically interlocked with the glove box exhaust fans, AJ-121A and AJ-121B, to run only if AJ-121A or AJ-121B is operating.

Exhaust fans AJ-113 and AJ-114 are equipped with pitot tubes and differential-pressure switches, which are electrically interlocked with the area supply fan, AJ-112. This arrangement will maintain negative containment pressure, should mechanical failure cause one of the fans to cease functioning.

Fan AJ-109 provides the prime exhaust for the components wash area only; 4035 cfm are exhausted through CA-24 prefilters and Model 1-G absolute filters to the intake for fans AJ-113 and AJ-114, described above. Fan AJ-109 is electrically interlocked to run only when either one or both fans AJ-113 and AJ-114 are running.

Fans AJ-109 and AJ-113 are connected to the emergency power facility. In the event of normal power failure, only fan AJ-109 and fan AJ-113 will continue to run. In the event of AJ-113 failure, AJ-114 can be operated on emergency power by pushing the AJ-113 stop button. Upon return to normal power, fans AJ-114 and AJ-112 are restarted by pushing the reset button on the transfer switch panelboard.

Exhaust fans AJ-109, AJ-113, and AJ-114 are pneumatically controlled. In case of instrument-air failure, the fan-control dampers are open and fans operate at maximum capacity.

4. Glove-Box and Enclosure Exhaust

The glove-box and enclosure exhaust system consists of fans AJ-121A and AJ-121B.

Fan AJ-121A or AJ-121B is operated to exhaust the 22 glove boxes and enclosures contained within the facility. Each glove box and enclosure is designed for a maximum flow of 25 cfm through intake absolute filters sandwiched between Fiberglas prefilters, exhaust prefilters, and exhaust absolute filters. The exhaust from all glove boxes and enclosures (total 550 cfm) is connected to a common duct system, then passed through one of two parallel-connected absolute filters to the suction of either fan AJ-121A or fan AJ-121B, and finally discharged to the atmosphere.

Damper AM-110 to fans AJ-121A and AJ-121B is pneumatically controlled by a vacuum controller located in the chemical-process area. The vacuum controller is set to control the pressure in the duct header at minus 6 in. w.g. If there is a malfunction in the vacuum controller, a vacuum-relief valve located adjacent to the vacuum controller will relieve, to maintain the duct header at minus 6 in. w.g. The pressure in each glove box and enclosure is controlled manually at a pressure ranging from minus 0.5 to minus 1.0 in. w.g. with respect to the room.

Damper AM-105 is electrically controlled to be open when fan AJ-121A is operating. Damper AM-109 is electrically controlled to be open when fan AJ-121B is operating. When AJ-121A or AJ-121B is in standby or auxiliary condition, the damper to that fan is closed.

In case of fan failure, the pressure switch located at the fan suction will transfer power to the opposite fan and provide uninterrupted operation.

Fans AJ-121A and AJ-121B are connected to emergency power and, in case of power failure, either fan will continue to run.

In case of instrument-air failure, damper AM-110 opens fully and either fan AJ-121A or AJ-121B will operate at maximum capacity.

5. Emergency Power

Emergency power is provided to these fans as stated above. The timer in the emergency power circuit will bring the fans on line in the following sequence:

(1) AJ-121A or AJ-121B (glove-box and enclosure exhaust)

(2) AJ-113 or AJ-114 (general-area exhaust)

(3) AJ-109 (components-wash-area exhaust)

6. Barometric Dampers

Protection against the buildup of excess negative pressures within the calutron, wash, and chemistry areas, and the equipment air lock is provided

by barometric-type dampers. These are preset to open and provide vacuum relief when the pressure within an area becomes less than minus 0.3 in. w.g. The wash-area pressure is referenced to the pressure in the calutron area and may reach a value of minus 0.6 in. w.g. The pressures in the remaining areas are referenced to the building area surrounding the facility.

Relief air passes through the barometric dampers and CA-24 filters (with Dycon media) prior to entering an operating area. Filters limit cross-contamination between areas.

C. INSTRUMENTATION

Reference: Evaporator Instrument Application (Fig. 7) and Glove Box Instrument Application Diagram (Fig. 8)

1. Introduction

The following information covers the majority of instrumentation and associated applications used in the subject system. Instruments not covered in this report are items such as pressure gages, Rotameters, and other minor devices.

2. Evaporator System

a. Equipment Description

The evaporator system consists of one 10 gph, 100,000 Btu/hr evaporator, C-102; one 23-gal vacuum chamber, F-110; one condenser, C-104; two 300-gal condensate hold tanks, F-103A and F-103B; two evaporator feed tanks, F-102A and F-102B; and one steam condensate tank, F-105.

b. Process Flow

The feed supply to the system is a nitric acid mixture from the liner wash passing through two solution filters, G-101 and G-101A. Feed is supplied to feed tanks F-102A and F-102B and into the evaporator, C-102. The evaporator product is discharged into a 2-gal container for removal from the enclosure. Process condensate flows through the condenser, C-104, into condensate hold tank F-103A or F-103B. The vacuum chamber, F-110, is primarily designed to drain accumulated liquids from the filter units and connecting lines to eliminate solution holdup after each batch processing. The vacuum system is also available to remove liquids from the bottom of enclosure R-102 in case of line breakage or spills. The solutions drawn from these areas are then discharged into one of the evaporator feed tanks, F-102A or F-102B.

c. Instruments and Controls

Temperature in the evaporator is detected by using a 0 to 150°C dial-type thermometer, TI-118, in a tantalum well. During evaporation, TI-118 should indicate ∿110°C.

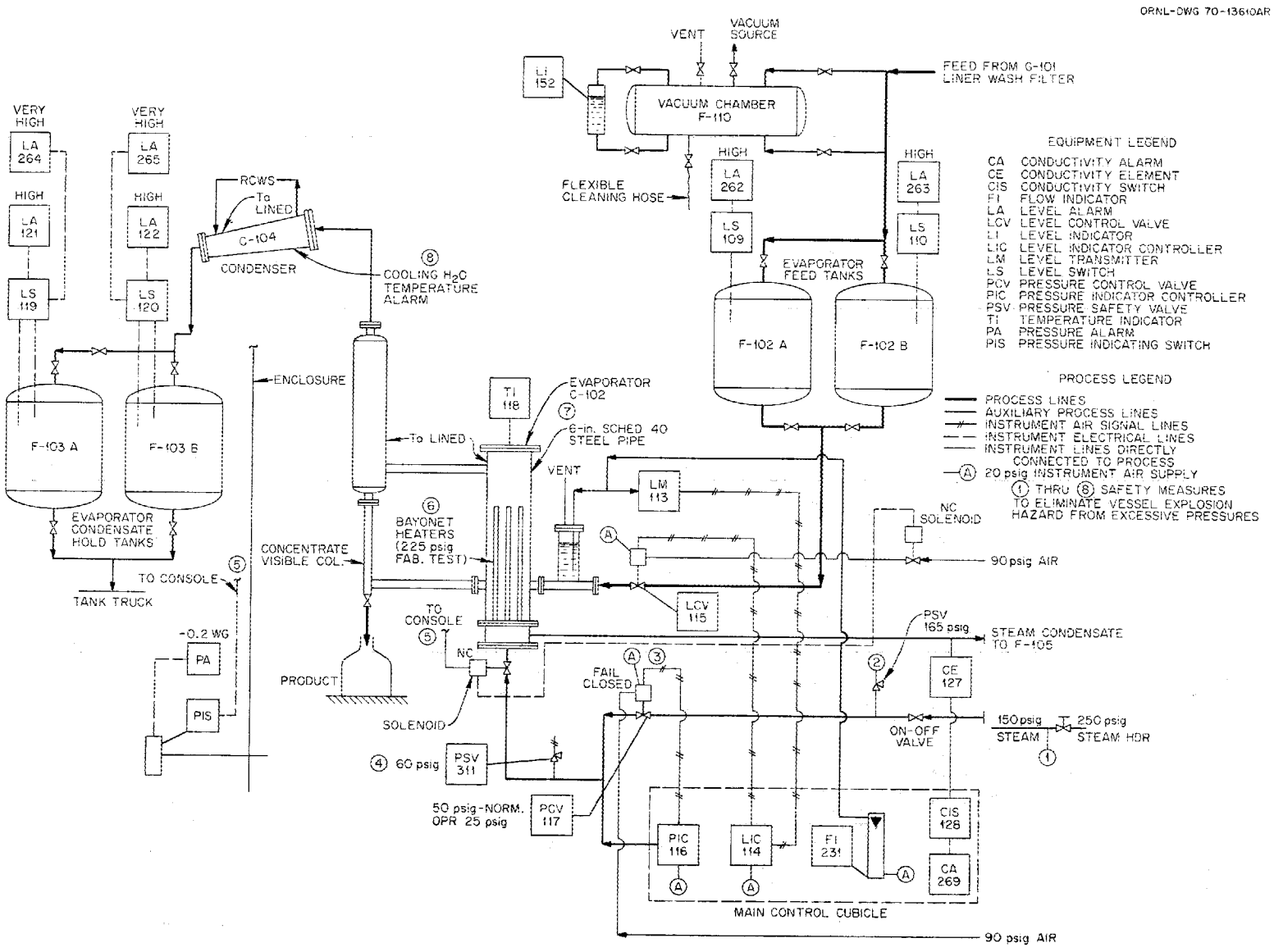

Evaporator Instrument Application Diagram.

Fig. 7

ORNL-DWG 70-14694R

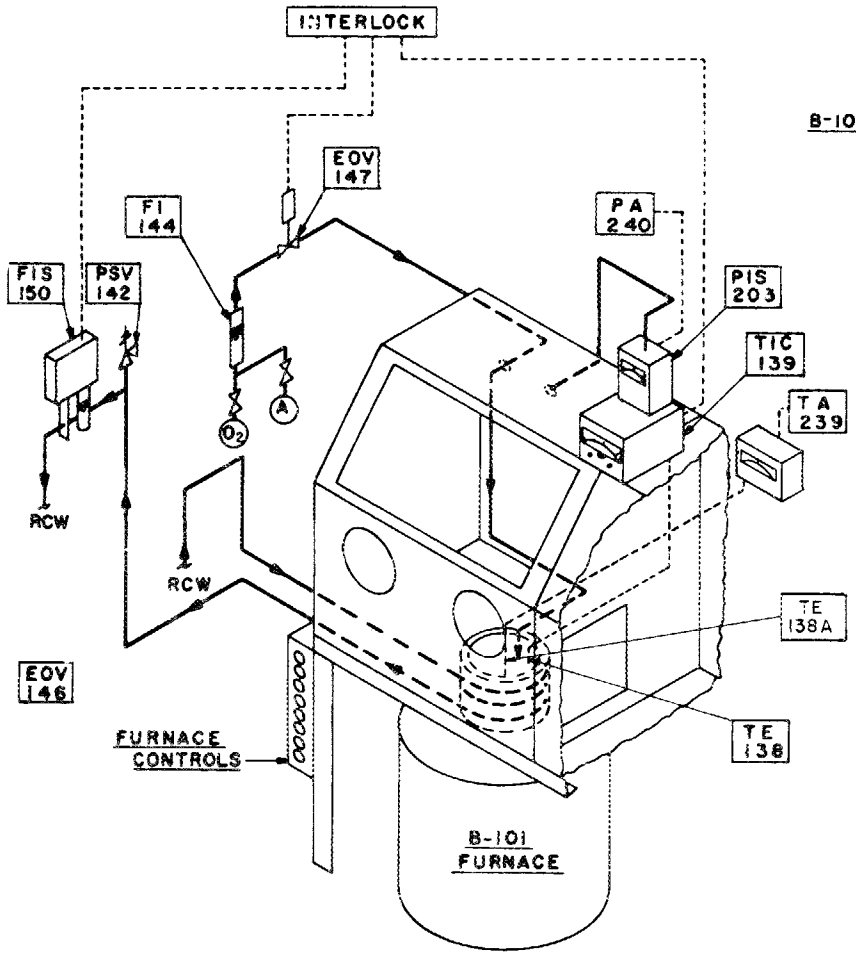

R-111A GLOVE BOX
INSTRUMENT APPLICATION DIAGRAM
TYP. FOR R-111A & B

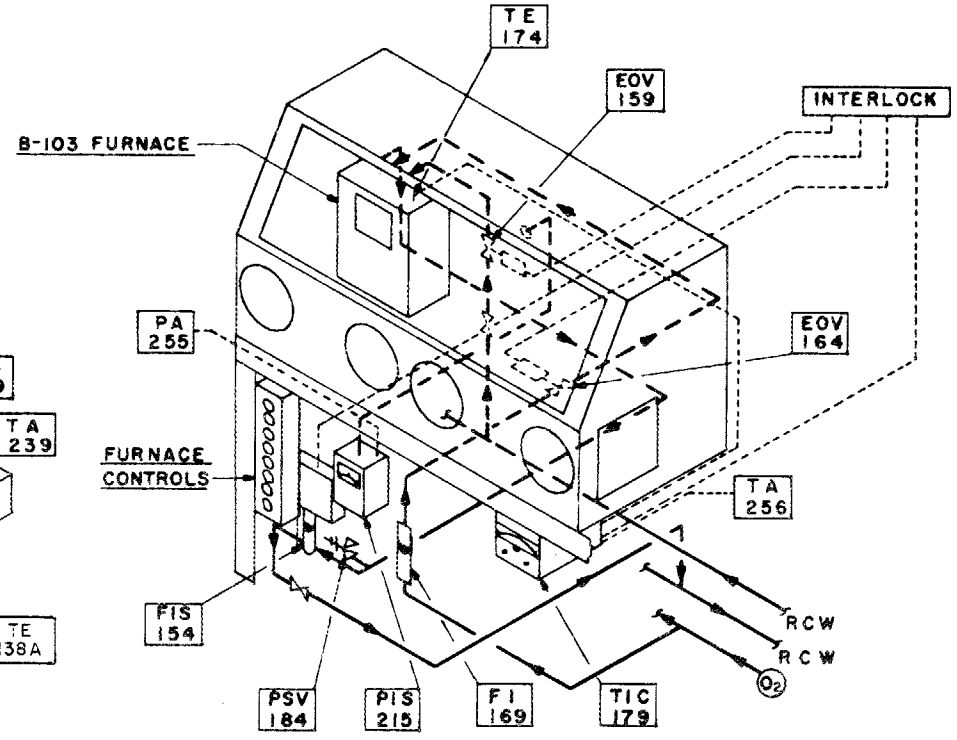

R-123 GLOVE BOX
INSTRUMENT APPLICATION DIAGRAM
TYP. FOR R-123 THRU R-126 & R-129

PROCESS LEGEND

- AUXILIARY PROCESS LINES
- HIDDEN LINES
- INSTRUMENT ELECTRICAL LINES
- (A) 2 PSIG INSTRUMENT AIR SUPPLY
- (O_2) 2 PSIG OXYGEN SUPPLY LINES

EQUIPMENT LEGEND

EOV - ELECTRIC OPERATED VALVE
FI - FLOW INDICATOR
FIS - FLOW INDICATING SWITCH
PA - PRESSURE ALARM
PIS - PRESSURE INDICATING SWITCH
PSV - PRESSURE SAFETY VALVE
TA - TEMPERATURE ALARM
TE - TEMPERATURE ELEMENT
TIC - TEMPERATURE INDICATING CONTROLLER

Fig. 8

The process level in the evaporator is maintained by pneumatic sensing with a 0- to 50-in. w.g. "Foxboro" level transmitter, LM-113, and a flow indicator, FI-231, in conjunction with a 0- to 50-in. w.g. Foxboro level-indicator controller, LIC-114. The final control device is a Conoflow level-control valve, LCV-115. During operation, FI-231 should be adjusted to allow ∿0.4 scfh of air into the bubble tube, and the control index on LIC-114 should be preset at ∿14 in. w.g., which is the desired liquid level of the evaporator. The level may be checked by observing the height as indicated by a sight glass on the evaporator.

Steam pressure to the evaporator is sensed and controlled by a 0-to 100-psig "Kieley-Mueller" pressure-indicating controller, PIC-116. The pneumatic output-control signal adjusts the "Research Controls" pressure-control valve, PCV-117, until the desired pressure is reached. The control index on PIC-116 should be set at ∿25 psig. A pressure-relief valve, PSV-311, is included in the steam supply to protect the evaporator against high steam pressures. PSV-311 is preset to relieve at 60 psig. Should a release of steam pressure occur within the enclosure, a pressure-indicating instrument with contacts is preset to instantly close the solenoid valve, when an increase occurs at minus 0.2 in. w.g., thereby controlling the flow of steam to the evaporator. At the same time, an alarm occurs at the annunciator panel. The steam condensate from the evaporator is sensed by a conductivity element, CE-127, and indicated by a 0- to 50-micromho conductivity instrument, CIS-128. The control index on CIS-128 should be preset to actuate alarm CA-269 at 15 micromhos.

The feed tanks are provided with "B/W" electrical probe-type level detectors LS-109 and LS-110, which are preset to alarm at 90% of the tank capacity (LA-262 and LA-263).

The condensate hold tanks are provided with B/W electrical probe-type level detectors LS-119 and LS-120, which are preset to alarm at ∿60% of tank capacity (LA-121 and LA-122); LA-264 and LA-265 also alarm at ∿90% of tank capacity. The steam condensate hold tank and the cooling water hold tanks are equipped with similar level-detection and alarm systems.

The vacuum chamber is provided with an 11-in. vertical sight glass, LI-152, to visually determine the tank level. No level alarm is supplied.

All alarms and instruments with control indexes are located on the panel of the main annunciator.

3. Furnace Glove Boxes

a. General

The furnace glove boxes are used primarily as enclosures in which the muffle furnaces may be loaded or unloaded. Each enclosure is maintained at minus 0.5 to minus 1.0 in. w.g., with respect to the surrounding atmosphere, to ensure containment of the contaminated air and materials inside the boxes.

There are seven glove boxes that are equipped for furnace operations. Five of these boxes use small muffle-type furnaces and two boxes have vertical-tube furnaces for the ignition of carbon salvage. These tube furnaces are located beneath glove boxes R-111A and R-111B.

b. Services

Certain boxes are appropriately equipped with a supply and return chilled-water system, oxygen supply, and 115-V, 60-cps AC receptacles. Glove boxes R-111A and R-111B are also equipped with an instrument-air supply. All glove boxes are equipped with fire-sprinkler systems.

c. Instruments and Controls

The following information refers to instrument application numbers on glove box R-111A, but is typical for the controls of all furnace glove boxes.

(1) Box pressure is controlled by the manual adjustment of a valve located on the exhaust duct. Pressure is indicated on a "Hays" diaphragm-type pressure-indicating instrument, PIS-203, having a 0- to minus 2-in. w.g. pressure range and adjustable alarm contacts. The contacts are preset to actuate alarm PA-240 at minus 0.4 in. w.g.

(2) Furnace temperature is automatically controlled by an indicating pyrometer, TIC-139, having a range of 0 to 1100°C with "ON-OFF" control action and thermocouple-burnout protection. Temperature is sensed in the furnace with a chromel—alumel thermocouple, TE-138. The instrument is also provided with a high-temperature adjustable set point for actuation of alarm TA-239. The alarm should be preset to actuate at 50°F (∿28°C) above the control set point.

(3) Controls are located adjacent to the enclosure to provide either manual or automatic furnace control. Both forms of control are interlocked with the contacts in the Fisher and Porter (0.2 to 4 gpm) flow-indicating switch, FIS-150, located in the furnace cooling-water discharge line. Furnace-temperature control is inoperable or fail-safe if the cooling-water discharge flow is less than 2.0 gpm.

Signal lights are provided to show when the cooling-water-supply solenoid valve, EOV-146, and the oxygen-supply solenoid valve, EOV-147, are open and the system is normal.

(4) All alarms are located on the panel of the main annunciator.

d. Abnormal Conditions

Furnaces are cooled by circulating chilled water. Primary controls on the burning operation relate to (1) flow rate of chilled cooling water to the furnace and (2) excessive temperature in the burning chamber.

(1) If the cooling-water flow falls below 2 gpm in the tube furnaces and if it falls below 0.1 gpm in the muffle furnaces, the chilled-water indicator light will automatically go off, the furnace power will cut off, and the furnace indicator light will go out. Oxygen will also be cut off and the panel light that indicates oxygen flow will go out.

The remedy for this situation is to determine why the flow of cooling water fell below permissible rates. Once found, the condition should be corrected and the furnace put back into operation. Inadequate operation of the chilled-water pump ordinarily is the primary cause of the problem. Other causes could be improper operation of the electrically operated valve controlling water flow to the five small muffle-furnace cooling coils or collection of dirt in the cooling water.

The two vertical tube furnaces are not equipped with solenoid valves in the water supply in order that a continuous flow of water from the emergency supply system will be maintained should the normal chilled-water system fail. The heat load in the five muffle furnaces is not considered high enough to require this emergency cooling.

(2) If the temperature in the burning chamber becomes too high, it will show on the annunciator panel and an alarm will be sounded. The cause could be failure of the temperature control to cut off the furnace at the preset level. If this occurs, the instrument should be turned off manually and an instrument mechanic called.

4. Miscellaneous Glove Boxes

Box pressure is controlled, indicated, and alarmed (see Sect. 3.c.1, p. 16). Instrument air, sprinklers, and miscellaneous services are supplied where required. (This is typical for boxes R-101A and R-101B, R-112 through R-122, R-127, and R-128.)

5. Storage Tanks

a. Level Detection

All storage tanks have either visual sight glasses or alarm devices to determine levels. The tank schedule, as follows, lists the individual devices:

Tank Number	Service	Capacity (gal)	Level Device
F-101	Nitric acid makeup tank	55	Sight glass
F-110[a]	Vacuum chamber	23	Sight glass
F-102A[b]	Evaporator feed tank	150	∿90% capacity alarm
F-102B[b]	Evaporator feed tank	150	∿90% capacity alarm
F-103A[c]	Evaporator condensate hold tank	300	∿60% and 90% capacity alarm
F-103B[c]	Evaporator condensate hold tank	300	∿60% and 90% capacity alarm
F-105[c]	Steam condensate hold tank	300	∿60% and 90% capacity alarm
F-106[c]	Cooling water hold tank	300	∿60% and 90% capacity alarm

[a]Refer to p. 12, Section C.2.c, and to LI-152 in Fig. 7 for typical application.

[b]Refer to p. 12, Section C.2.c, and to evaporator feed tanks in Fig. 7 for typical application.

[c]Refer to p. 12, Section C.2.c, and to tanks F-103A and F-103B in Fig. 7 for typical application.

b. Alarms

All alarms are located on the panel of the main annunciator.

6. Electrical Operation of the Carbon Burners

The electrical circuitry of the carbon burners provides the following control with the furnace-control switch in the automatic position (normal operation):

(1) Loss of cooling water will turn off the heating power and turn off the oxygen.

(2) Excess temperature, as indicated by the Wheelco controller on the south wall, will turn off the heating power, turn off the oxygen, and actuate the high-temperature alarms, TA-239 and TA-241, at the annunciator panel.

(3) Loss of vacuum in the glove box will turn off the heating power, turn off the oxygen, and actuate the glove-box high-pressure alarm at the annunciator panel.

After any of the above troubles have been corrected, the reset button at the furnace-control station must be pushed to resume normal operation.

7. Annunciator Panel

The annunciator panel is an electrically operated indicator board whose purpose is to visually and audibly inform the personnel in the operating area that a condition of trouble — potential or actual — exists.

Some 65 indicator lights respond to several different types of trouble and each type will be treated individually in the following pages. Indicator light numbers, location of trouble, cause of trouble, and means of correcting to a safe condition will be covered. In addition to those in the plutonium and uranium containment facility, five alarms involving the adjoining conversion and uranium laboratories (work associated with ^{151}Sm and uranium) have been added to the annunciator panel.

The following lights on the annunciator panel indicate *low room pressure*:

Light Number	Location
(1) PA-272	Chemical-process area
(2) PA-274	Calutron operations area
(3) PA-401	Equipment air lock
(4) PA-270	Components wash area

Optimum room pressure in (1), (2), and (3) is minus 0.1 in. w.g. with respect to adjacent (0.0 in. w.g.) room pressure. A decrease in room pressure to minus 0.15 in. w.g. will actuate low-pressure alarms for the respective areas. Optimum room pressure for (4) is minus 0.15 in. w.g. and a decrease in room pressure to minus 0.2 in. w.g. will actuate the low-pressure alarm for this area.

A condition of low room pressure simply means that air is leaving the room faster than it is entering. This could be caused by plugged inlet air filters, inadequate supply-fan air transfer, and poorly operating inlet dampers. Adjustment of inlet and outlet air is controlled by the General Utilities Department and any condition of low room pressure should be reported to them. Weighted dampers will open in the walls of each area, preventing room pressure from going below minus 0.3 in. w.g.

The following lights on the annuciator panel indicate *high room pressure* in the following areas:

Light Number	Location
(1) PA-273	Chemical-process area
(2) PA-275	Calutron operations area
(3) PA-402	Equipment air lock
(4) PA-271	Components wash area

Optimum room pressure in (1), (2), and (3) is minus 0.1 in. w.g. with respect to room pressure outside the controlled area. An increase in room pressure to minus 0.05 in. w.g. will actuate high-pressure alarms in these areas. Optimum room pressure in the components wash area is

minus 0.15 in. w.g., and an increase in pressure to minus 0.1 in. w.g. will actuate the high-pressure alarm for this area. If no doors are open to adjacent areas (pressure 0.0 in. w.g.), the trouble could lie in the inlet supply system, damper, or fan, or it could be caused by semi-plugged conditions in the exhaust system. Adjustment of the inlet and outlet air is controlled by the General Utilities Department and this condition of high room pressure should be called to their attention.

Signals indicating trouble due to *excessive furnace temperature* are

Light Number	Glove Box
TA-239	R-111B
TA-241	R-111A
TA-249	R-125
TA-252	R-124
TA-256	R-123
TA-259	R-128
TA-260	R-129

High-temperature water on the exhaust side of water-chiller C-106 will actuate light TA-132 on the annunciator panel. High temperature in the water at this point can be caused by improper operation of the chiller unit or by the heat load on the system exceeding the cooling capacity of the chilling unit. In either case, the General Utilities Department should be consulted.

The following lights on the annunciator panel indicate a condition of *high conductivity* (which, in turn, means that solution containing heavy elements in an acid medium is passing the conductivity monitoring station):

Light Number	Location
CA-234	Chilled water hold tank F-106
CA-269	Steam condensate line to F-105

To remedy this situation, it is necessary to determine where the process solution is getting into the chilled-water system. The most probable cause is a leak in the cooling system of the process-evaporator condenser or the evaporator into the steam condensate. *This is a very serious situation and should be reported to supervision immediately.*

In the process wash area there are four conditions that can actuate signals on the annunciator panel:

Light Number	Condition
(1) PA-226	*High pressure in liner enclosure R-101A*
(2) PA-225	*High pressure in M and E enclosure R-101B*
(3) PA-292[a]	*High pressure (discharge) at chem pumps J-101A and J-101B*
(4) PA-300	*High pressure in chem pump enclosure*

[a]This panel alarm is not actuated.

Optimum pressure in (1), (2), and (4) is minus 0.6 in. w.g. with respect to room pressure. High-pressure alarms will actuate if the pressure in these enclosures rises to minus 0.2 in. w.g.

Situations (1), (2), and (4) can be remedied by determining the cause of high pressure. If the enclosures are tightly closed and the control valve is fully opened, one must suspect the exhaust filter. Changing filters should clear up the trouble.

The following lights on the annunciator panel indicate *high pressure in the glove boxes*:

Light Number	Glove Box	Light Number	Glove Box
PA-240	R-111A	PA-251	R-125
PA-242	R-111B	PA-253	R-124
PA-243	R-112	PA-254	R-122
PA-244	R-113	PA-255	R-123
PA-245	R-114	PA-257	R-126
PA-246	R-116	PA-258	R-127
PA-247	R-117	PA-261	R-129
PA-248	R-118	PA-286	R-115
PA-250	R-128		

Optimum operating conditions consist of a box pressure of minus 0.6 in. w.g. with respect to room pressure. If the pressure rises to minus 0.2 in. w.g., the alarm is actuated. If the box pressure decreases to below minus 1 in. w.g., the situation can be remedied by adjusting the ball valve on the outlet filter to decrease the rate of exhaust from the box, thus allowing box pressure to approach optimum operating conditions. If this does not remedy the situation, change the inlet filter.

To remedy the high-pressure situation, it should be determined that the manual valve on the box exhaust system is fully opened. If the pressure remains too high, this indicates that the exhaust filter is plugged and needs replacing.

To prevent overflow, all six tanks have *high-level alarms* at ∿60% of capacity and four of these tanks have a *very-high-level alarm* at ∿90% of capacity. Their annunciator light numbers and tank numbers are as follows:

Light Number	Tank Number
LA-235 (60%)	F-106 (chilled-water holding tank)
LA-266 (90%)	F-106
LA-236 (60%)	F-105 (steam-condensate tank)
LA-267 (90%)	F-105
LA-121 (60%)	F-103A (process-condensate hold tank)
LA-264 (90%)	F-103A
LA-122 (60%)	F-103B (process-condensate hold tank)
LA-265 (90%)	F-103B
LA-262 (90%)	F-102A (evaporator feed tank)
LA-263 (90%)	F-102B (evaporator feed tank)

When alarm signals indicate that ∿60% of capacity has been reached in any tank, attention should be given to the amount of solution still to be transferred to the tank in question. If the quantity of solution yet to be transferred is enough to fill the tank above ∿90% of capacity, arrangements should be made to either transfer flow to an adjacent tank, or, if this is not possible, to discontinue flow to the tank until the tank can be emptied. All tanks, with the exception of evaporator feed tanks, will have to be sampled for plutonium content and the analysis will have to be below permissible levels before any tank can be emptied.

The following lights on the annunciator panel indicate *high pressures in enclosures*:

Light Number	Location
PA-301	R-102 (process feed tanks enclosure)
PA-302	R-103 (process condensate tanks enclosure)

Both of the above enclosures have filtered inlet air and dual exhausts through absolute filters. Pressure in these areas is set to minus 0.6 in. w.g., and an increase in pressure to minus 0.2 in. w.g. will actuate an alarm. To remedy the situation, one or both exhaust filters should be replaced by new ones. If pressure in the enclosure becomes too low, check for a plugged inlet filter or improper exhaust-valve adjustment.

Additional Alarms on Annunciator Panel

(1) PA-501: high-pressure track Kinney pump exhaust filter

(2) PA-502:[a] high-pressure conversion lab glove-box exhaust filter

(3) PA-503: high-pressure chemistry lab glove-box exhaust filter

(4) PA-504:[a] high-pressure glove-box exhaust in conversion lab

(5) PA-505:[a] high-low room pressure, conversion lab

(6) PA-506: RCWS on emergency water system

(7) PA-507: track Kinney-pump exhaust on battery power

(8) PA-508:[a] high-pressure main hood exhaust in uranium lab

(9) PA-509:[a] high-pressure No. 8 hood exhaust in uranium lab

(10) PA-510: exhaust fan off plutonium-storage area

(11) PA-511: main-area air-supply fan

(12) PA-512: high-pressure source and special nuclear materials storage area

(13) RA-100: high-level alpha exhaust stack

(14) RA-101: stack monitor inoperative

---

[a]Not directly associated with the Radioactive Containment Facility.

8. Radiation Detection Instruments for Personnel Protection, Building 9204-3

Instrument	Detector	Radiation Detected	Type	Number of Instruments		Location
Alpha or beta-gamma radiation monitor, Model Q-2091 (New Model 2277-1)	Phosphor and photomultiplier	α	Permanent (AC powered)	1		Uranium wash area
		α		1		North side of track area
		α		1		Plutonium dirty change room
		α		1		Plutonium track air lock
		α		1		Plutonium chemistry air lock
		α		1		Conversion laboratory
		α		1		Uranium laboratory
		β,γ		2		^{85}Kr separations (Track 6)
					9	
Alpha scintillation counter, Model Q-1975B-1 (New Model 2287)	Phosphor and photomultiplier	α	Portable (rechargeable by AC power)	1		Plutonium chemistry laboratory
		α		1		Plutonium wash area
		α		3		Available in HP area
					5	
Alpha proportional counter, Model PAC-3G	Proportional counter (propane)	α	Portable (battery powered)		2[a]	Available in HP area
Alpha proportional counter, Model Q-2912-1	Proportional counter (air)	α	Portable (battery powered)		2[a]	Available in HP area
Alpha proportional counter, Model PAC-4G	Proportional counter (P-10)	α	Portable (battery powered)	1		Plutonium track area
		α		1		Plutonium wash area
					2[b]	
Continuous alpha air monitor (CAAM), Model Q-2240-2R0 (ratemeter); Model Q-2218-1R0 (detector)	Phosphor and photomultiplier	α	Permanent (AC powered)	1		Plutonium chemistry laboratory
		α		1		Plutonium track area
		α		1		Conversion laboratory
		α		1		Uranium chemistry laboratory
		α		1		Plutonium wash area
		α		1		Uranium wash area
		α		1		Plutonium track area
		α		1		Glove box exhaust stack
					8[c]	
Cutie Pie survey instrument, Model Q-2299-2	Ionization chamber (air)	γ,X ray	Portable (battery powered)		5[a]	Available in HP area
Civil Defense meter, Anton Model 6	G-M tube	β,γ	Portable (battery powered)		5[a]	Available in HP area
Survey meter, Model 2610A	G-M tube	β,γ	Portable (battery powered)		1[a]	Available in HP area
Victoreen survey instrument, Model 3890	Thin window	β,γ	Portable (battery powered)		1	Available in HP area
Fast-neutron counter, Model 2047A		N_f	Portable (rechargeable by AC power)		1	Available in HP area
Thermal-neutron counter, Model Q-2004		N_t	Portable (rechargeable by AC power)		1	Available in HP area
Continuous beta-gamma air monitor[d]	G-M tube	β,γ	Permanent (AC powered)	1		Plutonium chemistry laboratory
				1		^{85}Kr separations area (Track 6)
					2	
Total Instruments					44	

[a]General survey work. [b]Operational monitoring only. [c]Two instruments are plant fabricated.
[d]Model Q-2118 (detector); Model Q-2784-1 (ratemeter); Model Q-2785-1 (alarm panel).

II. OPERATIONAL PROCEDURES

The procedures and diagrams which follow are intended to guide personnel in the safe operation of equipment within the heavy-elements containment area. These procedures will be updated on a continuing basis as revisions are needed and/or additions are made to accomplish specific separations and chemical operations.

A. HEALTH-PHYSICS AND ENTRANCE REQUIREMENTS

A full-time Health Physics representative is assigned to the area on the day shift. Among his duties are the following:

(1) Pull alpha air samples from strategic locations daily and obtain any other special samples. Arrange for counting, recording, and reporting the results.

(2) Arrange for urinalysis, whole-body count, ring films, badges, and other personnel-monitoring services.

(3) Help in surveying any potentially hazardous operations.

(4) Smear strategic areas regularly and other areas periodically.

(5) Survey equipment, burial wastes, etc., leaving the area, according to Health Physics procedures.

(6) Consult with operating personnel and supervision on any new problems involving radiation.

1. Alpha Air Monitors

Three continuous alpha air monitors (CAAM) are provided in the Radioactive Containment Facility. One monitor is located in the components wash area, one in the chemical processing area, and one in the track area. A stack monitor continuously samples and records alpha activity of the filtered exit air from the glove-box exhaust system. These monitors are set to give a caution alarm at ∿400 cpm and a high-level alarm at ∿800 cpm.

In the event of a high-level alarm (ringing bell) on the monitor, all personnel in the affected room will evacuate the area. Chemical-processing-area personnel will evacuate and monitor themselves when going through the personnel air lock to outside the west wall of the containment facility. Personnel from the components wash area will evacuate and monitor themselves when going through the equipment air lock to outside the west wall of the containment facility.

Note: There are two emergency safety equipment cabinets — one located outside the west wall of the chemistry area and the other near the track area. Equipment includes respirators, gas masks, a plastic pressurized air suit, and rubber gloves.

After evacuation, the situation will be evaluated and appropriate corrective action taken in accordance with established procedures. This should include

(1) Donning a half-mask, or preferably a full-face mask in case not already being worn.

(2) Immediate monitoring (with alpha meter) of shoes, hands, and clothing of personnel who were in the room.

(3) Notifying Health Physics and supervisory personnel.

(4) Taking corrective measures to locate and isolate the spill if activity is found (or to repair monitor if alarm is false).

2. Protective-Clothing Regulations

a. Plutonium-Wash and Track Areas

The plutonium-wash and track areas require certain regulations due to the potentially hazardous operations existing at times within these areas. Handling large equipment containing 100-200 g of plutonium enclosed in plastic bags and "bagging" this equipment into and out of the calutron tank and wash enclosures present the possibility of special hazards. Therefore, only authorized personnel are allowed in these areas. Personnel protection requires the following during handling and/or washing operations:

Minimum entrance requirements

(1) Full-face masks
(2) Rubber gloves
(3) Coveralls
(4) Company safety shoes covered by shoe scuffs (cotton-stocking type)
(5) Frequent surveying to determine if there is release of alpha activity

Exit requirements

(1) Check clothing surfaces for activity with alpha survey meter in air lock.

(2) Remove shoe scuffs, rubber gloves, and other clothing in "dirty" change room.

(3) Check skin surfaces with alpha survey meter.

(4) Clean any contaminated skin surface at special decontamination sink in dirty change room.

(5) Take shower in shower room.

(6) Don clean company or street clothes in "clean" change room.

A close check on the extent of any contamination of the area is kept by means of Health Physics smears and air samples. If contamination should occur, cleanup procedures are initiated and carried out until contamination levels are acceptable. Since the handling and/or washing operations are sporadic, there may be several weeks between campaigns of this type. After Health Physics checks have shown the area to be acceptable, the following regulations apply:

Minimum entrance requirements

(1) Full- or half-mask
(2) Cloth gloves
(3) Coveralls or lab coat
(4) Company or street shoes covered by shoe scuffs

Exit requirements

Remove protective apparel in air lock and check self with an alpha survey meter for activity.

b. Plutonium-Chemistry, Conversion, and Uranium Laboratories

Generally speaking, these areas are considered as regulated zones. Entrance regulations may vary according to the conditions which exist at any given moment. Any added precautions shall be posted at the doors.

Minimum entrance requirements

(1) Authorization to enter (i.e., employee assigned or has approval of area supervisor)

(2) Company shoes or street shoes plus shoe scuffs (alpha-survey street shoes before putting on shoe scuffs)

(3) Coveralls or lab coat over street clothes

(4) Half-mask respirator available around the neck

Exit requirements

(1) Remove shoe scuffs and deposit them in container provided.

(2) Alpha-survey hands, shoes, and sleeves of lab coat.

B. CRITICALITY

Criticality problems will depend on the particular fissionable material (and its enrichment) being run at the time. A criticality review is required, according to ORNL Health Physics procedure No. 1.5, before each new type of separation; the Criticality Review Committee chairman must be notified when new additions of feed material are put into the cycle. Form UCN-5917, "Request for Nuclear Safety Review," must be filled out and proper approvals obtained.

The equipment is not necessarily sized to ensure criticality safety; hence administrative control of batch size is exercised to maintain safe limits. Where aqueous (or hydrogen-containing) solutions are involved, these batch limits are

^{233}U, ^{239}Pu, ^{238}Pu — 250 g
^{235}U — 350 g

For further information about criticality, see also "Criticality" (p. 73).

C. OPERATION OF GLOVE-BOX EXHAUST SYSTEM

1. Introduction

It is essential that the pressure inside glove boxes is negative with respect to the pressure in the room so as to ensure the containment of radioactive materials. It is intended that the glove-box pressure be maintained at about minus 0.6 in. w.g. with respect to room pressure (which, in turn, is to be maintained at about minus 0.1 in. w.g. with respect to atmospheric pressure).

There are two glove-box exhaust fans located on the roof of Building 9204-3, which are provided with both normal and emergency power. These fans will pull a vacuum on three glove-box-exhaust headers. These headers are designated "Main No. 1," "Main No. 2," and "Alternate" (Figs. 9 and 10, pp. 30-31).

Normally the two main exhaust headers will be in use. The alternate exhaust header is intended for use during times when the main header is being cleaned or is out of service for some other reason.

Each glove box is provided with three absolute filters. Each absolute filter is covered with a prefilter. One of these combination filters is on the inlet air to each box. The other two combination filters are on the exhaust from each box. In normal operation, the south exhaust filter in each box will be in use. The north filters will be considered spares, to be used only when it is necessary to replace the normal filter or clean the main exhaust header.

The glove-box exhaust is filtered a second time by one of two exhaust-header filters which are located near the ceiling in the southeast corner of the laboratory area. The south exhaust-header filter will normally be in use. The north exhaust-header filter is to be used as a spare.

2. Normal Operation (See Fig. 10, p. 31)

Note: Exhaust fan AJ-121A or AJ-121B should always be running.

a. Have the following valves closed: 76, 78, 80, 81, 82, 83, 86, 87, 88, 89, and also each valve from glove boxes to alternate exhaust header and each crossover valve.

b. Have the following valves open: 75, 77, 79, 84, 85, and 90.

c. Have the valve to the south exhaust filter in each glove box cracked open.

d. Crack open the valve to the south exhaust filters in the wash solution processing enclosures.

e. Crack open the valve to the south exhaust filters in boxes R-117 and R-118.

f. Adjust the vacuum controller, which regulates damper AM-110, to maintain minus 6.0 in. w.g.

Note: A relief valve is provided for use on the main or alternate exhaust headers to prevent the pressure from becoming lower than minus 6.0 in. w.g. in either header.

The pressure in each glove box is to be maintained at minus 0.8 in. ±0.2 in. w.g. by manually adjusting the opening of the ball valve from the south filter. Each box is equipped with a pressure-indicating instrument having a range of 0 to minus 2.0 in. w.g. These instruments are mounted under the respective boxes, except for R-111A and R-111B which are mounted above these boxes.

3. Changing Glove-Box Filters

The glove-box filters can be expected to plug gradually over a period of time and use. As the exhaust filter becomes plugged, the pressure in the box will rise. It will probably be possible to maintain the desired pressure for some time by increasingly opening the ball valve. However, when the ball valve is 100% open and the pressure in the box can no longer be maintained at minus 0.6 in. w.g., it will be necessary to replace the exhaust filter.

A gradual decrease in absolute pressure in the box could indicate a plugged inlet filter.

a. Exhaust Filter

(1) Open the crossover valve between the main and alternate exhaust headers.

(2) Crack open the ball valve to the spare (north) exhaust filter.

(3) Note the pressure in the box. It should be possible to reduce it to minus 1.0 in. w.g.

(4) Close the ball valve to the normal exhaust filter.

(5) Replace the prefilter on the normal exhaust filter.

(6) Crack open the ball valve to the normal exhaust filter and note if the box pressure decreases.

(7) Close the ball valve to the spare exhaust filter and the crossover valve.

(8) Wash the plugged filter in dilute nitric acid and rinse water; then put it in a plastic bag for waste disposal.

(9) If the pressure cannot be controlled at the desired level in steps 6 and 7, the normal absolute exhaust filter will have to be replaced.

(10) Repeat steps (1) to (4).

(11) Remove the normal exhaust prefilter and absolute filter.

(12) Install a clean absolute exhaust filter and prefilter.

(13) Wash the plugged absolute exhaust filter as above and then place it in a plastic bag for disposal.

b. Inlet Filter

If the absolute pressure in the glove box continues to decrease although the exhaust-valve opening is not increased, either the inlet prefilter or both the inlet prefilter and inlet absolute filter are plugged.

(1) Remove the inlet prefilter and replace with a clean filter.

(2) Attempt to adjust the box pressure to minus 0.6 in. w.g. by operation of the normal-exhaust ball valve.

(3) If the box pressure cannot be controlled satisfactorily — that is, the pressure in the box will not increase to minus 0.4 in. w.g. quickly when the normal-exhaust ball valve is nearly closed — it is likely that the absolute inlet filter is plugged. Remove the inlet absolute filter and replace with a clean filter.

Note: It is possible that the surface of this absolute inlet filter that was exposed to the inside of the glove box is contaminated. Therefore, provision should be made to seal this filter in a plastic bag as soon as it is removed from the box.

4. Washing Down Plutonium Main-Glove-Box Exhaust System

Refer to Fig. 9. Valves 1 through 9 on this drawing have been renumbered from Fig. 10 for procedural simplicity.

Shut down all operations in glove boxes.

a. To wash:

(1) Open valves 1 through 4, in order.

(2) Change over glove boxes from "main" to "alternate."

(3) Close valves 6 through 9, in order.

(4) Wash down the main exhaust system by adding ∿55 gal of distilled water from the wash-area hold tank. Allow to stand for ∿2 hr, then drain out into the 500-gal tank located at the northeast corner of the building.

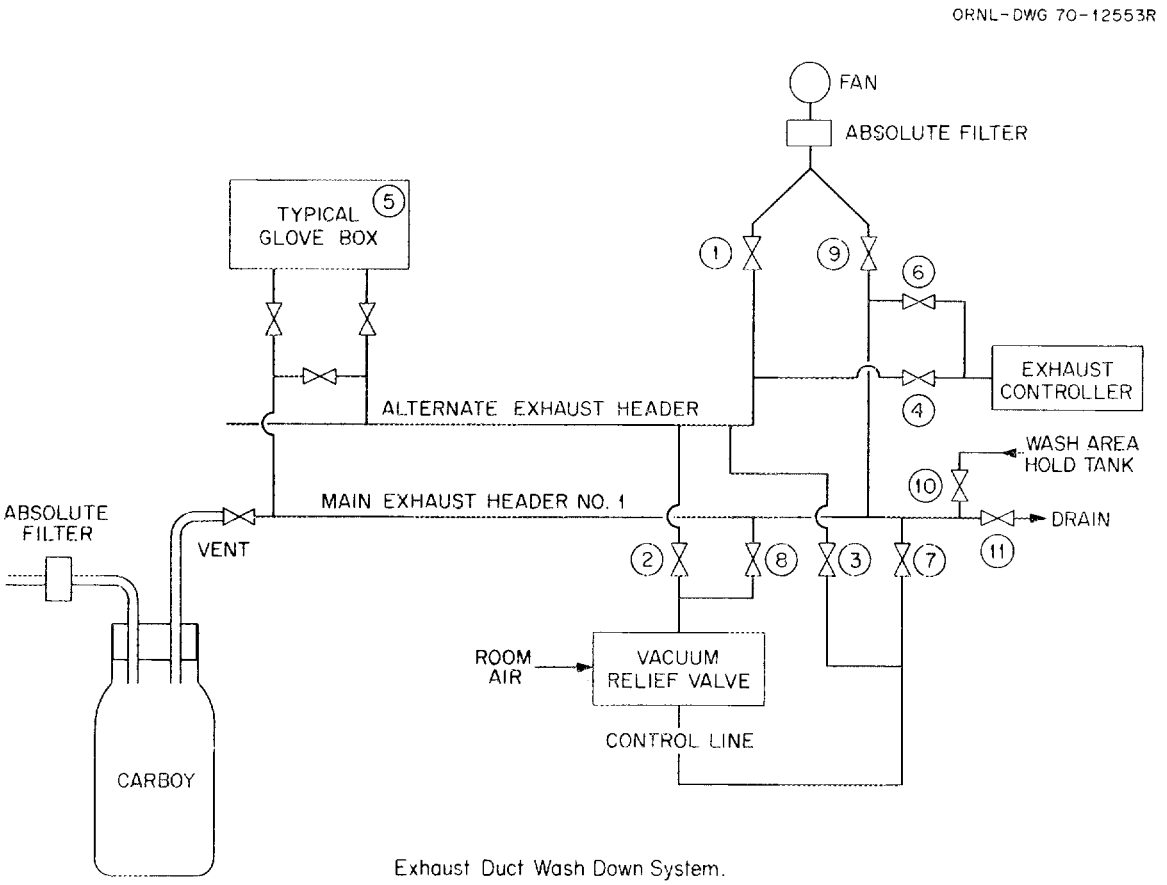

Exhaust Duct Wash Down System.

Fig. 9

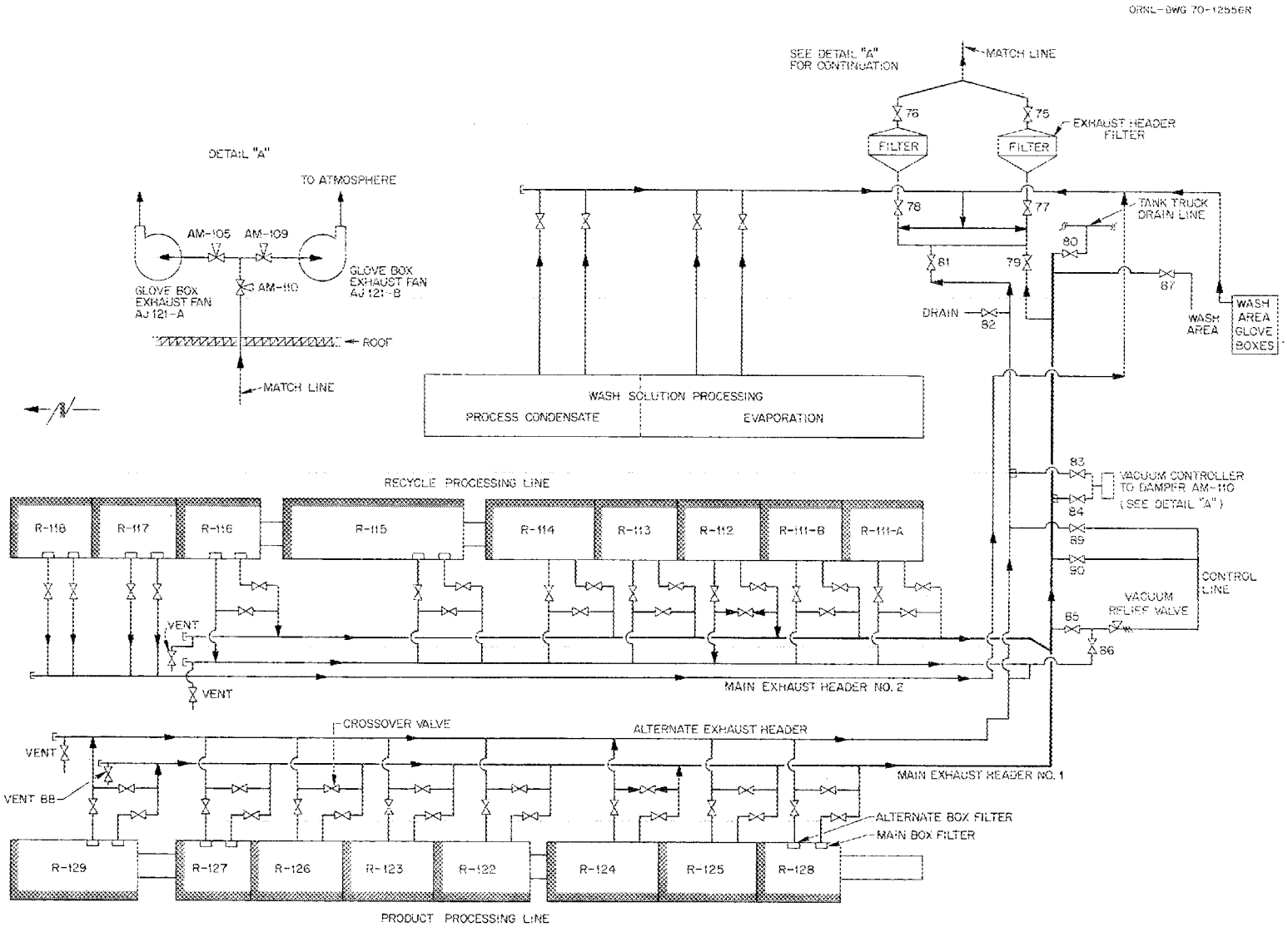

Glove Box Exhaust System.

Fig. 10

b. To get back to normal:

(1) Open valves 9 down through 6, in order.

(2) Transfer glove boxes from the alternate to the main system.

(3) Close valves 4 down through 1, in order.

(4) Change to a new main-exhaust filter before the end of the day shift.

D. TRACK AREA

The track area consists of two plutonium separators and six other separators used for other transuranium elements and for chemically toxic elements. In each tank (vacuum bin), a liner, source, and receiver ("unit") are introduced prior to separation.

1. Installing Units

The increased tank pressure due to the displacement of air as the units are introduced is relieved by a vacuum system located at the top rear of the tanks. A box containing a 24-in. absolute filter is tied to an isolated mechanical vacuum pump and may be brought to minus 30 in. Hg by opening valve 601A (Fig. 11) in conjunction with the metering valve at the tank front.

Select the proper tank by opening either valve 652 or valve 653; then open the corresponding Kerotest valve at the vacuum manifold, which will be either valve 652B or valve 653B, depending on the tank desired. Pressurization of the system is avoided by controlling passage of air through metering valve V-601A at the tank front. Upon completion of unit installation, close all above-mentioned valves and relieve any negative pressure in the filter box by opening valve AT-603 until atmospheric pressure is reached; then close valve AT-603. The mechanical vacuum pump is to be stopped on completion of unit installation in case valve V-601 should leak; the filter box should again be evacuated.

2. Calutron Tank Pumpdown and Termination

(See Fig. 12.) Note: Anytime a roughing valve is closed, it must be chained and padlocked in that position.

a. Pumpdown

(1) Close the finishing-header valve and the Chapman valve.

(2) Open the two Kerotest valves that connect the tygon tube to the forevac line.

(3) Unlock the safety lock on the roughing-header valve.

(4) Slowly open the roughing-header valve and pump through the tygon tube for one hour. This minimizes the possibility of having charge material get out of the charge bottle into the tank.

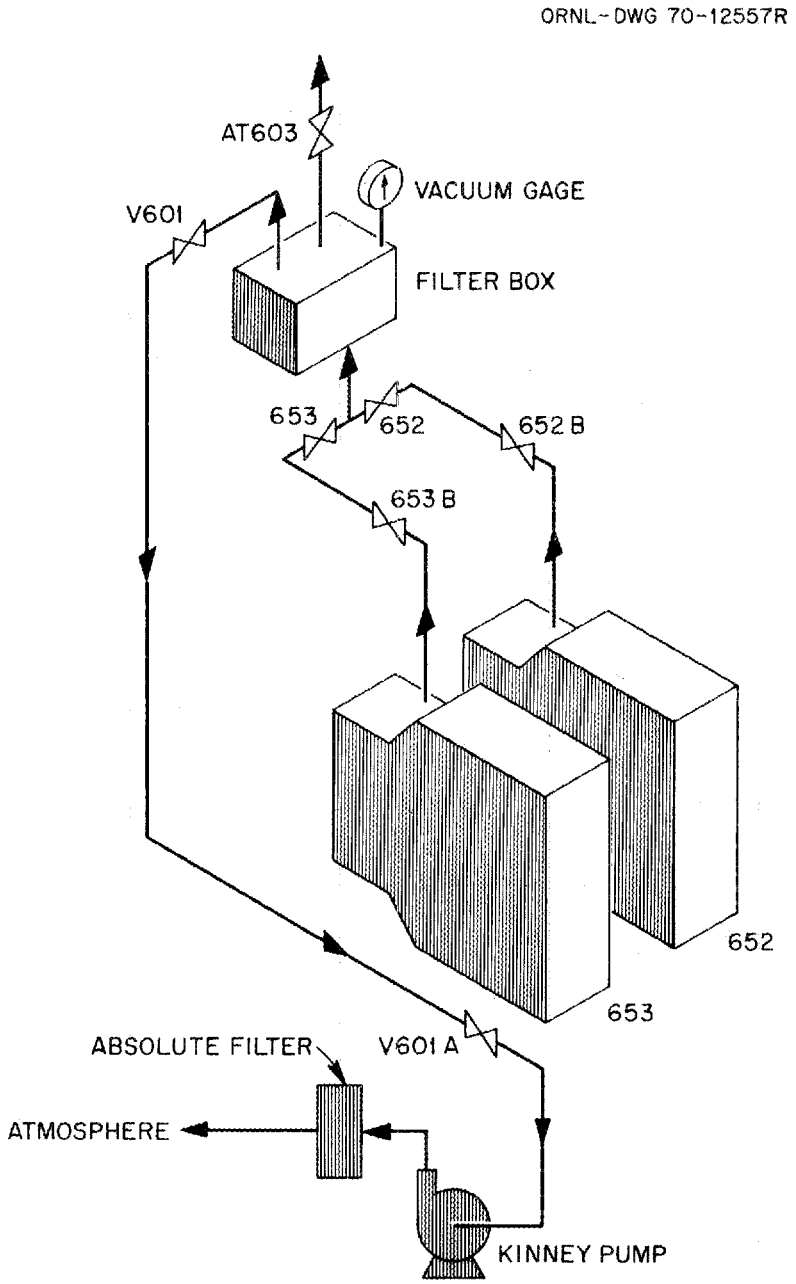

Vacuum Flow Diagram for Unit Installation.

Fig. 12

ORNL-DWG 70-12554

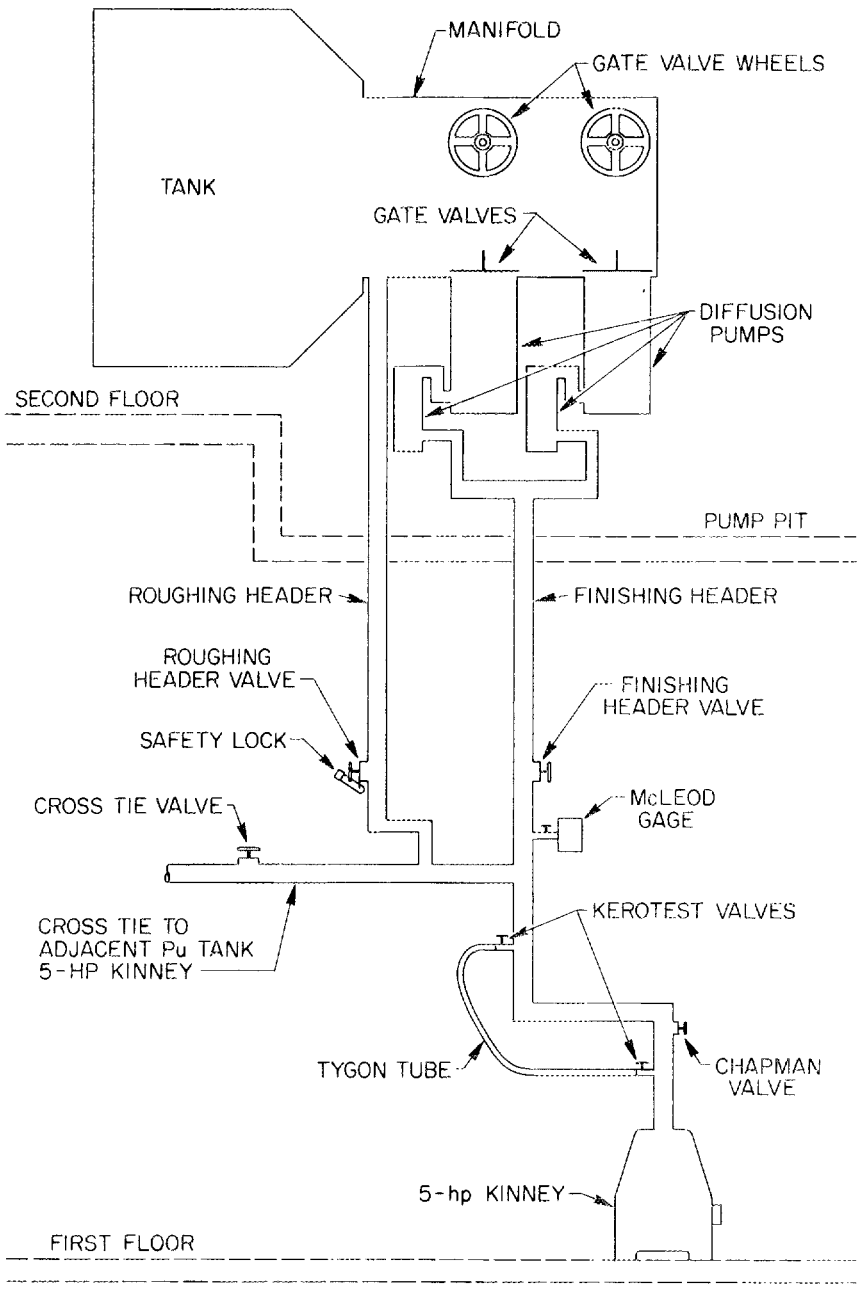

Calutron Vacuum System.

Fig. 12

(5) Open the Chapman valve and close the two Kerotest valves.

(6) When the roughing-header pressure is down to 50 microns of forevac pressure, as indicated by the McLeod gage, close and lock the roughing-header valve.

(7) Open the finishing-header valve.

(8) Put a red tag on any valve that is opened.

(9) Turn the power and water on for the diffusion pumps (in the track area pump pit).

(10) Open the gate valves.

(11) When the pressure on the Phillips ion gage reaches less than 100 μA, take a "rate of rise" to determine if the tank is tight.

b. Termination

(1) Close the gate valves.

(2) Turn off the diffusion-pump power and let the pumps cool for an hour.

(3) After the pumps have cooled, turn off the diffusion-pump water.

(4) Leave the Kinney pump pumping on the diffusion-pump system and the forevac line.

Note: To minimize error, it is the policy of the Department that two men be responsible for the pumpdown.

3. Pulling Units

(See Fig. 11.)

(1) To let a tank down to air, open valve AT-603.

(2) Now, select the appropriate tank by operating either valve 652 or 653.

(3) Open the Kerotest valve for chosen tank valve 652B or 653B.

(4) When the tank is down to atmospheric pressure (according to the pressure gage), close valve AT-603.

(5) Open valve V-601 and maintain the desired negative pressure by manipulating valve V-601A.

E. COMPONENT WASH AREA

1. Washing Liner in Glove Box

Figures 13 and 14 show the calutron component-wash and solution-flow diagram and specific wash detail system, respectively.

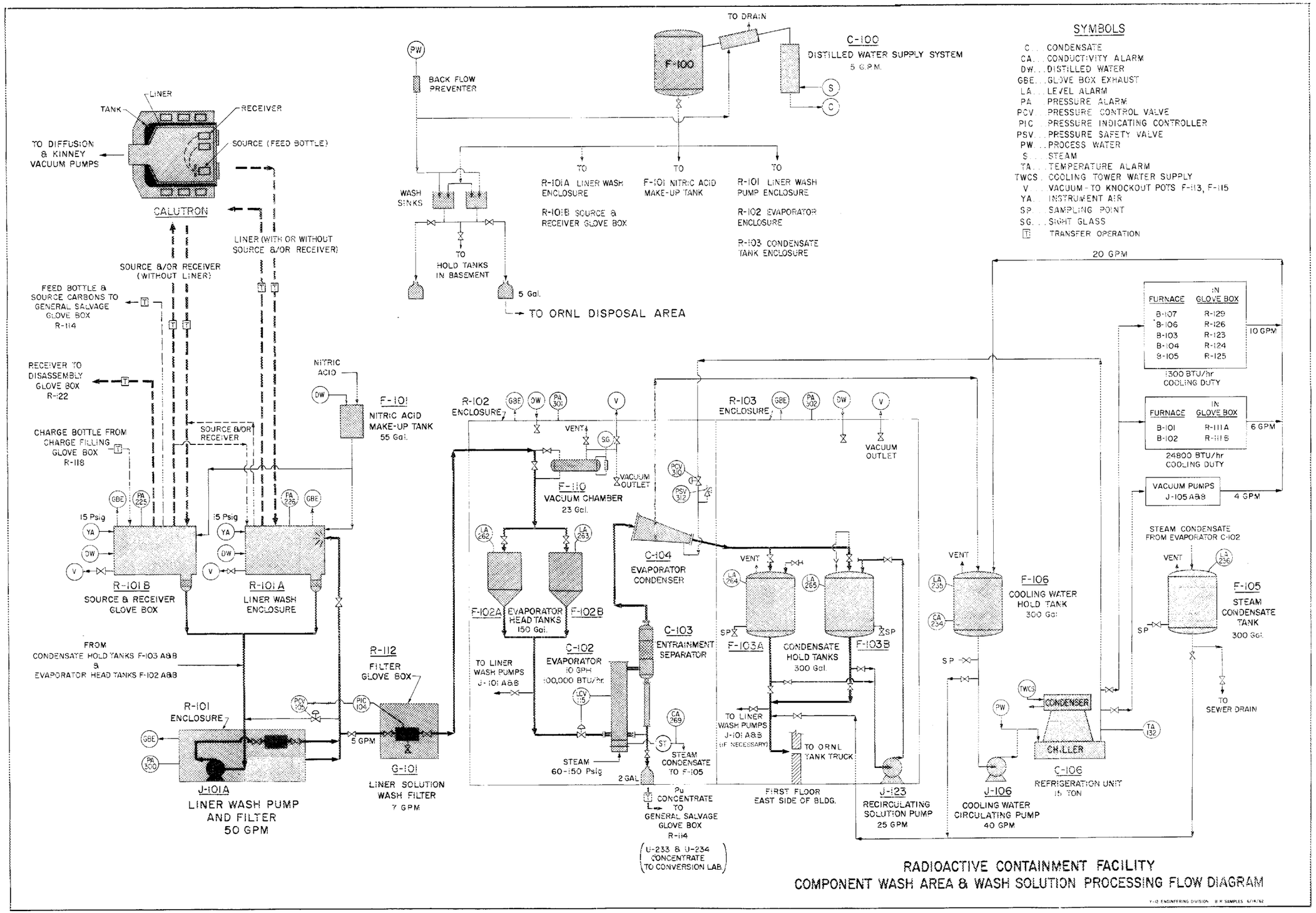
SYMBOLS
C... CONDENSATE
CA... CONDUCTIVITY ALARM
DW... DISTILLED WATER
GBE... GLOVE BOX EXHAUST
LA... LEVEL ALARM
PA... PRESSURE ALARM
PCV... PRESSURE CONTROL VALVE
PIC... PRESSURE INDICATING CONTROLLER
PSV... PRESSURE SAFETY VALVE
PW... PROCESS WATER
S... STEAM
TA... TEMPERATURE ALARM
TWCS... COOLING TOWER WATER SUPPLY
V... VACUUM-TO KNOCKOUT POTS F-113, F-115
YA... INSTRUMENT AIR
SP... SAMPLING POINT
SG... SIGHT GLASS
T... TRANSFER OPERATION
TO DRAIN
F-100
C-100
DISTILLED WATER SUPPLY SYSTEM
5 G.P.M.
BACK FLOW PREVENTER
WASH SINKS
TO HOLD TANKS IN BASEMENT
5 Gal.
TO ORNL DISPOSAL AREA
TO R-101A LINER WASH ENCLOSURE
R-101B SOURCE & RECEIVER GLOVE BOX
TO F-101 NITRIC ACID MAKE-UP TANK
TO R-101 LINER WASH PUMP ENCLOSURE
R-102 EVAPORATOR ENCLOSURE
R-103 CONDENSATE TANK ENCLOSURE
TANK
LINER
RECEIVER
TO DIFFUSION & KINNEY VACUUM PUMPS
SOURCE (FEED BOTTLE)
CALUTRON
LINER (WITH OR WITHOUT SOURCE &/OR RECEIVER)
SOURCE &/OR RECEIVER (WITHOUT LINER)
FEED BOTTLE & SOURCE CARBONS TO GENERAL SALVAGE GLOVE BOX R-114
RECEIVER TO DISASSEMBLY GLOVE BOX R-122
CHARGE BOTTLE FROM CHARGE FILLING GLOVE BOX R-118
SOURCE &/OR RECEIVER
NITRIC ACID
F-101
NITRIC ACID MAKE-UP TANK
55 Gal.
15 Psig
R-101B
SOURCE & RECEIVER GLOVE BOX
R-101A
LINER WASH ENCLOSURE
FROM CONDENSATE HOLD TANKS F-103 A&B & EVAPORATOR HEAD TANKS F-102 A&B
R-101 ENCLOSURE
J-101A
LINER WASH PUMP AND FILTER
50 GPM
5 GPM
R-112
FILTER GLOVE BOX
G-101
LINER SOLUTION WASH FILTER
7 GPM
R-102 ENCLOSURE
VENT
F-110
VACUUM CHAMBER
23 Gal.
VACUUM OUTLET
F-102A
F-102B
EVAPORATOR HEAD TANKS
150 Gal.
TO LINER WASH PUMPS J-101 A&B
C-102
EVAPORATOR
10 GPH
100,000 BTU/hr.
STEAM
60-150 Psig
2 GAL.
C-104
EVAPORATOR CONDENSER
C-103
ENTRAINMENT SEPARATOR
STEAM CONDENSATE TO F-105
Pu CONCENTRATE TO GENERAL SALVAGE GLOVE BOX R-114
(U-233 & U-234 CONCENTRATE TO CONVERSION LAB.)
R-103 ENCLOSURE
F-103A
F-103B
CONDENSATE HOLD TANKS
300 Gal.
TO LINER WASH PUMPS J-101 A&B (IF NECESSARY)
TO ORNL TANK TRUCK
FIRST FLOOR EAST SIDE OF BLDG.
J-123
RECIRCULATING SOLUTION PUMP
25 GPM
20 GPM
FURNACE | IN GLOVE BOX
B-107 R-129
B-106 R-126
B-103 R-123
B-104 R-124
B-105 R-125
1300 BTU/hr COOLING DUTY
10 GPM
FURNACE | IN GLOVE BOX
B-101 R-111A
B-102 R-111B
24800 BTU/hr COOLING DUTY
6 GPM
VACUUM PUMPS J-105 A&B
4 GPM
STEAM CONDENSATE FROM EVAPORATOR C-102
F-106
COOLING WATER HOLD TANK
300 Gal.
F-105
STEAM CONDENSATE TANK
300 Gal.
TO SEWER DRAIN
CONDENSER
CHILLER
C-106
REFRIGERATION UNIT
15 TON
J-106
COOLING WATER CIRCULATING PUMP
40 GPM
RADIOACTIVE CONTAINMENT FACILITY
COMPONENT WASH AREA & WASH SOLUTION PROCESSING FLOW DIAGRAM

Fig. 13

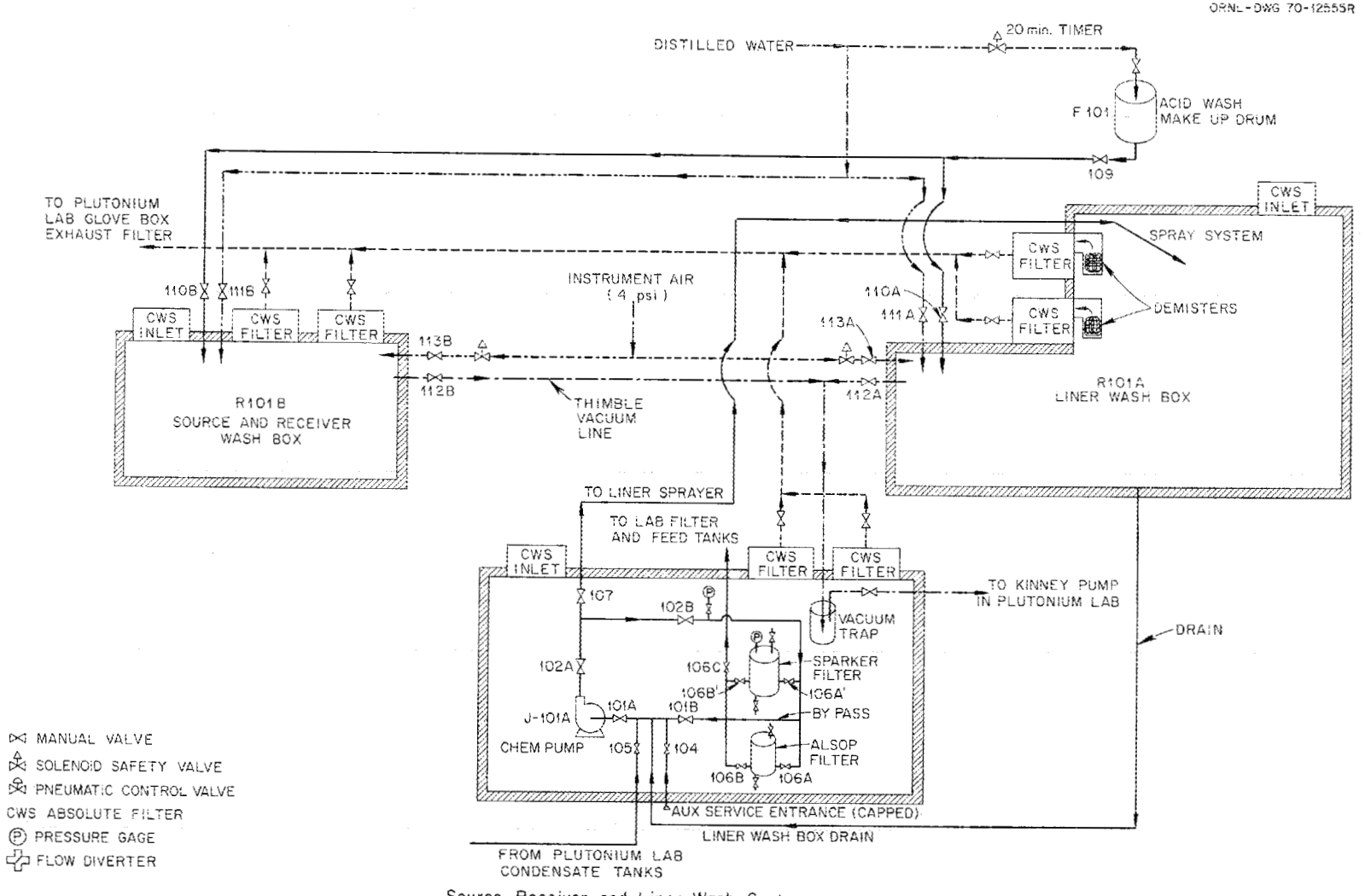

Source, Receiver and Liner Wash System.

Fig. 14

(1) Before introducing a liner into box R-101A, make sure that the inner doors are open and all gloves are in a position of safety.

(2) After the liner is secured, lower the hinged section to a horizontal position and place the spray nozzles in the topmost hook position, with doors firmly secured at top and bottom.

(3) Admit 15 gal of water into makeup tank F-101 and to this add 5 gal of 70% HNO_3.

(4) Open valves 109 and 110A and admit this solution to tank R-101A. (Valves 104, 105, and 106A, B, and C are to be in closed position.)

(5) Reclose valves 109 and 110A.

(6) Open valves 101A, 102A, and 107.

(7) Actuate the recirculating wash system by starting pump J-101A. The liner is to be washed for one hour in the two top positions and 30 min in the third and fourth positions.

2. Transferring Wash Solution to Feed Tanks

(1) When the liner wash is complete, add 20 gal of water to tank R-101A and allow the total of 40 gal of solution to recirculate for 10 min.

(2) Stop pump J-101A.

(3) Establish coordination with personnel in the plutonium laboratory for transfer of solution to feed tanks.

(4) When all is ready in the laboratory, close valve 107, filter bypass valve, and slurry-filter vent valve, and open valves 106B and 106C; start pump J-101A.

(5) Adjust the pressure to 15 psi on the slurry-filter unit by opening valves 102B and 106A.

(6) Observe the pump pressure during transfer; when the pressure drops to 5 lb, stop pump J-101A immediately and close valve 106A.

(7) Admit 20 gal of water into liner wash box R-101A for rinsing purposes. Revalve, recirculate for 20 min, and transfer to the feed tanks, following the appropriate steps under (1) and (2) above.

3. Source and Receiver Service Glove Box

The source and receiver are dismantled, washed, and reassembled in box R-101B. The desired wash solution is made up in F-101 makeup tank. Open valves 109 and 110B to admit solution to box R-101B.

4. Miscellaneous Notes

(1) At no time will both strainers be removed from their positions at the same time in either box R-101A or R-101B.

(2) The main airlock will be at minus 0.1 in. w.g. The equipment washroom will be at minus 0.15 in. w.g. Due to this difference in pressure when the large doors are opened to allow passage of equipment from the airlock into the washroom, the low-pressure signal will alarm in the wash area. The bell can be stopped at the annunciator in the wash area, but resetting the instrument after the doors are closed and eliminating the light must be done at the main annunciator in the plutonium laboratory.

(3) The installation and extraction of units in boxes R-101A and R-101B may cause an alarm because of temporary high pressure. The pressure-signal instrument must be reset at the main annunciator panel.

(4) Kinney (mechanical) pump oil must be sampled to determine its heavy-element content before disposal or in case of any unusual circumstances.

(5) All gloves and gauntlets are to be checked for leaks before installation and will be subjected to periodic checks.

(6) As part of a weekend shutdown, the calutron tanks should be isolated from all vacuum pumps by closing the finishing valve ahead of the mechanical pump. The diffusion pumps should be allowed to cool sufficiently to cut off the cooling water and relieve the pressure on the diffusion-pump baffles.

(7) Polyvinyl chloride sheet is to be taped to the floor beneath and near boxes R-101A and R-101B to facilitate any cleanup that may be necessary.

(8) All glove enclosures in the unit wash area are to be kept at minus 0.6 to minus 1.0 in. w.g.

(9) All gloves, shoe scuffs, paper, etc., used in the track area must be properly disposed of immediately after handling operations have been completed.

(10) The unit wash area is to be designated at all times as a contamination area and specified protective clothing and masks must be worn upon entry into that area.

(11) The track area is considered a contaminated area during unit handling and thereafter until pronounced clean by the health physicists on duty. During periods of handling, specified clothing and masks are required for entry into the area.

(12) The cleanup of any spill has top priority over any other operation. The specific operation involved will cease until spills are satisfactorily cleaned up.

(13) Under certain conditions, all personnel are required to shower upon removal of the protective clothing required for entry to a zone designated as a contaminated area. (See "Protective Clothing" regulations, pp. 25-26.)

F. CHEMICAL PROCESSING PROCEDURES

The so-called "heavy elements," as far as this section is concerned, refer primarily to plutonium, uranium, and thorium, with curium covered as a specialty item on pp. 57-59. Much of the work is done in what is referred to as the "plutonium" laboratory; however, in such cases, the term "plutonium" is synonymous with "heavy element."

Uranium-233, like plutonium, is an alpha emitter (2.15×10^7 dis/min/mg), and the plutonium facility is a logical processing location. In the case of ^{233}U, extra care is taken to prevent the possibility of a critical mass; only a safe amount of ^{233}U (250 g) is permitted in a calutron tank or process batch at one time. Furthermore, due to the hard-gamma radiation of the daughters resulting from the decay of ^{232}U, the plutonium laboratory is not used to process ^{233}U containing more than $\sim$2 ppm ^{232}U.

Thorium-230 is likewise an alpha emitter (4.32×10^7 dis/min/mg), so that the plutonium facility again is the logical place to do the processing. Thorium recycle chemistry is, with only a few exceptions, identical to that of plutonium. Two notable differences are (1) the single, stable +4 valence state, as compared to both +3 and +4 for plutonium, and (2) the fact that thorium nitrate is a colorless complex. On the other hand, both ThO_2 and PuO_2 require a small amount of HF for dissolution, and both load readily onto Ionac A-580 anion-exchange resin.

1. General Description

A general process-flow outline, specifically for plutonium, is shown in Fig. 15. Heavy-element (Pu, U, and Th) isotope separation is accomplished by ionizing a suitable charge material in a vacuum tank, passing the ionized beam through a magnetic field which spreads the various masses apart, and collecting the separated beams in receiver pockets.

Anhydrous plutonium trichloride has been used in the past as the plutonium charge material; however, an internal chlorination technique is now used. Carbon tetrachloride vapor is passed over heated plutonium oxide contained in a graphite charge bottle. Plutonium trichloride is formed in situ and immediately vaporizes in the vacuum of the calutron tank. Uranium and thorium are treated similarly, using CCl_4 on U_3O_8 and ThO_2, respectively.

After the mass separation has been accomplished, the unresolved material must be recycled and the separated isotope products must be recovered from the receiver pockets. Only 10 to 20% of the starting material is collected in the product pockets, while 80 to 90% of the charge is volatilized onto the liner and source and receiver parts, and must be recycled to be reused as charge material.

a. Recycle

(1) Remove the source, receiver, and liner assemblies from the calutron tank and connect to the liner-wash glove box in the wash area.

ORNL-DWG 70-14695R

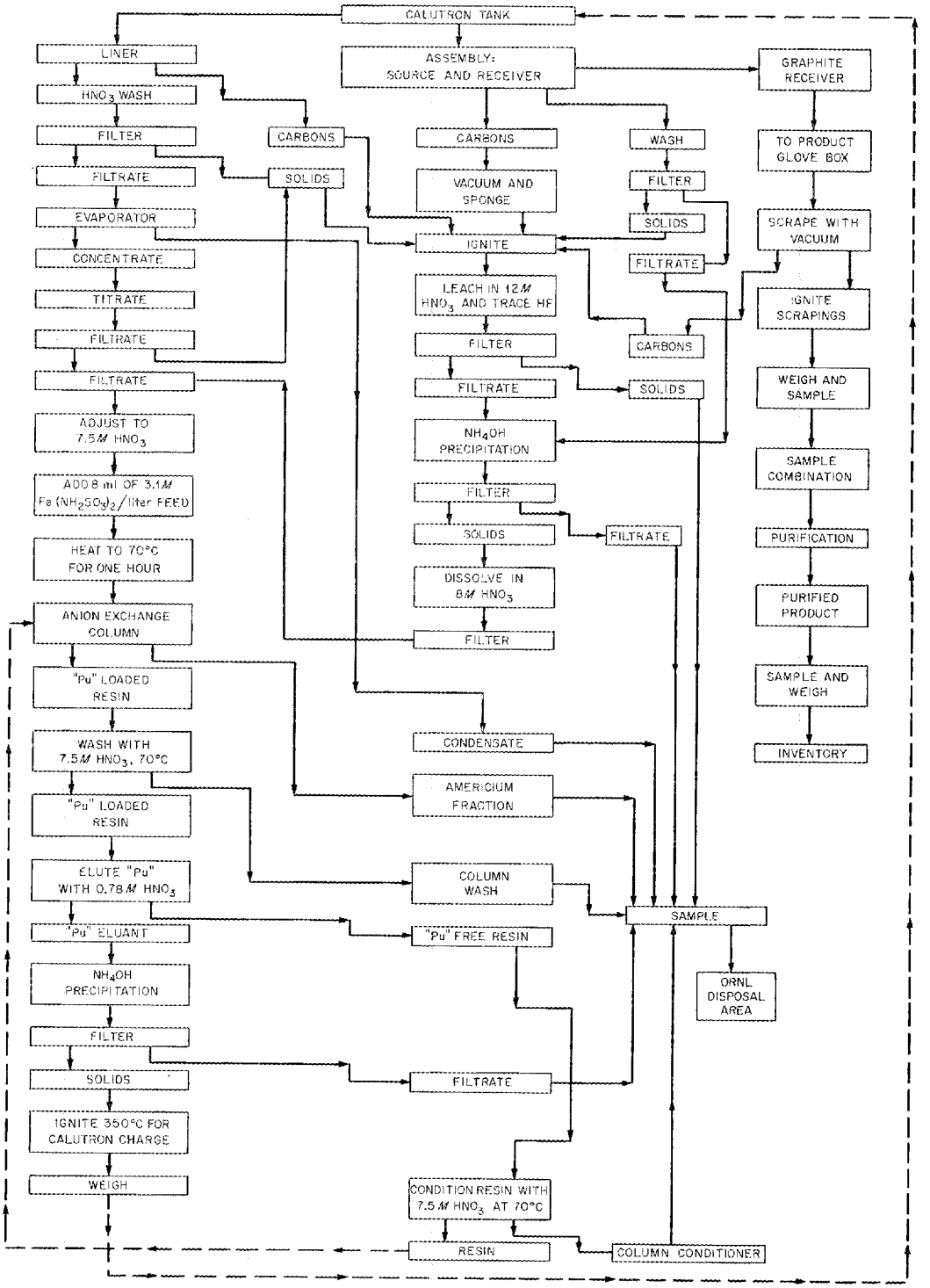

Plutonium Flow Diagram.

Fig. 15

(2) Remove the source (M) and receiver (E) assemblies individually and attach to the "M and E" wash glove box located in the same room.

(3) Wash these parts by hand, after removal of the receiver pocket, using ~4*M* HNO_3.

(4) Wash the liner by means of a recirculating pump and spray nozzles in the liner-wash glove box.

(5) Dilute the wash solutions to 2*M* acid with water and then pump through two filters, one located in the pump box and one in a glove box in the recycle line in the chemistry area.

(6) Collect the filtrate in one of two (poly)vinyl chloride-lined hold tanks located in the evaporator area.

(7) Use a water wash, following dissolution of the heavy element, to wash out the liner, pipelines, and filter.

(8) Apply a vacuum to the filter to dry the acid-resistant paper by sucking the liquid to a tank from which it can be drained to one of the feed tanks.

(9) Drain the filtrate from the feed tanks to a tantalum-lined steam evaporator where it is concentrated by a factor of about 30.

(10) Drain the concentrate into 2-gal polyethylene bottles, allow to cool, bag out of a glove port, and transfer into the general-salvage glove box (Fig. 16).

(11) Titrate the solution and adjust to 7.5*M* HNO_3; filter, heat to 70°C, and pass through an Ionac A-580 anion resin. The heavy element is adsorbed as a nitrate complex, while Fe, Cu, Al, and other impurities (such as Am in the case of Pu) are not adsorbed and pass on with the effluent.

(12) After washing with 7.5*M* nitric acid at 70°C, elute the heavy element with 0.78*M* HNO_3 heated to 70°C.

(13) Cool the pure heavy-element solution and add NH_4OH solution to precipitate the heavy-element hydroxide.

(14) Filter the hydroxide slurry, heat the solid to 450°C, and weigh. This solid can be used as a charge material by using the internal chlorination method mentioned above.

b. Product Recovery

(1) Remove the receiver pockets from the receiver assembly in the M and E wash glove box and then remove them from the box in a doubly sealed plastic bag.

(2) Transfer the pockets to the disassembly glove box (Fig. 16) in the chemistry area. The design of the receiver pocket is such that one isotope is collected on a side of a piece of graphite and another isotope on the other side of the same piece. Thus the graphite must be scraped to remove the heavy-element-bearing material. An individual glove box is provided for the processing of each isotope. Proper use

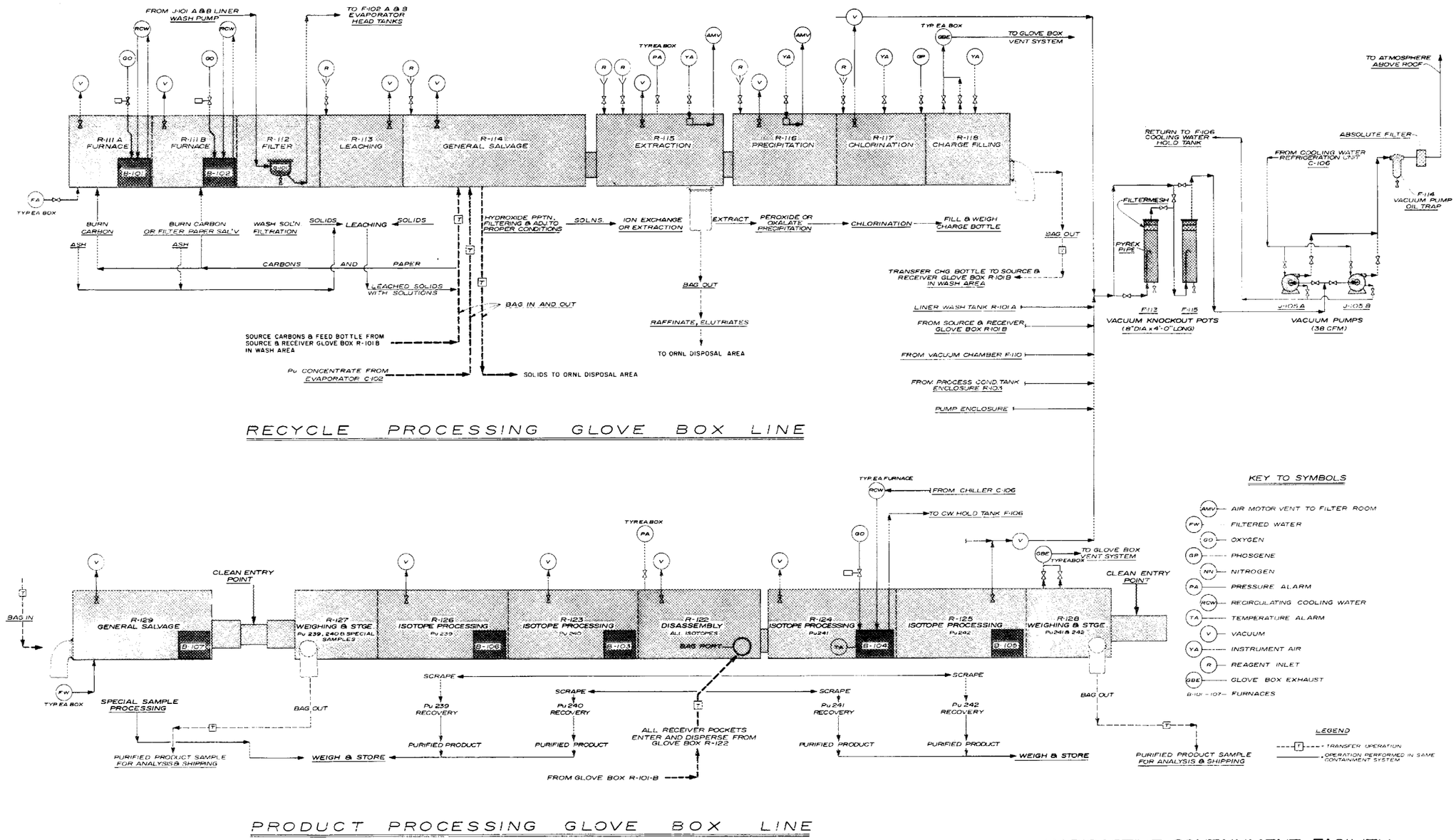

RADIOACTIVE CONTAINMENT FACILITY
Pu PRODUCT & RECYCLE PROCESSING
FLOW DIAGRAM

Fig. 16

of tape prevents cross contamination of the isotopes while the graphite surfaces are being scraped. (A tungsten carbide blade is used, which is held in a holder to which a vacuum is applied.)

(3) Collect the heavy-element oxide—graphite mixture on a paper filter, transfer to a porcelain crucible, and ignite in a muffle furnace in a stream of oxygen.

(4) Dissolve the ignited impure oxide in hot 12*M* HNO_3 which is also 0.02*M* in HF.

Note: The HF is omitted when uranium is being processed.

(5) Filter the solution and treat the filtrate with NH_4OH.

(6) Filter off the precipitate and redissolve in 1:1 HNO_3.

Note: For uranium, use special steps (7U) through (12U), following step (11), below. For thorium, use special steps (7T) through (12T), following special step (11U), p. 45.

(7) In the case of ^{241}Pu, the following anion-exchange step must be used to remove the ^{241}Am daughter before the oxalate precipitation: Filter the solution, adjust to 7*M* HNO_3, and pass through an Ionac A-580 anion resin at 60°C. The plutonium is adsorbed while the impurities pass through.

(8) Wash the column with 7*M* HNO_3 and then elute the pure plutonium with 0.6*M* HNO_3 heated to 60°C.

(9) Reduce the eluted pure plutonium to the trivalent state by adding ∿6% sulfurous acid and precipitate plutonium oxalate with saturated oxalic acid solution. Final concentration in solution: 0.2*M* oxalic acid, 0.5*M* HNO_3, and 0.15*M* sulfurous acid.

(10) Filter the plutonium oxalate on paper and ignite to plutonium oxide by heating in a muffle furnace to 650°C.

(11) Transfer the oxide to a tared glass bottle, weigh, and sample for mass analysis.

(7U) Adjust the pH of the solution to 1.8 with diluted NH_4OH for ^{235}U, ^{236}U, or ^{238}U, or, add the NH_4OH to incipient precipitation in the case of ^{233}U or ^{234}U (where glove boxes are used and the pH cannot be easily determined).

(8U) Cool to ∿20°C and add the calculated amount of hydrogen peroxide required to precipitate uranium peroxide. Readjust the pH to 1.8 when large amounts of uranium are involved.

(9U) Allow the precipitate to digest for ∿2 hr, then filter on Whatman #42 paper.

(10U) Wash the precipitate with ∿1% H_2O_2 containing ∿1% NH_4NO_3.

(11U) Transfer the paper and precipitate to a porcelain crucible; dry and finally ignite to U_3O_8 at 700°C for 4 hr in a stream of oxygen.

(12U) Transfer the oxide to a tared glass bottle, weigh, and sample for mass analysis.

(7T) Adjust the nitric acid concentration to ∿1.5*M*.

(8T) Heat to ∿50°C and add sufficient filtered saturated oxalic acid to completely precipitate thorium oxalate and to provide a final solution that is ∿0.1*M* in oxalic acid.

(9T) Allow the precipitate to digest for ∿1 hr and filter on Whatman #42 paper.

(10T) Wash the precipitate with a solution that is ∿0.1*M* in oxalic acid and 0.5*M* in HNO_3

(11T) Transfer the paper and precipitate to a porcelain crucible; dry and finally ignite to ThO_2 at 700°C for ∿4 hr in a stream of oxygen.

(12T) Transfer the oxide to a tared glass bottle, weigh, and sample for mass analysis.

2. Handling Liner Wash Solutions in the Laboratory Area

When the calutron components have been cleaned in the wash area, the wash solutions are transferred to the laboratory area for processing to recover the contained plutonium. A centrifugal pump located in the wash area pumps the wash solutions to a slurry filter* located in glove box R-112 in the laboratory area. After passing through the filter, the wash solution is piped to one of two evaporator feed tanks. These tanks can be used alternately, as can the two process condensate hold tanks. In the following procedure, valving to alternate tanks is indicated in parentheses (Fig. 17).

a. Preparing to Receive Wash Solutions

(1) Check to see that valves 12, 14 (or 13), 15, 16, 17, 20 (or 21), 23, the slurry-filter-inlet and -outlet valves, the filter-drain valve, and the vent valve are closed.

(2) Check to see that valves 11, 13 (or 14) are open.

(3) Check to see that the wash area is prepared to transfer wash solution.

b. Leak Testing the Slurry Filter

(1) Slowly open the filter-inlet valve momentarily to pressurize the filter.

Note: Care is suggested here to avoid a sudden pressure surge to the filter which might rupture the filter paper.

*"Slurry filter" refers to both Alsop and Sparkler filters.

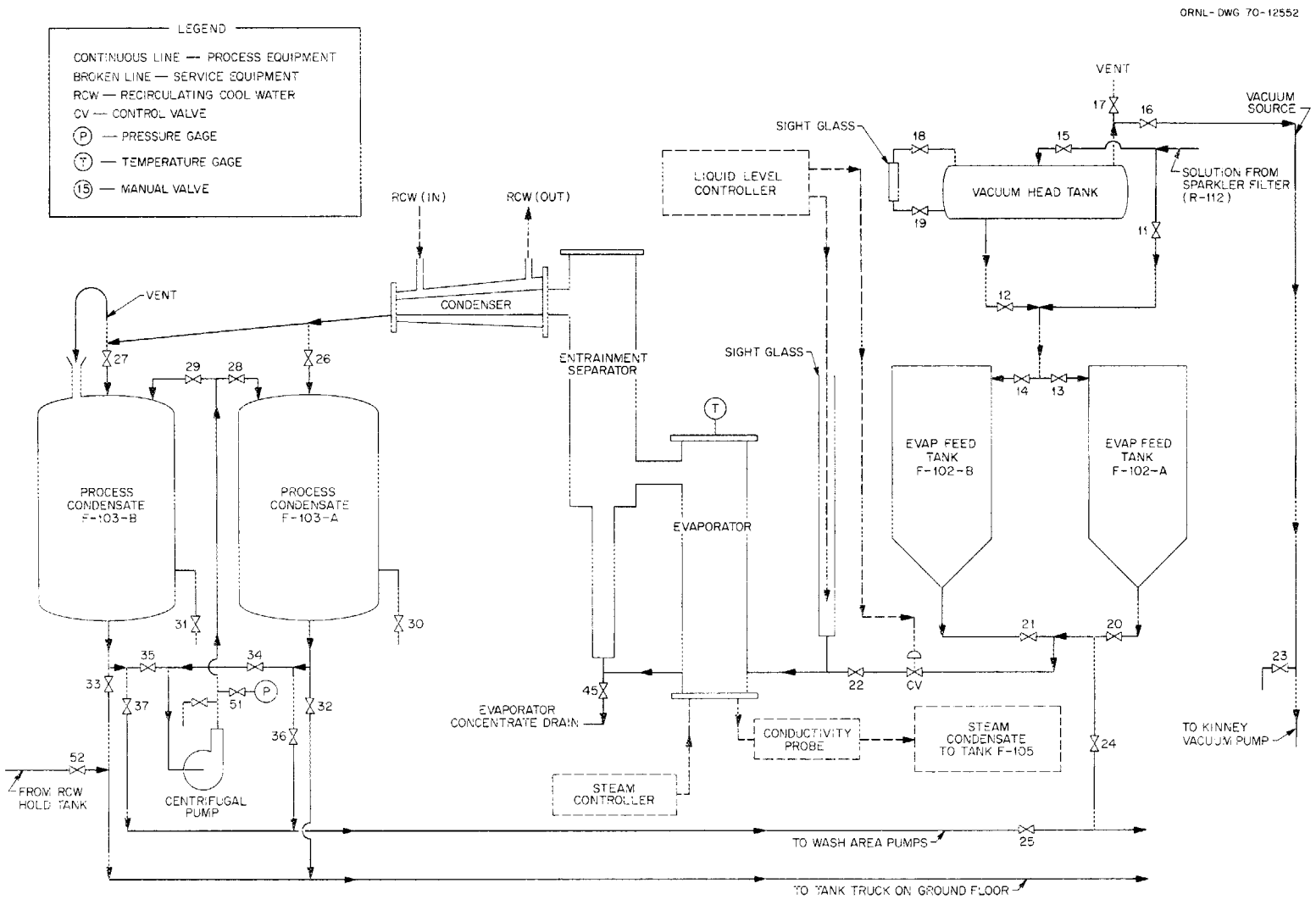

Evaporator System.

Fig. 17

(2) Close the filter-inlet valve. Observe the pressure gage on the filter. A gradual decrease in pressure indicates a leak.

(3) If leaks are evident, attempt to eliminate them.

(4) Repeat Step (1) above.

c. Transferring Wash Solutions to Evaporator Feed Tank

(1) Carefully open filter-outlet valve and inlet valves.

Note: Same precaution applies as in b.(1) above. The filtrate should now flow to the evaporator feed tank.

(2) When the sump to the wash-area pumps is as low as possible without drawing air into the pump suction, have the wash-area operator close the pump-discharge valve.

(3) Immediately close the slurry-filter-inlet valve.

(4) Have the wash-area operator use some process condensate solution; after use, transfer the flush solution as was the wash solution [i.e., steps (1)-(3)].

(5) Repeat steps (1) through (4).

d. Evacuating Slurry Filter and Lines to Evaporator Feed Tank

(1) Close valves 11, 12, and 17.

(2) Open valves 15, 18, and 19.

(3) Open valve 16 and pull vacuum on vacuum tank.

(4) Carefully crack open the slurry-filter-vent valve. This should result in evacuating the liquid in the line between the filter and the evaporator feed tank to the vacuum tank.

Note: The vacuum tank should not be allowed to become more than 75% full of liquid because of the possibility of drawing process liquid into the vacuum pumps. The liquid level is indicated in a gage glass.

(5) Close the filter-vent valve.

(6) Close valve 16.

(7) Open valve 17.

(8) Open valve 12 and allow the liquid to drain from the vacuum tank.

(9) Close valve 12.

(10) Close valve 17.

(11) Open valve 16 and the filter-vent valve; this will allow air to be drawn through the filter to dry it. It is estimated that the filter cake will dry in 3 to 4 hr.

(12) Close filter-outlet valve and valve 16.

(13) Open valve 17 to bring the vacuum tank to atmospheric pressure.

(14) Open valve 12 to drain any liquid that might have accumulated in the vacuum tank during drying of the filter cake.

(15) Close valves 12, 13 (or 14), and 17.

(16) Disassemble the slurry filter (when convenient) to process the filter cake.

e. Evaporating Wash Solution (Fig. 17)

(1) Check to see that valve 24 to the suction of the liner-wash pumps is closed.

(2) Check to see that evaporator drain valve 45 is closed.

(3) Check to see that valves 28 (or 29), 30 (or 31), 32 (or 33), 34 (or 35), and 36 (or 37) are closed.

(4) Open valve 26 (or 27) on the inlet line to the process-condensate hold tank F-103A (or B).

(5) Check to see that cooling water is circulating through the condenser. Valves 41, 42, and 43 must be open and the water-circulating pump and chiller must be operating.

(6) Open valve 20 (or 21) (evaporator feed-tank drain valve).

(7) On the instrument control panel, LIC-114 should be preset to 14 in. w.g., which is the desired level to be maintained in the evaporator. Air flow to the bubble tube is adjusted to 0.4 scfm by means of Rotameter FI-231, also located on the instrument control panel.

(8) Open valve 22 and observe the liquid level in the evaporator sight glass. Make necessary adjustments to the instruments to obtain the desired level.

(9) Check to see that steam-condensate valves 46, 47, 48, and 49 are open.

(10) Preset PIC-116 on the instrument panel to maintain valve PCV-117 closed. Open the manual steam valves on each side of the control valve.

Note: The steam-pressure-reducing station is located outside the north wall of the laboratory.

(11) Check to see that the block valve to PIC-116 in the instrument-tubing line is open.

(12) Adjust PIC-116 to admit steam at about 25 psig, or at a pressure sufficient to maintain the desired rate of evaporation.

(13) Continue to evaporate the solution until the feed tank is empty, as indicated by the feed-tank liquid-level indicator.

(14) Close valve 20 (or 21).

(15) Close valve 22.

(16) Close valve 26 (or 27).

(17) Drain the concentrate from the evaporator into the solution-transfer container by opening valve 45.

f. Disposing of Process Condensate

Before the process condensate may be drained to a tank truck, it must be determined that its radioactivity is within acceptable limits, i.e., <1 mg per 100 gal. Furthermore, the contents of the condensate hold tanks must be homogenized before sampling.

3. Recovering Liner Wash Solution

(1) Hand-wash the back of the liner, the 90° baffle, the Venetian blinds, the M and E sight glasses in the liner, and the removable copper shield located at the top of the liner, using stainless steel brushes and diluted HNO_3 solution.

(2) Wash the inside walls of the liner for ∿3 hr with a spray system using 20 gal of 4*M* HNO_3 [15 gal of distilled water plus nine bottles of 15.8*M* HNO_3 (2200 ml of acid per bottle)] containing 50 ml of 6*M* HF.

Note: The HF is omitted when uranium is being processed.

There are four positions where the sprayer is placed during the spray cycle. It is sprayed from each of the two top positions for 1 hr and 30 min from each of the two lower ones.

Note: When the liners are pulled during a series, they are usually washed twice. After a series is terminated, they are washed three times.

(3) Dilute the wash solution to about 2*M* HNO_3 by adding 20 gal of distilled water during the last 5 min of the spray cycle. One liter of aluminum nitrate [450 g $Al(NO_3)_3 \cdot 9H_2O$ per liter of water] solution is added to the 20 gal of diluting water to complex the excess HF.

Note: The aluminum nitrate treatment is omitted when uranium is being processed.

(4) Preparatory to pumping the diluted wash solution to evaporator feed tank F-102A, open the slurry-filter-inlet and -outlet valves in the slurry-filter glove box in the plutonium (heavy-element) laboratory and open the valves above tank F-102A. (Valves to the vacuum head tank and to the vacuum line are closed.)

(5) Open the valves in the pump box in the plutonium wash area and in the filter box in the heavy-element laboratory and close the spray-system main valve.

(6) With both the inlet and outlet valves to the slurry filter closed, turn on the pump and slowly open the inlet valve until the pressure gage at the slurry filter in the pump box reads 5 psi; then close the inlet valve.

Note: This provides a leak test on the filter. This slurry filter provides prefiltering prior to final filtering in the chemistry laboratory (see pump-box diagram).

(7) If a leak is not indicated, open the filter-outlet valve and slowly open the inlet valve until a pressure of 15 lb is obtained.

(8) Put new filter papers in the slurry filter at the start of each washing. If a low flow results after a time (as shown by the chemistry-laboratory feed-tank level indicator), the filter papers are clogged and must be changed. Stop the pump and change out the paper.

Note: Sometimes the filter papers have to be changed several times when a liner is very dirty.

(9) After the liner has been washed the last time, rinse it three times for 5 min each, using 15 gal of distilled water each time. Pump the first two rinses into evaporator feed tank F-102A and pump the last into feed tank F-102B.

4. Filtration

(1) The Sparkler slurry filter consists of a stainless steel housing and three sets of stainless steel disks, complete with screen. To load it with filter paper, for each set, use one disk, one screen, and two filter papers on top of the screen. Then install the stainless steel ring on top of the last paper and bolt down snugly. (DO NOT FORCE BOLTS.)

(2) Install the lid and bolt down. (DO NOT FORCE BOLTS.)

(3) To dry the filter papers after filtering the solution, evacuate the small stainless steel tank located above the evaporator feed tanks by opening the vacuum valve and closing the vent valve. Close the inlet valve to the slurry filter. Open the vent valve located on top of the slurry filter, then open the discharge valve from the slurry filter; also open the valve on the process line from the slurry filter to the small stainless steel vacuum tank.

(4) Leave the vacuum on for about 4 hr. Then close the vacuum valve and open the vent valve on the stainless steel tank to let the tank down to atmosphere.

(5) Open the drain line from the stainless steel tank to evaporator feed tank F-102B.

(6) Close the discharge valve from the slurry filter to the stainless steel vacuum tank.

(7) Remove the dirty filter papers, and ignite to oxide in the small muffle furnace; leach the ignited residue in 1:1 HNO_3 containing a few drops of HF.

(8) Filter the slurry through paper and wash the filter paper with water.

(9) Precipitate the filtered solution with 1:1 NH_4OH, filter, and dissolve in a known amount of diluted HNO_3.

(10) Adjust the acidity to 7.5*M* and combine with the source solution.

5. Evaporation

(1) The evaporator is steam-heated and has a water-cooled condenser. Be sure that cooling water flows through the condenser (check the pressure at the reducing valve next to the chiller — should be about 10 psi) and that the steam-condensate lines are open to the steam-condensate tank.

(2) Be sure that the process-condensate valves are open to one of the process-condensate hold tanks (F-103A or F-103B) located in the enclosure north of the evaporator.

(3) Open the ball valve from feed tank F-102A to the evaporator. Set the liquid-level controller at 15 in. on the annunciator panel.

(4) Set the evaporator steam pressure at 25 to 30 lb of steam, and evaporate the solution from feed tank F-102A into two equal batches of concentrate.

(5) After half of the solution has evaporated from feed tank F-102A, close the ball valve from the feed tank to the evaporator and evaporate until the liquid-level indicator shows ∿1 in.

(6) Turn off the steam to the evaporator and drain the condensate from the evaporator into a 2-gal polyethylene bottle. This should yield about 1 gal.

(7) Close the drain line from the evaporator to the polyethylene bottle and open the valve from feed tank F-102A to the evaporator.

(8) Turn the steam on; set at 25 to 30 lb steam pressure.

(9) Continue evaporation from this tank until the tank is empty.

(10) Watch the liquid-level indicator on the annunciator panel until it gets down to ∿1 in.; drain the evaporator into the polyethylene bottle.

(11) Open the valve between feed tank F-102B, containing rinse water, and feed tank F-102A. This will rinse out tank F-102A, which had previously contained the rich heavy-element solution.

(12) Open the valve from feed tank F-102A to the evaporator and evaporate this solution down to a volume of about 0.5 gal.

(13) Drain the evaporator concentrate into a 2-gal polyethylene bottle and close the drain valve.

(14) Close the valve from feed tank F-102A and open the valve from feed tank F-102B and remove the rinse water from this tank into the evaporator until the gage on feed tank F-102B reads 1 in.

(15) Close the valve from F-102B to the evaporator and evaporate until the liquid-level indicator on the evaporator reads zero. This leaves about 0.5 gal of solution in the evaporator.

(16) Turn the steam pressure off by using the controller on the panel and drain the evaporator concentrate into the 2-gal polyethylene bottle.

(17) Close the drain valve and open the valve from feed tank F-102B to the evaporator. This tank should have about 2 gal of solution left in it after the solution has drained from the feed tank to the evaporator.

(18) Close the valve from feed tank F-102B to the evaporator and let the solution stay in the evaporator.

Note: Never leave the evaporator for a long period without some solution in it.

(19) Transfer both bottles of concentrate to the general-salvage recycle box; then filter, keeping each bottle separate.

(20) Pipet a 5-ml sample from each of the 2-gal polyethylene bottles of concentrate. Titrate the acid content using standardized 1*M* NaOH solution. Use a Mohr pipet to measure the volume of titrant, taking the first permanent precipitate as the end point. The original wash solution titrates from 6*M* to 9*M* HNO_3, and the rinse titrates from 3*M* to 5*M* HNO_3.

(21) Calculate the amount of acid or water needed to adjust the acid content to 7.5*M* [see Note, step (9), p. 53] and add ferrous sulfamate to reduce all the plutonium to the +4 oxidation state. (The plutonium is reduced to the +3 state with ferrous sulfamate, but it air oxidizes to the +4 valence.)

Note: This step is not necessary when either uranium or thorium is being processed.

6. Recovery of Wash Solutions and Solids From Source Unit

(1) Disassemble the source for cleaning; take out the oven and transfer it to the plutonium laboratory for recharging.

(2) Wash (by hand) the source unit and parts, using a minimum amount of 1:1 HNO_3. Rinse with water and put the solution into polyethylene bottles and transfer (using double transfer bags) to the general-salvage recycle box.

(3) In the recycle box, filter the solution through filter paper to remove the solids; then wash the solids with water.

(4) Carefully treat the filtrate with concentrated NH_4OH in order to reduce the volume and remove impurities such as nickel and copper. Filter the slurry on filter paper, wash with very dilute NH_4OH, and redissolve in a minimum amount of 1:1 HNO_3.

(5) Carefully ignite the sponges and tissue papers from the source cleanings, as well as the filter papers containing the solids, to the oxide in the muffle furnace in glove box R-114.

Note: For uranium, use special steps (6U) through (8U), immediately following Step (9), p. 53.

(6) Leach the residue in ~12*M* HNO_3 containing a few drops of 6*M* HF.

(7) Break the used carbons into small pieces and ignite in carbon burners R-111A and R-111B; add the impure oxide residues to the 12*M* HNO_3 leach solution.

(8) After leaching the residues for 48 hr or so, dilute the leach solution with distilled water to ∿8*M* HNO_3 and filter twice through paper. Ignite the residue, grind up with a mortar and pestle, sample, and send to waste disposal for storage if the sample analysis result does not show an appreciable amount of heavy element (usually <10 to 20 mg per g of solid).

(9) Adjust the HNO_3 concentration to ∿7.5*M*. [Note: Omit this step for thorium.]

Note: Titrate the acidity of a 5-ml sample of solution with 1*M* NaOH, using a Mohr pipet. The end point is taken as that point at which permanent precipitation occurs. The necessary calculations are made and the necessary distilled water or acid is then added to obtain 7.5*M* HNO_3.

Adjust the valence of the plutonium to the +4 state, using ferrous sulfamate [$Fe(NH_2SO_3)_2$], in preparation for the ion-exchange step. (The plutonium is reduced to the +3 state with ferrous sulfamate, but it air oxidizes to the +4 valence.)

Note: Add 8 ml of 3.1*M* $Fe(NH_2SO_3)_2$ per liter of solution containing more than 1 g of plutonium per liter; add 2 ml if the plutonium concentration is less than 1 g plutonium per liter.

The solution is now ready for the anion-exchange procedure.

(6U) Leach the residue in approximately 1:1 HNO_3 for 6 to 12 hr. Filter the leach solution (use S&S 580, 32-cm filter paper), and treat the filtrate in the manner indicated in Step (4).

(7U) Break the used carbons into small pieces and ignite in the presence of a stream of oxygen in carbon burners R-111A and R-111B; leach the residue in 1:1 HNO_3 for about 12 hr and filter (use S&S 580, 32-cm filter paper).

(8U) Combine the leach solutions from (6U) and (7U) and adjust the HNO_3 concentration to ∿7.5*M*.

The solution is now ready for the anion-exchange procedure.

7. Anion-Exchange Column

Different methods of purification have been considered for processing the separated heavy-element isotopes, but the method of choice is that involving anion exchange[a] and using Ionac A-580 resin[b] in the nitrate form. Maximum adsorption is obtained using solutions that are ∿7.5*M* in HNO_3[c] and at a temperature of 60 to 70°C. However, uranium is not adsorbed as well as plutonium or thorium.

The ion-exchange column is a glass column, 3 in. in diameter and about 18 in. high, which contains ∿2.5 liters of Ionac A-580 anion resin. It has a loading capacity of about 95 g of heavy element. New resin is converted from the chloride to the nitrate form before use.[d] Two of these columns are used in the case of uranium processing.

(1) To condition the resin, heat 3 liters of 1:1 HNO_3 to ∿70°C and pump it through the column at this temperature.

(2) Adjust the heavy-element solution to 6*M* to 8*M* HNO_3 at about 70°C and pump it through the column to load the heavy element and remove impurities such as Ni, Cu, and Fe.[e]

Note: Solutions that contain more than 1 g of heavy element per liter are pumped through the column at a rate of ∿1 liter/hr (∿0.4 ml/min/cm^2). Solutions containing less than 1 g per liter are pumped through at ∿ 2 liters/hr.

---

[a] J. L. Ryan and E. J. Wheelwright, "Recovery and Purification of Plutonium by Anion Exchange," *Nucl. Technol.* 51(1), 60-65 (1959).

[b] Ionac A-580 (Permutit SK) is a coarse (20- to 50-mesh) resin and is a polystyrene quaternary amine containing pyridinium groups. It does not soften or swell appreciably and is very resistant to HNO_3 and to radiation damage. It is excellent for the purification of plutonium and thorium and fair for uranium.

[c] There is very little change in the distribution coefficient of solutions in the 6*M* to 8*M* HNO_3 range. Use the molarity that will give the smallest final volume, since the loading efficiency is improved when the volume is minimized.

[d] In a 4-liter beaker, wash 3500 ml of resin clean of fines with distilled water; wash three times with hot 3*M* HNO_3; wash three times with hot 8*M* HNO_3; and rinse three times with distilled water. Use one liter of solution per wash. Make a silver nitrate test for chloride to ensure complete nitrate conversion.

[e] To provide maximum loading in the case of uranium, the solutions most concentrated with uranium are run last; for the second and third column runs, this means the column-wash solutions. The uranium nitrate complex and Ionac A-580 resin are both yellow, which makes the column work difficult because there is not enough contrast to observe visually the extent of uranium loading on the column.

(3) After the heavy element has been loaded onto the column, wash the column with 6 to 7 liters of ∿7.5*M* HNO_3 at 70°C.

Note: When the ion-exchange involves uranium, wash the loaded columns with ∿7.5*M* HNO_3 until the impurities have been removed. Treat samples of the wash effluent with NH_4OH to determine when the washing has been completed. (A column is considered free of impurities when the sample precipitated is yellow or there is no precipitate.) Save the wash effluent containing uranium and a small amount of iron and other impurities for special processing. The NH_4OH precipitate of this solution is an amber color.

(4) Elute the heavy element from the column with ∿0.75*M* HNO_3 at 70°C.

Note: (a) Plutonium polymer formation in the resin phase and incomplete stripping occur when the eluant used is less than ∿0.6*M* HNO_3.

(b) Because the thorium nitrate complex is colorless, spot checks of the effluents from the columns must be made to determine the extent of elution. This is done by taking small samples of the effluents (∿10 ml each), diluting with distilled water, and making ammoniacal. If thorium is present, it will be visible as a white precipitate.

(5) Carefully add concentrated NH_4OH to precipitate the heavy element in the eluate. [Plutonium nitrate is brown and its hydroxide green; uranium nitrate and the precipitate, $(NH_4)_2U_2O_7$, are both yellow. Thorium nitrate and hydroxide are both white.]

(6) Filter the precipitate on S&S 580, 32-cm filter paper and wash with distilled water containing a trace of NH_4OH.

(7) For plutonium and thorium, drain the precipitate well; then place it in a porcelain crucible and ignite in a muffle furnace to the heavy-element oxide. The temperature of the furnace is maintained at ∿500°C.

Note: For uranium, ignite the precipitate at a temperature of 800 to 900°C for 8 hr, leach in 2*M* HNO_3 for several hours, and filter on Whatman #40, 32-cm filter paper to remove the iron. Treat the filtrate with concentrated NH_4OH and filter off the precipitate (use S&S 580, 32-cm filter paper). When the precipitate has drained, put it into a porcelain crucible and ignite in a muffle furnace to U_3O_8 at a temperature of ∿500°C.

(8) After the oxide has cooled, transfer it to a tared bottle and weigh (PuO_2; U_3O_8; ThO_2).

(9) Take a 3-ml sample of each acid liquid waste and submit to the ORNL Analytical Laboratory for an (Pu, U, or Th) analysis before discarding. Take a composite sample of the NH_4OH filtrates.

(10) Rework any solutions containing more than 20 mg of heavy element per liter.

8. Determining ^{235}U Content by Gamma Spectrometry (Francis-Bell Single-Channel Spectrometer)

Note: Read the entire procedure before starting the instrument.

(1) Turn on the POWER switch on the spectrometer and scaler. Allow to wram up a few minutes.

(2) Turn on the COUNT switch on the spectrometer. Check the settings: ENERGY DIAL at 184, GAIN at 32, and CHANNEL WIDTH at 10.

(3) Check the high-voltage setting by turning the METER SCALE switch to the H.V. setting. Read the high voltage on the lower scale of the meter. If it reads ∿800 V, the setting is OK; otherwise use a screwdriver on COARSE HIGH VOLTAGE ADJUST to give ∿800 V.

(4) Allow the spectrometer and scaler to warm up at least 4 hr. (If they have been off for a long time, it may take even longer for the spectrometer to stabilize.)

(5) Push the RESET button on the scaler. Put the switch on 60-CYCLE TEST.

(6) Take a 5-min count on the scaler by pushing the black START button on the preset timer. If the count is very close to 18,000, the test is OK. Return the switch to the USE position.

(7) Check the background on the spectrometer by taking a series of counts with no sample in the counter well.

(8) If the background is satisfactory (the background will vary depending on the material stored in the vault and/or in-process in the uranium laboratory), place a standard in the counter well — usually use 50.5 mg ^{235}U standard — to "peak" the instrument.

(9) Peak the instrument with the standard, using the FINE high-voltage-control knob and observing the needle position on the count-rate scale. Adjust the dial about 5 divisions at a time and allow the needle to stabilize before adjusting further (about 20 sec). When the needle on the count-rate scale is at the highest reading obtainable by adjusting the voltage, lock the knob on FINE high-voltage adjust.

(10) Reset the scaler and take a few 5-min counts with the 50.5-mg standard. If these counts are in the correct range (∿75,000 counts per 5 min), proceed with the samples. If not, repeak the instrument or obtain help.

(11) Run several background counts.

(12) Note: Preweighed or aliquoted samples must be in small glass vials. These are covered with plastic before putting in the sample well. Liquids or solids can be used.

Place the first sample in the well and take two or three 5-min counts.

(13) Observing the range of counts, choose the standard closest in range and run two 5-min counts on it (∿1500 counts per 5 min per milligram).

(14) Calculate the amount of ^{235}U in the sample by subtracting the average background count from both standard and sample counts and then use a simple algebraic proportion: If x = amount of ^{235}U in the sample, s = amount of ^{235}U in the standard, c_1 = net count rate of the sample, and c_2 = net count rate for the standard, then

$$x/s = c_1/c_2 \ .$$

(15) Proceed to run the other samples in the same way, checking the standards occasionally to be sure that the instrument is not drifting off peak.

(16) When all samples are complete, be sure that all data are recorded in the record book. If use of the spectrometer is not anticipated for some time, turn off all switches; otherwise turn the spectrometer COUNT switch off but leave the POWER switches on.

9. Curium Product Recovery

Sufficient calutron equipment has been modified to permit its limited use for separation of small amounts of curium isotopes.

In the initial runs, the calutron charge bottle, loaded at ORNL's TRU Facility with about 100 mg of curium feed, entered the doubly contained special separations area; there the bottle was bagged into a service glove box, utilizing portable shielding, and attached to a 1/4-in. by 6-ft tube that served both as an insertion tool and as a means for passing CCl_4 into the ion source. Transfer of the bottle to the installed ion-source assembly was made under alpha containment by means of an air lock on the exterior of the ion source. In removing the used charge bottle at run termination, the above procedure was reversed.

Upon completion of a run, the ion receiver was withdrawn through an air lock and transferred to the service glove box under alpha containment. There the receiving pockets for curium isotopes from ^{244}Cm to ^{248}Cm were disengaged from the receiver support structure and transferred behind improvised shielding to a nearby chemical-recovery glove box. For subsequent runs, new ion-receiving pockets were attached to the receiver assembly and returned to the calutron by the reverse procedure. Radiation background was checked frequently at designated positions on the calutron to determine the activity being emitted from within the machine and to ensure integrity of the equipment.

When the activity level approached 50 mr (mrem per hour) 3 ft from the work area, the calutron was spray-washed under containment (in-situ system — see Fig. 18) with 20% HNO_3 solution by use of a recirculating pump. The washing continued until the radiation background was lowered to about 10 mr 3 in. from the outside surface of the separator. The wash solution was shipped in an approved radioactive-material shipper to the TRU Facility where it was processed for material recovery. Alpha containment associated with curium was governed by the procedure used for plutonium separations (pp. 40 ff). The neutron and gamma radiation dosage was predetermined by monitoring the area and was controlled by time, distance, and temporary shielding.

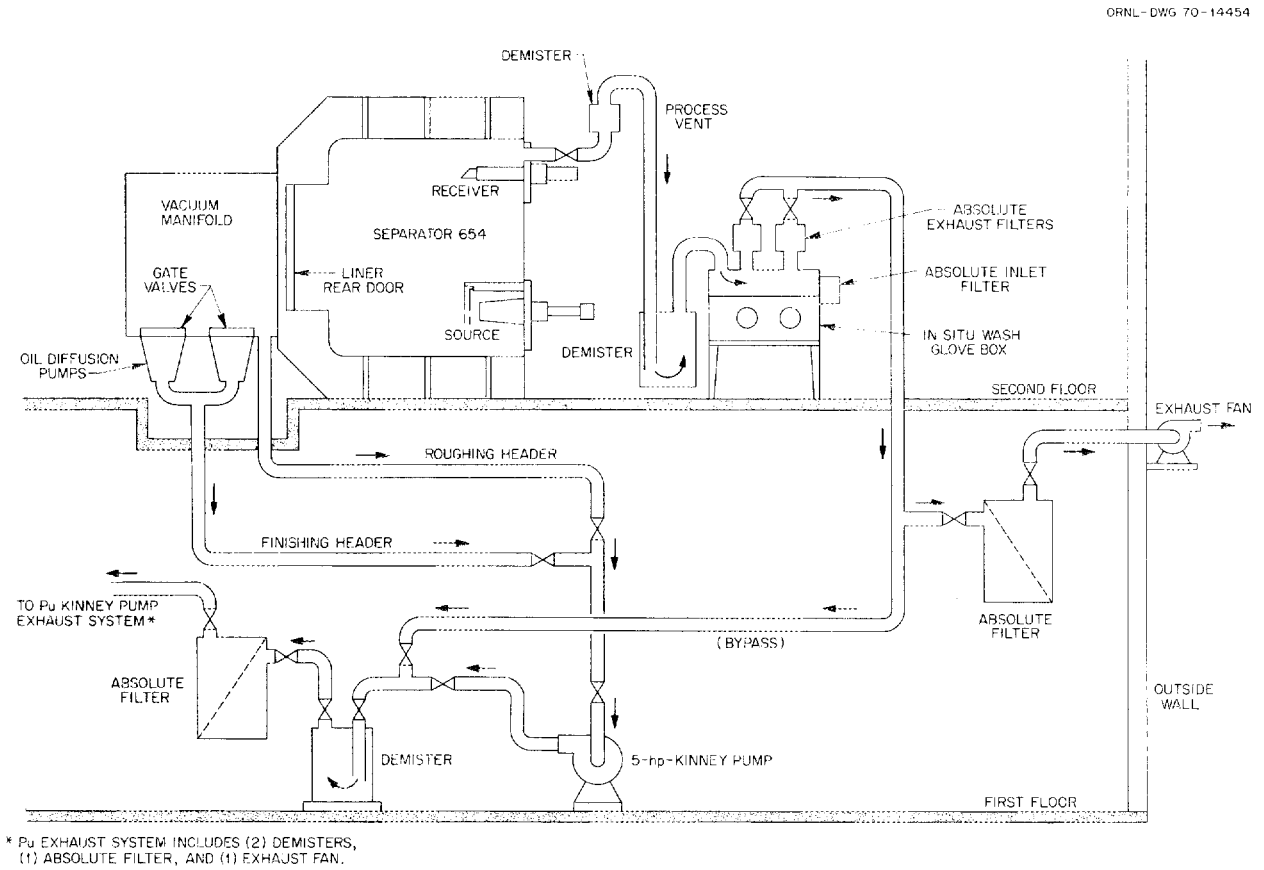

Curium Separator Vacuum and in Situ Wash Vent System.

Fig. 18

According to the measured radiation intensity of the curium feed material, it was estimated that more than 100 mg could be processed safely; this assumption was confirmed by measurements made during use of the first 100-mg charges. Subsequently a 700-mg charge was handled. For this run, background readings were monitored and a handling time of 5 min resulted in exposures well within tolerance; the highest dose reading was 55 mr neutron exposure to an operator's left hand.

The successful processing of limited charges (100 to 700 mg) under ill-suited conditions offers evidence that separation of curium could be managed quite routinely in the proposed second containment area.

a. Handling of Curium Isotopes Receiver

The receiver arrives inside a stainless steel box which acts as a shield for beta and weak-gamma radiation. This box and the enclosed receiver are inside a vinyl bag.

(1) Bag the entire package into the disassembly glove box (in front of the steam-condensate tank).

(2) Remove the receiver from the stainless steel box and disassemble the individual isotope pockets. During the operation, use a lead-filled glove for the left hand as much as is feasible when holding the receiver. Use the right hand to operate screwdriver, forceps, cutting pliers, etc., during the disassembly operation. Also, use lead foil (about 0.010 in. thick) on the front side of the receiver to minimize radiation exposure.

(3) As the individual isotope pockets are removed, place them in small polyethylene bags and tape them shut. (This does not apply to the highly radioactive ^{244}Cm pocket, which should be wrapped first in aluminum foil and then in lead foil. Aluminum foil serves for containment and lead foil for shielding.)

(4) Transfer the individual isotope pockets in the small polyethylene bags to the general-salvage-product glove box, R-129; store the highly radioactive ^{244}Cm pocket in the disassembly box; bag the metal receiver parts and send then to waste disposal.

(5) In the general-salvage-product box, open and scrape each isotope pocket; vacuum the scrapings into a paper extraction thimble.

(6) Transfer the extraction thimble to a small crucible and ignite it for a minimum of 40 hr at 700°C in a muffle furnace with oxygen flow.

(7) After it is cool, remove the crucible from the furnace; add about 1.0 to 1.5 ml of concentrated HNO_3 to the crucible, cover with a watch glass, and leach on a hot plate at incipient boiling for a minimum of 4 hr.

(8) Transfer the leachings, along with undissolved residue, into a one-half-ounce plastic bottle, calibrated for 10-ml volume. Use a medicine dropper for this operation and rinse with water. Dilute to the 10-ml volume with water.

(9) Take a sample for assay and alpha-pulse analysis as follows: pipet 0.025 ml (25 μl) of solution [from Step (8)] into a vial containing 2.0 ml of 1.0*M* HNO_3. Bag the sample, can it, and send it to ORNL Analytical Chemistry.

III. EMERGENCY PROCEDURES

A. POWER FAILURE

The containment of heavy elements are ensured by handling them in glove boxes located in rooms maintained at less than atmospheric pressure.

Both normal and emergency power are provided to glove-box exhaust fans AJ-121A and AJ-121B; general-area exhaust fan AJ-113 (or AJ-114, by manual transfer); wash-area exhaust fan AJ-109; the annunciator panel; the Spurling fire-alarm system; air-sampling motors J-124, -125, -126, and -127; the criticality monitors; the emergency lights; the alpha monitor on the process exhaust stack; the in-situ glove-box exhaust fan; and the building public-address system.

Both normal and emergency power is also provided to the glove-box exhaust fans AJ-1 and AJ-2 in the conversion lab.

In the event that normal power fails, the emergency gasoline-powered motor-generator will start and supply power to the equipment listed above through a preprogrammed timer switch.

Emergency lighting is provided in each room.

The Kinney-pump exhaust fan is supplied with emergency power from batteries.

The pump which recirculates cooling water will not operate if the power fails; therefore, cooling water will not circulate through the condenser of the evaporator. If evaporation is in progress during a power failure, the steam should be cut off immediately. Normally the steam will be automatically cut off due to momentary loss of negative pressure (in the evaporator and feed-tank enclosures) by the system which was added to ensure containment in the event of a rupture of any components containing high-pressure steam.

Cooling water will be supplied to the carbon burners and small muffle furnaces by hydrostatic head from the filtration plant. The cooling-water hold tank is dumped to the basement storage tank.

If carbon burning is in progress, the oxygen to the carbon-burning furnaces will be cut off.

The Kinney vacuum pumps will stop. The pumps should be isolated and brought to atmospheric pressure to prevent oil being forced back through the suction line.

1. Plutonium-Chemistry Area

In case of power failure:

(1) Check to see that negative pressure is maintained on the glove boxes and enclosures in the plutonium-chemistry lab and conversion lab. (The gasoline-powered emergency motor-generator at the northeast corner of the first floor should supply power to the glove-box exhaust fans. Get electrical help if difficulties are encountered.)

(2) Turn off the steam-operated evaporator in the plutonium-chemistry lab, if this is running, by turning the steam control to zero at the annunciator panel, and turning off the manual steam-supply valve on the outside of the lab (north wall). Close the head-tank supply valve to the evaporator. The evaporator will not be running on weekends.

(3) Isolate the Kinney pumps in the plutonium lab and momentarily vent to the atmosphere. Then close the vent.

(4) Check the recirculating-cooling-water system in the plutonium-chemistry lab.

Upon failure of normal power, all electrically supplied systems will stop and the gamma-radiation criticality monitors will indicate this failure at the Plant Shift Superintendent's office.

The emergency motor-generator at the northeast corner of the first floor (in the small adjoining room outside the northeast rolling door) will start and the following equipment will operate:

(1) Plutonium-glove-box exhaust fan AJ-121A or AJ-121B (plutonium-chemistry lab)

(2) General-plutonium-area exhaust fan AJ-113 (or AJ-114, by manual transfer)

(3) Plutonium-wash-area room-exhaust fan AJ-109

(4) Glove-box exhaust fan AJ-1 or AJ-2 (conversion lab, first floor)

(5) Criticality gamma-radiation monitors

(6) Annunciator panel in the plutonium-chemistry lab

(7) Room-air sampling motors (all locations except the plutonium-storage room)

(8) Spurling fire-detection system

(9) Alpha monitor in the process-exhaust stack

(10) Emergency-lighting system

(11) Bell Telephone public-address alarm and paging system

(12) Kinney-pump exhaust fan (west of conversion lab). Alarm will need silencing since this is powered from the emergency battery system in building.

(13) In-situ glove-box (track) exhaust fan

(14) Emergency recirculating-chilled-water system (RCWS)

The following equipment normally in operation will not operate during a power failure:

(1) Plutonium-general-area exhaust fan AJ-114 (except by manual transfer from AJ-113)

(2) Plutonium-room-air supply fan AJ-112

(3) Kinney vacuum pumps in the plutonium lab and track area

(4) Recirculating-cooling-water pump and chiller in the plutonium lab

(5) Refrigeration and pump J-121 for plutonium-area cooling

(6) Conversion-lab room exhaust fan

(7) Continuous alpha air monitor (CAAM) units

(8) General lighting

(9) Plutonium-storage-area exhaust fan

(10) Uranium-lab-hood exhaust fan

(11) Panel "C" (muffle furnaces, etc.) (at electrical panels adjacent to uranium wash area, second floor).

To transfer to normal power:

(1) Push the reset button on the transfer switch (at the electrical panels adjacent to the uranium wash area, second floor, outside the west wall of change facility).

(2) Push the reset button for panel "C."

(3) Reset the annunciator panel.

(4) Start the refrigeration pump J-121 (basement).

(5) Start the conversion-lab room-exhaust fan (first floor in front of column M-41).

(6) Start the plutonium-storage exhaust fan in the basement (first floor near column M-39).

(7) Start the source and special-nuclear-materials-storage exhaust fan (basement; switch on south wall of the conversion lab).

(8) Check the emergency motor-generator to see if it has stopped (northeast corner, first floor).

(9) Notify the Shift Superintendent (3-7172) when the power failure is over and the equipment is operating on normal power.

(10) Follow the recirculating-cooling-water startup procedure (in the plutonium-chemistry lab); exception: do not start up on weekends. (See Sect. III.A.2, p. 63.)

(11) Check the CAAM units.

(12) Check and start the proper Kinney pumps.

2. Emergency Transfer of Recirculating-Chilled-Water System (RCWS) to Process Water

The recirculating-chilled-water system is equipped with an emergency transfer system to automatically furnish process water for cooling the carbon-burning and muffle furnaces only (Fig. 19). This equipment is shut down on weekends. The emergency-water-system switch must be in the ON position and valve "A" (1/2-in. valve in the process-water-supply line) must be OPEN when the furnaces are energized.

(1) Loss of pressure in the RCWS, due either to power failure or to faulty pump operation, will energize a time-delay relay.

(2) If pressure has not been restored after a 20-sec time interval:

   (a) The alarm will sound at the annunciator panel.

   (b) The 1/2-in. solenoid valve will open to supply process water to the furnaces.

   (c) The 1-1/4-in. solenoid valve will open and drain the water in Tank F-106 to the hold tanks in the basement. A low-level alarm will sound as this tank empties.

   (d) The pump and compressor will be de-energized to prevent their resumption of operation when power is restored.

(3) Valve 41 at the outlet of storage tank F-106 must remain open while the emergency water system is in operation.

(4) There will be no cooling water to the evaporator or Kinney pump in the plutonium-chemistry lab.

(5) If transfer is due to pump failure rather than to a general power loss, the heating power and oxygen to the carbon burners and the heating power, oxygen, and water to the muffle furnaces will not be turned off unless the water-flow rate has dropped below the setting of the flow-indication switch at each furnace.

(6) If the power failure lasts for a considerable period (hours), the hold tanks in the basement will have to be manually drained to the sewer.

To restore the RCWS to normal operation:

(1) Turn the pump- and compressor-control switch to OFF.

(2) Turn the emergency-system switch to OFF.

(3) Fill the water tank about three-fourths full.

(4) Reset the RCWS by turning the chiller-control switch to PUMP and COMPRESSOR (located adjacent to compressor).

(5) When the pump pressure has been restored, turn the emergency-water-system switch to ON.

(6) Reset the annunciator panel to clear the fault indication.

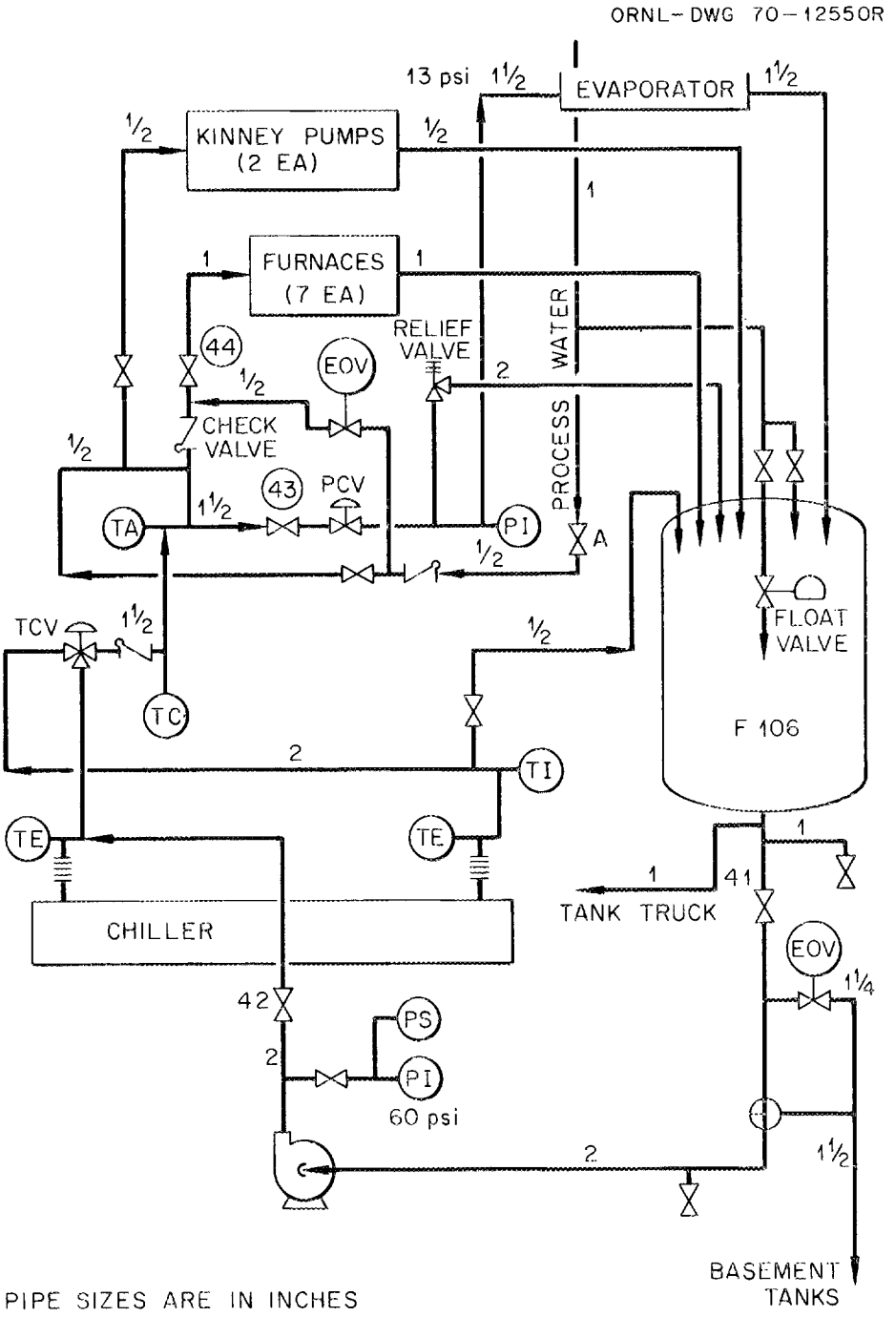

Recirculating Chilled Water System.

Fig. 19

(7) The system is now normal; reset all furnace controls being used.

Note: If any of the protective devices such as freeze-up, high- or low-head pressure, or motor overload are energized during the operation of the water chiller, the chiller must be restarted by turning chiller-control switch to OFF, then to PUMP and COMPRESSOR.

To shut down the RCWS system (normally the carbon burners and muffle furnaces should be cool):

(1) Turn the emergency-water-system switch to OFF.

(2) Turn the chiller-control switch to OFF.

3. Servicing Calutron Pumping System After Power Failure

(1) Open the power-breaker switches on all Kinney pumps: Pu housevac; U housevac; each of the eight 5-hp pumps for tanks 651-658 (see Fig. 20, which represents tanks 652, 653); and the 15-hp roughing pumps for tanks 655-658.

(2) Close all finishing (inlet) valves.

(3) Bring the pumps to atmospheric pressure.

(4) If power has returned before the pumps have been serviced, proceed with Steps (1) through (3); leave the pumps at atmospheric pressure.

Any special instructions will be left in the Operations Log Book on the cubicle desk.

B. MONTHLY CHECKS OF THE FACILITY SAFETY DEVICES

1. Plutonium Laboratory

a. Glove-Box-Exhaust Vacuum-Relief Valve

Damper AM-110 to the plutonium-glove-box exhaust fans AJ-121A and AJ-121B is pneumatically controlled by a vacuum controller located in front of carbon-furnace glove box R-111A. The vacuum controller is set to control the pressure in the duct header at minus 6 in. w.g. If there is a malfunction in the vacuum-controller system, causing a more negative pressure, a vacuum-relief valve located adjacent to the vacuum controller will relieve so as to maintain the duct header at minus 6 in. w.g.

To check the functioning of the vacuum-relief valve, reset the vacuum controller to control the pressure at minus 7 in. w.g. If it functions, the stem located between the diaphragm and the valve will move down and air can be heard flowing into the duct header. Set the vacuum controller back to minus 6 in. w.g. after the test.

ORNL-DWG 70-12554

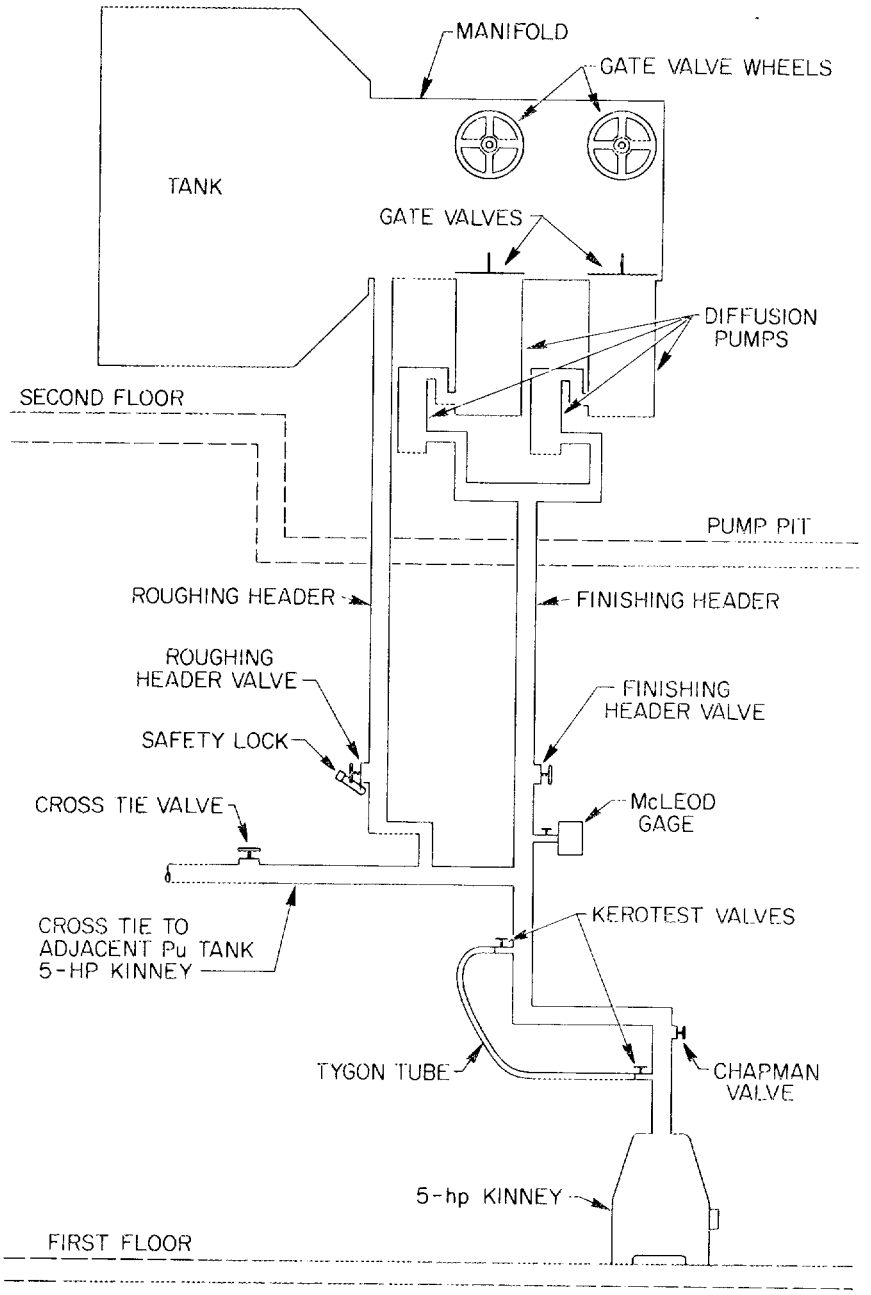

Calutron Vacuum System.

Fig. 20

b. Evaporator Steam-Supply and Instrument-Air-Supply Solenoid Valves

Should a release of steam pressure occur within the evaporator enclosure, a pressure-indicating instrument (Hays gage) with contacts is preset to instantly close the steam-supply and instrument-air-supply solenoid valves at minus 0.4 in. w.g. With the instrument-air supply off, the Conoflow level-control valve closes, stopping the flow of solution from the evaporator feed tank F-102A or F-102B to the evaporator. An alarm will occur on the annunciator panel. A special reset switch (in addition to the normal reset switch) on the annunciator panel has to be reset in order to reactivate the solenoid valves after the problem has been corrected.

To see if the solenoid valves are operative, partially vent the Hays gage to read minus 0.4 in. w.g. in order to trigger the alarm on the annunciator panel. When the steam-supply solenoid valve closes, the steam pressure will drop to zero, as indicated on the "output" gage within the "Kieley-Mueller" controller on the annunciator panel. When the air-supply solenoid valve closes, the air-supply pressure to the Conoflow valve will slowly drop to zero (first minute 94 to 81 lb, second minute 81 to 79 lb, third minute 79 to 78 lb, . . .). The instrument-air-supply pressure gage is located in front of the Conoflow valve. If the Conoflow valve has been regulated at the annunciator panel to be in the open position, it will close when the instrument-air-supply solenoid valve deactivates. The Conoflow valve stem moves up when the solenoid valve closes.

c. Oxygen-Supply Solenoid Valves for Carbon Furnaces

The Hays pressure-indicating gages for carbon-furnace glove boxes R-111A and R-111B are set to alarm the annunciator panel when the pressure within the glove boxes increases to approximately minus 0.4 in. w.g. Normally the pressure in each glove box is maintained at approximately minus 1 in. w.g. At the alarm point, the oxygen-supply solenoid valve will close and the furnace power will deactivate.

After a carbon furnace has been turned on, with oxygen being provided, the safety features can be checked by partially venting the Hays gage to set off the annunciator panel alarm. The oxygen and furnace-burning signal lights located on the control panel below the glove box should turn off and the oxygen flow on the Rotameter, which is normally valved to read 34%, should drop to zero. The Rotameter is located on the south-wall pipe rack.

d. Cooling-Water-Supply and Oxygen-Supply Solenoid Valves for the Product Muffle Furnaces

The muffle furnaces in glove boxes R-123, R-124, R-125, R-126, and R-129 are water-cooled and are provided with an oxygen supply. Controls for each furnace are located adjacent to the glove box to provide manual or

automatic furnace-control modes. Both modes of control are interlocked with contacts in the Fisher and Porter 0.0-to 1.0-gpm, flow-indicating switch, located in the furnace-cooling-water discharge line. Should the cooling-water-discharge flow become less than 0.3 gpm, the cooling-water-supply and oxygen-supply solenoid valves will close and the current to the furnace will be cut off.

The system is checked by slowly closing the manual valve located next to the Fisher and Porter flow-indicating switch in the furnace-cooling-water discharge line until the discharge flow has been reduced to less than 0.3 gpm. If the system is functional, the water-supply and oxygen-supply solenoid valves will close and the furnace power will turn off. The cooling-water-discharge, oxygen-supply, and furnace-burning signal lights on the glove-box control panel should turn off. The Fisher and Porter cooling-water-discharge flow indicator and Fisher and Porter oxygen-supply flow indicator should both read zero.

e. Emergency-Process-Water System of the Recirculating-Chilled-Water System (RCWS)

In case of faulty pump operation where there is a loss of pressure in the RCWS, process water is automatically furnished to provide cooling for the carbon-burning and product muffle furnaces (only) after a 20-sec time-delay relay is energized. See the "Emergency Transfer of Recirculating-Chilled-Water System (RCWS) to Process Water" (pp. 63 ff) discussion for a thorough description of the systems.

Since the process water flows through the same lines as the recirculating-chilled water to cool the carbon-burning and product muffle furnaces, the RCWS should be turned on to ensure that there are no obstructions in the lines and that this system is operational. The RCWS is then turned off and valve 42 (Fig. 19, p. 64) left open to simulate power-failure conditions. With the emergency-process-water transfer switch ON, the time-delay relay should energize in 20 sec, activating the emergency-process-water system and causing the annunciator panel to alarm. If the water level in RCWS tank F-106 starts to fall, the drain solenoid valve is operative. Process water can be seen and heard flowing into tank F-106 from the chilled-water return line if the process-water-supply solenoid valve opens and the check valve located in the line below valve 44 closes. The flow can also be checked by observing the Fisher and Porter furnace-water-flow-discharge indicators. Should the check valve fail to close, the process water would flow back through the RCWS pump into the F-106 drain line and none would reach the furnaces for cooling purposes. It is imperative that the F-106 drain solenoid valve, the emergency-process-water solenoid valve, and the check valve are maintained in workable conditions.

2. Plutonium-Glove-Box-Exhaust Vacuum Controller and Relief-Valve System

A Bristol-vacuum-controller and a Fisher governor-relief-valve (vacuum-breaker) system, installed in the plutonium-main-exhaust header, services

~20 enclosures in Building 9204-3. This device was added to the system to control the pressure in the enclosures, which could subject the glove boxes to implosion and the area to contamination. The vacuum controller is set to control the pressure in the duct header at minus 6 in. w.g. If there is a malfunction in the vacuum controller or a loss of instrument air to the exhaust-control system, the relief valve located adjacent to the vacuum controller will relieve to maintain the duct header at minus 6 in. w.g. Under such conditions, the valve design maintains the required duct pressure by venting the balance of fan capacity (22 in.).

Initial testing included both controller-setting changes and valving down at the glove boxes until the relief valve relieved to the atmosphere.

Present valve-operability testing includes monthly checks involving controller-level changes (minus 6 in. to minus 8 in. w.g.) and tests inferred during the main duct washdown (3- to 6-month intervals). The latter tests occur when a change is made from the main to the alternate exhaust header during washing and causes a reduction in air flow in many or all of the laboratory glove boxes, thereby opening the valve for inlet flow.

3. Absolute Filters

Absolute filters which exhaust highly (or potentially highly) contaminated areas are on the laboratories' routine testing schedule. This ensures the integrity of the installed filters. Filters are tested with dioctylphthalate (DOP) on a 6-month and/or when-installed basis.

C. BUILDING EMERGENCY AND CRITICALITY

1. Radiation Evacuation Procedure for Building 9204-3

a. General Information

(1) Purpose. The purpose of this procedure is to outline steps to be taken for protection of personnel in the event of a radiation monitor alarm. Everyone who works in or around this area or who has occasion to enter the area should be instructed as to the meaning of the alarm and the proper procedure to follow in case it sounds.

(2) Radiation-Monitor Alarm. Building 9204-3 is equipped with a radiation-detection and alarm system which actuates automatically on minimal levels of exposure to radiation. The system, upon actuation, will sound the ANSI plant standard evacuation alarm over the local-building public-address system. The signal should be recognized by all persons and requires the immediate evacuation of all building areas by all personnel to the designated assembly station (marked by an orange disk).

(3) Local-Emergency Directors. The Local-Emergency Directors (LED's) are the shift supervisors who have local-emergency squads under their jurisdiction. The LED's will have the responsibility of directing

the personnel at the assembly station. The LED's will report by the telephone provided at the assembly station to the Plant Emergency Director (Plant Shift Superintendent, PSS) during emergency conditions.

(4) Monitor System. The monitors are electronic instruments sensitized to actuate at 50 mR/hr beta-gamma. The system is provided with emergency power through a gasoline-engine-driven motor-generator set which automatically starts upon loss of normal power.

When the monitors are actuated, the building evacuation alarm is automatically sounded. This alarm is designed to provide an adequate audible alarm throughout the building area. Normal power for the alarm system is also backed up with emergency power.

(5) Threshold Detectors. Threshold detectors containing material sensitive to neutron flux are placed at selected points throughout the building. In the event of a criticality incident, these detectors can be processed to accurately determine the neutron flux at various points through the building. (See Appendix C for detector locations.)

(6) Assembly Stations. Assembly stations are locations outside the buildings, marked by numbered orange disks, at which personnel in radiation-monitored areas assemble in event of an evacuation in their area. The station for Building 9204-3 is No. 8, located southeast of the building (see Appendix E).

(7) Personnel-Monitoring Depots. These depots are buildings (9712 and 9723-19) to which personnel at an assembly station can be directed after a radiation incident has occurred. Equipment is provided there for personnel monitoring, showering, and changing of clothing.

b. Responsibilities

(1) Local-Emergency Director. Each LED will

(a) Report to his assigned assembly station (see Appendix F).

(b) Maintain a trained shift-emergency squad proficient in the use of the survey and communication instruments.

(c) In the event of a radiation incident: survey his assembly station with radiation-detection instruments; contact the PSS Office by radio (KIN-286) and inform it of existing radiation conditions at the assembly station; and then inform his people at the assembly station of any instructions from the PSS Office. (Emergency-squad personnel will act in absence of LED.)

(2) Plant-Emergency Director [Shift Superintendent (PSS) on Duty]. The PSS will

(a) Monitor the radiation-emergency telephone at all times.

(b) Announce over the plant public-address system and emergency-telephone system the occurrence of a monitor alarm.

(c) Direct all surveys of areas following a monitor alarm.

(d) Direct the "All Clear" following a monitor alarm.

(e) Invoke the plant-emergency procedures as outlined in the Y-12 Plant Emergency Manual in the event a radiation accident has occurred.

(f) Instruct personnel to initiate a Monitor Alarm Report (UCN-2408).

(3) Area Maintenance Personnel. The appropriate area maintenance supervision will

(a) Maintain the monitor system in good operating condition.

(b) Perform repairs on monitor equipment as requested by the operating departments.

(c) Maintain the auxiliary electrical power equipment.

(4) Electromagnetic Isotope Separations Department. EMSD supervision will

(a) Maintain a current radiation evacuation procedure.

(b) Maintain current building-evacuation charts and display them prominently throughout Building 9204-3.

(c) Conduct the periodic checks on the monitor alarm system. (See Appendix D.)

(5) Plant Protection. Plant-protection personnel will

(a) Freeze all traffic through the plant perimeter gates upon a radiation monitor alarm, pending clearance or information from the PSS Office.

(b) Maintain traffic control as directed by the PSS Office.

(6) Health Physics Department (ORNL). HP personnel will maintain in good operating condition the portable radiation-detection instruments and threshold detectors at their prescribed locations within the building. (See Appendixes B and C.)

(7) Employees. Plant personnel will

(a) Be familiar with the emergency procedures and the posted building-evacuation routes. (Crash doors may be used for evacuation purposes.)

(b) Wear badges at all times. (This is important since the badge contains materials which aid in the determination of the radiation exposure to the employee.)

(c) Promptly evacuate all alarmed areas and assemble at the designated assembly station; remain there pending directions from the LED.

(d) Notify the LED if clothing has been splattered with material from a serious radiation incident. The LED will arrange for transportation of these individuals to Building 9723-19 where contaminated clothing can be removed and the individuals can be showered. Time is important in this case.

(e) Reenter an area following a monitor alarm only at the explicit direction of the PSS Office.

c. Radiation-Alarm Emergency Procedure

(1) When the evacuation sounds, indicating that one or more monitor stations are in alarm condition, immediately evacuate all areas covered by the audible-alarm system. (Radiation-evacuation alarms are registered by Tel-Alarm on the console in the PSS Office.)

(2) All personnel must go quickly to the nearest assembly station (Station 8, southeast of Building 9204-3) by the most direct route from the building. If an employee suspects that his clothing has become contaminated with splattered material, he must report this fact promptly to the LED at the assembly station. The LED should immediately see that the contaminated individuals are transported to Building 9723-19 for removal of clothing and for showering. (See Appendix E.)

(3) The LED and squad personnel will report to the assembly station and immediately begin a Radector survey of the assembly station for radiation conditions. (See Appendix E.)

(4) The PSS will telephone information relating to the monitor alarm to all stations and announce by the plant public-address system.

(5) If no evidence of radiation as caused by a radiation incident is evident at the assembly station, the LED will direct the people to await further instructions. The LED will inform the PSS Office by telephone of existing radiation conditions at the assembly stations and will maintain telephone contact with the PSS Office. The PSS will give instructions as to how to proceed.

(6) In the event of a serious incident, the PSS Office will direct a survey to determine the site of the accident. When the site is determined, the personnel at the assembly stations will be instructed accordingly.

(7) All personnel will report to their normal work stations and duties upon receiving the "All Clear" announcement. The Plant Protection Department will secure all normally locked exits following an evacuation.

(8) The LED will initiate the Y-12 Monitor Alarm Report (UCN-2408) in all cases of activated monitors other than tests. (See Appendix H.)

Locations of Personnel Monitoring depots:

East — Building 9712 (Garage, north of East Portal)
West — Building 9723-19 (Change house, east of Bear Creek Portal)

The PSS Office will make proper notification to plant administrative personnel in the event of a critical accident.

2. Building Emergencies

(1) The ANSI evacuation signal in the building is reserved for the radiation-monitor alarms; evacuation of the building is necessary. The procedure to be followed is as given in Sect. III.C.3(1) (below).

(2) The fire-alarm signal on the plant horn system for Building 9204-3 is 4-1-4. The ambulance and fire-truck station is at the center entrance on the north side of the building.

(3) Other emergencies within the building are described over the building public-address system. The signal for the emergency squad to assemble is given by sounding 2 blasts over the air horn. The button to sound the horn is located on the second floor, south-center area (behind the wall of the electrical office).

3. Criticality

In the event of a criticality incident, an alarm is initiated by gamma-radiation monitors to produce a signal audible from various localities; other evidences: (a) blue glow or haze; (b) fuming or steaming of vessel containing fissionable material; and (c) unusually high gamma readings over a wide area. Personnel will

(1) Evacuate the buildings and go to the assembly stations (for our area, No. 8) and await further instructions. The Local Emergency Director or his deputy will measure the radiation level at Station 8 and contact the PSS by telephone for instructions.

(2) Reenter the area only with specific permission of the PSS.

IV. APPENDIXES

APPENDIX A

Monitor Locations, Building 9204-3

Number of Monitors	Location
2	Station "A" — Second floor, Column M $\frac{1}{2}$-39
2	Station "B" — First floor, Column M-30

APPENDIX B

Radector Locations, Building 9204-3

Number of Instruments	Location
1	Gamma Survey Meter in Shift Supervisor's office, Room No. 222, southwest corner of second floor
5	Gamma Survey Instruments in Health Physics office, Room No. 211, second floor (north center)

APPENDIX C

Secondary Threshold Detector Locations, Building 9204-3

Number	Floor	Location
52	Basement	L $\frac{1}{2}$ — 28 $\frac{1}{2}$
53	Basement	L $\frac{1}{2}$ — 37
46	First	N $\frac{1}{2}$ — 40
47	First	M $\frac{1}{2}$ — 38
48	First	M — 41
49	First	M — 32
50	First	N $\frac{1}{2}$ — 34
51	First	N $\frac{1}{2}$ — 26 $\frac{1}{2}$
54	Second	N — 32

APPENDIX D

Periodic Monitor Check, Building 9204-3

Radiation-Monitor System Test Procedure

A. Daily Monitor Check

In order to ensure that the monitors are in good working order at all times, they should be checked once daily on regularly scheduled work days. The test will be made by visual inspection. The alarm will not be actuated. Each monitor has a built-in radiation source and is constantly measuring radiation background as indicated by the meter on the face of the monitor. The supervisor of the Special Separations Department will be responsible for making the daily visual check. The meter should normally read between 0.2 and 1.5 mR. If the reading is in this range, then the letter "G" should be entered on the Y-12 Plant Radiation Monitor Check sheet, Form UCN-903. If the reading is out of this range, call instrument maintenance, who will make corrective adjustments or replace the monitor with one from the "ready" bench at Building 9737. In either case, an "F" should be entered on Form UCN-903, with pertinent details entered in the remarks.

B. Weekly Monitor and Electronic Siren Test (Red Test)

It is necessary to actuate the complete system once a week to ensure performance in case of emergency. The shift supervisor will be responsible for testing the monitors and the siren system each week. Data for the daily monitor check may be taken concurrently. The PSS Office will be notified prior to, and at the termination of, the red test to alert them of the test and to determine if the PSS Tel-Alarm panel responded correctly to the red test.

The weekly test should be made according to the following procedure.

1. Notify building personnel on the public address system, and PSS by telephone, that a low-level monitor test alarm is about to be made.

2. Remove the rod and capsule from the lead storage cylinder, mezzanine area, northeast corner of first floor, Column L-34. Handle the rod carefully and do not grasp the source end of the rod.

3. Go to the control panel on second floor between columns M-37 and M-39 and move the selector switch to "Station-A Test." This prevents the monitor system from giving a full alarm on the public-address system while Station A is being tested.

4. At Station A, slowly move the test capsule to each monitor until the pointer moves into the red zone. Each monitor light and the buzzer should respond. The "beep-beep" should sound at a low level when the two monitors are activated. The meter on each monitor should have indicated a 50-mR/hr reading as each monitor was actuated.

5. Record the meter response on the Y-12 Plant Radiation Monitor Check (UCN-903) as an "F" (Fail) or "G" (Good) according to the test results.

6. Check the annunciator panel located across the road from Station No. 8 to determine that the proper lights are operating.

7. Reset the Station-A monitors with the local reset buttons at Station A.

8. Reset the "beep-beep" with the reset button at the control test panel at Station A. DO NOT MOVE SELECTOR SWITCH WHILE A MONITOR STATION TEST IS IN PROGRESS. This would cause a false building evacuation.

9. After the "beep-beep" circuit is reset (from Station-A test), move the selector switch to Station-B test.

10. Check Station B in the same manner as described for Station A.

11. Check the annunciator panel near assembly Station No. 8 to determine that the proper lights are operating.

12. Reset the Station-B monitors with the local reset buttons at Station B.

13. Reset the system with the reset button located at the annunciator panel near Station No. 8.

Note: The alarm circuits should be reset at the annunciator panel rather than at the control panel so that both siren test buttons will have been tested.

14. Return the selector switch to NORMAL on the control test panelboard.

15. The test is completed.

16. Notify the PSS and building personnel [via public-address system (PAX) announcement] that the monitor test has been completed.

The supervisor of the Special Separations Department will complete the Y-12 Plant Radiation Monitor Check (UCN-903) with the requested data and distribute the copies as indicated on the form. He will also complete the Monitor Alarm Report (UCN-2408) and forward the copies describing any actuation or failure of a monitor in the radiation alarm system.

APPENDIX E

Personnel Assembly Station, Building 9204-3

Assembly Station No. 8, southeast of Building 9204-3.

All assembly stations contain a telephone to the PSS Office, two gamma survey meters (Radectors), and instructions for using same.

APPENDIX F

Assignment of LED's to Assembly Station, Building 9204-3

Work Location	Assembly Station
All operating areas	No. 8

APPENDIX G

Paging Microphones, Building 9204-3

Location	Telephone
North mezzanine, second floor	3-5841
South mezzanine, second floor (used during day shift, Monday through Friday)	3-5451
OR	
Cubicle room, southeast corner, second floor (used during B and C shift, 7 days a week)	3-5669
PAX Paging Number	43

APPENDIX H

Y-12 Monitor Alarm Report

MONITOR ALARM REPORT

THIS FORM IS TO BE COMPLETED UPON THE ACTIVATION OR FAILURE OF ANY MONITOR OR MONITOR ALARM SYSTEM

LOCATION AND TIME

BUILDING NUMBER	DATE OF ALARM
MONITOR(S) NUMBER	TIME OF ALARM

AREA SURVEY

SURVEY METER READING	SURVEYED BY

INDICATED CAUSE OF ALARM

RE-ENTRY (When Applicable)

TIME	BY

INSTRUMENT MAINTENANCE DEPARTMENT

REASON FOR FAILURE

CORRECTIVE ACTION

ELECTRICAL FOREMAN	REPORT PREPARED BY

UCN-2408
(2 11-60)

DISTRIBUTION: White - Plant Shift Supt. Green - Elect. Dept. Supt. Pink - Radiation Safety Dept. Canary - Dept. Supt.

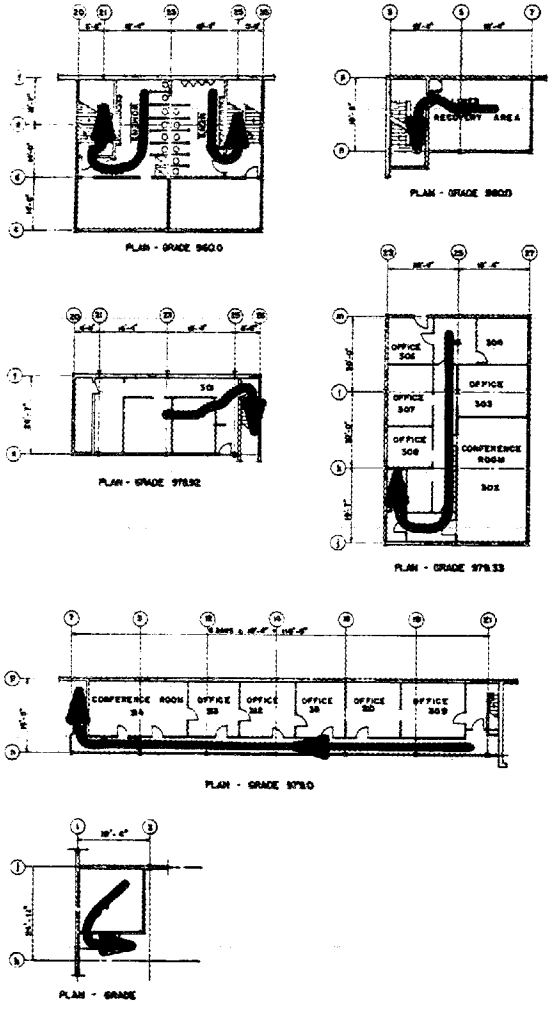

EVACUATION MAP

APPROVED

T-12 PLANT OAK RIDGE, TENN.

MASTER BUILDING PLAN
MEZZANINE FLOOR

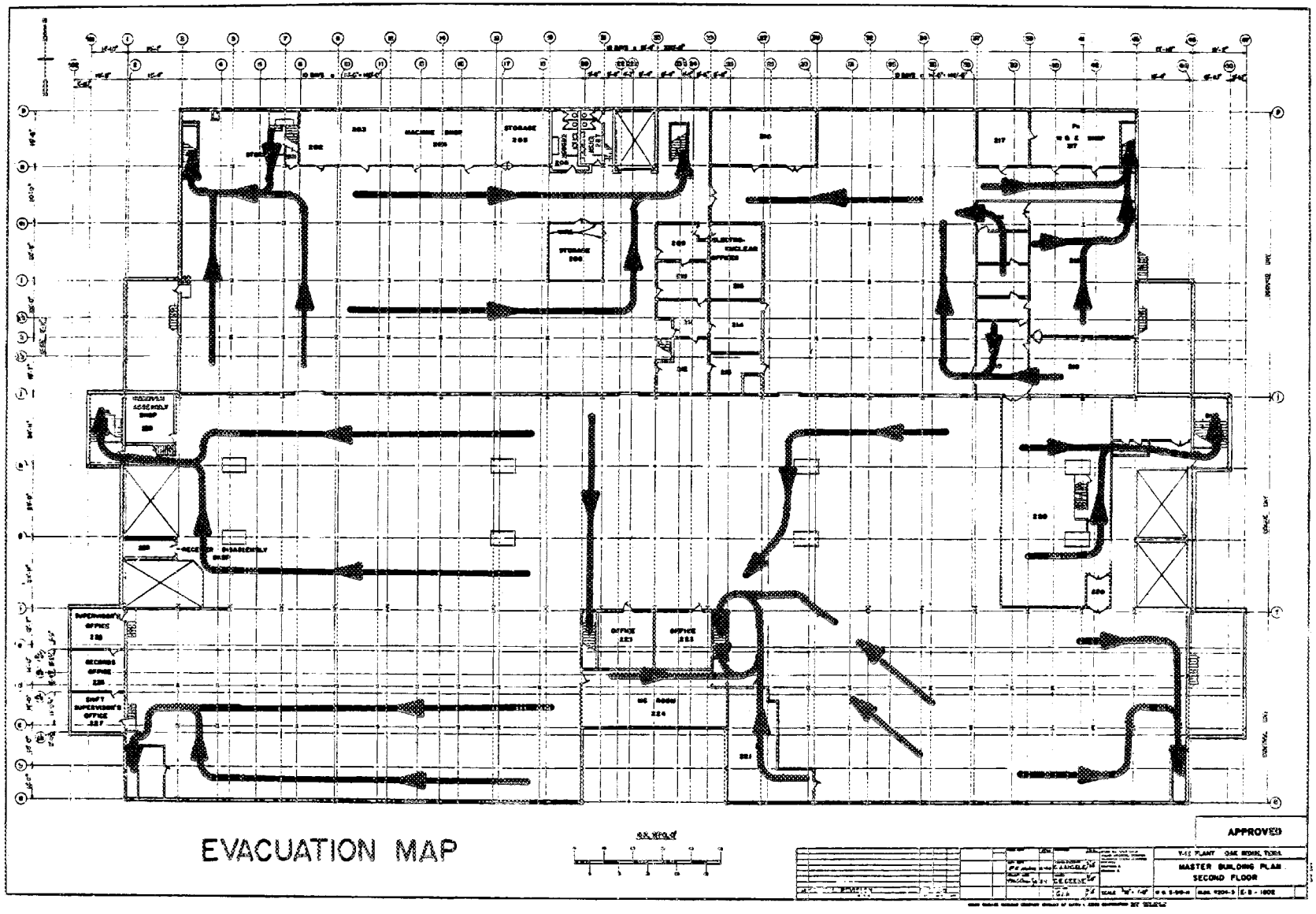
EVACUATION MAP
APPROVED
MASTER BUILDING PLAN
SECOND FLOOR

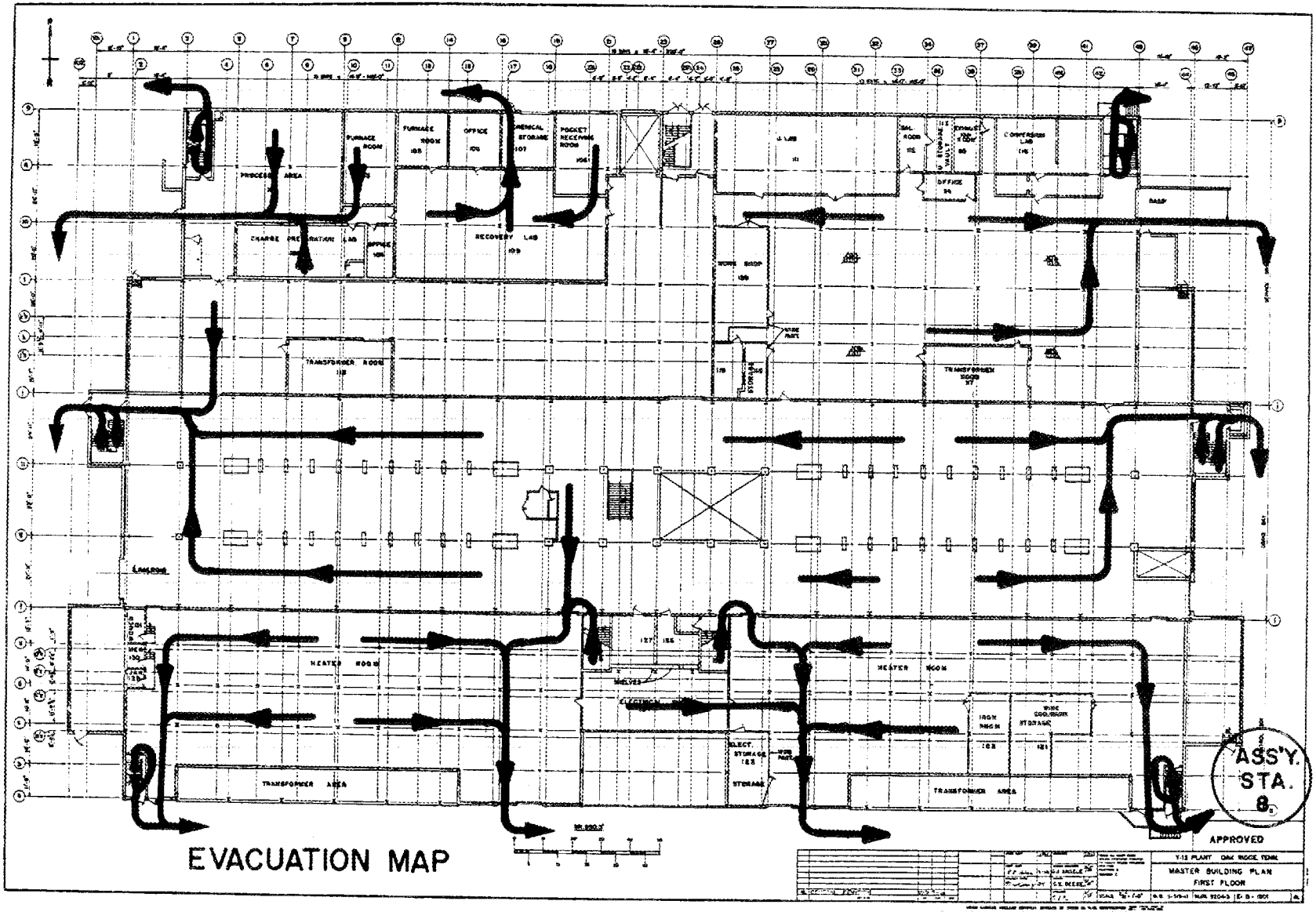
EVACUATION MAP
PROCESS AREA
FURNACE ROOM
OFFICE
CHEMICAL STORAGE
POCKET RECEIVING ROOM
RECOVERY LAB
WORK SHOP
TRANSFORMER ROOM
HEATER ROOM
TRANSFORMER AREA
ELECT. STORAGE
STORAGE
IRON ROOM
WIRE COOLING STORAGE
ASS'Y. STA. 8
APPROVED
Y-12 PLANT OAK RIDGE TENN.
MASTER BUILDING PLAN
FIRST FLOOR

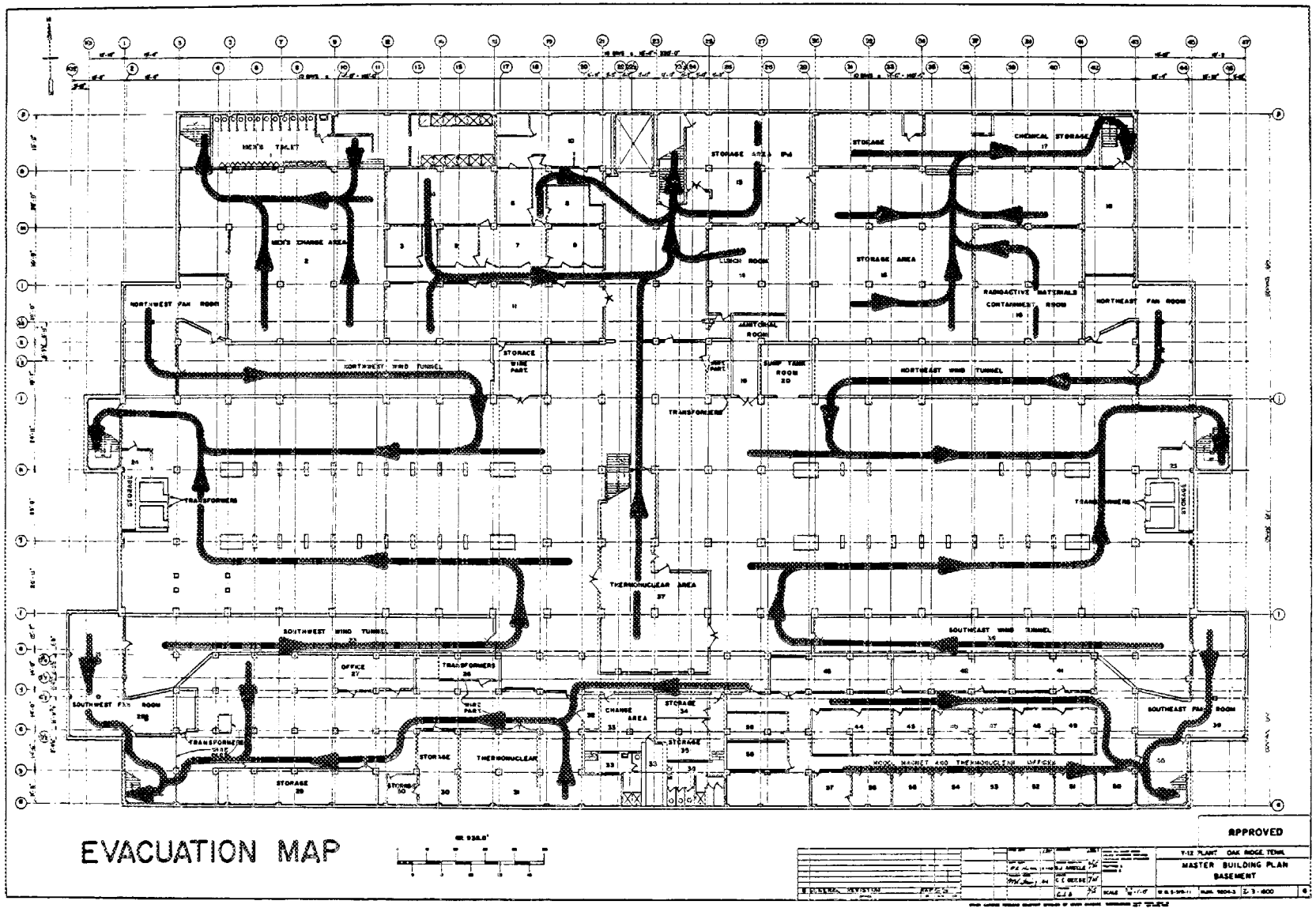
EVACUATION MAP
MEN'S TOILET
MEN'S CHANGE AREA
STORAGE AREA
CHEMICAL STORAGE
LUNCH ROOM
RADIOACTIVE MATERIALS CONTAINMENT ROOM
NORTHWEST FAN ROOM
NORTHEAST FAN ROOM
JANITORIAL ROOM
NORTHWEST WIND TUNNEL
NORTHEAST WIND TUNNEL
STORAGE
SUMP TANK ROOM
TRANSFORMERS
THERMONUCLEAR AREA
SOUTHWEST WIND TUNNEL
SOUTHEAST WIND TUNNEL
OFFICE
SOUTHWEST FAN ROOM
SOUTHEAST FAN ROOM
CHANGE AREA
THERMONUCLEAR
APPROVED
Y-12 PLANT OAK RIDGE, TENN.
MASTER BUILDING PLAN
BASEMENT

APPENDIX J
Y-12 Plant Radiation Monitor Check

Y-12 PLANT RADIATION MONITOR CHECK

DATE (WEEK ENDING)

BLDG.	MONITOR NO.	DAILY VISUAL CHECK MON.	TUE.	WED.	THU.	FRI.	SAT.	SUN.	HIGH VOLTAGE SIREN TEST	MOTOR GEN. POWER TEST	REMARKS ON SUB-STANDARD TEST RESULTS AND CORRECTIVE ACTION INITIATED
9215	1-A										
M WING	1-B										
9998	2-A										
G-3	2-B										
9212	3-A										
O-1 WING	3-B										
9212	4-A										
C WING	4-B										
9995	5-A										
	5-B										
DOCK 6											
9201-4	A-1										
	A-2										
	B-1										
	B-2										
9201-5	A-1										
	A-2										
	B-1										
	B-2										
9202	A-1										
	A-2										
	B-1										
	B-2										
9203	A-1										
	A-2										
	B-1										
	B-2										
9206	A-1										
	A-2										
	B-1										
	B-2										
9204-2	A-1										
	A-2										
	B-1										
	B-2										
9204-3	A-1										
	A-2										
	B-1										
	B-2										
9204-4	A-1										
	A-2										
	B-1										
	B-2										
9720-5	A-1										
	A-2										
	B-1										
	B-2										
9720-10	A-1										
	A-2										
	B-1										
	B-2										
9401-2	A-1										
	A-2										
	B-1										
	B-2										
81-22	A-1										
	A-2										
9720-18	B-1										
	B-2										

UCN-905
(2 11-69)

DISTRIBUTION: WHITE - PSS OFFICE, BLDG. 9706-2, Y-12 RC
GREEN - DEPARTMENT SUPERINTENDENT
CANARY - FOREMAN'S FILE

FOREMAN'S SIGNATURE