LOCKHEED MARTIN ENERGY RESEARCH LIBRARIES

3 4456 0515462 2

CENTRAL RESEARCH LIBRARY ORNL-4883

cy.2

Chemical Technology DIVISION

Annual Progress Report

PERIOD ENDING MARCH 31, 1973

OAK RIDGE NATIONAL LABORATORY
CENTRAL RESEARCH LIBRARY
DOCUMENT COLLECTION
LIBRARY LOAN COPY
DO NOT TRANSFER TO ANOTHER PERSON
If you wish someone else to see this document, send in name with document and the library will arrange a loan.
UCN-7969
(3 3-67)

OAK RIDGE NATIONAL LABORATORY
OPERATED BY UNION CARBIDE CORPORATION • FOR THE U.S. ATOMIC ENERGY COMMISSION

Printed in the United States of America. Available from
National Technical Information Service
U.S. Department of Commerce
5285 Port Royal Road, Springfield, Virginia 22151
Price: Printed Copy $5.45; Microfiche $0.95

This report was prepared as an account of work sponsored by the United States Government. Neither the United States nor the United States Atomic Energy Commission, nor any of their employees, nor any of their contractors, subcontractors, or their employees, makes any warranty, express or implied, or assumes any legal liability or responsibility for the accuracy, completeness or usefulness of any information, apparatus, product or process disclosed, or represents that its use would not infringe privately owned rights.

ORNL-4883
UC-10 – Chemical Separations Processes
for Plutonium and Uranium

Contract No. W-7405-eng-26

CHEMICAL TECHNOLOGY DIVISION
ANNUAL PROGRESS REPORT
for Period Ending March 31, 1973

D. E. Ferguson – Division Director
K. B. Brown – Assistant Division Director
R. G. Wymer – Chemical Development Section A Chief
R. E. Blanco – Chemical Development Section B Chief
M. E. Whatley – Unit Operations Section Chief
H. E. Goeller – Process Design Section Chief
R. E. Brooksbank – Pilot Plant Section Chief

AUGUST 1973

OAK RIDGE NATIONAL LABORATORY
Oak Ridge, Tennessee 37830
operated by
UNION CARBIDE CORPORATION
for the
U.S. ATOMIC ENERGY COMMISSION

LOCKHEED MARTIN ENERGY RESEARCH LIBRARIES
3 4456 0515462 2

Preface

This progress report is a summary of the research and development efforts conducted in the Chemical Technology Division during the period April 1, 1972–March 31, 1973. Further information regarding work in the various programs can be obtained from the topical reports and journal articles cited in the references.

Contents

PREFACE iii

1. DEVELOPMENT OF AQUEOUS PROCESSES FOR LMFBR FUELS 1

2. DEVELOPMENT OF METHODS FOR REPROCESSING HTGR FUELS 2
   - 2.1 Hot-Cell Studies 2
   - 2.2 Burner Off-Gas Decontamination Studies 6
   - 2.3 Whole-Block Burner Studies 8
   - 2.4 Laboratory Studies 11

3. MOLTEN-SALT REACTOR PROCESSING 14
   - 3.1 Molten-Salt Reactor Flowsheet Analysis 14
   - 3.2 Equilibria in Fused-Salt–Liquid Alloy Systems 16
   - 3.3 Solubility of Thorium in Liquid Li-Pb Alloys 16
   - 3.4 Protactinium Oxide Precipitation Studies 17
   - 3.5 Chemistry of Fuel Reconstitution 18
   - 3.6 Reductive Extraction Chemistry 19
   - 3.7 Reductive Extraction Engineering Studies 19
   - 3.8 Development Studies for the Reductive Extraction Process Facility 21
   - 3.9 Studies for Determining the Concentration of Bismuth in Fluoride Salt from Engineering Experiments 23
   - 3.10 Development of the Metal Transfer Process for Removing Rare Earths 23
   - 3.11 Contactor Studies of a Simulated Molten-Salt–Liquid Bismuth System 25
   - 3.12 Axial Dispersion and Gas Holdup in Open Bubble Columns 27
   - 3.13 Development of a Frozen-Wall Continuous Fluorinator 28
   - 3.14 Design of a Processing Materials Test Stand and the First Molybdenum Reductive Extraction Equipment 29
   - 3.15 Development of a Corrosion-Resistant Salt-Bismuth Interface Detector 30

4. WASTE TREATMENT AND DISPOSAL 32
   - 4.1 Radioactive Waste Repository 32
   - 4.2 Engineering, Economic, and Safety Considerations 35
   - 4.3 Combustion of Plutonium-Bearing Solid Wastes 35

5. TRANSURANIUM-ELEMENT PROCESSING 38
5.1 TRU Operations 38
5.2 Isolation and Purification of TRU Products 40
5.3 Special Projects 40
5.4 Development of Chemical Processes 41
5.5 Transplutonium-Element Research 42

6. DEVELOPMENT OF THE THORIUM FUEL CYCLE 45
6.1 Sol-Gel Process Development for the Preparation of Microspheres 45
6.2 Process Development for the Preparation of Microspheres by Using Ion Exchange Resins 48
6.3 Preparation of Test Materials 50
6.4 Sol-Gel Process Flowsheet Evaluation 51
6.5 ^{233}U Storage, Purification, and Distribution 52

7. PREPARATION OF $^{233}UO_2$ 53
7.1 Dissolution of Sintered ThO_2 Pellets 53
7.2 ^{233}U Purification Systems 53
7.3 Conversion of ^{233}U from Nitrate Solution to Ceramic-Grade Dioxide Powder 54

8. SEPARATIONS CHEMISTRY RESEARCH AND DEVELOPMENT 55
8.1 New Separations Agents 55
8.2 Plutonium Purification with Amines 56
8.3 Recovery of Uranium from Wet-Process Phosphoric Acid 56
8.4 Separation of Radium from Uranium Ore Tailings 57
8.5 Separation of Alpha Emitters from Fuel Reprocessing Wastes 58
8.6 High-Resolution Rare-Earth Separations 58
8.7 Isotope Enrichment by (n,γ) Reactions in Molecular Sieves 59
8.8 Distribution Equilibria, Kinetics, and Mechanisms 59
8.9 Aggregation and Activity Coefficients in Solvent Phases 62

9. CHEMICAL APPLICATIONS OF NUCLEAR EXPLOSIVES 63
9.1 Disposal of Tritiated Water 63
9.2 Recovery of Oil from Oil Shale 63

10. BIOCHEMICAL TECHNOLOGY 65
MACROMOLECULAR SEPARATIONS 65
10.1 Separation of Oligonucleotides 65
10.2 Sequence of Three Formylmethionine Transfer RNAs 66
10.3 Isolation of Colony Stimulating Factor 68
10.4 Purification of Erythropoietin 69

HIGH-RESOLUTION ANALYTICAL SYSTEMS 70
10.5 Engineering Development 70
10.6 Applications and Experimental Results 76
WATER POLLUTION STUDIES 79
10.7 Analytical Systems 80
10.8 Analytical Results 81
FAST ANALYZER DEVELOPMENT 82
10.9 Engineering Development 82
10.10 Application of the Miniature Fast Analyzer 84

11. SPECTROPHOTOMETRIC STUDIES OF SOLUTIONS OF LANTHANIDES AND ACTINIDES 85
11.1 Spectral Studies of the Actinides 85
11.2 Spectrophotometric Studies of I_2 in Condensed Gases 86
11.3 Protonic Wave Functions and Spectra 86

12. PREPARATION AND PROPERTIES OF ACTINIDE OXIDES 87
12.1 Oxidation of Colloidal Urania 87
12.2 Theoretical Model of Colloidal Interaction 88

13. CHEMICAL ENGINEERING RESEARCH 90
13.1 Thorium Ion Exchange with Very Small Resins 90
13.2 Chemical Engineering Research Studies Related to MSR Processing 92

14. TRITIUM SEPARATION TECHNOLOGY 93

15. MISCELLANEOUS PROGRAMS 95
15.1 Quality Assurance Program 95
15.2 Resource Studies 96
15.3 Environmental Impact of LWR Nuclear Power Plants and the Nuclear Fuel Cycle 96
15.4 Control of Emissions from Fossil-Fueled Power Plants 99

PUBLICATIONS, SPEECHES, AND SEMINARS 100

1. Development of Aqueous Processes for LMFBR Fuels

This year the development work on LMFBR reprocessing is reported in periodic progress reports, rather than annually.

2. Development of Methods for Reprocessing HTGR Fuels

The reprocessing of HTGR fuels requires the burning of graphite blocks containing coated fuel particles in the form of fuel sticks. Our studies have primarily consisted of hot-cell tests with irradiated HTGR fuel specimens, development of burner technology using unirradiated fuel, and development of methods for decontaminating the burner off-gas. We have also provided assistance relative to the planning of HTGR fuel reprocessing at the Idaho Chemical Processing Plant in the areas of overall equipment flowsheets, layouts, and cost information.

2.1 HOT-CELL STUDIES

Hot-cell studies with irradiated HTGR fuel specimens are being made to determine the quantities, nature, and behavior of the radionuclides that find their way into the various off-gas streams in the reprocessing flowsheet and, in particular, into the off-gas from the burner used to burn the graphite away from the fuel kernels. This information is needed to develop a process for decontaminating the HTGR fuel burner off-gas. We are also concerned with determining fuel particle breakage during reprocessing, crossover of fertile material into the fissile product stream, crossover of fissile material into the fertile product stream, and in ascertaining whether the results obtained in "cold" engineering tests are valid for irradiated fuels.

Laboratory Support Studies

A miniature HTGR fuel burner and associated off-gas equipment, which duplicates the equipment installed in the hot cell, has been assembled in a laboratory hood. This equipment is being used to evaluate flow and thermal properties of the burner, and to test various particulate removal and sampling devices before they are installed in the hot cell.

The body of the miniburner is a 6-in.-long tapered tube, 0.625 in. ID at the bottom and 1.275 in. ID at the top. Several experiments (Table 2.1) were run in the miniburner to determine the fluidization characteristics of particles representative of those in the hot-cell experiments. Particles of sand were used to approximate TRISO-coated particles since they are similar in size and density; the Al_2O_3 was the same size and type as that normally used in a hot-cell run; the carbon was pulverized H-327 graphite fuel block material. For sand and alumina, the tabulated argon velocities just barely caused fluidization; in the case of carbon, the tabulated velocity fluidized the largest particles and was sufficient to carry the smaller particles to the top of the tapered burner. Since most of the hot-cell tests will be made at gas flow rates of 50 cm^3/min (STP), only very finely divided carbon particles will be entrained in the gas stream and will subsequently be collected on the roughing filter.

Table 2.1. Incipient fluidization velocities in the miniburner

Material	Mesh size	Burner temperature (°C)	Argon flow rate (std cm^3/min)	Superficial gas velocity[a] (fps)
Sand	−35 +40	25	975	0.27
Sand	−35 +40	600	400	0.35
Al_2O_3	−80 +100	25	700	0.19
Al_2O_3	−80 +100	600	360	0.32
Carbon	−325	625	225	0.16

[a]Calculated superficial gas velocities at the bottom of the burner, at the indicated burner temperature.

Other experiments were carried out to determine the relationship between internal temperature, outer burner shell temperatures, and oxygen flow rates. The results of these experiments indicated that, at oxygen flow rates much above 200 cm^3/min, it will be necessary to dilute the oxygen with CO_2 or argon to limit the burning rate (and hence the internal temperatures).

Four types of particulate samplers are being tested in conjunction with the miniburner to provide data on particulates that are formed during combustion of unirradiated fuel sticks. These are: (1) an electrostatic sampler (Thermosystems Model 3100); (2) a thermal sampler (Aminco Model 5-3900); (3) silver membrane filters (Selas Corporation); and (4) a multistage impactor (Enviro-Chem. Division of Monsanto). It is expected that some of the samplers will prove useful in hot-cell work with irradiated samples.

The silver membrane filters are already being used in hot-cell work. They have two major advantages over conventional fiber filters: (1) they can be used at higher temperatures and (2) they are electrically conductive and therefore can be used directly for electron microscopy. Also, they will not adsorb any significant amount of moisture; however, they would be expected to react with iodine. In the current hot-cell work, they are being used both at 500°C and at room temperature. We are using the finest porosity available, 0.2 μm; the room-temperature filter is backed up with a Gelman Type A fiber filter.

Experiments with RTE-7

Several recycle test elements (RTEs) are being irradiated in the Peach Bottom reactor for use in ORNL's fuel reprocessing development program. Most of the types of fuel particle combinations proposed for HTGR fuel are included in these elements.[1,2]

The first of the elements removed from the Peach Bottom reactor, RTE-7, became available for hot-cell studies early in 1972. It had been irradiated for 252 effective full-power days to an estimated average burnup of 2.38% FIMA; a peak fast-neutron fluence of $\sim 1 \times 10^{21}$ neutrons/cm^2 had been accumulated.[3] The fuel had cooled 210 days when we started the hot-cell experiments.

Of the several types of fuel particle combinations in RTE-7, we chose to study type *i*, which consisted of large TRISO-coated ThC_2 particles and smaller TRISO-coated UC_2 particles contained in a 0.5-in.-diam by 2-in.-long graphite fuel rod. Type *i* is similar to the TRISO-coated ThC_2–TRISO-coated $(4Th,U)C_2$ combination used as fuel in the Fort St. Vrain reactor. The latter is the fuel that will be available for use in the hot reprocessing demonstration.

The experimental procedure was described in last year's annual report, which also included gross material balances and the ^{85}Kr and ^{3}H activities in the off-gases. As noted at that time, the observed distribution of ^{85}Kr and ^{3}H appeared unusual, and the recovered values were also low, especially for ^{3}H. Therefore, the experiment was repeated, using a redesigned and much-improved collection system for the off-gases. The particulate filtering system was also redesigned and modified to include both hot (500°C) and cold (30°C) silver membrane filters, with a condenser section in between them, followed by an absolute filter. The new, improved flowsheets are shown in Figs. 2.1 and 2.2.

At this time, the results available include the U-Th and solid fission product analyses from the first experiment, and the ^{85}Kr and ^{3}H results from the second experiment.

The uranium-thorium distribution in experiment RTE-7 is shown in Table 2.2. Based on the total amounts recovered, 0.24% of the uranium and 0.02% of the thorium remained in the insoluble residues after leaching. We calculated burnup by assuming that the ^{137}Cs associated with the +80-mesh fissile and −80-mesh fines fractions was the result of ^{235}U fission, and that the ^{137}Cs in the +42-mesh fertile fraction was the result of ^{233}U fission. Using the appropriate ^{137}Cs yields, we calculated that approximately 2.3% of the thorium had been converted to ^{233}U and that approximately 11.9% of the original ^{235}U had fissioned. Crossover of the fertile fraction to the fissile fraction was approximately 3.3%; crossover of the fissile fraction to the fertile fraction was 2.1% or 5.2%, depending on whether ^{235}U or ^{238}U was used as the basis of the calculations.

The fission product distribution in the leached burner products is shown in Table 2.3. As expected, the bulk of the fission product activity is associated with the fissile fraction.

The off-gas train was also analyzed for solid fission products, practically all of which were found on the sintered nickel filters located immediately downstream from the burner. Greater than 99% of the total ^{95}Zr, ^{95}Nb, ^{106}Ru, and ^{144}Ce found were associated with

---

1. *Chem. Technol. Div. Annu. Progr. Rep. Mar. 31, 1971*, ORNL-4682, pp. 92–94.
2. R. P. Morissette and K. P. Steward, *Recycle Test Element Program Design, Fabrication and Assembly*, GA-10109 (September 1971).
3. *GCR-TU Programs Annu. Progr. Rep. Sept. 30, 1971*, ORNL-4760, pp. 65–66.

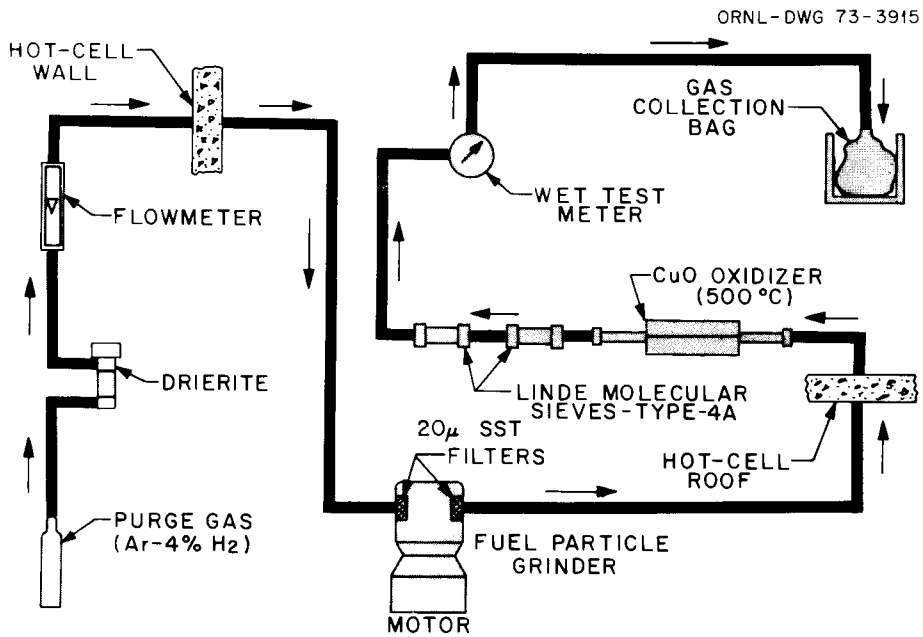

Fig. 2.1. Flowsheet for RTE-7 fuel particle grinding.

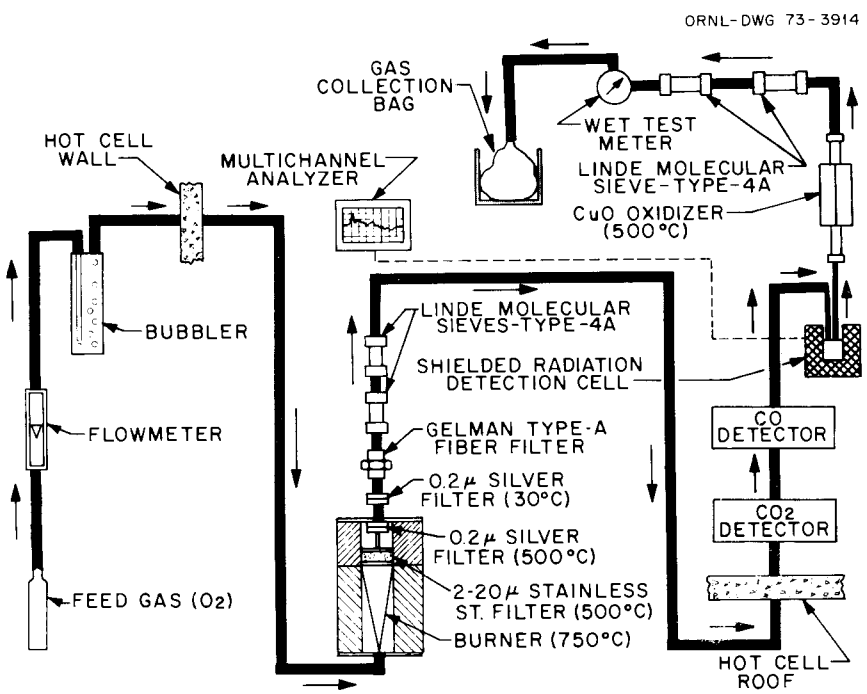

Fig. 2.2. Flowsheet for RTE-7 fuel stick burning.

Table 2.2. Uranium-thorium distribution in experiment RTE-7

	Uranium found		Thorium found	
	Amount (g)	% of total found	Amount (g)	% of total found
+42-mesh Fraction (fertile)				
L-1	0.05292	10.66	1.8424	94.92
L-2	0.00004	0.008	0.0046	0.24
Residue	0.00005	0.010	<0.0011	0.006
+80-mesh Fraction (fissile)				
L-1	0.43600	87.82	0.0850	4.38
L-2	0.00380	0.77	0.002	0.10
Residue	0.00024	0.05	<0.0002	0.01
−80-mesh Fraction (alumina)				
L-1	0.00240	0.48	0.0067	0.35
L-2	0.00004	0.0008	<0.0001	0.005
Residue	0.00091	0.18	0.0001	0.005
Total	0.49649		1.94102	

Table 2.3. Fission product distribution[a] in the leached burner products in experiment RTE-7

	Gross gamma activity (%)	^{95}Zr (%)	^{95}Nb (%)	^{106}Ru (%)	^{134}Cs (%)	^{137}Cs (%)	^{144}Ce (%)
+42-mesh Fraction (fertile)							
L-1	9.29	11.68	7.26	9.02	16.62	15.47	6.30
L-2	0.75	0.06	2.83	0.27	0.53	0.48	0.02
Residue	1.27	0.03	1.10	20.66	0.56	0.50	0.03
Total	11.32	11.78	11.20	29.97	17.71	16.46	6.36
+80-mesh Fraction (fissile)							
L-1	65.66	77.51	48.56	20.98	57.43	60.21	91.48
L-2	4.54	8.08	5.10	1.40	4.18	4.48	1.24
Residue	14.34	2.23	33.94	30.56	13.05	14.21	0.41
Total	84.57	87.78	87.60	52.94	74.70	78.95	93.13
−80-mesh Fraction (alumina)							
L-1	2.19	0.10	0.12	1.42	5.66	3.16	0.26
L-2	0.08	0.002	0.01	0.19	0.20	0.15	0.005
Residue	1.82	0.36	1.04	15.59	1.65	1.33	0.24
Total	4.08	0.47	1.17	17.20	7.51	4.63	0.505

[a]Expressed as percent of total found.

the fissile fraction, while 79% of the ^{134}Cs and ^{137}Cs were with the fissile fraction. Most of the remaining Cs was associated with the initial (matrix) burn. Only a small fraction of activity came off during the fertile burn.

The ^{85}Kr and ^{3}H results obtained in the repeat experiment are given in Table 2.4. These results differ from the previous data in two significant ways: considerably more ^{85}Kr and ^{3}H were collected (twice as much and five times as much, respectively), and a much smaller fraction of the ^{3}H was released during the roasting period at the conclusion of the fissile burn. The present data show that, for this type of fuel, a rather large fraction of the ^{85}Kr is released during grinding, but that combustion is required to release the ^{3}H. Furthermore, a small, but not negligible, quantity of ^{3}H is bound rather tightly in the burned fissile fraction and additional time at temperature is required to force its release.

Table 2.4. Tritium and krypton release behavior in experiment RTE-7 repeat

	% of total ^{3}H released	% of total ^{85}Kr released
Initial burn (matrix)	26.00	0.13
Fertile fraction (+42 mesh)		
Grind	0.06	0.22
Burn (3 hr)	13.23	3.22
Roast (2 hr)	0.21	
Leach	0.02	0.02
Total	13.52	3.46
Fissile fraction (−42 +80 mesh)		
Grind	0.01	19.02
Burn (3.3 hr)	56.47	77.38
Roast (2 hr)	2.24	0.0
Roast (8 hr)	1.66	
Leach	0.04	0.13
Total	60.42	96.52
Fines leach (−80 mesh)	0.06	0.01

2.2 BURNER OFF-GAS DECONTAMINATION STUDIES

The use of liquid CO_2 as a medium for separating noble gases from burner off-gas appears to be the most expedient method for cleanup of HTGR burner off-gas.[4] Flowsheets based on complete liquefaction at high pressure and rectification are being developed elsewhere.[5] Our process, which was primarily designed for krypton removal, is composed of two parts: absorption of krypton from the burner off-gas in liquid CO_2 and the closely coupled fractionation and return of gases coabsorbed with the krypton, and stripping of the absorbed krypton from the liquid CO_2 and its associated rectification for yielding a concentrated krypton product and decontaminated liquid CO_2 for the absorption operation. It may also be possible to concentrate iodine and/or tritium (as tritiated water) via the KALC process; our laboratory work is being directed this way (Sect. 2.4), and Jülich is also considering this possibility.[5]

The Rare Gas Removal Pilot Plant[6] at the Oak Ridge Gaseous Diffusion Plant (ORGDP) was used to explore the operability of a KALC (*K*rypton *A*bsorption in *L*iquid *C*O_2) system. An initial campaign was designed to provide experience necessary for subsequent KALC system development. Although not built for KALC-type operation, the ORGDP system provided a means of qualitatively evaluating some important operations required in the KALC process such as CO_2 liquefaction, vapor-liquid contacting, and partial condensation.

Following the feasibility demonstration of KALC at the ORGDP pilot facility for krypton and xenon removal, a program was organized for an efficient study of HTGR off-gas decontamination. This program includes modification of the existing ORGDP pilot facility for development of a complete krypton removal train. Moreover, the Off-Gas Decontamination Program provides for construction of an experimental facility at ORNL which will permit engineering and laboratory studies to be carried out.

The ORGDP pilot operation will be used primarily for demonstrating integrated operation of the complete off-gas systems. Limited scaleup information will also be obtained. Because the KALC system is unusual and the domain of its operating variables essentially unexplored, there is a lack of essential basic design data for it. The experimental engineering off-gas facility to be built at ORNL will provide such basic information. Mass transfer data will be obtained as the primary objective, but secondary objectives will include studies of component performance, control procedures, and general operational techniques. Although the ORNL facility will be smaller than the ORGDP Pilot Plant, it will be large enough to provide meaningful engineering data. A $1\frac{1}{2}$-in.-diam packed column will be used for the absorption studies; a 3-in.-diam packed column will be used for the stripping studies. Both columns will be operated simultaneously to allow complete recycle operation. A schematic diagram of the experimental engineering equipment to be included in the ORNL facility is shown in Fig. 2.3. Design effort, fabrication scheduling, system layouts, and procurement of equipment for the ORNL and ORGDP facilities are proceeding on schedule. Modifications to the ORGDP facility and fabrication of the ORNL engineering equipment are now in progress.

4. R. W. Glass, P. A. Haas, R. S. Lowrie, and M. E. Whatley, *HTGR Head-End Processing: A Preliminary Evaluation of Processes for Decontaminating Burner Off-Gas,* ORNL-TM-3527 (July 1972).

5. M. Laser et al., "Off-Gas Treatment and Krypton Disposal in HTGR-Fuel Element Reprocessing," paper presented at the Symposium on the Management of Radioactive Wastes from Fuel Reprocessing, Paris, France, Nov. 27–Dec. 1, 1972.

6. M. J. Stephenson et al., *Experimental Investigation of the Removal of Krypton and Xenon from Contaminated Gas Streams by Selective Absorption in Fluorocarbon Solvents: Phase I Completion Report,* K-1780, Oak Ridge Gaseous Diffusion Plant (August 1970).

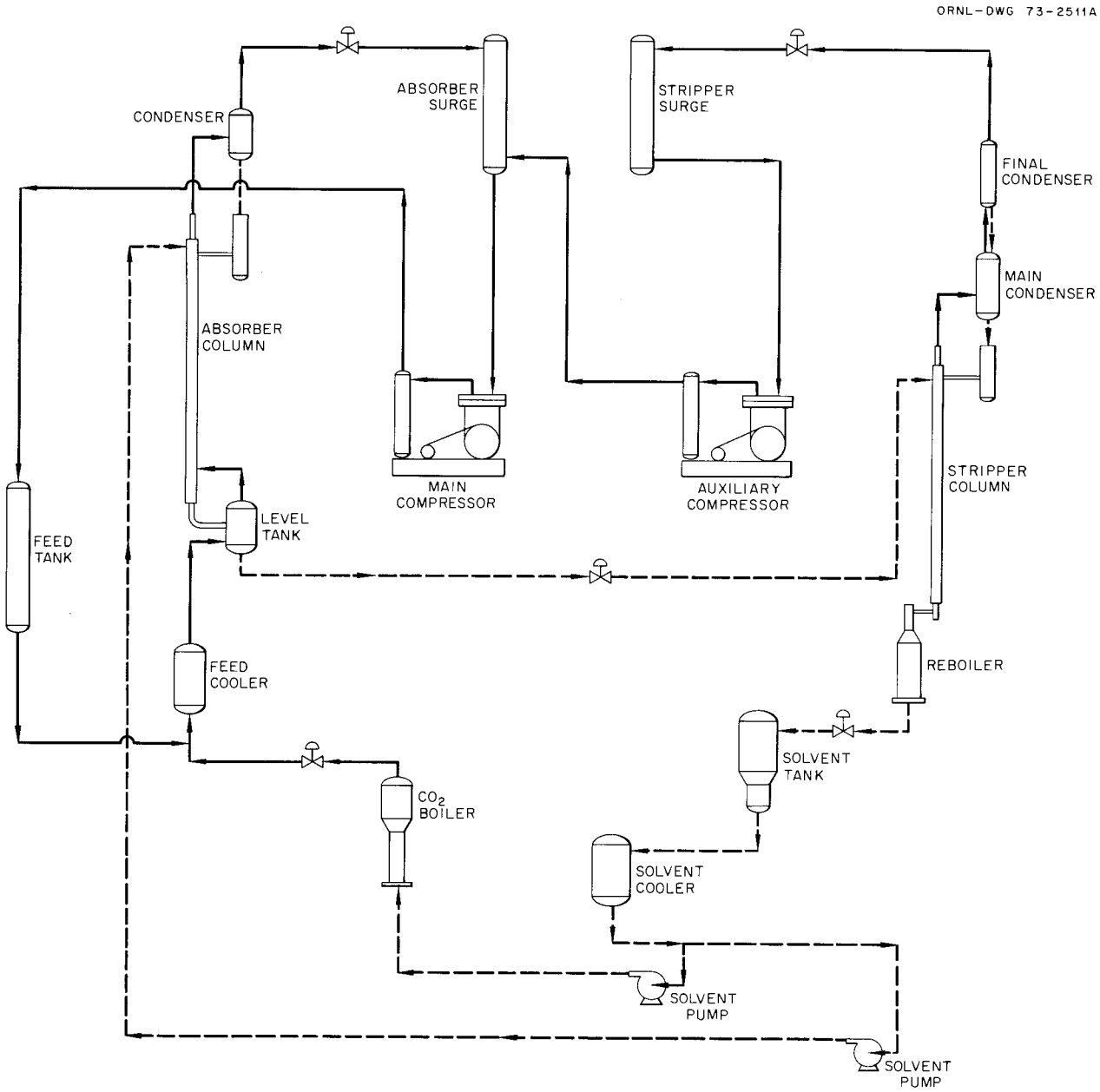

Fig. 2.3. Schematic diagram of the experimental engineering equipment to be included in the ORNL off-gas decontamination facility.

An important basis for confidence that the KALC process will effect acceptable decontamination of Kr from the HTGR burner off-gas and will yield the separated Kr in a form sufficiently concentrated for simple disposal lies in our understanding of the relative behavior of Kr and the light gases, O_2, N_2, and CO, in a saturated CO_2 system. This information has been compiled, correlated, and incorporated into a computer model of the KALC system.[7] This model considers either the absorber-fractionator part of the flowsheet or the stripper-rectifier part, but does not couple them. The weak dependence each part was shown to have on the other justifies this decoupling. By using the best

7. M. E. Whatley, *Calculations on the Performance of the KALC Process*, ORNL-4859 (April 1973).

literature data available for the distribution of O_2, N_2, and CO between the vapor and liquid phases, along with the Kr distribution data developed by Notz and Meservey,[8] and by allowing for temperature and flow variations through the incorporation of enthalpy data, we believe the system to be sufficiently well described to yield calculated results worthy of confidence. These calculations indicate that the KALC process is feasible and provide insight into the areas of development requiring attention. However, the full utility of the computer model will not be realized until our experimental program is under way.

2.3 WHOLE-BLOCK BURNER STUDIES[9]

Recovery of bred ^{233}U and unburned ^{235}U from spent HTGR fuel elements entails separation of the fissile and fertile particles from the much larger amount of graphite. In the reference reprocessing flowsheet, this is accomplished by crushing the fuel element and then burning the crushed material in a fluidized-bed burner. Since the crushing and burning steps release fission products in both gaseous and particulate form, complete containment and decontamination of the cover gas of the crushers and of the burner off-gas are necessary. Further, crushing and fluidized-bed burning promise to be challenging operations to carry out in hot cells. For these reasons, we have continued a low-level development effort relative to the concept of burning the whole fuel block as a backup to block crushing and fluidized-bed burning. The primary aim of this effort has been to show that practical burning rates are attainable in a whole-block burner. Secondary objectives are to develop preliminary concepts for full-scale whole-block burners and to pinpoint the areas in which further development effort is needed.

The proposed reprocessing pilot plant at the Idaho Chemical Processing Plant (ICPP), which will have a capacity of 12 Fort St. Vrain reactor fuel elements per day, will require an average burning rate of 0.83 kg of graphite per minute. A full-scale reprocessing plant handling 1 metric ton of heavy metals per day will require a burning rate about ten times that high. A full-scale plant will use multiple burners; the minimum graphite burning capacity of a single unit should be at least the 0.83 kg/min required for the pilot plant at ICPP.

We have demonstrated a carbon burning rate of 130 g/min in the one-sixth-scale block burner. Depending on the method used to calculate burning rate for a full-scale whole-block burner, values ranging from 780 to 1020 g/min may be calculated from the demonstrated rate. (This is equivalent to 31 to 41 kg of carbon per hour per square foot for a 17-in.-diam burner). The expected rate for the fluidized-bed burner is 30 kg of carbon per minute per square foot.

Description of Test Equipment

The HTGR fuel elements are hexagonal graphite blocks, about 30 in. high and approximately 14 in. across the flats, that contain both coolant and fuel stick holes. The layout of the fuel holes permits the fuel element to be cut (in an axial direction) into six pieces without disturbing the fuel sticks. The test burner, which was sized to use one-sixth of a fuel element, was fabricated from a 4-ft length of 10-in. sched 40 type 347 stainless steel pipe flanged on each end (see Figs. 2.4 and 2.5). Cooling air is passed through the annulus between the liner and outer shell. Provision was also made to cool the vessel heads. Thermocouples are provided for measuring internal temperatures, liner temperatures, and outer shell temperatures. Initially, the fuel block sat on a grate, which, in turn, rested on a pan for collecting the particles. Later, the pan was replaced with a funnel. The combustion feed gas enters the top of the vessel; hence the direction of burning is downward, with the fuel block remaining stationary. Particles drop into the funnel as they are released from the fuel stick matrix and are swept out with the off-gas into the combined cyclone–filter collection vessel.

Experimental Results

The results of 20 runs made with the one-sixth-scale block burner are discussed below.

Burning conditions. A graphite burning rate of 0.83 kg/min or higher can result in high temperatures in the burning zone. The temperature of the burning graphite affects the CO/CO_2 ratio in the off-gas and the release of those fission products that are expected to be volatile (e.g., Ru, I_2, Tc, ^3H, and Cs). Further, some of the fuel elements to be reprocessed contain TRISO-coated particles which, according to present plans, must be kept mostly intact; thus, the maximum temperatures of the graphite should be held at least several hundred degrees below the temperature (~1800°C) at which

8. M. E. Whatley, R. W. Glass, P. A. Haas, A. B. Meservey, and K. J. Notz, "Decontamination of HTGR Reprocessing Off-Gases," presented at the 12th Air Cleaning Conference, Oak Ridge, Tenn., Aug. 28–31, 1972; CONF-720823 (January 1973), Vol. 1, pp. 86–99.

9. This work was done by Dr. Heidrun Barnert-Wiemer, guest scientist from Jülich, West Germany.

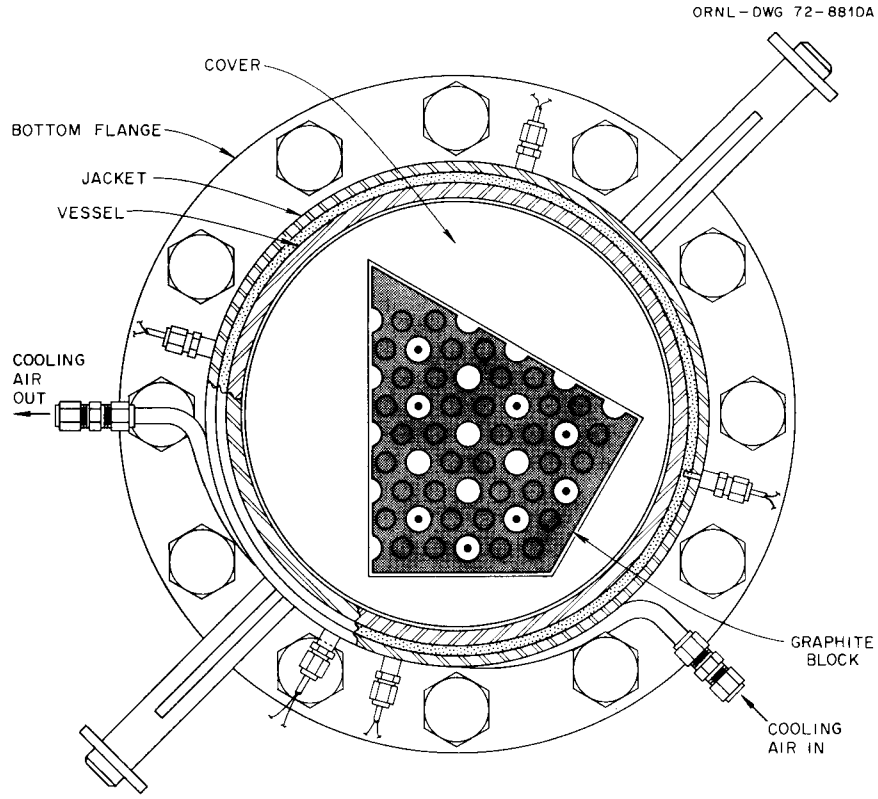

Fig. 2.4. Sectional view of the one-sixth-scale block burner.

highly irradiated TRISO-coated particles start "popping." This puts the maximum graphite block temperature in the 1300 to 1400°C range, which is the maximum temperature range the particles will encounter in the reactor, and reduces the possibility of particle coating breakage due to thermal stress. The criteria for burning were to keep the maximum block temperature below 1400°C and to maintain the wall temperatures below 900°C (i.e., the design temperature).

Carbon monoxide and carbon dioxide are formed in the combustion of carbon – the former in the presence of excess carbon, the latter in an excess of oxygen. Since the one-sixth-scale block burner operates with an excess of graphite, the burner off-gas should be composed almost entirely of CO at the temperatures used for the burner. Experimentally, however, we find that only CO_2 is present in the off-gas until the block temperatures reach 1200°C. When the block temperatures are increased to between 1300 and 1400°C, the CO concentration ranges from 15 to 25%. We assume that, at the low oxygen flow rates used for the experiments, the CO is partially oxidized in the gas phase before leaving the burner. This assumption has not been verified because the gas flow capacity of the burner used in our studies is limited. The flow in each run was laminar, with Reynolds numbers below 1500.

At gas velocities below 1 m/sec in the coolant holes, the burning rate was so low that the oxygen was not used up and thus was found at significant concentration in the off-gas (up to 20%). We assume that both the main stream and the boundary layers are laminar at very low flow rates. If the gas velocity is higher than 1 m/sec, the boundary layer becomes turbulent, even though the main stream is still laminar. One would expect an even higher burning rate when the main stream becomes turbulent; however, because of the limited flow capacities of the burner, turbulent flow could not be attained.

As mentioned above, oxygen utilization is not complete at very low flow rates or when some of the oxygen passes around the block instead of through the coolant holes. In the initial tests, only one baffle was provided around the block and the oxygen consumption was 94% at steady state for runs with velocities higher than 1 m/sec. Once the block was burned down to this baffle, the amount of oxygen in the off-gas steadily increased. After we had installed five close-

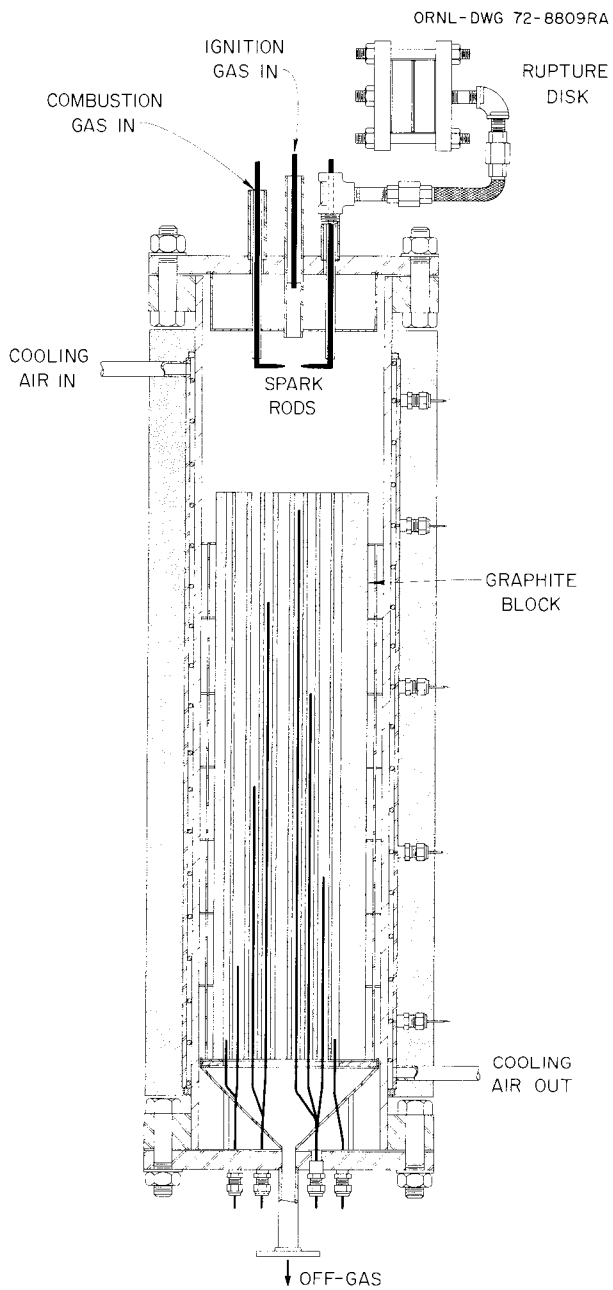

Fig. 2.5. One-sixth-scale block burner.

fitting baffles to force the oxygen through the coolant holes, the oxygen consumption rose to 99%; about two-thirds of the block could be burned before the oxygen content of the off-gas began to increase.

The off-gas system for the one-sixth-scale burner consisted of a 7-in.-diam cyclone (located 20 ft below the outlet of the burner) with two internally mounted sintered metal filters (pore openings, 20 μ) followed by a packed fiber glass filter (6 in. in diameter by 13 in. long). The maximum amount of graphite removed from the cyclone in any run was about 2 wt % of the burned graphite. It appears that the amount of graphite transferred out of the burner is primarily a function of the diluent gas flow rate. The amount of graphite removed from the burner varied from a negligible amount at no diluent flow up to 2% at very high diluent flows. The packed fiber glass filter contained only a very small amount of graphite at the point where the inlet gas impinged directly onto the packed fiber glass bed.

We found no noticeable influence of the pressure on the burning rate over the pressure range 1 to 20 psig. (The rupture disk would crack at 25 psig.)

Heat removal and temperature control. Some of the heat from the oxidation reaction is removed from the burner as sensible heat in the off-gas stream. In the one-sixth-scale burner, the remaining heat is radiated to the walls where some heat is transferred to the wall cooling air, and the rest is radiated to the cell atmosphere.

One run was made with countercurrent cooling air flow. The countercurrent flow proved less efficient than the cocurrent flow. About the same amount of heat is removed in both cases; however, in countercurrent flow, the cooling air is heated up at the hot, lower part of the burner and reaches the burning zone with a higher temperature than is the case with cocurrent flow, in which the cooling air passes the colder, upper part of the burner. Thus the temperature difference between the air and the furnace wall in the burning zone is smaller with countercurrent flow and, consequently, less heat is removed, provided the amount of gas is the same in each case. Therefore, with countercurrent flow, about 20% more cooling air was required to keep the wall temperatures in the burning zone below the upper limit of 950°C; as one would expect, the off-gas temperature was lower with this mode of flow.

The introduction of CO_2 into the combustion feed gas may be used to control heat generation and removal. Tests with nitrogen as the diluent show that it has the same effect as CO_2, but about 60% more gas is required since nitrogen has a lower heat capacity.

Since an excess of graphite is always present in the burner and the oxygen flow rate is fixed by the desired burning rate, control of the burner temperature is restricted to two heat-removal mechanisms: (1) removal of heat from the burner wall by cooling air, radiation, conduction, etc.; and (2) the use of a diluent gas, preferably CO_2, to remove sufficient heat to maintain the desired block temperature.

Product recovery and particle breakage. Particles released from the fuel stick matrix during runs 1 through 15 were collected in a pan positioned directly below the grate that supported the fuel block. Consequently, the particles were exposed to a hot, oxidizing atmosphere for the entire burning period, a time sufficient to ensure that any graphite associated with the collected particles, whether in the form of unburned coatings or of dust, would be burned away. Thus, in the three runs using fuel blocks containing fuel sticks made by extruding a mixture of graphite, binder, and TRISO-coated ThC_2 particles, visual examination of the collected particles showed that the outer pyrocarbon coating has been burned away. The overall particle breakage was about 5%.[10]

One run was made using a fuel block that contained fuel sticks made by the injection molding technique at ORNL with TRISO-coated UO_2 and BISO-coated ThO_2 particles. The graphite burning rate was 55 g/min; the block temperatures were between 1200 and 1400°C. Examination of the collected particles showed that the BISO coating on the ThO_2 particles had been burned off, as was the case for the outer pyrocarbon coating on the TRISO-coated UO_2 particles. In a subsequent leaching of the collected particles with Acid Thorex reagent, 0.55% of the uranium and 99.8% of the thorium reported to the leachate. This means that very few of the TRISO coatings were broken and confirms that the BISO coatings had been burned away, subsequently exposing the ThO_2 kernel to the Acid Thorex leachant.

After run 16 the collection pan was replaced by a funnel so that the released particles dropped into the funnel and were swept out with the off-gas into the combined cyclone–filter collection vessel. This system was first used in burning a fuel block containing fuel sticks made at ORNL with BISO-coated $(4Th,U)O_2$ particles. The graphite burning rate was 125 g of carbon per minute. Block temperatures were 1200 to 1300°C. Visual observation of the recovered particles indicated that the BISO coatings were not completely burned away from the oxide kernel when the particles fell from the fuel stick matrix. Analyses showed that approximately 70% of the BISO coating was unburned. This indicates the need for a secondary burner to complete the burning of the BISO coatings and any graphite dust. After the remaining BISO coating had been burned off at 750°C in air, the particles were leached, first in 2 *M* HNO_3 and then with Acid Thorex reagent. About 1% of the uranium and 0.2% of the thorium reported to the 2 *M* HNO_3 leachate; the remaining thorium and uranium were found in the Acid Thorex leachate. Apparently, there was some preferential leaching of the uranium.

Burner capacity. The maximum burning rate obtained with the one-sixth-scale block burner was 130 g of carbon per minute, which was sustained for a period of 30 min. During this period about 4 kg of graphite was burned, operation of the burner was stable, and the burning zone moved downward approximately 6 in. Baffles were used to force most of the combustion feed gas to pass through the 13 open coolant holes.

Burner startup and shutdown. We chose to heat the block to ignition temperature using a CO-O_2 torch. The torch was lit by means of a high-voltage arc. To ensure safe operation, certain safety interlocks were provided. Loss of the arc (which exists as long as the torch is lit), loss of the flame, or a drop in the temperature of the torch tip would immediately terminate the CO flow. The torch would not be relighted unless the CO concentration in the off-gas was less than 5%.

At least half of the block should be at a temperature of 800°C or higher before the combustion feed gas is turned on. The best startup procedure is to gradually decrease the flow rate of gas to the torch while increasing the combustion gas feed flow rate over a 5- to 10-min period. There is a slight oxygen concentration peak in the off-gas when the torch is shut off, but it disappears in 15 min or less. Simply shutting off the torch and turning on the combustion feed gas results in a large oxygen concentration peak, and 1 to 2 hr is required to reach steady state. Pure oxygen should be used as the combustion feed gas for the startup period.

Shutdown is accomplished by turning the oxygen flow off and starting a flow of inert purge gas, preferably CO_2.

2.4 LABORATORY STUDIES

Laboratory work being done in support of the KALC process for removing krypton from CO_2 includes fundamental studies in which data needed for evaluation of the KALC process are being obtained for the Kr-CO_2 system as well as for systems involving Xe, O_2, N_2, CO, H_2O, and I_2. The distribution of Kr and Xe is our first interest, but the behavior of iodine and water (tritiated) is also of major concern. During this report period, measurements of the solubility of krypton in

10. These particles were reject TRISO-coated ThC_2 particles obtained from Gulf General Atomics. Since the breakage during fabrication is unknown, the breakage caused by burning would range from 0 to 5%.

liquid CO_2 were completed, efforts regarding the CO_2-H_2O-I_2 system showed good progress, and studies of the CO_2-Xe and Kr-H_2O systems were initiated.

Detailed engineering design of a KALC-type system to separate krypton from CO_2 requires knowledge of the Kr-CO_2 separation factors at the operating temperatures. Since the limited information available on this system was not in good agreement,[11] a careful study was made to determine experimentally precise values of Kr-CO_2 separation factors over the entire liquid range of CO_2. The method used was based on in situ counting of ^{85}Kr radioactive tracer. The equipment that was assembled for this experiment and our early results with this system were described in a previous report.[11] Partial results were reported at two meetings held during this report period.[8,12] A final report is currently in preparation; a summary of the results is given below.

Data on the solubility of Kr in CO_2 are expressed as separation factors, Y/X, where Y is the mole fraction of Kr in the gas phase and X is the mole fraction of Kr in the liquid phase. These data are presented graphically in Fig. 2.6. Over the temperature range −50 to 20°C, the data fit the equation

$$\log (Y/X) = 0.709 - 0.1395T\ (^\circ C)$$

with a correlation coefficient of 0.9992. Above 10°C, as the critical temperature of CO_2 is approached, the curve falls off rapidly toward a value of unity, as expected. Other constants can be calculated from the separation factors. The Henry's law constant is approximately 6×10^{-3} atm^{-1} over the range −50 to 20°C. The Ostwald coefficient remains more or less constant, as it should, while the Bunsen coefficient varies systematically. From the temperature dependence of the Bunsen coefficient, the heat of solution of krypton in CO_2 can be determined by using a modified form of the Clausius-Clapeyron equation. The values obtained are −900 cal/mole at −50°C and −130 cal/mole at 20°C (the heat of solution must, of course, be zero at the critical temperature).

We have now started work on the Xe-CO_2 system, using the same equipment and ^{133}Xe as the tracer.

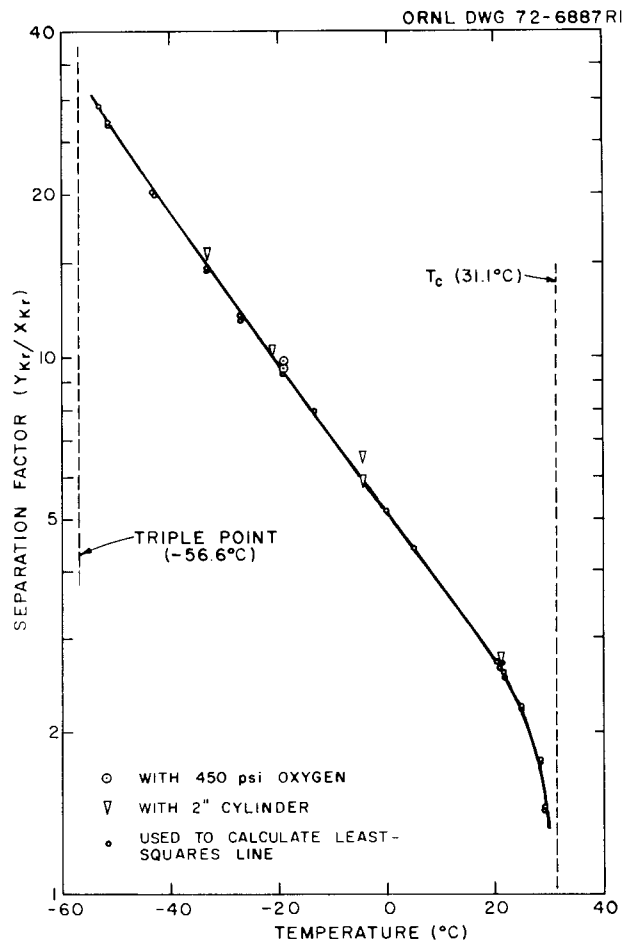

Fig. 2.6. Krypton distribution between gaseous and liquid CO_2.

When this work has been completed, we will examine the solubility of krypton in various electrolytes. We have already measured the solubility of krypton in pure water by this technique, and the results are in excellent agreement with published data.

The CO_2-H_2O-I_2 system is of interest because of the presence of ^{3}H and I_2 in the irradiated fuel. The volatility of these components makes their presence in the off-gas a virtual certainty (^{3}H will, of course, be converted to H_2O in the burner). A spectrophotometric study of this system has been started. The spectrum of I_2 in liquid CO_2 is very similar to that of I_2 in CCl_4 and in *n*-hexane. In CO_2 a very slight shift is noted (maximum at 5130 Å vs 5150 Å in CCl_4). Preliminary results indicate that, when the CO_2 is "wet," I_2 disappears at a rate which is first order with respect to I_2 concentration. It is believed that this is due to reaction of the I_2 with H_2O. Numerous reactions occur

11. *GCR-TU Programs Annu. Progr. Rep. Sept. 30, 1971,* ORNL-4760, p. 22.

12. R. W. Glass et al., "Removal of Krypton from the HTGR Fuel Reprocessing Burner Off-Gases," presented at the American Nuclear Society Annual Meeting, Las Vegas, Nev., June 1972; abstract published in *Trans. Am. Nucl. Soc.* 15(1), 95 (1972).

between I_2 and H_2O,[13–16] including:

$$I_2 + H_2O \rightarrow H^+ + I^- + HOI,$$

$$I_2 + H_2O \rightarrow H_2OI^+ + I^-,$$

$$3I_2 + 3H_2O \rightarrow 6H^+ + 5I^- + IO_3^-,$$

$$I_2 + H_2O \rightarrow 2H^+ + 2I^- + \tfrac{1}{2}O_2.$$

This work[17] will be continued, with emphasis on identification of the I_2-H_2O reaction products in liquid CO_2 and determination of the reaction kinetics.

---

13. T. Moeller, *Inorganic Chemistry,* p. 421, Wiley, New York, 1952.

14. A. E. J. Eggleton, *A Theoretical Examination of Iodine-Water Partition Coefficients,* AERE-R-4887 (February 1967).

15. Y. Nishizawa et al., "Vapor-Water Partition Coefficients of Iodine and Organic Iodides," *Nippon Genshiryoku Gakkaishi* **11**, 205–10 (1969); English translation ORNL-tr-2255.

16. L. F. Parsly, *Design Considerations of Reactor Containment Spray Systems – Part IV. Calculation of Iodine-Water Partition Coefficients,* ORNL-TM-2412 (January 1970).

17. This work is being done in collaboration with Dr. Clifford Thompson of Memphis State University, Memphis, Tenn.

3. Molten-Salt Reactor Processing

Until recently, the Oak Ridge National Laboratory was engaged in developing a molten-salt breeder reactor (MSBR) which would operate on the ^{232}Th-^{233}U fuel cycle to produce low-cost power while producing more fissile material than is consumed. Work in support of this reactor concept was discontinued late in January 1973 when the Molten-Salt Reactor Program (MSRP) was terminated.

The reactor would use a molten fluoride salt as the fuel and graphite as the moderator. In order for the reactor to be operated as a breeder, ^{233}Pa would have to be isolated from the region of high neutron flux during its decay to ^{233}U. Also, it would be necessary to remove the rare-earth fission products on a 25- to 100-day cycle. The Chemical Technology Division was responsible for developing an on-site processing plant to economically effect these operations. Processes that employ liquid-liquid extraction of the reactor salt with a bismuth phase containing reductant appeared to offer the best means to this end and were the major subjects of our studies.

The reference processing plant flowsheet (Fig. 3.1) uses fluorination for removal of uranium from the fuel salt, reductive extraction for isolation of protactinium, and the metal transfer process for the removal of rare earths. For a 1000-MW(e) MSBR, fuel salt is removed from the reactor at the rate of 0.88 gpm, which results in a processing cycle time of 10 days. The fuel salt has the composition 71.67-16-12-0.33 mole % LiF-BeF_2-ThF_4-UF_4 and contains $^{233}PaF_4$ and rare-earth fluorides at concentrations of about 100 wt ppm. The salt is first fed to a fluorinator where 99% of the uranium is removed as UF_6. The salt stream leaving the fluorinator is countercurrently contacted with a 0.13-gpm bismuth stream that contains reductant in order to extract protactinium and the remaining uranium. The bismuth stream leaving the extractor is hydrofluorinated in the presence of a secondary fluoride salt in order to transfer the extracted materials from the bismuth to the salt. The secondary salt flows through a fluorinator, where 90% of the uranium is removed, and through a 160-ft^3 tank in which the protactinium is held for decay to ^{233}U. Lithium reductant is added to the bismuth stream leaving the hydrofluorinator, and the resulting stream is returned to the protactinium extractor after passing through a captive bismuth phase in the rare-earth removal system.

The salt stream leaving the protactinium extraction column is essentially free of uranium and protactinium but contains the rare earths at about the concentration present in the reactor. The salt stream is countercurrently contacted with a 12.5-gpm bismuth stream containing reductant in order to extract 20 to 50% of the rare earths. The bismuth stream leaving the extractor is then countercurrently contacted with a 33-gpm stream of molten LiCl into which the rare earths transfer selectively. The LiCl is countercurrently contacted with a 5-95 at. % Li-Bi stream in order to remove the trivalent rare earths. About 2% of the LiCl is contacted with a 50-50 at. % Li-Bi solution for removal of the divalent rare earths. The processed fuel carrier salt leaving the rare-earth extractor is combined with the required quantity of UF_6 resulting from fluorination in order to reconstitute the fuel salt. In this operation, the UF_6 is absorbed into salt containing UF_4 in order to form UF_5, which is subsequently reduced to UF_4 by contact with hydrogen. The resulting salt stream is then purified for removal of bismuth and other potentially harmful materials before it is returned to the reactor.

3.1 MOLTEN-SALT REACTOR FLOWSHEET ANALYSIS

We have reported previously[1] on the development of a computer code that can be used for calculating steady-state concentrations and heat generation rates in an MSBR processing plant. The behavior of a total of 687 nuclides in as many as 250 regions can be

1. *Chem. Technol. Div. Annu. Progr. Rep. Mar. 31, 1972*, ORNL-4794, p. 3.

considered; however, the use of only about 70 regions has been adequate for representing the processing plant flowsheets studied thus far. Several modifications were made in the computer program during this report period to facilitate its use and to allow an improved representation of equipment items. The more important modifications are as follows:

1. The extent of transfer of materials between phases present in a region can be limited by rate and/or equilibrium considerations rather than by equilibrium considerations alone.
2. The volumetric flow rates of streams in a flowsheet and the distribution ratios for materials that distribute between salt and bismuth phases are calculated by the program rather than being specified as input data, as was done initially.
3. An improved method was developed for specifying a flowsheet. This method, which requires only a description of the regions and specification of the streams in terms of origin and destination, allows representation of a new flowsheet in approximately 30 min rather than in 2 days, as was required previously.
4. A means was found for decreasing the required computer time to about 30% of that needed initially.
5. The computer code ORIGEN was incorporated in the program in order to permit the characterization of waste streams (produced by operations designated in a flowsheet) in terms of waste disposal hazard, levels of radioactivity, and heat generation after their discharge from a processing plant.

The modified computer program was used successfully for evaluating a number of flowsheets, which included the one shown in Fig. 3.1 as well as others that differ appreciably. During this study, a particularly interesting flowsheet, which appears to be superior to the reference flowsheet in various respects, was developed and partially evaluated.[2] This flowsheet allows for essentially complete recycle of transuranium elements to the reactor for burnup, thereby minimizing the difficulties associated with storage and disposal of radioactive wastes containing such materials. It also

2. L. E. McNeese, *Engineering Development Studies for Molten-Salt Breeder Reactor Processing No. 17*, ORNL-TM-4178 (in preparation).

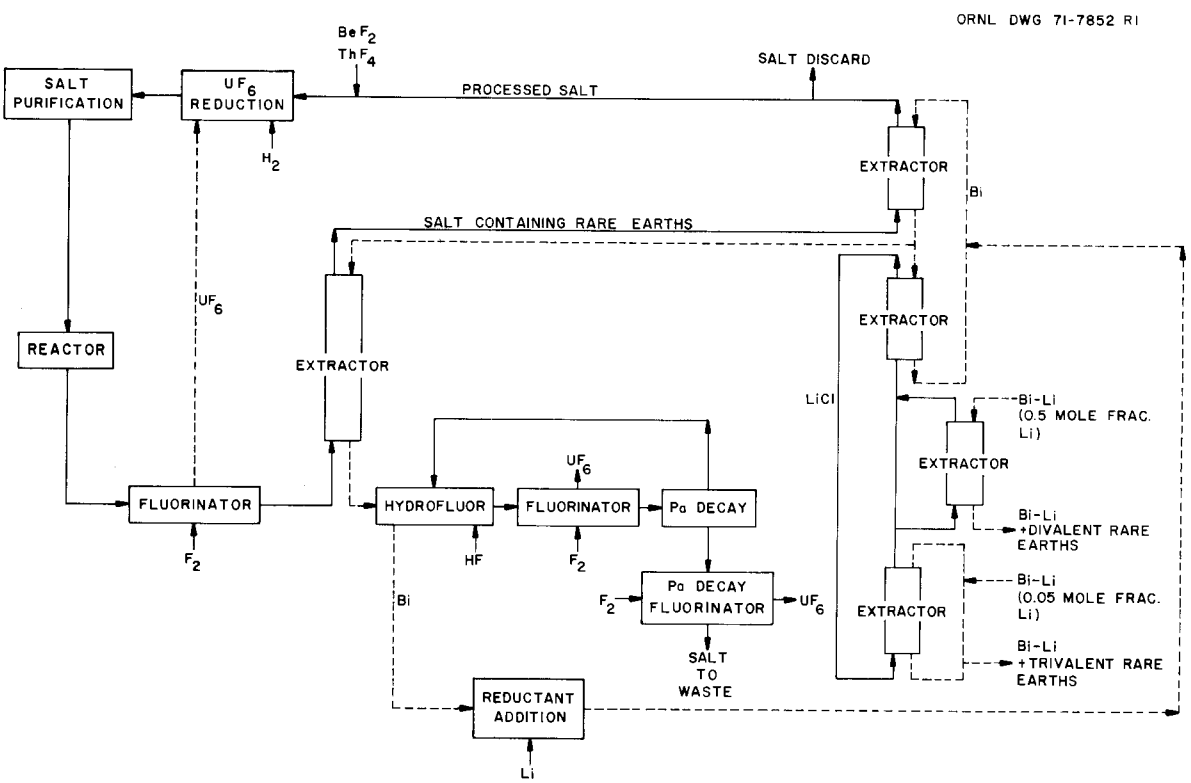

Fig. 3.1. Fluorination–reductive extraction–metal transfer flowsheet for processing a single-fluid MSBR.

allows for the complete recycle of fluorine and beryllium, which might otherwise be in limited supply. Lithium, which is present as essentially pure ^7Li, could also be recycled if this proved to be of interest. Other features of the flowsheet include the nearly complete utilization of thorium (as compared with a utilization value of about 10% with the reference flowsheet) and a substantial reduction in the volume of the waste streams produced by a reactor system. It did not appear that a processing system based on this type of flowsheet would be substantially more complex than one based on the reference flowsheet.

3.2 EQUILIBRIA IN FUSED-SALT–LIQUID ALLOY SYSTEMS

In connection with the development of the metal transfer process (see Fig. 3.1), we previously studied the equilibrium distribution of lithium and bismuth between liquid Li-Bi alloys and molten LiCl. The data were interpreted in terms of the distribution of salt-like Li_3Bi (i.e., $3Li^+ + Bi^{3-}$) between the two phases.[3] Work on this system was concluded by measuring the solubility of Li_3Bi in molten LiCl. The data obtained in the temperature range 650 to 800°C can be represented by $\log S$ (mole %) = $[3.437 - 4107/T(°K)] \pm 0.06$. Within experimental error, these values are the same as those obtained by Foster et al.[4] with LiCl-LiF (70-30 mole %) as the salt phase.

Data were also obtained at 650°C on the equilibrium distribution of lithium and bismuth between liquid Li-Bi alloys and molten LiBr, which is an alternative acceptor salt in the metal transfer process. These data were also interpreted in terms of the distribution of Li_3Bi between the two phases, and can be expressed as $\log N_{Li_3Bi(d)} = [4 \log N_{Li(m)} + 1.12 N_{Li(m)} - 2.192] \pm 0.2$, in which N is mole fraction and (d) and (m) denote salt and alloy phases, respectively. Comparison of these data with those obtained with LiCl as the salt phase indicates that Li_3Bi is about twice as soluble in LiBr as in LiCl. This result is consistent with the expectation that less work would be required to substitute large Bi^{3-} ions into the sublattice of molten LiBr since the Br^- ion is larger than the Cl^- ion.

Some measurements of the distribution of lithium and lead between liquid Li-Pb alloys and molten LiCl were made at 650°C to help ascertain whether lead could be used instead of bismuth in parts of the metal transfer process. The equilibrium lithium concentration in the LiCl increased dramatically with increasing lithium concentration in the alloy; however, the lead-to-lithium ratio in the salt was extremely low. Therefore, these results cannot be explained on the basis of the distribution of species such as LiPb, Li_3Pb, or Li_4Pb between the two phases. A possible equilibrium[5] is

$$2Li_{(m)} = Li_{2(d)} \,. \qquad (1)$$

From the expression for the equilibrium constant K for reaction (1), it can easily be shown that

$$\log N_{Li(d)} = 2 \log N_{Li(m)} + \left[\frac{2K\, \gamma_{Li(m)}{}^2}{\gamma_{Li_2(d)}} \right] , \qquad (2)$$

in which the gammas denote activity coefficients and $N_{Li(d)}$ is the mole fraction of lithium found in the salt by analysis. If the bracketed term is constant, a plot of $\log N_{Li(d)}$ vs $\log N_{Li(m)}$ would be linear with a slope of 2. The data obtained at 650°C gave such a plot and can be expressed by

$$\log N_{Li(d)} = [2 \log N_{Li(m)} - 2.322] \pm 0.2 \,.$$

Extrapolation of the data to $N_{Li(m)} = 1$ (i.e., to pure lithium as the metal phase) gives $N_{Li(d)} = (4.8 \pm 2.5) \times 10^{-3}$. This value is in good agreement with the value of $(5 \pm 2) \times 10^{-3}$ obtained by Dworkin et al.[6] for the solubility of lithium in LiCl at 650°C.

The results of this study also show that, although the equilibrium lead concentrations in the salt are low, the lithium concentrations are about as high as those obtained with Li-Bi alloys of comparable composition. Consequently, the use of lead instead of bismuth in the metal transfer process would not significantly reduce the rate of loss of lithium from the strip solutions.

3.3 SOLUBILITY OF THORIUM IN LIQUID Li-Pb ALLOYS

In order to consider lead as a substitute for bismuth in either the reductive extraction or the metal transfer portions of the reference flowsheet (Fig. 3.1) for the chemical processing of an MSBR, the solubilities of thorium in Li-Pb alloys should be comparable to those

3. *Chem. Technol. Div. Annu. Progr. Rep. Mar. 31, 1972*, ORNL-4794, p. 4.

4. M. S. Foster, C. E. Crouthamel, D. M. Gruen, and R. L. McBeth, *J. Phys. Chem.* **68**, 980 (1964).

5. M. A. Bredig, personal communication, May 18, 1972.

6. A. S. Dworkin, H. R. Bronstein, and M. A. Bredig, *J. Phys. Chem.* **66**, 572 (1962).

Table 3.1. Solubility of thorium in lithium-lead solutions

Li conc. in solution (at. %)	Temperature range (°C)	Thorium solubility, log S_{Th} (wt %) = $A + B/T$ (°K)	
		A	B
0	450–850	4.659	−5560
6.2	350–600	4.618	−5414
27	450–750	3.738	−4362

in Li-Bi alloys. Reported data[7,8] on the solubility of thorium in lead are in disagreement, and no information regarding the solubility of thorium in Li-Pb alloys could be found; consequently, we determined the solubility of thorium in lead and selected Li-Pb alloys over the temperature range 400 to 700°C. The apparatus and experimental procedure were basically the same as those used in our studies with bismuth systems.[9–12]

Thorium solubilities were measured in lead and three Li-Pb alloys. The data in each case could be expressed as $\log S_{Th} = A + B/T(°K)$. Values of A and B derived from the data are given in Table 3.1. The solubilities in lead are in agreement with, but slightly lower than, those reported by Shaffer et al.,[7] and are markedly lower than those reported by Bryner.[8] At a given temperature, the thorium solubility increases regularly with increasing lithium concentration in the alloy. This behavior is similar to that found previously with Li-Bi alloys.[11]

Under all conditions investigated, the solubilities of thorium in Li-Pb alloys were much lower than those in Li-Bi alloys of comparable lithium concentration. Consequently, Li-Pb alloys would not be attractive as substitutes for Li-Bi alloys in those parts of the processing system where thorium is involved.

3.4 PROTACTINIUM OXIDE PRECIPITATION STUDIES

We continued the studies concerning selective precipitation of protactinium oxide from molten $LiF\text{-}BeF_2\text{-}ThF_4$ (72-16-12 mole %) containing up to 0.25 mole % UF_4 by sparging the salt with $HF\text{-}H_2O\text{-}Ar$ gas mixtures. The data obtained were considered[13,14] in terms of the equilibrium

$$PaF_{5(d)} + 5/2H_2O_{(g)} = 1/2Pa_2O_{5(s)} + 5HF_{(g)}\,, \quad (3)$$

for which the equilibrium quotient at a given temperature can be written as:

$$Q_1 = \frac{p_{HF}{}^5}{p_{H_2O}{}^{5/2}N_{PaF_5}}\,. \quad (4)$$

In the above expressions, (d), (g), (s), N, and p denote dissolved species, gas, solid, mole fraction, and partial pressure (atm), respectively. Sixty measurements of Q_1 were made in the temperature range 530 to 670°C. These values, based on a least-squares fit, can be expressed as $\log Q_1 = [12.50 - 10690/T(°K)] \pm 0.2$.

In the experiments with uranium-bearing salt, the salt initially was sparged at a fixed temperature with an $H_2O\text{-}HF\text{-}Ar$ gas mixture in which the ratio $p_{HF}{}^2/p_{H_2O}$ was set to provide for precipitation of a significant amount of protactinium oxide but no attendant precipitation of $UO_2\text{-}ThO_2$ solid solution. Once equilibrium was achieved, the composition of the gas mixture was changed incrementally to produce progressively lower values of $p_{HF}{}^2/p_{H_2O}$. At each value of $p_{HF}{}^2/p_{H_2O}$, the salt was sparged at least one day to allow for attainment of equilibrium before a filtered sample of the salt was taken. The ratio $p_{HF}{}^2/p_{H_2O}$ was then lowered and the procedure repeated. In each experiment, the uranium concentration in the salt remained constant at its initial value while the protactinium concentration decreased with decreasing $p_{HF}{}^2/p_{H_2O}$ as a result of the precipitation of Pa_2O_5. Finally, a point was reached where the uranium concentration in the salt began to decrease. By assuming that, at this point, the salt became saturated with both Pa_2O_5 and a $UO_2\text{-}ThO_2$ solid solution, we could estimate values for the equilibrium quotient for the reaction

$$1/2Pa_2O_{5(s)} + 5/4UF_{4(d)} = PaF_{5(d)} + 5/4\,UO_{2(ss)}\,, \quad (5)$$

for which

$$Q_2 = \frac{N_{PaF_5}N_{UO_2}{}^{5/4}}{N_{UF_4}{}^{5/4}}\,. \quad (6)$$

7. J. H. Shaffer et al., *Reactor Chem. Div. Annu. Progr. Rep. Dec. 31, 1965*, ORNL-3913, p. 43.
8. J. S. Bryner, TID-7502, Part 1, p. 230 (1960).
9. L. M. Ferris, J. C. Mailen, J. J. Lawrance, F. J. Smith, and E. D. Nogueira, *J. Inorg. Nucl. Chem.* **32**, 2019–35 (1970).
10. C. E. Schilling and L. M. Ferris, *J. Less-Common Metals* **20**, 155 (1970).
11. F. J. Smith, *J. Less-Common Metals* **27**, 195 (1972).
12. F. J. Smith, *J. Less-Common Metals* **29**, 73 (1972).
13. *Chem. Technol. Div. Annu. Progr. Rep. Mar. 31, 1972*, ORNL-4794, p. 5.
14. O. K. Tallent and L. M. Ferris, *MSR Program Semiannu. Progr. Rep. Aug. 31, 1972*, ORNL-4832, pp. 165–67.

The mole fraction of UO_2 in the UO_2-ThO_2 solid solution, N_{UO_2}, was calculated from the analytical uranium concentration in the salt and the equilibrium quotient for the reaction

$$ThF_{4(d)} + UO_{2(ss)} = UF_{4(d)} + ThO_{2(ss)} \qquad (7)$$

reported by Bamberger and Baes.[15] Values of Q_2, obtained at four temperatures in the range 565 to 670°C, can be expressed as $\log Q_2 = [-0.826 - 605/T(°K)] \pm 0.04$. The insensitivity of Q_2 to temperature is to be expected if the solid phases present at equilibrium were those indicated by reaction (5).

3.5 CHEMISTRY OF FUEL RECONSTITUTION

The fuel reconstitution step in the MSBR processing flowsheet (Fig. 3.1) involves, first, reacting the UF_6 and excess fluorine from the fluorination step with UF_4 dissolved in fuel salt and, then, reducing the resultant higher-valent uranium species to UF_4 with gaseous hydrogen. The expected reactions are:

$$UF_{6(g)} + UF_{4(d)} = 2UF_{5(d)}\,, \qquad (8)$$

$$1/2F_{2(g)} + UF_{4(d)} = UF_{5(d)}\,, \qquad (9)$$

$$2UF_{5(d)} + H_{2(g)} = 2UF_{4(d)} + 2HF_{(g)}\,. \qquad (10)$$

In our previous work,[16] it was shown that, at 600°C, UF_6 reacted rapidly with UF_4 dissolved in LiF-BeF_2-ThF_4 (72-16-12 mole %). Chemical analyses indicated that UF_5 was indeed the reaction product, and that gold was inert both to gaseous UF_6 and to dissolved UF_5. More recently,[17] we confirmed spectrophotometrically that U^{5+} was present after adding UF_6 to a salt containing dissolved UF_4. Small translucent flakes of quenched samples of the resultant salt that, by chemical analysis, contained about 0.6% U^{4+} and 4% U^{5+} were positioned for maximum exposure in the sample beam of a Cary 14 spectrophotometer, and the spectrum was recorded at a scan rate of 25 Å/sec. No evidence for species other than U^{4+} was obtained in the visible region. However, scanning of the near-infrared revealed three intense and relatively sharp lines at about 1.33, 1.36, and 1.38 μ. The band at 1.36 μ was the strongest. These bands cannot be attributed to U^{4+}. However, the spectrum obtained was almost identical to the type II spectra obtained by Penneman, Sturgeon, and Asprey[18] with pentavalent uranium compounds such as $LiUF_6$, $NaUF_6$, and $CsUF_6$. Thus, these results provide independent evidence that dissolved UF_5 is the product of the reaction of gaseous UF_6 with UF_4 dissolved in LiF-BeF_2-ThF_4 (72-16-12 mole %).

Preliminary experiments were conducted in an apparatus fabricated entirely of gold in an attempt to determine equilibrium quotients for reaction (8) in the temperature range 550 to 650°C. In each experiment, enough UF_6 was added to LiF-BeF_2-ThF_4 (72-16-12 mole %) that contained about 1.3 wt % UF_4 to produce approximately an equimolar ratio of UF_5 and UF_4 in the resultant salt. The system was then maintained under a slight argon pressure (about 0.3 atm) for several days, with samples of both the salt and vapor phases being taken periodically. In each experiment, the total uranium concentration and the UF_5 concentration in the salt decreased regularly with time, whereas the UF_4 concentration remained relatively constant. The apparent partial pressure of uranium species in the vapor phase was less than 0.004 atm and did not vary systematically with temperature or time. When the apparatus was disassembled, a deposit of UF_4 was found on the cooler upper portions of the reaction vessel. Since the gold vessel had not been attacked, it seems likely that the UF_4 resulted from disproportionation of gaseous UF_5. The reactions occurring in our system probably were

$$UF_{5(d)} = UF_{5(g)}\,, \qquad (11)$$

$$2UF_{5(g)} = UF_{6(g)} + UF_{4(s)}\,, \qquad (12)$$

$$2UF_{5(d)} = UF_{6(g)} + UF_{4(d)}\,. \qquad (13)$$

In the past,[16,17] we assumed that any uranium found in the vapor phase resulted from the equilibrium represented by reaction (13); obviously, this is not the case. Regardless of the mechanism, however, our results show that the partial pressures of uranium-containing species are quite low in the vapor phase above LiF-BeF_2-ThF_4 (72-16-12 mole %) that contains dissolved UF_5.

In an attempt to introduce gaseous fluorine into salt containing dissolved UF_4, the gold sparge tube was

15. C. E. Bamberger and C. F. Baes, Jr., *J. Nucl. Mater.* 35, 177 (1970).

16. *Chem. Technol. Div. Annu. Progr. Rep. Mar. 31, 1972*, ORNL-4794, p. 6.

17. M. R. Bennett and L. M. Ferris, *MSR Program Semiannu. Progr. Rep. Aug. 31, 1972*, ORNL-4832, p. 164.

18. R. A. Penneman, G. D. Sturgeon, and L. B. Asprey, *Inorg. Chem.* 3, 126 (1964).

severely corroded. Thus, equipment much more sophisticated than that used in our work would be required for studies of the equilibrium represented by reaction (9).

3.6 REDUCTIVE EXTRACTION CHEMISTRY

Data on the reductive extraction of the actinides and zirconium were obtained in order to facilitate evaluation of flowsheets that provide for the efficient recycle of plutonium and the return of transplutonium elements to the reactor for burnup (see Sect. 3.1). The extraction behavior of titanium was also of interest since leaching of some of this element into MSBR fuel salt would be expected if the reactor containment vessel were fabricated of a modified Hastelloy alloy containing up to 2 wt % titanium. An alloy of this type is expected to be more resistant to radiation embrittlement than Hastelloy N.[19] Sufficient data on the extraction of the actinide elements from MSBR fuel salt into liquid bismuth solutions have been reported;[9,20] however, data for zirconium had been obtained only at 600°C.[9] In our recent studies, results were obtained for zirconium at 825°C, for titanium at 600°C, and for cesium and rubidium in the temperature range 600 to 800°C, using the apparatus and procedure described previously.[9] The salt phase in each case was $LiF\text{-}BeF_2\text{-}ThF_4$ (72-16-12 mole %). The information obtained for each element M at a given temperature could be represented in the usual manner,[9] $\log K_M' = \log D_M - n \log D_{Li}$, in which n is the oxidation number of M^{n+} in the salt phase and D_M is the distribution coefficient that is defined by

$$D_M = \frac{\text{mole fraction of M in Bi phase}}{\text{mole fraction of } MF_n \text{ in salt phase}} .$$

The data obtained for zirconium at 825°C yielded n = 4 and $\log K_{Zr}' = 10.84 \pm 0.3$. Using this in conjunction with the value of 14.683 ± 0.1 obtained at 600°C,[9] the following expression is obtained: $\log K_{Zr}' = [-4.056 + 16360/T(°K)] \pm 0.2$. Results obtained for titanium at 600°C did not clearly show that n was 3; however, thermodynamic considerations[21] indicate that this is the proper value for n. The value of 13.6 ± 0.4 obtained for $\log K_{Ti^{3+}}'$ at 600°C shows that titanium would be easily reduced from MSBR fuel salt into liquid bismuth solution, and is consistent with the results of an experiment by Moulton et al.[22] that indicated that $\log K_{Ti^{3+}}'$ should be greater than $\log K_{U^{3+}}'$. Ferris et al.[9] obtained $\log K_{U^{3+}}' = 11.1$ at 600°C.

The data obtained for cesium in the temperature range 600 to 800°C showed that n was 1 and can be expressed as $\log K_{Cs}' = [-0.5531 + 1771/T(°K)] \pm 0.05$. These values indicate that reductive extraction of cesium would be slightly easier than expected from the prior experimental data obtained at 650°C by Richardson and Shaffer.[23]

Data obtained for rubidium (n = 1) in the temperature range 600 to 800°C can be expressed as $\log K_{Rb}' = [-0.0958 + 950/T(°K)] \pm 0.04$. The value at 650°C, 0.934 ± 0.04, calculated from this equation is in excellent agreement with the value of 0.935 ± 0.06 reported previously by Richardson and Shaffer.[23]

3.7 REDUCTIVE EXTRACTION ENGINEERING STUDIES

We completed five additional mass transfer experiments in which the rates of transfer of ^{97}Zr and ^{237}U were measured by adding the tracers to MSBR fuel carrier salt (72-16-12 mole % $LiF\text{-}BeF_2\text{-}ThF_4$) prior to contacting the salt with bismuth containing reductant in an 0.82-in.-diam, 24-in.-long packed column. The experimental system and earlier experiments have been described previously.[24–26] About 30 to 80% of each of the tracers was observed to transfer to the bismuth during the present series of runs. The value for the height of an overall transfer unit based on the bismuth phase (HTU) increased from about 4.8 ft to 11.5 ft as the distribution coefficient for the transferring material was increased from about 1 to about 3. At very large (>200) distribution coefficient values, the height of an overall transfer unit based on the salt phase was about 1.4 ft.

The contents of the salt and bismuth samplers from runs made during this report period were routinely

19. H. E. McCoy et al., *Nucl. Appl. Technol.* 8(2), 156 (1970).

20. L. M. Ferris, F. J. Smith, J. C. Mailen, and M. J. Bell, *J. Inorg. Nucl. Chem.* 34, 2921 (1972).

21. L. M. Ferris, *Estimated Behavior of Titanium in MSBR Chemical Processing Systems*, ORNL-TM-3763 (April 1972).

22. D. M. Moulton, J. H. Shaffer, and W. R. Grimes, *MSR Program Semiannu. Progr. Rep. Feb. 28, 1970*, ORNL-4548, p. 176.

23. D. M. Richardson and J. H. Shaffer, *MSR Program Semiannu. Progr. Rep. Feb. 28, 1971*, ORNL-4676, p. 129.

24. *MSR Program Semiannu. Progr. Rep. Feb. 28, 1970*, ORNL-4548, p. 298.

25. *Chem. Technol. Div. Annu. Progr. Rep. Mar. 31, 1971*, ORNL-4682, pp. 20–24.

26. *Chem. Technol. Div. Annu. Progr. Rep. Mar. 31, 1972*, ORNL-4794, pp. 6–7.

drilled out using a small lathe and were subsequently dissolved in order to obtain more precise counting of the ^{237}U activity after it was found that significant attenuation of the 0.208-MeV gamma rays from the ^{237}U was occurring.[27] The extent of attenuation of the gamma activity was found to be about 59% for the solid bismuth samples and about 26% for the solid salt samples.

The first run carried out during this report period (UZTR-3)[27] was made with uranium and zirconium extraction factors of about 6. The extent of transfer of the tracers from the salt to the bismuth phase (80%) indicated an HTU value of about 6.5 ft. During the subsequent run (UZTR-4),[28] about 66% of each of the tracers transferred from the salt to the bismuth phase. The uranium and zirconium extraction factors during the run were about 5, and the indicated HTU values ranged from 10.5 to 11.5 ft.

A relationship was developed[28] for correlating the HTU values obtained at extraction factors near unity. It was found that the data from runs made with extraction factors near unity could be represented well by the derived relation, and that the resulting value for the height of an overall transfer unit based on the bismuth phase is 4.3 ft at extraction factors near 1. The data from runs UZTR-3 and UZTR-4, which were carried out with extraction factors greater than unity, diverged from the correlation in the expected manner.

Because of the importance of accurately knowing the values of the uranium and zirconium distribution coefficients in the present experiments, a series of measurements was carried out for verifying the reported temperature dependencies of the uranium and zirconium distribution coefficient data.[2] The measurements were made in the treatment vessel that contained about 20 liters each of the salt and bismuth phases. The bismuth contained sufficient reductant to produce a uranium distribution coefficient of about 10 at 625°C. Analyses of the series of salt and bismuth samples taken after the phases had reached equilibrium at 593, 657, and 705°C by wet chemical methods indicated a temperature dependence for the uranium distribution coefficient data that was consistent with previously reported[9] laboratory data. Values for the uranium distribution coefficient based on counting of the 0.208-MeV gamma radiation emitted by the ^{237}U were only about 60% of those determined by wet chemical analyses. Values for the zirconium distribution coefficient were obtained by counting the 0.743-MeV gamma radiation emitted by ^{97}Zr. The resulting zirconium distribution coefficient data are in good agreement with data obtained from laboratory experiments (see Sect. 3.6) both with respect to the effect of temperature and the effect of concentration of reductant in the bismuth phase.

An additional mass transfer experiment (UZTR-5) was completed[2] using uranium and zirconium extraction factors of about 5. About 60% of each tracer transferred from the salt to the bismuth during the run. The resulting HTU values for uranium and zirconium, which ranged from 10.5 to 11.5 ft, are about twice the values expected on the basis of previous experiments.

The experimental work was concluded with two mass transfer experiments that were made with very large values for the uranium and zirconium distribution coefficients in order to verify the results of initial mass transfer experiments which utilized a different experimental approach. The first experiment (UZTR-6)[2] was carried out with zirconium and uranium distribution coefficients of 750 and 125, respectively, and a bismuth-to-salt flow-rate ratio of 0.18. The extent to which each tracer transferred from the salt to the bismuth phase, 26% for ^{237}U and 32% for ^{97}Zr, was in reasonable agreement with values predicted by a relation developed earlier[29] for correlating data from uranium extraction experiments made with high values of the uranium distribution coefficient. In both the earlier and present experiments, the rate of transfer of uranium from the salt to the bismuth phase was controlled by the resistance to transfer of uranium in the salt phase.

The final mass transfer experiment (UZTR-7)[2] was carried out with uranium and zirconium distribution ratios of 230 and 1750, respectively, and a bismuth-to-salt flow-rate ratio of 2.8. The fractions of uranium and zirconium that transferred from the salt to the bismuth phase (75 to 77%) were lower than those predicted by the earlier correlation; however, it is not clear that the correlation is applicable to conditions employed during experiment UZTR-7.

The 24-in.-long, 0.82-in.-ID packed column was removed from the system for inspection after an operating period of two years. The distribution of the ¼-in. molybdenum Raschig ring packing was determined

27. L. E. McNeese, *Engineering Development Studies for Molten-Salt Breeder Reactor Processing No. 15*, ORNL-TM-4019 (in preparation).

28. L. E. McNeese, *Engineering Development Studies for Molten-Salt Breeder Reactor Processing No. 16*, ORNL-TM-4020 (in preparation).

29. L. E. McNeese, *Engineering Development Studies for Molten-Salt Breeder Reactor Processing No. 8*, ORNL-TM-3258 (May 1972), pp. 65–80.

radiographically prior to disassembly of the column for visual inspection. Consolidation of the packing via formation of a less random packing arrangement had occurred to the extent that the packing void fraction in the lower 18 in. of the column was 0.82 while that in the upper 9 in. of the column was 0.88. The initial packing void fraction was 0.84, and it is believed that the packing was uniformly distributed when the column was installed.[30]

30. L. E. McNeese, *Engineering Development Studies for Molten-Salt Breeder Reactor Processing No. 6*, ORNL-TM-3141 (December 1971), pp. 73–75.

3.8 DEVELOPMENT STUDIES FOR THE REDUCTIVE EXTRACTION PROCESS FACILITY

During this report period, design and development efforts relative to the reductive extraction process facility (REPF) were initiated. Completion of this work would have allowed testing and development of equipment suitable for use in a full-scale protactinium removal process based on fluorination–reductive extraction. A flow diagram for the facility is shown in Fig. 3.2. According to this diagram, MSBR fuel carrier salt (72-16-12 mole % LiF-BeF_2-ThF_4) containing ^{97}Zr

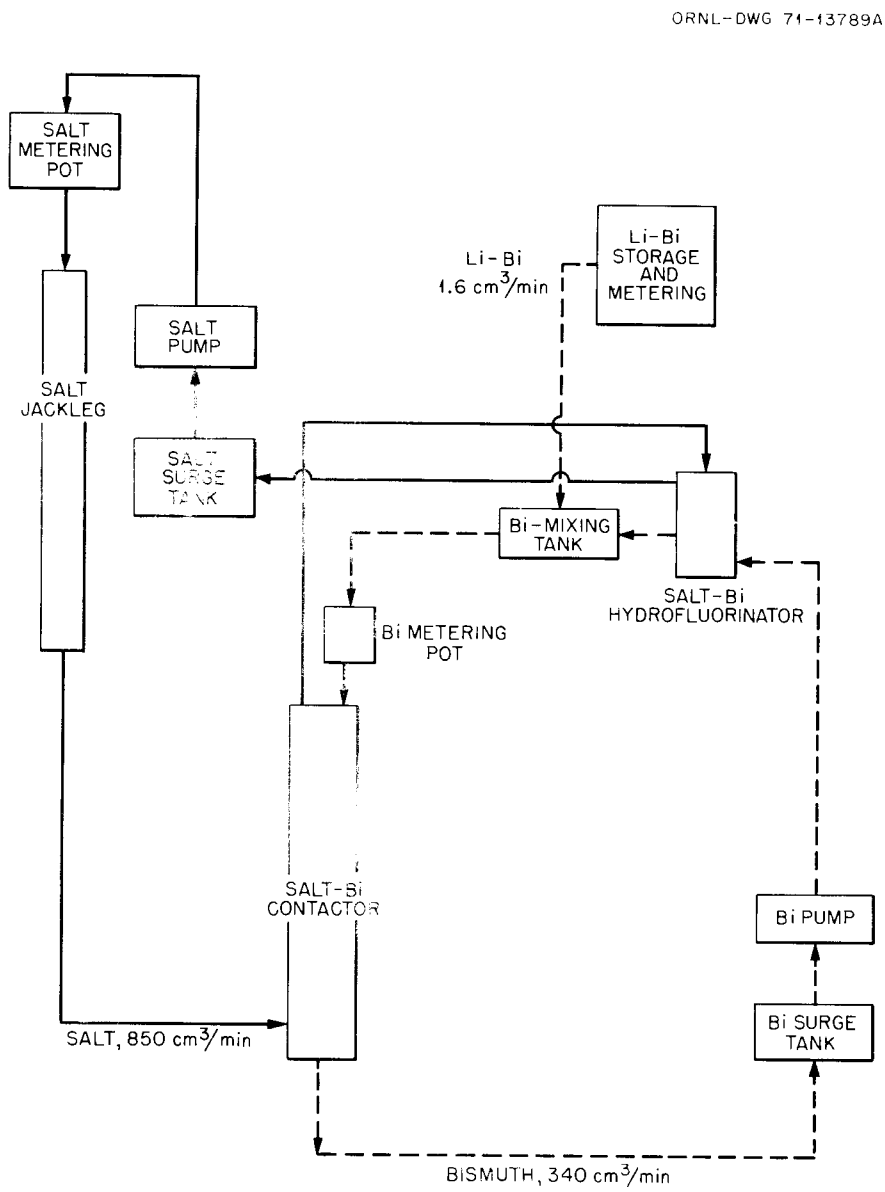

Fig. 3.2. Flow diagram for the reductive extraction process facility.

tracer and 0.003 to 0.01 mole % UF_4 (the uranium concentration expected after fluorination of MSBR fuel salt) would be withdrawn from the salt surge tank and would be fed countercurrent to a bismuth stream containing 0.002 mole fraction of lithium in a 2-in.-ID, 6-ft-long packed column, where part of the uranium and zirconium would be extracted into the bismuth phase. The salt and bismuth streams leaving the column would then be fed to a continuous hydrofluorinator, where the uranium, zirconium, thorium, and lithium in the bismuth would be converted to fluorides that would subsequently transfer to the salt phase. Thus, the salt stream leaving the hydrofluorinator would have the same composition as the salt entering the extraction column. The bismuth stream leaving the hydrofluorinator would be combined with the desired amount of reductant and returned to the extraction column. Provision would be made for sampling the salt and bismuth streams throughout the facility. The REPF would operate continuously, in contrast to the semicontinuous mode of operation for the present reductive extraction test facility (see Sect. 3.7). The facility would have the capability for reaching the flooding capacity of the packed column with salt-bismuth flow-rate ratios ranging from 0.1 to 15; this range of ratios includes salt and bismuth flow rates of 0.5 to 3.25 liters/min and 0.2 to 2.5 liters/min, respectively. Construction of the facility would have allowed operation of all steps of the reductive extraction process with salt flow rates as high as about 25% of those required for processing a 1000-MW(e) MSBR and would have been used to develop multistage salt-bismuth contactors, salt-bismuth hydrofluorinators, and other equipment items required for the removal of protactinium from MSBR fuel salt by reductive extraction. The facility, which would be constructed largely of graphite and molybdenum, would be enclosed in steel for protection from oxidation.

Significant development work had been accomplished in two areas related to the REPF before termination of the MSRP; these consisted of analyses of continuous hydrofluorinators of various designs and of the development of mechanical fittings for joining commercially available molybdenum tubing. Progress in these areas is summarized in the remainder of this section.

Continuous Hydrofluorinator Design

After several designs had been considered for the REPF continuous hydrofluorinator, it was concluded[2] that the most desirable device consisted of a mechanically agitated contactor similar to that being considered for use with the metal transfer process portion of an MSBR processing system. A mathematical analysis, carried out for estimating the performance of mechanically agitated continuous hydrofluorinators, indicated that satisfactory operation could be achieved. Sparging the gas into the salt directly in the hydrofluorinator appeared to be the most desirable method for introducing hydrogen fluoride into the salt. A series of experiments which used argon, water, and mercury was carried out in a 6-in.-diam hydrofluorinator simulation for determining additional operating characteristics. Design calculations indicated that HF could also be introduced into or removed from molten-salt streams via use of open bubble columns of a practical size.

Development of Mechanical Fittings for Molybdenum Tubing

Construction of the REPF would require joints in molybdenum tubing, some of which must be made in the field. While it is feasible to weld molybdenum, the weld-affected region is embrittled and the weld region must be supported in order to ensure that stresses remain acceptably low. Such welds are expensive; thus some near-standard type of tubing fitting would simplify construction of equipment for engineering development studies.

During this report period,[27] we found that it is feasible to flare arc-melted, low-carbon, low-oxygen molybdenum tubing (available commercially) in $\frac{1}{4}$-, $\frac{3}{8}$-, and $\frac{1}{2}$-in. sizes by using a standard flaring tool. The tool is assembled to the tubing, and the tool-and-tubing assembly is heated to 275°C. Subsequently, the flaring cone is run in until the force required begins to increase sharply; then the parts are reheated. Three or four reheats have usually been sufficient for completing a flare. It is anticipated that a tool with a built-in heater could be developed to facilitate the flaring operation.

Because of the very low coefficient for thermal expansion of molybdenum (0.34% total from 25 to 600°C), a flare fitting for use with flared molybdenum tubing either must be all molybdenum or, if the nut is made of some metal other than molybdenum, must be compensated in some manner for the loosening effects of the differential expansion. We were able to demonstrate successful fittings by using each of these approaches.

In attempting the construction of temperature-compensated fittings, we conceived the idea of a three-material nut-ferrule-body assembly in which the lengths and coefficients of expansion for the three parts would be chosen so as to ensure full compensation for the effects of axial and radial differential expansion. A mathematical analysis was carried out to determine the

required dimensional characteristics of the various fitting parts in terms of the coefficients of thermal expansion for the materials used.

Three types of flare fittings were constructed and tested under thermal cycling conditions for ¼-, ⅜-, and ½-in. molybdenum tubing. The first two fitting types consisted of three-material, fully compensated fittings that differed only in the flare angle (37° in one case and 45° in the other). The third fitting type consisted of a 45° angle fitting in which the fitting body, ferrule, and nut were made of molybdenum. Fittings of the above types in all three sizes were subjected to thermal cycling between 300 and 600°C at least six times without significant leakage of helium.[2] It was concluded that flare fittings for use with molybdenum tubing are practical and that this type of tubing connection could be effected routinely.

3.9 STUDIES FOR DETERMINING THE CONCENTRATION OF BISMUTH IN FLUORIDE SALT FROM ENGINEERING EXPERIMENTS

A study was initiated during this report period to determine the concentration of bismuth in fuel salt after contact of the latter with bismuth in the various engineering development experiments. The objective of this program was to determine the probable bismuth content of salt leaving an MSBR processing plant. According to our plans, development of methods for preventing entrainment of bismuth in salt streams and for removing dissolved bismuth species from salt at low concentrations would have been carried out after completion of the present studies. A precise tolerance limit for bismuth in the salt stream to be returned to the reactor has not been determined but is probably below 0.1 ppm.

The study involved sampling metal transfer experiments MTE-2B and MTE-3, salt streams in the semicontinuous reductive extraction facility, and an experiment which did not contain a bismuth phase. The samples were taken in stainless steel, mild steel, quartz, copper, graphite, and molybdenum samplers.[2,27,28] Contamination of the samples with bismuth, which caused considerable difficulty, resulted from the following three sources:

1. Contact of the sampler with bismuth-contaminated sampler ports. This contamination was most easily removed from the copper and graphite samplers by removing the external surface of the sampler.

2. Contaminated equipment and reagents in the analytical laboratory. It was necessary that blanks be run before samples which had very low bismuth concentrations were analyzed in order to ensure that adequate precautions had been taken.

3. Low-density bismuth-containing material floating on the surface of the salt in the experiments. This problem was resolved by purging the sampler with argon during its immersion into the salt and withdrawing samples from a point well below the salt surface. It was also possible to remove this contamination from the surface of the salt sample with nitric acid before the sample was analyzed.

The largest number of samples were taken from metal transfer experiment MTE-2B, which allows the comparison of average reported values for the concentration of bismuth in salt, as obtained with various types of samplers, from a vessel containing salt and bismuth phases (see Table 3.2). The sample port for the vessel was contaminated with bismuth.

Table 3.2. Average concentrations of bismuth in fluoride salt samples taken with various sampler materials from metal transfer experiment MTE-2B

Type of sampler	Average bismuth concentration (ppm)
Stainless steel	58
Mild steel	48
Copper	15
Graphite	14
Quartz	11
Molybdenum	6

The values obtained with the quartz and molybdenum samplers suggest that the bismuth concentration in the salt is as low as indicated with the copper and graphite samplers since both quartz and molybdenum should be essentially inert toward bismuth or bismuth compounds. There was some concern that bismuth might be removed from samples by alloying with sampler material or by absorption on the sampler surface (in the case of copper or graphite samplers). It is believed that all bismuth contamination was eliminated from the last samples taken in graphite samplers. The reported values indicate that the bismuth concentration in salt that has contacted bismuth is not greater than 1 ppm after a short settling period.

3.10 DEVELOPMENT OF THE METAL TRANSFER PROCESS FOR REMOVING RARE EARTHS

The reference processing flowsheet (Fig. 3.1) uses the metal transfer process for removing rare earths from molten-salt breeder reactor fuel salt. Four engineering-

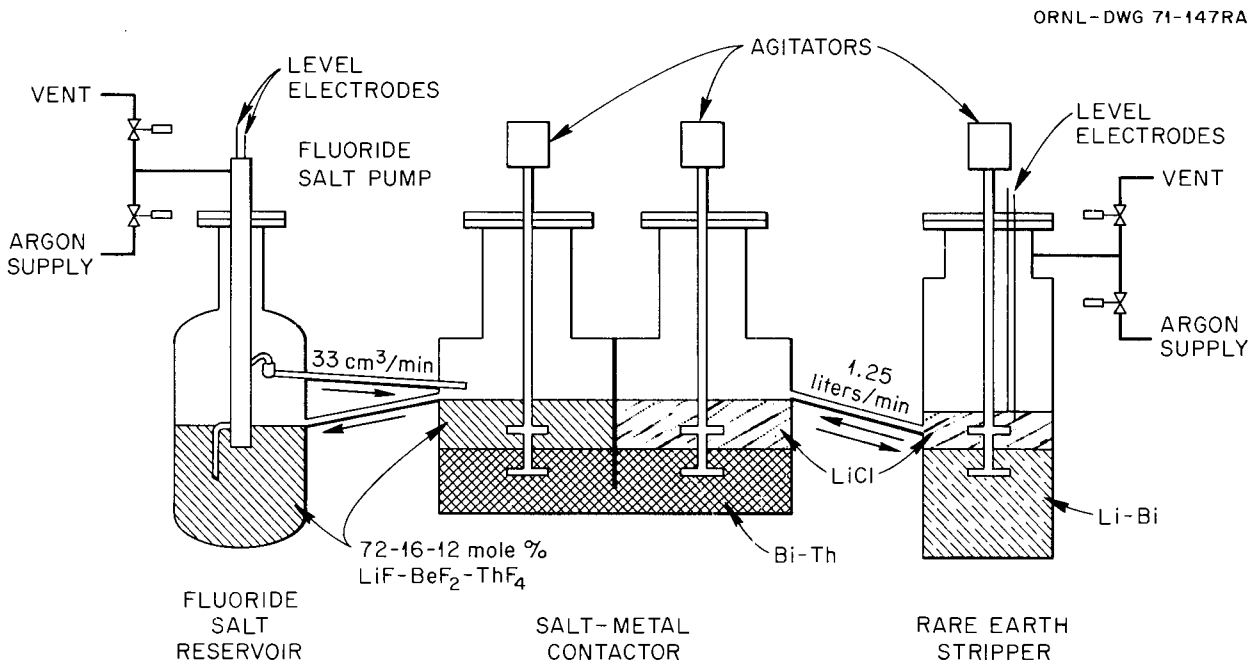

Fig. 3.3. Flow diagram for metal transfer experiment MTE-3.

scale experiments (MTE-1, -2, -2B, and -3) have been performed to study the various steps of the process and to measure the rates at which rare earths transfer between salt and bismuth phases. In experiments MTE-1[31] and MTE-2[32–34] the basic steps of the process were demonstrated using lanthanum and neodymium as typical rare earths. In experiment MTE-2B[35,36] the rate of transfer of the material Li_3Bi between Li-Bi solutions having different lithium concentrations via circulation of molten LiCl was studied.

Metal transfer experiment MTE-3, shown schematically in Fig. 3.3, consisted of a larger experiment having salt flow rates (LiCl, 1.25 liters/min; fuel carrier salt, 33 ml/min) that were about 1% of those required for removing rare earths from a 1000-MW(e) MSBR.[37] The MTE-3 experiment was operated at a temperature of about 650°C. The phases present in the experiment consisted of 72-16-12 mole % $LiF-BeF_2-ThF_4$ fuel carrier salt, 0.13 at. % Th-Bi solution, LiCl, and 5 at. % Li-Bi solution. Mechanical agitators having $2\frac{7}{8}$-in.-diam blades in both the salt and metal phases were used to promote mass transfer without dispersing the phases.[38] The main purposes of the experiment were to measure mass transfer coefficients for the rare earths at the various salt-metal interfaces in the system and to determine whether a literature correlation[39] (based on studies with aqueous-organic systems by Lewis) which relates mass transfer coefficients to the agitator speed and other physical properties of the system is applicable to molten salt–bismuth systems. Thirteen runs were made using agitator speeds ranging from 100 to 400 rpm.

Mass transfer coefficients were measured for radium, europium, lanthanum, and neodymium at the three

31. L. E. McNeese, *Engineering Development Studies for Molten-Salt Breeder Reactor Processing No. 7*, ORNL-TM-3257 (February 1972), pp. 29–46.

32. L. E. McNeese, *Engineering Development Studies for Molten-Salt Breeder Reactor Processing No. 8*, ORNL-TM-3258 (May 1972), pp. 58–63.

33. L. E. McNeese, *Engineering Development Studies for Molten-Salt Breeder Reactor Processing No. 9*, ORNL-TM-3259 (in press), pp. 167–95.

34. L. E. McNeese, *Engineering Development Studies for Molten-Salt Breeder Reactor Processing No. 10*, ORNL-TM-3352 (in preparation).

35. *MSR Program Semiannu. Progr. Rep. Feb. 29, 1972*, ORNL-4782, pp. 216–21.

36. *Chem. Technol. Div. Annu. Progr. Rep. Mar. 31, 1972*, ORNL-4794, pp. 7–8.

37. L. E. McNeese, *Engineering Development Studies for Molten-Salt Breeder Reactor Processing No. 9*, ORNL-TM-3259 (in press), pp. 196–204.

38. L. E. McNeese, *Engineering Development Studies for Molten-Salt Breeder Reactor Processing No. 12*, ORNL-TM-3775 (in preparation).

39. J. B. Lewis, *Chem. Eng. Sci.* **3**, 248–59 (1954).

Table 3.3. Overall mass transfer coefficients[a] measured during metal transfer experiment MTE-3

Material	Agitator speed (rpm)	$K1$ (cm/sec)[b]		$K2$ (cm/sec)[b]		$K3$ (cm/sec)[b]	
		Measured value	% of predicted value	Measured value	% of predicted value	Measured value	% of predicted value
Radium[c]	100	0.000052	100	0.61×10^{-5}	100	0.0032	100
	150	0.000083	100	1.0×10^{-5}	100	0.0062	100
	200	0.00016	100	1.9×10^{-5}	100	0.01	100
Europium	100	0.0001	30	0.15×10^{-5}	10	0.0011	10
	200	0.0003	30	0.48×10^{-5}	10	0.0033	10
Lanthanum	100	0.00006	15	0.39×10^{-4}	0.5	0.0062	7
	150	0.00014	15	1.1×10^{-4}	0.5	0.012	7
	200	0.0002	15	1.3×10^{-4}	0.5	0.02	7
	200[d]	0.0002	15	2.0×10^{-3}	10	0.02	7
	300[d]	0.00026	15	3.2×10^{-3}	10	0.02	4
	300	0.00026	15	3.2×10^{-3}	10	0.02	4
Neodymium	200	0.0002	15	6.5×10^{-3}	10	0.02	7
	300	0.00032	15	1.1×10^{-2}	10	0.02	4

[a]The mass transfer coefficients are based on the rare-earth concentration in the salt phase.
[b]$K1$ at fluoride salt–Bi-Th interface; $K2$ at LiCl–Bi-Th interface; $K3$ at LiCl–Li-Bi interface.
[c]Extrapolated values for the distribution coefficient of radium were used in calculating the mass transfer coefficients.
[d]With sparges in operation in the LiCl compartment of the contactor and the Li-Bi vessel.

salt-metal interfaces in the system.[28,40] A comparison of the experimentally obtained results with values predicted by the Lewis correlation is shown in Table 3.3. With the exception of radium, which was studied during the first four runs only, the experimentally determined values are substantially lower (from 0.5 to 30% of the predicted values). However, the results show the same general dependence on agitator speed as predicted.[28] The lower mass transfer rates are thought to be due to the presence of films (composed of solids) at the interfaces (particularly the LiCl–Bi-Th interface) formed by entry of impurities such as oxides into the system. At 200 rpm, the mass transfer coefficient for lanthanum at the LiCl–Bi-Th interface was increased considerably (from 0.5 to 10% of the predicted value) by the addition of a gas-lift sparge at that interface; however, at a higher agitator speed (300 rpm), the mass transfer coefficient for lanthanum was not decreased significantly when the sparge was stopped. This may indicate that the film present at the interface could be broken up by either the sparge or the turbulence caused by the higher agitator speed. In the final run, made at an agitator speed of 400 rpm, entrainment of salt between the two compartments of the contactor occurred and mass transfer coefficient data were not obtained.

Because of budget limitations associated with the termination of the MSRP, an examination of the MTE-3 equipment was not carried out following completion of the experimental work.

3.11 CONTACTOR STUDIES OF A SIMULATED MOLTEN-SALT–LIQUID BISMUTH SYSTEM

Mechanically agitated salt-metal contactors of the nondispersive type are being considered as alternatives to packed columns for MSBR processing systems. Such contactors are of particular interest for use in the metal transfer process since designs can be envisioned in which the bismuth in the contactor would be a near-isothermal, internally circulated captive phase. In addition, it is believed that contactors of this design may be more easily fabricated than packed columns. Another potential advantage is that adequate mass transfer rates may be obtained without dispersing the salt or metal phases. This mode of operation should eliminate the problem of entrainment of bismuth in salt streams and is highly important in the case of the

40. L. E. McNeese, *Engineering Development Studies for Molten-Salt Breeder Reactor Processing No. 14*, ORNL-TM-4018 (in preparation).

fluoride salt stream since an MSBR would be constructed of a nickel-base alloy that is subject to attack by metallic bismuth.

Since the important physical properties of molten salt–bismuth systems (viscosities, densities, and density difference) are quite similar to those for the mercury-water system, studies made with simulated contactors using mercury and water will allow examination of the hydrodynamic and mass transfer characteristics of this type of contactor under highly desirable conditions for experimentation. We have previously reported results of hydrodynamic studies,[35] and have reported preliminary results on the measurement of mass transfer coefficients for the extraction of silver from dilute aqueous solutions of $AgNO_3$ into mercury.[41] During this report period, our work was directed toward finding materials that distribute between aqueous and mercury phases in a manner suitable for quantitative study of factors affecting mass transfer rates in mechanically agitated contactors. After several candidate materials had been examined, the extraction of lead from an aqueous phase into mercury containing zinc at low concentrations, according to the reaction

$$Pb(NO_3)_2\,[H_2O] + Zn[Hg] \rightarrow Pb[Hg] + Zn(NO_3)_2\,[H_2O]\ , \qquad (14)$$

was found to be quite satisfactory. Problems associated with formation of interfacial solids were encountered initially; however, they were circumvented by the addition of sufficient HCl to the aqueous phase to produce an HCl concentration of about 4×10^{-3} *N*. At this acid concentration, the formation of solids at the interface is prevented without attendant precipitation of $PbCl_2$ or formation of significant quantities of $ZnCl_2$.

Four series of transient batch extraction experiments were performed to determine the variation of mass transfer rate with changes in agitator speed and cell geometry. In all cases the cell was circular, had a diameter of 6 in., and contained about 1 liter of each of the phases. The initial concentrations of zinc in the mercury and of $Pb(NO_3)_2$ in the aqueous phase were each 0.1 *M*. Both baffled and nonbaffled cells were used. Agitator diameters of 3 and 5 in. were employed. The agitator blades were straight in three series of experiments; in the fourth they were canted at a 45° angle. Samples of the aqueous phase were obtained at intervals during each run and were analyzed for both zinc and lead by the atomic absorption technique. The overall and individual mass transfer coefficients for the transfer of lead and zinc were then determined.

The results of these studies are presented in Fig. 3.4. Also included in this figure are the range of literature values for aqueous-organic systems and a correlation derived by Lewis[39] using data on the rate of mass transfer between various aqueous and organic liquids. The correlation, an empirical equation, is represented by the following expression:

$$\frac{60\,k_1}{\nu_1} = 6.76 \times 10^{-6} \left(\mathrm{Re}_1 + \mathrm{Re}_2 \frac{\eta_2}{\eta_1}\right)^{1.65} + 1\ , \qquad (15)$$

where the subscripts refer to the two phases and

k = individual mass transfer coefficient in indicated phase, cm/sec,

ν = kinematic viscosity of indicated phase, cm^2/sec,

Re = Reynolds number based on agitator in indicated phase = D^2N/ν,

D = diameter of agitator in indicated phase, cm,

N = agitator speed, rps,

η = viscosity of indicated phase, $g\ cm^{-1}\ sec^{-1}$.

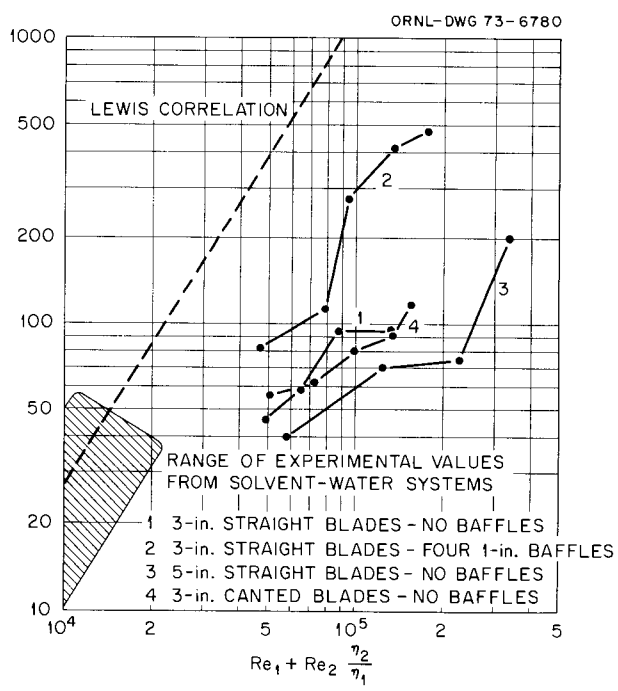

Fig. 3.4. Correlation of mass transfer coefficient data from a 6-in.-diam simulated salt-metal contactor. The mass transfer coefficients were measured during the extraction of lead from a $Pb(NO_3)_2$ solution into mercury containing zinc.

41. *Chem. Technol. Div. Annu. Progr. Rep. Mar. 31, 1972*, ORNL-4794, pp. 8–9.

This relationship indicates that the rate of mass transfer in a mechanically agitated contactor of the nondispersive type is dependent only on eddy transport and is independent of the molecular diffusivity of the transferring material in either of the phases. It is seen that the data obtained in the present study using 3-in.-diam straight blades in a baffled cell are in reasonable agreement with the Lewis correlation, as would be expected since the 6-in.-diam cylindrical cell used in our studies is similar to that used by Lewis.

In order to obtain information on the effects of variations in cell geometry and size on the mass transfer coefficient, a series of rectangular contactors was fabricated. These contactors will produce water-mercury interfacial areas having the dimensions 5.25 in. × 7 in., 7.75 in. × 10.5 in., and 12 in. × 12.5 in. Preliminary results from experiments with these contactors[28] indicate that mass transfer coefficient values ranging from 10 to 30% of the values predicted by the Lewis correlation can be expected. The mass transfer coefficient tends to decrease as the phase volumes in the contactor are increased for the case in which the agitators are positioned midway between the upper and lower phase boundaries. Also, the mass transfer coefficient tends to increase less rapidly with increased agitator diameter than would be predicted by the Lewis correlation. The data obtained thus far indicate that mass transfer rates which are adequate for MSBR processing plant requirements can be obtained with nondispersive, mechanically agitated salt-metal contactors.

A series of experiments was carried out in which a thin layer of powdered Al_2O_3 was used to estimate the effect of an interfacial contaminant on the rate of mass transfer between salt and bismuth phases.[28] It was found that eddies formed in the metal phase are quite effective both in providing for the rapid transfer of materials to the interface and in maintaining portions of the interface free of contamination.

3.12 AXIAL DISPERSION AND GAS HOLDUP IN OPEN BUBBLE COLUMNS

A large body of data on axial dispersion and gas holdup in open bubble columns has been amassed. These data cover a wide range of column parameters, fluid properties, and operating conditions.[42] Visual observation of bubble column performance has revealed two limiting flow modes, bubble flow and slug flow, which occur at low and high values for the superficial gas velocity, respectively. Statistical regression of the data to fit observed performance with models of these two flow regimes has been completed.

The axial dispersion data in the slug flow regime are best fitted by an expression[42] containing the term $(1 - \phi_g)^{3.1}$, where ϕ_g denotes gas holdup (in cm^3 of gas per cm^3 of column volume). However, it is possible to obtain a more useful set of relations which represent the dispersion data almost equally well[35] if it is assumed that the axial dispersion coefficient is independent of gas holdup. The resulting expressions are as follows in this case:

for bubble flow,

$$N_{Pe} = 8.30\, N_{Re}^{0.82}\, N_{Ar}^{-0.44}\, n^{-0.094}\ ; \qquad (16)$$

and for slug flow,

$$N_{Pe} = 0.440\, N_{Re}^{0.31}\, N_{Su}^{-0.18}\ ; \qquad (17)$$

where

N_{Pe} = Peclet number = $D_c V_g / E$,
N_{Re} = Reynolds number = $D_c V_g \rho_l / \mu_l$,
N_{Ar} = Archimedes number = $g D_c^3 \rho_l^2 / \mu_l^2$,
N_{Su} = Suratman number = $D_c \rho_l \sigma / \mu_l^2$,
n = number of orifices in gas sparger,
D_c = column diameter, L,
V_g = gas superficial velocity, L/T,
E = axial dispersion coefficient, L^2/T,
ρ_l = liquid density, M/L^3,
μ_l = liquid viscosity, M/LT,
g = acceleration of gravity, L/T^2,
σ = interfacial tension, M/T^2,
M = mass,
L = length,
T = time.

It is important to note that the intersection of these two expressions should define the transition point between the two flow regimes and that the flow transition, so defined, has been found to be useful for predicting hydrodynamic performance of an open bubble column. Both axial dispersion (as described

42. L. E. McNeese, *Engineering Development Studies for Molten-Salt Breeder Reactor Processing No. 9*, ORNL-TM-3259 (in press), pp. 52–148.

above) and gas holdup performance (as described below) change markedly at the transition point. The transition in flow regime is given by a critical Reynolds number, N_{Re}^*, which divides the bubble flow ($N_{Re} < N_{Re}^*$) and the slug flow ($N_{Re} > N_{Re}^*$) regimes. The critical Reynolds number is given by the relation

$$N_{Re}^* = 0.00315\, N_{Ar}^{0.86}\, N_{Su}^{-0.35}\, n^{0.18} . \qquad (18)$$

Although visual observations indicate that the transition is not as clearly defined as is implied by Eq. (18), predictions of hydrodynamic performance based on this transition criterion are excellent.

As in the case of axial dispersion, data on gas holdup in open bubble columns have been reduced by use of two models, one for each limiting flow mode:[28]

for bubble flow,

$$\phi_g = 0.32\, N_B^{0.22} ; \qquad (19)$$

for slug flow,

$$\phi_g = 0.85\, N_{Fr}^{0.36} ; \qquad (20)$$

where

ϕ_g = fractional gas holdup,

N_B = dimensionless group = $\rho_l V_g^4 / g\sigma$,

N_{Fr} = Froude number = V_g^2 / gD_c.

The dimensionless group N_B represents a balance of inertial forces against surface and buoyancy forces and reflects the importance of bubble stability in the bubble flow regime. The Froude number N_{Fr} is a balance of inertial forces against buoyancy forces and is conventionally used to describe the slug flow regime.

With the models represented by Eqs. (16) to (20), it is possible to predict flow regime, axial dispersion coefficient, and gas holdup in open bubble columns from design parameters alone. Thus, only a measurement (or other estimate) of the volumetric mass transfer coefficient is needed to complete the data required for preliminary design or scale-up of open bubble column reactors.

3.13 DEVELOPMENT OF A FROZEN-WALL CONTINUOUS FLUORINATOR

Studies of continuous fluorination in an open bubble column fluorinator which utilizes a frozen wall as a means of protection against corrosion require a fluorine-resistant heat source in the molten salt. Autoresistance heating of the molten salt appears to be the preferred method for providing the required heat source, and work toward demonstrating the successful operation of simulated fluorinators has been continued.

Two series of experiments related to development studies for this heat source were completed, and a third series of experiments was initiated. The first autoresistance heating test[43] was made with a 2.5-in.-diam fluorinator mockup, and a 65-35 mole % $LiF\text{-}BeF_2$ salt mixture was used. The desired mode of operation was not achieved because an electrically insulating frozen salt layer could not be formed. The second autoresistance heating test[43] used the same salt composition in a simpler test vessel to define the conditions necessary for forming such a frozen salt layer. The third autoresistance heating test was made to test a proposed design for an electrode side arm using the salt mixture (72-16-12 mole % $LiF\text{-}BeF_2\text{-}ThF_4$) that would be present in an actual fluorinator. Results from the second and third autoresistance heating tests are summarized in the remainder of this section.

As described previously,[43] the equipment for the second autoresistance heating test consisted of a straight, vertical vessel made from 6-in. sched 40 nickel pipe. Six runs were carried out in which an electrically insulating layer of frozen salt was successfully maintained on the vessel wall in the test section under steady-state conditions. The resulting heat generation rates, which varied from 9.2 to 16.7 kW per cubic foot of molten salt, are close to the rate expected in the primary fluorinator in an MSBR processing plant (12.6 kW/ft^3) and are adequate for operation of a nonradioactive continuous fluorinator that is protected from corrosion by means of a frozen wall. The measured thickness of the frozen salt layer agreed well with the value predicted by heat transfer calculations and can be inferred with reasonable accuracy by measuring the total resistance of the conducting salt path.

It was found that, with the $LiF\text{-}BeF_2$ mixture, an electrically insulating frozen salt layer could be formed reliably if the temperature of the vessel wall was maintained below the salt solidus temperature. Experimentally determined values for the thickness of the frozen salt layer during the second series of autoresistance heating tests are compared with calculated values in Table 3.4. In each of the runs, steady-state conditions were maintained for $1\frac{1}{2}$ to 4 hr before the salt was drained from the test vessel. The calculated values are based on (1) the electrical resistance of the

43. J. R. Hightower, Jr., *MSR Program Semiannu. Progr. Rep. Feb. 29, 1972*, ORNL-4782, pp. 232–33.

Table 3.4. Comparison of calculated and experimentally measured values for the thickness of molten-salt layers produced by autoresistance heating in a simulated fluorinator

Run	Heating current (A)	Heat generation		Calculated film thickness (in.)		Measured film thickness (in.)
		W	kW/ft^3	Based on electrical resistance	Based on heat transfer	
14	44	2250	16.7	1.33	1.35	1.36
15	55	2760	10.3[a]	1.11	1.15	*b*
16	60	2890	9.2[a]	0.97	1.04	*b*
17[c]	60	3150	11.7	1.09	0.98	1.12
18	55	2830	11.5	1.11	1.10	1.19
20	50	2600	13.5	1.30	1.27	1.43[d]
22	55	2600	11.3	1.16	1.16	1.18

[a]Based on an average of calculated film thickness values.

[b]Vessel could not be drained after the experiment; no measurement was made.

[c]Steady state was not reached; the frozen salt melted near the electrode after 1 1/2 hr of heating.

[d]Radiographic measurements are questionable.

molten-salt core and (2) the rate of heat transfer through the frozen salt layer on the wall of the test section. Literature values for the electrical resistivity of the molten salt[44] and the thermal conductivity of the frozen salt[45] were used in the calculations, and the agreement between the calculated and measured thickness values is satisfactory.

Additional studies of autoresistance heating were carried out in a simulated fluorinator that had a 36-in.-long, 6-in.-diam vertical section and a 6-in.-diam side arm containing the high-voltage electrode.[2] MSBR fuel carrier salt (72-16-12 mole % LiF-BeF_2-ThF_4) was used during this series of experiments.

During five runs which were carried out with the equipment before termination of the MSRP, the desired mode of operation could not be obtained because an electrically insulating frozen salt layer had not formed near the electrode in the side arm. However, it is believed that this difficulty could have been resolved in further studies.

3.14 DESIGN OF A PROCESSING MATERIALS TEST STAND AND THE FIRST MOLYBDENUM REDUCTIVE EXTRACTION EQUIPMENT

In January 1970, funds were approved to design and construct a processing materials test stand in which small-scale development equipment constructed of refractory metals could be operated at high temperatures (550 to 650°C) over long periods of time in an inert-gas atmosphere with a molten-salt bismuth system. A simulated reductive extraction column constructed entirely of molybdenum, which would have been used for obtaining engineering performance data with a packed column, was the first system selected for study. The project was a cooperative effort by the Chemical Technology and the Metals and Ceramics Divisions. The Chemical Technology Division was responsible for design of the overall system, preparation of all design drawings (including those necessary to fabricate the molybdenum equipment), and installation and operation of the system. The Metals and Ceramics Division had the responsibility for developing the required molybdenum fabrication techniques and for producing the assembled molybdenum components. The molybdenum fabrication development work was found to be more extensive than was originally anticipated, and the completion schedule was extended from October 1972 to July 1973. The following paragraphs summarize the activities of the Chemical Technology Division during this report period and the status of this project at the termination of the MSRP in January 1973.

The design for the transportable field assembly jig[46] was modified to improve torsional rigidity, and the unit was fabricated and tested to measure torsional strength. The deflections were found to be in close agreement with calculated values. Since the assembled molybdenum system would be extremely fragile at room temperature, detailed procedures and checklists were

44. G. D. Robbins, "Electrical Conductivity," p. 14 in *Physical Properties of Molten-Salt Reactor Fuel, Coolant, and Flush Salts*, ed. by S. Cantor, ORNL-TM-2316 (August 1968).

45. J. W. Cooke, *MSR Program Semiannu. Progr. Rep. Aug. 31, 1971*, ORNL-4728, p. 41.

46. *Chem. Technol. Div. Annu. Progr. Rep. Mar. 31, 1972*, ORNL-4794, pp. 11–12.

prepared to cover its movement from the assembly area on the second floor of Building 4508 to the operating area on the third floor of Building 4505. The length of the assembly jig, about 18½ ft, negated the use of normal routes for traffic flow, including elevators. A trial run was made in which a wood-and-steel mockup of the molybdenum components[46] was installed on the assembly jig, along with test weld specimens of molybdenum tubing. These specimens were supported only at the ends to the loop support pipe in several strategic locations so that their vulnerability during transport could be assessed. Strain gages for measuring both bending and torsion and two accelerometers for measuring horizontal and vertical acceleration were installed on the frame. The jig was maneuvered from the assembly area through doorways and along aisleways to a second-floor equipment access opening on the outside of the building. The jig was mounted on rubber-tired casters that were fastened to the frame by special heavy rubber shock pads which reduced shock loads over door sills and building expansion plates to negligible values. A crane equipped with a hydraulic boom for reducing shock loads was used to lift and lower the jig onto a truck at ground level in order to minimize transmission of shock loads to the jig. Special rubber shock pads were used under the casters during truck movement of the jig and assembly from Building 4508 to Building 4505. The Building 4505 monorail crane was used to lift the jig (guided by hand-held guy ropes) from the truck and to move the jig into position on the third-floor cell top area. The transfer was made successfully without damage to the mockup or test specimens. Most of the recorded shock loads were less than ½ *g*. One shock load of about 2 *g* was registered when the jig was lowered on and inadvertently mismatched with the trunnion supports on the cell top. A minor adjustment of the parts and procedures corrected this problem.

Design work completed during this report period included detailed revised and redrawn piping drawings for the following: (1) the molybdenum system; structural supporting components, brackets, and bracing for the molybdenum piping, tee connections, and freeze valve; a freeze valve cooling system; the containment vessel; heating and thermocouple details; instrument and electrical control panels; and cell modification work, including a new cell hatch cover, work platforms, and the containment vessel support.

Fabrication of all system components (excluding those made of molybdenum) was completed with the exception of the freeze valve cooling system. The cell modification work was completed, and the heaters and thermal insulation were placed on the containment vessel which was installed in the cell. The instrument and electrical control panels were fabricated and installed. Electrical service connections from the distribution centers to the control panels and from the panels to the cell were completed. Instrument wiring and piping from the panels to the cell were not started.

All molybdenum components were assembled in place on the assembly jig, and final adjustments for piping clearances and support brackets were made. The components were then removed, and final assembly (by welding and brazing) of the components was started.

The molybdenum fabrication work completed by the Metals and Ceramics Division included final assembly of the salt and bismuth head pots, assembly and welding of the top disengaging section of the column (brazing was not completed) and nozzle attachments on both halves of the lower disengaging section (girth weld and brazing were not started). A welding and brazing fixture was designed for holding three major molybdenum subassemblies in proper alignment for glove-box welding and brazing operations. Final joining of the three subassemblies was to be made by field welding and brazing techniques with the equipment installed on the assembly jig. Procedures for making all of the welded and brazed joints were developed and successfully demonstrated using test specimens.

Although the fabrication of molybdenum equipment requires more time and is more difficult than fabrication with common materials of construction, there is little doubt that complex systems could be built using refractory metals.

An undated quality assurance program plan for the facility was prepared.

3.15 DEVELOPMENT OF A CORROSION-RESISTANT SALT-BISMUTH INTERFACE DETECTOR

An eddy-current type of detector that is resistant to corrosion by molten salt or bismuth is being developed to allow detection and control of the bismuth-salt interface in salt-metal extraction columns or mechanically agitated salt-metal contactors. The probe consists of a ceramic form on which bifilar primary and secondary coils are wound. Contact of the coils with molten salt or bismuth is prevented by enclosing the coils in a molybdenum tube. In operation, a high-frequency alternating current is passed through the primary coil, which induces a current in the secondary coil. The induced current is dependent on the conductivities of the materials located adjacent to the primary and secondary coils; since the conductivities of

salt and bismuth are quite different, the induced current reflects the presence or absence of bismuth. Two approaches for obtaining an output from the detector are being pursued. The first is based on measuring changes in the magnitude of the induced current; the second is based on measuring the phase shift that occurs between the voltage imposed on the primary coil and that which is induced in the secondary coil.

The completed probe was installed in a three-chambered test vessel made of carbon steel; both the probe design and the test vessel design were described previously.[47] The upper chamber is a reservoir for molten bismuth; the middle chamber contains the sheathed probe; and the lower chamber, which simulates the interior of the high-temperature containment vessel for the molybdenum reductive-extraction equipment (see Sect. 3.14), contains 13 ft of high-temperature electrical cable in an inert atmosphere. Bismuth can be transferred between the upper and middle chambers to vary the level around the probe; this level can be measured with a bubbler–mercury manometer system and compared with probe readings.

Initial results from phase shift measurements were reported previously.[48] A series of level determinations was made at two temperatures (550 and 700°C) by the amplitude measurement technique to calibrate the temperature compensation circuit. The results (see Fig. 3.5) show that, at each temperature, the probe readings were linear and reproducible for bismuth levels between 4 and 12 in. However, both the manometer and the probe gave erratic readings at bismuth levels below 4 in.; this behavior resulted from the accumulation of iron-bismuth corrosion products around the lower section of the probe.

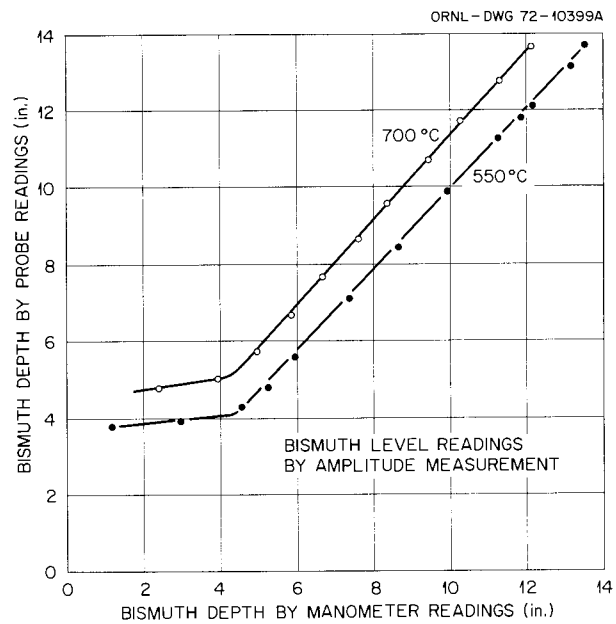

Fig. 3.5. Variation of bismuth depth as indicated by level probe vs bismuth depth as determined from manometer readings.

The tests using the phase shift technique were repeated after the probe had been in continuous operation for about eight months. The measured results were in good agreement with the earlier values, thus indicating that the present detector represents a rugged, practical approach to the measurement of salt-bismuth interface location or bismuth level.

47. H. O. Weeren, *MSR Program Semiannu. Progr. Rep. Aug. 31, 1971*, ORNL-4728, pp. 222–25.

48. H. O. Weeren, *MSR Program Semiannu. Progr. Rep. Feb. 29, 1972*, ORNL-4782, pp. 183–84.

4. Waste Treatment and Disposal

4.1 RADIOACTIVE WASTE REPOSITORY

The participation of the Chemical Technology Division in the Radioactive Waste Repository Project has been expanded to include responsibility for geologic studies in addition to involvement with the operational safety and conceptual design activities. The overall objective of the Project is to establish a pilot storage facility in bedded salt by the early 1980s. During the current report period, emphasis has been placed on geologic investigations aimed at locating an acceptable site. The status of these investigations and results of an experimental program designed to measure transport rates of radionuclides through crushed salt are presented below.

Geologic Investigations

The first part of a reevaluation of the problems associated with the identification of a suitable site for permanent waste disposal operations in natural salt deposits was a broadly based series of investigations of the characteristics of several alternative geologic formations and areas. These geological alternative studies included: (1) an overview of the tectonic and hydrologic relationships throughout the entire Permian basin of Kansas, Oklahoma, western Texas, and eastern Colorado and New Mexico; (2) an examination of the Salado and Castile salt formations of the Delaware basin portion of the Permian basin in southeastern New Mexico; (3) an evaluation of the salt structures in the Paradox basin of southwestern Colorado and southeastern Utah; (4) a review of the limited information available on the Supai salt formation and Luke salt structure, both in Arizona; (5) a reassessment and updating of the information available on the salt domes of the Gulf Coast province; (6) a compilation of geologic and hydrologic data on the Williston basin of Montana, North Dakota, and South Dakota, and the Salina basin in Michigan, Ohio, Pennsylvania, and New York; (7) a general survey of the potential of argillaceous formations, especially claystones and selected shales; and (8) an examination of a few existing mines in dense limestone formations which are known to be totally isolated from circulating groundwater.

From these studies, which were carried out in collaboration with the U.S. Geological Survey and several consultants, it was concluded that the southeastern New Mexico area is by far the most promising. The principal factors that led to this conclusion were the large amount of geologic data available because of the potash mining industry in the region; the presence of extensive and thick beds of high-quality salt located at appropriate depths; the ideal surface conditions of low rainfall, very limited availability of groundwater, and low population density; and the fact that most of the area is currently in federal ownership.

A more detailed evaluation of a smaller (144-square-mile) area was then undertaken in order to identify the most attractive actual site area. These investigations included: (1) surface geologic mapping; (2) development of stratigraphic and structural maps and sections based on existing information; (3) compilation of available hydrologic data; (4) examination of the lithology and mineralogy of the area, especially in those zones having potential for waste disposal operations; (5) evaluation of the mineral resources of the area (i.e., potash, oil, and gas); and (6) assessment of the regional and local seismicity and tectonic stability.

Based on the results of these studies, a tentative Bedded Salt Pilot Plant site at sections 10 and 11, Township 22 East, Range 31 South, Eddy County, New Mexico, was selected for further investigation. The combined thickness of the Salado and Castile salt formations at this site is 3200 ft, and an apparently suitable disposal stratum is available at a depth of about 2100 ft. The site is located approximately 30 miles due east of the community of Carlsbad (Carlsbad Caverns National Park is more than 45 miles southwest of the site). The site and its immediate surroundings have not been extensively explored for hydrocarbons, and the density of existing holes is quite low; the nearest

existing hole is approximately two miles distant. Similarly, the nearest potash mining operation is about five miles distant. It is also significant that this site is located at a groundwater divide. Consequently, available groundwater is expected to be insignificant.

Plans are now being made to begin exploratory drilling adjacent to the site during the summer of 1973. The first hole will be core-drilled from the surface to a depth of about 3000 ft and will be extensively tested hydrologically. These tests and the subsequent analysis of the core will permit us to determine whether the geologic and hydrologic characteristics at the site are suitable. In the meantime, various studies related to the long-term integrity of the site are continuing. These studies include evaluation of the regional dissolutional history, examination of the few apparently diapiric structures in the area and evaluation of the potential for large mass-flow phenomena at the site, and the continuation of the seismicity and tectonic stability investigation with special emphasis on the regional source mechanisms.

It is anticipated that all of these studies, including the drilling of three additional exploratory holes at the site and associated testing, will be completed by the fall of 1974. An overall evaluation and confirmation of the suitability of the site will then be carried out, taking into consideration the results of all of the geologic investigations that will have been performed by that time.

Isotope Transport through Crushed Salt

A knowledge of the extent to which crushed salt backfill, before and after consolidation, retards the transport of radioactivity is needed to evaluate the efficiency of the backfill as a barrier to the dispersal of radioactivity in a salt-mine repository. The degree of isotope migration will also affect the contingency concept to be developed for retrieval of the wastes.

A series of experiments designed to represent as closely as possible the actual conditions to be encountered by high-level waste solids during their exposure to crushed salt backfill was carried out. These so-called "integrated" experiments were initiated since mass transfer in porous solids may take place along many paths: inside the crystal lattice, along the crystal grain boundaries, through pore volumes or intraparticle voids, along pore surfaces, and through the interparticle voids. Chemical reactions or vaporization-condensation, if occurring, may also affect the transport; and the species that is moving may be in either the solid, liquid, or gaseous state. When transport is known to be effected by several mechanisms, use is made of an "effective diffusivity," that is, a coefficient made up of additive contributions from the mechanisms outlined above, in the mass transport equations. These integrated experiments are designed to measure this effective diffusivity for the waste-salt system under realistic conditions, without differentiation among modes of transport.

In the experiments, a thin layer of simulated calcined waste containing either ^{137}Cs or ^{106}Ru was placed between two layers of crushed salt in a 4-in.-diam by 41-in.-long Inconel container (Fig. 4.1). Each assembly or column was placed in a three-zone clamshell furnace used to simulate temperatures encountered under repository conditions. Temperatures of the experiments were varied from about 25 to 400°C. A gamma-activity profile of each column was obtained with a scintillation counter. The detector crystal was oriented in a plane perpendicular to the column, and scans were made vertically along the column. Gamma activities determined at 20 positions equally spaced at distances within ±1 cm of the waste were used to determine a gamma-activity profile. To relate this activity profile to a concentration profile of the radioisotope, the scan was repeated for each of six collimator widths: $1/32$, $1/16$, $1/8$, $3/16$, $1/4$, and $5/16$ in. Each of the profiles was fitted to an equation of the Gaussian form to determine the standard deviation, σ, and the time, t, in the relationship $D_e = \sigma_0{}^2/2t$. Use of this relationship is possible since a plane source diffuses to give Gaussian concentration profiles.[1] By extrapolation to zero solid angle for the gamma detector to minimize the effects of scattered radiation, a maximum upper bound can be placed on the effective diffusivity. Thus, maximum upper bounds of 2.2×10^{-12} cm^2/sec and 2.8×10^{-8} cm^2/sec were placed on the D_e's for ^{137}Cs and ^{106}Ru respectively.

The average depth, $\bar{d}$, that a diffusing substance will have penetrated into a given medium during time t may be estimated by the equation $\bar{d} = (2D_e t)^{1/2}$. Hence, the average penetration of ^{137}Cs and ^{106}Ru from waste in crushed salt after one year would be about 0.01 cm and 1.3 cm, respectively.

1. W. Jost, *Diffusion in Solids, Liquids, Gases*, 3rd printing with Addendum, p. 17, Academic, New York, 1960.

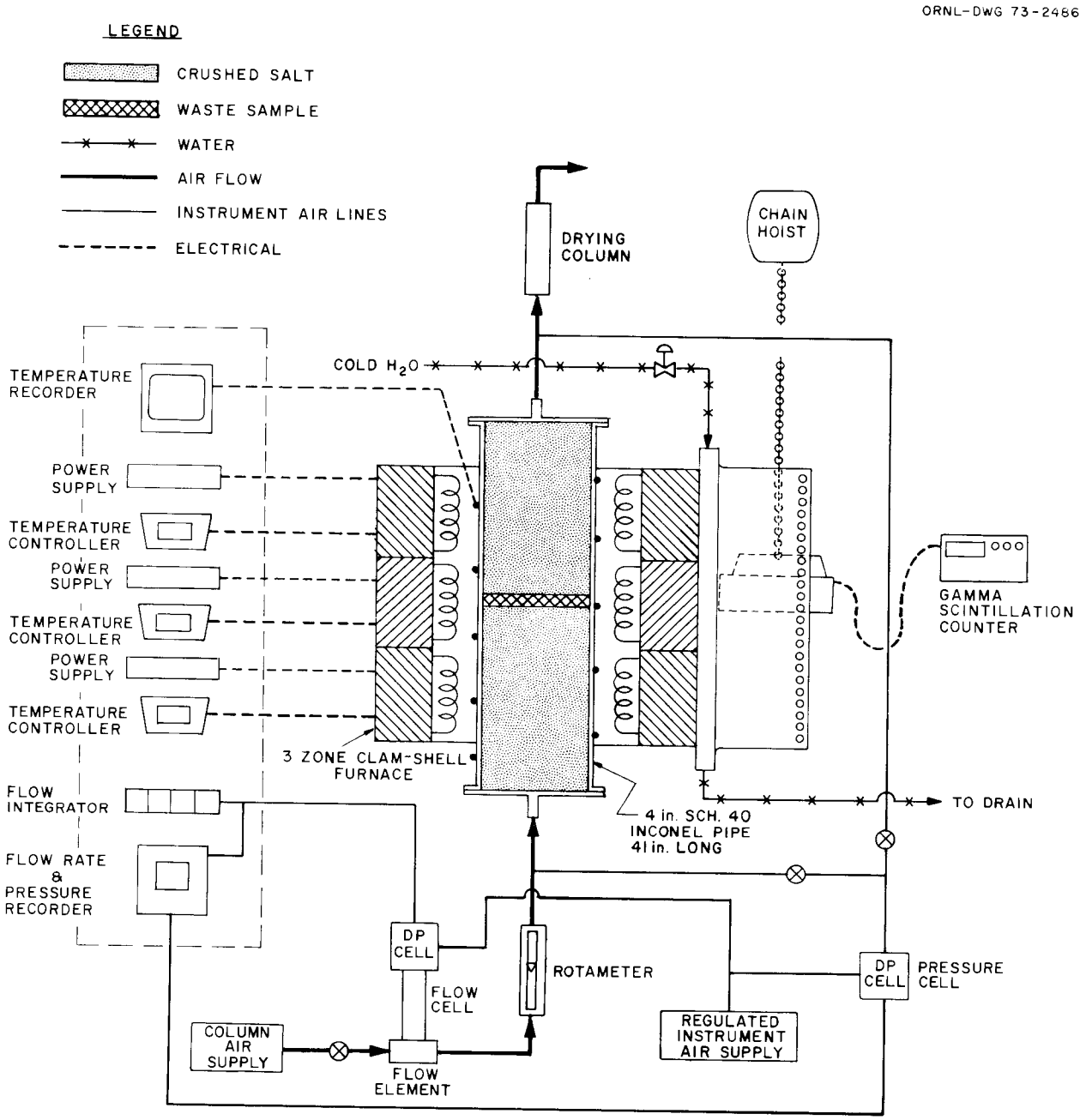

Fig. 4.1. Schematic of apparatus for studying movement of fission products in crushed salt.

4.2 ENGINEERING, ECONOMIC, AND SAFETY CONSIDERATIONS

During the past year, a study was made using the ORNL computer code ORIGEN to assess the possible reduction in hazard of high-level wastes through neutron-induced transmutation of the long-lived radioactive species.[2] Also, a preliminary study was made of design parameters of concrete vaults for long-term storage of high-level solidified wastes.[3]

It is not practical to burn fission product wastes in power reactors because the neutron fluxes are too low. Developing special burner reactors with the required neutron flux, of the order of 10^{17} neutrons cm^{-2} sec^{-1}, or burning in the blankets of thermonuclear reactors is beyond the limits of current technology. When plutonium and uranium extraction efficiencies exceed 99%, a significant reduction in the long-term hazard potential of the waste can be obtained by removal of neptunium, americium, and curium (the other actinides being very small contributors). Consequently, it seems reasonable to concentrate on developing economical chemical processes to extract these three actinides for separate storage or for recycling through the reactors that produced them. The results of such recycling calculations show that the long-term hazard potential of the waste from light-water reactors may be reduced by factors up to 200 if no more than 0.1% of the actinides are discarded to the waste in each pass through the reprocessing plant. Larger reductions of the hazard potential of the waste will become practical if methods are developed to produce sharper separations between the actinides and fission products as the spent fuel is processed.

Concrete vaults offer a safe, reliable means of storing high-level solidified wastes for many decades until a method for the permanent disposal of these materials can be selected. A design study was made of vaults in which natural draft air was utilized to cool wastes that were packaged in 6- and 12-in.-diam containers and enclosed in cylindrical steel sleeves. The optimal spacing for the containers was found to be the closest one considered practical, a pitch-to-diameter ratio of 1.25. Although a close spacing increases pressure drop, energy costs are trivial if fans are used. For practical purposes, minimum capital costs are a function of can size only and are virtually independent of the heat-generation rate per can. Optimal entering air velocities range from 0.5 to 2 fps, increasing with can size and heat-generation rate. Vaults that are of optimal design and have a total storage volume of about 1.1 million ft^3 would be required to accommodate all the high-level solidified wastes expected to be generated in the United States through the year 2000, provided the wastes are initially stored for 10 years at the fuel reprocessing plants.

4.3 COMBUSTION OF PLUTONIUM-BEARING SOLID WASTES

One of the serious problems facing the nuclear energy community is the disposal of alpha-contaminated waste. Much of this waste is in the form of combustible materials such as paper, cloth, wood, and plastics, and disposal would be greatly simplified if these combustibles were first burned. Pressurized aqueous combustion (PAC) is a promising method for converting burnable contaminated waste to a noncombustible solid residue suitable for shipment and final storage. The process consists of heating the waste material with water in a pressurized system to temperatures between 450 and 575°F in the presence of oxygen. PAC has several advantages over conventional incineration, the most important being a better alpha containment capability and simpler off-gas treatment problems.

Early work on this program was directed toward a study of chemical and engineering problems and an evaluation of economic parameters associated with the PAC process.[4,5] During this report period, emphasis was centered on the design, construction, and installation of an engineering-scale experiment suitable for studying feed-slurry mixing, pumping characteristics, and the operation of a small continuous PAC reactor. Chemical laboratory work was done in support of the design, and corrosion tests were performed to identify acceptable materials of construction. It is planned that this experimental assembly will eventually become the core of a complete plant which can handle 0.1 ton of waste per day on a continuous basis and is capable of demonstrating an efficient off-gas purification scheme, effective containment of alpha activity, and amenability to remote operation and maintenance.

The PAC experiment design is shown schematically in Fig. 4.2. Simulated combustible waste is ground up in

2. H. C. Claiborne, *Neutron-Induced Transmutation of High-Level Radioactive Waste,* ORNL-TM-3964 (December 1972).

3. J. J. Perona and J. O. Blomeke, *A Preliminary Study of the Storage of Solidified High-Level Radioactive Waste in Concrete Vaults,* ORNL-TM-3878 (August 1972).

4. *Chem. Technol. Div. Annu. Progr. Rep. Mar. 31, 1972,* ORNL-4794, pp. 34–35.

5. W. C. Ulrich, *Plutonium Burning Program Status Report,* ORNL-TM-3799 (July 1972).

the waste shredder, mixed with water in the slurry feed tank, and then pumped into the reactor. A sufficient amount of compressed air is also supplied to provide the oxygen needed for combustion. The desired mixing and contacting of reactants are achieved by recirculation of the slurry in an external pipe loop using a 100-gpm canned-motor centrifugal pump.

At the process operating conditions indicated in Fig. 4.2, about 90% combustion of the solid waste material is expected. Therefore, the product will have a concentration of about 0.5% solids by weight; this is also the average concentration of material in the recirculation loop and in the reactor at steady state. A portion of the recirculating stream is diverted through a flow-control device to the liquid-solid separator. From this vessel, the product is drained by means of a level-control system. Steam and other gases from the vapor spaces of the reactor and the liquid-solid separator are conducted to the gas-liquid separator. The steam is condensed and returned to the recirculation system by jet action. The noncondensable gases are released through a pressure-control valve which maintains the desired system operating pressure.

The waste shredder, slurry feed tank, slurry feed pump, canned-motor recirculation pump, and three high-pressure air compressors have been installed; and the PAC reactor vessel, liquid-solid separator, gas-liquid separator, and interconnecting piping designs are complete.

Laboratory work in support of the PAC experiment design and construction was performed in two important related areas: chemical investigations of the PAC process, and corrosion tests of candidate materials of construction. The process produces acid effluents unless a slightly basic pH is maintained by the addition of an alkali or a sufficiently alkaline buffer. Since wastes containing appreciable quantities of plastic materials such as polyvinyl chloride, Tygon, or neoprene result in an aqueous chloride environment within the system, the evaluation of materials of construction for service in a practical application becomes a problem of critical concern. Boron may be needed in the process for criticality control; and since sodium tetraborate ($Na_2B_4O_7$) also acts as an alkaline buffer, its effect both on corrosion and reaction rate was studied.

Results of laboratory autoclave experiments with simulated waste slurries indicated that slightly greater total oxidation was achieved when distilled water was used in the slurries instead of a buffered solution containing 6 g of boron (as sodium tetraborate) per liter. For reaction times of 60 to 68 min at average temperatures of 268 to 280°C and with flow rates of 10 to 12 std liters of air per minute, 88 to 90% combustion, based on chemical oxygen demand analy-

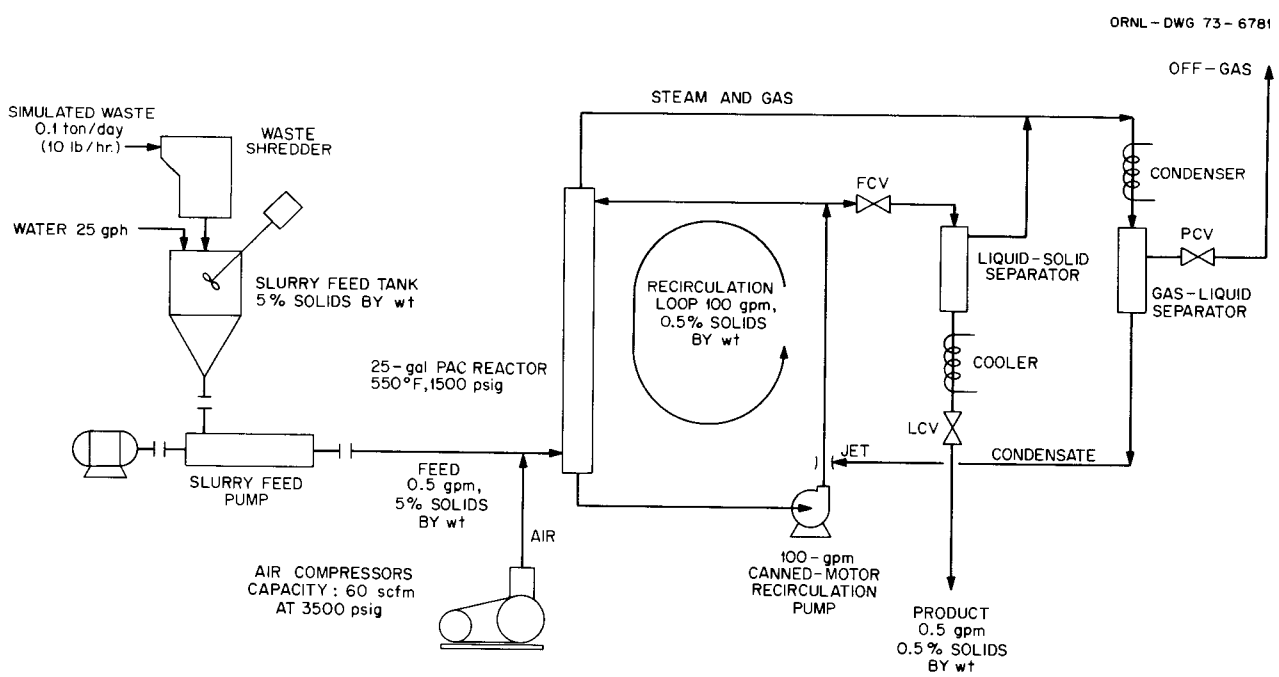

Fig. 4.2. Schematic representation of PAC experiment design.

ses, was obtained for the slurries made with distilled water. Effluents from these experiments were almost colorless and gave pH readings of about 3. Under the same operating conditions, the $Na_2B_4O_7$-buffered slurries showed 85 to 88% combustion, and the effluents were markedly yellow with pH values around 7. A few charred particles were typically present in the effluents from the unbuffered slurries; however, the total dry weight of filterable solids was less than 0.5% of the original weight of solids added, indicating a solid weight reduction factor greater than 200.

Although we found that oxidation of soluble short-chain organic residues is more difficult in the buffered than in the unbuffered slurries, results demonstrate the feasibility of operating at a pH above the highly corrosive acidic levels used in the material screening and corrosion tests described below.

Corrosion tests of a simulated PAC solution on candidate materials of construction were run in both static and flowing systems. In the static tests, metal specimens were exposed to the liquid and vapor phases of three different solutions. In the first test, the solution was 0.1 *M* in $HC_2H_3O_2$, 0.001 *M* in HCl, and contained 3 g of boron per liter (about 36 ppm) as $Na_2B_4O_7$ at 550°F and a total pressure of 2000 psia (an oxygen partial pressure of ~100 psia). The initial pH of the solution was about 5. Conditions for the second test were identical, except that the boron was added as H_3BO_3, which lowered the initial pH of the solution to about 2. Based on results of these two tests, four alloys that exhibited low corrosion rates were selected for further examination: type 430 stainless steel, type 304L stainless steel, type 316ELC stainless steel, and E-Brite 26-1. The third test solution was 0.1 *M* in $HC_2H_3O_2$, 0.28 *M* in H_3BO_3 (about 3000 ppm of boron), and 0.003 *M* in HCl, giving an initial pH of about 2. Of 15 alloys tested, all except 4 (Hastelloy C, Inconel 600, Inconel 625, and 309SNb stainless steel) corroded more rapidly in this more concentrated HCl solution. The results of the static corrosion tests do not eliminate the possibility of operating at low pH values (~2), but they do confirm the desirability of providing pH control.

Operating conditions for the first corrosion test in a flowing system were 288°C, 1200 psig, and a flow rate of 200 to 250 ml/hr. The test solution was 0.10 *M* in $HC_2H_3O_2$, 0.28 *M* in H_3BO_3, 0.003 *M* in HCl, and had a pH of 2.5; the oxygen concentration was calculated to be 590 ppm. Excluding titanium, which was inert, E-Brite 26-1 was by far the most resistant material tested. The austenitic stainless steels were moderately attacked, but all specimens contained at least one stress corrosion crack. All low-alloy steels corroded excessively. Conditions in the second tests were identical to those in the first except that HCl was not present (the pH was 2.8) and a slightly higher flow rate (295 ml/hr) was used. Corrosion rates were very much lower, in general, than in the previous test, and stress corrosion cracking did not occur. The third test solution was 0.10 *M* in $HC_2H_3O_2$, 0.28 *M* in H_3BO_3, 0.003 *M* in HCl, and contained 600 ppm of oxygen. The pH of the solution was adjusted to 6.5 by the addition of NaOH; temperature, pressure, and flow conditions were similar to those in the previous tests. All materials except Croloy 2 and Croloy 5 experienced uniform attack. Stress corrosion cracking of the austenitic stainless steel specimens was not observed even though it was expected since chloride was present.

Based on results of the corrosion studies described above and on other factors such as availability and cost of materials, type 316 stainless steel was selected as the principal material of construction for the PAC experiment. To avoid stress corrosion cracking in the stainless steel equipment, we will use a simulated waste that contains no chloride. However, because chloride cannot be eliminated from the waste in an actual system, a different material of construction will ultimately be required. Based on the results of our corrosion studies, E-Brite 26-1 is currently considered a prime candidate for such use.

5. Transuranium-Element Processing

The Transuranium Processing Plant (TRU) and High Flux Isotope Reactor (HFIR) are operated at ORNL as the primary production facilities for the USAEC Heavy Element Program. During this period, the seventh year of operation of these facilities, efforts at TRU included the recovery of transuranium elements for the research program and the recovery of 240 mg of ^{252}Cf for the commercial sales program sponsored by the Production and Materials Management (PMM) Division.

The phases of the program that are under the direction of the Chemical Technology Division, including the operation of TRU, isolation and purification of products, development of chemical processes, and some chemical studies of the actinide elements, are reported here. Target fabrication work, which is directed by the Metals and Ceramics Division, is described in detail in reports issued by that Division.

5.1 TRU OPERATIONS

The functions of the Transuranium Processing Plant (TRU) are to recover large quantities of the transuranium elements and distribute them to researchers. Since it began operation in 1966, TRU has been the only source of significant quantities of berkelium, californium, einsteinium, and fermium in the United States.

The purposes of this section are to report the production of transuranium materials and to describe recent changes in the processes and equipment that are being used in TRU. More detailed information is presented in a series of semiannual reports on production, status, and plans.[1,2]

Status and Progress

During the first four years that TRU was in operation, feed materials were primarily obtained from HFIR irradiations, and all recovered transuranium elements (plutonium through fermium) were distributed to researchers. During the past three years, operations at TRU were expanded to include the processing of materials irradiated at the Savannah River Plant (SRP) to recover californium for use in the Californium-I program. This program is sponsored by the PMM Division to evaluate the commercial market for ^{252}Cf. Thus far, 164 SRP reactor slugs, which originally contained americium and curium, and 21 SRP reactor tubes, which originally contained ^{242}Pu, have been processed at TRU. No further processing of SRP slugs or tubes is scheduled. Processing of PMM materials will be limited to the recovery of transuranium elements from rework material and to the return of PPM materials to Savannah River. Part of the curium recovered from the Californium-I campaigns at TRU has been irradiated in the HFIR this year in order to increase the amounts of materials available to researchers.

TRU's primary role as supplier of research materials has continued. As usual, about 100 shipments were made this year to researchers throughout the country.

Production and Processing

During this report period, six processing campaigns were completed: three to process 9 SRP reactor tubes, two to process 22½ TRU-HFIR targets, and one to process 10 SRP Cm-HFIR targets which had been prepared from curium recovered from PMM materials. Key isotopes in the recovered materials are listed in Table 5.1. In addition, two campaigns were made to purify and convert 270 g of Californium-I curium to the oxide form for use in HFIR targets.

About 240 mg of ^{252}Cf for the PMM Division program was recovered from the SRP reactor tubes. The

1. L. J. King, J. E. Bigelow, and E. D. Collins, *Transuranium Processing Plant Semiannual Report of Production, Status, and Plans for Period Ending June 30, 1972,* ORNL-4833 (January 1973).

2. L. J. King, J. E. Bigelow, and E. D. Collins, *Transuranium Processing Plant Semiannual Report of Production, Status, and Plans for Period Ending December 31, 1972,* ORNL-4884 (June 1973).

Table 5.1. Amounts of materials recovered in major campaigns in the Transuranium Processing Plant during the period April 1, 1972, through March 31, 1973

	TRU campaign No.						Total recovered for	
	33	35	37	38	39	40	PR Division	PMM Division
Completion date	4/72	6/72	12/72	1/73	2/73	3/73		
Material processed	3 SRP Pu-Al tubes plus rework	10 TRU-HFIR targets plus rework	3 SRP Pu-Al tubes plus rework	3 SRP Pu-Al tubes plus rework	12 ½ TRU-HFIR targets plus rework	10 SRP Cm-HFIR targets plus rework		
Amounts recovered								
^{242}Pu, g	3.2	None	3.0	2.1	None	None	8.3	
^{243}Am, g[a]	1.3	0.3	2.0	2.4	1.8	0.06	2.5	5.3
^{244}Cm, g[a]	69	28.1	68.5	84.2	36.6	49.3	87.3	248.4
^{249}Bk, mg	13.6	7.9	8.5	9.0	12.8	19.2	71.0	
^{252}Cf, mg	88	66	73	75	83	203	352	236
^{253}Es, μg	None[b]	312	None[b]	None[b]	555	994	1861	
^{257}Fm, pg	None	0.25	None	None	0.5	0.75	1.5	

[a]Americium and curium are not usually separated from each other.
[b]^{254}Es was recovered as a product.

americium and curium were held for reirradiation, while the plutonium, berkelium, and einsteinium were assigned to the research program.

Several isotopes of special interest to researchers were obtained from the Californium-I materials. After decay of ^{253}Es, 2.8 μg of high-purity ^{254}Es was obtained from the nine reactor tubes processed this year plus three of the tubes that had been processed previously. The plutonium recovered from all 21 reactor tubes processed at TRU was purified this year, yielding 36 g of product (24% ^{244}Pu) which was shipped to the Y-12 Plant to be enriched in the calutrons to more than 99% ^{244}Pu. Through an agreement between the PMM and PR divisions, we purified and stored 92 mg of ^{252}Cf from Californium-I materials last year for use as a "cow" from which isotopically pure ^{248}Cm could be "milked." A total of 15 mg of ^{248}Cm was obtained from this source during the current report period. The ^{252}Cf content in the "cow" is being maintained at 90 to 100 mg so that about 10 mg of ^{248}Cm will be made available every six months.

Processes and Equipment

Chemical processing operations were suspended for about three months in order to perform maintenance. Four of the six tubing bundles that connect processing equipment in the cubicles to tanks in the cell pits were replaced because many of the pipes had developed leaks or had plugged during the heavy processing load of the past three years. There was no replacement of major chemical process equipment.

Flowsheets used at TRU remained unchanged this year; however, laboratory studies were made to increase our knowledge of the behavior of impurities in the high-pressure ion exchange process during purification and encapsulation of californium products (see Sect. 5.4).

Fabrication of Targets

Twenty-nine targets were fabricated in order to recycle curium to the HFIR. Four of them were fabricated from curium recovered during the processing of research materials, and 25 were fabricated from curium that was recovered from Californium-I targets. All of the curium for the targets was prepared by the resin-loading–calcination technique.[3]

3. *Chem. Technol. Div. Annu. Progr. Rep. Mar. 31, 1972*, ORNL-4794, p. 39.

5.2 ISOLATION AND PURIFICATION OF TRU PRODUCTS

The final purification of transplutonium elements, the isolation of second-growth isotopes, and the fabrication of actinide shipping packages and neutron sources are accomplished in equipment installed in cell 5 in TRU, the californium facility at TURF, and in supporting shielded-cave facilities. When products reach certain levels of purity, they are moved into these cleaner facilities, which are used only for handling products.

The purified products are obtained from the transcurium fraction (from the LiCl anion exchange process) that is produced routinely in the plant equipment. The purification process, which has been previously described,[4–6] consists of the separation of fermium, einsteinium, californium, and berkelium from each other and from residual actinides by selective elution from cation exchange resin with ammonium α-hydroxyisobutyrate; berkelium is further decontaminated from residual actinides by oxidation to Bk^{4+} by $NaBrO_3$ and subsequent extraction from 8 *M* HNO_3 into di(2-ethylhexyl)phosphoric acid (HDEHP). The products obtained from this processing during the past year are reported in Sect. 5.1.

The increased production rate of transcurium elements resulting from irradiation of SRP Cm-HFIR targets means that larger quantities of these elements are now being processed in a TRU campaign. Approximately 100 mg of ^{252}Cf and 0.5 mg of ^{253}Es were processed in each of the three most recent cation exchange chromatography runs in which ammonium α-hydroxyisobutyrate solutions were used to separate fermium, einsteinium, californium, and berkelium from each other. Process conditions were identical to those used previously, except that the activity levels were greater. There are indications that these amounts of ^{252}Cf and ^{253}Es represent about the maximum that can be processed unless some alterations are made in the process conditions or equipment to limit radiation damage to the resin.

Several special separations were made during this report period. These included the separation of americium and curium from each other by pressurized cation exchange chromatography to produce 2.33 g of ^{244}Cm containing <200 ppm of ^{243}Am and 0.87 g of ^{243}Am containing <3000 ppm of ^{244}Cm. About 250 mg of the ^{244}Cm was further treated by extraction chromatography in which HDEHP on Bio-Glas substrate was used to remove the ^{240}Pu daughter that had grown in from ^{244}Cm decay. Isotopically pure ^{248}Cm was milked from the ^{252}Cf "cow" and purified by means of pressurized ion exchange and extraction chromatography methods described previously.[6] Plutonium (24% ^{244}Pu) recovered from SRP reactor tubes was decontaminated from ruthenium and ^{110m}Ag fission products by anion exchange from nitric acid solutions, then precipitated by the addition of ammonium hydroxide, and finally calcined at approximately 450°C to the oxide.

5.3 SPECIAL PROJECTS

The facilities that are available at TRU are used for a variety of purposes in addition to those associated with the main-line production and distribution of transuranium elements. Special projects include nonroutine productions, special preparations, special irradiations in the HFIR, and fabrication of neutron sources from ^{252}Cf.

Fabrication of Neutron Sources from Californium

Much of the californium recovered at TRU is incorporated into neutron sources, which are subsequently loaned to researchers. Thirteen sources containing from 4 μg to 11 mg of ^{252}Cf were fabricated this year. Most of them were doubly encapsulated in type 304L stainless steel in a standard configuration.[7] One was a standard singly encapsulated source but was later returned for double encapsulation. Two were doubly encapsulated in Zircaloy-2 to minimize the neutron capture in the source container.

Two nonstandard sources were prepared. One was a second version of the special source prepared for the National Bureau of Standards (NBS).[8] While the external hardware remained the same, the californium (3 mg of ^{252}Cf) was confined to an even smaller volume; most was within a disk 2.5 mm in diameter by 1.3 mm

4. *Chem. Technol. Div. Annu. Progr. Rep. May 31, 1967,* ORNL-4145, pp. 136–51.

5. *Chem. Technol. Div. Annu. Progr. Rep. May 31, 1968,* ORNL-4272, pp. 100–101.

6. R. D. Baybarz, J. B. Knauer, and P. B. Orr, *Final Isolation and Purification of the Transplutonium Elements from Twelve Campaigns Conducted at TRU during the Period August 1967–December 1971,* ORNL-4672 (April 1973).

7. W. D. Burch, J. E. Bigelow, and L. J. King, *Transuranium Processing Plant Semiannual Report of Production, Status, and Plans for Period Ending June 30, 1971,* ORNL-4718 (January 1972), p. 13.

8. *Chem. Technol. Div. Annu. Progr. Rep. Mar. 31, 1972,* ORNL-4794, p. 38.

thick. The other was an extremely small source prepared to fit existing equipment. A cermet Cf_2O_3-Pd wire containing 54 μg of ^{252}Cf was obtained from the Savannah River Laboratory. The wire (<1.9 mm in diameter by 4.3 mm long) was encapsulated in a stainless steel capsule 3.2 mm in diameter by 6.4 mm long. Type 405 stainless steel was used to make the source ferromagnetic so that it could be retrieved by use of a magnet in case of loss.

Calibration of ^{252}Cf Sources

The apparatus for fast-neutron detection, which is installed in the source and target decontamination facility,[8] has continued to operate reproducibly and reliably. However, a slight upward revision of 1.54% was made to the ^{252}Cf content of our standard source, NSS-19. This revision is based on the intercomparison of NSS-19 with the special source prepared last year and shipped to NBS (i.e., NS-39). The latter source was calibrated by NBS for their own use, but they were kind enough to share the data with us. However, NSS-19 is now getting rather weak (0.24 mg) and the count rate requires substantial background corrections, particularly when comparisons are being made with larger sources. Therefore, a new calibration standard, which currently contains 3.75 mg of ^{252}Cf, was fabricated. This source, NSS-62, will be carefully intercompared with NSS-19 and will eventually replace the latter as our calibration standard.

Special Rabbit Irradiations

Three HFIR hydraulic rabbits, each containing approximately 5 μg of ^{253}Es, and a fourth one containing approximately 0.05 pg of ^{257}Fm (1×10^8 atoms), were fabricated, irradiated, and disassembled for shipment to the customer. One of the rabbits contained slightly more than 5 μg of ^{253}Es, and after irradiation its ^{254}Fm content was sufficiently high to prevent shipment until the following day. From radiation readings, we deduced the presence of 70 ng of ^{254}Fm, which is roughly equivalent in neutron emission to 10 μg of ^{252}Cf.

Neutron Activation Analysis

The AEC has established a "cooperative californium analytical measurement program" to provide the basis for a more consistent and realistic interpretation of neutron activation analysis systems using ^{252}Cf. ORNL is one of several AEC laboratories that have set up californium neutron sources to analyze a series of standard solid and liquid samples by neutron activation. The results will be correlated and published by the New Brunswick Laboratory.

The ORNL Analytical Chemistry Division is making use of a portion of the ^{252}Cf inventory that is part of the "cow" for production of ^{248}Cm. Three packages containing ^{252}Cf were seal-welded, decontaminated, and then transferred to the HFIR pool, where they were loaded into a polyethylene block 280 mm in diameter and 280 mm high. A central hole in the block permits the introduction of a sample for neutron activation. After irradiation, the sample is transported by hand to the counting facility on the experimental floor of the HFIR building.

Calibration data on the packages are:

Package	^{252}Cf content (mg)	Date calibrated
574	35.4	1-30-73
575	25.3	1-30-73
Cow 3	19.5	1-30-73
Total	80.2	

Measurements made with gold and manganese monitors showed the thermal flux in the central hole to be 1.1×10^9 neutrons cm^{-2} sec^{-1}, and the thermal-to-resonance ratio was 15.4. This ratio is similar to the value found in ^{235}U–H_2O-moderated reactors. Preliminary data for solid samples (0.3 to 0.4 g) showed sensitivities of 11 elements ranging from 0.06 μg for manganese to 150 μg for selenium. These results involved activation times ranging up to 72 hr and counting times up to 2 hr. A substantial portion of the data reduction was performed by an on-line computer.

5.4 DEVELOPMENT OF CHEMICAL PROCESSES

Since process methods used in TRU for recovering transuranium elements are well established and give good recoveries, there is no longer a need for a major process development program. Consequently, we carry out process development work only when improved methods or a better understanding of process conditions in existing processes is needed. Achievements in this area during the past year were as follows: (1) an alternative method for recovering transplutonium elements from recycle solutions was developed, (2) the behavior of impurities during separation of fermium, einsteinium, californium, and berkelium by cation exchange chromatography was investigated, and (3) extraction chromatographic methods for removing small amounts of plutonium from trivalent actinides were studied.

Transplutonium elements in recycle solutions are normally given an initial treatment via the Cleanex process, in which the trivalent actinides are extracted into 1 *M* HDEHP from solutions having low acid concentrations (<0.1 *N* H^+). However, hydrolysis and the buffering action of impurities often cause difficulties in this process. In an attempt to circumvent such difficulties, we have developed an alternative method in which acidities as high as 0.2 *N* can be used. The new method consists of extracting the actinides from a concentrated solution of mixed nitrate and chloride salts into 60% tributyl phosphate in an aliphatic hydrocarbon diluent. In a typical application, one-tenth to five-tenths volume of 12 *M* LiCl is added to one volume of 2 *M* (6 *N*) $Al(NO_3)_3$. If a large quantity of sodium is present, actinide extraction is decreased considerably and the addition of chloride (or total salt concentration) must be limited to prevent precipitation of NaCl. If the ratio of 12 *M* LiCl added to 2 *M* $Al(NO_3)_3$ is greater than approximately 3, $AlCl_3$ will precipitate. Some of the $LiNO_3$ and essentially all of the acid are extracted; however, chloride extraction is minimal. Tests of this process in TRU have been only partially successful. Difficulties have been encountered in determining the feed composition needed to give satisfactory actinide extraction.

Pressurized ion exchange, in which elutions are made with α-hydroxyisobutyrate solutions from cation exchange resin, plays a vital role in the final isolation and purification of the transcurium elements. Not only is this technique used to make the initial separation, but a second cycle is used to purify californium, primarily from residual ^{244}Cm. A series of laboratory runs was made to determine which impurities would follow the californium fraction if, by some unforeseen circumstance, such impurities were present in the feed to the purification column. Gadolinium and neodymium were used as "markers" for californium and americium, respectively. Eight ionic impurities – Fe^{3+}, Al^{3+}, Cr^{3+}, Ni^{2+}, Mg^{2+}, Ca^{2+}, Ba^{2+}, and Pb^{2+} – were tested; of these, only Ca^{2+} was found to elute in the region with Cf^{3+}.

An extraction chromatographic method for removal of the ^{240}Pu daughter from ^{244}Cm has been developed. This method uses a column of Bio-Glas loaded with either Aliquat 336 or HDEHP. These extractants have a very high affinity for Pu(IV) at high acidities (>1 *M*) but practically none for trivalent elements. At both 1 *M* and 3 *M* HNO_3, 99 to 99.5% of the plutonium was removed by either extractant; however, "bleeding" of the Aliquat 336 from the Bio-Glas occurred when the column was reused. A Bio-Glas column loaded with HDEHP was used for final purification of ^{244}Cm (see Sect. 5.2).

5.5 TRANSPLUTONIUM-ELEMENT RESEARCH

A systematic study of actinide-element chemistry and of comparative lanthanide chemistry is being made as significant quantities of new isotopes become available. Such a study materially increases our basic understanding of actinide systems. This part of the USAEC Heavy Element Program includes work on the preparation of solid actinide compounds that are characterized by x-ray and electron diffraction, electron microscopy, thermogravimetry, differential thermal analysis, and metallographic examination.

Lanthanide and Actinide Hydrides

Investigation of the americium-hydrogen system was completed, and the results have been accepted for publication in the *Journal of Inorganic and Nuclear Chemistry*. The abstract follows:

"The Actinide Hydrides: The Americium-Hydrogen System," by J. W. Roddy. *Abstract:* Pressure-temperature-composition data and X-ray measurements were obtained to study the nature of the americium-hydrogen system using the long-lived americium-243 isotope ($t_{1/2}$ = 7950 years). A Sieverts-type apparatus was employed to perform measurements in the temperature range 125°–880°C, in the composition range from Am to AmH_3, and at pressures from 10^{-4} to 700 torr. The existence of three homogeneous phases was established: americium solid solution, the dihydride, and the trihydride. Equilibrium plateau decomposition relationships were determined from Van't Hoff plots in the Am(ss)-AmH_2 two-phase region, yielding

$$\log_{10} p(\text{torr}) = \frac{-9942 \pm 38}{T} + 11.04 \pm 0.04.$$

The heat of formation of AmH_2 is $\Delta H_f = -45.5 \pm 0.2$ kcal/mole; the entropy of reaction is $\Delta S = -37.3 \pm 0.2$ cal/deg per mole.

Comparison of this heat of formation for AmH_2 (–45 kcal/mole) with the literature values for NpH_2 (–28 kcal/mole) and PuH_2 (–37 kcal/mole) shows increasing stability by an increment of approximately –8 kcal/mole for each unit increase in atomic number. This suggests a heat of formation of around –52 kcal/mole for CmH_2, which has not yet been measured.

Investigation of the Actinide Hydroxides by Electron Diffraction and Electron Microscopy

Electron microscopy, electron diffraction, and x-ray analysis studies on the actinide hydroxides were con-

tinued. Experimental work on the hydroxides of americium through californium is complete, and the data will be published in the near future. In addition to obtaining the lattice parameters for these compounds, the studies were also concerned with investigating the effects of self-irradiation on the crystals. In studying the trihydroxides of americium through californium, ^{249}Bk was the only isotope used that decays by beta emission. The life of the berkelium hydroxide was found to be much shorter than would be anticipated, based on the assumption that the beta emission would cause less damage than the alpha particles. An alternative explanation for the loss of crystallinity may be oxidation by small amounts of air. In order to investigate the effects of beta emission on the hydroxide crystals, studies were made with $^{147}Pm(OH)_3$, which is isostructural with the actinide hydroxides. Periodic examination of the $Pm(OH)_3$ crystals confirmed that damage by its beta radiation was far less extensive than that found in the alpha-emitting actinide compounds of longer half-life. Precise lattice parameters for $Pm(OH)_3$ were determined by x-ray and electron diffraction. The hexagonal lattice parameters calculated in the present work were a_0 = 6.399 ± 0.003 Å and c_0 = 3.700 ± 0.002 Å, compared to literature values of a_0 = 6.39 and c_0 = 3.68.

Preparation of Actinide and Lanthanide Metals by Vapor Deposition, and Analysis by Electron Diffraction and Electron Microscopy

The preparation and crystal structures of the lanthanide metals and the actinide metals through berkelium have been reported by a number of investigators. The scarcity of the transcurium elements requires that microtechniques be used for preparing the metallic state of these elements. The transplutonium elements have generally been prepared by reducing the actinide trifluoride with lithium or barium metal at elevated temperatures. However, since the high volatility of californium and einsteinium metals complicates this procedure, a technique in which the volatile metal is distilled from a lanthanum metal–actinide oxide mixture was used to prepare these two actinide metals. The metal products were condensed on electron microscopy grids and then analyzed by electron diffraction. The melting points of the metals were determined by observing the metal deposits while they were being heated in the electron microscope.

Face-centered cubic (fcc) and hexagonal close-packed (hcp) structures were observed for both californium and einsteinium. For californium, the lattice parameter for the fcc structure was 5.743 ± 0.006 Å, and the parameters for the hcp phase were a_0 = 3.988 ± 0.004 Å and c_0 = 6.887 ± 0.008 Å.[9] The lattice dimensions of einsteinium structures were found to be very similar to those for californium and are presently being refined by computer analysis. The metal radii calculated from the parameters of both californium and einsteinium indicate that these metals are divalent, as are europium and ytterbium metals in the lanthanide series. The melting point of californium was determined to be 900 ± 30°C; einsteinium melted at 860 ± 30°C. These values can be compared to the melting points of 825°C for europium and ytterbium and 986°C for berkelium.

Several of the lanthanide metals have also been studied by electron diffraction as stand-ins for the actinides during the development of the microtechniques used. Additional work was done also to investigate the behavior of thin films vs bulk (submilligram) samples. Ytterbium metal was of special interest because of its similarities to californium metal. There has been some question in the literature as to whether the hcp form of ytterbium metal is an impurity-stabilized phase or a low-temperature phase. In our efforts, it has been possible to obtain hcp ytterbium metal phases that are stable at room temperature; however, these phases have been found in the thin-film preparations but not in small pieces. This strongly supports the impurity stabilization hypothesis. Lattice parameters obtained for the hcp structure were a_0 = 3.910 Å and c_0 = 6.400 Å. The metal radius calculated from these parameters is 1.96 Å, which is in good agreement with the radius of 1.92 Å calculated from the literature value for the fcc structure (a_0 = 5.481 Å) of ytterbium.

High-Temperature Phases and Melting Points of Berkelium and Californium Sesquioxides

A phase diagram for the sesquioxides of plutonium through californium has been completed.[10] The monoclinic and hexagonal forms of berkelium sesquioxide and the monoclinic form of californium have been prepared. The cubic forms transformed irreversibly to the monoclinic structures at 1200 ± 50°C for berkelium oxide and 1400 ± 50°C for californium oxide. The

9. R. G. Haire and R. D. Baybarz, "Crystal Structure and Melting Point of Californium Metal," submitted to *J. Inorg. Nucl. Chem.* (1973).

10. R. D. Baybarz, "High Temperature Phases, Crystal Structures, and the Melting Points for Several of the Transplutonium Sesquioxides," accepted for publication in *J. Inorg. Nucl. Chem.* (1973).

monoclinic form of berkelium sesquioxide was converted to the hexagonal structure at 1750°C; californium sesquioxide changed from the monoclinic structure to the hexagonal structure very near its melting point. The experimentally determined melting points of berkelium and californium sesquioxides are 1920 ± 25°C and 1750 ± 25°C, respectively. Melting points of the transcurium sesquioxides are lower than expected from the trend in melting points observed for the lanthanide oxides and for the sesquioxides from plutonium through curium. In addition, the melting point of curium sesquioxide, as prepared from ^{248}Cm, was determined to be 2260 ± 25°C. This is in good agreement with the literature value of 2275°C, which was measured for oxide made from ^{244}Cm.

Collaborative Research with Los Alamos Scientific Laboratory

Several research projects were initiated with personnel at the Los Alamos Scientific Laboratory. One project involved the preparation of californium tetrafluoride and the determination of its crystal lattice parameters.[11] The preparation of this compound confirms the existence of tetravalent californium in solid compounds. The lattice parameters for the monoclinic CfF_4 structure were a_0 = 12.425 ± 0.004 Å, b_0 = 10.468 ± 0.004 Å, c_0 = 8.126 ± 0.003 Å, and β = 126.02 ± 0.02°. These dimensions yield a molecular volume of 71.21 Å^3 for CfF_4. In addition, a revised set of lattice parameters for the actinide tetrafluorides from thorium to berkelium has been obtained with the computational procedure employed for the californium tetrafluoride powder data.[12] These new lattice parameters provide a consistent set of values for the actinide tetrafluoride series.

Further work has been done relative to preparing californium metal in submilligram amounts. The volatile metal, which was obtained by reduction of the actinide oxide with lanthanum metal, was condensed on quartz and beryllium wires and analyzed by x-ray diffraction. The metal structure was found to be hexagonal close packed; the lattice parameters are presently being refined. The larger amounts of material will help decrease potential problems from trace impurities.

Collaborative Research with the Transuranium Research Laboratory

Curium oxide was prepared from ^{248}Cm, and a special quenching technique was used to stabilize the hexagonal form. Previously, the hexagonal form was observed only by autotransformation caused by the self-irradiation of ^{244}Cm samples. The lattice parameters of the hexagonal form of ^{248}Cm sesquioxide were significantly smaller than those obtained with the ^{244}Cm isotope; the new values are a_0 = 3.791 ± 0.001 Å and c_0 = 5.961 ± 0.002 Å. The transition temperature for the monoclinic to hexagonal forms of this sesquioxide was determined to be 1600 ± 25°C.

The absolute specific activity and the half-life of ^{249}Cf were determined by means of an absolute microchemical analysis of the californium, mass spectrographic analysis, alpha spectroscopy, and absolute alpha counting.[13] The determination yielded a half-life of 350.6 ± 2.1 years and a specific activity of 9.09 × 10^6 ± 0.05 dis min^{-1} μg^{-1}.

11. R. G. Haire and L. B. Asprey, "The Preparation and Lattice Parameters of CfF_4," accepted for publication in *Inorg. Nucl. Chem. Lett.* (1973).

12. L. B. Asprey and R. G. Haire, "On the Actinide Tetrafluoride Lattice Constants," to be submitted to *Inorg. Nucl. Chem. Lett.* (1973).

13. J. R. Stokely, C. E. Bemis, Jr., R. D. Baybarz, and R. Eby, "The Absolute Specific Activity and Half-Life for ^{249}Cf," accepted for publication in *J. Inorg. Nucl. Chem.* (1973).

6. Development of the Thorium Fuel Cycle

Our work associated with development of the thorium fuel cycle (thorium and ^{233}U) is primarily concerned with the preparation of small spheres of oxide fuels to be coated with pyrolytic carbon for use in high-temperature gas-cooled reactor (HTGR) fuel blocks. Sol-gel processes are used to prepare high-density oxide spheres. Low-density spheres prepared from ion exchange resins offer an alternative type of "fissile" particle with internal void volume to accommodate fuel swelling and gas release.

6.1 SOL-GEL PROCESS DEVELOPMENT FOR THE PREPARATION OF MICROSPHERES

Sol-gel efforts during this report period were confined mainly to preparation of ThO_2 spheres. A report[1] was published to collect and clarify the process requirements for ThO_2 sphere preparation; the abstract is as follows:

Process requirements are given for the preparation of ThO_2 spheres by the use of ORNL sol-gel processes. The hydrothermal denitration of thorium nitrate to yield a dispersible ThO_2 powder has three critical requirements that can be satisfied by batch operation in a rotating stainless steel drum reactor. Stable 2.5 *M* ThO_2 sols are prepared by agitation of the ThO_2 powder with the optimum amount of dilute, hot nitric acid. Conditions have been improved for recycle of the 2-ethyl-l-hexanol medium for forming ThO_2 gel spheres. The optimum drying-firing conditions require argon to a temperature of 110°C and then argon-steam to at least 220°C, followed by firing in air to 1150°C.

The report describing the engineering-scale demonstration of the sol-gel preparation of UO_2 spheres was completed and published.[2]

Results from HTGR fuel development and evaluation studies have indicated that the optimum diameter for the fertile ThO_2 kernels is larger than the initially proposed 400 μm. Therefore, we rechecked the upper limits of ThO_2 sphere diameter for the ORNL sol-gel process. For our routine operating conditions, the first limiting effect is breakup of the drops to give two smaller drops; this breakup becomes excessive for drops that would give fired spheres with diameters larger than 600 μm. A more concentrated sol of low viscosity showed almost as much breakup, while a sol with an anomalously high viscosity showed essentially no breakup for drops that would give 700-μm-diam fired spheres.

Formation of the sol drops is a critical operation in the ORNL processes for forming gel spheres by extraction of water into an alcohol. The uniformity of the drops is important to the yield since oversized and undersized spheres constitute the principal off-specification material. Uniformity of the drops is essential to continuous operation of fluidized-bed sphere-forming columns. A recently developed technique that incorporates use of a sol disperser with vibration (Fig. 6.1) has met the dispersion requirements for the ORNL sol-gel processes better than any of the previous techniques employing dispersers alone.[3] With this new technique, the breakup of sol streams from orifices or capillaries is made more uniform and regular (Fig. 6.2) by imposing a vibration, at the natural frequency of drop formation, on the sol at the entrance to the orifices or capillaries. Batches consisting of 1 to 13 kg of fired ThO_2 spheres 370 to 500 μm in diameter had average diameters within 1% of the predicted values and standard deviations of 2.5 to 5.0 μm (Table 6.1).[3] Yields after size and shape separation were greater than 95%, and were usually greater than 98% in a 30-μm

1. P. A. Haas, *Process Requirements for Preparing ThO_2 Spheres by the ORNL Sol-Gel Process*, ORNL-TM-3978 (December 1972).

2. B. C. Finney and P. A. Haas, *Sol-Gel Process: Engineering-Scale Demonstration of the Preparation of High-Density UO_2 Microspheres*, ORNL-4802 (November 1972).

3. P. A. Haas and W. H. Lackey, *Improved Size Uniformity of Sol-Gel Spheres by Imposing a Vibration on the Sol in Dispersion Nozzles*, ORNL-TM-4094 (May 1973).

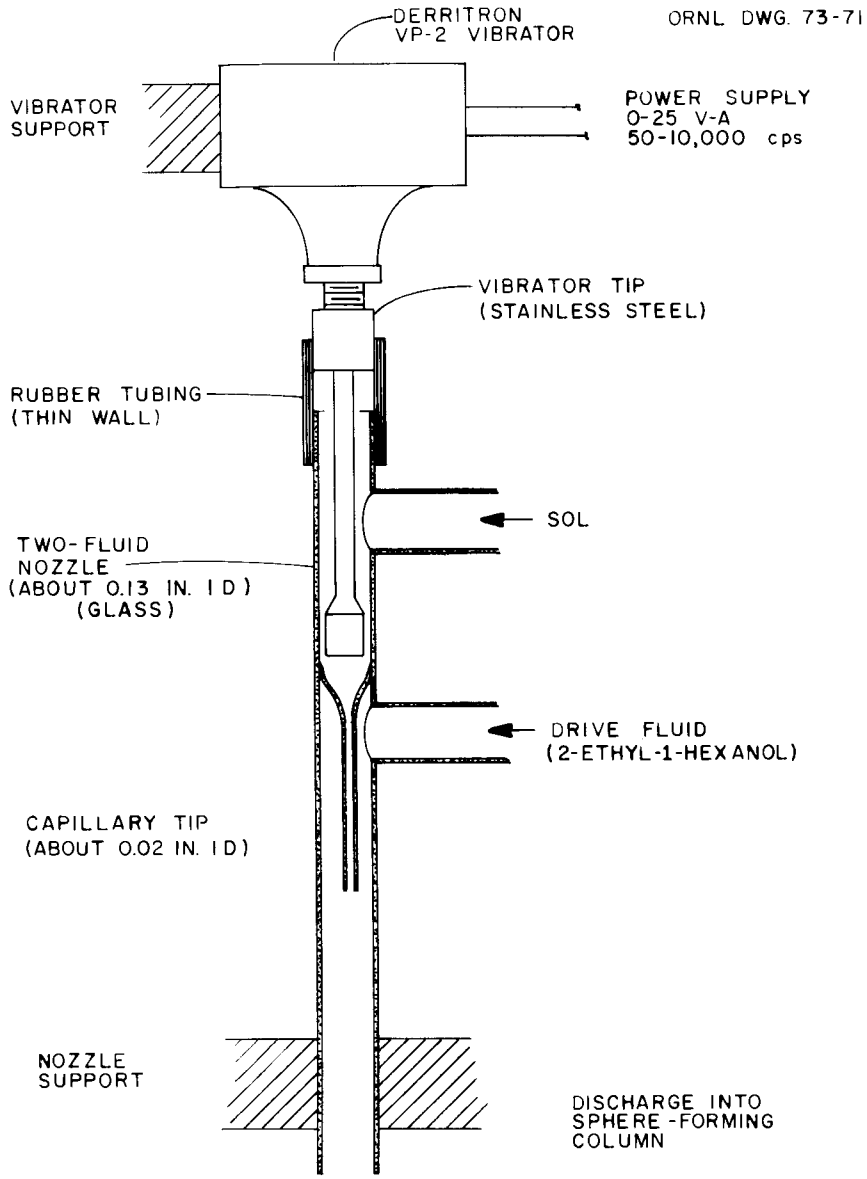

Fig. 6.1. Two-fluid nozzle with vibration.

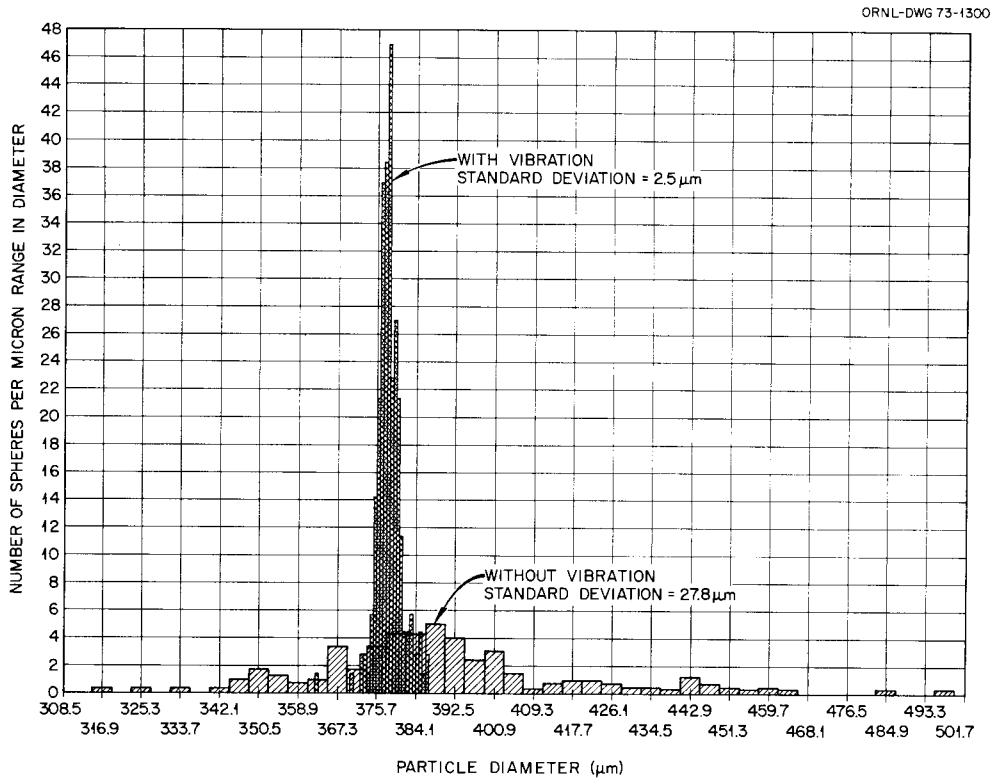

Fig. 6.2. Comparison of size distribution of ThO_2 microspheres made with and without vibration.

Table 6.1. Summary of size distribution results for sol-gel ThO_2 spheres made with vibration

Batch No.	Batch weight (kg)	Average diameter[a] (μm)	Standard deviation of diameter[a] (μm)	Conservative estimate of standard deviation of diameter (μm)	Tolerance interval (μm) 95%, 95%[b]	Tolerance interval (μm) 99%, 99%[c]	Rejected by shape plate (wt %)
J-146	2.2	378.0 ± 0.3	$2.5^{+0.4}_{-0.3}$	3.7	378.0 ± 8.0	378.0 ± 10.9	1.1
J-147	4.2	379.2 ± 0.5	$3.7^{+0.6}_{-0.5}$	4.6	379.2 ± 9.9	379.2 ± 13.5	1.4
J-148	2.6	489.4 ± 0.6	$4.2^{+0.7}_{-0.5}$	4.2	489.4 ± 9.1	489.4 ± 12.4	1.1
J-149	2.6	282.7 ± 0.7	$5.0^{+0.8}_{-0.6}$	7.7	282.7 ± 16.6	N.D.[d]	0.4
J-154	3.0	374.1 ± 0.3	$2.4^{+0.4}_{-0.3}$	4.7	374.1 ± 10.2	374.1 ± 13.8	0.9
J-157[e]	22.4	390.0 ± 3.9	$27.8^{+4.5}_{-3.4}$	N.D.[d]	N.D.[d]	N.D.[d]	0.9
J-172	13.2	499.8 ± 0.5	$3.6^{+0.6}_{-0.4}$	7.5	499.8 ± 16.2	499.8 ± 22.0	1.4
J-189	2.2	302.5 ± 0.8	$5.9^{+0.9}_{-0.7}$	5.9	302.5 ± 12.7	302.5 ± 17.3	0.15
J-190	0.9	207.2 ± 5.4	$38.9^{+6.3}_{-4.7}$	N.D.[d]	N.D.[d]	N.D.[d]	0.7
J-192	12.8	495.0 ± 0.3	$2.1^{+0.3}_{-0.3}$	N.D.[d]	N.D.[d]	N.D.[d]	0.6

[a]The uncertainty values give the 95% confidence interval, assuming that the distribution is normal.
[b]The probability is 0.95 that the reported range would include at least 95% of the kernels made by such a process.
[c]The probability is 0.99 that the reported range would include at least 99% of the kernels made by such a process.
[d]Not determined because departure from normal distribution was large.
[e]Made without vibration.

range. Single two-fluid nozzles with vibration were used routinely for over 500 hr of operation, including more than 100 startups and shutdowns at rates of 16,000 to 88,000 drops per minute. Multiple shear nozzles were used at higher rates.

6.2 PROCESS DEVELOPMENT FOR THE PREPARATION OF MICROSPHERES BY USING ION EXCHANGE RESINS

Spherical ion exchange resin beads can be loaded with uranium and subsequently carbonized to yield uranium oxide or carbide microspheres. These microspheres, which also contain free carbon and are somewhat porous, are relatively easy to prepare and have performed satisfactorily in irradiation tests.[4] They are being developed for possible use as fissile particles in HTGRs. The advantages of this method of kernel fabrication were outlined previously.[5] We are developing chemical flowsheets that will optimize the loading processes and will also be suitable for engineering scaleup.

Last year we reported[5] on the efficient loading of strong-acid resins from dilute uranyl nitrate solution, gave early results obtained by using a Higgins-type column for continuous loading of strong-acid resin, and discussed the loading of weak-acid resin by direct reaction with UO_3. Accomplishments during the current report period include extension of the continuous-column method to weak-acid resins, successful loading from uranyl fluoride solution, controlled partial loading of weak-acid resins, and further work relative to loading from UO_3. A topical report on loading from UO_3 was issued.[6]

The continuous-column method of loading is readily adaptable to strong-acid resins. With these resins the exchange equilibrium

$$2\text{Resin}\cdot\text{H} + UO_2(NO_3)_2 \rightleftharpoons \text{Resin}_2UO_2 + 2HNO_3$$

can be displaced quantitatively to the right by uranyl nitrate. Thus, in a properly operating column, resin and uranyl nitrate are fed continuously while loaded resin is withdrawn and dilute nitric acid effluent is discharged. Control is maintained, and the condition of the column is monitored, by observing the conductivity of the liquor at strategic locations. Using the column described previously,[5] a typical operating curve such as that shown in Fig. 6.3 was obtained for startup and steady-state operations. As uranyl ion is replaced by hydrogen ion, the conductivity increases fivefold. The sawtooth portions of the curves result from the periodic pulses that move the resin bed through the column.

With weak-acid resins, effective loading of uranium is achieved from an acid-deficient uranyl nitrate solution, which is obtained by reacting uranyl nitrate with excess UO_3 as follows:

$$UO_2(NO_3)_2 \xrightarrow{UO_3} UO_2(NO_3)_{2-x}(OH)_x,$$

where x is about 0.6. In batch loading, the uranyl nitrate, UO_3, and resin are mixed together. In the continuous-column method, the acid-deficient uranyl nitrate contacts excess resin and loads only to the degree that yields nearly stoichiometric uranyl nitrate:

$$1.5UO_2(NO_3)_{1.4}(OH)_{0.6} \xrightarrow{\text{excess Resin}\cdot\text{H}}$$
$$0.45R_2UO_2 + 1.05UO_2(NO_3)_2 + 0.9H_2O.$$

The uranyl nitrate effluent is then recycled by recontacting it with excess UO_3. Using the previously described equipment,[5] uranium was loaded onto weak-acid resin (Amberlite IRC-72) at the rate of 100 g of uranium per hour (in a 1-in.-diam column). The uranium distribution profile over the working length of the column was obtained by sampling the resin every 6 in. and analyzing for uranium content (Fig. 6.4). Although this profile is not nearly as sharp as that obtained for strong-acid resin, it is sufficiently well defined to indicate that full loading can be attained in a reasonable length.

Uranium loading from UO_2F_2 is of interest for new or makeup fissile particles that use ^{235}U, since enriched uranium must come from $^{235}UF_6$, and UO_2F_2 (an intermediate in the conversion of UF_6 to uranyl nitrate) is a more primary source of ^{235}U than is uranyl nitrate. Strong-acid resin (Dowex 50W-X8) was loaded successfully from 0.1 M UO_2F_2 solution in a static column. This resin was loaded to 92% of capacity using a 67% excess of uranium in a single-stage column, which is comparable to the loading efficiency obtained using uranyl nitrate. The product contained only 540 ppm of fluorine, although no special effort was made to minimize the fluoride content. Because of the strong

4. M. D. Silverman and C. B. Pollock, "Resin Fuel Particles for High Temperature Gas-Cooled Reactors," *Proceedings of the 11th Annual Conference on Carbon, Held at Gatlinburg, Tenn., June 4–8, 1973*, CONF-730601.

5. *Chem. Technol. Div. Annu. Progr. Rep. Mar. 31, 1972*, ORNL-4794, pp. 47–50.

6. P. A. Haas, *HTGR Fuel Development: Use of UO_3 to Load Cation Exchange Resin for Microsphere Preparation*, ORNL-TM-3817 (September 1972).

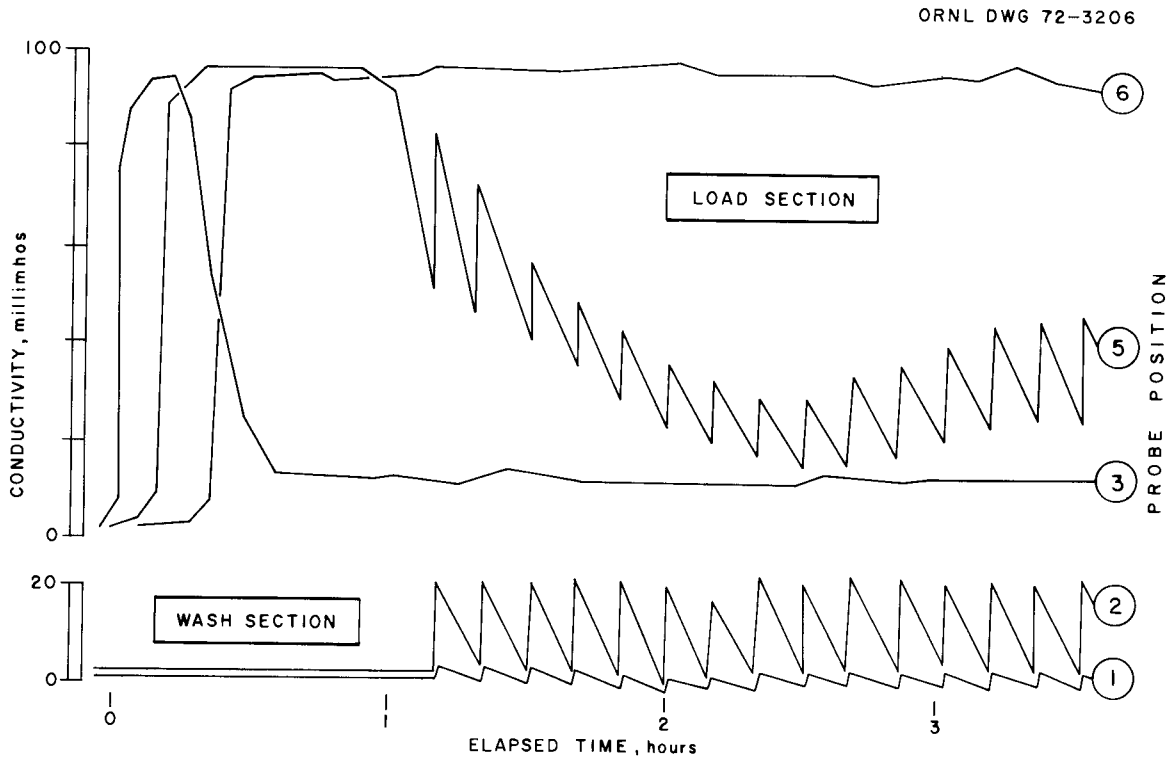

Fig. 6.3. Operating curves for continuous resin loading column: start-up and steady state.

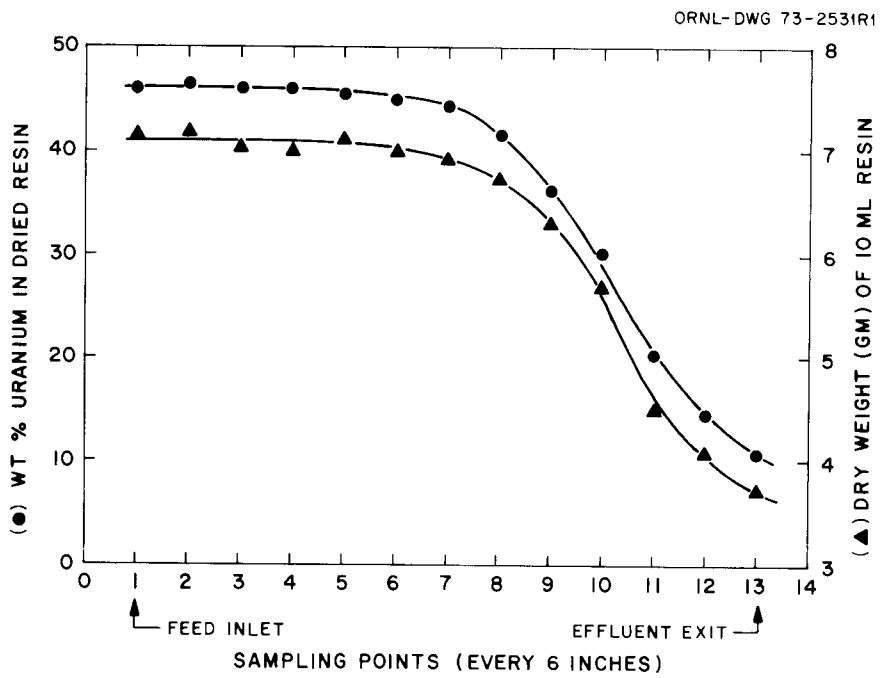

Fig. 6.4. Uranium profile for weak-acid resin loaded in continuous column.

complexing between F^- and UO_2^{2+}, UO_2F_2 is usually considered to be a weak electrolyte:

$$UO_2F_2 \rightleftharpoons UO_2F^+ + F^-, \qquad K = 5 \times 10^{-5}\ (25°C).$$

However, in the presence of a strong-acid resin, the complex is evidently split, causing the exchange to proceed as:

$$UO_2F^+ + 2HR \rightarrow UO_2R_2 + HF + H^+$$

for the net reaction:

$$UO_2F_2 + 2HR \rightarrow UO_2R_2 + 2HF.$$

Fully loaded resin may not be desirable for some applications. At lower uranium loadings, the final C/U ratio is greater. The porosity also tends to be greater, which may be desirable for some situations (e.g., when the fuel is to experience very high burnups). In the batch loading of weak-acid resins from UO_3, partial loading is easily achieved by simply limiting the quantity of UO_3. Uniformity of loading from bead to bead is achieved by using vigorous agitation. Loadings of kilogram amounts of Amberlite IRC-72 beads at 50% and 75% of their total capacity have been prepared in this way. X radiographs of the products indicate that the uranium distributes itself more or less uniformly across the diameters of the beads by the time the beads are dried and ready for carbonization. In contrast to the uniform partial loading described above, a procedure for nonuniform or "shell-type" loading of weak-acid resin has been developed. This would have application in instances where uranium-free centers are desired in carbonized resin beads. This procedure (for Amberlite IRC-72 weak-acid resin) is based on exchanging uranium with the NH_4^+ form of the resin. Ammonia is removed during firing, leaving only uranium, carbon, and (at lower firing temperatures) oxygen.

A study of the dissolution kinetics of UO_3 powders in dilute (0.3 *M*) HNO_3 was carried out in cooperation with the MIT Practice School at ORNL. Representative normal and 93%-enriched uranium oxides were used. The purpose of the study was to provide a basis for evaluating the soundness of a procedure for loading resins at intermediate levels of enrichment by using a mixture of normal and enriched UO_3 powders. The normal UO_3, which was produced by thermal denitration of uranyl nitrate, had a lower specific surface area but a smaller gross particle size than the enriched UO_3, which was prepared from an ammonium diuranate intermediate. The enriched UO_3 consisted of smaller elementary crystallites, but these were agglomerated into large aggregates. It was found that the dissolution rate was controlled by the gross particle size; natural UO_3 dissolved 1.5 and 2.5 times as fast as enriched UO_3 at 25°C and 70°C respectively. Since agitation rate had no effect on dissolution rate at 25°C, it was concluded that, at this temperature, the reaction rate was not controlled by diffusion of reactant through the surface film to the UO_3 to yield uranyl ion ultimately. At 70°C, the dissolution rate was dependent on the agitation rate, thus suggesting that the chemical reaction rate was fast relative to film diffusion. From these results it is obvious that simple mixing of natural and enriched UO_3 will not give the desired isotopic mixture on the loaded resin.

6.3 PREPARATION OF TEST MATERIALS

Sol-Gel Material

During this report period, we prepared and delivered more than 500 kg of ThO_2 spheres for use in HTGR programs, including coating development studies, irradiation tests, and reprocessing development test elements. We now have over 100 kg of ThO_2 spheres on hand or in process. A total of about 50 kg of other sol-gel thoria in several forms (hydrothermally denitrated powder, sol, gel spheres, and fired spheres) was delivered for a variety of uses.

Most of the thoria spheres were prepared in the Building 4505 process development equipment, which has a maximum capacity of 20 kg of ThO_2 spheres per week. One trained operator can easily handle all operations from sol preparation to sphere firing at the rate of 15 kg/week. The larger CPDL microsphere preparation system requires more than one operator and is less efficient overall as a result of the capacity limitations of the single sphere dryer and the batch firing furnace. Our preferred processes for preparing ThO_2 spheres are described in reports on equipment,[7] process conditions,[1] and an improved sol dispersion device.[3]

ThO_2-$^{235}UO_2$ spheres of four Th/U ratios (4.2, 2, 1, and 0) and ThO_2-$^{233}UO_2$ spheres of two Th/U ratios (4.2 and 1) were prepared for irradiation experiments. Four batches of $^{235}UO_2$ sol and two batches of

7. P. A. Haas, *Sol-Gel Preparation of Spheres: Design and Operation of Fluidized Bed Columns,* ORNL-4398 (September 1969).

$^{233}UO_2$ sol were produced by precipitation-peptization and mixed with ThO_2 sol to provide the desired compositions. A small amount of ThO_2-$^{233}UO_2$ sol was produced by solvent extraction.

Ion Exchange Resin Material

Kilogram quantities of uranium-loaded resins were prepared for subsequent firing and carbonization tests or for eventual use in irradiation experiments. In addition, small quantities of resin for special tests were loaded with thorium, strontium, or mixed uranium-zirconium. The uranium loadings included:

1. About 14 liters, or 7 kg, of Dowex 50W-X8 ion exchange resin (strong-acid type) loaded in the continuous column with ^{238}U from uranyl nitrate solution.
2. About 8 liters, or 6 kg, of Amberlite IRC-72 ion exchange resin (weak-acid type) loaded batchwise with ^{238}U from UO_3.
3. About 2 kg of Amberlite IRC-72 loaded in the continuous column with ^{238}U from acid-deficient uranyl nitrate solution.
4. About 2 kg of Amberlite IRC-72 loaded batchwise to partial capacity (50% and 75%) with ^{238}U from UO_3.
5. About 650 g of Amberlite IRC-72 loaded with ^{233}U from UO_3 in a glove-box operation. The loading reaction was complicated by the formation of a precipitate, apparently a hydrous U(IV) oxide, which had to be collected by filtration, oxidized, and recycled. It appears that, in the presence of the (organic) resin, the high alpha activity level of the ^{233}U and its daughters promotes reduction of U(VI).
6. About 150 g of Dowex 50W-X8 loaded with ^{233}U from uranyl nitrate solution, also in a glove-box operation. There was no evidence of U(IV) formation in this case, probably because of the greater acidity (which would prevent precipitation) and the higher nitrate content (which would reoxidize any tetravalent uranium that might be formed).
7. About 1 kg of Dowex 50W-X8 loaded in the continuous column with ^{235}U from uranyl nitrate solution.
8. About 300 g of Amberlite IRC-72 loaded batchwise with ^{235}U from UO_3.

6.4 SOL-GEL PROCESS FLOWSHEET EVALUATION

A comparative economic assessment is being made of methods for preparing HTGR fuel kernels. The study will eventually include several types of HTGR fuel kernels, for example, fresh uranium and thorium plus recycled ^{233}U, thorium, and ^{235}U. To date, the study has been limited to processes for ^{233}U.

The Solex process[8,9] for oxide fuel kernels with a thorium/uranium ratio of 4.25 and the CUSP process[10] for urania fuel kernels have been evaluated. The evaluation includes process equipment, building, and owner's costs. The costs associated with waste handling and with operating will be estimated later.

The method used to arrive at the cost was as follows:

1. A flowsheet which includes all of the significant steps (process and equipment) was prepared, and a volumetric material balance was made to determine the volume of each equipment item.
2. Costs were estimated for process equipment items for a conventional chemical plant. In instances where parallel units were required because of criticality considerations, a learning factor for their fabrication was applied. This factor reduced the estimated cost of additional units by 15% for each multiple of 2; that is, units 2, 4, 8, 16, etc., cost 15% less than the previously listed unit in this series.
3. The type of hot cell (one of five types) required for each equipment item was identified, and an estimate of its area and height was made. The five types of cells were: (1) medium shielded, remote maintenance; (2) medium shielded, contact maintenance; (3) unshielded alpha, contact maintenance; (4) chemical makeup; and (5) dry chemical storage.
4. Scale factors were applied to the process equipment cost in order to estimate installation, piping, and instrumentation costs. Different scale factors were used for the various cell types.

---

8. J. R. Parrott, F. L. Daley, J. T. Furman, and J. W. Snider, "Demonstration of $^{233}UO_2$-ThO_2 Microsphere Production by the Sol-Gel Process," *Trans. Amer. Nucl. Soc.* **12**(1), 27–28 (1969).

9. *Chem. Technol. Div. Annu. Progr. Rep. Mar. 31, 1971*, ORNL-4682, pp. 133–37.

10. J. P. McBride, K. H. McCorkle, W. L. Pattison, and B. C. Finney, "The CUSP Process for Preparing Concentrated Crystalline Urania Sols by Solvent Extraction," *Nucl. Technol.* **13**, 148 (1972).

5. Scale factors were applied to the various cell areas and heights to determine the building cost. The sum of the equipment and building costs was defined as the direct construction cost.
6. Scale factors were applied to the direct construction cost in order to determine the indirect construction cost and the plant owner's cost.

For plants that could process ^{233}U at rates of 30 to 180 kg/day, the equipment cost for the CUSP process is only about two-thirds of that for the Solex process. Further, as the processing rate increases, the CUSP process apparently makes more efficient use of the cell spaces than does the Solex process. At a processing rate of 30 kg of ^{233}U per day, the process equipment cost is 10% of the total plant cost for the CUSP process and 9.25% of the total plant cost for the Solex process; at 180 kg of ^{233}U per day, it amounts to 11% of the total plant cost for the CUSP process and 8% of the total plant cost for the Solex process. It should be borne in mind that the total plant cost for the CUSP process is less than that for the Solex process; hence the CUSP process equipment is cheaper than the Solex process equipment, even though it represents a larger percent of the total plant cost.

6.5 ^{233}U STORAGE, PURIFICATION, AND DISTRIBUTION

Oak Ridge National Laboratory serves as a national distribution center for ^{233}U. The facility includes shielded wells for storing up to 454 kg of ^{233}U in solid form (density = 1 g/cm^3) and tanks (containing borosilicate glass for neutron poisoning) that can store 900 kg of ^{233}U in the form of uranyl nitrate solution at ^{233}U concentrations up to 250 g/liter. Also, a shielded interim storage vault (located in cell 3) can hold up to 70 kg of ^{233}U or ^{239}Pu in shipping containers.

The storage facility accepts ^{233}U in the form of uranyl nitrate solution or as properly packaged solids. The solids may consist of uranium metal or uranium compounds that can be readily and safely dissolved in stainless steel equipment.

The purification facilities include a single-cycle solvent extraction system that is capable of purifying ^{233}U at the rate of 25 kg/week. An ion exchange and nitrate-to-oxide conversion line, with a capacity of 22 kg of ^{233}U per week, has been placed in operation for the LWBR support program.[11]

Receipts during this report period consisted of 18.3 kg of ^{233}U as uranyl nitrate solution (two shipments) and impure oxide (two shipments) from Nuclear Fuel Services, Erwin, Tennessee.

As of March 31, 1973, 1181.6 kg of ^{233}U and 800.2 kg of ^{235}U are stored at the facility. Of these quantities, 101.6 kg of ^{233}U and 800.2 kg of ^{235}U as uranyl nitrate are stored in the TRUST (Thorium Reactor Uranium Storage Tank) facility.[12] After storage for 4 years, the uranium and soluble poison (cadmium and gadolinium) concentrations have been found to remain constant.

---

11. *Chem. Technol. Div. Annu. Progr. Rep. Mar. 31, 1972,* ORNL-4794, pp. 52–53.
12. J. R. Parrott, R. G. Nicol, and J. P. Nichols, *Receipt and Analysis of the Consolidated Edison Uranium Product Solution and Subsequent Storage Using Soluble Neutron Absorbers,* ORNL-TM-3348 (June 1971).

7. Preparation of $^{233}UO_2$

ORNL's contract with Bettis Atomic Power Laboratory (BAPL) to prepare $^{233}UO_2$ involves (1) purifying several hundred kilograms of ^{233}U (presently stored in the facility) at the rate of approximately 20 kg of ^{233}U per week, (2) converting the purified uranyl nitrate to ceramic-grade UO_2 powder at the rate of about 20 kg of ^{233}U per week, (3) packaging and shipping the UO_2 to BAPL for blending with thoria and pressing into pellets, and (4) recovering ^{233}U from the $^{233}UO_2$ scrap generated at ORNL and the $^{233}UO_2$-ThO_2 scrap generated at BAPL.

During the past year, the scrap dissolver to be used for converting $^{233}UO_2$-ThO_2 sintered recycle pellets to a nitrate solution suitable as feed for the solvent extraction purification system was tested with sintered ThO_2 pellets. The solvent extraction system operated successfully after the extraction height was increased, the pulsed columns were cleaned, and the inventory of extractant was replaced. The ion exchange system operated satisfactorily for several runs; however, it was necessary to replace the large ion exchange column due to plugging and resin leakage. Testing of the conversion process and equipment was completed, and 20 kg of preproduction $^{233}UO_2$ powder was shipped to BAPL for evaluation. We expect to begin routine production of powder for BAPL by May 1, 1973.

7.1 DISSOLUTION OF SINTERED ThO_2 PELLETS

The dissolution procedure developed earlier[1] was tested in the UO_2-ThO_2 scrap dissolver using sintered pellets. These pellets were typical of those expected to be received as scrap for BAPL, with the exception that the scrap pellets will contain up to 6% uranium. Our results showed that 56 kg of ThO_2 can be dissolved in 6 hr at a temperature of 105 to 115°C by using an original charge of 200 kg of crushed ThO_2 pellets and a dissolvent of the composition 12 *M* HNO_3–0.04 *M* F^-–0.1 *M* $Al(NO_3)_3$. The thorium concentration of the resulting solution was 1.2 *M*, which is sufficiently high for solvent extraction feed. Subsequent additions of fresh dissolvent to the "heel" showed that the dissolution rate decreased from 9.3 kg of ThO_2 per hour (averaged over a 6-hr period) to 0.9 kg of ThO_2 per hour (averaged over an 18-hr period) after the fourth addition. This amounts to a 50% decrease after each 50-kg dissolution due to the reduction in surface area available for the fresh dissolvent. These data indicate that the desired dissolution rate of 100 kg of pellets per 24-hr day can be attained by using the dissolvent specified above and by maintaining a 150-kg pellet "heel" in the dissolver. The data further indicate that complete cleanout of the dissolver will be a formidable task.

7.2 ^{233}U PURIFICATION SYSTEMS

The solvent extraction purification system was operated to recover ^{233}U from five batches (18 kg of ^{233}U each) of material generated during testing of the ion exchange and conversion systems. In the first two runs, the ^{233}U loss to the aqueous raffinate was 0.3 to 0.5%. At the end of these runs, the columns were emptied, filled with 6 *M* HNO_3, and purged with diethylbenzene (DEB) to remove any emulsion which had accumulated. The extraction height was then increased to 34 ft, leaving 12 ft of scrub height. Finally, the extractant (5% di-*sec*-butyl phenylphosphonate in DEB) inventory was replaced with fresh material. Following these changes, three runs, resulting in low losses (0.12%) to the raffinate and an effective thorium separation (a thorium decontamination factor of 10^4), were made.

During the past year, a total of approximately 180 kg of ^{233}U was purified in 12 runs in the ion exchange equipment. Operation of the system was satisfactory except for failure of the retainer screen that holds the resin in the larger column. This failure was attributed to compaction of the resin, emphasizing the need for

1. *Chem. Technol. Div. Annu. Progr. Rep. Mar. 31, 1972*, ORNL-4794, p. 52.

excessive pressure to maintain the desired flow rate. A new column, which was equipped to permit elution countercurrent to the process flow, was installed. One batch of product nitrate solution from the ion exchange system had a higher copper concentration than specified (57 ppm vs 40 ppm). The high copper content was attributed to the copper tubing used in the steam line that supplies steam to the jet exhauster used to transfer the solution. This system was replaced with one fabricated from stainless steel.

7.3 CONVERSION OF ^{233}U FROM NITRATE SOLUTION TO CERAMIC-GRADE DIOXIDE POWDER

A total of 60 kg of ^{233}U, in lots varying from 4 to 10 kg each, was converted to UO_2. Approximately 40 kg of this material was prepared in order to test the flowsheet and equipment and to train personnel. The remaining 20 kg was shipped to BAPL. This material was prepared in accordance with our approved process outline and Quality Verification Plan.

During the early phases of operation, we witnessed ignition of the wet cake during drying in the microwave oven. This problem, which apparently stemmed from a high nitrate concentration in the cake, was solved by washing the cake with demineralized water to remove the ammonium nitrate prior to drying. It was also necessary to modify the drying cycle to compensate for the variation in holdup of residual liquid in different centrifuge bowl liners. In addition, a high fluoride content in the dried cake and the UO_2 powder was attributed to a release of volatile fluoride from the Teflon liner. This problem was eliminated by conditioning each new liner, by boiling with water to remove the volatile fluoride compound, prior to placing it in use for drying the cake.

8. Separations Chemistry Research and Development

New separations methods are being developed, principally for uses in radiochemical processing but also for other purposes extending from extractive metallurgy to biochemistry. The program in separations chemistry divides into three parallel, interdependent, and frequently overlapping activities: (1) descriptive chemical studies (Sects. 8.1, 8.6, 8.8) of the reactions of substances to be separated and of separations agents, of the controlling variables in particular separations, and of potential new reagents and methods; (2) development (Sects. 8.2–8.7) of selected methods into specific complete processes, both where no process exists and where existing processes can be improved, carried when warranted to the point that large-scale performance can be predicted; and (3) fundamental chemical studies (Sects. 8.8, 8.9) of the species, equilibria, and mechanisms involved in separations systems, both to increase knowledge and to help define potential applications.

8.1 NEW SEPARATIONS AGENTS

We are continuing to investigate, for potential utility in separations methods, compounds that are newly available commercially, submitted by manufacturers for testing, or specially procured for testing of class or structure.

Di-*sec*-butyl phenylphosphonate (DSBPP)[1] is used routinely for uranium-thorium separation in the purification of ^{233}U at the Building 3019 solvent extraction facility (cf. Chap. 7). Recently, its availability from the one commercial source was ended. Material offered from a new source failed to meet specifications, presumably because of less efficient vacuum distillation. Examination of this material showed that it contains a small amount of a contaminant having high extraction power for thorium (impairing the uranium-thorium separation); however, further investigation revealed that this contaminant can be completely removed by scrubbing with a dilute solution of sodium carbonate. The scrubbed reagent is satisfactory for the uranium-thorium separation, and thus a routine supply of DSBPP is again assured.

Samples of two moderately high-molecular-weight substituted anilines, dodecylaniline[2] and 2,6-diisopropylaniline,[3] were obtained for examination as part of a search for reagents to separate uranium(VI) from thorium or from uranium(IV) in sulfate systems. These anilines were found not to be useful for that purpose, giving less separation than do aliphatic primary amines. They may be useful anion exchange extractants in some other systems, provided that some water solubility is tolerable.

Acidic alcoholysis products of P_2O_5 were formerly used for extracting uranium from commercial phosphoric acid.[4] In an effort to find a strong extractant for concentrating and "desalting" transplutonium actinides in TRU processing (Sect. 5.4), we prepared an analogous polyphosphoric acid derivative of 2-ethylhexanol in hydrocarbon solution. Conditions were found to produce an extractant that gives extraction coefficient values in the thousands for americium and europium from any nitric acid concentration up to 8 *M*. As expected, the extracted elements can be stripped only by destruction (hydrolysis) of the reagent. This in itself is acceptable, since the extractant would be used on a "once-through" basis in any case, but the presence of the resulting inorganic phosphoric acid in the product would seriously limit the application of this extractant in TRU processing.

Various good extractants are being evaluated with regard to their suitability in "extractive scintillators" (Sect. 8.8). The principal question to be answered in

1. *Chem. Technol. Div. Annu. Progr. Rep. Aug. 31, 1960*, ORNL-2993, p. 149.

2. Monsanto Chemical Company, Organic Chemicals Division, St. Louis, Mo.

3. Ethyl Corporation, Commercial Development Division, Ferndale, Mich.

4. A. S. Long, D. A. Ellis, and R. H. Bailes, *Proc. Intern. Conf. Peaceful Uses At. Energy, Geneva, 1955* 8, 77 (1956).

each case is whether the extractant may cause excessive quenching. Tri-*n*-octylamine (TOA) chloride up to 0.05 *M* and di-*n*-decylamine and 1-*n*-nonyl-*n*-decylamine sulfates up to 0.1 *M* were found to decrease the scintillator response to ^{233}U by 10% or less. Thus we can add these compounds to the list of such extractants as di(2-ethylhexyl)phosphoric acid (HDEHP), trioctylphosphine oxide (TOPO), and TOA sulfate.

8.2 PLUTONIUM PURIFICATION WITH AMINES

Numerous investigators have studied the use of amines for extracting and purifying plutonium in the reprocessing of reactor fuels. Most of our tests[5] have been made with secondary amines, rather than the usual trilaurylamine, because they are easily stripped with dilute nitric acid and may have other process advantages.

We have been comparing the extraction characteristics of two secondary amines, di(tridecyl)amine and Amberlite LA-1, with those of trilaurylamine and tributyl phosphate (TBP). Since plutonium extraction has been fairly well characterized, emphasis is being placed on the behavior of the major fission products. Studies of ruthenium extraction were reported previously.[6]

Data for extraction of ^{95}Zr-^{95}Nb from nitric acid with secondary and tertiary amines and with TBP are shown in Fig. 8.1. The extraction coefficients for the different amines varied over a wide range; those for Adogen 364, a tertiary amine, were the lowest. In the HNO_3 concentration range of 2 to 5 *M*, the coefficients for di(tridecyl)amine (0.3 *M*) in dodecane were about an order of magnitude lower than those obtained with the same extractant in diethylbenzene (DEB) or with 0.56 *M* TBP in dodecane.

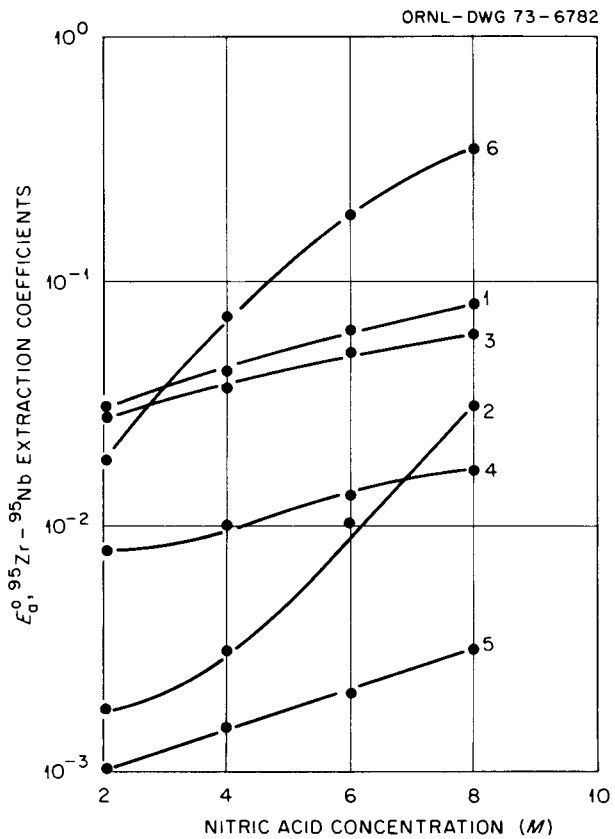

Fig. 8.1. Extraction of ^{95}Zr-^{95}Nb with selected secondary and tertiary amines and with TBP. Aqueous phase: HNO_3 with 0.005 *M* Zr traced with ^{95}Zr-^{95}Nb. Organic phase: (1) 0.3 *M* di(tridecyl)amine in DEB; (2) 0.3 *M* di(tridecyl)amine in dodecane; (3) 0.3 *M* Amberlite LA-1 in DEB; (4) 0.3 *M* trilaurylamine in DEB; (5) 0.3 *M* Adogen 364 in DEB; and (6) 0.56 *M* TBP in dodecane. Phase ratio: 1/1.

8.3 RECOVERY OF URANIUM FROM WET-PROCESS PHOSPHORIC ACID

Laboratory tests of an alternative first-cycle extraction process[7] for recovering uranium from wet-process phosphoric acid were completed during this report period. This process uses an equimolar mixture of mono- and dioctylphenylphosphoric acid (OPPA) as the extractant rather than the synergistic combination[8] of di(2-ethylhexyl)phosphoric acid (D2EHPA) and trioctylphosphine oxide (TOPO) used previously. The OPPA solvent extracts uranium(IV); therefore, an oxidation step prior to extraction is not needed. Also, it is much less expensive and has higher extraction power than the D2EHPA-TOPO solvent. In either case, D2EHPA-TOPO is used in a second cycle to produce a high-grade U_3O_8 concentrate.

In the process, the uranium is extracted at about 40°C with 0.35 *M* OPPA in Amsco 450 and stripped with wet-process acid (evaporated to 10 *M* H_3PO_4) that contains sodium chlorate; the chlorate oxidizes the

5. *Chem. Technol. Div. Annu. Progr. Rep. May 31, 1967*, ORNL-4145, p. 55; *Chem. Technol. Div. Annu. Progr. Rep. May 31, 1968*, ORNL-4272, p. 54; *Chem. Technol. Div. Annu. Progr. Rep. May 31, 1969*, ORNL-4422, p. 82.

6. *Chem. Technol. Div. Annu. Progr. Rep. Mar. 31, 1972*, ORNL-4794, p. 55.

7. *Chem. Technol. Div. Annu. Progr. Rep. Mar. 31, 1972*, ORNL-4794, pp. 55–57.

8. F. J. Hurst, D. J. Crouse, and K. B. Brown, "Recovery of Uranium from Wet-Process Phosphoric Acid," *Ind. Eng. Chem., Process Design Develop.* 11(1), 122–28 (1972).

uranium to the less-extractable hexavalent state. In preliminary testing of the process,[7] (1) chlorate consumption was excessive; (2) the solvent lost extraction power with cycling, apparently due to extraction of organic material from the liquor; and (3) phase separation in the extractor was not satisfactory. These problems have now been at least partially solved.

An 80-cycle run was made in bench-scale mixer-settler units with four extraction and three stripping stages. In order to simplify the operation, "pure" 6 *M* H_3PO_4 (containing only Fe^{2+} and U^{4+}) was processed over the first 35 cycles. About 200 gal of "green" acid, obtained from two commercial phosphate plants, was then processed successfully. ("Green" acid is produced from phosphate rock that has been calcined to eliminate organic matter.) Finally, regular ("brown") wet-process acid was treated during the final 20 cycles. Uranium recoveries were 90% or greater, and the strip product solution contained 15 to 20 g of uranium per liter.

We found that consumption of sodium chlorate could be decreased to near the stoichiometric requirement (0.18 lb per pound of U_3O_8) by adding most of it, in the form of an almost saturated water solution, to the first stripping stage; the balance was added to the third stage. Also, the stripping system was operated at 30°C and was sealed from the atmosphere. Evidently, chlorate reacts with chloride in the acid to produce chlorine or chlorine dioxide. If these gaseous products are contained, rather than being allowed to escape, much more efficient utilization of the chlorate is achieved. Addition of sodium chlorate to the system caused precipitation of sodium silicofluoride, but this did not cause physical problems.

Samples of the solvent, which were taken periodically, showed no appreciable loss of extraction power with cycling (Table 8.1). Solvent titrations showed that the sum of the concentrations of the mono- and di-OPPA components remained relatively constant although the mono-OPPA/di-OPPA ratio changed. Preferential loss of the mono-OPPA would be expected since other measurements have shown that its distribution loss to the aqueous phase is about 25 parts per million parts of aqueous, whereas distribution loss of the di-OPPA is negligible. Interpretation of the titration data is difficult since the extent of diluent evaporation is not known and since a considerable volume of fresh solvent was added during the run to compensate for solvent losses from sampling, evaporation, entrainment, and spillage. Nevertheless, these data do serve to confirm that the reagent is stable enough for process use and that distribution losses are low.

Table 8.1. Effect of cycling on solvent composition and uranium extraction power

Number of organic cycles	Type of acid processed	Uranium extraction coefficient,[a] E_a^o	OPPA concentration (*M*)		
			Mono-	Di-	Total[b]
Start		11.4	0.175	0.151	0.326
35	Pure	11.3	0.148	0.158	0.306
60	"Green"	10.7	0.154	0.174	0.328
80	"Brown"	10.5	0.175	0.170	0.345

[a]Solvent sample was subjected to a standard extraction test with wet-process phosphoric acid at 25°C.

[b]Sum of the mono- and di-OPPA components. The original solvent and the solvent that was added to compensate for volume losses over the first 60 cycles analyzed 0.175 *M* mono- and 0.151 *M* di-OPPA; the replacement solvent over the last 20 cycles analyzed 0.187 *M* mono- and 0.157 *M* di-OPPA.

The extraction units were operated in two modes: with the aqueous phase continuous, and with the organic phase continuous. Although much higher throughputs were attained during operation with the aqueous phase continuous, the amount of solvent entrained in the raffinate was excessive when this mode of mixing was used. During the processing of "green" acid, operation was smooth and there was essentially no buildup of solids at the aqueous-organic interface. With "brown" acid, results were much more variable. When the feed contained dispersed solids, most of the solids accumulated at the interface and the settlers flooded rapidly. However, with filtered feed, operation was satisfactory. Pilot-plant tests with fresh acid at the plant site are needed to determine whether the process can successfully treat "brown" acid.

8.4 SEPARATION OF RADIUM FROM URANIUM ORE TAILINGS

We are studying certain aspects of the radium pollution problem associated with uranium milling. Our purpose is to characterize the leaching of radium from uranium ores and sulfate-leached ore tailings, with the eventual objective of decreasing the leachability of radium from the tailings of present processes or removing the radium (and other radionuclides) from the ore wastes by a special process.

From 80 to 90% of the radium in sulfuric acid-leached tailings is found in the slimes (−150 mesh) fraction, which represents only about 20% of the ore by weight. Our initial efforts have been directed toward determining the leachability of uranium from these

fines. Several leaching agents were tried, including some that were found previously[9] to be effective for removing radium from ore tailings. The results showed that 70 to 90% of the radium was removed from the slime tailings by leaching for 16 hr at room temperature and about 3% pulp density with 1 *N* solutions of KCl, $FeCl_3$, Na_4EDTA, Na_5DTPA, $CaCl_2$, and $BaCl_2$.

About 95% of the radium was removed from a sample of uranium ore obtained from the Ambrosia Lake district (New Mexico) by repeated leaching at 85°C with 3 *M* HNO_3 or 3 *M* HCl. Some of this ore was leached, first, with sulfuric acid (which removes <5% of the radium) and, then, with 3 *M* HNO_3; this treatment removed about 96% of the radium from the slimes fraction but only 66% from the sands fraction.

8.5 SEPARATION OF ALPHA EMITTERS FROM FUEL REPROCESSING WASTES

The high-level waste generated by the processing of spent fuels by a standard Purex solvent extraction procedure contains most of the fission products, americium, curium, and neptunium, as well as small amounts of plutonium and uranium that were not recovered in the solvent extraction processing. The actinides constitute only a small fraction of the hazard associated with the waste at the time of discharge from the reprocessing plant; however, because of their long lives, they become the controlling hazard after several hundred years. Removal of these actinides from the waste could simplify the long-term storage problem associated with such waste.

We have initiated a program to search for separation procedures that will provide highly efficient removal of these alpha emitters. Emphasis in the initial tests has been centered on the solvent extraction of americium and curium since these elements appear to be the most difficult to separate from the waste. Several organic extractants were screened for their ability to extract cerium and europium (stand-ins for americium and curium) from nitric acid and nitrate salt solutions. None of the extractants examined, with the exception of octylphenylphosphoric acid (approximately equimolar mixture of mono- and di- acids) and a "pyro" phosphoric acid (reaction mixture of octanol and P_2O_5), extracted cerium(III) significantly from nitric acid that was 1 *M* or higher in concentration. The extraction coefficient with octylphenylphosphoric acid (0.3 *M*) was 60 from 1 *M* HNO_3 but decreased to <1 as the acid concentration was increased to 5 *M*. The "pyro" reagent, although an efficient extractant, is unstable and would not be suitable for process use.

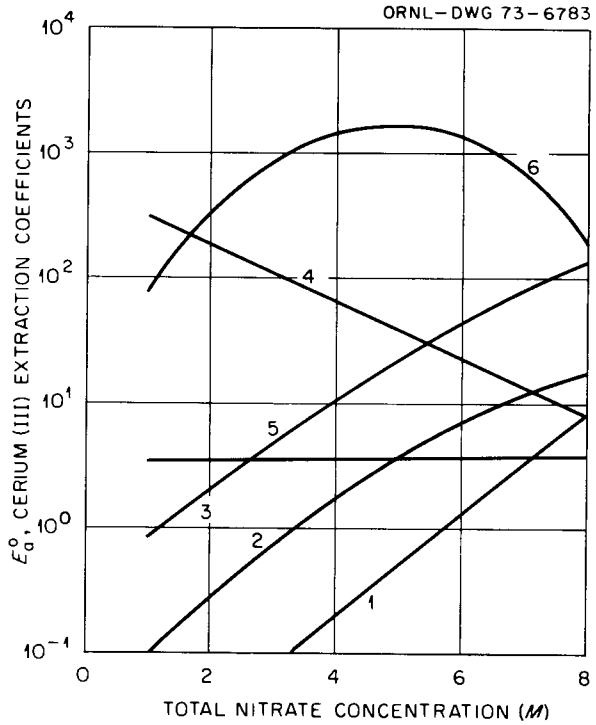

Fig. 8.2. Extraction of cerium(III) from $LiNO_3$–0.2 *M* HNO_3. Aqueous phase: 0.005 *M* Ce(III) traced with ^{144}Ce. Organic phase: (1) 0.3 *M* Adogen 464 (quaternary) in 95% diethylbenzene–5% tridecanol; (2) 0.3 *M* diamyl amylphosphonate in dodecane; (3) 0.3 *M* methyltrioctylphosphonium nitrate in 95% diethylbenzene–5% tridecanol; (4) 0.3 *M* octylphenylphosphoric acid in dodecane; (5) 0.3 *M* di(tridecyl)phosphoric acid in dodecane; (6) 0.3 *M* TOPO in benzene. Phase ratio: 1/1.

Reasonably efficient extraction of cerium(III) was obtained with several solvents, however, from lithium nitrate solutions that were 0.2 *M* in nitric acid (Fig. 8.2). The extraction power of octylphenylphosphoric acid decreased as the salt concentration was increased, but the opposite effect was observed for most of the other extractants. The extraction coefficients with trioctylphosphine oxide (TOPO) ranged from 70 to 1900 and, over most of the nitrate concentration range, were considerably higher than those obtained with the other extractants.

8.6 HIGH-RESOLUTION RARE-EARTH SEPARATIONS

Three papers have been prepared on aspects of rapid lanthanide and actinide separations. The abstracts

9. S. D. Shearer, "The Leachability of Radium-226 from Uranium Mill Solids and River Sediments," Ph.D. thesis, University of Wisconsin, Madison, 1962.

follow:

"Rapid Rare Earth Separation by Pressurized Ion Exchange Chromatography," by D. O. Campbell, *Journal of Inorganic and Nuclear Chemistry*, in press. *Abstract:* The use of pressurized ion exchange chromatography for the rapid separation of all the rare earth elements was demonstrated. With Dowex 50W-X8 ion exchange resin and a concentration gradient of α-hydroxyisobutyrate solution, quantitative separations were achieved in 1 to 2 hr when rare earth loadings were several percent of the resin capacity. The results indicate that scale-up to industrial production rates is practical.

"Rapid Lanthanide and Actinide Separations with Pressurized Ion Exchange Chromatography," by D. O. Campbell, presented at the 10th Rare Earth Research Conference, Carefree, Arizona, April 1973. *Abstract:* The rapid separation of macro amounts of rare earth elements was demonstrated using elution development chromatography with Dowex 50 resin and α-hydroxyisobutyrate eluent in a pressurized ion exchange system. Quantitative separations were obtained with rare earth loadings of several percent of the resin capacity, but elution curves differed significantly from behavior at tracer concentrations.

All 15 rare earths were separated in times as short as $1\frac{1}{2}$ hr by using finely divided resin, high flow rates, and columns as short as 9 cm. In most cases the effective height of a theoretical plate was a few tenths mm. The results indicate that, aside from the obvious analytical application, scale-up to industrial production rates should be practical.

Pressurized ion exchange permits chromatographic separations to be carried out with extremely radioactive materials which cannot be processed with conventional methods. Presently all transcurium elements (Bk, Cf, Es, and Fm) produced at Oak Ridge National Laboratory are separated and purified by this method.

"Interferences in Rapid Rare Earth Separations," by D. O. Campbell, submitted for publication in the *Journal of Inorganic and Nuclear Chemistry*. *Abstract:* The pressurized ion exchange chromatographic separation of the seven rare earths from Tb to Pr was studied using the Dowex 50W-X8 resin–α-hydroxyisobutyrate system. With 5% resin loading, there were differences from behavior at tracer concentrations in regard to band shape, band width, and elution position. These differences probably result from interference at the relatively high rare earth concentrations present. Good separations could be achieved, however, with column loadings of 5%, flow velocities of 16 ml cm^{-2} min^{-1}, columns as short as 9 cm, and a length-to-diameter ratio as low as 10.

The results of these studies confirmed that smaller resin particles in shorter columns give more rapid separations without sacrifice of resolution. However, certain characteristics of the elution curves were not in accord with idealized behavior generally predicted by theory; these include band shape and elution position (distribution coefficient). At higher resin loadings (i.e., ~10% of total column capacity), additional deleterious changes in elution behavior occurred. In spite of these factors, good separations were obtained in short times; for example, the quantitative separation of all 15 rare earths in milligram amounts was accomplished in less than 100 min.

8.7 ISOTOPE ENRICHMENT BY (n,γ) REACTIONS IN MOLECULAR SIEVES

A paper is to be presented at the Third International Conference on Molecular Sieves, Zurich, Switzerland, September 1973, and to be published in the *Advances in Chemistry* series. The abstract follows:

"Isotope Enrichment of the Product of a Neutron Capture (n,γ) Reaction in Lanthanide and Actinide Exchanged Zeolites," by D. O. Campbell. *Abstract:* A new reaction has been observed which offers considerable promise for producing useful amounts of the product isotope of a neutron capture reaction in a lanthanide or actinide element. The trivalent target ion is exchanged into Linde X or Linde Y zeolite and, after appropriate heat treatment to fix the ions in the structure, it is irradiated in a nuclear reactor. The (n,γ) product ion, which is one mass unit heavier than the target isotope, is ejected from its exchange site location because of γ recoil energy, and it may be selectively eluted from the zeolite.

The reaction has been demonstrated with several rare earths and the actinide elements americium and curium. Products typically contain some 50% of the neutron capture isotope, accompanied by about 1% of the unreacted target ions. The degree of enrichment is limited primarily by elution of target material which is influenced by several variables, including the particular exchangeable ions present, their relative concentrations, heat treatment, and radiation damage. Inorganic zeolites are remarkably resistant to radiation damage, but the extended irradiations necessary for production of useful amounts of isotopes of interest are in the range in which radiation damage may be limiting.

Study of the water content of the reacting system suggests that hydration of the sorbed rare-earth ion may determine its position in the zeolite crystal structure, which, in turn, controls the isotopic enrichment reaction. Projected irradiation tests with a highly thermalized neutron flux, to test the expectation that this flux will give increased product yields along with decreased radiation damage, have been delayed because the pertinent irradiation facility in the HFIR has not been completed.

8.8 DISTRIBUTION EQUILIBRIA, KINETICS, AND MECHANISMS

Tributyl phosphate (TBP) has been used to extract trivalent actinides and lanthanides from concentrated nitrate solutions for many years; extraction from concentrated chloride solutions is also used in specific applications. We have now found that higher extraction coefficients are obtained for TBP extraction from mixtures of the two types of salts than from either

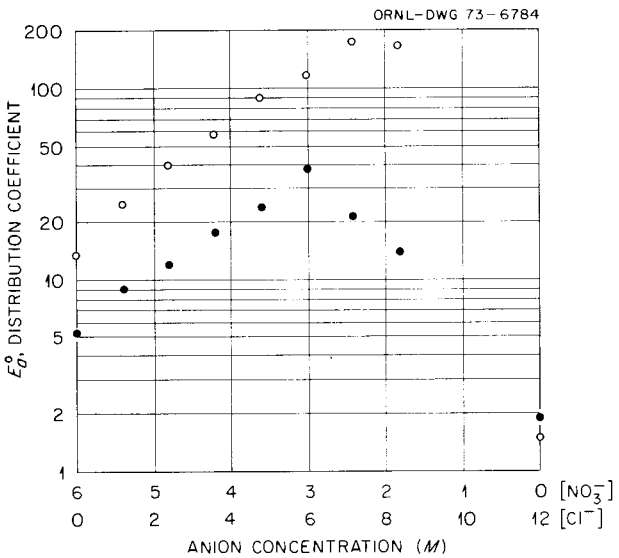

Fig. 8.3. Actinide and lanthanide extractions from nitrate-chloride solutions. Mixtures of 2 *M* (6 *N*) $Al(NO_3)_3$ and 12 *M* LiCl, all containing 0.2 *M* free acid. Extractant, 0.37 *M* TBP in *n*-paraffin; phase ratio, 1:1. ○, europium; ●, americium.

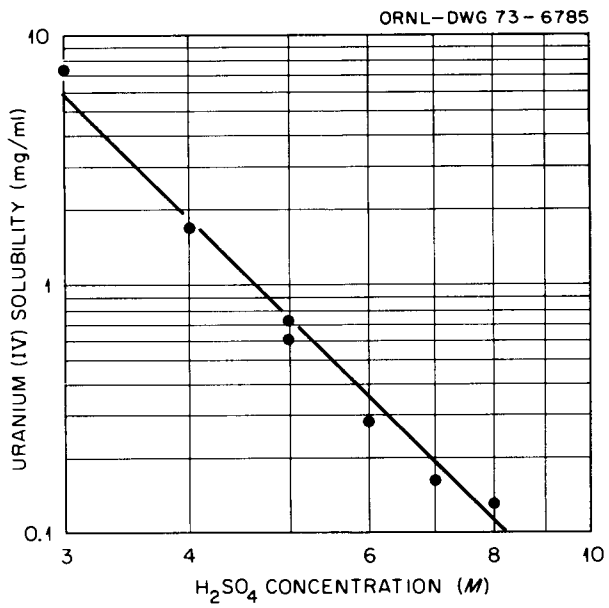

Fig. 8.4. Solubility of U(IV) in sulfuric acid solutions. The line is drawn with slope ≡ −4.

alone. A process has been developed and is being tested for its applicability to the recovery of transplutonium elements (Sect. 5.4). This process utilizes 60% TBP and gives very high extractions, too high to permit accurate measurement of the extraction coefficients. Tests with more dilute TBP (10%, ~0.37 *M*) gave measurable distribution coefficients from a series of mixtures of 2 *M* (6 *N*) $Al(NO_3)_3$ with 12 *M* LiCl (acidity of 0.2 *N* throughout). The results with americium and europium (Fig. 8.3) show that, while the extraction coefficients from the pure chloride solution are only a fraction of those from the pure nitrate solution, the mixtures containing about 75 mole % chloride give extraction coefficients an order of magnitude higher. All of the free acid is extracted as HNO_3. Some $LiNO_3$ is extracted, but no $Al(NO_3)_3$ and very little chloride. At the concentrations used in these tests, the solubility of $AlCl_3$ is slightly exceeded at >80 mole % chloride (gap in Fig. 8.3). At significant concentrations, sodium ion interferes both by lowering the extraction coefficients and by increasing the possibility of NaCl precipitation.

The solubility of uranous sulfate was determined in 3 to 8 *M* H_2SO_4 solutions. Since the crystallization is extremely slow, about one year was allowed to attain equilibrium. The equilibrium solids have not been identified. The results (Fig. 8.4) show a surprisingly sharp decrease of solubility with increasing sulfuric acid concentration. The decrease is more pronounced than would be expected from a simple solubility product relation $[U^{4+}]\,[SO_4^{2-}]^2$ even when complexation[10] and incomplete acid ionization, both of which should tend to decrease the slope, are ignored. One hypothesis to be considered is that the precipitates might be un-ionized sulfatouranium(IV) acids such as $H_2U(SO_4)_3$ or $H_4U(SO_4)_4$. The latter would be stoichiometrically indistinguishable from a bisulfate salt $U(HSO_4)_4$, for which a simple solubility product relation would give a slope of −4 (line in Fig. 8.4). Published information on solubility and complexing in the uranium(IV) sulfate system has been limited to lower sulfate and acid concentrations, so that the present concentration range may involve different species. This is also suggested by the fact that a small absorption peak located near 6760 Å in the spectrum of uranium(IV) sulfate in amine sulfate–hydrocarbon solution is observed only when the uranium is extracted from ≥5 *M* H_2SO_4 solutions.

The absorption spectrum of uranium(IV) in 2 *M* H_2SO_4, free of interference from uranium(VI) or uranium(III), was determined from 4000 to 7000 Å. The molar absorptivity at 6530 Å, the most useful peak for equilibrium and kinetics measurements, is 45.9 liter $mole^{-1}\ cm^{-1}$.

10. L. G. Sillen (ed.), *Stability Constants of Metal-Ion Complexes*, Special Publication No. 17, The Chemical Society, London, 1964.

As a part of a study of the photochemical reduction of uranyl ion in sulfuric acid solution with ethanol as substrate, the rate of reduction was measured with green light, ~4900 Å, from a high-intensity fluorescent lamp. The filtered beam was not geometrically homogeneous; thus only relative kinetics could be determined, without absolute rate constants. The rate of reduction was found to be first order with respect to uranyl concentration, $-(d[UO_2^{2+}]/dt) = 0.009\ [UO_2^{2+}]$ for time expressed in minutes. This rate was not affected by increases in the sulfuric acid concentration from 3 to 6 *M*, ethanol concentration from 0.7 to 1.7 *M*, or initial uranyl concentration from 0.003 to 0.03 *M*. There was a slight decrease at 0.3 *M* UO_2^{2+}, indicative of the beginning of significant self-shielding from the light.

The rate of charge exchange between the U^{4+} produced and the unreacted UO_2^{2+} was measured by irradiating a mixture of UO_2^{2+} (traced with ^{233}U) and U^{4+} in sulfuric acid solution, under argon, in the absence of any organic substrate. For the irradiation, samples of the mixture were exposed, for 2- to 60-sec intervals, to argon-ion laser light at 4765 or 4880 Å (200 mV). After irradiation, the U^{4+} was separated by primary amine sulfate extraction and analyzed for ^{233}U content (by liquid scintillation alpha counting) to determine the extent of charge exchange. Control samples were handled identically, except that they were not irradiated. The charge exchange rate,[11]

$$R = \frac{d[^{233}U^{4+}]}{dt} \Bigg/ \left(\frac{[^{233}UO_2^{2+}]}{[\Sigma UO_2^{2+}]} - \frac{[^{233}U^{4+}]}{[\Sigma U^{4+}]} \right),$$

with time expressed in minutes, was found to be 0.0020 at 4765 Å and 0.0014 at 4880 Å (200 mW), in contrast to 10^{-6} in the dark. The rate of organic-phase charge exchange, when both U^{4+} and UO_2^{2+} are present in an amine sulfate extract, was found qualitatively to be appreciable in the dark and much more rapid under 4000- to 5000-Å illumination. Quantitative rate measurement was precluded by unavoidable simultaneous photochemical reduction, with one or more components of the extractant serving as substrate.

In continued study of the "tagged-ligand transfer" technique,[12] measurements were made to determine the number of chloride ions accompanying a metal ion being extracted by an amine from concentrated lithium chloride solution. Two-phase stirring and quiescent interface were used, with the stirrer speed being maintained at a plateau of transfer rate vs stirrer speed. When $^{36}Cl^-$ tracer was added to preequilibrated aqueous phases under these conditions, the rate of approach to isotopic equilibrium was the same, within experimental reproducibility, at aqueous chloride concentrations from 1 to 9 *M*. However, when HCl and LiCl were being extracted, the rate of isotopic equilibration (corrected for the amounts of $^{36}Cl^-$ directly involved in the mass transfer) was higher, and was different at each aqueous chloride concentration (maximum at ~7 *M* Cl^-). The mechanism for the increased rate might involve local turbulence caused by the mass transfer (Marangoni effect), disruption of a static adsorbed layer of surface-active molecules, or an interface reaction step in the extraction. This question must be resolved before the "tagged ligand" measurements will be useful.

Liquid scintillation alpha counting[13,14] has been marked by a continuing low-level but significant rate of technical improvement and by a very high level of interest and utilization, both within and outside this program. In collaboration with the Environmental Sciences Division,[15] a solvent-extraction–liquid-scintillation method is being developed for the analysis of environmental soil and water samples for very low concentrations of plutonium (and uranium, etc.). A workable procedure has been attained, and a report describing it is in preparation. The abstract follows:

Plutonium Analysis in Environmental Samples: A Combined Solvent Extraction–Liquid Scintillation Method, by D. T. Farrar, W. J. McDowell, and M. R. Billings. *Abstract:* A method for the analytical determination of uranium and/or plutonium by a combined high resolution liquid scintillation–solvent extraction method is presented. With present counter shielding the lower limit of detection of these or other alpha-emitting nuclides is ~0.2 d/min. Alpha counting efficiency is 100%. The separation procedure allows better than 98% recovery of both uranium and plutonium from large amounts of iron and other interferences.

Also, in most cases, uranium may be quantitatively separated from plutonium, even when present in 1000-fold excess, with no loss of plutonium. The counting data are presented as an alpha energy spectrum (resolution, 0.2 to 0.3 MeV FWHM) and thus alpha identification is possible and determination of a specific alpha independent of chemical separation is possible. Possibilities for the application of this general analytical concept to other alpha counting problems are noted. Special problems in the analysis of plutonium and uranium in soil and water samples are discussed.

11. R. H. Betts, "Exchange Reactions in the Uranyl-Uranous System," *Can. J. Res.* **26B**, 702 (1948).

12. *Chem. Technol. Div. Annu. Progr. Rep. Mar. 31, 1972,* ORNL-4794, p. 58.

13. Ibid., p. 60.

14. W. J. McDowell and L. C. Henley, *An Evaluation of the Possibility of Detecting and Identifying Alpha Emitters in Low-Count-Rate Samples Using Some New Liquid Scintillation Counting Techniques,* ORNL-TM-3676 (March 1972).

15. *Ecological Sciences Div. Annu. Progr. Rep. Sept. 30, 1972,* ORNL-4848, p. 7.

At least one problem remains to be resolved in the application of this method; however, this appears to be a more serious (and previously unrecognized) problem for the previously available methods than it is for the liquid scintillation method. A fraction of the uranium in actual samples appears to be in a special chemical form that resists separation from the plutonium. This handicaps but does not invalidate the liquid scintillation analysis, because the plutonium can still be resolved from the uranium in the alpha energy spectrum. If the same thing occurs in the presently used ion-exchange–solid-scintillator procedures, the residual uranium may be counted as plutonium. On the other hand, direct comparisons show that the current ion exchange procedure may not recover all of the plutonium from soil and water samples, perhaps for reasons analogous to the difficulty in uranium separation.

8.9 AGGREGATION AND ACTIVITY COEFFICIENTS IN SOLVENT PHASES

Isopiestic measurements of the osmotic coefficients of *n*-hexane solutions of 4-*sec*-butyl-2-(α-methylbenzyl)phenol (BAMBP) were extended from the previous maximum of 2.8 *m* (ref. 16) to 8.8 *m*. Computer analysis of the results indicated that a tetramer is important, in addition to the dimer and pentamer previously recognized. A report of these results, together with the dielectric and viscosimetric studies of this system,[16] has been accepted for publication in the *Journal of Inorganic and Nuclear Chemistry*. The abstract follows:

"Investigation of Intermolecular Association of 4-*sec*-Butyl-2-(α-methylbenzyl)phenol (BAMBP) by Use of Dielectric and Isopiestic Measurements," by J. W. Roddy and C. F. Coleman. *Abstract:* The association of the cesium extractant 4-*sec*-butyl-2-(α-methylbenzyl)phenol (BAMBP) in *n*-hexane was investigated by means of dielectric constant, density, refractive index, and viscosity measurements at concentrations up to 6.85 *m* and isopiestic measurements up to 8.8 *m*, 25°C. The results indicate the formation of definite aggregates whose resultant dipole moments show little interaction. The osmotic data, summarized by an empirical equation for the osmotic coefficient, $\phi = 0.28304 - 0.002075m + 0.20645/(m + 0.2880)$, are well matched by an aggregation model involving monomer-dimer-tetramer-pentamer, with formation concentration quotients log $Q_{1,2} = 0.46$, log $Q_{1,4} = 1.89$, log $Q_{1,5} = 2.01$. The osmotic data are alternatively fitted (ignoring the aggregation) by stoichiometric activity coefficients calculated from the osmotic coefficients, $\log \gamma = 0.08966/(m + 0.2880) - 0.71696 \log (m + 0.2880) - 0.00180m - 0.6990$.

Extension of the isopiestic measurements to a BAMBP stoichiometric molality of 8.8 (osmotic particle molality, ~2.5) was possible because of "calibration" of tri-*n*-octylamine (TOA) as a standard reference solute in *n*-hexane.[16] Its osmotic behavior, and also that of benzophenone (BZP) in carbon tetrachloride,[17] may be summarized by the following constants in the empirical equation for the osmotic coefficient:

$$\phi = A + Bm + C(1 - A)/(m + C)$$

	A	B	C	σ of fitting	Range (m)
TOA/C_6H_{14}	−0.3455	0.06854	2.0944	0.0067	0–2.4
BZP/CCl_4	0.5637	−0.0165	0.4591	0.0139	0–6.1

A report of these "calibrations" has been accepted for publication in the *Journal of Inorganic and Nuclear Chemistry*.

16. *Chem. Technol. Div. Annu. Progr. Rep. Mar. 31, 1972*, ORNL-4794, p. 62.

17. *Chem. Technol. Div. Annu. Progr. Rep. May 31, 1970*, ORNL-4572, p. 195.

9. Chemical Applications of Nuclear Explosives

The purpose of this program is to conduct research and development in selected areas of the Plowshare Program. During the past year, studies were made of (1) the disposal of tritiated water solutions that are generated in gas stimulation applications and (2) the behavior of radionuclides in the recovery of oil from oil shale.

9.1 DISPOSAL OF TRITIATED WATER

Very large volumes of dilute tritiated water will be produced from natural gas fields that are stimulated with nuclear explosives. The water is released from the pores of the fractured rock and contaminated with tritium formed in the nuclear detonation. It is removed from the chimney as tritiated water vapor in the natural gas that is subsequently produced, and is removed from this gas at the well head. Assuming nuclear stimulation of 240 wells, the Rio Blanco field in Colorado could produce an estimated 1 billion gal of water, with a tritium activity of about 525 μCi/gal, at a maximum production rate of about 460,000 gal/day. Proper disposal of the tritiated water is essential to the success of nuclear stimulation in natural gas recovery.

Our studies indicate that the best disposal methods are injection into deep wells, evaporation into stacks, and evaporation from ponds. At this point, none of the three is clearly superior to the others; each has potential advantages and disadvantages that should be evaluated in actual tests. We have recommended[1] that all three methods be evaluated in conjunction with the production testing of the first Rio Blanco well.

Injection into the formations from which it originally came would isolate the tritiated water from the biosphere. We estimate that disposal could cost from \$0.01 to \$0.10/gal, depending on the injection rates and storage capacities of the injection wells. While disposal can possibly be made at pressures below those required to fracture the disposal formations, higher injection rates and storage capacities can be achieved by injecting at above-fracturing pressures or by using nuclear chimneys as disposal wells.

If the tritiated water is dispersed by either of the evaporative methods from the site of the first Rio Blanco well, the estimated radiation dose potentials are less than 1% of the background rate. The estimated dose rates are more than 100 times lower if the tritiated water is evaporated from a ridge above the field. Doses to personnel working near an evaporation pond would be much higher, but not excessive. Estimated disposal costs are \$0.04/gal for stack evaporation and \$0.02/gal for pond evaporation. Dispersion of tritiated water by both of the evaporative methods should be measured to verify the estimated low radiation dose rates.

Other disposal methods that were evaluated appear less favorable. Long-term tank storage is technically feasible and would not release tritium to the biosphere, but its estimated cost of \$0.10/gal is relatively high. The flow rates of area streams are too low to permit direct discharge of the tritiated water. While larger streams about 30 miles away have adequate flow rates, the capacity of the atmosphere for dispersing the tritiated water is much greater than that of the waterways, and one of the evaporative methods is preferable if the tritiated water is released to the biosphere. Shipment by truck for off-site disposal is too expensive. Decomposition of the water by electrolysis or other methods, and subsequent release of tritiated hydrogen gas to the atmosphere, has little advantage over evaporating the tritiated water and is considerably more expensive. Disposal methods based on isotopic separation appear to be out of the range of economic feasibility.

9.2 RECOVERY OF OIL FROM OIL SHALE

The developing energy crisis in the United States has generated a renewal of interest in the possibilities of

1. W. D. Arnold, R. Salmon, K. H. Lin, and W. de Laguna, *Preliminary Evaluation of Methods for the Disposal of Tritiated Water from Nuclearly Stimulated Natural Gas Wells,* ORNL-TM-4024 (April 1973).

recovering oil from shales. As a result of this, we are reactivating our studies of radionuclide behavior in the recovery of oil from nuclearly broken oil shale.

Tritium behavior is being studied in a new bench-scale retort. A 1500-g charge of 0.2- to 1-in. shale pieces makes a 30-in. bed in the 2-in.-ID retort. The shale is contaminated with tritium by heating for 30 to 50 days at 85°C in a tightly sealed container with 0.25 ml of water containing 100 μCi of tritiated water. Oil is produced by heating the outside of the glass column while passing a stream of nitrogen and carbon dioxide through the shale bed. The electric heater is lowered down the column to generate a moving retorting front.

In the initial run, the tritium concentration in the five oil fractions collected was essentially uniform at 0.13 to 0.14 μCi/ml. The oil contained about 30% of the tritium that was recovered in the retort products; the water contained about 50%; and the off-gas and depleted shale each contained about 10%. Oil retorted from clean shale did not become contaminated as it flowed across contaminated shale. When a column containing 750 g of clean shale above 750 g of contaminated shale was retorted, the oil fractions from the clean shale contained 0.002 μCi of tritium per milliliter and those from the contaminated shale contained 0.21 μCi/ml. Some cross-contamination occurred when the contaminated shale was retorted above clean shale, however. The oil from the contaminated shale again contained 0.21 μCi of tritium per milliliter, while the oil from the clean shale immediately below the contaminated shale contained 0.054 μCi/ml and the oil from the shale at the bottom of the retort contained 0.023 μCi/ml.

In the latter run, the furnace was lowered down the column three times, first at a shale temperature of 150°C and then at 280°C and 360°C. A total of 37 μCi of tritiated water but essentially no oil was removed from the shale at 150°C and 280°C; however, this did not decrease the average tritium concentration of the total oil produced in the run. The average tritium concentration of the oil and the tritium distribution in the retort products were almost the same as obtained in the first run. These results do not agree with those of smaller-scale tests made previously,[2] in which the oil contamination was substantially reduced by removing tritiated water from the shale before retorting. It is possible that the heating time was insufficient to remove the tritiated water from the pores and fractures inside the shale pieces. The furnace has been lowered at the rate of 6 in./hr in all of the tests made thus far. Longer heating times are being used in the tests that are currently in progress.

The degree of contamination of the oil with tritium that we have observed does not appear to be a limiting problem with respect to recovery of oil from shale with nuclear explosives. The tritium/shale ratio in these experiments is higher by a factor of about 50 than would result if a low-tritium-yield device were used to fracture the shale formation. If a corresponding reduction in the tritium content of the oil is assumed, we estimate that use of hydrocarbon fuels derived from the oil in a high-pollution area (Los Angeles) would result in a dose to the population of <0.5 mrem/year.

2. *Chem. Technol. Div. Annu. Progr. Rep. May 31, 1969,* ORNL-4422, p. 272.

10. Biochemical Technology

MACROMOLECULAR SEPARATIONS

10.1 SEPARATION OF OLIGONUCLEOTIDES

Separation of oligonucleotides is a necessary step when determining the primary sequence of RNAs. Comparison of oligonucleotide patterns ("fingerprints") pinpoints areas of similarities and differences, as well as areas affected by specific biological or chemical modifications.

Reversed-phase chromatography has previously been applied to the separation of transfer RNAs and ribosomal RNAs.[1] In adapting this technique to the separation of oligonucleotides,[2–4] we have studied the effects of flow rate, column size, sample size, temperature, and eluent composition on the chromatographic behavior of oligonucleotides typically obtained by enzymatic digestion of tRNAs. Conditions were optimized to give good resolution in 3 to 6 hr compared with several days required by conventional methods.

Samples containing 1.0 to 50 A_{260} units can be resolved with a 0.63-cm-diam by 100-cm-long column using gradient elution with 200 to 600 ml of eluent. Good resolution was obtained at flow rates ranging from 0.5 to 1.5 ml/min and at selected temperatures of 25, 37, and 55°C.

This column can be used with sodium chloride, ammonium acetate, or ammonium formate eluents having pH values ranging from 2.6 to 9.0. However, best results were obtained with ammonium acetate solution, pH 4.4. This acetate eluent gave good resolution throughout the elution range and allowed the separated components to be recovered directly by lyophilization, thereby eliminating a desalting step prior to characterization of the fractions. While the presence of urea in the eluent is compatible with this column, it is not a prerequisite for obtaining good resolution of oligonucleotides (as is the case with DEAE-cellulose columns).

Chromatograms of mixtures of characterized oligonucleotides, separated by DEAE-cellulose chromatography of enzymatic digests of $tRNA^{Glu}$ (*E. coli*) and obtained from Dr. S. H. Chang[5] of Louisiana State University, are shown in Figs. 10.1 and 10.2. The

1. *Chem. Technol. Div. Annu. Progr. Rep. Mar. 31, 1972,* ORNL-4794, pp. 65–67.
2. B. Z. Egan, *Biochem. Biophys. Acta* **299,** 245 (1973).
3. B. Z. Egan, *Fed. Proc.* **32,** 586 (1973).
4. B. Z. Egan and A. D. Kelmers, *Methods in Enzymology* (in press).
5. K. O. Munninger and S. H. Chang, *Biochem. Biophys. Res. Commun.* **46,** 1837 (1972).

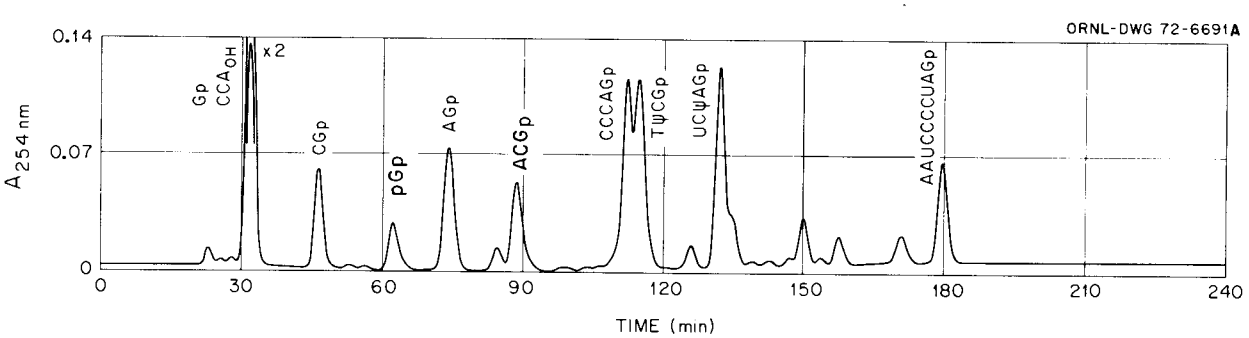

Fig. 10.1. Chromatogram of a mixture of selected, characterized oligonucleotides from a ribonuclease T_1 digest of $tRNA^{Glu}$. Column dimensions, 0.63 cm diam × 93 cm long; temperature, 37°C; gradient, 300 ml of 0.5–3.0 *M* ammonium acetate–acetic acid, pH 4.4.

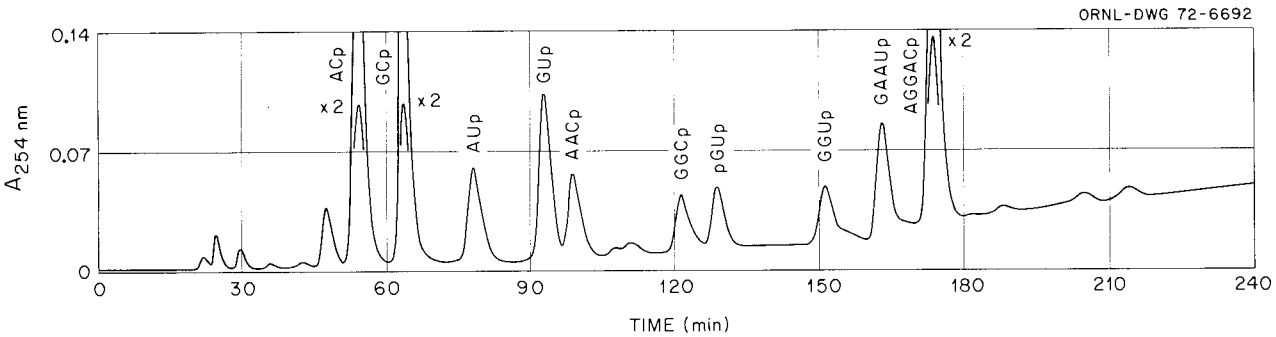

Fig. 10.2. Chromatogram of a mixture of selected, characterized oligonucleotides from a pancreatic ribonuclease digest of tRNA^{Glu}. Column dimensions, 0.63 cm diam × 98 cm long; temperature, 37°C; gradient, 250 ml of 0.5–2.5 *M* ammonium acetate–acetic acid, pH 4.4.

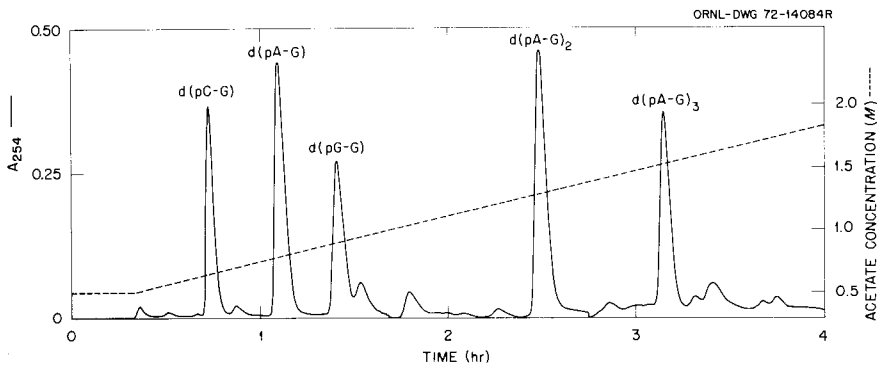

Fig. 10.3. Reversed-phase chromatogram from a mixture of oligodeoxynucleotides. Column dimensions, 0.63 cm diam × 98 cm long; temperature, 37°C.

method is also useful for separating oligodeoxynucleotides (Fig. 10.3).

As compared with conventional methods, reversed-phase chromatographic separation of oligonucleotides has the advantages of speed, ease of recovery of fractions, and sample versatility.

10.2 SEQUENCE OF THREE FORMYLMETHIONINE TRANSFER RNAs

The primary structure of the protein initiator tRNA, tRNA^{fMet} (*E. coli*), has been reported.[6] However, using reversed-phase chromatography, we were able to separate[7] three chromatographically different tRNAs corresponding biologically to tRNA^{fMet}. These tRNAs^{fMet} have been designated tRNA$_A^{fMet}$, tRNA$_B^{fMet}$, and tRNA$_3^{fMet}$. It then became important to determine the structural relationships among these tRNAs in terms of the published structure.

We have used the technique described above (Sect. 10.1) for separating oligonucleotides obtained from ribonuclease T_1 and pancreatic ribonuclease digests of these three tRNAs^{fMet}. Figure 10.4 compares the pancreatic ribonuclease digests, and Fig. 10.5 shows chromatograms obtained from the ribonuclease T_1 digests. The peaks were identified by base (nucleoside) composition, spectra, and comparison with the published structure. In addition, larger oligonucleotides were rechromatographed following further enzymatic digestion. The chromatograms of the three tRNAs^{fMet} are very similar, with small, but significant, dissimilarities. Table 10.1 lists the observed dissimilarities in terms of the oligonucleotides that were different, or that were conspicuous by their presence or absence.

6. S. K. Dube, K. A. Marcker, B. F. C. Clark, and S. Cory, *Nature* **218**, 232 (1968).

7. H. O. Weeren, A. D. Ryon, and A. D. Kelmers, *Biotechnol. Bioeng.* **12**, 617 (1972).

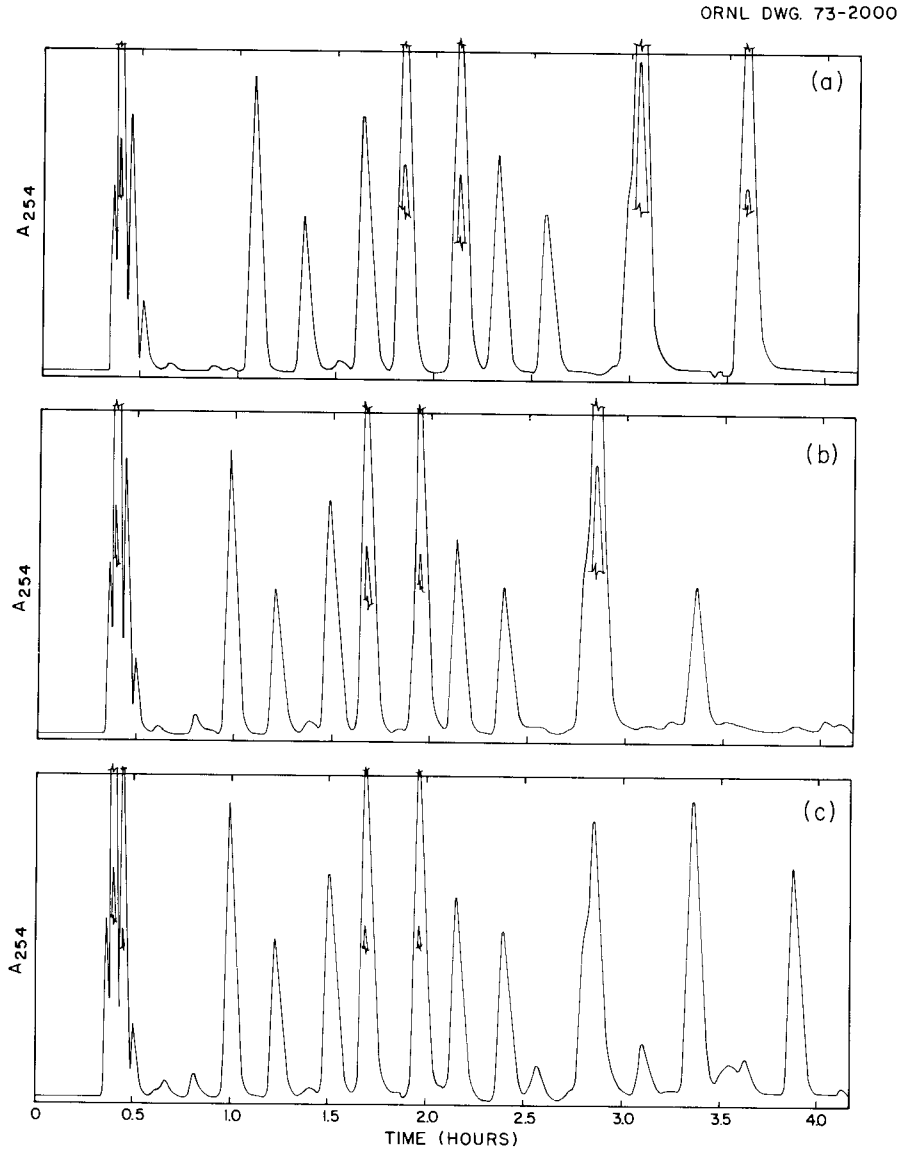

Fig. 10.4. Comparison of pancreatic ribonuclease digests of (*a*) $tRNA_A^{fMet}$, (*b*) $tRNA_B^{fMet}$, and (*c*) $tRNA_3^{fMet}$.

The results can be summarized as follows: (1) $tRNA_A^{fMet}$ appears to correspond to the published sequence for $tRNA^{fMet}$; (2) $tRNA_B^{fMet}$ differs from $tRNA_A^{fMet}$ in that the 4-thiouridine in nucleotide position 8 (from the 5′-terminus) has interacted with the cytidine in position 13 to form a cross-linked product;[8] and (3) $tRNA_3^{fMet}$ differs from $tRNA_A^{fMet}$ in that 7-methylguanosine in position 47 has been replaced by adenosine. The biological significance of these findings is not yet fully understood.

8. F. Berthelot, F. Gros, and A. Favre, *Eur. J. Biochem.* **29**, 343 (1972).

Table 10.1. Comparison of oligonucleotides relating three $tRNAs^{fMet}$

A	B	3
	Pancreatic ribonuclease fragments	
GAAGm^{7}GUp	GAAGm^{7}GUp	GAAGAUp
GGAGCp		GGAGCp
	Ribonuclease T_1 fragments	
s^{4}UGp		s^{4}UGp
CAGp		CAGp
m^{7}GUCGp	m^{7}GUCGp	AUCGp
	CAGp U*Gp	

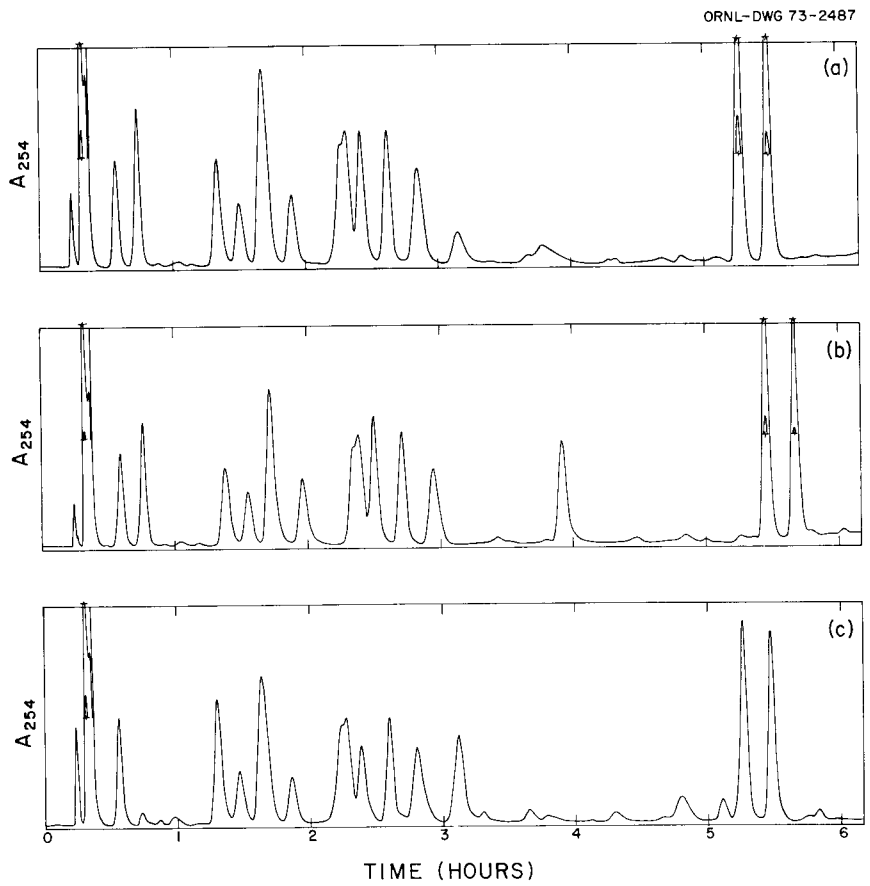

Fig. 10.5. Comparison of ribonuclease T_1 digests of (*a*) $tRNA_A^{fMet}$, (*b*) $tRNA_B^{fMet}$, and (*c*) $tRNA_3^{fMet}$.

10.3 ISOLATION OF COLONY STIMULATING FACTOR

Colony stimulating factor (CSF) appears to function as a humoral regulator which stimulates the development of stem cells into granulocytes and/or macrophages, immature forms of white cells. In this respect CSF is analogous to erythropoietin, a humoral regulator required to stimulate the development of red blood cells. Since white cells represent one of the primary defenses to foreign bodies, CSF is directly related to the response to disease. Some evidence also suggests that abnormal levels of CSF may be associated with leukemia. Thus the medical relevance of research involving CSF is high. This project is being carried out in cooperation with Dr. E. R. Stanley of the Ontario Cancer Institute.

An in vitro cell culture assay has been set up for the analysis of CSF. Mice bone marrow cells, when nourished in an agar culture, form colonies of white cells in the presence of CSF. A sigmoidal dose-response relationship exists between the CSF concentration and the number of the colonies developed from a standard number of bone marrow cells. The clusters are counted with a stereoscopic microscope, and the concentration of CSF is calculated by comparison with the number of colonies grown from a standard concentration of CSF.

Colony stimulating activity is detectable in the serum of both mice and humans. In addition, it has been found that human urine contains significant quantities of CSF. In order to obtain CSF for flowsheet development, five staff members have been providing 24-hr urine samples. The urine specimens are collected at room temperature, pooled, and then stored at 4°C in 0.02% NaN_3 until used for processing.

A preliminary procedure for the initial steps in the purification of CSF has been reported by Dr. Stanley. Several changes have been made to adapt this procedure to a pilot-plant-size operation. The flowsheet developed during the past year is shown through step II in Fig. 10.6. Dialysis of large volumes of solution has been achieved very successfully with a Bio-Fiber 50 Mini-

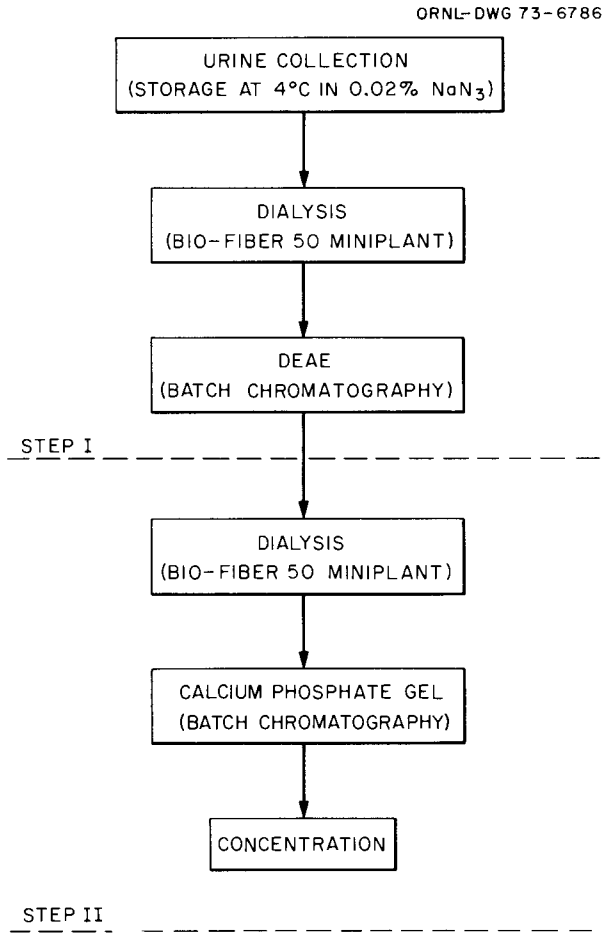

Fig. 10.6. Flowsheet for CSF purification through step II.

plant. The conductivity of 1 liter of urine can be reduced by 50% in 8 min. At this rate, approximately 40 liters of urine can be dialyzed overnight for processing with DEAE the next morning.

After step II, albumin is one of the major contaminants left in the products. An elegant method for the removal of the albumin makes use of immunoabsorbent techniques. Crude human serum albumin is injected into a rabbit, and the rabbit builds antibodies in its serum against this antigen. These crude human serum albumin antibodies are isolated in the IgG fraction of the rabbit serum and are coupled to Sepharose 4B using cyanogen bromide. Results of preliminary tests just concluded indicate a 40 to 60% removal of contaminants per pass through the column. Recycle of the CSF through the column will remove additional contaminant. The procedure appears promising and will be further evaluated for inclusion as step III in the flowsheet procedure.

10.4 PURIFICATION OF ERYTHROPOIETIN

The long-term goals of this project are the development of practical purification methods for the isolation of erythropoietin (Epo) and the preparation of milligram quantities for evaluation in clinical testing for the relief of anemia due to renal failure. The preliminary experiments reported last year[9] described the recovery of step I Epo at increases of 10- to 40-fold in the Epo concentration. This project is being carried out in cooperation with Dr. E. Goldwasser, Argonne Cancer Research Hospital, and samples of partially purified Epo have been shipped to him for evaluation.

The methods for the phenylhydrazine treatment of the sheep and the recovery of the blood (the source of Epo) were described previously.[9] Technical improvements in the method of recovering the blood have reduced the manpower and time required for this step. Approximately 30 liters of plasma can be recovered from 10 sheep in only 3 hr. During this report period, a total of 113 sheep was treated and 332 liters of blood recovered, which contained 1,148,500 units of Epo as determined by the exhypoxic polycythemic mouse assay.

Process development activities have been carried out both to recover Epo from the sheep plasma and to evaluate, on a small scale, several new processing steps. A provisional processing procedure consisting of step I, DEAE-cellulose column chromatography, and step II, carboxymethylcellulose chromatography, was established. As shown in Table 10.2, an 86-fold purification was achieved; however, a substantial loss of Epo was incurred.

Alternative processing steps are currently being evaluated. Since relatively pure Epo represents about a 1,000,000-fold purification, it is essential to achieve a high purification factor and low loss in each step. The steps being tested include: (1) phenol extraction, (2) ethanol–lithium chloride precipitation, (3) ammonium sulfate precipitation, and (4) subtractive antibody

9. *Chem. Technol. Div. Annu. Progr. Rep. Mar. 31, 1972,* ORNL-4794, p. 70.

Table 10.2. Results of large-scale erythropoietin purification

Step	Total units of Epo	Activity (units per A_{280})	Recovery (%)	Purification factor
Blood	1,148,500	0.07		
Step I	690,000	2.0	60	29-fold
Step II	344,000	6.0	30	86-fold

affinity chromatography. Encouraging preliminary results have been obtained, and a modified flowsheet will be evaluated in the coming year.

HIGH-RESOLUTION ANALYTICAL SYSTEMS

It is apparent that in the future most diseases will be studied, diagnosed, and treated on a molecular level. Many of the hundreds of molecular constituents of body fluids can be used as indicators of body function or malfunction. However, to take advantage of this approach in the clinical laboratory, it will be necessary to have automated, high-resolution analytical systems to determine large numbers of the molecular constituents in body fluids. Such systems will include a means for separating complex physiologic mixtures into their individual molecular constituents and a monitoring or detection method for quantitating the separated constituents.

A whole family of such high-resolution analytical systems based on liquid chromatography or electrophoresis is being developed. Several analyzers have advanced through the prototype phase and are now being evaluated at other laboratories. Many interesting and useful experimental results are being obtained with these analytical systems.

10.5 ENGINEERING DEVELOPMENT

Eighteen prototype systems of the UV- and carbohydrate analyzers are now in use, or are being built for use, in other laboratories. The first prototype featuring cerate oxidimetry for detection is being planned for evaluation at another laboratory.

The primary developmental efforts during this report period have been directed toward upgrading and optimizing the operating conditions for previously developed high-resolution analytical systems and toward making preliminary investigations of several new analytical concepts.

Sequential Separation Using Microreticular and Pellicular Resin

The high-resolution separation of metabolites in physiologic fluids can be achieved by high-pressure ion exchange chromatographic systems that use very-small-diameter microreticular resins; however, the resin phase contributes to diffusional resistance that results in a relatively slow separation process. Conversely, the recently developed pellicular resins, which have only an active outer film, achieve relatively rapid separation but at the expense of a severe reduction in capacity that makes high-resolution separations of complex mixtures very difficult.

An interesting concept is to combine these two types of ion exchange resins by using sequential columns. The first column, containing microreticular resin, would contribute the necessary capacity for a preliminary separation. Subsequently, the second column, containing pellicular resin, would provide a rapid, final separation. Figure 10.7 shows chromatograms obtained for both reference and pathologic urine by using a 0.22-cm-diam by 50-cm-long column of microeticular resin coupled to a 0.22-cm-diam by 150-cm-long column of pellicular resin. A chromatogram obtained for reference urine with a system consisting of a single 50-cm column of microreticular resin is also included for comparison. Careful examination of the two chromatograms at the top of the figure reveals that improved resolution of the early-eluting constituents is achieved by using the coupled system. Based on the time shown by experimental runs, as indicated in the figure, the 24 hr required for usual analytical runs can be reduced to about 8 hr.[10]

Miniature Flow Fluorometer

Since several column monitoring systems require the use of a sensitive flow fluorometer,[11–13] a miniature device of this type is being developed. The present version consists of a fluorometer body and a chassis for electronic components and circuits. The fluorometer body is a machined aluminum block (Fig. 10.8) which contains a low-pressure mercury lamp, an appropriate excitation filter, a quartz flow cell, an appropriate blocking filter, a photomultiplier assembly, and a photoconductor which compensates for changes in lamp intensity.[14] The mounting accommodations for

10. C. D. Scott and N. E. Lee, "Use of Sequential Columns of Microreticular and Pellicular Ion Exchange Resins in the High-Resolution Separation of Complex Biochemical Mixtures," *J. Chromatogr.* (in press).

11. S. Katz and W. W. Pitt, "A New Versatile and Sensitive Monitoring System for Liquid Chromatography: Cerate Oxidation and Fluorescence Measurement," *Anal. Lett.* **5**, 177 (1972).

12. S. Katz and L. H. Thacker, "A New Sensitive Ultraviolet Detection System for Carbohydrates Eluted During Column Chromatography," *J. Chromatogr.* **64**, 247 (1972).

13. *Chem. Technol. Div. Annu. Progr. Rep. Mar. 31, 1972,* ORNL-4794, p. 71.

14. L. H. Thacker, "A Miniature Flow Fluorometer for Liquid Chromatography," *J. Chromatogr.* **73**, 117 (1973).

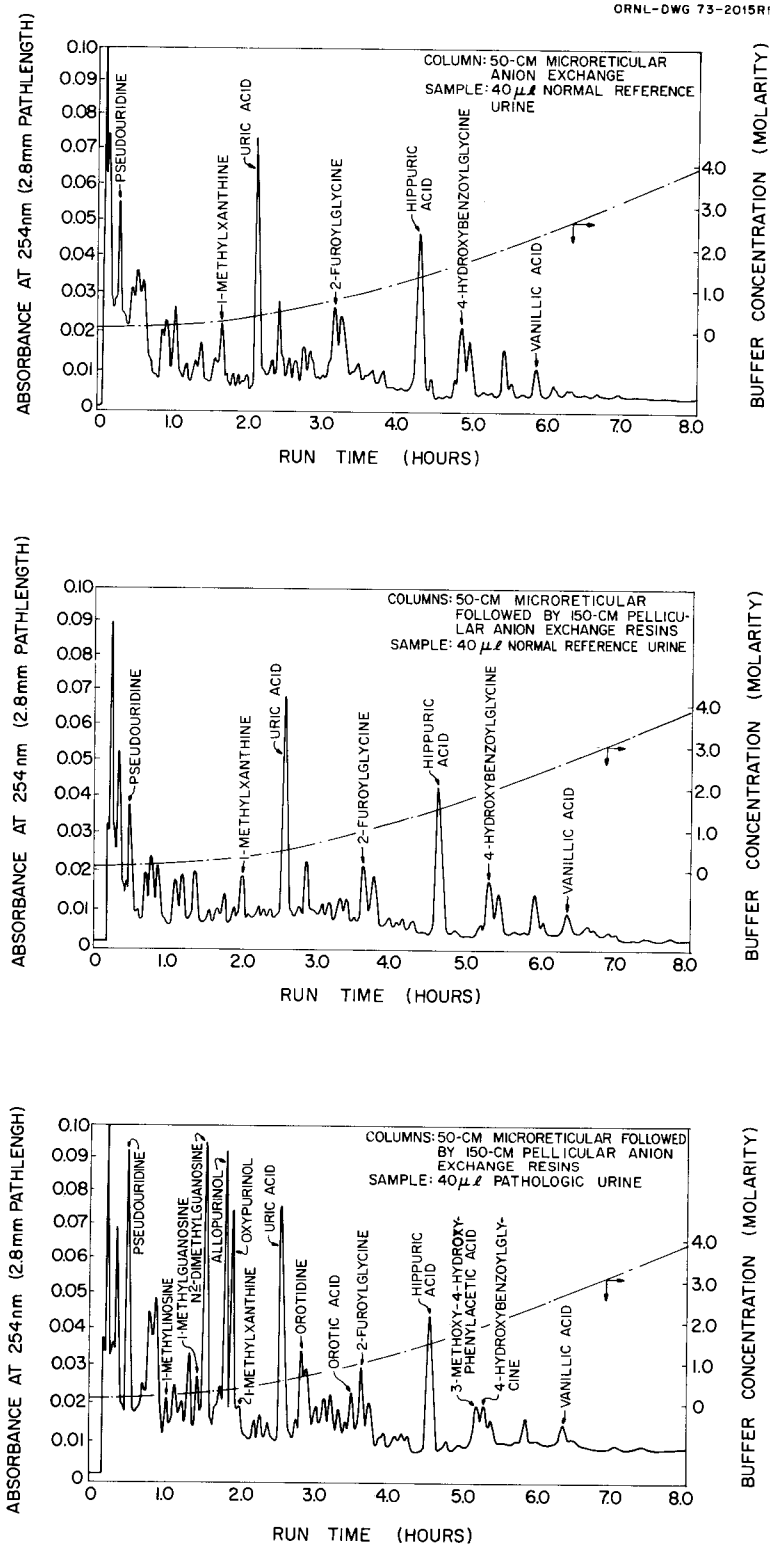

Fig. 10.7. Comparison of the separation of the uv-absorbing constituents of urine on a short column of microreticular anion exchange resin (Aminex A-27, 12 to 15 μ diam) and on sequential columns of microreticular and pellicular (Pellionex AS) resins. Eluent, acetate buffer (pH 4.4); average flow rate, 12.0 ml/hr; temperature, increasing from ambient to 60°C and 40°C, respectively, for the two columns.

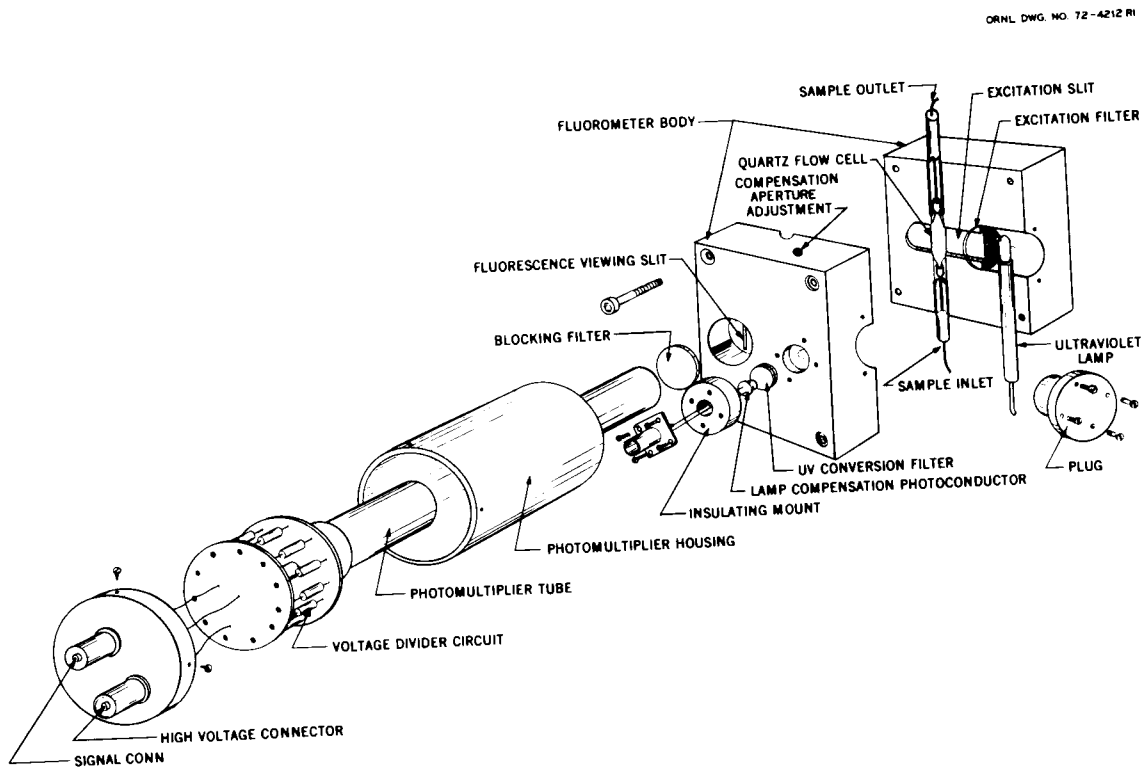

Fig. 10.8. Design of a miniature flow fluorometer for liquid chromatography.

all of these components, along with the required optical apertures, are machined into the aluminum block; thus no problems are encountered in establishing or maintaining proper alignment of components. The fluorescence from the sample is observed at a right angle to the excitation radiation.

The excitation filter can be chosen to select any one, or a group, of the available spectral lines for exciting the sample. The instrument is presently being operated with a 254-nm interference filter since it is being used as the detector for the cerium oxidimetric system. [The excitation maximum for cerium(III) is at 260 nm.]

The flow cell consists of a length of 4-mm-OD by 0.5-mm-wall quartz tubing 2.5 cm long, with ends pulled down to 1.6 mm OD. The blocking filter, which defines the band of wavelengths passed to the photomultiplier, can, like the excitation filter, be selected from a wide range of choices. The photoconductor senses the 254-nm emission of the mercury lamp through a uv conversion filter. This detector adjusts the gain of the electronic circuit to compensate for variations in lamp intensity. An aperture-adjusting screw determines the amount of light falling on the photoconductor; the aperture screw is adjusted initially so that the photoconductor resistance is 1 MΩ.

Detection of Aromatic Acids Using Cerate Oxidimetry

The use of multiple detectors for a single chromatographic system is attractive from the standpoint of analyzing complex physiologic body fluids. For example, the development of the cerium oxidimetric detector has expanded the detection capability and sensitivity of the UV-Analyzer[11,13] since this detection system was designed to be an add-on component.

The cerium oxidimetric detection system includes a means for metering the reagent and mixing it with the column eluate and a means for monitoring the resulting stream (i.e., a flow fluorometer that is capable of providing sensitivities of the order of 0.1 μg for many aromatic acids). Oxidizable compounds are detected by the fluorescence of cerium(III) that results from the reduction of cerium(IV) in the reagent.

Important objectives in the preparation of the cerium(IV) reagent solution are to minimize self-absorption while providing an adequate excess of reagent, to avoid precipitation of cerium salts after the reagent is mixed with the column effluent, and to prevent the generation of cerium(III) except as a consequence of oxidation of a compound in the column

eluate. To satisfy these considerations, Ce(IV) and sulfuric acid concentrations of 2.5×10^{-4} *M* and 3 *M*, respectively, were utilized in the reagent solution. The 2.5-fold increase in cerium(IV) concentration, compared with that used in our previous work,[13] eliminated undesirable flattening of chromatographic peak tops in cases where the quantity of eluted compound was very large. A sulfuric acid concentration of 3 *M* was selected since lower concentrations led to the deposition of cerium salts in the capillary tubing, causing flow blockage.

A modified anion exchange system comparable to the UV-Analyzer with uv and cerate oxidative monitors in series was evaluated using synthetic mixtures of aromatic acids. A 0.22-cm-diam by 150-cm-long column containing Aminex A-27 anion exchange resin was used with an eluent flow rate of 7 cm^3/hr. The cerium(IV) reagent flow was adjusted to 11.5 cm^3/hr, the fluorescence signal response sensitivity was set to provide 0.6 of full-scale deflection for a solution of 2×10^{-5} *M* cerium(III), and a 270-μl sample was used.

The chromatogram for a sample containing several reference aromatic acids at 1- or 2-μg levels (Fig. 10.9) shows good resolution and sensitivity. A chromatogram of a urine sample from a normal individual exhibits a number of aromatic acids or oxidizable compounds, many of which are not detected by only monitoring uv absorption. Operating conditions used in obtaining these chromatograms were similar to those for the normal UV-Analyzer.[13]

Response of the monitor to cerium(III) fluorescence was evaluated for three aromatic acids, over the range of 1 to 20 mg, and was found to be generally linear (Fig. 10.10).

Separation and Detection of Polyamines

Various methods have been proposed for the early diagnosis of malignancy. Those which have received increased attention during the past few years are based on the determination of polyamines in physiological fluids. Recent experiments suggest that patients with active cancer may have elevated levels of these compounds in body fluids.[15–21] The polyamines of importance generally include the compounds listed in Table 10.3. An ion exchange separation procedure utilizing a more sensitive fluorometric method of detection is being developed for analysis of the polyamines.

Table 10.3. Important physiological polyamines and their structures

Compound	Structure
1,3-Diaminopropane	$H_2NCH_2CH_2CH_2NH_2$
Putrescine	$H_2NCH_2CH_2CH_2CH_2NH_2$
Cadaverine	$H_2NCH_2CH_2CH_2CH_2CH_2NH_2$
Spermidine	$H_2N(CH_2)_3NH(CH_2)_4NH_2$
Spermine	$H_2N(CH_2)_3NH(CH_2)_4NH(CH_2)_3NH_2$
2,2′-Dithio-bis-(ethylamine)	$H_2NCH_2CH_2SSCH_2CH_2NH_2$

The column monitoring system is based on chemical development of the separated solutes in the eluate with fluorescamine, a new reagent which provides a very sensitive fluorescence detection of amino acids, peptides, and proteins.[22] Two miniature jet mixers are used to mix the column eluate with an equal amount of phosphate buffer, and subsequently with the same amount of the reagent dissolved in acetone. The fluorescence of this stream is then monitored with a flow fluorometer using a broad-band excitation peaking at 360 nm and a monitoring emission above 400 nm. With this system, it is anticipated that the sensitivity to primary amines in chromatographed body fluid samples will be increased severalfold above that obtainable with the common ninhydrin reaction system.

One of the requirements for the separation procedure is that it must be compatible with the detection system. For example, production of the fluorophor from the fluorescamine appears to occur at an optimum pH of 9, although higher pH values can also be used. Second, since the column effluent is mixed with a flowing acetone solution of the reagent, the concentration of

15. S. H. Snyder and D. H. Russell, "Polyamine Synthesis in Rapidly Growing Tissues," *Fed. Proc.* **29**, 1575 (1970).
16. D. H. Russell, "Increased Polyamine Concentrations in Urine of Human Cancer Patients," *Nature New Biol.* **233**, 144 (1971).
17. D. H. Russell, C. C. Levy, S. C. Schimpff, and I. A. Hawk, "Urinary Polyamines in Cancer Patients," *Cancer Res.* **31**, 1555 (1971).
18. D. H. Russell and C. C. Levy, "Polyamine Accumulation and Biosynthesis in a Mouse L1210 Leukemia," *Cancer Res.* **31**, 248 (1971).
19. A. Raina and J. Idnne, "Polyamines and the Accumulation of RNA in Mammalian Systems," *Fed. Proc.* **29**, 1568 (1970).
20. U. Bachrach and E. Robinson, "Occurrence of Spermine in Sera of Cancer Bearing Individuals," *Israel J. Med. Sci.* **1**, 247 (1965).
21. U. Bachrach, A. Bekierkunst, and S. Abzug, "The Occurrence of Putrescine, Spermidine, and Spermine in Ehrlich Ascites Cells," *Israel J. Med. Sci.* 3, 474 (1967).
22. S. Udenfriend, S. Stein, P. Bohlen, W. Dairman, W. Leimgruber, and M. Weigele, "Fluorescamine: A Reagent for Assay of Amino Acids, Peptides, Proteins, and Primary Amines in the Picomole Range," *Science* **178**, 871 (1972).

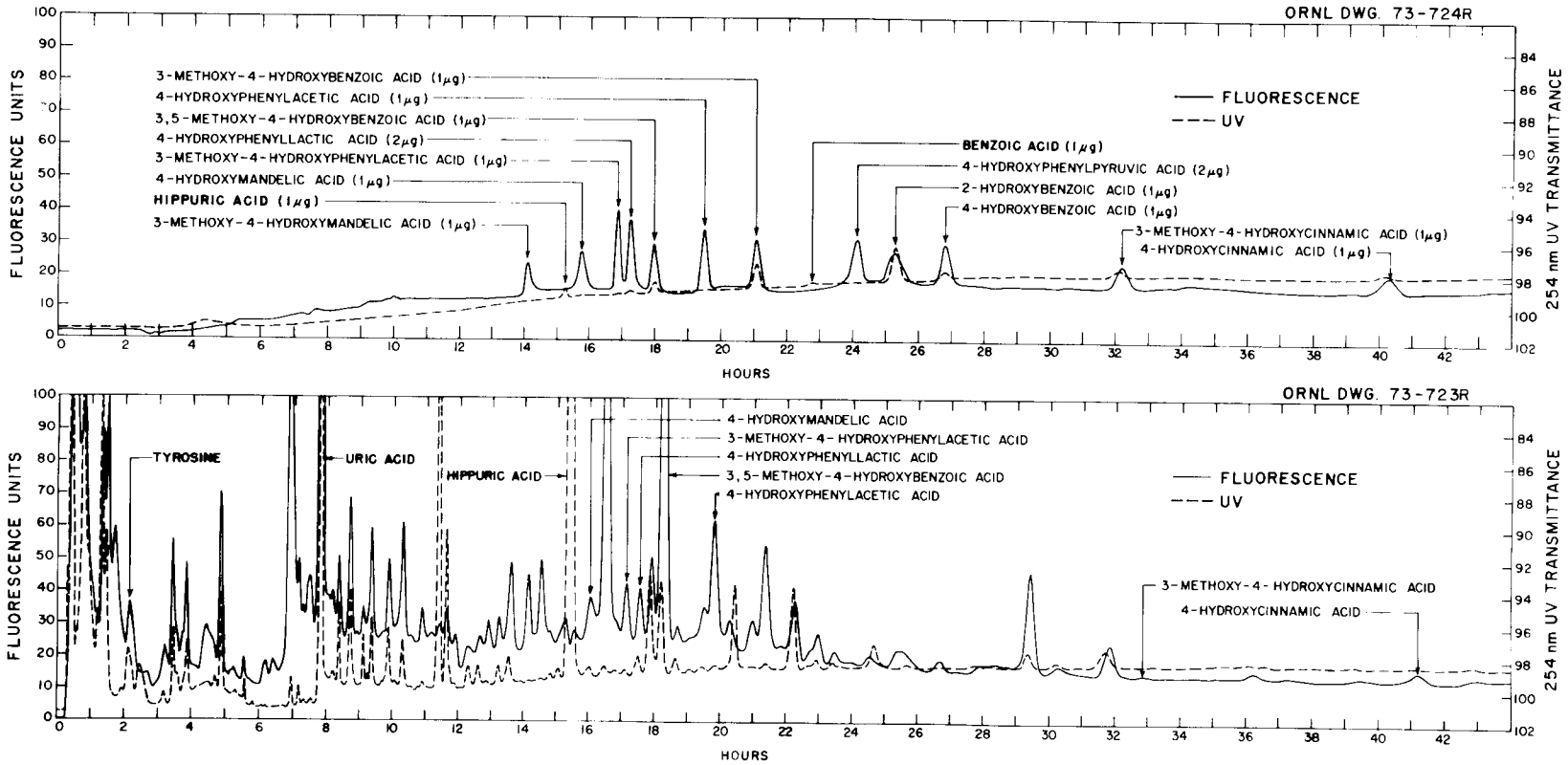

Fig. 10.9. Separation and detection of uv-absorbing compounds and compounds monitored by cerate oxidimetry from 0.27-cm^3 samples of reference aromatic acids (top) and urine (bottom).

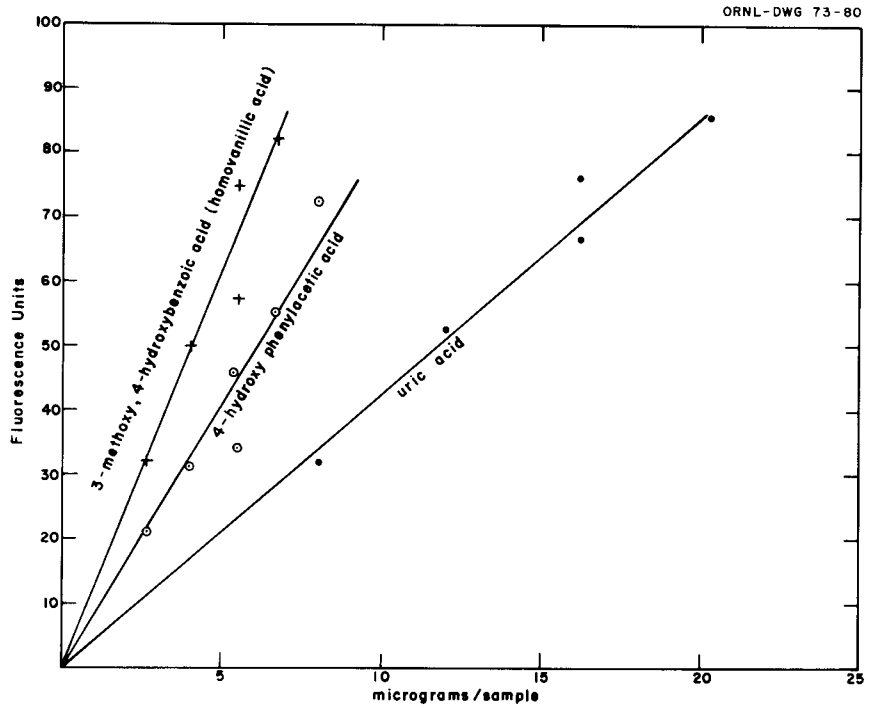

Fig. 10.10. Response of the cerate oxidative monitoring system for selected aromatic acids.

buffer salts used in the eluent is limited by the maximum solubility of these salts in acetone. Several eluent solvent systems that would meet such requirements have been investigated. The most effective system found thus far is one in which the pH of the eluent is varied from 11.3 to 12.1 while the NaCl concentration of the eluent is varied from 0.05 to 0.20 *M*. It was found that 1,3-diaminopropane, putrescine, spermidine, and cadaverine can be separated and detected satisfactorily in less than 3 hr using a 0.45-cm-diam by 15-cm-long cation exchange column (Aminex A-7, 15-μ-diam resin) with an eluent flow rate of 20 ml/hr.

Centrifugal Chromatography

Centrifugal methods are being applied to the concept of multicolumn, parallel-elution chromatography. A laboratory centrifuge has been modified, using a two-column rotor and a stationary photometric monitoring station, to demonstrate the feasibility of this technique. Cuvet windows at the terminal end of each chromatographic column allow photometric monitoring of each column eluate as it passes through the monitoring station.

The monitor must be capable of associating a given signal with the appropriate chromatographic column, and the recorder(s) must be capable of producing a chromatogram for each column. The single, stationary photometer is coupled with digital logic circuitry to keep track of the signals generated. The light source, either an incandescent lamp or a low-pressure mercury lamp, is mounted below the rotor with a photomultiplier (PM) tube detector mounted above. In operation, the PM output, generated by the light transmitted as each cuvet passes through the beam, is switched by the digital logic circuit to a sample-and-hold circuit corresponding to that cuvet. The maximum transmission that occurs during the passage of each cuvet is recorded once during each revolution. The digital logic circuit utilizes two stationary lamp-photodiode combinations and a slotted disk attached to the centrifuge rotor to synchronize the cuvet signal with the appropriate recorder trace. One combination is activated once during each revolution (rotor pulse) and initializes a counter or series of flip-flops. The other combination is activated every time a cuvet passes through the photometer beam (cuvet pulse) and advances the counter or opens the appropriate electronic gate. The version which is currently undergoing tests has only two cuvets, but the circuit may be expanded to follow many cuvets.

Results of tests with a preliminary rotor design demonstrated that radial flow through the cuvets was unsatisfactory since bubbles from dissolved gas tended

to accumulate in the cuvets. Thus, a second chromatographic rotor, which was designed to circumvent this problem, incorporates cuvets with inward-directed flow to sweep bubbles out of the cuvets. This rotor contains two 0.3-cm-diam by 9-cm-long columns, each with a 0.6-cm-diam by 0.15-cm cuvet. The columns were packed with Sephadex G-10, and the flow characteristics were determined. The total flow rate through each column was 240 ml/hr at 460 rpm and 1000 ml/hr at 1100 rpm. These rates are in the range of expected values that can be determined from the expression for the induced pressure and pressure increase for water in a spinning rotor:

$$P = 8.2 \times 10^{-9}\, \rho n^2 (r^2 - r_i^2)$$

and

$$\frac{dP}{dr} = 1.64 \times 10^{-8}\, \rho n^2 r,$$

where

P = pressure, psi,

r = radial position, in.,

r_i = radius of inner liquid surface, in.,

ρ = density of liquid, lb/ft^3,

n = rotational speed, rpm.

Comparison of the calculated pressure gradients with the 2.5 to 5 psi/in. required for the high-pressure UV-Analyzer columns shows that satisfactory flow rates through radial columns packed with small-diameter anion exchange resin can be achieved at reasonable rotational speeds. However, in order to obtain satisfactory flows through nonradial columns (spiral, S-shaped, etc.), rotational speeds above 2000 rpm would be required. Such columns would be necessary if a column length of 150 cm was used.

The chromatographic properties of the G-10 gel centrifugal columns were also studied. Samples containing riboflavin, cobalt chloride, and Dextran Blue were placed on the column and eluted while spinning. Although separation was achieved, it became obvious that considerable care was required in introducing the sample onto the column. Thus an inner ring that provides 50-μl sample wells for each column was designed for the rotor. These wells are positioned so that a sample remains discrete when the rotor is stationary but is flushed onto the column by the eluent when operational speed is attained.

10.6 APPLICATIONS AND EXPERIMENTAL RESULTS

Work relative to the isolation and identification of new biochemical constituents in body fluids is continuing, with emphasis being centered on subjects with various pathologies. New constituents are usually isolated by preparative chromatography and identified via results of spectral and chemical tests. Work on the development of computer software for on-line computer evaluation of the chromatographic data is also in progress.

Automated Chromatographic Peak Identification

Efforts to develop software for the on-line computer analysis of high-resolution liquid chromatographic data are under way. The current emphasis is on assigning an identity to each of the chromatographic peaks. This scheme is based on the normalized retention volumes of the sample peaks.[23] The ratio of the absorbance values at the peak maximum for the 254- and 280-nm photometer channels is used as an additional location parameter for the reference peaks. This two-dimensional bracketing of the reference compounds greatly enhances the utility of the identification program when complex chromatograms are being analyzed.

Identification of Urinary Constituents

Twenty-four new uv-absorbing compounds have been identified during the past year, increasing the total number of identified constituents to 119 (the total is 131 when positively identified carbohydrates are included). A list of these new compounds and the pathologies of the urine samples from which they were isolated is given in Table 10.4.

Applications

Studies involving the application of high-resolution liquid chromatographic systems to the investigation of various pathologic states are continuing; most of the work is being done in cooperation with other laboratories. Major recent findings of these collaborative programs are: (1) measurement of excretion levels of pseudouridine, 1-methylinosine, and N^2-dimethyl-

23. D. D. Chilcote and C. D. Scott, "A Mathematical Analysis of Normalization Techniques Used in Chromatography," *Anal. Chem.* (in press).

Table 10.4. Urinary compounds identified during this report period

Compound	Origin of sample
3-Methoxy-4-glucuronosidophenylacetic acid	Parkinson's disease, L-DOPA[a] therapy
3,4-Dihydroxyphenylacetic acid	Parkinson's disease, L-DOPA[a] therapy
3,4-Dihydroxymandelic acid	Parkinson's disease, L-DOPA[a] therapy
Tyrosine	Normal urine
N-Methyl-6-thioguanosine	Acute granulocytic leukemia, 6-thioguanine therapy
N^2-Methyl-7-methylguanine	9 cancer patients and 2 clinically normal subjects
2-Pyridone-5-carboxamide-N^1-riboside	Normal and pathologic urines
1-Methylguanosine	Normal and pathologic urines
1,3,7-Trimethyluric acid	Leukemia
Phenylacetamide[b]	Normal subjects, trace component
Benzamide	Normal subjects, trace component
3-Hydroxyphenylacetic acid	Normal subjects, trace component
Catechol	Child, vitamin B_6 therapy
Phenol	Child, vitamin B_6 therapy
3-Hydroxykynurenine	Ovarian carcinoma
Dopamine sulfate	Parkinson's disease, L-DOPA[a] therapy
4-Methylcatechol	Child, vitamin B_6 therapy
3-Glucuronosidomorphine	Cancer patients
3-Methoxy-4-hydroxyphenylacetamide[b]	Parkinson's disease, L-DOPA[a] therapy
Kynurenine	Ovarian and other types of cancer
Indican	Child with neurological seizures
1,7-Dimethyluric acid[c]	Cancer patients and normal subjects
Octopamine	Cancer patient, trace component
3,4-Dihydroxyphenylacetic acid (sulfate conjugate)	Parkinson's disease, L-DOPA[a] therapy

[a]L-DOPA = 3-(3,4-dihydroxyphenyl)-L-alanine.
[b]Probably sulfate conjugates.
[c]Substitution of methyl groups *may* be 1,3.

guanosine from normal subjects and subjects with various types of malignancies; (2) study of the various metabolic pathways of tryptophan, phenylalanine, and tyrosine in both normal and pathologic subjects; (3) effects of L-DOPA therapy on patients with Parkinson's disease; and (4) effects of fructose on urinary purine excretion.

The study involving the excretion of three methylated nucleosides is essentially completed. These nucleosides, pseudouridine, 1-methylinosine, and N^2-dimethylguanosine, which we have previously identified in urine samples of cancer patients,[13,24] are believed to be constituents of tRNAs. Pseudouridine in man and other higher animals is only found in RNA and, most abundantly, in amino acid tRNAs.[25] The two methylated nucleosides, 1-methylinosine and N^2-dimethylguanosine, have been found to be normal urinary constituents, with excretion levels of 2 to 3 mg/24 hr being reported for a number of subjects.[26]

Several authors have suggested that the urinary excretion of pseudouridine is related to tRNA turnover in humans. The absence of further catabolism of this

24. T. P. Waalkes, S. R. Dinsmore, and J. E. Mrochek, "Increased Urinary Execretion of the Nucleosides N^2-Dimethylguanosine, 1-Methylinosine, and Pseudouridine by Cancer Patients," *J. Nat. Cancer Inst.* (in press).

25. S. M. Weissman, "Human Pyrimidine Metabolism," *J. Am. Med. Assoc.* **195**, 27 (1966).

26. G. B. Chheda, A. Mittleman, and J. T. Grace, Jr., "Nucleosides in Human Urine. I. Isolation and Identification of N^2-Dimethylguanosine, 1-Methylinosine, and N^2-Methylguanosine from Normal Urine," *J. Pharm. Sci.* 58(1), 75 (1969).

Table 10.5. Urinary excretion of 1-methylinosine, N^2-dimethylguanosine, and pseudouridine by normal subjects

Age (years) and sex[a] of subject	Excretion rate (mg/24 hr)		
	1-Methylinosine	N^2-Dimethylguanosine	Pseudouridine
9,F	1.9	2.2	39.7
53,M	3.8	3.1	74.3
48,F	3.0	<1.2	40.9
36,M[b]	4.2	5.8	73.0
36,M[b]	3.4	4.5	83.0
15,M	4.2	3.6	77.0
27,M	5.0	6.0	89.0
33,M	3.0	3.8	51.6
24,F	3.2	3.1	49.4
18,M	4.3	4.8	75.3
19,M	4.1	3.2	56.2
19,M	2.9	3.8	65.9
39,F	3.9	4.1	49.8
24,F	3.0	2.5	73.8
39,M	5.5	3.9	77.8
27,M	6.1	5.5	73.8
12,M	4.8	5.0	50.1
Average	3.9	3.9	64.7

[a]M = male; F = female.
[b]Two different samples from the same subject.

nucleoside by humans is apparently due to the unique carbon-carbon linkage of the ribose moiety to uracil, in contrast to the usual carbon-nitrogen bonding for other purine and pyrimidine nucleosides. Weissman,[27] Adams,[28] and Pinkard[29] have reported that the pseudouridine excretion level is elevated for patients with leukemia and Hodgkin's disease; however, information on excretion rates in connection with other types of malignancies, especially solid tumors, is not available. Few published data are available on excretion rates by normal subjects for most of the minor nucleosides, including 1-methylinosine and N^2-dimethylguanosine.

For normal subjects (17 samples from 16 subjects), the average 24-hr excretion of 1-methylinosine was determined to be 3.9 mg/24 hr with a coefficient of variation (CV) of 54% (Table 10.5); the average excretion of N^2-dimethylguanosine was 3.9 mg/24 hr with a CV of 67%. These values are in reasonable agreement with the four values published by Chheda et al.,[26] which ranged from 1 to 3 mg/24 hr. Pseudouridine excretion by normal subjects averaged 64.7 mg/24 hr with a CV of 47%. Weissman[27] reported that normal subjects maintained on a purine-pyrimidine restricted diet had an average pseudouridine excretion level of 46 mg/24 hr; the range was 24 to 75 mg/24 hr.

The rates at which 1-methylinosine, N^2-dimethylguanosine, and pseudouridine are excreted by subjects with ten different types of neoplastic disease are listed in Table 10.6. The pseudouridine excretion rate is elevated for most of these subjects, while excretion of the other two nucleosides varies from the range of normal values to abnormally high values. However, for the two subjects having breast cancer, excretion rates for the three nucleosides were all within the ranges of normal subjects. Extremely elevated excretion rates for pseudouridine (>150 mg/24 hr) seemed to be accompanied by the highest excretion rates for 1-methylinosine and N^2-dimethylguanosine. Average excretion rates (in mg/24 hr) for the 22 subjects with cancer were: 1-methylinosine, 8.6; N^2-dimethylguanosine, 8.6; pseudouridine, 153.4. It should be emphasized that the clinical state of the disease and the chemotherapeutic treatment of patients prior to the time their urinary

27. S. M. Weissman et al., "Pseudouridine Metabolism. II. Urinary Excretion in Gout, Psoriasis, Leukemia, and Heterozygous Oroticaciduria," *J. Lab. Clin. Med.* 59, 852 (1962).

28. W. S. Adams, F. Davis, and M. Nakatani, "Purine and Pyrimidine Excretion in Normal and Leukemic Subjects," *Am. J. Med.* **28**, 726 (1960).

29. K. J. Pinkard, I. A. Cooper, R. Motteram, and C. N. Turner, "Purine and Pyrimidine Excretion in Hodgkin's Disease," *J. Nat. Cancer Inst.* 49(1), 27 (1972).

Table 10.6. Urinary excretion of 1-methylinosine, N^2-dimethylguanosine, and pseudouridine by subjects with various types of malignancies

Diagnosis and patient No.	Age (years) and sex[a] of subject	Excretion rate (mg/24 hr)		
		1-Methylinosine	N^2-Dimethylguanosine	Pseudouridine
Ovarian carcinoma				
1	53,F	7.0	22.5	232.0
2	35,F	3.4	4.3	91.4
3	55,F	6.5	11.0	111.0
Chronic myelocytic leukemia				
1	52,M	15.2	22.2	302.0
2	49,M	19.4	14.8	300.0
Acute leukemia				
1	6,M	6.4	7.6	299.0
2	8,F	5.0	4.7	87.5
Breast cancer				
1	51,F	1.4	1.2	34.0
2	56,F	3.9	4.9	67.4
Malignant melanoma				
1	60,M	3.1	2.5	97.5
2	60,M	6.0	5.3	113.0
3	47,F	21.0	8.8	232.0
4	55,F	6.8	10.3	155.0
Hodgkin's disease				
1	55,F	3.7	4.9	40.4
2	50,M	10.8	7.2	80.9
Bronchogenic carcinoma				
1	54,M	2.8	5.0	133.7
2	61,M	4.3	3.4	101.5
3	43,M	10.3	6.8	150.0
Synovial sarcoma	39,M	7.9	8.0	132.0
Testicular carcinoma	28,M	5.1	6.2	114.0
Burkitt's lymphoma				
1	16,M	17.0	19.0	291.0
2	20,M	21.8	9.6	210.0

[a]M = male; F = female.

samples were obtained have not yet been correlated with these results.

WATER POLLUTION STUDIES

The continuing buildup of soluble organic contaminants in surface waters from industrial and natural sources, as well as from the effluents of sanitary sewage plants, constitutes a serious threat to our national water quality. Furthermore, as water requirements increase, water contamination will become more extensive and additional processing steps may become necessary to permit immediate reuse of the process effluents. Various processing steps may also alter some of the organic pollutants, making them more toxic.

Most of the techniques used for analyzing for dissolved organic compounds are nonspecific and often indirect and, in general, do not provide sufficient information for developing advanced processing steps. The high-resolution analytical systems previously developed for the analysis of the molecular constituents of physiologic fluids (see Sect. 10.5) can provide reliable measurement of many of the refractory organic compounds present in the water supply at microgram-per-liter levels. Such analytical systems are now being adapted for use in this field. A new, continuous oxygen demand monitor has also been developed.

10.7 ANALYTICAL SYSTEMS

Most of the analytical systems being used in this program are relatively minor modifications of the high-resolution liquid chromatographic systems described in the previous sections (see Sects. 10.5 and 10.6). However, one analytical instrument, a continuous oxygen demand (COD) monitor, has been developed specifically for use in monitoring water supplies.[30]

This COD monitor, which is an outgrowth of the cerate-fluorescence monitor previously developed for use in liquid chromatography (Sect. 10.5), provides a rapid, sensitive measurement of the COD of waters. In this system a small side stream of the water supply (7 to 12 ml/hr) is withdrawn continuously and mixed with a cerate reagent that oxidizes the pollutants, reducing the cerium(IV) in the reagent to cerium(III) which is monitored fluorometrically. The sample stream is combined with the reagent stream containing 10^{-3} to 10^{-2} M perchloratoceric acid, and the resulting combination is then heated at 100°C for 5 min. The reagent concentration and the ratio of reagent to sample are selected so that about 10 to 50% of the cerium(IV) will be utilized. Thereafter, the mixture is diluted to a total of about 10^{-3} M cerium with cold 0.2 N H_2SO_4 to terminate the reactions. The fluorescence of the mixture resulting from trivalent cerium is then measured.

The continuous flow apparatus (see Fig. 10.11) used to evaluate this technique consisted of two pressurized reagent reservoirs, a peristaltic sample pump, two jet mixers, a boiling water bath, a flow fluorometer, and a strip-chart recorder. This apparatus can be used as a continuous stream monitor or as a discrete sample analyzer. In the latter mode of operation, it is capable of analyzing about ten samples per hour.

Reagent was metered by gas overpressure on the enclosed reagent reservoirs followed by appropriate

30. W. W. Pitt, Jr., S. Katz, and L. H. Thacker, "A Rapid, Sensitive Method for the Determination of the Chemical Oxygen Demand of Polluted Waters," pp. 1–5 in *Water – 1972*, A.I.Ch.E. Symposium Series Vol. 69, No. 129, published by the American Institute of Chemical Engineers, New York, N.Y., 1973.

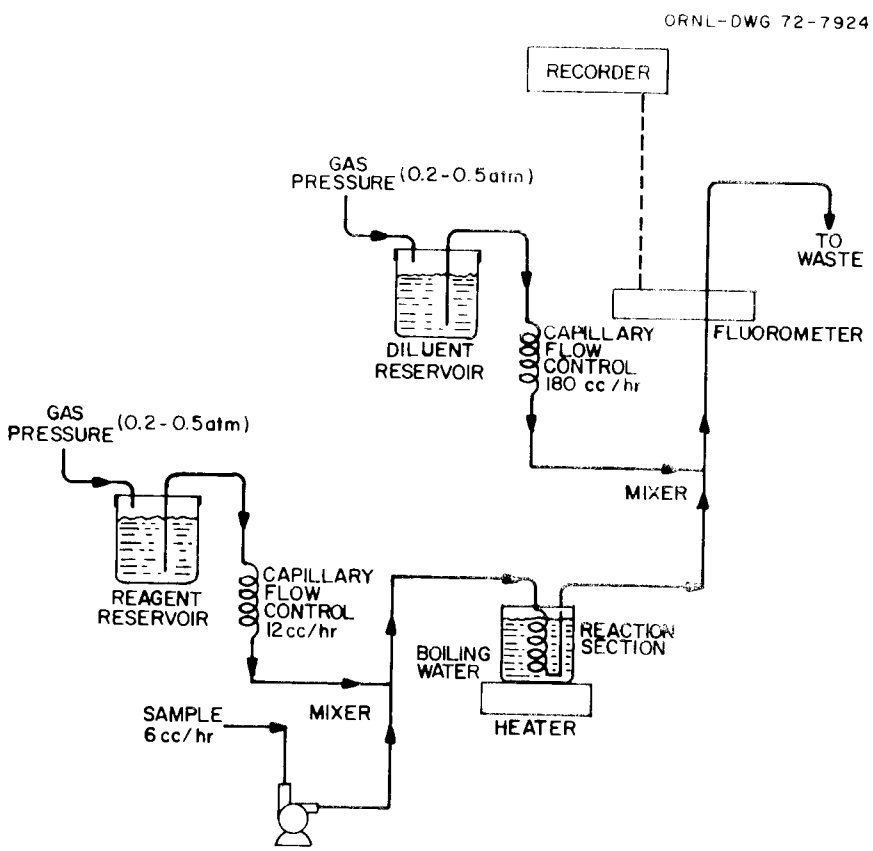

Fig. 10.11. Continuous chemical oxygen demand analyzer.

Table 10.7. Oxidation of organic compounds and polluted waters by perchloratoceric acid–COD method

Sample	Concentration (mg/liter)	Number of determinations	Oxygen consumed (mg/liter)	
			Average	Range
Acetic acid	10	4	6.1	5.2–7.4
Acetone	8	5	3.2	3.0–3.3
Benzene	3.3	4	2.8	2.4–3.5
Ethanol	7.5	3	11.0	10.8–11.1
Glucose	14.5	4	17.4	15.9–17.9
Glycine	10	4	3.0	2.8–3.2
Linear alkyl sulfonate	5	5	6.9	6.3–7.4
Pyridine	10	6	3.5	3.2–3.6
Sodium lauryl sulfate	5	5	13.5	12.8–14.6
Sewage plant effluent (industrial plant)	19 COD[a]	5	16.5	14.8–18.1
Clinch River water	8 COD	3	7.8	7.5–8.0

[a]Determined by standard method given in *Standard Methods for the Examination of Water and Waste Water*, 13th ed., pp. 495–99, published under the auspices of the American Public Health Association, American Water Works Association, and the Water Pollution Control Federation, 1971.

lengths of capillary tubing used to impose a flow resistance. The sample stream and the perchloratoceric acid stream were mixed in the first jet mixer, the sample entering through the jet and the reagent through the annulus. The cross sections of the jet and annulus are designed so that the linear velocities of the two fluid streams at the jet exit are nearly equal, thus minimizing backmixing. From this mixer the stream flows through a coil of Teflon tubing that is immersed in a boiling water bath (residence time, 5 min). This mixture is then diluted tenfold in the second jet mixer with 0.2 N H_2SO_4, which effectively stops the reaction. The concentration of trivalent cerium in this diluted stream is continuously measured by the flow fluorometer described in Sect. 10.5 and recorded on the strip-chart recorder.

The response of the system to various pollutants when operated as a discrete sample analyzer (introduction of a polluted-water sample for 1 min during each 5-min interval) is shown in Table 10.7. Of particular interest is the relatively close agreement between this automated method and the more cumbersome, standard method when analyzing sewage plant effluents and a general water supply.

10.8 ANALYTICAL RESULTS

Two major areas of application have been continued: (1) separation and identification of soluble organic pollutants that either occur naturally or are introduced by man; and (2) study of the effects of chlorination on dissolved organic constituents in the water supply. Since most pollutants are present in the parts-per-billion to parts-per-million range, concentration techniques are also being investigated to allow adequate quantitation or to provide enough material for identification.

Concentration Techniques

A two-step concentration procedure is currently being investigated for possible use in studying sewage effluents or highly contaminated water supplies when concentration by as much as 2000-fold is required. In this procedure, the bulk (90 to 95%) of the water is removed in a low-temperature vacuum evaporator and the remainder by freeze-drying. The product from freeze-drying is then redissolved in acetate buffer (pH 4.4) and adjusted to the desired final volume. Any undissolved solids at this point are removed by centrifuging. The recovery of noncarbonate organic compounds from sewage plant effluents using this procedure is greater than 95%.

The method has been applied to samples of natural waters, even though concentration factors of 10^4 or greater may be required. Unfortunately, in some cases, losses of organic compounds during the more extensive concentration have been as high as 75% when natural waters are concentrated. This high loss has been attributed to absorption on the relatively large amount of solids that are removed during the concentration of natural waters.

Table 10.8. Summary of chromatographic analyses of selected water supplies

Origin of sample	Concentration factor	Ultraviolet-absorbing peaks	Cerate oxidative peaks	Common peaks	Total number of different peaks
Watts Bar Lake	0.4×10^4	15	13	3	25
Walker Branch	10^4	21	24	11	34
Mississippi River	$\sim 4 \times 10^2$	6	14	3	17

A modification of the concentration technique is now being evaluated. In this case the sample is "desalted" by cation exchange prior to concentration. This results in removal of most of the solid-forming solutes and, as indicated by preliminary results, gives greatly improved recoveries.

Identification of Pollutants

The major efforts of the experimental program have been concerned with separation and identification of the individual molecular organic pollutants in various water supplies and in the effluents from sanitary sewage plants. Thirty-seven uv-absorbing compounds in samples from the effluents of the primary stage of domestic sewage plants and nine uv-absorbing compounds in samples from the effluents of the secondary stage of domestic sewage plants have been isolated, purified, and identified.

Work is also progressing on the analysis and identification of constituents, both those that are uv-absorbing and those that are detected by the cerate oxidimetric monitor, of various other water supplies. For example, several chromatographic peaks have been obtained by anion exchange chromatography of concentrated samples from Watts Bar Lake just above the Kingston Steam Plant, Walker Branch (a local stream), and the Mississippi River just below Memphis (Table 10.8). Isolation and identification of these separated constituents are currently under way.

Effects of Chlorination

Since little definitive information is available concerning the potential hazards resulting from the chlorination of polluted waters, a study was initiated to determine whether chlorinated organic compounds are produced during chlorination of various waters. Comparison of chromatograms of sanitary sewage plant effluents before and after chlorination showed that some chromatographic peaks disappeared while others appeared, apparently as the result of chlorination.

Tests with radioactive chlorine indicated that as many as 37 new chlorine-containing compounds may be formed when the effluent from the primary stage of a sanitary sewage plant is chlorinated to a nominal residual chlorine content. One of these chlorinated compounds has been definitely identified as 5-chlorouracil, and six other chlorinated compounds have been tentatively identified by chromatographic properties only. Toxicology studies of 5-chlorouracil have been initiated in conjunction with the Ecological Sciences Division.

FAST ANALYZER DEVELOPMENT

Fast analytical systems, primarily based on the GeMSAEC principle,[31] are under development to provide automated, fast analyses of molecular components in physiologic fluids and other aqueous mixtures by use of colorimetric, fluorometric, and sedimentation assays. Each of these systems contains a multicuvet rotor which rotates through a stationary monitor to produce output that is processed in real time by means of an on-line computer or some other data processing system.

10.9 ENGINEERING DEVELOPMENT

Miniature Analyzer System

Fast Analyzer systems based on the GeMSAEC principle have been successfully miniaturized to provide a basic instrument that requires about 1 ft^3 of space.[32,33] This miniature system has been shown to provide accurate and precise data for colorimetric assays of blood constituents, and a new operating technique allows direct introduction of whole-blood samples with subsequent automated removal of blood cells by sedimentation and assay of the plasma. The system can be interfaced to computer systems or to a

31. N. G. Anderson, "Basic Principles of Fast Analyzers," *Am. J. Clin. Pathol.* **52**, 778 (1970).

32. C. D. Scott and C. A. Burtis, "A Miniature Fast Analyzer System," *Anal. Chem.* **45**, 327A (1973).

33. C. A. Burtis et al., "Development of an Analytical System Based Around a Miniature Fast Analyzer," *Clin. Chem.* (in press).

Fig. 10.12. A miniature fast analyzer system including the analyzer, several plastic rotors, a sample-reagent loader, a data printer, and a rotor cleaning station.

small mechanical data system. The latter would allow an integrated system with considerable mobility.

A complete analytical system could include a recently modified Mark II miniature analyzer, several plastic rotors of various designs, an automated sample and reagent loader, a modified version of a previously developed data printer, and a rotor wash station (see Fig. 10.12). Many of the routine clinical assays have been adapted for use with the system, and special emphasis has been placed on operating the system in a multichemistry analytical mode. A complete analytical system was delivered to the Manned Spacecraft Center of NASA for evaluation for space applications.

Portable Fast Analyzer

To capitalize on the portability potential of a very small analyzer, a prototype of a portable, battery-operated analyzer has been designed, and the first model is now being evaluated. The system includes a new optical concept, using bifurcated fiber optics, that allows both absorbance and fluorescence measurements to be made. The analyzer is contained in and on a 4 × 4 in. cabinet, and the power supply consists of rechargeable batteries which are also contained in the cabinet. The analyzer uses plastic disposable rotors with up to eight cuvets in each rotor.

The rotor for surface fluorescence measurements is designed with an open face containing small cavities around the periphery of the rotor. In this unique design, no cover windows are used and there is a small lip above the cavity to prevent loss of fluid during rotation. Individual reagent and sample wells are also provided radially inboard for each of the reaction cavities; this design allows static introduction and mixing of the reactants. A different design will allow dynamic introduction of samples or reagents.

Fluorescence Fast Analyzer

A multicuvet Fast Analyzer using fluorometric detection with surface fluorescence has been designed and built.[34] The basic design concept is shown in Fig. 10.13. Excitation light is directed through a quartz light pipe at an angle (30 to 50°) to the surface of the rotating cuvets. The fluorescence signal is emitted normal to the rotor surface and is detected by a photomultiplier tube mounted directly over, and very near, the surface of the cuvet. A filter assembly is placed between the cuvet and PM tube for isolation of the emission signal.

The angled-excitation-surface fluorescence has advantages over direct-surface fluorescence (normal to the cuvet surface) since it minimizes reflected light. This design also permits the system to be used as a multicuvet photometer by repositioning the light pipe (Fig. 10.13). The same concept is now being considered for the miniaturized system.

---

34. T. O. Tiffany, C. A. Burtis, J. C. Mailen, L. H. Thacker, C. D. Scott, and N. G. Anderson, "A Dynamic Multicuvette Fluorometer Photometer Based on the GeMSAEC Fast Analyzer Principle," *Anal. Chem.* (in press).

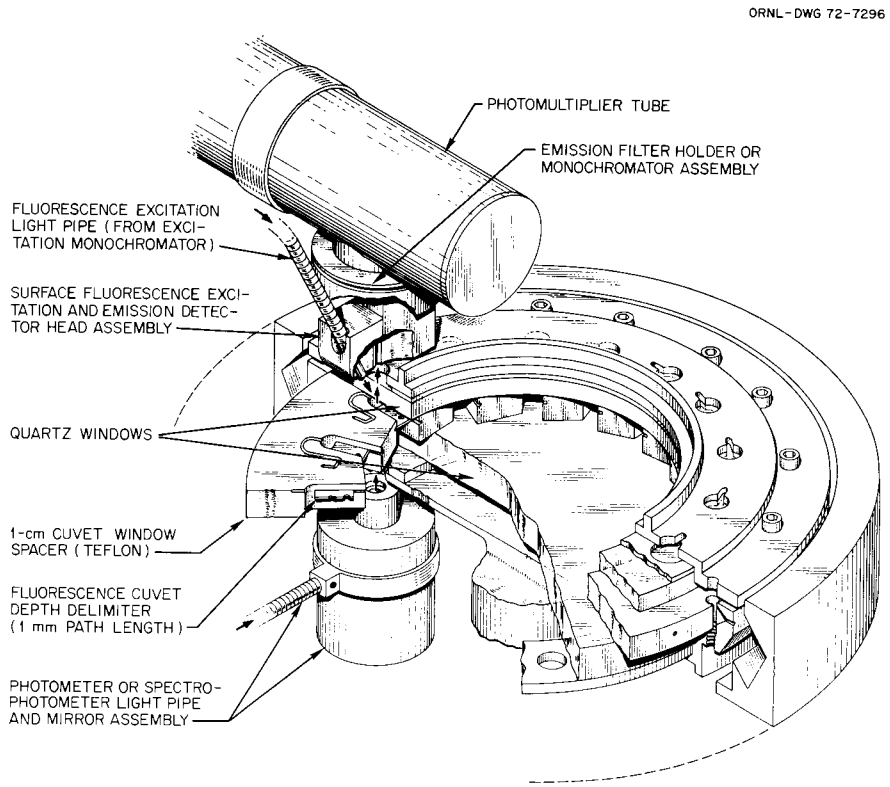

Fig. 10.13. Rotor and optical system of the fluorometric fast analyzer.

10.10 APPLICATION OF THE MINIATURE FAST ANALYZER

Most of the applications developed for the Fast Analyzers have been in the biomedical area; however, some inorganic assays are also being studied. Experiments were made to determine the feasibility of using the miniature Fast Analyzer (Mark I) for the determination of uranium and thorium by a colorimetric reaction. The chromogenic reagent Arsenazo III was chosen because of its high sensitivity, which results from its high molar absorptivity (greater than 12,000 liter mole^{-1} cm^{-1} at 660 nm). By careful control of pH, the reaction can be made specific for either uranium or thorium. The assay was found to be useful for both elements, and several interesting phenomena were observed:

1. The assay was found to be linear over a concentration range of 0.2 to 3 μg in 100 μl of sample.
2. The absorbances of all samples decreased slightly for the first 5 min, and then increased to stable values thereafter when absorption was monitored.
3. The complex formed between the reagent and either uranium or thorium was unstable for long periods (i.e., >12 hr), thus necessitating the absorption measurement to be made shortly after addition of reagent.

The results obtained from this initial study were promising, indicating that the miniature Fast Analyzer could be a useful analytical tool for the routine analysis of radioactive materials. With its advantages of portability and decreased size, the analyzer could be placed directly in a remote facility; the resultant data could be processed by a computer. In addition, the dynamic loading and disposable rotors being developed would simplify the analytical process and eliminate cleanup and containment problems since the entire rotor, containing the radioactive substances, could be disposed of after analysis.

11. Spectrophotometric Studies of Solutions of Lanthanides and Actinides

11.1 SPECTRAL STUDIES OF THE ACTINIDES

Investigation of the photoreduction of the uranyl ion has shown errors in literature values for the quantum yield. As illustrated by a typical curve[1] in Fig. 11.1, the quantum yield was believed to approach 0.6 at wavelengths between 2500 and 4300 Å but to decrease at longer wavelengths and reach zero at ca. 5000 Å. However, current studies with ethanol as substrate and activating light from an argon-ion laser show quantum yields ⩾0.6 at 4727, 4765, 4880, 4965, and even 5017 and 5145 Å (the points in Fig. 11.1). The earlier errors are not surprising since the decrease in molar absorptivity of uranyl (solid curve[2] in Fig. 11.1) to very low values near 5000 Å necessarily made difficult the estimation of the quanta actually absorbed.

Since the absorption spectrum of uranyl appears to reach zero at 5000 Å, the foregoing photoreduction at 5017 and 5145 Å may appear inconsistent. However, we have found "hot bands" in that spectral region,[3] and thus the photoreduction is explained as involving an excitation from the (thermal) vibrational levels of the ground state to the electronic excited state. This is the first experimental indication that a two-photon excitation might be usable in the photoreduction of uranyl. Such an excitation would proceed in two steps: (1) activation by absorption of an infrared photon (replacing the foregoing thermal excitation) and (2) activation to the electronic excited state by absorption of a visible photon of $\lambda > 5000$ Å.

1. E. Rabinowitch and R. L. Belford, *Spectroscopy and Photochemistry of Uranyl Compounds*, p. 283, Pergamon Press/Macmillan, New York, 1964.

2. *Chem. Technol. Div. Annu. Progr. Rep. Mar. 31, 1972*, ORNL-4794, p. 82.

3. J. T. Bell, "New Absorption Bands for the Uranyl Ion," *J. Mol. Spectry.* **41**, 409 (1972).

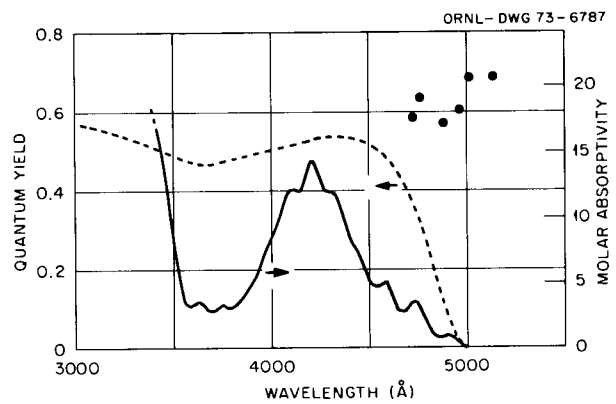

Fig. 11.1. Quantum yields in the photochemical reduction of uranyl. Dashed curve: typical literature values (ref. 1); uranyl sulfate in oxalic acid. Points: present measurements with argon-ion laser lines; uranyl sulfate in sulfuric acid with ethanol. Solid curve: uranyl sulfate absorption spectrum.

The photoreduction of UO_2^{2+} to U^{4+} was shown to involve UO_2^+ as an intermediate. Conditions were determined for maintaining a small stable concentration of UO_2^+ (in the presence of UO_2^{2+}) in 3*M* sulfate solution. The absorption spectrum of UO_2^+ in such solution was measured from 5000 to 8300 Å (Fig. 11.2). Measurement at wavelengths less than 5000 Å was uncertain because of overlapping absorption by the much more concentrated UO_2^{2+} (cf. Fig. 11.1); the concentration of U^{4+} was negligible. The UO_2^+ band at 7450 Å is in accord with our previous scheme of actinyl energy levels.[4] The steeply rising absorption curve at 5000 Å suggests that the UO_2^+ intermediate in photoreduction may interfere with the absorption of light in that region by uranyl.

4. J. T. Bell, "Continuities in the Spectra and Structure of the Actinyl Ions," *J. Mol. Spectry.* **31**, 703 (1969).

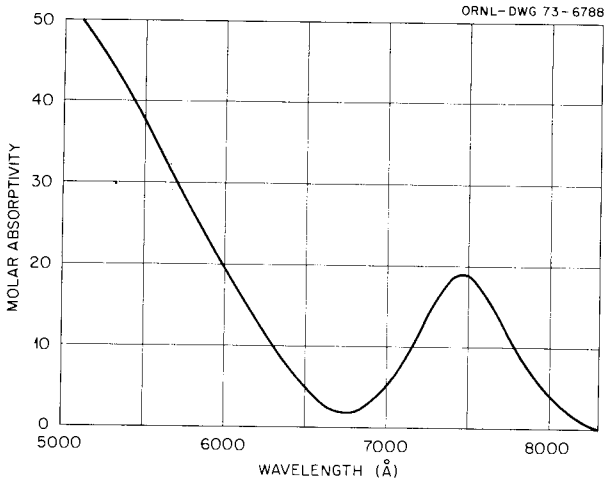

Fig. 11.2. Absorption spectrum of the UO_2^+ ion in sulfate medium. Conditions: 3 *M* SO_4^{2-}, 1 *M* UO_2^{2+}, negligible U^{4+}, pH 2.5.

11.2 SPECTROPHOTOMETRIC STUDIES OF I_2 IN CONDENSED GASES

The spectrum of I_2 in liquid CO_2 at 25°C has been measured and shows that qualitative studies of I_2 interactions in condensed gases can be pursued by spectrophotometric techniques. The visible absorption band of I_2 in $CO_2(l)$ is very similar to that in CCl_4, with a small blue shift of ca. 20 Å, which indicates that $CO_2(l)$ is a slightly more polar solvent than is CCl_4. A reaction between I_2 and H_2O in $CO_2(l)$ was found and was monitored by the intensity of the I_2 band. This reaction appeared to be much faster than would be expected from the behavior of I_2 in H_2O, and the reaction rate appeared to be first-order dependent on the I_2 concentration. The distribution of I_2 between the liquid and gas phases of CO_2 is also being considered.

11.3 PROTONIC WAVE FUNCTIONS AND SPECTRA

Computer programs were written and tested for use in calculating wave functions of the hydrogen molecule ion H_2^+ (and HD^+, etc.) without the use of the Born-Oppenheimer approximation. These wave functions are exact in the sense that all interparticle coordinates are included. Schrödinger's equation was solved by using the variational theorem with a trial function of the form

$$\psi = \Sigma_i k_i r_e^{a_i} r_p^{b_i} r_{pe}^{c_i} \exp\left[-A_i r_e - B_i r_p - C_i r_{pe}\right] ,$$

where one proton is fixed at the origin of the internal coordinate system, r_p and r_e are the distances from it to the second proton and the electron, and r_{pe} the distance between the electron and the second proton. An eight-term wave function gave −0.597109 Hartrees for the ground-state energy of H_2^+. The resulting calculated binding energy of H_2^+ is 2.642 eV, which compares well with the experimental value of 2.650 eV. It is expected that further improvements and correction for relativistic effects will give essential agreement.

Similar calculations for HD^+ and HT^+ gave ground-state energies of −0.597866 and −0.598146 Hartrees and binding energies of 2.663 and 2.671 eV. Experimental values are not available for these ions.

The absorption coefficient was calculated for the photoprotonic effect (analogous to the photoelectric effect) in monohydrides such as HF. The results show that the absorption coefficient is very small unless the frequency ν of the incident radiation is very close to the frequency ν_0 corresponding to the ionization potential of the proton. At the maximum, when $\nu = \nu_0$, the cross section of HF for the absorption of the photon[5] is of the order of 10^{-21} cm^2.

5. I. L. Thomas, "The Photoprotonic Effect in Hydrides," *Phys. Rev.* **A5**, 1104 (1972).

12. Preparation and Properties of Actinide Oxides

12.1 OXIDATION OF COLLOIDAL URANIA

Investigation of the oxidation of urania sols was continued by means of electrophoresis and ultracentrifugation. A major purpose of this study is to learn how to improve and protect the stability of urania sols, and a particular objective has been to determine whether or not U(VI) produced at the surface of a UO_2 crystallite stays at the surface. It has now been established, principally by ultracentrifugation separations, that the newly formed U(VI) neither stays in a surface layer nor diffuses into the crystallite, but instead dissolves in the intermicellar solution. The separable solids from a urania sol, containing 86.3% U(IV)–13.7% U(VI) as prepared, continued to contain ca. 14% U(VI) when separated after treatments with hydrogen peroxide to oxidize up to 20% of the total uranium; the uranium found in the intermicellar solution increased correspondingly. Thus the effect of oxidation during storage and handling of a crystalline urania sol on its stability does not result from a change in the nature or surface potential of the crystallites. Instead, it results from changes in the aqueous medium, including an increase in ionic strength and a resulting decrease in the zeta potential of the crystallites (see next section).

The effect of U(VI) on zeta potential was measured by moving-boundary electrophoresis. A 1 *M* CUSP urania sol, LS-25,[1] which contained 13.7% U(VI) and was fully crystalline by x-ray analysis, was diluted 1:50 as required for the optical measurements. The diluting solution was made to match the initial intermicellar solution of the sol in composition (0.0041 *M* UO_2^{2+}, 0.018 *M* NO_3^-, 0.083 *M* HCO_2H) and specific conductivity (0.00614 mho/cm at 25°C). The U(VI) content was increased either by increasing the uranyl concentration in the diluent or by adding a measured amount of hydrogen peroxide to oxidize a fraction of the urania. The results (Figs. 12.1 and 12.2) show the inverse dependence of the zeta potential on the ionic strength and hence on the amount of oxidized uranium. These quantitative results are examined in the next section in terms of the theoretical model of colloid particle interaction.

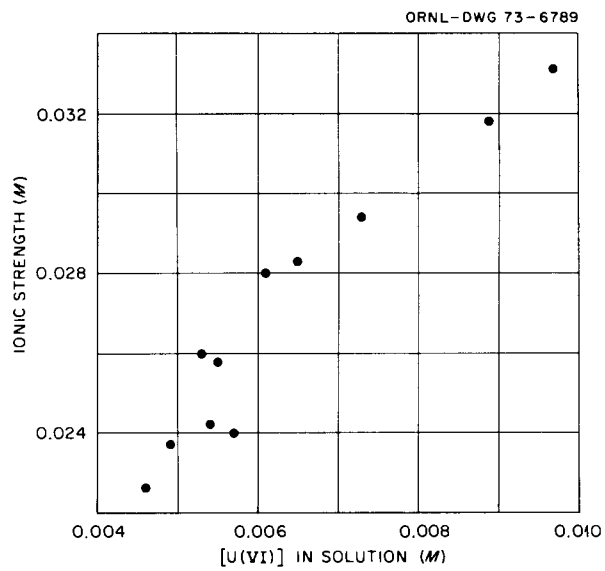

Fig. 12.1. Increase in ionic strength of diluted urania sols with increase of uranium(VI) concentration in the intermicellar solution. Concentration of urania sols, 0.02 *M*; proportion of U(VI) in the colloidal solids, 13.8 ± 0.4%.

1. J. P. McBride, K. H. McCorkle, W. L. Pattison, and B. C. Finney, "The CUSP Process for Preparing Concentrated Crystalline Urania Sols by Solvent Extraction," *Nucl. Technol.* 13, 148 (1972).

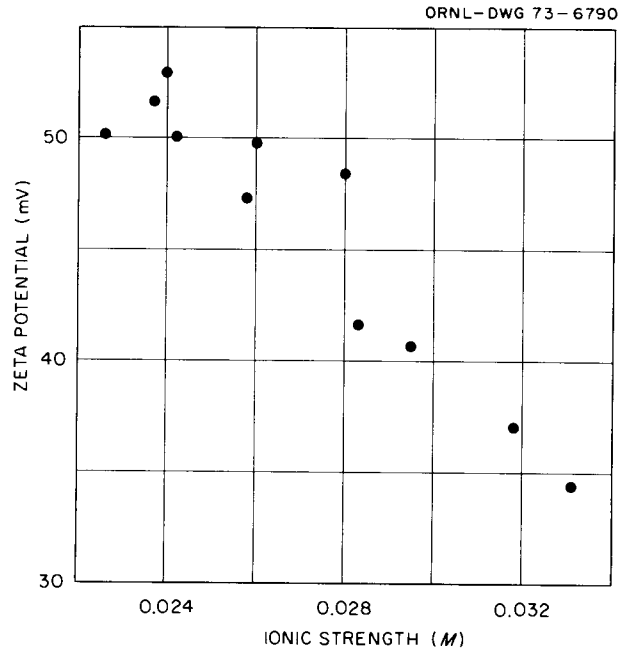

Fig. 12.2. Dependence of zeta potential of colloidal urania crystallites on the ionic strength of the intermicellar solution. Concentration of urania sols, 0.02 *M*; temperature, 20°C.

12.2 THEORETICAL MODEL OF COLLOIDAL INTERACTION

The theoretical model described last year[2] failed to give a minimum with respect to the parameters in the charge and potential functions. A new theory has been developed, also based on a process of minimization, in which the function to be minimized is

$$U = \int \left[\frac{1}{2} (\nabla \psi)^2 - \frac{8\pi n}{\epsilon} kT \cosh \left(\frac{ve\psi}{kt} \right) \right] dV .$$

Here ψ is the approximate potential, n is the number of ions per cubic centimeter at infinity, ϵ is the dielectric constant, k is Boltzmann's constant, T is the absolute temperature, v is the valence of the symmetrical electrolyte, e is the elementary charge, and dV is the element of volume. It can be shown with the methods of the calculus of variations that U is at a minimum when ψ is the exact potential which satisfies Poisson's equation. The programs required to calculate potentials for two interacting colloidal particles have been written. These have been tested for the case where the two particles are alike and have small surface potentials. Calculations are in progress for the case where the particles are different.

As described in the preceding section, the oxidation of the urania sols results in the dissolution of the U(VI) produced. The dissolved U(VI) increases the ionic strength of the intermicellar solution and decreases the zeta potential of the colloidal particles. In the concentrated sols ($\geqslant 1$ *M* UO_2), the oxidation first produces a thick thixotropic sol, then the sol becomes fluid again but still thixotropic, and finally the UO_2 precipitates. Such behavior is predicted by the theory of oriented flocculation.[3] According to this theory, the repulsive energy about a two- (or more) particle floc as seen by an approaching particle has a minimum in the axial direction and a maximum in the transverse direction. Table 12.1 lists these maxima and minima for four sets of zeta potentials and ionic strengths found in the work described in the preceding section. The fifth and sixth columns give the probabilities that the particle approaching a two-particle floc has an energy large enough to cross the corresponding maximum or minimum. The lower these probabilities are, the more stable is the sol.

2. *Chem. Technol. Div. Annu. Progr. Rep. Mar. 31, 1972,* ORNL-4794, p. 89.

3. I. L. Thomas and K. H. McCorkle, "Theory of Oriented Flocculation," *J. Colloid Interface Sci.* **36**, 110 (1971).

Table 12.1. Axial and transverse energy barriers and barrier-crossing probabilities for partially oxidized urania sols

(cf. Figs. 12.1 and 12.2)

Ionic strength (*M*)	Zeta potential (mV)	Energy barrier (ergs × 10^{13})		Barrier-crossing probability		
		Axial	Transverse	Axial	Transverse	Ratio
0.033	36	0.37	0.71	0.41	0.18	2.3
0.028	42	1.00	1.90	0.089	0.010	9
0.026	50	1.21	2.32	0.054	0.0034	16
0.024	53	1.47	2.80	0.029	0.0012	24

It can be seen that the more stable sols are those least oxidized, and that the axial/transverse probability ratio decreases as the oxidation increases. A high ratio leads to elongated flocs because the number of particles having sufficient energy to cross the axial barrier is much greater than the number capable of crossing the transverse barrier. These elongated flocs lead to thixotropic sols. As the oxidation increases, the ratio decreases and an increasing proportion of isotropic flocs is formed. This behavior leads to a fluid sol. Eventually, both barriers become so low that the sol is unstable and the UO_2 precipitates.

13. Chemical Engineering Research

13.1 THORIUM ION EXCHANGE WITH VERY SMALL RESINS

In recent years considerable interest has been generated, both at ORNL and elsewhere, in the use of very-small-particle ion exchange resins (diameter, <300 μ). Such resins have been useful in laboratory- or bench-scale separations since they allow the required time and equipment size to be reduced by an order of magnitude or more. In the last annual report in this series, we reported a study[1] of one system, plutonium nitrate anion exchange, in which the use of small resins appears to be economically attractive on an engineering or commercial scale. In this process, the mass transfer rates (and hence equipment size) are determined by low particle diffusion rates. The use of small resins was shown, as expected, to substantially reduce the required equipment size and/or to increase the processing rate. A procedure was also reported for designing "thin beds" that operate on a short cycle time.

The emphasis of the next phase of the study, undertaken during this report period, was centered upon two aspects of small resin applications: the availability and preparation of small-particle resins, and a quantitative, economic analysis which will aid in selection of the optimum particle size for a given application. Although the economic analysis was preliminary in some respects, it does provide a guideline for selecting ion exchange processes for which small-particle resins should be considered.

Small-particle ion exchange resins are available from manufacturers, both in sized fractions down to ~10 μ and in broader distributions of 200- to 400-mesh and <400-mesh fractions. The sized fractions are expensive and are not practical for large-scale applications. The broader distributions are available in limited quantities since no manufacturer intentionally produces large quantities of <400-mesh resins. It is unlikely that manufacturers will expend much effort to produce large quantities of small-particle resins until it has been demonstrated that this material warrants consideration.

A possible source of small-particle resin may be closely sized, irregularly shaped resin particles that are prepared by grinding larger-diameter resins. Therefore, Dowex 1X-8 resin (16 to 20 mesh) was ground in a Waring blender to approximately the size desired (10 to 50 μ) in order to test the hydrodynamic and mass transfer properties of irregularly shaped resins. The objective of this test was simply to evaluate the resulting resin particles; no attempt was made to study different grinding methods which could maximize the yield of particles of a desired size. The resin was sized into several fractions by elutriation. No attempt was made to define an effective diameter for any particular fraction of resin; the resin obtained with a given elutriation velocity was assumed to be similar to spherical resins obtained with that same velocity.

Pressure drop and thorium loading breakthrough curves were measured for beds containing either irregularly shaped or spherical resins, and breakthrough curves for beds having similar pressure drops were compared. The performance of the irregularly shaped resins was found to be similar to that of the spherical resins as illustrated in Fig. 13.1, which gives data for beds of essentially the same depth. The loading curves for spherical resins were obtained at a flow rate of 15 cm/min; those for irregular resins were obtained at a flow rate of 18.6 cm/min. The pressure drop across the resin bed was 100 psi in each case.

One interesting phenomenon was first observed with irregularly shaped resins. Under conditions of very high flow rates, and hence high pressure gradients, the resin beds appeared to compact. The pressure drop increased dramatically, and subsequent pressure drop measurements at lower flow rates were substantially higher than before compaction. However, after the resin was removed and repacked in the column, the pressure drop returned to the previous value. Later, this behavior was also observed with spherical resins. Again, differences in

1. *Chem. Technol. Div. Annu. Progr. Rep. Mar. 31, 1972,* ORNL-4794, pp. 91–93.

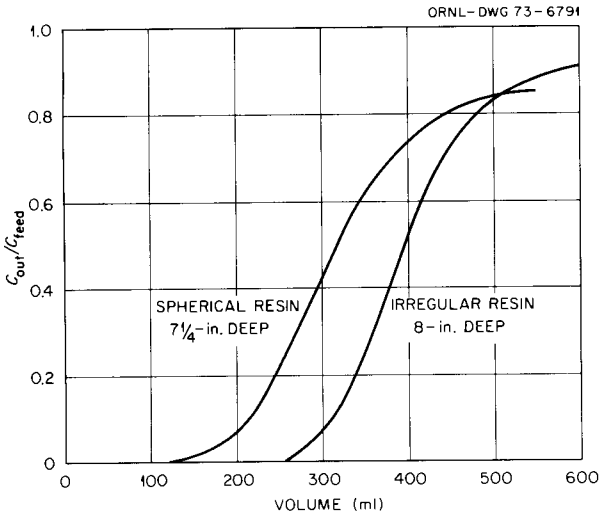

Fig. 13.1. Comparison of breakthrough curves obtained during loading of thorium nitrate on spherical and irregularly shaped resins.

performance between irregularly shaped and spherical resins appear to be small if they exist at all.

After it had been established that small resin particles can result in small high-capacity columns and that finely divided resin can be prepared in quantity, a cost assessment was made to determine the economic incentive for use of small-particle resins. Specific cost comparisons between small-resin-particle systems and conventional resin systems are needed for processes of interest such as plutonium concentration and purification by nitrate anion exchange. A cost analysis procedure of a more general nature could also aid in the selection of those processes in which smaller resins are likely to be advantageous. An initial effort to develop a costing procedure was made with assistance from students from the MIT Practice School.[2] The study was limited to fixed beds and to relatively simple load-elute processes (e.g., no chromatographic or continuous systems were considered). The breakthrough curves were predicted by the asymptotic solution developed by Rosen.[3] The pressure drop through the column was predicted by the Ergun equation; however, the results obtained in this manner were doubled to bring the prediction more in line with our experimental data (similar behavior has been observed by others).[4]

The use of small resins requires more effective filtration of the feed in order to prevent plugging of the bed. Some filtration is required for most ion exchange systems; thus only the cost of the additional filter required for use of small resins was evaluated for the comparative cost study. A thin (2-in.-deep) bed of resin (possibly inactive resin) was used for the filter. Although the filter bed would have to be backwashed periodically, it should be capable of removing any solids which would plug the ion exchange column. The lifetime of the filter bed was assumed to be equal to that of the column resin. When the pressure drop was less than 200 psi, the column and the filter vessels were costed as pressure vessels; when the pressure drop was higher than 200 psi, they were costed as autoclaves. Labor costs were estimated to be $3.50 per cycle. In making this estimate, the ion exchange system was assumed to be part of an existing plant. No allowance was made for automatic operation.

The cost of the resin is the most uncertain factor in the cost of any process involving the use of small ion exchange resin. Small-particle resin will certainly be more expensive than conventional resins; the more careful sizing alone would increase the cost. If irregularly shaped resins are used, their cost can be estimated by dividing the cost of large resins by the yield of desired particle size and adding the cost of grinding and separating the material by elutriation. With no special effort to maximize the yield of a size fraction, useful yields of 10 to 30% were obtained in our studies. It is likely that small, irregularly shaped resins could be prepared at a cost not greatly exceeding ten times that of conventional resin.

A range of particle sizes was considered in the comparative cost analysis, and the optimum size (for minimum process cost) was selected. The cost analysis was applied to the plutonium nitrate system (using thorium nitrate data), and the results indicate that the optimum resin size is in the 50-μ range even if the cost of the small resin is six times that of conventional resins.

This costing procedure will be refined to improve its reliability and to cover a wider range of options. In the meantime, these initial results will be useful in evaluating applications for small resins.

2. R. M. Mayer and C. S. Kim, *Economic Desirability of Small-Sized (<50 μ) Ion Exchange Resins,* ORNL-MIT-154 (September 1972).

3. J. B. Rosen, *Ind. Eng. Chem.* **46**, 1590 (1954).

4. C. D. Scott et al., *Biochemical Separation Systems Development Section of the Molecular Anatomy Program Progress Report for the Period March 1, 1970 to August 31, 1970,* ORNL-TM-3166 (December 1970), p. 22.

13.2 CHEMICAL ENGINEERING RESEARCH STUDIES RELATED TO MSR PROCESSING

Studies performed under the Chemical Engineering Research program are often reported more conveniently as part of the applied programs with which they are associated. Two studies supported by Chemical Engineering Research funds are reported in the section on "Molten-Salt Reactor Processing." They are:

1. Contactor Studies of a Simulated Molten-Salt–Liquid Bismuth System (see Sect. 3.11).
2. Axial Dispersion and Gas Holdup in Open Bubble Columns (see Sect. 3.12).

14. Tritium Separation Technology

Control of tritium release rates is likely to be a problem during the development and commercialization of controlled thermonuclear reactors; this is especially true of reactor concepts based on the deuterium-tritium cycle. The present fusion reactor designs use large quantities of tritium in the reactor plasma region. Sufficient tritium would be produced in a blanket region to allow replacement of that consumed by fusion reactions and to allow the fueling of additional reactors as required by growth in power demands. A study of tritium containment problems associated with fusion reactors was completed during the past year.[1,2] Much of the work since that time has involved initiating an experimental program that is responsive to needs suggested by the study.

Some conceptual designs for thermonuclear reactors incorporate a potassium Rankine cycle that is interposed between the lithium blanket and the steam generation system.[3] It has been proposed that lithium be added to the potassium in concentrations as high as 4 at. %. This would permit tritium to be recovered from the potassium as lithium tritide in a cold trap at a temperature of about 82°C.[4] It has been reported[5] that lithium and potassium have limited mutual solubilities; however, the boundaries of the miscibility gap have not been established. Since an adequate solubility of lithium in potassium is crucial to the use of this concept for removing tritium from the potassium system, one of the initial studies consisted of an investigation of the lithium-potassium system.

The apparatus and the experimental procedure were basically the same as those used in our previous liquid metal and molten salt studies.[6-9] Analyses of filtered samples were used to determine the composition of the two immiscible liquid phases. A transpiration technique was also used to sample the vapor phase that was in equilibrium with the two liquid phases. The measured mutual solubility data for the lithium-potassium system are shown in Fig. 14.1, where the logarithm of the solubility of lithium or potassium in the other material is plotted against the reciprocal of the absolute temperature. No depression of the melting points for the lithium-potassium mixtures was observed by thermal analysis, which is in agreement with the investigation of Bohm and Klemm.[10] At temperatures between 63 and 180°C, a potassium-rich phase that is in equilibrium with practically pure solid lithium is formed. At temperatures above 180°C, two liquid phases which have limited miscibility are present. The low mutual solubility values (less than 6000 ppm at 500°C) indicate that the consolute temperature is probably higher than 1000°C. Regular solution theory, when used with solubility parameters given by Hildebrand and Scott, predicts a consolute temperature of about 3000°C.[11] The observed apparent partial pressures are identical to the vapor pressures of lithium and potassium. This would be expected, however, since one liquid phase is almost pure lithium and the other almost pure potassium.

1. J. S. Watson, *An Evaluation of Methods for Recovering Tritium from the Blankets or Coolant Systems of Fusion Reactors,* ORNL-TM-3794 (July 1972).
2. J. S. Watson, *A Summary of Tritium Handling Problems in Fusion Reactors,* ORNL-TM-4022 (November 1972).
3. W. R. Chambers, A. P. Fraas, and M. N. Ozisik, *A Potassium-Steam Binary Vapor Cycle for Nuclear Power Plants,* ORNL-3584 (May 1964).
4. A. P. Fraas, *Comparison of Two Tritium Removal Systems Designed to Minimize Contamination of Steam Systems in Full-Scale Thermonuclear Power Plants,* ORNL-TM-2932 (April 1970).
5. F. I. Shamri, *Lithium and Its Alloys,* USAEC Report AEC-tr-3436 (1952).
6. L. M. Ferris, J. C. Mailen, J. J. Lawrence, F. J. Smith, and E. D. Nogueira, *J. Inorg. Nucl. Chem.* **32,** 2019 (1970).
7. C. E. Schilling and L. M. Ferris, *J. Less-Common Metals* **20,** 155 (1970).
8. F. J. Smith, *J. Less-Common Metals* **27,** 195 (1972).
9. F. J. Smith, *J. Less-Common Metals* **29,** 73 (1972).
10. B. Bohm and W. Klemm, *Z. Anorg. Allgem. Chem.* **243,** 70 (1939).
11. J. H. Hildebrand and R. L. Scott, *Solubility of Nonelectrolytes,* 3d ed., Reinhold, New York, 1950.

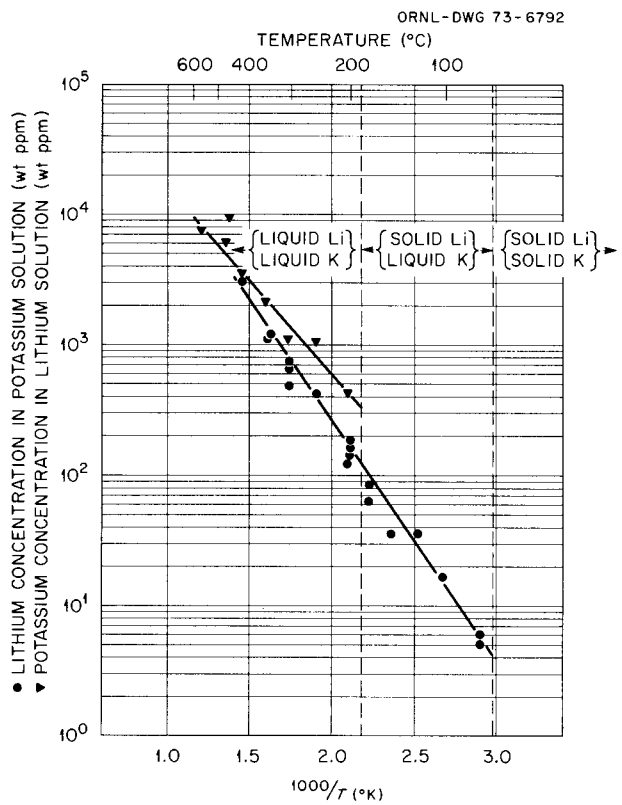

Fig. 14.1. Composition of the two immiscible phases in the lithium-potassium system.

It has been proposed that the cold trap in which lithium tritide is removed be operated at a temperature of about 82°C. At this temperature, the observed solubility of lithium in potassium is only about 9 wt ppm, which is much lower than the proposed value of 7340 wt ppm. Also, the vapor pressure of lithium is only about 40 mm at the operating temperature proposed for the potassium boiler (i.e., 1000°C). Thus, lithium would concentrate in the liquid in the boiler. It appears that these findings rule out the use of K–4% Li as a coolant material in the proposed reactor design.

The most promising means for removing tritium from liquid metal streams appear to consist of either (1) removal from lithium via metals that are highly permeable to tritium or (2) removal from potassium streams via formation of metal hydrides. (Another option for recovering tritium without unreasonable loss to the steam system involves using helium that contains oxygen at low concentrations as the coolant. Tritium could be easily removed from such a system as tritiated water; however, the use of helium would require a lower operating temperature than can be attained with liquid metal coolants.) Preparations have been made for measuring vapor-liquid equilibria with lithium-tritium and potassium-tritium systems. These data will allow design and evaluation of tritium removal systems that are based on the use of highly permeable metals. The required equipment has been fabricated, and tests are presently under way.

A small engineering experiment for measuring the rates at which tritium is sorbed onto metals from a potassium stream has been constructed and is now in operation. The current experiments, which involve sorption of tritium onto yttrium metal, will be followed by studies with both coated and bare zirconium metal. The results of these studies should identify difficulties that will be encountered with the use of solid sorbents and should indicate the approximate mass transfer rates and controlling mechanisms for each system. Experiments are being planned for measuring the rates at which tritium can be removed from liquid metal streams via highly permeable metals. Assistance is also being given to the ORNL Thermonuclear Division in planning and designing experiments that may use tritium.

15. Miscellaneous Programs

15.1 QUALITY ASSURANCE PROGRAM

A quality assurance program was initiated at ORNL in August 1970 with the circulation of Standard Practice Procedure 39. Quality assurance (QA) may be defined as a total effort to ensure that a material, component, system, or facility will perform satisfactorily through the application of planned and systematic actions. A Quality Assurance Director (QAD), functioning as a part of management, is responsible for the overall program at the Laboratory. Quality Assurance Coordinators (QACs), who report to the QAD, are responsible for the program on the Division level.

The Chemical Technology Division continued to implement and reinforce its QA program during the past year. Six procedures were issued for the first time; two others were revised and reissued. The *Chemical Technology Division Quality Assurance Procedure Manual* now consists of 14 approved procedures; four others are in preliminary draft form. These procedures are summarized in Table 15.1.

An important objective of a QA program is the selection of the quality level for the work at hand by means of a criteria meeting between the QAC and the Project Leader. Twenty-four such meetings were held last year. Additional aspects of the program involve the recognition and disposition of nonconformances as they arise. Twenty-four nonconformance reports and one incident report were generated in the Division during the current report period.

Other QA activities included the preparation of four Quality Assurance Program Plans and one Quality Verification Program Plan; preparation of a System Design Description is now under way. Metal Transfer Experiment No. 3, which was originally audited in FY-72, was reaudited.

Table 15.1. Procedures comprising the *Chemical Technology Division Quality Assurance Procedure Manual*

Number	Title of procedure	Date issued
QA-CT-1-100	Management and Planning	12/16/71
QA-CT-1-101	Guide for the Selection of Quality Level	12/19/72
QA-CT-1-102	Quality Assurance Program Plans	4/24/73
QA-CT-1-103	Standard QA Procedure for QL III Projects in Chemical Technology Division	3/27/72
QA-CT-2-100	Preparation and Approval of Engineering Drawings	1/15/73
QA-CT-4-101	Design Review	1/15/73
QA-CT-6-100	Nonconformance Reports	12/19/72
QA-CT-11-100	Identification of Dimensions, Angles, Finishes, and Other Features for Selected Inspection and Documentation	5/15/72
QA-CT-12-100	Material Identification and Control	1/15/73
QA-CT-14-100	Instrument Calibration	1/17/73
QA-CT-18-101	Operational Reviews	3/28/73
QA-CT-3	Incident Reporting Procedure	4/24/73
QA-CT-5	Evaluation of Experiments for Quality Level	6/23/71
QA-CT-Eng-1	Engineering Drawing Change Procedure	1/13/71
QA-CT-1-104	Criteria for Codes, Standards and Practices Related to Quality Levels	*a*
QA-CT-2-102	Technical Review of Design Documents	*a*
QA-CT-2-103	Design Planning, Elements and Practices	*a*
QA-CT-18-100	Control Methods for Documents	*a*

[a]Presently in draft form.

15.2 RESOURCE STUDIES

The Chemical Technology Division continued to contribute to the Laboratory's inter-Divisional efforts on resource and energy analyses. Activities this past year included work on mercury recycle (W. E. Clark) and the completion of the overall assessment of environmental problems associated with acquisition and use of the toxic metal cadmium (H. E. Goeller) for the National Science Foundation; a Research and Development Goals study on hydrogen and other synthetic fuels for the Federal Council on Science and Technology; assistance to the National Commission on Materials Policy (H. E. Goeller) on development of revised national policy recommendations for nonrenewable resources; and the preparation of a world survey of current energy resources (W. L. Carter and H. E. Goeller) for the World Energy Conference to be held in Detroit in September 1974.

Three activities involving mercury pollution and control studies were pursued, as follows:

1. A survey of the mercury reprocessing industry in the United States was completed, and a final report was published.[1]
2. A study of mercury usage by agencies of the U.S. Government was initiated and is now approaching completion. Of the 23 major agencies contacted, 8 had negligible usage. To date, tabulations show that 577 subagencies and sites used a total of 93,188 lb of mercury during 1971. The amounts recycled and the methods of disposal will be summarized in a final report.
3. A study of primary battery recycle as a method of decreasing environmental pollution by mercury was begun. Tentative flowsheets have been drawn up, and a preliminary cost estimate indicates that the process is economically attractive, provided that the problems of collection, transportation, and guaranteed supply can be solved.

The cadmium study, issued as ORNL-NSF-EP-21, *Cadmium, The Dissipated Element*, was described in detail in last year's report.

The Chemical Technology Division's contribution to the study of hydrogen and other synthetic fuels included: (1) a survey of the future large-scale production and use of methanol as an alternative, environmentally desirable, automotive fuel (O. L. Culberson); and (2) an evaluation of the use of coal as an interim source of synthetic fuels, particularly hydrogen (H. E. Goeller).

The National Commission on Materials Policy is a temporary presidential committee charged with making revised policy recommendations with regard to future mineral acquisition and use in the United States; their report is due to the President on July 1, 1973. The major effort by ORNL in this area was the preparation of a paper and presentation of a talk, both of which were entitled, "An Optimistic Outlook for Mineral Resources." The talk was initially given at the NCMP-sponsored University of Minnesota Forum (one of eight) on "Scarcity and Growth: Towards a National Materials Policy," July 22–24, 1972, in Minneapolis. This talk has subsequently been delivered to about half a dozen other groups that are interested in resource and environmental problems.

The major effort now in progress is the preparation of a book, *World Energy Conference Survey of Energy Resources, 1974.* This effort is being coordinated through the AEC Office of Planning and Analysis. The document will summarize the results of an energy resource survey now under way in the 67 World Energy Conference (WEC) nations, and possibly an undetermined number of additional nations which are members of the UN but not of WEC. The statistical summaries on fossil fuels (including bituminous sands and oil shales), hydraulic resources, uranium, and thorium, and semiquantitative data on solar, geothermal, tidal, and wind energy will be reported in a series of appendixes preceded by a six-chapter text on the various resources. The book will also contain a significant number of maps and other illustrative material needed to give full coverage to the subject.

At the request of the Committee on Science and Public Policy of the National Science Foundation, H. E. Goeller presented a discussion on "The Ultimate Mineral Resource Situation – An Optimistic View" at a meeting held June 8, 1972. A short summary of the presentation was published in the *Proceedings of the National Academy of Science,* Vol. 69, pp. 2991–92 (October 1972).

15.3 ENVIRONMENTAL IMPACT OF LWR NUCLEAR POWER PLANTS AND THE NUCLEAR FUEL CYCLE

Environmental Impact Statements on Power Reactors

The preparation of environmental impact statements for the AEC Directorate of Licensing has been a

1. W. E. Clark and W. Fulkerson, *Survey of the Mercury Reprocessing Industry 1968–1970,* ORNL-NSF-EP-22 (October 1972).

high-priority effort at ORNL, and the Chemical Technology Division has been an active participant in this program. A principal fraction of the work involves the calculation of the radiological source terms on which the environmental impact studies are based. The source terms are the concentrations and total annual amounts of radioactive isotopes in the gaseous and liquid wastes discharged to the environment. The work consists of making an engineering evaluation of the treatment systems for radioactive liquid and gaseous wastes at every nuclear power station applying for an operating license. The description of the systems and the derived source terms are sent to the AEC in Washington for review before being passed on to the Environmental Impact Task Group for that particular reactor at one of the national laboratories. To date, 52 nuclear power generating stations, involving a total of 78 nuclear reactors, have been analyzed. In January 1973, the responsibility for radwaste system evaluation was assumed by the AEC staff in Washington. Several documents are currently in preparation to complete the project at ORNL. These include operating manuals for the computer programs, as well as analysis manuals for evaluating the radwaste systems.

Radiological Impact Study – Cost of Radioactive Waste Treatment at LWR Nuclear Power Plants

A study was made to determine the effectiveness and the costs of alternative radioactive waste treatment systems for decreasing the releases of radioactive materials from model light-water PWRs and BWRs to the environment.[2] Members of the Reactor, Reactor Chemistry, and General Engineering Divisions also participated in the study. This effort was part of a project sponsored by the AEC Directorate of Regulatory Standards to define design objectives and limiting operating conditions to meet the criterion of "as low as practicable." The latter term is used in the Code of Federal Regulations (CFR) as a criterion for licensing nuclear installations. Public hearings were held in 1972 and 1973 to discuss a new proposed regulation, 10 CFR 50, Appendix I, which defines "as low as practicable." The ORNL report and supplementary reports by Battelle Northwest Laboratory and the AEC were issued in January 1973 as a single draft report for public comment in order to provide additional background infomation for the hearings.

In the ORNL report six conceptual cases and corresponding flowsheets were prepared for treating gaseous radwastes, and four cases and associated flowsheets were prepared for treating liquid radwastes, for both a typical PWR and a typical BWR power plant using presently available technology. Case 1 of each set represents the base cost for a zero or minimal treatment system; the highest case numbers represent the most advanced, complex systems, which would allow the lowest releases of radioactive materials. The gaseous and liquid cases were combined to form 13 PWR radwaste treatment cases and 12 BWR radwaste treatment cases. The annual amounts of radioactive materials released (the source term) and the capital, annual, and contribution of power costs were calculated for each case.

In this study, the capital costs for radwaste treatment systems for large two-reactor plants varied from about $5 million to $30 million, annual costs from about $1 million to $6.5 million, and the contribution to power generation costs from about 0.1 to 0.4 mill/kWhr, depending on the degree of radioactive retention desired and the complexity of the systems. The amounts of radioactive material discharged and the costs of the waste treatment systems calculated by ORNL were used in studies at Battelle Northwest Laboratory and by the AEC to correlate radiological impact to the environment, power needs, and cost of treatment of radioactive wastes.

Environmental Impact Study of the Nuclear Fuel Cycle

A new program to develop engineering and environmental information by means of comprehensive technical studies was initiated in January 1973. These studies will be of direct use to the Directorate of Regulatory Standards (DRS) in formulating appropriate "as low as practicable" guidelines for application to all facilities of the nuclear fuel cycle except those for power production. (Similar information has been obtained for power production.)

The facilities to be studied in the first phase of this project will be those for milling of uranium, preparation and fabrication of light-water reactor fuels from enriched uranium, preparation and fabrication of fuels containing plutonium, and reprocessing of fuels from light-water reactors. The facilities proposed for study in

2. R. E. Blanco et al., "Radiological Impact Study – Part I: Cost of Radioactive Waste Treatment at Light Water Nuclear Power Plants," Appendix B in *Draft Environmental Statement Concerning Proposed Rule Making Action: Numerical Guides for Design Objectives and Limiting Conditions for Operation to Meet the Criterion "As Low As Practicable" for Radioactive Material in Light-Water-Cooled Nuclear Power Reactor Effluents* (January 1973).

the second phase of the project are those for conversion of "yellow cake" to UF_6, milling of thorium, preparation and fabrication of fuels from thorium and ^{233}U, reprocessing of fuels from reactors with ^{233}U and thorium, and permanent disposal of waste in commercial burial grounds. Evaluation of facilities for uranium enrichment and the shipping of radioactive materials may be added later, at the request of the AEC, to the scope of the second phase of the project.

The engineering part of each study will develop incremental capital and operating costs for changes and additions to systems and will develop corresponding source terms for radioactive emissions and noxious effluents. These systems will cover the range from present practice to the foreseeable limits of available technology on the basis of expected typical and normal operation over the life of the facilities. Estimates of errors inherent in the development of these data will be stipulated.

The environmental part of each study will determine the behavior of radionuclides and other noxious materials in the environment and will quantitatively estimate the changes in radioactive exposure to plant personnel, the radioactive exposure to the public, and the impact to the environment. Estimates of errors inherent in the development of the data will be provided.

Treatment of Radioactive Liquids at Light-Water Power Reactors by Evaporation and Ion Exchange

Surveys were made to characterize the use of evaporation and ion exchange (demineralization) for treating radioactive liquids at LWRs.[3,4] Although these operations are used extensively to treat plant streams and radioactive wastes at power reactors, actual plant operating data are limited and vary both with location and with plant design parameters. Consequently, survey reports were needed to provide industry and the AEC with the information required to predict the efficiency of evaporation and ion exchange treatment systems for use in plant design and in environmental reports and statements.

Evaporation.[3] Operating and design data for evaporators were collected by direct contacts with 30 organizations, including suppliers of nuclear reactor systems, architect-engineers for these systems, equipment manufacturers, and operators of present and future nuclear power stations, as well as selected AEC facilities. The principal emphasis was placed on data concerning the system decontamination factors (DFs) and feed concentration/condensate concentration ratios that were achieved. The report includes recommended DFs for different classes of radionuclides based on literature data, plant experience, and their known behavior in boiling solutions. The basic theoretical and design factors influencing the DFs of evaporators are also presented in order to facilitate application of the results to the design and evaluation of evaporators for treating radioactive wastes.

The results of this survey show that a system DF of 10^3 to 10^4 can be expected for nonvolatile radioactive contaminants treated in evaporators.[5] Similar DFs can be expected for ruthenium under alkaline, but not acidic, conditions. The DFs for iodine can be expected to be 10^2 to 10^3 under alkaline, but not oxidizing or acidic, conditions. If wastes containing oils, soaps, and detergents are mixed with aqueous wastes, the above DFs are reduced by a factor of about 10. All these values assume that the evaporator is well designed, adequately sized, and operated with reasonable skill. Higher decontamination factors, 10^5 to 10^6, can be achieved but require simultaneous optimization of all conditions, for example, feed conditions which ensure that all solutes are nonvolatile, evaporator design and operating conditions to minimize entrainment, and operator skill and attention to ensure that these conditions are maintained.

Ion exchange.[4] Data were obtained from 36 organizations, including utility companies, reactor designers, architect engineers, ion exchange resin and equipment manufacturers, a fuel reprocessing plant, ORNL, and the Idaho National Reactor Testing Station. The principal emphasis was placed on the decontamination of aqueous solutions characterized by low- and intermediate-level radioactivities (10^{-7} to 1 μCi/ml). The report presents the principles of ion exchange and includes recommended average DF values for various ion exchange systems and different groups of radionuclides. These values are based on ion exchange fundamentals, literature data, and plant experience.

The types of ion exchangers most commonly used in nuclear power plants are strong acid cation and strong base anion exchange resins having a polystyrene matrix with divinylbenzene as the cross-linking agent. These resins, which normally have particle sizes in the range of 0.4 to 0.7 mm, are utilized primarily in mixed-bed

3. H. W. Godbee, *Use of Evaporation for the Treatment of Liquids in the Nuclear Industry*, ORNL-4790 (in preparation).

4. K. H. Lin, *Application of Ion Exchange Technology in Nuclear Power Plants*, ORNL-4792 (in preparation).

5. The system DF is defined as the ratio of the concentration of a contaminant in the feed to that in the condensate.

(deep-bed) ion exchange systems; however, they are also used in a mixed powder form (>90% are smaller than 0.03 mm). The powdered-resin ion exchange system is used as both a filter and an ion exchanger in the treatment of the reactor coolant and steam condensate at some BWR plants.

A uniform method for monitoring the performance of ion exchange systems is not used. However, the gross DF, as measured by the difference in concentrations between the feed and effluent, along with the electric conductivity of the solutions and pressure drop across the system are widely used by reactor operators and designers. Typical DF values assumed for these systems generally range from 10 to 100, depending on the reactor type, types of ion exchange systems, and specific liquid streams being treated. These values may not represent the true performance of the system unless the feed throughput and concentrations of major radionuclides in the feed are known. However, the predicted or desired DF can be achieved if the feed and effluent are monitored continuously for the nuclides of interest. When the desired DF is reached, the feed can be discontinued and the resin regenerated.

15.4 CONTROL OF EMISSIONS FROM FOSSIL-FUELED POWER PLANTS

The Chemical Technology Division, under the sponsorship of the U.S. Atomic Energy Commission, is engaged in a joint project with the Ohio Valley Electric Corporation (OVEC) to evaluate the alternative methods for retrofitting power plants that burn high-sulfur coals to provide compliance with proposed emissions standards for sulfur oxides, nitrogen oxides, and particulates. Of particular concern is the air pollution control problem at the Clifty Creek power plant of the Indiana-Kentucky Electric Corporation (a wholly owned subsidiary of OVEC), which supplies a significant fraction of the electric power used at the AEC's gaseous diffusion plant in Portsmouth, Ohio.

The study, which was initiated in February 1973, will be completed with the issuance of a final report by September 1973. This report will present evaluated information with respect to the technical practicality, status of research and development, capital and operating costs, and time schedules for implementation of the alternative methods for providing low-emission power generation in existing plants.

We are presently evaluating the following basic methods for reduction of emissions: (1) purchase of low-sulfur fuels (e.g., desulfurized fuel oil or low-sulfur western coal), (2) production of lower-sulfur fuels from local coals (e.g., low-Btu power gas, synthetic fuel oil, or desulfurized coal), and (3) treatment of the flue gas (e.g., by scrubbing with a limestone slurry). The first method has the advantage of requiring no new technology; this advantage, however, may be offset by the scarcity or high price of low-sulfur fuels. The technologies for implementation of the other methods are in various stages of development and testing.

Publications, Speeches, and Seminars

BIOCHEMICAL TECHNOLOGY

Anderson,[1] N. G., C. A. Burtis,[1] J. C. Mailen, C. D. Scott, and D. D. Willis,[1] "Feasibility of Miniaturization of a Fast Analyzer," *Anal. Lett.* **5**, 193 (1972).

Burtis,[1] C. A., "Centrifugal Chemical Analysis," presented at the 7th Annual Meeting of the Association for the Advancement of Medical Instrumentation, Las Vegas, Nev., Apr. 23–26, 1972.

Burtis,[1] C. A., "Development of a Miniature Fast Analyzer," presented at the Spring Meeting of the Southeastern Section of the American Association of Clinical Chemists, Nashville, Tenn., Apr. 20–22, 1972.

Burtis,[1] C. A., "Development of a Miniature Fast Analyzer," presented at the 8th International Congress on Clinical Chemistry, Copenhagen, Denmark, June 18–23, 1972.

Burtis,[1] C. A., "Development of a Miniature Fast Analyzer," presented at the 24th National Meeting of the American Association of Clinical Chemists, Cincinnati, Ohio, Aug. 20–25, 1972.

Burtis,[1] C. A., "Introduction, History and Theory of the Fast Analyzer," presented at the ASCP Fast Analyzer Workshop, San Francisco, Calif., Oct. 14, 1972.

Burtis,[1] C. A., "Studies in Drug Metabolism by High Pressure Ion Exchange Chromatography," presented at the Gordon Conference on Drug Metabolism, Plymouth, N.H., Aug. 4, 1972.

Burtis,[1] C. A., "The ORNL Fast Analyzer Development Program," presented at Queen Elizabeth Hospital, University of Birmingham, Birmingham, England, June 12, 1972.

Burtis,[1] C. A., "The ORNL Fast Analyzer Development Program," presented at the Atomic Energy Research Establishment, Harwell, England, June 13, 1972.

Burtis,[1] C. A., "The ORNL Fast Analyzer Development Program," presented at St. Georges Hospital, London, England, June 14, 1972.

Burtis,[1] C. A., "The ORNL Fast Analyzer Development Program," presented at Measuring and Scientific Equipment, Ltd., Crawley, England, June 15, 1972.

Burtis,[1] C. A., "The ORNL Fast Analyzer Development Program," presented at the University of Colorado School of Medicine, Denver, Colo., Oct. 18, 1972.

Burtis,[1] C. A., "Use of the Fast Analyzer for the Study of Drug Metabolism and Other Clinical Applications," presented at the Gordon Conference on Drug Metabolism, Plymouth, N.H., Aug. 4, 1972.

Burtis,[1] C. A., W. F. Johnson,[2] and J. C. Mailen, *Modifications of a NILAB Diluter-Sampler Used in the Development of an Automated GeMSAEC Sample-Reagent Loader,* ORNL-TM-3876 (September 1972).

Burtis,[1] C. A., W. F. Johnson,[2] J. C. Mailen, and T. O. Tiffany,[1] "Development of a Miniature Fast Analytical System," presented at the Fifth Annual Symposium on Advanced Analytical Concepts for the Clinical Laboratory, ORNL, Mar. 15–16, 1973.

---

1. MAN Program.
2. Instrumentation and Controls Division.

Burtis,[1] C. A., J. C. Mailen, W. F. Johnson,[2] and N. G. Anderson,[1] *Scand. J. Clin. Lab. Invest.* **29**, 16.3 (1972).

Burtis,[1] C. A., J. C. Mailen, W. F. Johnson,[2] C. D. Scott, and T. O. Tiffany,[1] "Miniaturization of a Fast Analyzer," presented at the National Meeting of the Association for the Advancement of Medical Instrumentation, Washington, D. C., Mar. 21–24, 1973.

Burtis,[1] C. A., J. C. Mailen, W. F. Johnson,[2] C. D. Scott, T. O. Tiffany,[1] and N. G. Anderson,[1] "The Development of a Miniature Fast Analyzer," presented at the 8th International Congress on Clinical Chemistry, Copenhagen, Denmark, June 18–23, 1972.

Burtis,[1] C. A., J. C. Mailen, W. F. Johnson,[2] C. D. Scott, T. O. Tiffany,[1] and N. G. Anderson,[1] "Development of a Miniature Fast Analyzer," *Clin. Chem.* **18**, 753–61 (1972).

Chilcote, D. D., "An Identification Scheme for Chromatographically Separated Constituents That Can Be Used with a Small Computer," presented at the Fifth Annual Symposium on Advanced Analytical Concepts for the Clinical Laboratory, Mar. 15–16, 1973, ORNL.

Chilcote, D. D., "Column-Chromatographic Analysis of Naturally Fluorescing Compounds: II. Rapid Analysis of Indoleacetic Acid and 5-Hydroxyindoleacetic Acid in Biologic Samples," *Clin. Chem.* **18**, 1376 (1972).

Chilcote, D. D., "Rapid Chromatographic Analysis of Indoleacetic Acid and 5-Hydroxyindoleacetic Acid," presented at the Fall Meeting of the Southeast Section of the American Association of Clinical Chemists, Atlanta, Ga., Oct. 12–15, 1972.

Chilcote, D. D., and J. E. Mrochek, "The Chromatographic Analysis of Naturally Fluorescing Compounds: 1. Rapid Analysis of Nanogram Amounts of Indoles in Physiologic Fluids," *Clin. Chem.* **18**, 778–82 (1972).

Chilcote, D. D., and J. E. Mrochek, "The Indole Analyzer: A Simple, Sensitive Liquid Chromatographic Analyzer for Naturally Occurring Indoles in Body Fluids," presented at the 8th Annual Meeting, Association for the Advancement of Medical Instrumentation, Washington, D.C., Mar. 21–24, 1973.

Chilcote, D. D., C. D. Scott, and W. W. Pitt, Jr., "The Autograd: An Automated, Simplified Eluent Gradient-Generating System for Use in Liquid Chromatography," *J. Chromatogr.* **75**, 175–86 (1973).

Egan, B. Z., "Separation of Oligonucleotides by Reversed-Phase Chromatography," *Biochim. Biophys. Acta* **299**, 245–52 (1973).

Egan, B. Z., "Separation of Oligonucleotides by Reversed-Phase Chromatography," presented at the 57th Annual Meeting of the Federation of American Societies for Experimental Biology, Atlantic City, N.J., Apr. 15–20, 1973; published in *Federation Proc.* **32**, 586 (1973).

Egan, B. Z., and A. D. Kelmers, "Rapid Chromatographic Separation of Ribosomal Ribonucleic Acids," *Preparative Biochem.* **2**, 265–74 (1972).

Johnson,[2] W. F., J. C. Mailen, C. A. Burtis,[1] T. O. Tiffany,[1] and C. D. Scott, "Development of a Portable Data Processor with Mechanical Data Output for Use with a Miniature Fast Analyzer," *Clin. Chem.* **18**, 762–66 (1972).

Jolley, R. L., J. E. Mrochek, C. D. Scott, and J. C. Lowery,[3] "Body Fluid Constituents of Dogs," *Veterinary Medicine/Small Animal Clinician* **67**(7), 794–800 (1972).

Jolley, R. L., W. W. Pitt, Jr., and C. D. Scott, "High-Resolution Analyses of Refractory Organic Constituents in Aqueous Waste Effluents," presented at the 19th Annual Meeting of the Institute of Environmental Sciences, Anaheim, Calif., Apr. 1–5, 1973; to be published in the *Proceedings.*

Katz, Sidney, "A Sensitive Determination of Organic Acids in Body Fluids Using Liquid Chromatography and Cerate Oxidation Detection," presented at the 24th National Meeting of the American Association of Clinical Chemists, Cincinnati, Ohio, Aug. 20–23, 1972.

Katz, Sidney, and W. W. Pitt, Jr., "A New Versatile and Sensitive Monitoring System for Liquid Chromatography: Cerate Oxidation and Fluorescence Measurement," *Anal. Lett.* **5**, 177 (1972).

---

3. Dalmatian Research Foundation, York, Penn.

Katz, Sidney, and W. W. Pitt, Jr., "A Sensitive Determination of Organic Acids in Body Fluids Using Liquid Chromatography and Cerate Oxidation Detection," presented at the 24th National Meeting of the American Association of Clinical Chemists, Cincinnati, Ohio, Aug. 20–23, 1972.

Katz, Sidney, and W. W. Pitt, Jr., *Automated Analyses of Polluted Water,* ORNL-TM-3862 (August 1972).

Katz, S., W. W. Pitt, Jr., and G. Jones, Jr., "Sensitive Monitoring of Aromatic Acids After Anion Exchange Chromatography of Body Fluids," presented at the Fifth Annual Symposium on Advanced Analytical Concepts for the Clinical Laboratory, Mar. 15–16, 1973, ORNL.

Mailen, J. C., J. B. Overton, C. A. Burtis,[1] and C. D. Scott, "Techniques for Fabrication and Assembly of Rotors for Use in a Miniature Fast Analyzer," *Anal. Lett.* **6**, 252 (1973).

Mrochek, J. E., S. R. Dinsmore, and D. W. Ohrt, "Application of the UV-Analyzer to Investigation of Abnormalities in Phenylalanine, Tyrosine, and Tryptophan Metabolism in Humans," presented at the Fifth Annual Symposium on Advanced Analytical Concepts for the Clinical Laboratory, ORNL, Mar. 15–16, 1973.

Mrochek, J. E., and W. T. Rainey, Jr.,[4] "Identification and Biochemical Significance of Substituted Furans in Human Urine," *Clin. Chem.* **18**, 821–22 (1972).

Pearson, R. L., C. W. Hancher, J. F. Weiss, D. W. Holladay, and A. D. Kelmers, "Preparation of Crude tRNA and Chromatographic Purification of Five tRNAs from Calf Liver," *Biochim. Biophys. Acta* **294**, 236–49 (1973).

Pitt, W. W., Jr., "High Pressure High-Resolution Liquid Chromatography," presented at the St. Joseph Valley Section of the American Chemical Society, Elkhart, Ind., Oct. 12, 1972.

Pitt, W. W., Jr., "Parallel Fast Analyzers," presented at Ames Laboratory, Elkhart, Ind., Oct. 13, 1972.

Pitt, W. W., Jr., Sidney Katz, and L. H. Thacker,[2] "A Rapid, Sensitive Method for the Determination of the Chemical Oxygen Demand of Polluted Waters," presented at the 73rd National Meeting of the American Institute of Chemical Engineers, Minneapolis, Minn., Aug. 27–30, 1972.

Pitt, W. W., Jr., C. D. Scott, and Guy Jones, Jr., "Simultaneous Multicolumn Operation of the UV-Analyzer," *Clin. Chem.* **18**, 767–70 (1972).

Scott, C. D., "Automated, High-Resolution Analyses for the Clinical Laboratory by Liquid Column Chromatography," *Advan. Clinical Chem.* **15**, 1–41 (1972).

Scott, C. D., "Biomedical Engineering – Past, Present, and Future," presented at the Workshop on Biomedical Engineering, University of Tennessee Medical Units, Memphis, Tenn., Dec. 1, 1972.

Scott, C. D., "Development of High Resolution Liquid Chromatography for the Separation and Analysis of Complex Physiologic Fluids," presented at the Gordon Conference on Drug Metabolism, Plymouth, N.H., Aug. 4, 1972.

Scott, C. D., "Introduction to the Concepts and Development of the Centrifugal Fast Analyzer Systems," presented at the Gordon Conference on Drug Metabolism, Plymouth, N.H., Aug. 4, 1972.

Scott, C. D., "Requirements for an Economic Enzymatic Process for Hydrogen Production," presented at the Biological Energy Conversion Workshop, Gatlinburg, Tenn., Oct. 14, 1972.

Scott, C. D., "Role of the Chemical Engineer in Biology and Medicine," presented at the Western Kentucky Section of the American Institute of Chemical Engineers, Paducah, Ky., May 9, 1972.

Scott, C. D., and C. A. Burtis,[1] "Miniature Fast Analyzer Systems," *Anal. Chem.* **45**, 327 (1973).

Scott, C. D., and C. A. Burtis,[1] "Recent Advances in Fast Analyzer Technology," presented to the Biochemical Subsection of the Delaware Section of the American Chemical Society, Wilmington, Del., Nov. 15, 1972.

Scott, C. D., D. D. Chilcote, Sidney Katz, and W. W. Pitt, Jr., "Advances in the Application of High Resolution Liquid Chromatography to the Separation of Complex Biological Mixtures," *J. Chromatog. Sci.* **11**, 96–100 (1973).

---

4. Analytical Chemistry Division.

Scott, C. D., D. D. Chilcote, and J. E. Mrochek, "Advances in the Application of High Resolution Liquid Chromatography to the Separation of Complex Biological Fluids," presented at the American Chemical Society Meeting, New York City, Aug. 27, 1972.

Scott, C. D., N. E. Lee, and M. D. McBride, "Elution Electrophoresis as an Automated Analytical Tool," presented at the Fifth Annual Symposium on Advanced Analytical Concepts for the Clinical Laboratory, ORNL, Mar. 15–16, 1973.

Scott, C. D., and J. C. Mailen, "Dynamic Introduction of Whole-Blood Samples into Fast Analyzers," *Clin. Chem.* **18**, 749–52 (1972).

Scott, C. D., and R. S. Melville,[5] "Introduction. Fourth Annual Symposium on Advanced Analytical Concepts for the Clinical Laboratory," *Clin. Chem.* **18**, 743 (1972).

Scott, C. D., and W. W. Pitt, Jr., "Differential Chromatography Using Dual, Coupled Parallel Columns," presented at the 163rd National American Chemical Society Meeting, Boston, Mass., Apr. 9–13, 1972.

Scott, C. D., and W. W. Pitt, Jr., "Differential Chromatography Using Dual, Coupled Parallel Columns," *J. Chromatog. Sci.* **10**, 740 (1972).

Scott, C. D., and W. W. Pitt, Jr., "Use of Differential High-Resolution Liquid Chromatography for Studying Pathologic States on a Molecular Level," presented at the 24th National Meeting of the American Association of Clinical Chemists, Cincinnati, Ohio, Aug. 20–25, 1972.

Scott, C. D., and W. W. Pitt, Jr., "Use of Differential, High Resolution Liquid Chromatography for Studying Pathologic States on a Molecular Level," presented at the 3rd Annual Meeting of the Biomedical Engineering Society, Baltimore, Md., Apr. 8, 1972.

Tiffany,[1] T. O., "An Automated Single Reagent Method for the Determination of Total Bilirubin on the Fast Analyzer," presented at the Spring Meeting of the Southeastern Section of the American Association of Clinical Chemists, Nashville, Tenn., Apr. 20–22, 1972.

Tiffany,[1] T. O., "A Multi-Cuvet Fast Fluorometric Analyzer Based on the GeMSAEC Principle," presented at the 24th National Meeting of the American Association of Clinical Chemists, Cincinnati, Ohio, Aug. 20–25, 1972.

Tiffany,[1] T. O., "Biophysics, Biochemistry and Laboratory Medicine," presented at the Conference on the Future Goals in Training in Laboratory Medicine, Aspen, Colo., Sept. 1, 1972.

Tiffany,[1] T. O., "Kinetic Rate Analysis and End-Point Analysis of Substrate Using a GeMSAEC Fast Analyzer," presented at the Spring Meeting of the Southeastern Section of the American Association of Clinical Chemists, Nashville, Tenn., Apr. 20–22, 1972.

Tiffany,[1] T. O., "The Oak Ridge Fast Analyzer Program," presented at Barnes Medical Center, Washington University, St. Louis, Mo., June 1, 1972.

Tiffany,[1] T. O., D. D. Chilcote, and C. A. Burtis,[1] "The Determination of Kinetic Enzyme Parameters for General Clinical Use, Genetic Screening, and Biomedical Research Through Use of the Small-Computer-Interfaced Fast Analyzer," presented at the Fifth Annual Symposium on Advanced Analytical Concepts for the Clinical Laboratory, ORNL, Mar. 15–16, 1973.

Tiffany, T. O., J. M. Jansen,[2] C. A. Burtis, J. B. Overton, and C. D. Scott, "Enzymatic Kinetic Rate and End-Point Analyses of Substrate, Using a GeMSAEC Fast Analyzer," *Clin. Chem.* **18**, 829–40 (1972).

Tiffany,[1] T. O., M. B. Watsky,[1] and C. A. Burtis,[1] "The Potential Use of the Fluorometric Fast Analyzer for Enzymatic and Immunological Assays in the Clinical Laboratory," presented at the Fifth Annual Symposium on Advanced Analytical Concepts for the Clinical Laboratory, ORNL, Mar. 15–16, 1973.

Weeren, H. O., and A. D. Ryon, *Development of a Process for the Separation and Purification of Ten tRNAs from E. coli K-12 MO,* ORNL-TM-3704 (April 1972).

---

5. National Institute of General Medical Sciences, Bethesda, Md.

Weeren, H. O., A. D. Ryon, and A. D. Kelmers, "Purification of Ten Transfer Ribonucleic Acids from *E. coli* K-12 MO," *Biotechnol. Bioeng.* XIV(4), 617–27 (1972).

CHEMICAL ENGINEERING RESEARCH

Clinton, S. D., *Mass Transfer of Water from Single Aqueous Sol Droplets Fluidized in a Partially Miscible Alcohol,* ORNL-TM-3771 (July 1972).

Clinton, S. D., and M. E. Whatley, "Mass Transfer of Water from Single Thoria Sol Droplets Fluidized in 2-Ethyl-1-hexanol," *A.I.Ch.E. J.* **18**(3), 486–90 (1972).

Hannaford, B. A., C. W. Kee, J. S. Watson, and H. D. Cochran, Jr., "Hydrodynamics and Mass Transfer in Packed Columns," presented at the 72nd National Meeting of the American Institute of Chemical Engineers, St. Louis, Mo., May 21–24, 1972.

Watson, J. S., and L. E. McNeese, "Holdup, Flooding, and Pressure Drop in Packed Columns During Countercurrent Flow of Mercury and Water," *A.I.Ch.E. J.* **19**, 230 (1973).

CHEMICAL PROCESSING FOR MOLTEN-SALT REACTORS

Carter, W. L., and E. L. Nicholson, *Design and Cost Study of a Fluorination–Reductive Extraction–Metal Transfer Processing Plant for the MSBR,* ORNL-TM-3579 (March 1972).

Ferris, L. M., *Estimated Behavior of Titanium in MSBR Chemical Processing Systems,* ORNL-TM-3763 (April 1972).

Ferris, L. M., M. A. Bredig, and F. J. Smith, "Equilibrium Distribution of Lithium and Bismuth Between Liquid Li-Bi Alloys and Molten LiCl at 650 to 800°C," presented at the 164th National Meeting of the American Chemical Society, New York, N.Y., Aug. 27–Sept. 1, 1972.

Ferris, L. M., F. J. Smith, J. C. Mailen, and M. J. Bell,[6] "Distribution of Lanthanide and Actinide Elements Between Molten Lithium Halide Salts and Liquid Bismuth Solutions," *J. Inorg. Nucl. Chem.* **34**, 2921–33 (1972).

Hightower, J. R., Jr., M. J. Bell,[6] B. A. Hannaford, and L. E. McNeese, "Removal of Uranium from Molten Fluoride Mixtures," presented at the 72nd National Meeting of the American Institute of Chemical Engineers, St. Louis, Mo., May 21–24, 1972.

Hightower, J. R., and L. E. McNeese, "Relative Volatilities of Fluorides of Ce, La, Pr, Nd, Sm, Eu, Ba, Sr, Y, and Zr in Melts of LiF and LiF-BeF_2 at 1000°C," *J. Chem. Engr. Data* **17**(3), 342–3 (1972).

McNeese, L. E., L. M. Ferris, and E. L. Nicholson, "Molten-Salt Breeder Reactor Fuel Processing," presented at the 72nd National Meeting of the American Institute of Chemical Engineers, St. Louis, Mo., May 21–24, 1972.

McNeese, L. E., E. L. Youngblood, Jr., J. R. Hightower, Jr., and H. O. Weeren, "Removal of Rare Earths from Molten Fluoride Mixtures," presented at the 72nd National Meeting of the American Institute of Chemical Engineers, St. Louis, Mo., May 21–24, 1972.

Smith, F. J., "Mutual Interactions of Thorium, Lanthanides, and Bismuth in Th-Ln-Bi Solutions: Evidence for the Formation of $ThLnBi_y$ Compounds," *J. Less-Common Metals* **29**, 73–79 (1972).

Smith, F. J., "The Solubilities of Thorium and Samarium in Liquid Lithium-Lead Solutions," *J. Less-Common Metals* **32**, 297–300 (1973).

Tallent, O. K., and L. M. Ferris, "Equilibrium Precipitation of Protactinium Oxide from Molten LiF-BeF_2-ThF_4-UF_4-PaF_5 Mixtures," presented at the American Chemical Society Meeting, New York, N.Y., Aug. 28–Sept. 1, 1972.

6. AEC, Washington.

DEVELOPMENT OF THE THORIUM FUEL CYCLE

Glass, R. W., P. A. Haas, R. S. Lowrie, and M. E. Whatley, *HTGR Head-End Processing: A Preliminary Evaluation of Processes for Decontaminating Burner Off-Gas,* ORNL-TM-3527 (July 1972).

Glass, R. W., A. B. Meservey, P. A. Haas, J. W. Snider, K. J. Notz, M. E. Whatley, and R. S. Lowrie, "Removal of Krypton from the HTGR Fuel Reprocessing Burner Off-Gases," presented at the 18th Annual Meeting of the American Nuclear Society, Las Vegas, Nev., June 18–22, 1972; abstract published in *Trans. Am. Nucl. Soc.* **15**(1), 95 (1972).

Haas, P. A., *HTGR Fuel Development: Use of UO_3 to Load Cation Exchange Resin for Microsphere Preparation,* ORNL-TM-3817 (October 1972).

Haas, P. A., *Process Requirements for Preparing ThO_2 Spheres by the ORNL Sol-Gel Process,* ORNL-TM-3978 (December 1972).

Lowrie, R. S., C. L. Fitzgerald, and V. C. A. Vaughen, "Determination of the Radioactive Nuclides Present in the Off-Gas Stream Generated by the Head-End Steps in Reprocessing HTGR Type Fuels," presented at the 12th USAEC Air Cleaning Conference, Oak Ridge, Tenn., Aug. 28–30, 1972; to be published in the *Proceedings.*

Notz, K. J., and P. A. Haas, "Resin-Based Fuels for HTGRs. Part II – Uranium Loading of Resins," presented at the Joint Fall Meeting of the American Ceramic Society, Philadelphia, Penn., Sept. 24–27, 1972; abstract published in *Ceram. Bull.* **51**(8), 655 (1972).

Snider, J. W., and R. E. Leuze, "An Estimate of the Process Decontamination Factors Required to Meet Federal Effluent Regulations for the Burning of HTGR Fuel Elements," presented at the 12th USAEC Air Cleaning Conference, Oak Ridge, Tenn., Aug. 28–31, 1972; CONF-720823 (January 1973), Vol. II, pp. 501–26.

Whatley, M. E., R. W. Glass, P. A. Haas, A. B. Meservey, and K. J. Notz, "Decontamination of HTGR Reprocessing Off-Gases," presented at the 12th USAEC Air Cleaning Conference, Oak Ridge, Tenn., Aug. 28–31, 1972; CONF-720823, Vol. I (January 1973), pp. 86–99.

Wymer, R. G., "Elements of High-Temperature Gas-Cooled Reactor Fuel Reprocessing," presented at the Tennessee Industries Week, University of Tennessee, Knoxville, Sept. 11–15, 1972.

MISCELLANEOUS

Arnold, W. D., R. Salmon, K. H. Lin, and W. de Laguna, *Preliminary Evaluation of Methods for the Disposal of Tritiated Water from Nuclearly Stimulated Natural Gas Wells,* ORNL-TM-4024 (April 1973).

Alsmiller,[7] R. G., Jr., R. T. Santoro,[7] J. Barish,[7] and H. C. Claiborne, *Shielding of Manned Space Vehicle Against Protons and Alpha Particles,* ORNL-RSIC-35 (November 1972).

Brooksbank, R. E., "Nuclear Fuel Cycle," presented at the Energy Source for the Future Symposium, Oak Ridge Associated Universities, Oak Ridge, Tenn., Aug. 18, 1972.

Brooksbank, R. E., "The Nuclear Fuel Cycle," presented to the State Radiological Health Personnel, Oak Ridge Associated Universities, May 30, 1972.

Durham,[8] J. L., Jack Wagman,[8] B. R. Fish,[9] and F. G. Seeley, "Radiochemical Analysis of $^{35}SO_2$ Adsorbed on PbO_2," *Anal. Lett.* **5**(7), 469–78 (1972).

Forrester, R. L., III, and Scott Lynn,[10] "Production of HCl as a Byproduct of the Solvay Process," presented at the American Institute of Chemical Engineers Symposium, New York, N.Y., Nov. 26–30, 1972.

Fulkerson,[11] William, and H. E. Goeller (eds.), *Cadmium, the Dissipated Element,* ORNL-NSF-EP-21 (January 1973).

---

7. Neutron Physics Division.
8. National Environmental Research Center, U.S. Environmental Protection Agency, Research Triangle Park, N.C.
9. Health Physics Division.
10. Department of Chemical Engineering, University of California, Berkeley.
11. NSF Environmental Program.

Goeller, H. E., "An Optimistic Outlook for Mineral Resources," presented at:

1. National Commission on Materials Policy – University of Minnesota Forum on Scarcity and Growth: Towards a National Materials Policy, Minneapolis, Minn., June 22, 1972
2. 16th Annual Meeting of South Central Independent College Association of Chemists, Harrogate, Tenn., Oct. 6, 1972
3. Department of Metallurgical Engineering Colloquium, Ohio State University, Columbus, Oct. 13, 1972
4. U.S. Naval Reserve Meeting, Oak Ridge, Tenn., July 1972
5. Cowles Foundation for Research in Economics, Department of Economics, Yale University, New Haven, Conn., Mar. 1, 1973
6. Department of Chemical and Metallurgical Engineering, University of Tennessee, Knoxville, Mar. 5, 1973

Goeller, H. E., "The Ultimate Mineral Resource Situation – An Optimistic View," *Proc. Nat. Acad. Sci. U.S.* **69**(10), 2991–92 (1972).

Golan,[12] S., and Royes Salmon, "Nuclear Fuel Logistics," presented at the Atomic Industrial Forum, 1972 International Conference, Washington, D.C., Nov. 12–16, 1972.

Golan,[12] S., and Royes Salmon, "Nuclear Fuel Logistics," *Nucl. News* **16**(2), 47 (February 1973).

Handley,[4] T. H., and V. A. DeCarlo, "Mercury and Cadmium Determination in Water by Prompt (n,γ) Method – ^{252}Cf as the Neutron Source," *J. Radioanal. Chem.* **11**, 265–71 (1972).

Horton, R. W., and J. R. Parrott, *Criticality and Safety Analysis: Building 3100, A Storage Vault for Uranium and Plutonium,* ORNL-TM-3929 (February 1973).

Kappelmann, F. A., R. D. Baybarz, A. M. Rom, and R. L. Hickey, *Safety Analysis of the Alpha Isolation Laboratory, Building 3508,* ORNL-TM-3938 (January 1973).

Klima, B. B., and L. B. Shappert, *Analysis of the Oak Ridge National Laboratory Foamglas Shipping Container,* ORNL-TM-3468 (December 1972).

Klima, B. B., and L. B. Shappert, *Drop, Puncture, and Thermal Tests Performed on the Foamglas Shipping Container, DOT Special Permit No. 5795,* ORNL-TM-3713 (February 1972).

Lin, K. H., *Application of Ion Exchange Technique in Nuclear Power Plants (Preliminary Report),* ORNL-TM-3735 (March 1972).

Lin, K. H., "Application of Ion Exchange Technology in Nuclear Power Industry," presented to the USAEC Directorate of Licensing, Bethesda, Md., Jan. 16, 1973.

Lin, K. H., *Tritium Enrichment by Isotope Separation Technique – An Engineering Evaluation,* ORNL-TM-3976 (December 1972).

McDowell, W. J., and W. N. Tillery, "A Photographic Method for Producing True-Perspective, Three-Dimensional Plots," *J. Chem. Ed.* **50**, 143 (1973).

Perona,[13] J. J., *A Preliminary Design Study of a Low-Pressure Hyperfiltration Process for Pulp Mill Bleach Plant Effluent,*[14] ORNL-TM-3999 (March 1973).

Perona,[13] J. J., and R. S. Dillon,[15] "Multistage Hyperfiltration Plants for the Desalination of Brackish Waters," *Desalination* **11**, 149–63 (1972).

Rainey, R. H., *Laboratory Development of a Pressurized Cation Exchange Process for Removing the Daughters of ^{232}U from ^{233}U,* ORNL-4731 (December 1972).

---

12. Atomics International, Division of North American Rockwell Corporation.
13. Consultant, Department of Chemical Engineering, University of Tennessee.
14. Work performed under auspices of the ORNL-NSF Environmental Program.
15. AECOP.

Rainey, R. H., "The Preparation of a Master List of Chemicals Used in Cooling Towers for Use in Preparation of Environmental Impact Statements," presented at the Annual Cooling Tower Institute Meeting, Houston, Tex., Jan. 29–31, 1973.

Salmon, Royes, *User's Manual for REFCO, A Discounted Cash Flow Code for Calculating Nuclear Fuel Cycle Costs,* ORNL-TM-3709 (April 1972).

Sturm, B. J., and C. T. Butler,[16] "Reactions Occurring During Carbon-Arc Melting of Magnesium Oxide," *J. Tenn. Acad. Sci.* **48**, 15–17 (1973).

Sturm, B. J., R. B. Quincy, Jr.,[4] and C. T. Butler,[16] "Preparation of High Purity Magnesium Oxide Powder of High Bulk Density," *Am. Ceram. Soc. Bull.* **51**(6), 529–31 (1972).

Watson, J. S., *An Evaluation of Methods for Recovering Tritium from the Blankets of Coolant Systems of Fusion Reactors,* ORNL-TM-3794 (July 1972).

Watson, J. S., *A Summary of Tritium Handling Problems in Fusion Reactors,* ORNL-TM-4022 (November 1972).

Watson, J. S., "Fusion Reactor," presented at the Nuclear Reactor Symposium, North Little Rock, Ark., Jan. 4–6, 1973.

Wymer, R. G., "Nuclear Fuel Cycles: A Summary Review," presented at Lowell Technological Institute, Lowell, Mass., May 11, 1972.

PATENTS

Bell, M. J., and M. E. Whatley, "Method for Preparing High-Purity Uranium-233," U.S. Patent 3,714,322 (Jan. 30, 1973).

Campbell, D. O., "Isotope Enrichment Process for Lanthanide and Actinide Elements," U.S. Patent 3,708,392 (Jan. 2, 1973).

Ferguson, D. E., and L. E. McNeese, "Method for Reprocessing Spent Molten Salt Reactor Fuels," U.S. Patent 3,672,846 (June 27, 1972).

Harrington, F. E., and J. D. Sease,[17] "Method of Vibratory Loading Nuclear Fuel Elements," U.S. Patent 3,683,975 (Aug. 15, 1972).

Hurst, F. J., and D. J. Crouse, "Reductive Stripping Process for the Recovery of Uranium from Wet-Process Phosphoric Acid," U.S. Patent 3,711,591 (Jan. 16, 1973).

Irvine, A. R., "Impact Energy Absorber," U.S. Patent 3,675,746 (July 11, 1972).

Lin, K. H., "Process for Decontamination of Neutron-Irradiated Beryllium," U.S. Patent No. 3,716,616 (Feb. 13, 1973).

Lloyd, M. H., O. K. Tallent, and R. E. Leuze, "Solvent Extraction Process for Producing Low-Nitrate and Large-Crystal Size PuO_2 Sols," U.S. Patent 3,715,317 (Feb. 6, 1973).

Sturm, B. J., and W. W. Parkinson,[9] "Radiation-Resistant Plastic Insulators," U.S. Patent 3,663,504 (May 16, 1972).

Sturm, B. J., R. B. Quincy, Jr.,[4] and C. T. Butler,[16] "Process for Preparing Calcined Oxides," U.S. Patent 3,711,600 (Jan. 26, 1973).

Tallent, O. K., "Method for Preparing Stable Urania-Plutonia Sols," U.S. Patent 3,714,056 (Jan. 30, 1973).

Whatley, M. E., "Method for Reprocessing Molten Fluoride Salt Reactor Fuels," U.S. Patent 3,677,719 (July 19, 1972).

16. Dept. of Physics, Oklahoma State University, Stillwater.
17. Metals and Ceramics Division.

POWER REACTOR FUEL PROCESSING

Clinton, S. D., and R. L. Cox, *The Effective Thermal Conductivity of Sheared Prototype LMFBR Fuels,* ORNL-TM-3772 (February 1973).

Devan,[17] J. H., T. M. Kegley, Jr.,[17] and A. R. Irvine, *Investigation of the Causes of Failure of Tubes in a Simulated LMFBR Fuel Subassembly,* ORNL-TM-3981 (October 1972).

Ferguson, D. E., and A. L. Lotts,[17] "Fast Reactor Fuel Processing," presented at the 1972 International American Nuclear Society Meeting, Washington, D.C., Nov. 12–17, 1972; abstract published in *Trans. Am. Nucl. Soc.* **15**(2), 597–98 (1972).

Goode, J. H., *Voloxidation – Removal of Volatile Fission Products from Spent LMFBR Fuels,* ORNL-TM-3723 (January 1973).

Goode, J. H., and S. D. Clinton, *Aqueous Processing of LMFBR Fuels – Technical Assessment and Experimental Program Definition, Sections 4.4 and 5.4,* ORNL-4436, Suppl. 1 (June 1972).

Goode, J. H., and V. C. A. Vaughen, "Fuel Reprocessing Tests with Short-Cooled LMFBR-Type Fuel Rods," presented at the 18th Annual Meeting of the American Nuclear Society, Las Vegas, Nev., June 18–22, 1972; abstract published in *Trans. Am. Nucl. Soc.* **15**(1), 87 (1972).

Groenier, W. S., *Calculation of the Transient Behavior of a Dilute-Purex Solvent Extraction Process Having Application to the Reprocessing of LMFBR Fuels,* ORNL-4746 (April 1972).

Haas, Paul A., *LMFBR Fuel Materials Conversion Development: A Partial Technical Evaluation,* ORNL-TM-3071 (May 1972).

Shappert, L. B., "Shipment of Radioactive Material," presented at the 72nd National Meeting of the American Institute of Chemical Engineers, St. Louis, May 21–24, 1972; to be published in the Chemical Engineering Progress Symposium Series.

Shappert, L. B., "Shipment of Radioactive Materials," presented at the O.R.A.U. Summer Training Program, Oak Ridge, Tenn., July 26, 1972.

Shappert, L. B., "Shipping Spent Fuel and Waste," presented at the O.R.A.U. Conference on Energy Sources for the Future, Oak Ridge, Tenn., Aug. 31, 1972.

Yarbro, O. O., J. P. Nichols, and W. E. Unger, "Environmental Protection During Fuel Processing," presented at the 72nd National Meeting of the American Institute of Chemical Engineers, St. Louis, Mo., May 21–24, 1972.

PROGRESS REPORTS

Arnold, W. D., and D. J. Crouse, *Chemical Applications of Nuclear Explosions (CANE): Progress Report for July 1 to December 31, 1971,* ORNL-TM-3760 (March 1972).

Boch,[18] A. L., J. O. Blomeke, W. C. McClain, and B. F. Bottenfield, *Radioactive Waste Repository Project Annual Progress Report for Period Ending September 30, 1972,* ORNL-4824 (December 1972).

Burch, W. D., J. E. Bigelow, and L. J. King, *Transuranium Processing Plant Semiannual Report of Production, Status, and Plans for Period Ending December 31, 1971,* ORNL-4767 (May 1972).

Burtis,[1] C. A., J. C. Mailen, W. F. Johnson,[2] C. D. Scott, and T. O. Tiffany,[1] *Gravity Zero (GΦ) Analytical Clinical Laboratory System Progress Report for the Period April 15 to July 31, 1972,* ORNL-TM-3948 (October 1972).

Burtis,[1] C. A., J. C. Mailen, W. F. Johnson,[2] C. D. Scott, T. O. Tiffany,[1] and M. B. Watsky,[1] *Gravity Zero (GΦ) Analytical Clinical Laboratory System Progress Report for the Period August 1 to October 31, 1972,* ORNL-TM-4027 (February 1973).

---

18. Director's Division.

Burtis,[1] C. A., J. C. Mailen, C. D. Scott, W. F. Johnson,[2] T. O. Tiffany,[1] and J. B. Overton, *Gravity Zero (GΦ) Analytical Clinical Laboratory System Annual Progress Report for the Period April 1,1971, to March 31, 1972,* ORNL-TM-3792 (July 1972).

King, L. J., J. E. Bigelow, and E. D. Collins, *Transuranium Processing Plant Semiannual Report of Production, Status, and Plans for Period Ending June 30, 1972,* ORNL-4833 (January 1973).

McNeese, L. E., *Engineering Development Studies for Molten-Salt Breeder Reactor Processing No. 8,* ORNL-TM-3258 (May 1972).

Staffs of the Chemical Technology and the Metals and Ceramics Divisions, *LMFBR Fuel Cycle Studies Progress Report for February 1972, No. 36,* ORNL-TM-3759 (March 1972).

Staffs of the Chemical Technology and the Metals and Ceramics Divisions, *LMFBR Fuel Cycle Studies Progress Report for March 1972, No. 37,* ORNL-TM-3807 (April 1972).

Staffs of the Chemical Technology and the Metals and Ceramics Divisions, *LMFBR Fuel Cycle Studies Progress Report for April 1972, No. 38,* ORNL-TM-3823 (May 1972).

Staffs of the Chemical Technology and the Metals and Ceramics Divisions, *LMFBR Fuel Cycle Studies Progress Report for May 1972, No. 39,* ORNL-TM-3888 (June 1972).

Staffs of the Chemical Technology and the Metals and Ceramics Divisions, *LMFBR Fuel Cycle Studies Progress Report for June 1972, No. 40,* ORNL-TM-3924 (August 1972).

Staff of the Chemical Technology Division, *LMFBR Fuel Cycle Studies Progress Report for July 1972, No. 41,* ORNL-TM-3952 (September 1972).

Staff of the Chemical Technology Division, *LMFBR Fuel Cycle Studies Progress Report for August 1972, No. 42,* ORNL-TM-3993 (October 1972).

Staff of the Chemical Technology Division, *LMFBR Fuel Cycle Studies Progress Report for September 1972, No. 43,* ORNL-TM-4016 (November 1972).

Staff of the Chemical Technology Division, *Aqueous Fuel Reprocessing Quarterly Report for Period Ending December 31, 1972,* ORNL-TM-4141 (April 1973).

SEPARATIONS CHEMISTRY

Bell, J. T., "Ionic and Polymeric Plutonium in Aqueous HNO_3," presented at Memphis State University, Memphis, Tenn., Feb. 16, 1973.

Bell, J. T., C. F. Coleman, D. A. Costanzo,[4] and R. E. Biggers,[19] "Plutonium Polymerization – III. The Nitrate Precipitation of Pu(IV) Polymer," *J. Inorg. Nucl. Chem.* **35**(2), 629–32 (1973).

Bell, J. T., D. A. Costanzo,[4] and R. E. Biggers,[19] "Plutonium Polymerization – II. Kinetics of the Plutonium Polymerization," *J. Inorg. Nucl. Chem.* **35**(2), 623–28 (1973).

Campbell, D. O., "Lanthanide and Actinide Separations Using Pressurized Ion Exchange Chromatography," presented at Vanderbilt University, Nashville, Tenn., Oct. 12, 1972, and at Memphis State University, Memphis, Tenn., Oct. 13, 1972.

Costanzo,[4] D. A., R. E. Biggers,[19] and J. T. Bell, "Plutonium Polymerization – I. A Spectrophotometric Study of the Polymerization of Plutonium(IV)," *J. Inorg. Nucl. Chem.* **35**(2), 609–22 (1973).

Friedman, H. A., and J. T. Bell, *A Search for Laser Phenomena in the Actinides: Studies of Investigations of Am^{3+} in Liquid $POCl_3$*, ORNL-TM-3728 (April 1972).

Friedman, H. A., and J. T. Bell, "A Search for Laser Phenomena in the Actinides: Studies of Am^{3+} in Liquid $POCl_3$," *J. Inorg. Nucl. Chem.* **34**, 3928 (1972).

19. Coca-Cola Research Laboratory, Atlanta, Ga.

Friedman, H. A., J. R. Stokely,[4] and R. D. Baybarz, "Polarographic Evidence for the Divalent Oxidation State of Californium," *Inorg. Nucl. Chem. Lett.* **8**(5), 433–41 (1972).

McDowell, W. J., and C. F. Coleman, "The Sulfate Complexes of Some Trivalent Transplutonium Actinides and Europium," *J. Inorg. Nucl. Chem.* **34**, 2837–50 (1972).

Harmon,[20] H. D., W. J. McDowell, J. R. Peterson,[13] and C. F. Coleman, "The Tetrad Effect: The Thiocyanate Complex Stability Constants of Some Trivalent Actinides," *J. Inorg. Nucl. Chem.* **34**, 1381–97 (1972).

Harmon,[20] H. D., J. R. Peterson,[13] J. T. Bell, and W. J. McDowell, "A Spectrophotometric Study of the Formation of Americium Thiocyanate Complexes," *J. Inorg. Nucl. Chem.* **34**, 1711–19 (1972).

SOL-GEL PROCESSES

Finney, B. C., and P. A. Haas, *Sol-Gel Process – Engineering-Scale Demonstration of the Preparation of High-Density UO_2 Microspheres,* ORNL-4802 (December 1972).

Lloyd, M. H., and O. K. Tallent, "A New Solvent Extraction Process for Preparation of PuO_2 Sols," presented at the 18th Annual Meeting of the American Nuclear Society, Las Vegas, Nev., June 18–22, 1972; abstract published in *Trans. Am. Nucl. Soc.* **15**(1), 230–31 (1972).

THESIS

Clinton, S. D., *Mass Transfer of Water from Single Aqueous Sol Droplets Fluidized in a Partially Miscible Alcohol,* Ph.D. dissertation, University of Tennessee, Knoxville, June 1972.

TRANSURANIUM ELEMENT PROCESSING

Baybarz, R. D., "The Preparation and Crystal Structures of Americium Dichloride and Dibromide," *J. Inorg. Nucl. Chem.* **35**(2), 483–87 (1973).

Baybarz, R. D., and H. L. Adair,[21] "Preparation of the High Temperature Form of Curium Metal," *J. Inorg. Nucl. Chem.* **34**(10), 3127–30 (1972).

Baybarz, R. D., L. B. Asprey,[22] C. E. Strouse,[22] and E. Fukushima,[22] "Divalent Americium: The Crystal Structure and Magnetic Susceptibility of AmI_2," *J. Inorg. Nucl. Chem.* **34**(11), 3427–31 (1972).

Baybarz, R. D., and R. G. Haire, "The Microchemistry of Californium and Einsteinium," presented at the Symposium on the Chemistry of Transuranium Elements, USSR Academy of Sciences, Institute of Physical Chemistry, Moscow, USSR, Sept. 4–8, 1972.

Baybarz, R. D., J. B. Knauer, and P. B. Orr, *Final Isolation and Purification of the Transplutonium Elements from the Twelve Campaigns Conducted at TRU During the Period August 1967–December 1971,* ORNL-4672 (April 1973).

Ferguson, D. E., and W. H. Hale, Jr.,[23] "Separation of the Transuranium Elements by Ion Exchange," presented at the Symposium on the Chemistry of Transuranium Elements, USSR Academy of Sciences, Institute of Physical Chemistry, Moscow, USSR, Sept. 4–8, 1972.

Haire, R. G., and R. D. Baybarz, "Identification and Analysis of Einsteinium Sesquioxide by Electron Diffraction," *J. Inorg. Nucl. Chem.* **35**(2), 489–96 (1973).

Peterson, J. R.,[24] and R. D. Baybarz, "The Stabilization of Divalent Californium in the Solid State: Californium Dibromide," *Inorg. Nucl. Chem. Lett.* **8**(4), 423–31 (1972).

---

20. Dept. of Chemistry, Walters State Community College, Morristown, Tenn.
21. Isotopes Division.
22. Los Alamos Scientific Laboratory, Los Alamos, N.M.
23. Savannah River Laboratory.
24. Department of Chemistry, University of Tennessee, Knoxville.

WASTE TREATMENT AND DISPOSAL

Blomeke, J. O., "Radioactive Waste Management," presented at the College of William and Mary, Williamsburg, Va., Oct. 25, 1972; at Virginia Polytechnic Institute, Blacksburg, Feb. 19, 1973; and at the University of Detroit Detroit, Mich., Apr. 6, 1973.

Cheverton, R. D., and W. D. Turner,[25] *Thermal Analysis of the National Radioactive Waste Repository: Progress Through March 1972,* ORNL-4789 (September 1972).

Cheverton, R. D., and W. D. Turner,[25] "Thermal Considerations in the Design of the National Radioactive Waste Repository," *Power Engr.* **76**(4), 48–51 (1972).

Claiborne, H. C., "High-Level Radioactive Waste Disposal by Transmutation," presented at the 18th Annual Meeting of the American Nuclear Society, Las Vegas, Nev., June 18–22, 1972; abstract published in *Trans. Am. Nucl. Soc.* **15**(1), 91–92 (1972).

Claiborne, H. C., *Neutron-Induced Transmutation of High-Level Radioactive Waste,* ORNL-TM-3964 (December 1972)

Frederick, E. J., "The Burial of Radioactive Waste in Salt," presented at the Topical Meeting on Advances in Remote Operations in the Nuclear Industry, Idaho Falls, Idaho, Sept. 19–21, 1972.

Godbee, H. W., *Spontaneous Combustion, Oxidation, and Pyrolysis of Combustible Solid Wastes Containing Transuranium Elements in Combustible and Noncombustible Containers,* ORNL-4768 (May 1972).

Harrington, F. E., and J. M. Holmes, *Design Study – New ORNL Process Waste Treatment Plant,* ORNL-TM-3522 Rev. (August 1972).

Holmes, J. M., and F. E. Harrington, "Process Selection for the Removal of Radionuclides from Low-Level Wastes at Oak Ridge National Laboratory," presented at the 73rd National Meeting of the American Institute of Chemical Engineers, Water Pollution Control Session, Minneapolis, Minn., Aug. 27–30, 1972.

Lomenick, T. F., *Implications of the American Salt Corporation's Underground Workings on the Proposed Federal Waste Repository at Lyons, Kansas,* ORNL-TM-3903 (August 1972).

Perona,[13] J. J., and J. O. Blomeke, "Air-Cooled Concrete Vaults for the Storage of High-Level Solidified Wastes," presented at the 1972 International American Nuclear Society Meeting, Washington, D.C., Nov. 12–17, 1972; abstract published in *Trans. Am. Nucl. Soc.* **15**(2), 664–65 (1972).

Perona,[13] J. J., and J. O. Blomeke, *A Preliminary Study of the Storage of Solidified High-Level Radioactive Wastes in Concrete Vaults,* ORNL-TM-3878 (August 1972).

Ulrich, W. C., *Plutonium Burning Program Status Report,* ORNL-TM-3799 (July 1972).

SEMINARS

1972

April 5	Isotopic Enrichment from Irradiation of Actinide/Lanthanide Zeolite	D. O. Campbell
April 12	HTGR Head-End Studies: Decontamination of Burner Off-Gas	R. W. Glass
April 18	Safety and Environmental Impact in Shipping of Radioactive Materials	J. P. Nichols
April 26	Defining Molecular Pollutants in Water	S. Katz R. L. Jolley
May 3	Recovery of Erythropoietin from Blood Plasma	C. W. Hancher A. D. Kelmers

25. Mathematics Division.

May 15	Head-End Processing of LMFBR Fuel:	
	Disassembly and Shearing	G. A. West
	Voloxidation	S. D. Clinton
May 24	Alternative Methods for Management and Disposal of Radioactive Wastes	H. C. Claiborne
June 7	Design Concepts for a Near Zero Emission Fuel Reprocessing Facility	O. O. Yarbro
November 8	Work Experience at the Swiss Federal Research Institute	W. D. Bond
November 15	Hydrogen and Other Synthetic Fuels	J. W. Michel[26]
November 29	Vapor-Liquid Distribution of Krypton and Xenon in CO_2	K. J. Notz
December 6	Development of Continuous Fluorinators Having Frozen-Wall Corrosion Protection	J. R. Hightower
January 3	Thermal Conductivity of Sheared Prototype LMFBR Fuel	S. D. Clinton H. W. Godbee
January 10	Reductive Extraction Studies Using Molten Salt and Bismuth in a Packed Column	B. A. Hannaford
January 17	Chemical and Crystallographic Studies of Some Actinides and Lanthanides	R. G. Haire
January 24	Recent Developments in Gas-Cooled Reactors and the ORNL Thorium Fuel Cycle Program	P. R. Kasten[27]
	Engineering Studies of Whole-Block Burners for HTGR Reprocessing	H. Barnert-Wiemer[28]
February 7	Treatment of Liquid Radioactive Wastes from Nuclear Power Reactor and Research Institutions:	
	Evaporation	H. W. Godbee
	Ion Exchange	K. H. Lin
February 14	Problems in Treating NFS Reprocessing Plant Wastes	D. O. Campbell L. J. King
February 21	Scrubbing Radioiodine from Process Off-Gases with Concentrated Nitric Acid (Iodex Process)	G. I. Cathers W. S. Groenier
February 28	Volatilization of Iodine from Nitric Acid Solutions	G. I. Cathers
	Scrubbing Radioiodine from Process Off-Gases with Mercuric Nitrate Solutions	D. J. Crouse
March 7	MSBR Processing Studies:	
	Chemistry of Fuel Reconstitution	M. R. Bennett
	Protactinium Removal by Oxide Precipitation	O. K. Tallent
March 14	Recent Processing Campaign with Short-Cooled LMFBR Fuel Specimens	J. H. Goode C. L. Fitzgerald
March 21	Clean Fuels from Coal	J. M. Holmes R. Salmon
March 28	Hot-Cell Studies of HTGR Reprocessing	R. S. Lowrie

26. Reactor Division.
27. Thorium Utilization Program.
28. Guest scientist from West Germany.

CHEMICAL TECHNOLOGY DIVISION

MARCH 31, 1973

D. E. FERGUSON, DIRECTOR
K. B. BROWN, ASSISTANT DIRECTOR
ALICE McWILLIAMS, SECRETARY
JUNE REDMOND, SECRETARY
J. B. RUCH, RADIATION AND SAFETY CONTROL OFFICER
A. T. GRESKY, SPECIAL ASSIGNMENT
MARTHA STEWART, REPORTS EDITOR

H. B. GRAHAM, ADMINISTRATIVE ASSISTANT
LUCILLE KUYKENDALL, SECRETARY
W. O. GREEVER,[1] PROCUREMENT

LONG RANGE PLANNING COMMITTEE

J. P. NICHOLS, CHAIRMAN
M. J. BELL
R. D. CHEVERTON[2]
H. C. CLAIBORNE
O. L. CULBERSON[3]
W. DAVIS, JR.
V. A. DeCARLO
D. S. JOY
M. E. LaVERNE[2]
K. H. LIN
J. T. ROBERTS[4]
R. SALMON
H. F. SOARD
IMOGENE LOOPE, SECRETARY
P. P. HAYDON, TECHNICIAN[5]

CHEMICAL DEVELOPMENT SECTION A

R. G. WYMER, SECTION CHIEF
R. E. LEUZE,[6] ASSISTANT SECTION CHIEF
C. F. COLEMAN, ASSISTANT SECTION CHIEF
JEWELL ELLIS, SECRETARY
JANE POSEY,[6] SECRETARY
TECHNICIAN: C. F. KECK

FUEL CYCLE STUDIES

K. J. NOTZ, GROUP LEADER
A. B. MESERVEY
TECHNICIAN: C. W. GREENE

SEPARATIONS CHEMISTRY RESEARCH FUNDAMENTAL CHEMISTRY

W. J. McDOWELL, PROBLEM LEADER
J. W. RODDY,[26] PROBLEM LEADER
TECHNICIANS: G. N. CASE
J. E. THOMPSON[6]

B. WEAVER, GROUP LEADER, SEPARATIONS RESEARCH
R. R. SHOUN

ACTINIDE SEPARATIONS AND ANALYSIS

D. O. CAMPBELL, PROBLEM LEADER

TRANSURANIUM ELEMENT PROCESSING

W. D. BOND, GROUP LEADER, TRU PROCESS DEVELOPMENT AND FINAL SEPARATIONS
S. R. BUXTON[6]
J. W. CHILTON[7]
J. B. KNAUER
M. L. LLOYD[4]
P. B. ORR
TECHNICIANS: L. A. BYRD
E. C. HENDREN[8]
C. H. JONES
A. S. LYLE
S. A. McCOSH

R. D. BAYBARZ,[4] GROUP LEADER, TRU RESEARCH
F. A. KAPPELMANN
H. A. FRIEDMAN[10]
B. J. STURM[11,26]

TECHNICIANS: R. L. HICKEY
J. T. WIGGINS

R. G. HAIRE, PROBLEM LEADER, ELECTRON MICROSCOPY, DTA, TGA
TECHNICIAN: D. H. NEWMAN

ACTINIDE OXIDES AND COLLOID SYSTEMS

I. L. THOMAS
J. P. McBRIDE, GROUP LEADER, SURFACE AND INTERFACE STUDIES
L. E. MORSE

ACTINIDE ELEMENT SPECTROPHOTOMETRY

J. T. BELL, PROBLEM LEADER
S. R. BUXTON[6]
TECHNICIAN: D. M. HELTON

BIOCHEMICAL SEPARATIONS

A. D. KELMERS, GROUP LEADER
B. Z. EGAN
R. L. PEARSON
J. F. WEISS
TECHNICIANS: J. P. EUBANKS
D. E. HEATHERLY

BIOCHEMICAL TECHNOLOGY

C. D. SCOTT, GROUP LEADER, BIOCHEMICAL TECHNOLOGY
J. C. MAILEN
M. D. McBRIDE
TECHNICIANS: N. E. LEE
J. B. OVERTON

J. E. MROCHEK, GROUP LEADER, BFA CHEMICAL IDENTIFICATION AND APPLICATIONS
D. D. CHILCOTE
S. R. DINSMORE

W. W. PITT, GROUP LEADER, BFA SYSTEMS DEVELOPMENT: POLLUTION
R. L. JOLLEY
S. KATZ
TECHNICIANS: G. JONES, JR.
J. E. THOMPSON[6]

CHEMICAL DEVELOPMENT SECTION B

R. E. BLANCO, SECTION CHIEF
D. J. CROUSE,[13] ASSISTANT SECTION CHIEF
L. M. FERRIS,[13] ASSISTANT SECTION CHIEF
SUE DAMEWOOD, SECRETARY
JO DeCARLO, SECRETARY

RADIOACTIVE WASTE STUDIES

H. W. GOODBEE, GROUP LEADER, CHARACTERIZATION OF SOLID PLUTONIUM-BEARING WASTES AND SOLIDIFIED HIGH-LEVEL WASTES

CHARACTERIZATION OF EVAPORATORS FOR RADIOACTIVE WASTES
TECHNICIANS: J. R. COLLINS[13]
R. C. LOVELACE[13]

W. E. CLARK, GROUP LEADER, COMBUSTION OF PLUTONIUM-BEARING SOLID WASTES

POWER REACTOR FUEL PROCESSING

J. H. GOODE,[13] GROUP LEADER, FLOWSHEET DEMONSTRATION ON RADIOACTIVE LMFBR, HTGR, AND LWR FUEL PROCESSING
C. L. FITZGERALD
V. C. A. VAUGHEN[9]
TECHNICIANS: G. D. DAVIS
O. L. KIRKLAND

L. M. FERRIS,[13] GROUP LEADER, MOLTEN SALT REACTOR FUEL PROCESSING
M. R. BENNETT
O. K. TALLENT
TECHNICIAN: C. T. THOMPSON

R. H. RAINEY, GROUP LEADER, SOLVENT EXTRACTION AND FUEL DISSOLUTION IN LMFBR FUEL PROCESSING AND ENVIRONMENTAL STUDIES
D. E. HORNER
TECHNICIANS: J. R. COLLINS[13]
R. C. LOVELACE[13]

G. I. CATHERS, GROUP LEADER, IODINE RETENTION IN LMFBR FUEL PROCESSING
A. H. KIBBEY
TECHNICIANS: C. J. SHIPMAN
W. E. SHOCKLEY

TRITIUM SEPARATION TECHNOLOGY

L. M. FERRIS,[13] GROUP LEADER, CTR SUPPORTIVE RESEARCH
F. J. SMITH
TECHNICIAN: J. F. LAND

SEPARATIONS PROCESSES RESEARCH

D. J. CROUSE,[13] GROUP LEADER
F. J. HURST
F. G. SEELEY
TECHNICIAN: W. B. HOWERTON

RADIOIODINE CHEMISTRY

D. J. CROUSE,[13] GROUP LEADER
J. M. SCHMITT

PLOWSHARE PROGRAM

D. J. CROUSE[13]
W. D. ARNOLD

HYDROFRACTURE STUDIES

H. O. WEEREN, GROUP LEADER
J. G. MOORE

UNIT OPERATIONS SECTION

M. E. WHATLEY, SECTION CHIEF
A. D. RYON,[13] ASST. SECTION CHIEF
NANCY POPE, SECRETARY
JANICE SHANNON, SECRETARY
JAN SHAVER, SECRETARY

HTGR PROCESSING AND FUEL CYCLE STUDIES

P. S. HAAS, GROUP LEADER
H. BARNERT-WIEMER[27]
B. C. FINNEY
R. W. GLASS
C. C. HAWS, JR.
R. S. LOWRIE
TECHNICIANS: R. D. ARTHUR
K. LADD
D. A. McWHIRTER
C. H. TIPTON

MOLTEN SALT REACTOR PROCESSING

L. E. McNEESE, GROUP LEADER
M. J. BELL
W. L. CARTER[14]
H. D. COCHRAN, JR.
B. A. HANNAFORD
J. R. HIGHTOWER, JR.
C. W. KEE
J. A. KLEIN
R. B. LINDAUER
W. F. SCHAFFER, JR.[14]
O. D. SOOD[15]
H. O. WEEREN
W. M. WOODS
E. L. YOUNGBLOOD
TECHNICIANS: J. BEAMS
V. L. FOWLER
R. O. PAYNE
J. S. TAYLOR

BIOMEDICAL SEPARATIONS

A. D. RYON,[13] GROUP LEADER
C. W. HANCHER
D. W. HOLLADAY
TECHNICIANS: G. B. DINSMORE
E. R. JOHNS[16]
W. G. SISSON[17]

LMFBR FUEL PROCESSING

C. D. WATSON, GROUP LEADER
S. D. CLINTON
R. L. COX
W. S. GROENIER
G. A. WEST
TECHNICIANS: F. G. KILPATRICK
J. C. ROSE
D. E. SPANGLER[8]
D. E. WILLIS

CHEMICAL ENGINEERING RESEARCH

J. S. WATSON
R. C. FORRESTER
TECHNICIAN: F. L. ROGERS

PROCESS DESIGN SECTION

H. E. GOELLER,[13] SECTION CHIEF
W. E. UNGER, ASSISTANT SECTION CHIEF
J. B. RUCH,[18] BUILDING 4507 MODIFICATIONS
H. E. GOELLER,[13] MINERAL RESOURCE STUDIES
F. L. PEISHEL, TRANSURANIUM ASSISTANCE
L. B. SHAPPERT,[13] DIVISION QUALITY ASSURANCE PROGRAM
E. L. NICHOLSON, LMFBR ENGINEERING EXPERIMENT
J. M. HOLMES,[6] COAL EVALUATION STUDIES
MAY E. PEPPER, SECRETARY
MARY S. BROWN, SECRETARY
K. F. STOOKSBURY, CLERK

DRAFTSMEN

O. E. DUNNING,[19] DRAFTING SUPERVISOR
B. G. DeVALL
A. J. FARMER
G. K. FORD[19]
A. H. GREGORY[19]
B. F. HENRY[19]
J. W. KIDD[19]
J. R. McINTOSH[19]
R. P. OLIVER[19]
J. D. PHILLIPS[19]

SALT MINE REPOSITORY

J. O. BLOMEKE, GROUP LEADER
B. F. BOTTENFIELD, PROJECT ENGINEER
E. J. FREDERICK
W. C. McCLAIN
T. F. LOMENICK
F. M. EMPSON
R. D. CHEVERTON
F. GERA
M. J. KETELLE

WASTE STUDIES

J. J. PERONA,[3] CONSULTANT, THERMAL TRANSPORT
W. C. ULRICH, WET OXIDATION
W. de LAGUNA, HYDROFRACTURE
J. M. HOLMES,[6] LOW-LEVEL WASTE PLANT DESIGN

AQUEOUS LMFBR FUEL PROCESSING

A. R. IRVINE, GROUP LEADER
F. E. HARRINGTON, NOBLE GAS STUDIES
B. B. KLIMA, HEAT TRANSPORT TESTS
S. MANN, PLUTONIUM STUDIES
L. B. SHAPPERT,[13] FUEL TRANSPORT STUDIES
O. O. YARBRO, IODINE STUDIES

THORIUM UTILIZATION

J. W. SNIDER, GROUP LEADER
D. C. WATKIN,[19] MECHANICAL DESIGN

AEC ENVIRONMENTAL IMPACT REPORTS GROUP

W. G. STOCKDALE
F. N. BROWDER

PILOT PLANT SECTION

R. E. BROOKSBANK, SECTION CHIEF
R. E. LEUZE,[6] ASSISTANT SECTION CHIEF
J. P. PARROTT, ASSISTANT SECTION CHIEF
ROBBIE HOYLE, SECRETARY
BRENDA MOSES, SECRETARY
JANE POSEY,[17] SECRETARY
R. B. WATERS, DRAFTSMAN

TRANSURANIUM PROCESSING PLANT

L. J. KING, GROUP LEADER
J. E. RIGELOW, TRANSURANIUM MATERIAL COORDINATOR
E. D. COLLINS, TECHNICAL GROUP
F. R. CHATTIN, OPERATIONS
J. L. MATHERNE, ENGINEERING, PLANT SAFETY
J. E. VAN CLEVE,[22] TARGET FABRICATION
W. W. EVANS
F. L. PEISHEL[14]
C. L. SHEPHERD
L. C. WILLIAMS[12]

PROCESS SUPERVISORS

D. B. OWSLEY
R. C. SHIPWASH
B. J. STRADER[22]
C. E. WADDELL

TECHNICIANS

L. L. ALLEN[22]
W. J. BRYAN
E. W. BROWN
H. S. CALDWELL
E. B. CAGLE
J. H. GROOVER
M. C. HILL
C. W. HOLLAND[22]
W. JENNINGS, JR.[22]
R. R. LAXSON
R. E. POTTER[22]
C. E. ROBERTS
O. W. SCATES
W. M. SPROULE
H. C. THOMPSON
A. V. WILDER
G. E. WOODALL

RADIOCHEMICAL OPERATIONS

J. R. PARROTT,[6] GROUP LEADER, LWBR SUPPORT, ^{233}U DISPENSING
W. T. McDUFFEE, TECHNICAL GROUP
R. W. HORTON, SAFETY ANALYSIS
R. G. NICOL, PLANT OPERATIONS
E. L. YOUNGBLOOD, OXIDE LINE OPERATIONS
W. R. WHITSON, IN-PLANT ENGINEERING
F. L. DALEY, PURIFICATION SYSTEMS
F. G. KITTS[24]
W. L. PATTISON
T. L. DOUGLASS
J. M. CHANDLER[24]

PROCESS SUPERVISORS

W. T. BOSTIC
C. W. MARTIN
R. J. SHANNON
W. A. SHANNON

TECHNICIANS

A. L. BEETS
C. W. BOATMAN
E. C. BRANTLEY
J. H. BROCK
G. D. DAVIS
D. M. HELTON
A. L. JOHNSON
W. A. LINDSEY
J. F. LOCKMILLER
R. E. PURKEY
S. E. SHELL
L. J. SHERSKY
J. F. TALLEY
J. H. WALKER

HOT CELL FACILITY

J. H. GOODE,[13] GROUP LEADER, PLANT SAFETY

[1] ON LOAN FROM PLANT AND EQUIPMENT DIVISION.
[2] ON LOAN FROM REACTOR DIVISION.
[3] CONSULTANT, U.T.
[4] LEAVE OF ABSENCE.
[5] ON LOAN TO Y-12.
[6] DUAL CAPACITY.
[7] ON LOAN TO ENVIRONMENTAL SCIENCES DIVISION.
[8] ON LOAN FROM CHEMICAL DEVELOPMENT SECTION B.
[9] ASSIGNED TO THIS PROBLEM BY THE ANALYTICAL CHEMISTRY DIVISION.
[10] ASSIGNED TO THE TRANSURANIUM RESEARCH LABORATORY.
[11] ON LOAN TO THERMONUCLEAR DIVISION.
[12] PRESENT ADDRESS, GGA, SAN DIEGO.
[13] DUAL CAPACITY.
[14] ON LOAN FROM PROCESS DESIGN SECTION.
[15] GUEST SCIENTIST FROM INDIA.
[16] ON LOAN FROM CHEMICAL DEVELOPMENT SECTION A.
[17] ON LOAN TO CHEMISTRY DIVISION.
[18] ON LEAVE TO UNIVERSITY OF TENNESSEE.
[19] ON LOAN FROM GENERAL ENGINEERING DIVISION.
[20] ON LOAN TO DIRECTOR'S DIVISION.
[21] ON LOAN FROM PERSONNEL DIVISION.
[22] ON LOAN FROM METALS AND CERAMICS DIVISION.
[23] ON LOAN FROM REACTOR OPERATIONS.
[24] AEC-DL ASSISTANCE.
[25] ON LOAN TO METALS AND CERAMICS DIVISION.
[26] ASSIGNED TO ENVIRONMENTAL SCHOOL FOR PORTION OF YEAR.
[27] GUEST SCIENTIST FROM WEST GERMANY.

ORNL-4883
UC-10 – Chemical Separations Processes for Plutonium and Uranium

INTERNAL DISTRIBUTION

1. Biology Library
2–4. Central Research Library
5. Laboratory Shift Supervisor
6–7. ORNL – Y-12 Technical Library Document Reference Section
8. MIT Practice School
9–28. Laboratory Records Department
29. Laboratory Records, ORNL R.C.
30. H. I. Adler
31. J. A. Auxier
32. R. D. Baybarz
33. S. E. Beall
34. D. S. Billington
35. R. E. Blanco
36. J. O. Blomeke
37. A. L. Boch
38. W. D. Bond
39. C. J. Borkowski
40. B. F. Bottenfield
41. G. E. Boyd
42. R. E. Brooksbank
43. R. B. Briggs
44. F. N. Browder
45. K. B. Brown
46. F. R. Bruce
47. D. O. Campbell
48. G. I. Cathers
49. J. M. Chandler
50. W. E. Clark
51. C. F. Coleman
52. W. C. Colwell
53. J. A. Cox
54. D. J. Crouse
55. F. L. Culler
56. J. E. Cunningham
57. W. Davis, Jr.
58–332. D. E. Ferguson
333. L. M. Ferris
334. R. C. Fuller
335. F. Gera
336. J. H. Gillette
337. H. W. Godbee
338. H. E. Goeller
339. H. B. Graham
340. A. T. Gresky
341. W. R. Grimes
342. P. A. Haas
343. J. P. Hammond
344. R. F. Hibbs
345. R. W. Horton
346. A. R. Irvine
347. R. L. Jolley
348–354. P. R. Kasten
355. M. A. Kastenbaum
356. M. T. Kelley
357. A. D. Kelmers
358. L. J. King
359. E. Lamb
360. R. E. Leuze
361. R. B. Lindauer
362. R. S. Livingston
363. M. H. Lloyd
364. R. A. Lorenz
365. F. C. Maienschein
366. A. P. Malinauskas
367. J. P. McBride
368. W. J. McDowell
369. L. E. McNeese
370. R. A. McNees
371. A. B. Meservey
372. J. P. Nichols
373. E. L. Nicholson
374. K. J. Notz
375. G. D. Novelli
376. R. B. Parker
377. J. R. Parrott
378. R. H. Rainey
379. M. E. Ramsey
380. J. T. Roberts
381. A. D. Ryon
382. C. D. Scott
383. H. E. Seagren
384. L. B. Shappert
385. M. J. Skinner
386. P. H. Stelson
387. M. G. Stewart
388. D. A. Sundberg
389. E. H. Taylor
390. J. R. Totter
391. D. B. Trauger
392. W. E. Unger
393. V. C. A. Vaughen

394. C. D. Watson
395. B. S. Weaver
396. A. M. Weinberg
397. J. R. Weir
398. J. C. White
399. M. K. Wilkinson
400. R. G. Wymer
401. E. L. Youngblood
402. J. C. Frye (consultant)
403. C. H. Ice (consultant)
404. J. J. Katz (consultant)
405. E. A. Mason (consultant)
406. Peter Murray (consultant)
407. R. B. Richards (consultant)

EXTERNAL DISTRIBUTION

408. J. L. Liverman, Atomic Energy Commission, Washington, D.C. 20545
409. D. F. Cope, RDT Site Office (ORNL)
410. Richard Hamburger, AEC, Washington
411. J. A. Swartout, 270 Park Avenue, New York 17, New York
412. Dr. Barendregt, c/o COMPRIMO, Europahuis, James Wattstraat 79, Amsterdam, Holland
413. Bruce Deering, Black and Veatch Consulting Engineers, 1500 Meadowlake Parkway, P.O. Box 8405, Kansas City, Missouri
414. Giacomo Calleri, Comitato Nazionale per l'Energia Nucleare, Programma EUREX, Saluggia (Vc), Italy
415. D. J. Carswell, Radiochemical Laboratory, The New South Wales University of Technology, P.O. Box 1, Kensington, Sydney, N.S.W., Australia
416. E. Cerrai, Laboratori CISE, Casella Postale N. 3986, Milano, Italy
417. David Dyrssen, The Royal Institute of Technology, Department of Inorganic Chemistry, Kemistragen 37, Stockholm 70, Sweden
418. Syed Fareeduddin, Indian Rare Earths Ltd., Army and Navy Building, 148 Mahatma Gandhi Road, Bombay 1, India
419. T. Ishihara, Division of Fuel Research and Development, Tokai Research Establishment, JAERI, Tokai-mura, Ibaraki-ken, Japan
420. A. S. Kertes, Hebrew University, Jerusalem
421. Jorgen Klitgaard, Atomic Energy Commission Res. Estab. Risö, Roskilde, Denmark
422. Y. Marcus, Israel Atomic Energy Commission, Tel Aviv, Israel
423. E. Glueckauf, Atomic Energy Research Establishment, Harwell, Berks, England
424. P. Regnaut, C.E.N. Fontenay-aux-Roses, Boite Postale No. 6, Fontenay-aux-Roses, Seine, France
425. A. J. A. Roux, Director of Atomic Energy Research, South African Council for Scientific and Industrial Research, Box 395, Pretoria, South Africa
426. Jan Rydberg, Department of Nuclear Chemistry, Chalmers Tekniska Hogskola, Gibraltargatan 5 H. Goteborg, Sweden
427. M. Shaw, AEC, Washington
428. Erik Svenke, Director, Department of Chemistry, Atomic Energy Company, Stockholm 9, Sweden
429. D. G. Tuck, Head, Department of Chemistry, University of Windsor, Windsor 11, Ontario
430. B. F. Warner, United Kingdom Atomic Energy Authority, Production Group, Windscale and Calder Works, Sellafield, Seascale, Cumberland, England
431. M. Zifferero, Comitato Nazionale per l'Energia Nucleare, Laboratorio Trattamento Elementi Combustibili, c/o Instituto di Chemica Farmaceutica e Tossicologica dell'Universita, Piazzale delle Scienze, 5, Rome, Italy
432. M. Claude Jean Jouannaud, Department Head, Plutonium Extraction Plant, Marcoule (Gard), France
433. Louis Gutierrez-Jadra, Director de Planta Pilotos e Industriales, Junta de Energia Nuclear, Ciudad Universitaris, Madrid (3), Spain
434. W. G. Belter, AEC, Washington
435. W. H. Regan, AEC, Washington
436. J. R. Peterson, Dept. of Chemistry, University of Tennessee, Knoxville, Tenn. 37916
437. George Duyckaerts, Institut de Chimie, University of Liege, Sart Tilman, 4000 Liege, Belgium
438. Atou Shimozato, Nuclear Reactor Design Section, Nuclear Power Plant Department, Hitachi Ltd., Hitachi Works, Hitachi-Shi, Ibaraki-Ken, Japan

439. R. S. Brodsky, Division of Naval Reactors, Atomic Energy Commission, Washington, D.C.
440. Theodore Rockwell III, Chairman AIF Safety Task Force, MPR Associates, Inc., 815 Connecticut Avenue, N.W., Washington, D.C.
441. Guenther Wirths, NUKEM, Hanau, Germany
442. Riki Kobayashi, Professor, Rice University, Houston, Tex. 77000
443. W. Pollard, Oak Ridge Associated Universities
444. Librarian, Department of Chemical Engineering and Chemical Technology, Imperial College, Prince Consort Road, London, S. W.7, England
445. Giuseppe Orsenigo, CNEN, Via Belisario 15, Rome, Italy
446. Werner Muller, European Transuranium Institute, Euratom, Postfach 2266, 75 Karlsruhe, West Germany
447. F. Baumgartner, Heidlberg University, Karlsruhe, Postfach 947, West Germany
448. Hugo Schumacher, Swiss Federal Institute for Reactor Research, Ch-5303 Wurenlingen, Switzerland
449. B. L. Vondra, NUMEC, Apollo, Pa.
450. W. H. McVey, AEC, Washington
451. E. E. Sinclair, AEC, Washington
452. A. R. Van Dyken, AEC, Washington
453. S. D. Goodman, Gilbert Associates, Inc., 525 Lancaster Avenue, Reading, Pa. 19603
454. Dr. Narayamam Srinivasan, Head of Fuel Reprocessing Division, Bhabha Atomic Research Center, Bombay 74, India
455. D. E. Bloomfield, Battelle Northwest, Richland, Washington
456. P. A. DeJonghe, Centre d'Etude de l'Energie Nucleaire, Mol, Belgium
457. T. W. McIntosh, Division of Reactor Development and Technology, USAEC, Washington, D.C.
458. R. E. Pahler, AEC, Washington
459. D. R. Miller, AEC, Washington
460. J. J. Fardy, Australian Atomic Energy Commission, Lucas Heights, Sydney, Australia
461. R. E. Norman, Gulf General Atomic, P.O. Box 608, San Diego, California
462. H. O. G. Witte, Julich Nuclear Research Center, Julich, Germany
463. Alfred Richard Boettcher, Director, Julich Nuclear Research Center, Julich, Germany
464. Julich Nuclear Research Center Library, Julich, Germany
465. Hans W. Levi, Deputy Director, Hahn – Meitner – Institut fur Kernforschung Berlin, Sektor Kernchemie, Glienicker Strasse 100, 1 Berlin 39, Germany
466. William J. Lacy, Chief, Industrial Pollution Control Branch, Division of Applied Science and Technology, Federal Water Pollution Control Administration, Department of the Interior, Washington, D.C.
467. C. Djordjevic, Chemistry Department, College of William and Mary, Williamsburg, Virginia
468. G. Spaepen, Head, Chemical Technology, SCK-CEN, Mol, Belgium
469. Ray W. Lambert, General Electric Company, Midwest Fuel Recovery Plant, Route 1, Box 219B, Morris, Ill. 60450
470. G. Rajan, Scientific Officer, Desalination and Effluent Engineering Division, Bhabha Atomic Research Centre, Bombay-85 AS, India
471. H. A. C. McKay, Atomic Energy Research Establishment, Applied Chemistry Division, Building 220, Harwell, Didcot, Berks, England
472. C. J. Hardy, Australian Atomic Energy Commission, Lucas Heights, Sydney, Australia
473. Jerrome Roth, Combustion Engineering, Inc., Prospect Hill Road, Windsor, Connecticut 06095
474. Harry D. Harmon, Savannah River Laboratory, E.I. du Pont de Nemours and Company, Aiken, South Carolina 29801
475. Research and Technical Support Division, ORO, AEC
476. Patent Office, AEC, ORO

477–584. Given distribution as shown in TID-4500 under Chemical Separations Processes for Plutonium and Uranium category (25 copies – NTIS)

☆U.S. GOVERNMENT PRINTING OFFICE: 1973-747-302/8