OAK RIDGE NATIONAL LABORATORY LIBRARIES
3 4456 0550108 9

ORNL-TM-4113

cy. 35

TEMPERATURE DISTRIBUTION IN A 19-ROD SIMULATED LMFBR FUEL ASSEMBLY IN A HEXAGONAL DUCT (FUEL FAILURE MOCKUP BUNDLE 2A) — RECORD OF EXPERIMENTAL DATA

M. H. Fontana
R. E. MacPherson
P. A. Gnadt
L. F. Parsly
J. L. Wantland

[redacted]

OAK RIDGE NATIONAL LABORATORY
CENTRAL RESEARCH LIBRARY
DOCUMENT COLLECTION
LIBRARY LOAN COPY
DO NOT TRANSFER TO ANOTHER PERSON
If you wish someone else to see this document, send in name with document and the library will arrange a loan.
UCN-7969
(3 3-67)

OAK RIDGE NATIONAL LABORATORY
OPERATED BY UNION CARBIDE CORPORATION • FOR THE U.S. ATOMIC ENERGY COMMISSION

Printed in the United States of America. Available from
the U.S. Atomic Energy Commission, Technical Information Center
P.O. Box 62, Oak Ridge, Tennessee 37830
Price: Printed Copy $10.60 ; Microfiche $0.95

This report was prepared as an account of work sponsored by the United States Government. Neither the United States nor the United States Atomic Energy Commission, nor any of their employees, nor any of their contractors, subcontractors, or their employees, makes any warranty, express or implied, or assumes any legal liability or responsibility for the accuracy, completeness or usefulness of any information, apparatus, product or process disclosed, or represents that its use would not infringe privately owned rights.

OAK RIDGE NATIONAL LABORATORY LIBRARIES

3 4456 0550108 9

ORNL-TM-4113
UC-79, UC-79e, UC-79p

Contract No. W-7405-eng-26

Reactor Division

TEMPERATURE DISTRIBUTION IN A 19-ROD SIMULATED LMFBR FUEL ASSEMBLY IN A HEXAGONAL DUCT (FUEL FAILURE MOCKUP BUNDLE 2A) – RECORD OF EXPERIMENTAL DATA

M. H. Fontana
P. A. Gnadt
R. E. MacPherson
L. F. Parsly
J. L. Wantland

SEPTEMBER 1973

NOTICE: This document contains information of a preliminary nature and was prepared primarily for internal use at the Oak Ridge National Laboratory. It is subject to revision or correction and therefore does not represent a final report.

OAK RIDGE NATIONAL LABORATORY
Oak Ridge, Tennessee 37830
operated by
UNION CARBIDE CORPORATION
for the
U.S. ATOMIC ENERGY COMMISSION

CONTENTS

	Page
ABSTRACT	1
INTRODUCTION	1
DESIGN	2
Heaters	4
Test Section and Rod Bundles	7
Main Control Power	10
Instrumentation	17
OPERATION	17
General	17
Data Handling	18
Data Presentation Format	19
EXPERIMENTAL PROGRAM AND DATA	22
COMMENTS	25
REFERENCES	26
APPENDIX A. EXPERIMENTAL PROGRAM, BUNDLE 2A	27
APPENDIX B. EXPERIMENTAL DATA	39
Test 2. Effect of Power and Flow; All Rods Heated	40
Test 3. Temperature Distribution; Linear Power Skew, 5 kW/ft	92
Test 4. Temperature Distribution Laminar Flow Conditions	116
Test 6. Central 7 Rods Only Heated	164
Test 9. Investigation of Wire Wrap Sweeping on Hexagonal Duct Temperatures. Three Rods Facing One Duct Wall Heated	176
Test 10. One Rod at a Time Heated; 10 kW/ft; 54 gpm	200
Test 11. 3:1 Power Skew Laminar Flow Conditions	280
Test 12. Effect of Guard Heat	316
Test 13. One Rod at a Time Heated; 8 kW/ft; 11 gpm	328
Test 14. 3:1 Power Skew 54 gpm 5 kW/ft	404

TEMPERATURE DISTRIBUTION IN A 19-ROD SIMULATED LMFBR FUEL ASSEMBLY IN A HEXAGONAL DUCT (FUEL FAILURE MOCKUP BUNDLE 2A) – RECORD OF EXPERIMENTAL DATA

M. H. Fontana P. A. Gnadt
R. E. MacPherson L. F. Parsly
J. L. Wantland

ABSTRACT

This report is a record of experimental data obtained from Fuel Failure Mockup bundle 2A, which simulated the configuration and power level of the Fast Test Reactor fuel. Bundle 2A consisted of 19 electric cartridge heaters with outside diameters of 0.230 in. spaced by 0.056-in. wire wraps on a 12-in. pitch all enclosed in a hexagonal can.

The purpose of this test series was to obtain thermal-hydraulic data for use in design of the Fast Test Reactor core. The report includes a description of the system and of the experimental procedures, a discussion of the data reduction procedures, and tabulated data from the 93 experiments performed in this series.

Keywords: sodium, LMFBR, fuel pins, thermal experiment, hydraulic experiment, electrical heaters, data collection.

INTRODUCTION

This report describes the Fuel Failure Mockup (FFM),[1] a sodium test facility built specifically for testing simulated LMFBR core segments at Fast Test Reactor (FTR) design power and coolant flow conditions, and documents the data obtained from the test series conducted on one test bundle. Analysis of the data, comparison with theoretical predictions, and extrapolation to full-size conditions are continuing and will be reported in future reports.

The FFM is a large, high-temperature sodium facility in which 19-pin bundles simulating LMFBR core segments have been subjected to thermal-hydraulic testing at FTR conditions. The core segments are simulated by electric cartridge heaters duplicating reactor fuel pin configuration and

heat flux. Spirally wrapped wire-like spacers containing both grounded and ungrounded thermocouple junctions space the heaters in the assemblies. These spacers have the same outside diameter and are installed at the same pitch (12 in.) as the spacers used in the FTR.

Sodium has been circulated in the FFM at temperatures as high as 1200°F, and power levels in 19-rod test bundles have been as high as 10 kW/ft in the simulated fuel elements. In bundle 2A, the highest total power with all rods operating has been 368 kW. The facility has logged 4310 hr of sodium circulation and approximately 500 hr with some power on the system. Flows as high as 227 gpm have been circulated through the test bundle, and tests have been run in which the flow through the test section has been adjusted to less than 1 gpm.

A number of heater bundles are scheduled to be tested in the FFM. Bundles may differ in number and power rating of the heaters, placement of instruments, configuration of the "can" which surrounds the bundle, and in mode of installation (i.e., from the top or bottom of the test section). Bundle 2A consisted of 19 pins 0.230 in. in diameter on 0.286-in. triangular centers, contained in a hexagonal can, and was installed from the bottom of the test section. It consisted of a 6-in.-long unheated entrance section, a 21-in. heated section, and a 3-in. unheated exit section. The purpose of the bundle 2A experiments was to provide data that could be used to design the fuel elements for the Fast Flux Test Reactor (FTR) and to evaluate analytical models that have been proposed to describe thermal-hydraulic behavior in the bundles.

DESIGN

Figure 1 is a simplified flow diagram of the system. A variable-speed pump and throttle valves are used to vary sodium flow through the test section, and a 440-kVA transfer bank provides electrical power to the simulated fuel pins. Power to the individual heaters may be varied from essentially 0 to 24.5 kW per element. A heat exchanger rated at 420 kW with an average sodium temperature of 1000°F removes the heat that enters the system through the heaters in the test section. The rod bundles can be installed through either the top or the bottom of the test

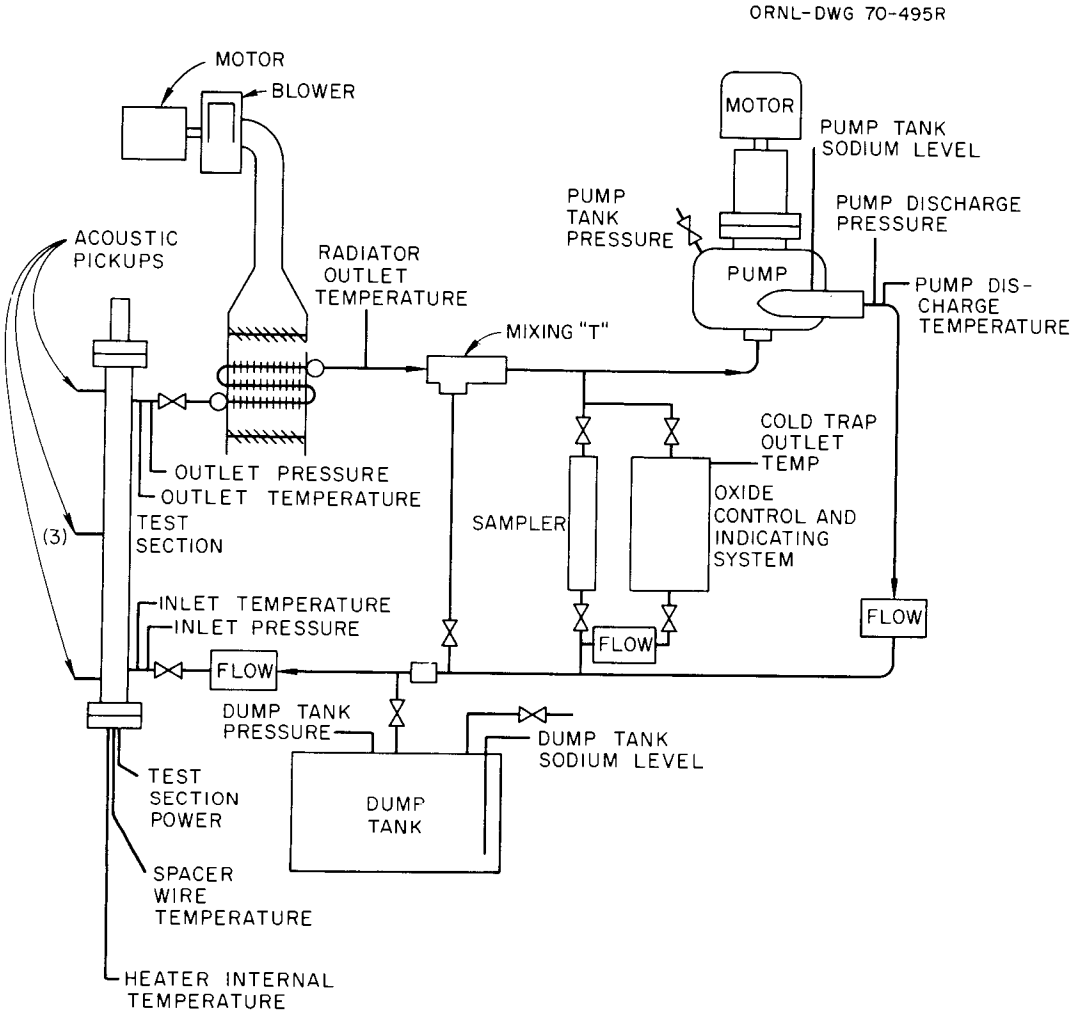

Fig. 1. LMFBR-FFM facility instrumentation.

section housing. A bypass line accommodates any excess flow of the pump. The mixing tee is designed to reduce the potential for thermal fatigue failure if the main and bypass streams are at substantially different temperatures. An oxide control and indicating system containing a cold trap and plugging indicator is installed to reduce the oxide concentration in the sodium to less than 5 ppm. A tank is provided for sodium storage when the system is not in operation. Pressure transmitters, flowmeters, and thermocouples are installed to measure the system operating parameters, and Calrod-type heaters are installed on all the system lines to preheat the system above the freezing point of the sodium. Design details of the individual components are available in Ref. 1; Table 1 gives the present and ultimate capabilities of the FFM system. The piping system is designed according to the ANSI Code for Pressure Piping B31.1.0 — 1967 and is fabricated primarily from type 304H stainless steel purchased and upgraded to applicable RDT standards.[2] The facility will be adapted in FY 1974 for operation with 37 full-length, full-power rods.

Heaters

The heaters used to simulate the individual fuel pins were manufactured by the Watlow Electric Manufacturing Company, St. Louis, Missouri, in accordance with specifications given in Ref. 3. Figure 2 shows the important characteristics of the heaters used in bundle 2A. Power, up to 176 V and up to 140 A, enters through the copper lead with relatively low heat generation. Heat is generated over a desired length in the Nichrome-V winding. The core inside the winding and the insulation between the winding and the type 316 stainless steel heater sheath are of compacted boron nitride (BN). Temperatures on the inside of the heater sheath are measured by alternate Chromel-Alumel bare wires 0.010 in. in diameter installed in the 0.039-in. clearance between the heater and the sheath. These wires are joined to the sheath to form intrinsic thermocouple junctions and are insulated by the compacted BN. Prototypes of these heaters were tested at powers up to 12.5 kW/ft and 1200°F. The bundle operated for over 470 hr without failure over a six-month interval in the FFM. These heaters are described in Refs. 4 and 5.

Table 1. Capabilities of the FFM

	Present design	Maximum capability		
		With present test section	With 37-rod conversion	Maximum potential[a]
Power input, kW	442	467	1400	10,000
Test section temperature, °F	1300	1300	1300	1,300
Test section flow, gpm	54	100	300	650
Radiator capacity, kW	418	420	1500	10,000
Bundle size, heaters[a]	19	37[b]	97[c]	217
Pump pressure rise, psi	80 (at 2600 rpm)	130 (at 3500 rpm)	100 (at 3500 rpm)	100 (at 3500 rpm)
Sodium purity, ppm O_2	<10	<10	<10	<10

[a]The exiting pump can accommodate full size 217-rod subassemblies. Major revisions would be required to meet these conditions.

[b]The test section can accommodate 37 rods, but power controls and heat dump limit operation to 19 full-power rods.

[c]The test section can accommodate 91 rods, but power available can supply 37 rods with 3 ft heated length at full power of 12.5 kW/ft.

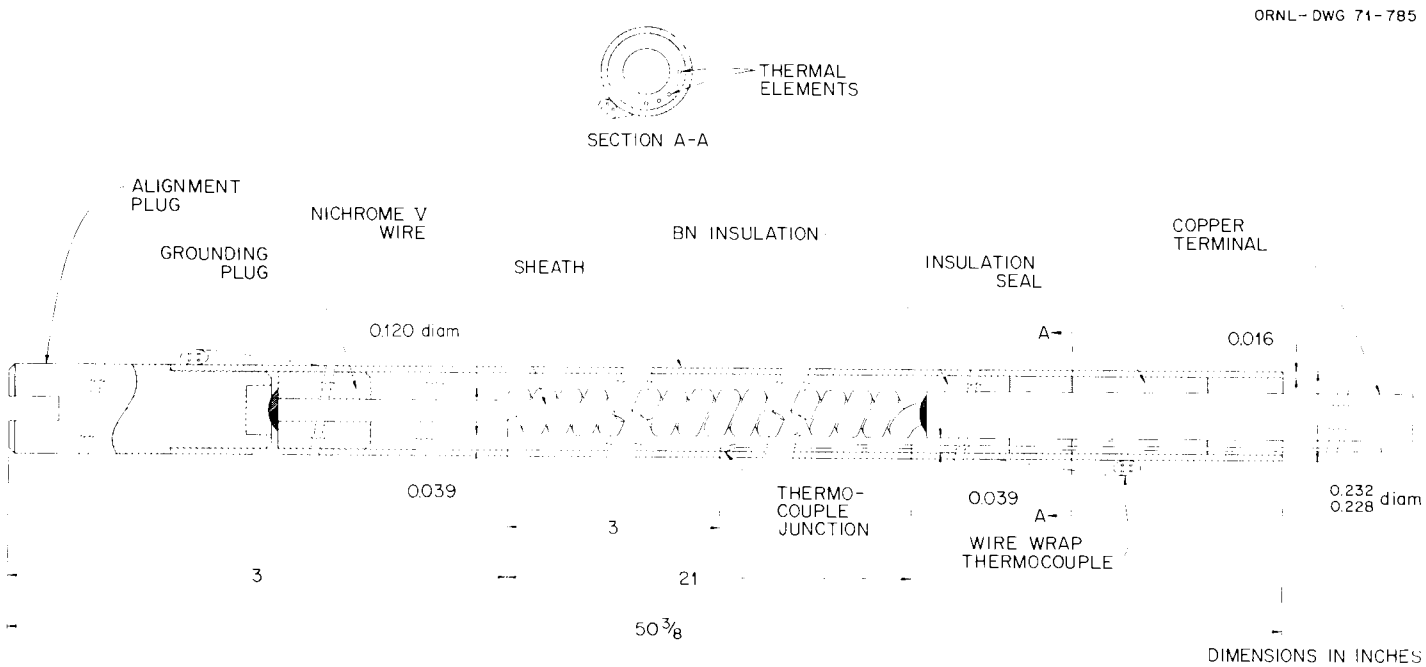

Fig. 2. Cross section of heater for bundle 2A, FFM.

Test Section and Rod Bundle

The test bundles are composed of 19 heaters assembled into a triangular pitch. A 0.056-in.-diam spacer wire wrapped on a 12-in. pitch is attached to each of the 19 heaters (see Fig. 2). The heaters are spaced so that the wire wraps on a given heater touch the adjacent heaters. The wire wraps for each of the heaters contain two thermocouples, which may be placed along the axial length of the heater to obtain temperature readings wherever desired. The wire wraps are supplied with either ungrounded- or grounded-junction couples. When grounded-junction couples are provided, pairs of individual Chromel and Alumel thermal elements are attached to the inside diameter of the 0.008-in. wall of the wire wrap. These grounded thermal elements provide two thermocouples that can measure the temperature on opposite sides of the wire wrap. By proper placement they can read temperatures in adjacent channels or at the wrap-heater interface and at the outside of the wire wrap.

Bundle 2A was designed to investigate local internal flow and heat transfer as affected by rod assembly spacers and to investigate the temperature profiles at and near the perimeter of a simulated FTR fuel pin bundle and wrapper. Figures 3 and 4 show the configuration of bundle 2A and the temperature instrumentation installed.

In these figures, the numbers in the large circles identify the heaters, and the numbers in the small circles indicate the axial position, in inches from the start of the heated zone at which thermocouple junctions exist. The position of the small circles relative to the large ones to which they are tangent indicates the azimuthal position of the wire-wrap spacer at the axial plane of the four internal thermocouple junctions. It may be seen in Fig. 3 that the junctions in the ungrounded-type spacers are at 2- and 12-in. spacings. The spacers containing grounded junctions have both junctions at the same axial plane, arranged to measure temperatures on opposite sides of the spacers. Figure 4 shows how these spacers were arranged azimuthally.

The crossed circles in Fig. 3 indicate the channels that had exit temperatures measured by thermocouples in the exit rake; Figs. 3 and 4 also show the positions of thermocouples in the duct wall.

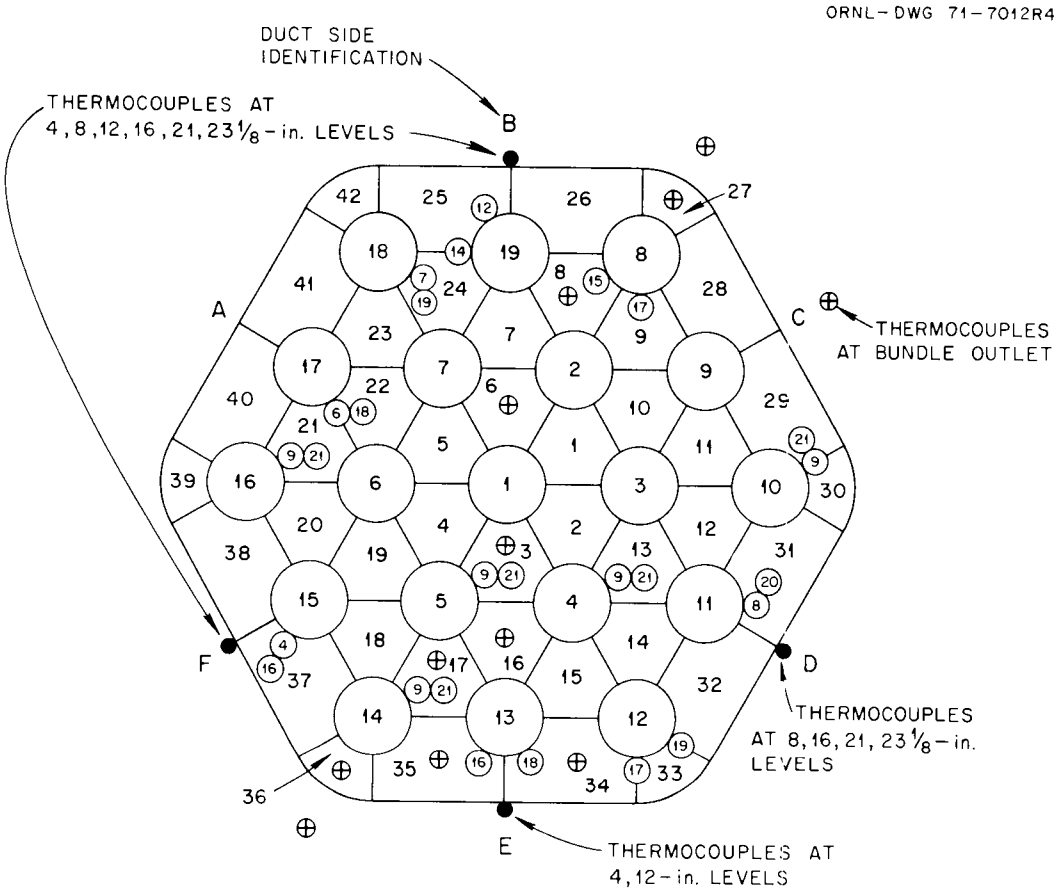

LOCATIONS OF UNGROUNDED WIRE-WRAP THERMOCOUPLES. THE SMALL CIRCLES INDICATE THE LOCATION OF THE WRAP FOR EACH JUNCTION AND THE NUMBERS IN THE ROD OPPOSITE THEM INDICATE THE AXIAL POSITIONS.

Fig. 3. LMFBR-FFM — locations of grounded-junction thermocouples in wire wraps and heater internal thermocouples.

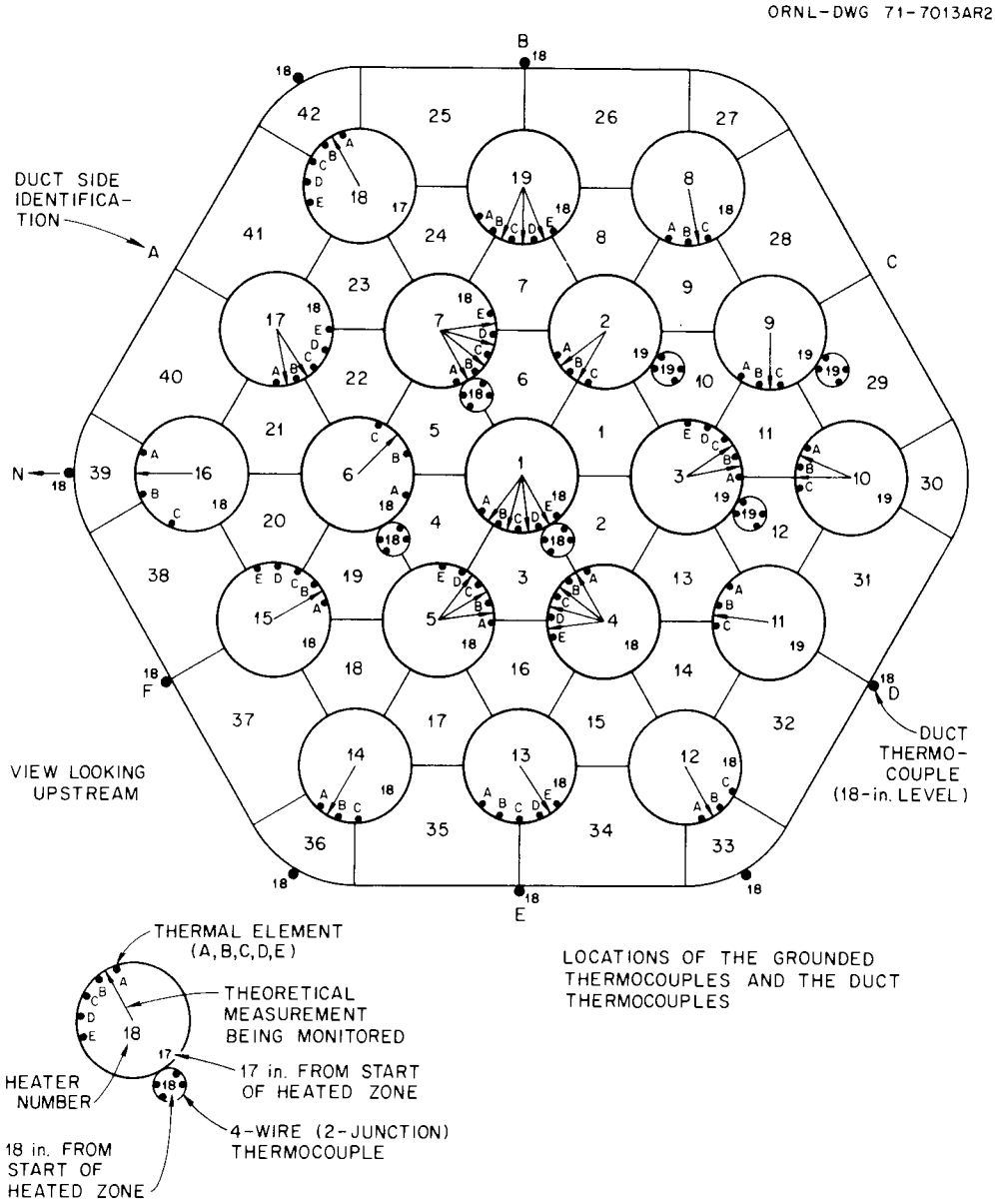

Fig. 4. LMFBR-FFM — locations of grounded-junction thermocouples in wire wraps and heater internal thermocouples.

The test bundle was designed to be installed with the terminal end at the bottom of the test section with sodium flowing upward. This placed the internal heater thermocouples at a plane 18 in. from the start of the heated zone, which corresponds to the FTR midplane. Above this plane are 3 in. of heated length and 3 in. of additional unheated length. Figure 5 is a cross section of the test section in the configuration used for the experiments reported. A thermocouple rake, shown in Fig. 6, was installed at the outlet end of the bundle to measure the sodium temperatures at the exit of the various flow channels in the bundle.

Figures 7 and 8 are photographs of bundle 2A during assembly. Figure 9 shows the end of the bundle and the thermocouple rake, and Fig. 10 shows the lead end of the bundle after it was installed in the facility and the instrumentation connected to the facility wiring.

Main Control Power

The power to the test section electric heaters is regulated by six controllers which activate zero-voltage-firing silicon-controlled rectifiers (SCRs) in series with the heaters. Normally each of five controllers feed three heaters and one controller feeds four heaters. The six separate control circuits can also be connected so that all heaters may be operated from a common controller. The power to each set of heaters can be controlled from 0 to approximately 24.5 kW per heater. Experiments with single heaters operating can be performed by disconnecting two heaters from the relevant circuit.

The supply transformer tap settings are adjusted so as to maximize the conducting time of the basically on-off SCR power control circuit and thus to minimize heater rod surface temperature fluctuations. The bundle is protected against massive failure of the heaters by a fast-acting electronic circuit that diverts current from the failing heater.[6]

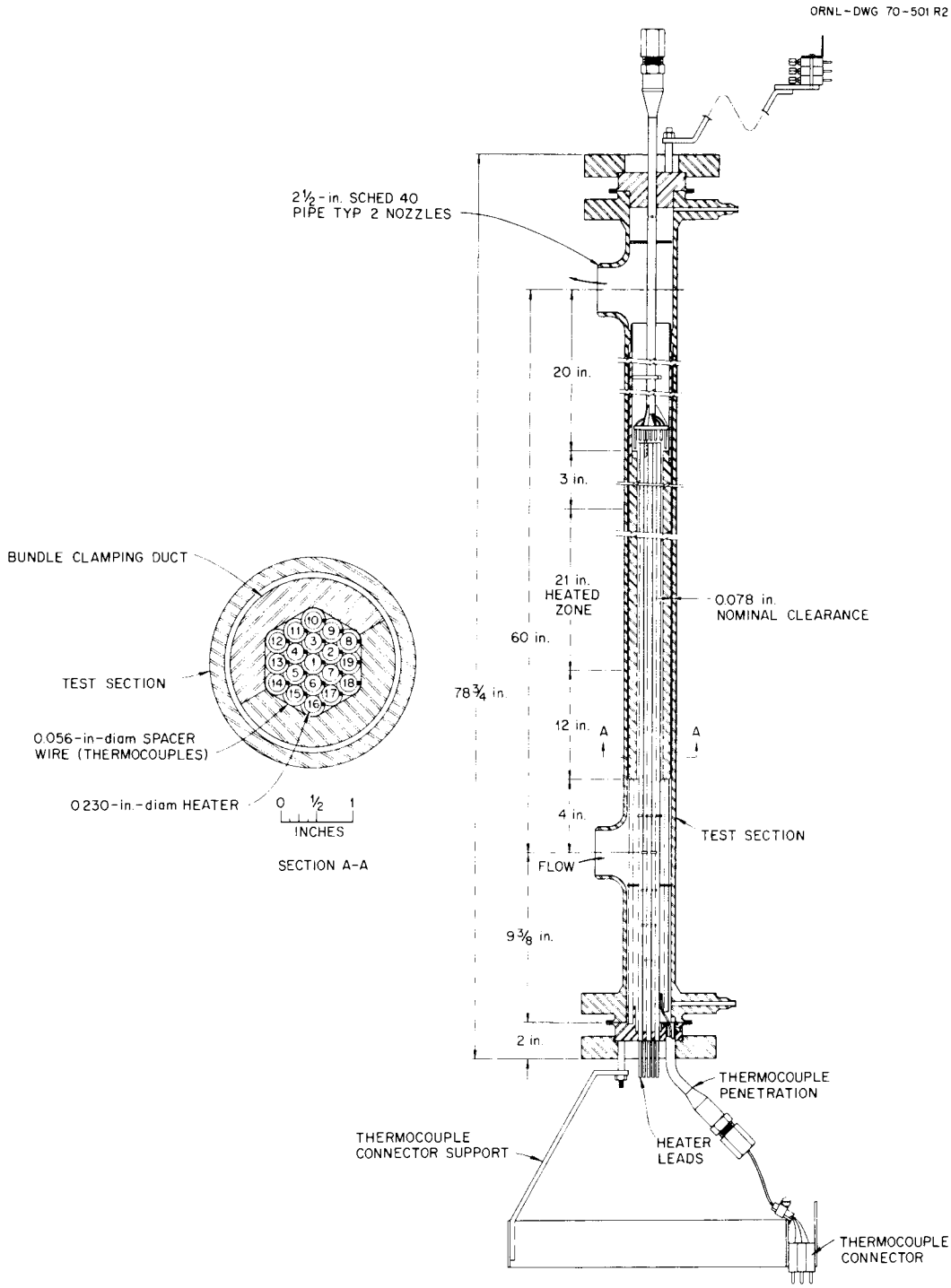

Fig. 5. LMFBR-FFM — test section assembly for bundle 2A.

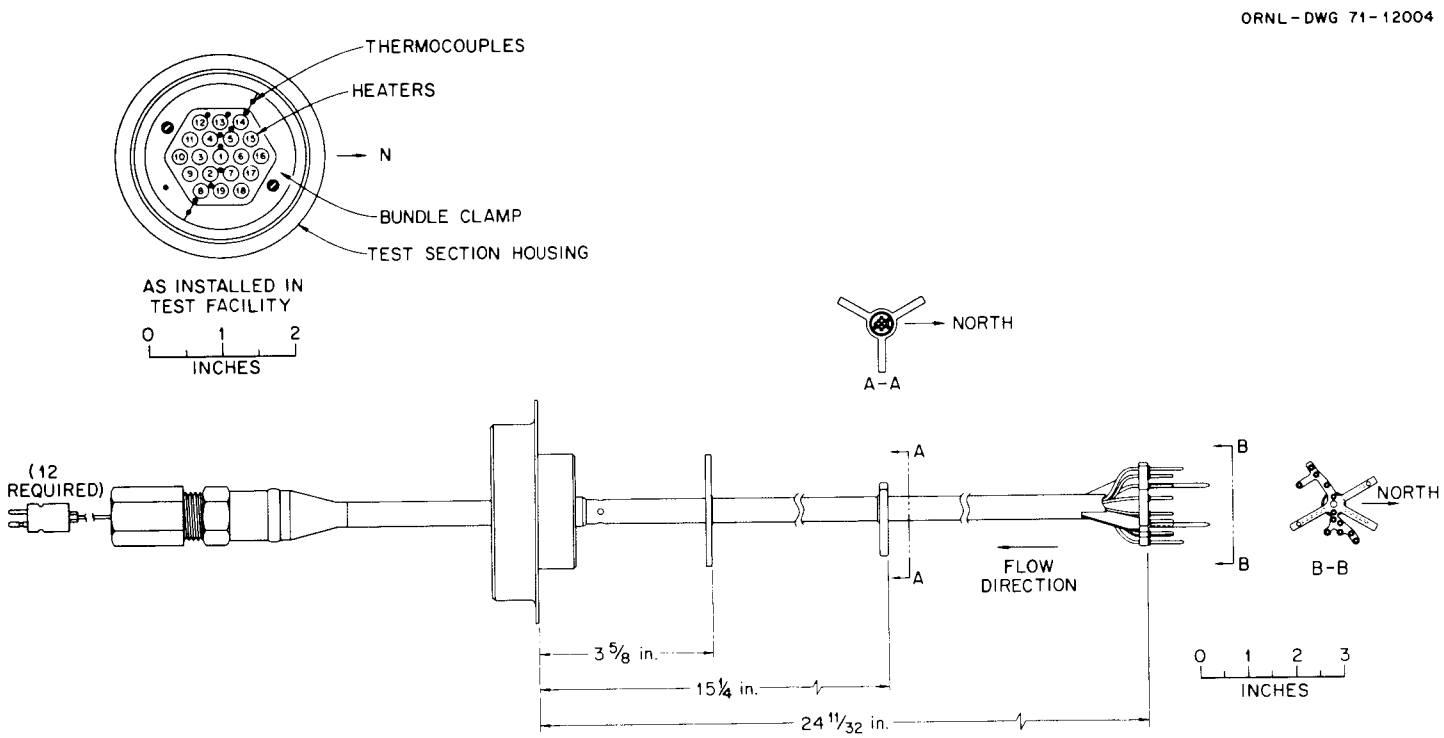

Fig. 6. Thermocouple rake assembly.

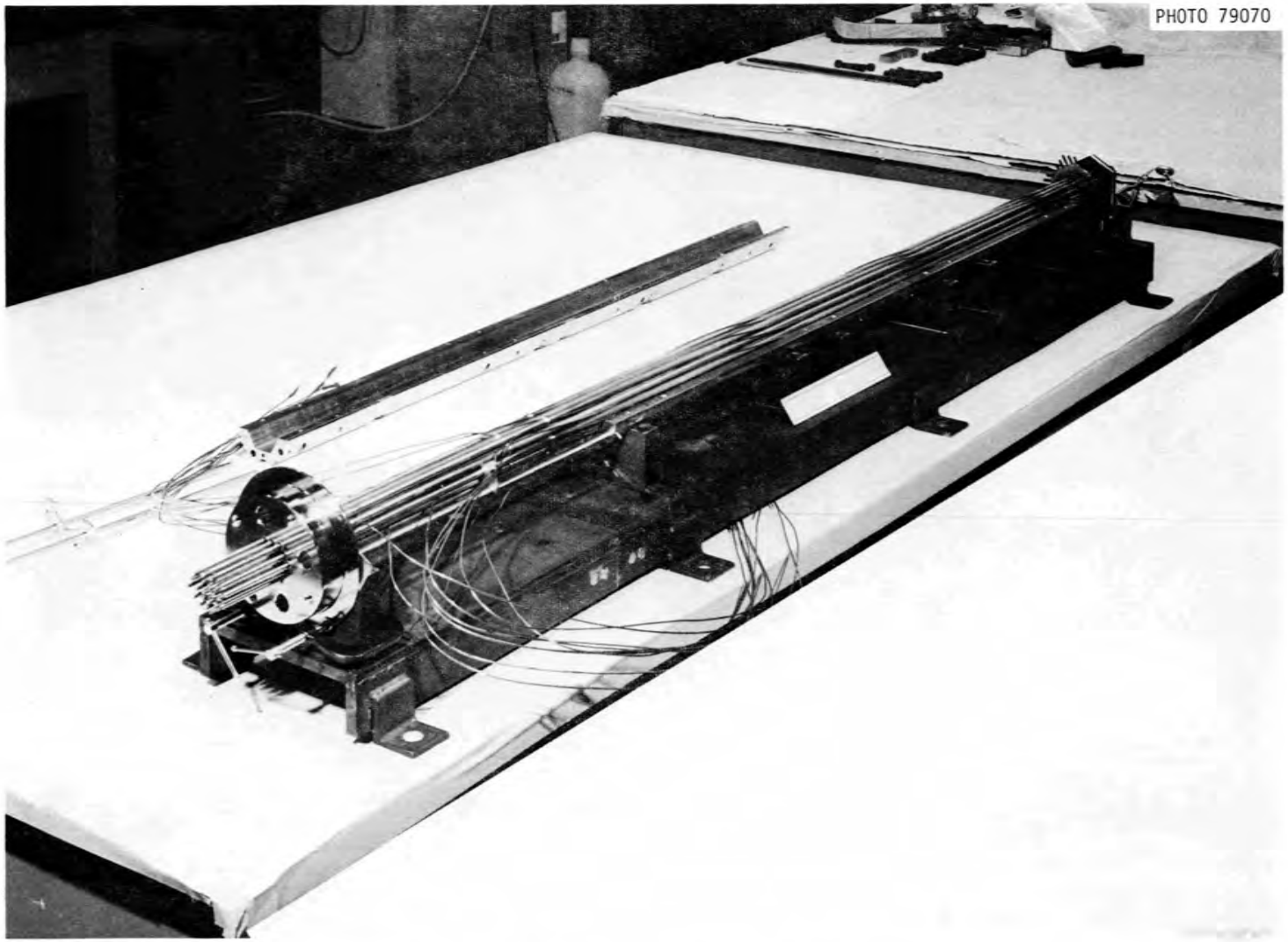

Fig. 7. Bundle 2A in assembly jig.

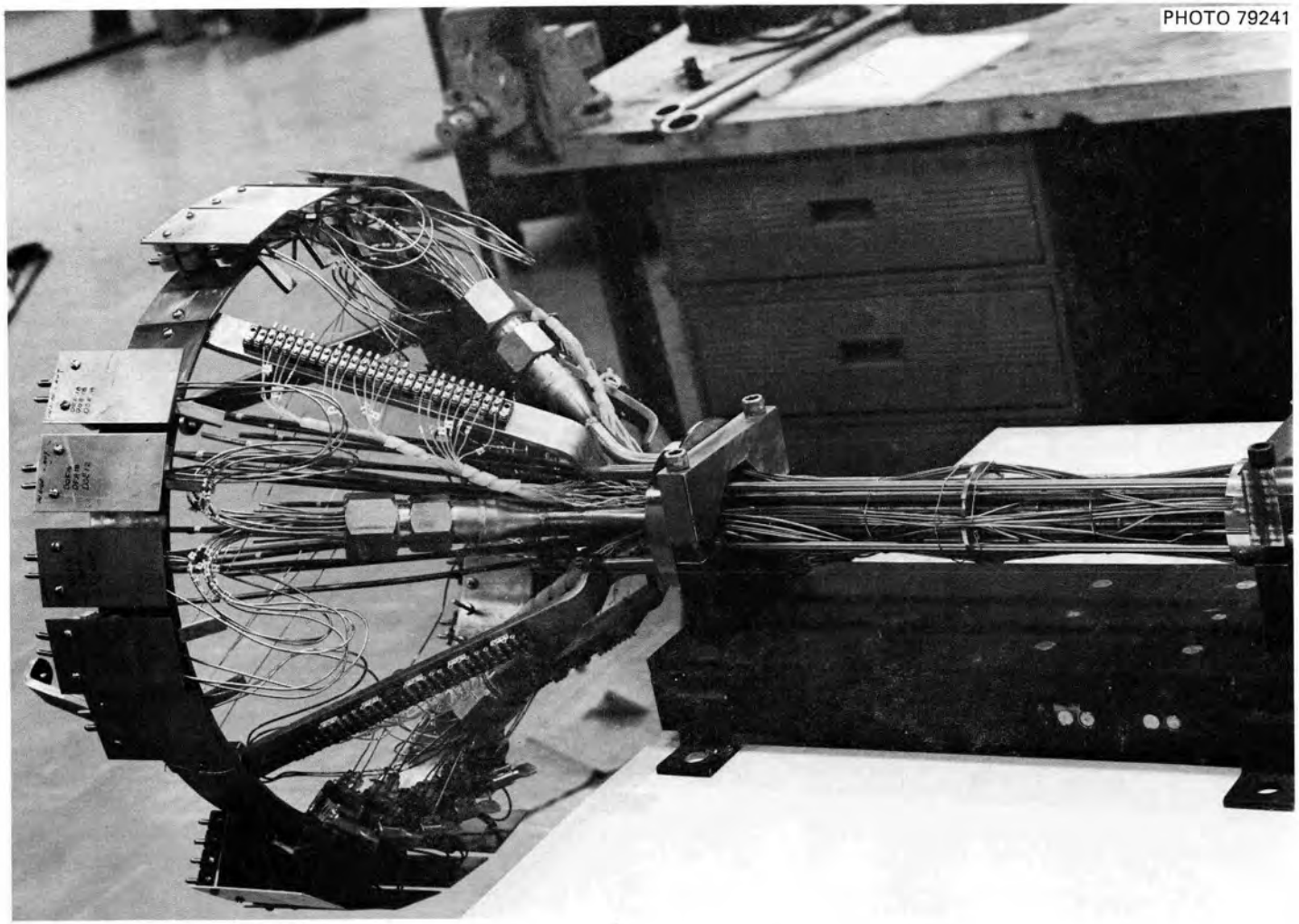

Fig. 8. Bundle 2A lead-in section.

Fig. 9. View of end of heaters and bundle lead-in section.

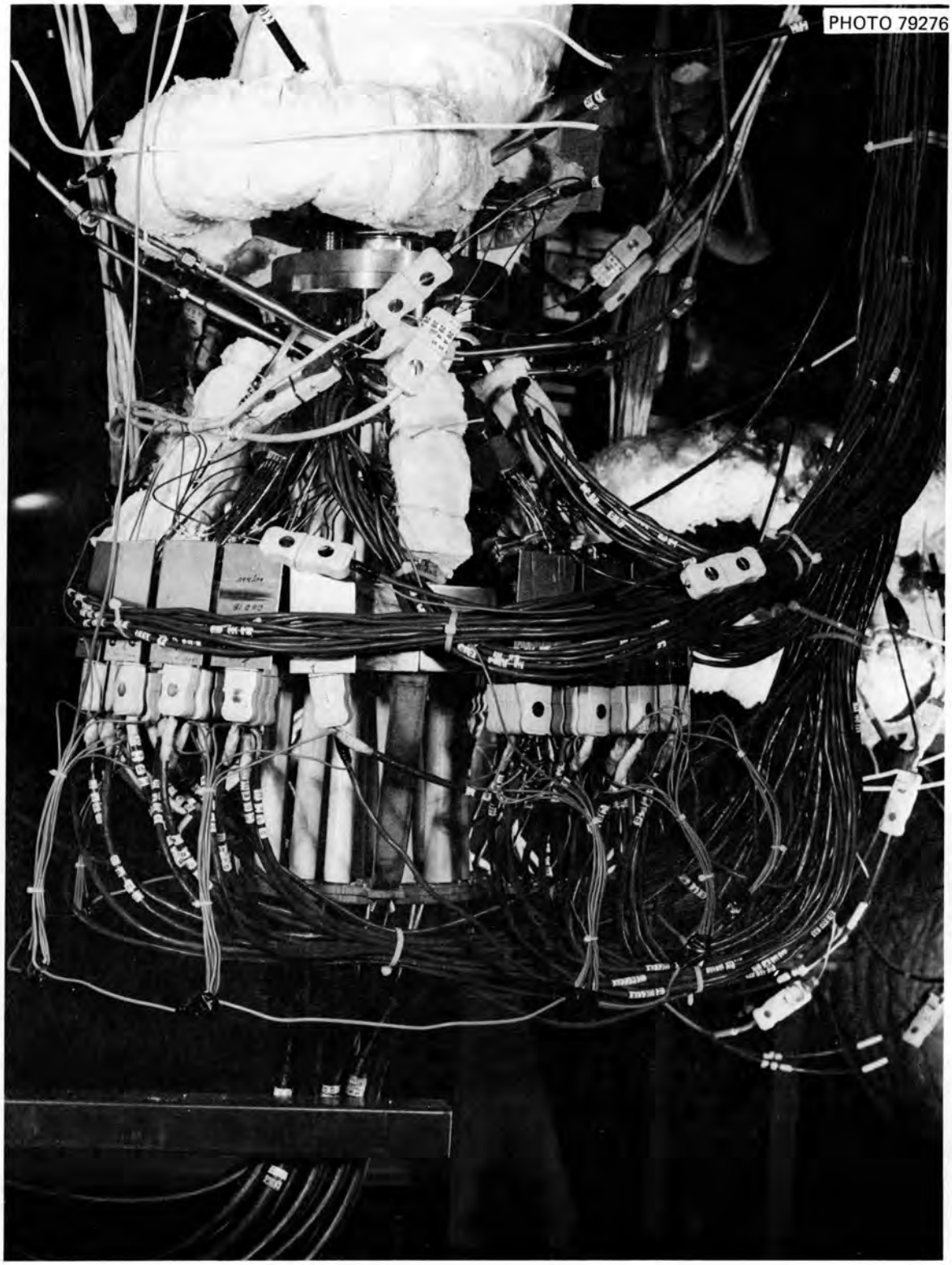

Fig. 10. Bundle 2A installed in facility.

Instrumentation

Data Acquisition System

Data are taken primarily with a Beckman Dextir data acquisition system interfaced to a Digital Equipment Corporation PDP-8 computer. Upon request, this system scans the level of preselected system measurement signals, records them on magnetic tapes to be used with data treatment programs on the IBM 360 computer, converts them to engineering units, and lists them by teletypewriter at the test facility. The scanning rate of the system is eight channels per second; overall accuracy is ±0.07% of full-range scale, and resolution is one part in 10,000.

Instruments

Power to the test section is measured in the six individually controlled circuits (and a separate total circuit) by thermal converters which are accurate to within 1%. Sodium flow is measured by two electromagnetic flowmeters[7] with accuracy of better than 1%. Flow measurements throughout the full range of operation agree within 5% with values calculated by heat balances. Pressure measurements are made with diaphragm-type NaK sealed transmitters[8] which are welded into the piping systems at points where pressure measurements are desired. The transmitters are calibrated in situ, and readouts indicate an accuracy of 1%. Thermocouples for measuring the temperature of the sodium are fabricated from premium-grade Chromel-Alumel thermocouple material and are within ±0.5% accuracy. Calibration at isothermal conditions and subsequent corrections bring the temperature measurement accuracy to within 1%.

OPERATION

General

On September 1, 1972, the facility had logged 4310 total hours, approximately 500 of which were with the heaters operating at some power.

The test program was all performed during day shift operation under the direction of either the facility technician or the project engineer.

During off-shift hours the system was allowed to operate isothermally at approximately 600°F and 20 gpm sodium flow. During abnormal conditions an unattended operation monitoring system drains the sodium into the sump and reduces the preheat input to the piping and components to zero. All facility operational activities were performed in accordance with procedures specified in the FFM Operating Manual.[9]

The general procedure for obtaining data for a specific set of conditions was as follows:

1. set sodium flow to predetermined value by pump speed and/or valve position adjustment,
2. set test-section sodium inlet temperature to predetermined value by adjusting preheat Variac settings,
3. take five sets of isothermal data to be averaged for thermocouple calibration and correction,
4. adjust power input to test-section heaters to value desired,
5. adjust radiator damper position and cooling air blower motor speed as required to maintain constant inlet sodium temperature,
6. after system has stabilized take five to ten sets of data.

Data Handling

Starting with bundle 2A, semiautomated data-processing procedures have been developed for the FFM. The data are recorded using the Dextir data logging system, which also services other experimental programs in the Reactor Division. Each set of readings contains about 140 items of information, and at least five sets of readings are used to define a data point. Sets of readings are normally taken 2 min apart; data are identified on the Dextir master tape by date and time.

In the Dextir and associated equipment, analog data are digitized, stored on a disk by a PDP-8 computer, and transferred to a master tape which is then sent to the ORNL Computing Center for further processing. The data from the FFM are retrieved and delivered to the data processing group on punched cards. The data processing group inserts the following:

1. number of sets to define data point,
2. isothermal or test data,

3. run number and parameters for ØRRIBLE,
4. failed thermocouples,
5. heaters operating,
6. channels blocked.

The cards are then read back into the computer with a data processing program. The isothermal runs are used to determine the difference between the individual thermocouples in the first section and one thermocouple arbitrarily chosen as a reference. Also, all readings are first corrected to a constant cold junction temperature of 150°F. (There are three cold junction boxes in use, which are maintained at 150 ± 2°F.)

The test data are corrected and averaged, and the data are output as tables and as punched card images which are stored on a disk pack on the PDP-10 computer. From the card images, cards are made (for backup), tabulated data are printed, a calculation is made using the ØRRIBLE* code[10] for the relevant experimental conditions, and graphs comparing the calculated and observed temperatures are made.

Data Presentation Format

The data are tabulated in Appendix B. There are four pages of printed data for each experiment. The first page contains operating data and a heat balance; the other three pages contain tabulated temperature data for ungrounded-junction wire-wrap thermocouples, grounded-junction wire-wrap thermocouples, duct-wall thermocouples, thermocouples in channel exits, and thermocouples inside heaters.

The temperature tables contain five columns of information, as follows:

---

*ØRRIBLE is the generic name of a series of computer codes for calculating the flow and temperature distribution in rod bundles which use wire-wrap spacers. Details of the program are given in the reference. Several versions of ØRRIBLE have been written. These include: 19 pins, hexagonal duct, no area variation; 19 pins, scalloped duct, no area variation; 19 pins, scalloped duct, variable areas (included both effect of wire wraps and of bundle spiraling); 37 pins, hexagonal duct; and, 217 pins, hexagonal duct.

1. DESCRIPTION — This is a brief (20-character) description which specifies where the temperature is being measured. Examples of the code for each of the tables follow:

TC 15 04 U CH37

- CH37: The thermocouple is in channel 37.
- U: Ungrounded junction.
- 04: 4 in. downstream of the start of the heated section.
- 15: On rod 15.

TC 01 18 C CH3

- CH3: The thermocouple is in channel 3.
- C: Letters A, B, C, and D characterize grounded-junction thermocouples. The given wire wrap contains either an AB pair or a CD pair. In an AB pair, the wire wrap is at the center of a channel. Junction A is against the rod, and B is diametrically opposite. In a CD pair, the wire wrap is in a gap. C faces the left-hand channel and D the right-hand channel.
- 18: 18 in. downstream of the start of the heated section.
- 01: On rod 1.

TC D 0B 04

- 04: 4 in. downstream of the start of the heated section.
- 0B: Centered in face B. The duct-wall thermocouples are either at the center of the face or at a corner. The latter have a two-letter code (e.g., AB at the corner formed by faces A and B).
- D: A duct-wall thermocouple.

TC EC 03

At the end of channel 3.

Channel exit. EA designates a thermocouple in the annulus outside the bundle. In this case, the channel number is that nearest the thermocouple.

TC R 01 18 AB

The heaters have either three (A, B, C) or five (A, B, C, D, E) wires, alternately Chromel and Alumel, spot welded to the inside of the cladding. Wires A and B form this thermocouple; its hot junction presumably is midway between the attachment points of A and B.

18 in. downstream of the heated section inlet.

In heater No. 1.

Heater internal thermocouple.

2. TEMP. DEG F — The temperature measured by the thermocouple. This is determined by calculating a least-squares line through several observations (usually five) taken at 2-min intervals and taking the value at time zero. Corrections are made for cold junction temperature and for deviation from the reference thermocouple in an isothermal calibration run made on the same day.

3. STD DEV — The standard deviation of the set of observations used to compute the mean. This is calculated by

$$\sigma = \sqrt{\frac{\Sigma(t - t_{mean})^2}{n - 1}}$$

where n is the number of values used to find the mean.

4. T — T INLET — The difference between the temperature and the inlet temperature. (The inlet temperature is taken as that measured by thermocouple TC 313.)

5. NORM T — The normalized temperature. This is the ratio of T — T INLET (measured by TC 313) to the mixed-mean temperature rise through the bundle obtained from the flow and power data.

EXPERIMENTAL PROGRAM AND DATA

Ten tests were performed using bundle 2A. The planned test conditions and the date, time, and ØRRIBLE case number corresponding to the experiment are given in a series of tables in Appendix A. The reduced experimental data are presented in Appendix B, except for data from the first experiments, which are given here.

Test 1 consisted of isothermal pressure drop measurements at 600°F and flows from 10 to 90 gpm. The results are given in Table 2 and Fig. 11. The experimental program is given in Table A.1.

Test 2 (Table A.2) comprised experiments performed with all rods heated uniformly. In this test, the effects of flow at constant power and of power at constant flow were explored. Run 2-109 was repeated seven different times, on four different dates, to search for possible bundle aging effects. A slight change was observed from the first to the second time the bundle was used but nothing after that. Three of the 2-109 runs explored the effect of guard heating. The test section has a set of guard heaters which are normally adjusted to give essentially adiabatic operation of the test section. One run was made with the heaters adjusted normally, a second with the heaters set so that the temperature at the heaters was 100°F higher than that of the test-section wall, and the third with the guard heaters turned off, which produced a temperature 60°F lower than that at the test-section wall. These tests showed that guard heat has an insignificant effect.

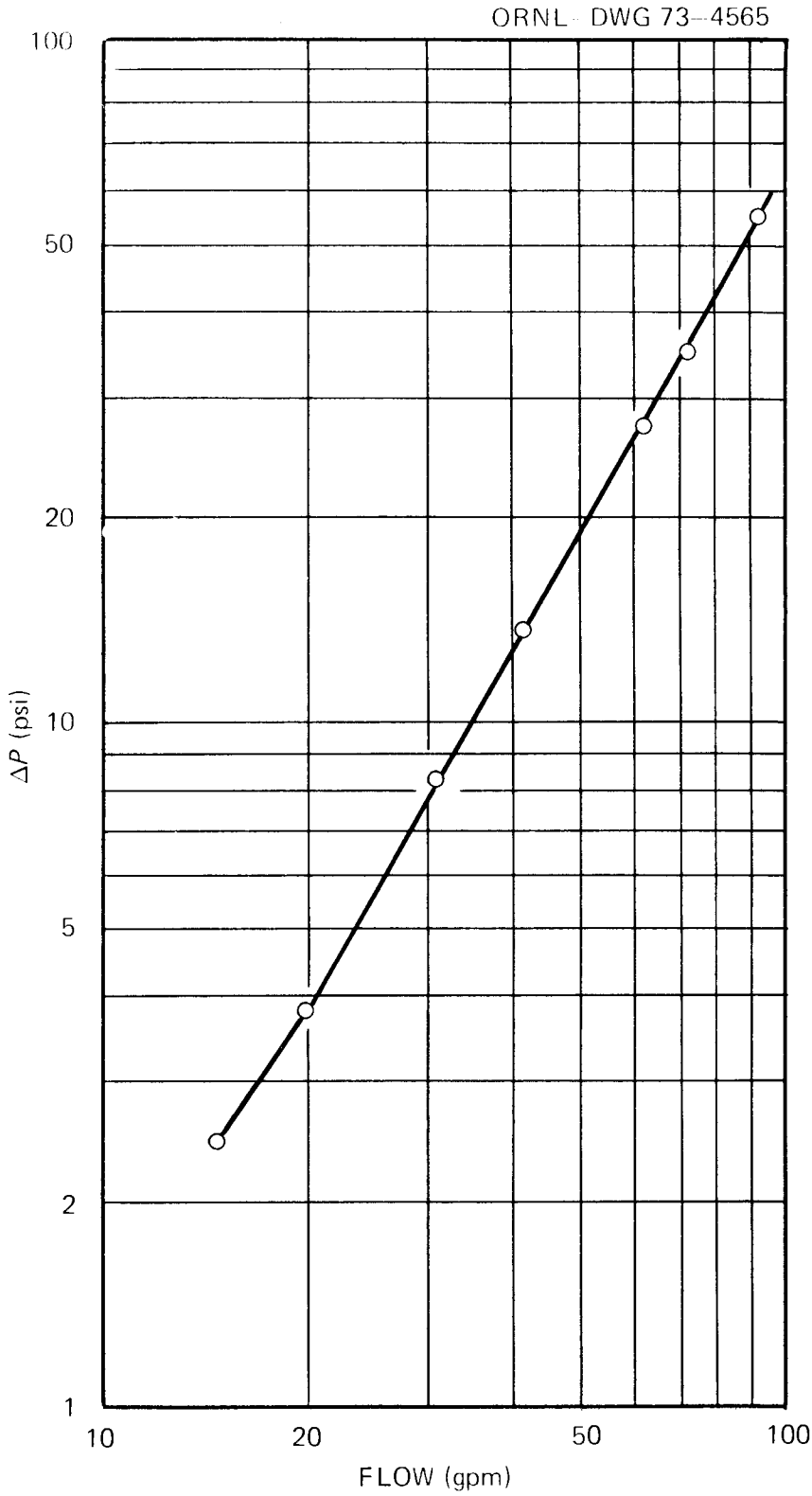

Fig. 11. Pressure drop vs flow, FFM bundle 2A.

Table 2. Results of series 2, test 1, isothermal pressure drop at 600°F

Run	Flow (gpm)	Δp (psi)
1a	14.7	2.43
1b	19.4	3.73
1c	30.9	8.11
1d	41.2	13.68
1e	50.7	20.16
1f	60.6	27.34
1g	69.9	35.44
1h	79.5	44.48
1i	88.4	54.68

Test 3 (Table A.3) consisted of six runs made at a nominal power of 5 kW/ft and with a 10% (peak-to-average) power skew, which represents the maximum power gradient across five rows of rods in the FTR. It was found that temperature asymmetries occurred at uniform power due to the effects of the wire-wrap spacers. Therefore, experiments were run with the power skewed in two directions: one to amplify and the other to oppose the pre-existing effect of the spacers.

Test 4 (Table A.4) explored temperatures at low flows and powers simulating conditions in the FTR at the decay heat removal mode.

Test 6 (Table A.5) was performed with power applied to only the seven central heaters. The intention was to investigate mixing from the central region of the rod bundle to the peripheral region.

Test 9 (Table A.6) was planned to investigate the effect of wire-wrap flow sweeping on the flow in peripheral channels. Six runs were made with the three rods adjacent to one duct flat being heated in each run. The skewing of the temperatures in the peripheral channels could then be used to infer the tangential component of flow in the peripheral channels.

Test 10 (Table A.7) comprised 19 runs in which the 19 heaters were heated separately at 10 kW/ft, with a flow of 54 gpm. The transport of energy from the heated rod through the bundle would indicate the mixing characteristics within the rod bundle.

Test 13 (Table A.8) was similar to test 10 except that a flow of 11 gpm and powers of 8 kW/ft were used. The lower flow magnified the effect of the isolated single-rod heat sources.

Test 11 (Table A.9) was a series of eight runs at low flow with a 3:1 (max-to-min) power skew, to investigate potential flow problems in the radial blanket of future LMFBRs. This was done at the request of Westinghouse Advanced Reactors Division, which will do further experiments in the future with realistic blanket rod configurations.

Test 14 (Table A.10) consisted of two runs made at 5 kW/ft (av) and 54 gpm (100% flow) with the 3:1 power skew.

COMMENTS

This report is intended only to make the data from the bundle 2A series available for study. Interpretations of the data will be published in separate reports.

Bundle 2 has proved to be unusually durable. No heaters were lost during the present series of experiments, but two of the thermocouples inside the heaters failed during operation of the bundle. No thermocouples of other types failed during operation.

REFERENCES

1. A. G. Grindell and R. E. MacPherson, Final Systems Design Description of the Fuel Failure Mockup of the LMFBR, ORNL-TM-3656 (September 1972).

2. Index of RDT Standards, Division of Reactor Development and Technology, U.S. Atomic Energy Commission (issued quarterly).

3. Job Specification, Reactor Division, Oak Ridge National Laboratory, Heaters for FFM Bundle No. 3, ORNL Specification JS-174-246 (Aug. 26, 1971). (Note bundle 2A heaters and bundle 3 heaters were bought to the same specification as defined in this reference.)

4. D. L. Clark, "Adapting Commercial Heaters to Simulate LMFBR Fuel Rods in Sodium," Trans. Amer. Nucl. Soc. 13(2), 817 (1970).

5. R. E. MacPherson and D. L. Clark, "High Performance Electric Heaters for LMFBR Fuel Pin Simulation," Trans. Amer. Nucl. Soc. 15(1), 366–67 (1972).

6. R. D. Stulting, Electronic Circuit for the Protection of Cartridge Heaters Simulating Fast Reactor Fuel, ORNL-TM-3693 (July 1972).

7. R. G. Affel, G. H. Burger, and C. L. Pearce, Calibration and Testing of 2 and 3-1/2 in. Magnetic Flowmeters for High Temperature NaK Service, ORNL-TM-2793, Oak Ridge National Laboratory (March 21, 1960).

8. W. R. Miller, High Temperature Pressure Transmitter Evaluation, ORNL-TM-2483 (July 25, 1958).

9. P. A. Gnadt and A. G. Grindell, LMFBR – FFM Operating Manual, Oak Ridge National Laboratory Internal Memorandum (March 2, 1971).

10. J. L. Wantland, ØRRIBLE – A Computer Program for Flow and Temperature Distribution in LMFBR Fuel Rod Bundles, ORNL-TM-3516 (October 1971).

Appendix A

EXPERIMENTAL PROGRAM, BUNDLE 2A

This Appendix presents tabulations of planned test conditions and the date, time, and ØRRIBLE case number for the experiments.

Table A.1. Test series 2, test 1

Purpose: To investigate the effect of system temperature on the pressure drop across a simulated segment of an FTR fuel subassembly

To perform an in situ calibration of all test-piece thermocouples

Control:

	Test section			
Run	Inlet temperature (°F)	Outlet temperature (°F)	Flow (gpm)	Power (kW/ft)
1a	600	600	15	0
1b	600	600	20	0
1c	600	600	30	0
1d	600	600	40	0
1e	600	600	50	0
1f	600	600	60	0
1g	600	600	70	0
1h	600	600	80	0
1i	600	600	90	0

Measure: Test section inlet pressure, psig
Test section outlet pressure, psig
Cladding internal temperatures, °F
Spacer wire temperatures, °F
Hexagonal can temperatures, °F

Table A.2. Test series 2, test 2

Purpose: To provide base-line data on the temperature profiles that exist in a simulated segment of an FTR core subassembly at typical operating conditions

To specifically investigate the temperature profiles at and near the perimeter of a simulated FTR fuel pin bundle and wrapper

Control:

Run	Test section: Inlet temperature (°F)	Test section: Flow (gpm)	Test section: Power (kW/ft)	Test section: Heater	Date	Time	ØRRIBLE case
101	600	54	2	All	12072	1151	602
102	600	54	4	All	12172	915	601
103	600	54	6	All	12172	1037	603
104	680[a]	54	8	All	21072	1140	617
105	830[a]	54	10	All	22472	1109	618
105	830[a]	54	10	All	22472	1143	619
109	600	54	5	All	12172	1015	605
110	600	43.2	5	All	12172	1338	604
111	600	32.4	5	All	12172	1447	611
109	600	54	5	All	30372	951	628
104	708[a]	54	8	All	42472	1200	690
109	600	54	5	All	42672	918	693
109	600	54	5	All	42672	939	694

Measure: Test section outlet temperature, °F
Test section inlet pressure, psig
Test section outlet pressure, psig
Cladding internal temperatures, °F
Spacer wire temperature, °F
Hexagonal can temperatures, °F

[a]Inlet temperature raised to this value to increase the Δt in the heat dump as required to reject the heat.

Table A.3. Test series 2, test 3

Purpose: To determine temperature profiles in a simulated segment of an FTR fuel subassembly near the wrapper with a linear power skew factor

Control:

Run	Test section: Inlet Temperature (°F)	Test section: Flow (gpm)	Test section: Power (kW/ft)	Test section: Heaters	Date	Time	ØRRIBLE case
101	600	54	5.5	8, 18, 19	12472	1128	607
			5.25	2, 7, 9, 17			
			5.0	1, 3, 6, 10, 16			
			4.75	4, 5, 11, 15			
			4.5	12, 13, 14			
102	600	43.2	4.5		12572	1058	608
103	600	32.0	4.5		12572	1402	610
201	600	54	4.5	8, 18, 19	12472	1319	630
			4.75	2, 7, 9, 17			
			5.0	1, 3, 6, 10, 16			
			5.25	4, 5, 11, 15			
			5.5	12, 13, 14			
202	600	43.2	4.5		12572	1004	609
203	600	32.0	4.5		12172	1447	612

Measure: Test section outlet temperature, °F
Test section inlet pressure, psig
Test section outlet pressure, psig
Cladding internal temperatures, °F
Spacer wire temperatures, °F
Hexagonal can temperature, °F

Table A.4. Test series 2, test 4

Purpose: To investigate core temperature patterns with laminar flow conditions in the test section at afterheat power levels

Control:

Run	Test section: Inlet temperature (°F)	Test section: Flow (gpm)	Test section: Power (kW/ft)	Test section: Heater	Date	Time	ØRRIBLE case
101	600	1.0	0.19	All	20472	1459	616
102	600	2.0	0.37	All	20472	1118	615
103	600	3.0	0.56	All	20472	949	614
104	600	4.0	0.74	All	20372	1443	613
105	600	5.0	0.93	All	20372	1054	627
201	600	1.0	0.37	All	30172	1432	626
202	600	2.0	0.74	All	30172	1324	625
203	600	3.0	1.11	All	22972	1423	624
204	600	4.0	1.48	All	22872	1602	620
205	600	5.0	1.85	All	22872	1421	621
205	600	5.0	1.85	All	22872	1450	622
205	600	5.0	1.85	All	22972	1037	623

Table A.5. Test series 2, test 6

Purpose: To determine mixing effects in a simulated segment of an FTR fuel subassembly by heating the centrally located seven heater pins

Control:

Run	Test section				Date	Time	ØRRIBLE case
	Inlet temperature (°F)	Flow (gpm)	Power (kW/ft)	Heaters			
101	600	54	10	1–7	30672	1309	631
102	600	40	10	1–7	32172	1033	680
103	600	30	10	1–7	32172	952	679
104	600	20	10	1–7			

Measure: Test section outlet temperature, °F
Cladding internal temperatures, °F
Spacer wire temperatures, °F
Hexagonal can temperatures, °F

Table A.6. Test series 2, test 9

Purpose: To further investigate effect of wire-wrap sweeping on hexagonal duct temperatures

Control:

Run	Test section				Date	Time	ØRRIBLE case
	Inlet temperature (°F)	Flow (gpm)	Power (kW/ft)	Heaters			
101	600	54	10	8, 18, 19	30672	1345	633
201	600	54	10	8, 9, 10	30672	1417	634
301	600	54	10	10, 11, 12	30672	1450	632
401	600	54	10	12, 13, 14	30772	850	635
501	600	54	10	14, 15, 16	30772	940	637
601	600	54	10	16, 17, 18	30772	1037	636

Table A.7. Test series 2, test 10

Purpose: To investigate the effect of heat flux and coolant flow on the test-section thermocouples

Control:

Run	Test section				Date	Time	ØRRIBLE case
	Inlet temperature (°F)	Flow (gpm)	Power (kW/ft)	Heater			
104	600	54	10	1	30872	1233	638
204	600	54	10	2	30872	1316	639
304	600	54	10	3	30872	1411	640
404	600	54	10	4	30872	1459	641
504	600	54	10	5	30972	831	642
604	600	54	10	6	30972	1003	643
704	600	54	10	7	30972	1035	644
804	600	54	10	8	30972	1101	645
904	600	54	10	9	30972	1132	646
1004	600	54	10	10	30972	1225	647
1104	600	54	10	11	30972	1255	648
1204	600	54	10	12	30972	1324	649
1304	600	54	10	13	30972	1351	650
1404	600	54	10	14	30972	1414	651
1504	600	54	10	15	30972	1439	652
1604	600	54	10	16	30972	1527	653
1704	600	54	10	17	30972	919	654
1804	600	54	10	18	30972	1507	655
1904	600	54	10	19	31072	915	656
104	600	54	10	1	30372	1215	629

Table A.8. Test series 2, test 13

Purpose: To investigate the effect of heat flux and coolant flow on the test-section thermocouples

Control:

Run	Test section: Inlet temperature (°F)	Test section: Flow (gpm)	Test section: Power (kW/ft)	Test section: Heater	Date	Time	ØRRIBLE case
104	600	11	8	1	31072	1347	657
204	600	11	8	2	31072	1417	658
304	600	11	8	3	31072	1452	659
404	600	11	8	7	31372	1432	660
504	600	11	8	8	31372	1451	661
604	600	11	8	9	31372	1511	662
704	600	11	8	6	31372	1358	663
804	600	11	8	5	31372	1336	664
904	600	11	8	4	31372	1311	665
1004	600	11	8	10	31472	904	666
1104	600	11	8	11	31472	933	667
1204	600	11	8	12	31472	1010	668
1304	600	11	8	13	31472	1033	669
1404	600	11	8	14	31472	1110	670
1504	600	11	8	15	31472	1157	671
1604	600	11	8	16	31472	1220	672
1704	600	11	8	17	31472	1302	673
1804	600	11	8	18	31472	1334	674
1904	600	11	8	19	31472	1358	675

Table A.9. Test series 2, test 11

Purpose: To investigate the steep power gradient at low power levels and low flows expected in LMFBR demonstration reactor blanket

Control:

Run	Test section: Inlet temperature (°F)	Test section: Flow (gpm)	Test section: Power (kW/ft)	Test section: Heaters	Date	Time	ØRRIBLE case
101	600	1	0.571 0.371 0.286 0.229 0.171	8, 18, 19 2, 7, 9, 17 1, 3, 6, 10, 16 4, 5, 11, 15 12, 13, 14	32872	1416	681
102	600	2	1.143 0.743 0.571 0.457 0.343	8, 18, 19 2, 7, 9, 17 1, 3, 6, 10, 16 4, 5, 11, 15 12, 13, 14	32972 32972	1101 1126	683 684
103	600	3	1.714 1.114 0.857 0.686 0.514	8, 18, 19 2, 7, 9, 17 1, 3, 6, 10, 16 4, 5, 11, 15 12, 13, 14	33072	959	686
104	600	4	2.286 1.486 1.143 0.914 0.686	8, 18, 19 2, 7, 9, 17 1, 3, 6, 10, 16 4, 5, 11, 15 12, 13, 14	33072	1401	688
201	600	1	0.171 0.229 0.286 0.371 0.571	8, 18, 19 2, 7, 9, 17 1, 3, 6, 10, 16 4, 5, 11, 15 12, 13, 14	32872	1524	682
202	600	2	0.343 0.457 0.571 0.743 0.143	8, 18, 19 2, 7, 9, 17 1, 3, 6, 10, 16 4, 5, 11, 15 12, 13, 14	32972	1242	685
203	600	3	0.514 0.680 0.857 1.114 1.714	8, 18, 19 2, 7, 9, 17 1, 3, 6, 10, 16 4, 5, 11, 15 12, 13, 14	33072	1056	687
204	600	4	0.686 0.914 0.143 1.486 2.286	8, 18, 19 2, 7, 9, 17 1, 3, 6, 10, 16 4, 5, 11, 15 12, 13, 14	33072	1458	689

Table A.10. Test series 2, test 14

Purpose: To impose 3/1 power skew on bundle to exaggerate temperature differences across the bundle and across the hexagonal flats to further investigate temperature anomalies seen in ±10% power skew runs

Control:

Run	Test section				Date	Time	ØRRIBLE case
	Inlet temperature (°F)	Flow (gpm)	Power (kW/ft)	Heaters			
101	600	54	7.50	8, 18, 19	42572	941	691
			6.25	2, 7, 9, 17			
			5.00	1, 3, 6, 10, 16			
			3.75	4, 5, 11, 15			
			2.50	12, 13, 14			
201	600	54	2.50	8, 18, 19	42572	1023	692
			3.75	2, 7, 9, 17			
			5.00	1, 3, 6, 10, 16			
			6.25	4, 5, 11, 15			
			7.50	12, 13, 14			

Table A.11. Test series 2, test 12

Purpose: To determine the effect of guard heat on bundle performance

Control:

Run	Test section: Inlet temperature (°F)	Test section: Flow (gpm)	Test section: Power (kW/ft)	Test section: Heater	Date	Time	ØRRIBLE case
101	600	54	5	All	32072	1027	676
102[a]	600	54	5	All	32072	1351	677
103[b]	600	54	5	All	32072	1533	678

[a]Guard heaters adjusted 100°F above test section temperature.

[b]Guard heaters turned off. Temperature approximately 60°F below test section temperature.

Appendix B

EXPERIMENTAL DATA

Appendix B consists of the tabulated experimental data. There are six tables on four pages for each run. The runs reported are 601–605 and 607–694; run 606 was isothermal, and no temperature distribution data were generated.

OPERATING DATA FOR FFM SERIES 2 TEST 2 RUN 101
WHICH WAS DONE ON 12072 1151

DESCRIPTION	MEAN VALUE	STANDARD DEVIATION
HEATER 1 POWER KW	3.44	0.009
HEATER 8,18,19 POWER	10.08	0.013
HTR 12,13,14 POWER	10.01	0.021
HTR 2,7,9,17 POWER	13.48	0.031
HTR 4,5,11,15 POWER	13.69	0.031
HTR 3,6,10,16 POWER	13.04	0.019
TOTAL POWER	63.22	0.114
TEST SECT FLOW, GPM	54.29	0.122
TEST SECT INLET PR	33.23	0.083
TEST SECT OUTLET PR	8.94	0.042
TOTAL FLOW, GPM	106.77	1.023
PUMP OUTLET PR, PSI	34.50	0.064
PUMP SPEED, RPM	1473.83	0.937
BLOWER SPEED, RPM	186.11	2.711
AIR FLOW (200 F) CFM	1.06	0.006
TC 313 TEST SECT IN	581.02	1.841
TC 317 TEST SECT OUT	611.84	2.088
TC 300 PUMP OUTLET	580.40	1.874
TC 319 RADIATOR IN	613.59	2.518
TC 334 RADIATOR OUT	578.88	2.026
TC 336 PUMP INLET	580.51	1.876
TC 332 RAD AIR IN	100.63	0.527
TC 331 RAD AIR OUT	287.40	1.582

HEAT BALANCE ON SODIUM FLOWING THROUGH BUNDLE
HEAT SUPPLIED BY DUMMY FUEL RODS = 217672.00 BTU/HR
HEAT ADDED TO SODIUM = 227098.88 BTU/HR
PERCENT HEAT BALANCE = 104.33

RESULTS FOR UNGROUNDED JUNCTION THERMOCOUPLES
FFM SERIES 2 TEST 2 RUN 101 DONE ON 12072 1151

DESCRIPTION	TEMP DEG F	STD DEV	RISE AB INLET T	NORMALIZED TEMP
TC 1504U CH 37	587.5	1.746	6.45	0.218
TC 1706U CH 21	595.1	1.833	14.06	0.476
TC 1807U CH 24	600.0	1.983	18.94	0.641
TC 1108U CH 31	595.3	1.929	14.30	0.484
TC 0409U CH 13	601.4	1.975	20.40	0.691
TC 0509U CH 3	602.2	1.947	21.21	0.718
TC 1009U CH 29	591.7	1.812	10.65	0.361
TC 1409U CH 17	599.1	1.962	18.12	0.613
TC 1609U CH 21	599.8	1.978	18.73	0.634
TC 1914U CH 24	598.6	1.836	17.59	0.595
TC 0815U CH 8	609.8	1.830	28.83	0.976
TC 1316U CH 35	607.3	1.965	26.29	0.890
TC 1516U CH 37	603.6	2.024	22.56	0.764
TC 0817U CH 9	612.7	1.950	31.70	1.073
TC 1217U CH 33	603.9	2.009	22.89	0.775
TC 1318U CH 34	602.2	1.912	21.15	0.716
TC 1718U CH 22	615.3	1.946	34.29	1.161
TC 1219U CH 32	604.9	1.871	23.85	0.807
TC 1819U CH 24	610.0	1.952	28.98	0.981
TC 1120U CH 31	605.1	2.230	24.12	0.817
TC 0421U CH 13	623.1	1.995	42.07	1.424
TC 0521U CH 3	622.5	2.005	41.48	1.404
TC 1021U CH 29	605.6	1.915	24.61	0.833
TC 1421U CH 17	618.0	1.826	36.98	1.252
TC 1621U CH 21	616.4	2.011	35.37	1.197

RESULTS FOR GROUNDED JUNCTION THERMOCOUPLES
FFM SERIES 2 TEST 2 RUN 101 DONE ON 12072 1151

DESCRIPTION	TEMP DEG F	STD DEV	RISE AB INLET T	NORMALIZED TEMP
TC 0118C CH 3	619.5	1.826	38.51	1.304
TC 0618D CH 4	616.9	2.112	35.85	1.214
TC 0618C CH 19	615.1	1.788	34.12	1.155
TC 0219A HEATER 2	617.2	1.764	36.19	1.225
TC 0219B CH 10	613.6	1.731	32.59	1.103
TC 0919A HTR 9 EXT	615.5	1.897	34.47	1.167
TC 0919B CH 29	610.5	1.725	29.51	0.999
TC 0718C CH 5	620.1	2.083	39.09	1.323
TC 0718D CH 6	617.7	2.286	36.70	1.242
TC 0319A HEATER 3	617.4	1.980	36.39	1.232
TC 0319B CH 12	612.2	1.825	31.18	1.055

RESULTS FOR DUCT WALL THERMOCOUPLES
FFM SERIES 2 TEST 2 RUN 101 DONE ON 12072 1151

DESCRIPTION	TEMP DEG F	STD DEV	RISE AB INLET T	NORMALIZED TEMP
TC DOB04 DUCT B	584.0	2.211	3.03	0.103
TC DOE04 DUCT E	582.1	1.846	1.13	0.038
TC DOF04 DUCT F	582.2	1.816	1.14	0.039
TC DOB08 DUCT B	589.6	1.865	8.63	0.292
TC DOD08 DUCT D	586.0	1.926	4.97	0.168
TC DOF08 DUCT F	586.5	1.859	5.47	0.185
TC DOB12 DUCT B	584.2	1.970	3.20	0.108
TC DOE12 DUCT E	591.3	2.002	10.24	0.347
TC DOF12 DUCT F	588.1	1.789	7.10	0.240
TC DOB16 DUCT B	598.1	1.769	17.10	0.579
TC DOD16 DUCT D	590.1	2.164	9.13	0.309
TC DOF16 DUCT F	593.8	1.930	12.74	0.431
TC DOD18 DUCT D	593.0	1.877	11.97	0.405
TC DOE18 DUCT E	594.8	2.010	13.75	0.465
TC DAB18 DUCT AB	596.6	1.855	15.60	0.528
TC DDE18 DUCT DE	593.6	1.770	12.54	0.425
TC DEF18 DUCT EF	595.6	1.909	14.63	0.495
TC DOF18 DUCT F	596.7	1.836	15.70	0.531
TC DFA18 DUCT FA	596.6	2.024	15.55	0.526
TC DOB21 DUCT B	597.7	1.962	16.64	0.563
TC DOD21 DUCT D	597.2	1.943	16.17	0.547
TC DOF21 DUCT F	601.0	2.125	20.02	0.678
TC DOB23 DUCT B	600.3	2.028	19.27	0.652
TC DOD23 DUCT D	600.8	1.834	19.73	0.668
TC DOF23 DUCT F	604.0	1.847	22.98	0.778

RESULTS FOR THERMOCOUPLES IN CHANNEL EXITS
FFM SERIES 2 TEST 2 RUN 101 DONE ON 12072 1151

DESCRIPTION	TEMP DEG F	STD DEV	RISE AB INLET T	NORMALIZED TEMP
TC EC03 EXIT CH 3	619.2	1.923	38.22	1.294
TC EC16 EXIT CH 16	612.6	1.979	31.61	1.070
TC EC17 EXIT CH 17	611.4	2.092	30.41	1.029
TC EC34 EXIT CH 34	606.5	1.914	25.51	0.864
TC EC35 EXIT CH 35	607.3	1.884	26.32	0.891
TC EC36 EXIT CH 36	607.9	2.046	26.91	0.911
TC EC06 EXIT CH 6	621.3	2.056	40.25	1.363
TC EC08 EXIT CH 8	611.0	1.871	29.95	1.014
TC EC27 EXIT CH 27	606.5	1.906	25.45	0.862
TC EA36 EXIT ANN EF	606.9	1.862	25.91	0.877
TC EA27 EXIT ANN BC	607.4	1.977	26.37	0.893
TC EA28 EXIT ANN C	606.7	1.869	25.65	0.868

RESULTS FOR THERMOCOUPLES INSIDE HEATERS
FFM SERIES 2 TEST 2 RUN 101 DONE ON 12072 1151

DESCRIPTION	TEMP DEG F	STD DEV	RISE AB INLET T	NORMALIZED TEMP
TC R0118AB HTR 1 INT	637.9	2.800	56.87	1.925
TC R0219AB HTR 2 INT	634.0	2.856	52.95	1.792
TC R0418AB HTR 4 INT	653.6	3.877	72.56	2.456
TC R0518AB HTR 5 INT	639.6	2.113	58.61	1.984
TC R1218AB HEATER 12	628.9	1.735	47.85	1.620
TC R1318DE HEATER 13	641.2	2.301	60.19	2.038
TC R1418AB HEATER 14	637.0	3.023	55.95	1.894
TC R1618AB HEATER 16	643.8	2.655	62.75	2.124
TC R1718AB HEATER 17	634.5	2.019	53.52	1.812
TC R1817AB HEATER 18	631.3	3.255	50.31	1.703
TC R1918CD HEATER 19	642.1	2.799	61.08	2.068
TC R0118BC HEATER 1	645.4	2.665	64.41	2.180
TC R0118CD HEATER 1	650.2	2.235	69.16	2.341
TC R0118DE HEATER 1	644.9	2.128	63.89	2.163
TC R0219BC HEATER 2	649.3	12.070	68.27	2.311
TC R0418BC HEATER 4	649.1	3.163	68.12	2.306
TC R0418CD HEATER 4	640.9	2.174	59.91	2.028
TC R0418DE HEATER 4	643.1	2.188	62.09	2.102
TC R0518BC HEATER 5	632.3	1.675	51.26	1.735
TC R0518CD HEATER 5	642.5	3.219	61.51	2.082
TC R0718BC HEATER 7	638.4	2.897	57.39	1.943
TC R0718CD HEATER 7	637.6	3.244	56.55	1.914
TC R0718DE HEATER 7	631.4	1.421	50.37	1.705
TC R0818BC HEATER 8	639.9	1.826	58.85	1.992
TC R1718BC HEATER 17	639.1	2.338	58.06	1.965
TC R1918BC HEATER 19	639.8	1.733	58.75	1.989
TC R1918DE HEATER 19	631.9	3.824	50.93	1.724

OPERATING DATA FOR FFM SERIES 2 TEST 2 RUN 102
WHICH WAS DONE ON 12172 915

DESCRIPTION	MEAN VALUE	STANDARD DEVIATION
HEATER 1 POWER KW	6.95	0.013
HEATER 8,18,19 POWER	20.35	0.030
HTR 12,13,14 POWER	20.20	0.032
HTR 2,7,9,17 POWER	27.42	0.058
HTR 4,5,11,15 POWER	27.55	0.039
HTR 3,6,10,16 POWER	26.41	0.042
TOTAL POWER	127.67	0.195
TEST SECT FLOW, GPM	54.36	0.062
TEST SECT INLET PR	33.06	0.112
TEST SECT OUTLET PR	8.97	0.047
TOTAL FLOW, GPM	107.56	1.112
PUMP OUTLET PR, PSI	34.23	0.072
PUMP SPEED, RPM	1478.80	0.789
BLOWER SPEED, RPM	488.11	0.624
AIR FLOW (200 F) CFM	2.63	0.143
TC 313 TEST SECT IN	601.76	0.791
TC 317 TEST SECT OUT	663.56	0.776
TC 300 PUMP OUTLET	601.66	0.742
TC 318 RADIATOR IN	660.84	1.633
TC 334 RADIATOR OUT	596.00	0.695
TC 336 PUMP INLET	600.74	0.844
TC 332 RAD AIR IN	94.13	0.305
TC 331 RAD AIR OUT	206.10	0.659

HEAT BALANCE ON SODIUM FLOWING THROUGH BUNDLE
HEAT SUPPLIED BY DUMMY FUEL RODS = 440125.00 BTU/HR
HEAT ADDED TO SODIUM = 453419.94 BTU/HR
PERCENT HEAT BALANCE = 103.02

RESULTS FOR UNGROUNDED JUNCTION THERMOCOUPLES
FFM SERIES 2 TEST 2 RUN 102 DONE ON 12172 915

DESCRIPTION	TEMP DEG F	STD DEV	RISE AB INLET T	NORMALIZED TEMP
TC 1504U CH 37	615.7	0.835	13.92	0.232
TC 1706U CH 21	629.9	0.812	28.14	0.469
TC 1807U CH 24	640.0	0.628	38.26	0.638
TC 1108U CH 31	631.0	0.766	29.20	0.487
TC 0409U CH 13	644.8	0.776	43.04	0.717
TC 0509U CH 3	644.9	0.835	43.18	0.720
TC 1009U CH 29	624.7	0.917	22.94	0.382
TC 1409U CH 17	638.0	0.972	36.24	0.604
TC 1609U CH 21	639.5	0.926	37.70	0.628
TC 1914U CH 24	638.2	0.739	36.40	0.607
TC 0815U CH 8	660.4	0.718	58.66	0.978
TC 1316U CH 35	655.5	0.887	53.76	0.896
TC 1516U CH 37	646.2	0.773	44.44	0.741
TC 0817U CH 9	666.6	0.903	64.86	1.081
TC 1217U CH 33	648.7	0.845	46.90	0.782
TC 1318U CH 34	645.4	0.705	43.68	0.728
TC 1718U CH 22	667.6	0.998	65.80	1.097
TC 1219U CH 32	650.5	1.292	48.70	0.812
TC 1819U CH 24	662.0	0.934	60.26	1.005
TC 1120U CH 31	652.5	2.107	50.70	0.845
TC 0421U CH 13	687.3	1.037	85.52	1.426
TC 0521U CH 3	688.1	1.075	86.36	1.440
TC 1021U CH 29	651.1	1.178	49.32	0.822
TC 1421U CH 17	676.9	1.244	75.16	1.253
TC 1621U CH 21	674.6	1.285	72.80	1.214

RESULTS FOR GROUNDED JUNCTION THERMOCOUPLES
FFM SERIES 2 TEST 2 RUN 102 DONE ON 12172 915

DESCRIPTION	TEMP DEG F	STD DEV	RISE AB INLET T	NORMALIZED TEMP
TC 0118C CH 3	680.9	1.586	79.12	1.319
TC 0618D CH 4	675.9	1.406	74.12	1.236
TC 0618C CH 19	672.4	1.558	70.64	1.178
TC 0219A HEATER 2	679.1	1.128	77.38	1.290
TC 0219B CH 10	672.6	1.605	70.84	1.181
TC 0919A HTR 9 EXT	672.2	2.688	70.42	1.174
TC 0919B CH 29	663.4	1.331	61.62	1.027
TC 0718C CH 5	680.6	1.722	78.82	1.314
TC 0718D CH 6	677.1	1.135	75.30	1.255
TC 0319A HEATER 3	677.5	0.942	75.78	1.263
TC 0319B CH 12	666.6	1.186	64.86	1.081

RESULTS FOR DUCT WALL THERMOCOUPLES
FEM SERIES 2 TEST 2 RUN 102 DONE ON 12172 915

DESCRIPTION	TEMP DEG F	STD DEV	RISE AB INLET T	NORMALIZED TEMP
TC D0B04 DUCT B	605.8	0.648	4.06	0.068
TC D0E04 DUCT E	604.6	0.923	2.86	0.048
TC D0F04 DUCT F	604.8	1.010	3.00	0.050
TC D0B08 DUCT B	618.6	0.679	16.86	0.281
TC D0D08 DUCT D	611.8	1.112	10.08	0.168
TC D0F08 DUCT F	613.6	0.840	11.84	0.197
TC D0B12 DUCT B	607.8	1.018	6.04	0.101
TC D0E12 DUCT E	622.3	1.323	20.50	0.342
TC D0F12 DUCT F	617.7	0.911	15.94	0.266
TC D0B16 DUCT B	635.4	2.028	33.62	0.560
TC D0D16 DUCT D	622.3	0.795	20.54	0.342
TC D0F16 DUCT F	627.3	0.739	25.58	0.426
TC D0D18 DUCT D	625.3	0.774	23.50	0.392
TC D0E18 DUCT E	630.9	0.766	29.14	0.486
TC DAB18 DUCT AB	633.7	0.860	31.98	0.533
TC DDE18 DUCT DE	628.4	0.834	26.66	0.444
TC DEF18 DUCT EF	630.5	0.896	28.78	0.480
TC D0F18 DUCT F	633.2	0.889	31.42	0.524
TC DFA18 DUCT FA	634.5	0.925	32.76	0.546
TC D0B21 DUCT B	635.0	1.267	33.24	0.554
TC D0D21 DUCT D	633.6	0.963	31.86	0.531
TC D0F21 DUCT F	645.1	1.482	43.30	0.722
TC D0B23 DUCT B	640.0	1.121	38.26	0.638
TC D0D23 DUCT D	640.0	1.295	38.28	0.638
TC D0F23 DUCT F	649.3	1.209	47.58	0.793

RESULTS FOR THERMOCOUPLES IN CHANNEL EXITS
FEM SERIES 2 TEST 2 RUN 102 DONE ON 12172 915

DESCRIPTION	TEMP DEG F	STD DEV	RISE AB INLET T	NORMALIZED TEMP
TC EC03 EXIT CH 3	677.8	1.124	76.00	1.267
TC EC16 EXIT CH 16	671.2	1.250	69.44	1.158
TC EC17 EXIT CH 17	658.2	1.415	56.48	0.942
TC EC34 EXIT CH 34	652.8	1.351	51.00	0.850
TC EC35 EXIT CH 35	653.4	1.114	51.68	0.862
TC EC36 EXIT CH 36	655.2	1.047	53.48	0.892
TC EC06 EXIT CH 6	678.9	1.182	77.16	1.286
TC EC08 EXIT CH 8	666.8	0.865	65.06	1.085
TC EC27 EXIT CH 27	653.3	1.086	51.56	0.860
TC EA36 EXIT ANN EF	656.7	0.938	54.90	0.915
TC EA27 EXIT ANN BC	655.3	1.133	53.52	0.892
TC EA28 EXIT ANN C	654.0	0.730	52.26	0.871

RESULTS FOR THERMOCOUPLES INSIDE HEATERS
FFM SERIES 2 TEST 2 RUN 102 DONE ON 12172 915

DESCRIPTION	TEMP DEG F	STD DEV	RISE AB INLET T	NORMALIZED TEMP
TC R0118AB HTR 1 INT	719.4	2.364	117.64	1.961
TC R0219AB HTR 2 INT	728.5	5.051	126.74	2.113
TC R0418AB HTR 4 INT	734.9	5.068	133.14	2.219
TC R0518AB HTR 5 INT	713.8	5.876	112.08	1.868
TC R1218AB HEATER 12	695.0	1.548	93.26	1.555
TC R1318DE HEATER 13	721.0	1.512	119.20	1.987
TC R1418AB HEATER 14	710.5	1.718	108.74	1.813
TC R1618AB HEATER 16	730.9	4.725	129.14	2.153
TC R1718AB HEATER 17	711.2	3.059	109.48	1.825
TC R1817AB HEATER 18	699.7	3.602	97.94	1.633
TC R1918CD HEATER 19	712.9	3.536	111.14	1.853
TC R0118BC HEATER 1	729.2	2.261	127.44	2.124
TC R0118CD HEATER 1	743.0	1.214	141.22	2.354
TC R0118DE HEATER 1	731.7	1.991	129.92	2.166
TC R0219BC HEATER 2	727.8	13.760	126.08	2.102
TC R0418BC HEATER 4	729.8	2.111	128.04	2.134
TC R0418CD HEATER 4	723.7	2.337	121.94	2.033
TC R0418DE HEATER 4	731.5	1.146	129.76	2.163
TC R0518BC HEATER 5	716.7	3.607	114.98	1.917
TC R0518CD HEATER 5	718.4	4.263	116.66	1.945
TC R0718BC HEATER 7	717.0	1.469	115.24	1.921
TC R0718CD HEATER 7	710.9	5.904	109.18	1.820
TC R0718DE HEATER 7	717.2	4.315	115.46	1.925
TC R0818BC HEATER 8	727.4	1.577	125.68	2.095
TC R1718BC HEATER 17	721.3	2.099	119.50	1.992
TC R1918BC HEATER 19	725.8	1.897	124.02	2.067
TC R1918DE HEATER 19	713.1	5.287	111.32	1.856

OPERATING DATA FOR FFM SERIES -2 TEST 2 RUN 103
WHICH WAS DONE ON 12172 1037

DESCRIPTION	MEAN VALUE	STANDARD DEVIATION
HEATER 1 POWER KW	10.45	0.014
HEATER 8,18,19 POWER	30.93	0.048
HTR 12,13,14 POWER	30.16	0.048
HTR 2,7,9,17 POWER	41.10	0.054
HTR 4,5,11,15 POWER	41.25	0.057
HTR 3,6,10,16 POWER	40.10	0.065
TOTAL POWER	191.94	0.261
TEST SECT FLOW, GPM	54.78	0.087
TEST SECT INLET PR	33.27	0.144
TEST SECT OUTLET PR	9.00	0.085
TOTAL FLOW, GPM	108.34	1.256
PUMP OUTLET PR, PSI	34.40	0.052
PUMP SPEED, RPM	1487.00	0.707
BLOWER SPEED, RPM	1009.40	0.548
AIR FLOW (200 F) CFM	15.14	0.328
TC 313 TEST SECT IN	600.19	0.494
TC 317 TEST SECT OUT	693.58	0.410
TC 300 PUMP OUTLET	600.80	0.498
TC 318 RADIATOR IN	691.77	0.451
TC 334 RADIATOR OUT	585.13	0.919
TC 336 PUMP INLET	599.98	0.297
TC 332 RAD AIR IN	88.55	0.304
TC 331 RAD AIR OUT	166.10	0.091

HEAT BALANCE ON SODIUM FLOWING THROUGH BUNDLE
HEAT SUPPLIED BY DUMMY FUEL RODS = 662475.69 BTU/HR
HEAT ADDED TO SODIUM = 690805.75 BTU/HR
PERCENT HEAT BALANCE = 104.28

RESULTS FOR DUCT WALL THERMCCOUPLES
FFM SERIES 2 TEST 2 RUN 103 DONE ON 12172 1037

DESCRIPTION	TEMP DEG F	STD DEV	RISE AB INLET T	NORMALIZED TEMP
TC DOB04 DUCT B	607.8	0.581	7.58	0.085
TC DOE04 DUCT E	605.0	0.512	4.86	0.054
TC DOF04 DUCT F	605.5	0.520	5.28	0.059
TC DOB08 DUCT B	625.5	0.452	25.32	0.283
TC DOD08 DUCT D	615.0	0.456	14.81	0.165
TC DOF08 DUCT F	618.3	0.485	18.14	0.203
TC DOB12 DUCT B	610.9	0.297	10.75	0.120
TC DOE12 DUCT E	628.4	0.312	28.26	0.316
TC DOF12 DUCT F	624.3	0.297	24.11	0.269
TC DOB16 DUCT B	651.2	0.494	51.02	0.570
TC DOD16 DUCT D	631.2	0.498	31.05	0.347
TC DOF16 DUCT F	638.9	0.426	38.73	0.432
TC DOD18 DUCT D	635.8	0.290	35.62	0.398
TC DOE18 DUCT E	644.1	0.297	43.87	0.490
TC DAB18 DUCT AB	648.0	0.266	47.80	0.534
TC DDE18 DUCT DE	641.2	0.670	40.98	0.458
TC DEF18 DUCT EF	644.2	0.297	44.05	0.492
TC DOF18 DUCT F	647.8	0.410	47.61	0.532
TC DFA18 DUCT FA	649.0	0.494	48.86	0.546
TC DOB21 DUCT B	648.5	0.402	48.31	0.539
TC DOD21 DUCT D	646.9	0.330	46.76	0.522
TC DOF21 DUCT F	663.7	0.550	63.48	0.709
TC DOB23 DUCT B	656.8	0.551	56.66	0.633
TC DOD23 DUCT D	657.3	0.613	57.16	0.638
TC DOF23 DUCT F	671.4	0.402	71.23	0.795

RESULTS FOR THERMOCOUPLES IN CHANNEL EXITS
FFM SERIES 2 TEST 2 RUN 103 DONE ON 12172 1037

DESCRIPTION	TEMP DEG F	STD DEV	RISE AB INLET T	NORMALIZED TEMP
TC EC03 EXIT CH 3	713.9	0.556	113.68	1.269
TC EC16 EXIT CH 16	705.9	0.550	105.72	1.180
TC EC17 EXIT CH 17	680.7	0.579	80.50	0.899
TC EC34 EXIT CH 34	675.5	0.308	75.27	0.840
TC EC35 EXIT CH 35	676.9	0.402	76.71	0.857
TC EC36 EXIT CH 36	681.3	0.471	81.13	0.906
TC EC06 EXIT CH 6	714.0	0.429	113.80	1.271
TC EC08 EXIT CH 8	696.1	0.189	95.88	1.071
TC EC27 EXIT CH 27	673.9	0.480	73.76	0.824
TC EA36 EXIT ANN EF	682.5	0.388	82.28	0.919
TC EA27 EXIT ANN BC	674.8	0.377	74.64	0.833
TC EA28 EXIT ANN C	677.3	0.290	77.12	0.861

RESULTS FOR UNGROUNDED JUNCTION THERMOCOUPLES
FFM SERIES 2 TEST 2 RUN 103 DONE ON 12172 1037

DESCRIPTION	TEMP DEG F	STD DEV	RISE AB INLET T	NORMALIZED TEMP
TC 1504U CH 37	620.6	0.266	20.42	0.228
TC 1706U CH 21	643.6	0.410	43.39	0.484
TC 1807U CH 24	657.7	0.266	57.54	0.642
TC 1108U CH 31	643.8	0.332	43.58	0.487
TC 0409U CH 13	666.5	0.670	66.30	0.740
TC 0509U CH 3	664.4	0.480	64.24	0.717
TC 1009U CH 29	634.7	0.426	34.47	0.385
TC 1409U CH 17	654.8	0.297	54.59	0.610
TC 1609U CH 21	656.4	0.451	56.22	0.628
TC 1914U CH 24	655.7	0.266	55.52	0.620
TC 0815U CH 8	689.0	0.333	88.84	0.992
TC 1316U CH 35	681.0	0.266	80.78	0.902
TC 1516U CH 37	667.4	0.332	67.26	0.751
TC 0817U CH 9	698.2	0.494	98.00	1.094
TC 1217U CH 33	670.9	0.498	70.69	0.789
TC 1318U CH 34	666.3	0.383	66.11	0.738
TC 1718U CH 22	699.3	0.297	99.07	1.106
TC 1219U CH 32	673.0	0.379	72.78	0.813
TC 1819U CH 24	689.4	0.471	89.23	0.996
TC 1120U CH 31	679.1	0.625	78.88	0.881
TC 0421U CH 13	728.0	0.402	127.85	1.428
TC 0521U CH 3	728.8	0.402	128.65	1.436
TC 1021U CH 29	673.4	0.566	73.21	0.817
TC 1421U CH 17	712.3	0.432	112.07	1.251
TC 1621U CH 21	706.7	0.308	106.53	1.189

RESULTS FOR GROUNDED JUNCTION THERMOCOUPLES
FFM SERIES 2 TEST 2 RUN 103 DONE ON 12172 1037

DESCRIPTION	TEMP DEG F	STD DEV	RISE AB INLET T	NORMALIZED TEMP
TC 0118C CH 3	718.7	0.514	118.50	1.323
TC 0618D CH 4	710.5	0.204	110.27	1.231
TC 0618C CH 19	704.6	0.487	104.40	1.166
TC 0219A HEATER 2	718.9	0.719	118.72	1.326
TC 0219B CH 10	704.7	0.801	104.54	1.167
TC 0919A HTR 9 EXT	713.3	0.601	113.09	1.263
TC 0919B CH 29	695.2	0.444	94.98	1.061
TC 0718C CH 5	719.1	0.131	118.94	1.328
TC 0718D CH 6	711.4	0.518	111.23	1.242
TC 0319A HEATER 3	710.9	0.340	110.70	1.236
TC 0319B CH 12	697.4	0.698	97.23	1.086

RESULTS FOR THERMOCOUPLES INSIDE HEATERS
FFM SERIES 2 TEST 2 RUN 103 DONE ON 12172 1037

DESCRIPTION	TEMP DEG F	STD DEV	RISE AB INLET T	NORMALIZED TEMP
TC R0118AB HTR 1 INT	777.0	0.953	176.84	1.975
TC R0219AB HTR 2 INT	764.8	1.601	164.64	1.838
TC R0418AB HTR 4 INT	810.5	1.047	210.30	2.348
TC R0518AB HTR 5 INT	770.3	0.319	170.13	1.900
TC R1218AB HEATER 12	738.2	0.487	137.98	1.541
TC R1318DE HEATER 13	779.0	0.551	178.86	1.997
TC R1418AB HEATER 14	763.6	0.686	163.38	1.824
TC R1618AB HEATER 16	797.0	2.520	196.82	2.198
TC R1718AB HEATER 17	760.2	0.379	160.04	1.787
TC R1817AB HEATER 18	734.0	1.627	133.83	1.494
TC R1918CD HEATER 19	764.6	1.022	164.38	1.835
TC R0118BC HEATER 1	795.2	2.577	195.04	2.178
TC R0118CD HEATER 1	807.7	0.557	207.48	2.317
TC R0118DE HEATER 1	794.9	0.175	194.72	2.174
TC R0219BC HEATER 2	788.4	21.754	188.26	2.102
TC R0418BC HEATER 4	787.9	0.874	187.74	2.096
TC R0418CD HEATER 4	782.0	0.542	181.83	2.030
TC R0418DE HEATER 4	792.1	0.248	191.91	2.143
TC R0518BC HEATER 5	770.3	1.664	170.09	1.899
TC R0518CD HEATER 5	776.1	0.579	175.96	1.965
TC R0718BC HEATER 7	772.4	0.352	172.26	1.923
TC R0718CD HEATER 7	773.3	2.335	173.06	1.932
TC R0718DE HEATER 7	768.0	1.957	167.80	1.874
TC R0818BC HEATER 8	787.4	0.590	187.25	2.091
TC R1718BC HEATER 17	763.9	0.388	163.68	1.828
TC R1918BC HEATER 19	779.7	0.861	179.47	2.004
TC R1918DE HEATER 19	772.1	0.865	171.93	1.920

OPERATING DATA FOR FFM SERIES 2 TEST 2 RUN 104
WHICH WAS DONE ON 21072 1140

DESCRIPTION	MEAN VALUE	STANDARD DEVIATION
HEATER 1 POWER KW	14.41	0.015
HEATER 8,18,19 POWER	42.26	0.030
HTR 12,13,14 POWER	41.74	0.065
HTR 2,7,9,17 POWER	57.03	0.064
HTR 4,5,11,15 POWER	56.50	0.047
HTR 3,6,10,16 POWER	55.44	0.033
TOTAL POWER	264.93	0.082
TEST SECT FLOW, GPM	54.37	0.115
TEST SECT INLET PR	32.31	0.107
TEST SECT OUTLET PR	8.68	0.041
TOTAL FLOW, GPM	109.88	1.636
PUMP OUTLET PR, PSI	33.98	0.080
PUMP SPEED, RPM	1458.33	1.033
BLOWER SPEED, RPM	1128.00	0.0
AIR FLOW (200 F) CFM	19.69	0.422
TC 313 TEST SECT IN	684.26	0.130
TC 317 TEST SECT OUT	815.03	0.207
TC 300 PUMP OUTLET	685.26	1.256
TC 318 RADIATOR IN	813.42	0.138
TC 334 RADIATOR OUT	672.34	0.093
TC 336 PUMP INLET	685.27	0.247
TC 332 RAD AIR IN	76.65	0.452
TC 331 RAD AIR OUT	165.77	0.207

HEAT BALANCE ON SODIUM FLOWING THROUGH BUNDLE
HEAT SUPPLIED BY DUMMY FUEL RODS = 913102.25 BTU/HR
HEAT ADDED TO SODIUM = 939262.25 BTU/HR
PERCENT HEAT BALANCE = 102.86

RESULTS FOR UNGROUNDED JUNCTION THERMOCOUPLES
FFM SERIES 2 TEST 2 RUN 104 DONE ON 21072 1140

DESCRIPTION	TEMP DEG F	STD DEV	RISE AB INLET T	NORMALIZED TEMP
TC 1504U CH 37	713.1	0.168	28.81	0.227
TC 1706U CH 21	745.6	0.257	61.37	0.483
TC 1807U CH 24	765.1	0.322	80.84	0.636
TC 1108U CH 31	746.1	0.181	61.80	0.486
TC 0409U CH 13	777.3	0.285	93.01	0.732
TC 0509U CH 3	776.1	0.298	91.88	0.723
TC 1009U CH 29	731.9	0.219	47.64	0.375
TC 1409U CH 17	761.6	0.225	77.37	0.609
TC 1609U CH 21	764.0	0.315	79.71	0.627
TC 1914U CH 24	763.8	0.177	79.57	0.626
TC 0815U CH 8	811.6	0.299	127.32	1.002
TC 1316U CH 35	799.3	0.157	115.01	0.905
TC 1516U CH 37	779.0	0.256	94.75	0.745
TC 0817U CH 9	825.7	0.147	141.43	1.113
TC 1217U CH 33	783.9	0.239	99.68	0.784
TC 1318U CH 34	778.8	0.332	94.50	0.743
TC 1718U CH 22	826.0	0.170	141.71	1.115
TC 1219U CH 32	788.9	0.467	104.65	0.823
TC 1819U CH 24	813.6	0.347	129.38	1.018
TC 1120U CH 31	798.1	0.261	113.85	0.896
TC 0421U CH 13	867.0	0.276	182.78	1.438
TC 0521U CH 3	869.9	0.421	185.68	1.461
TC 1021U CH 29	791.0	0.368	106.77	0.840
TC 1421U CH 17	845.0	0.296	160.75	1.264
TC 1621U CH 21	836.4	0.318	152.17	1.197

RESULTS FOR GROUNDED JUNCTION THERMOCOUPLES
FFM SERIES 2 TEST 2 RUN 104 DONE ON 21072 1140

DESCRIPTION	TEMP DEG F	STD DEV	RISE AB INLET T	NORMALIZED TEMP
TC 0118C CH 3	854.7	0.708	170.45	1.341
TC 0618D CH 4	842.4	0.391	158.15	1.244
TC 0618C CH 19	834.2	0.396	149.95	1.180
TC 0219A HEATER 2	856.5	0.756	172.22	1.355
TC 0219B CH 10	836.0	0.552	151.75	1.194
TC 0919A HTR 9 EXT	847.0	0.782	162.79	1.281
TC 0919B CH 29	823.2	0.623	138.97	1.093
TC 0718C CH 5	856.1	0.280	171.81	1.351
TC 0718D CH 6	843.9	0.684	159.63	1.256
TC 0319A HEATER 3	845.3	0.470	161.03	1.267
TC 0319B CH 12	825.5	0.718	141.24	1.111

RESULTS FOR DUCT WALL THERMOCOUPLES
FFM SERIES 2 TEST 2 RUN 104 DONE ON 21072 1140

DESCRIPTION	TEMP DEG F	STD DEV	RISE AB INLET T	NORMALIZED TEMP
TC D0B04 DUCT B	693.0	0.298	8.78	0.069
TC D0E04 DUCT E	690.6	0.172	6.39	0.050
TC D0F04 DUCT F	690.8	0.075	6.58	0.052
TC D0B08 DUCT B	719.5	0.075	35.28	0.278
TC D0D08 DUCT D	703.7	0.344	19.46	0.153
TC D0F08 DUCT F	709.8	0.157	25.49	0.201
TC D0B12 DUCT B	697.0	0.281	12.72	0.100
TC D0E12 DUCT E	722.7	0.093	38.44	0.302
TC D0F12 DUCT F	717.4	0.090	33.19	0.261
TC D0B16 DUCT B	754.1	0.230	69.84	0.549
TC D0D16 DUCT D	726.5	0.078	42.25	0.332
TC D0F16 DUCT F	739.2	0.234	54.91	0.432
TC D0D18 DUCT D	733.9	0.172	49.69	0.391
TC D0E18 DUCT E	746.6	0.147	62.33	0.490
TC DAB18 DUCT AB	751.4	0.236	67.14	0.528
TC DDE18 DUCT DE	734.1	0.172	49.89	0.392
TC DEF18 DUCT EF	745.8	0.178	61.59	0.484
TC D0F18 DUCT F	751.7	0.167	67.48	0.531
TC DFA18 DUCT FA	752.2	0.161	67.90	0.534
TC D0B21 DUCT B	751.3	0.280	66.99	0.527
TC D0D21 DUCT D	752.2	0.270	67.95	0.535
TC D0F21 DUCT F	787.8	0.349	103.49	0.814
TC D0B23 DUCT B	759.2	0.371	74.90	0.589
TC D0D23 DUCT D	764.2	0.333	79.94	0.629
TC D0F23 DUCT F	787.1	0.369	102.84	0.809

RESULTS FOR THERMOCOUPLES IN CHANNEL EXITS
FFM SERIES 2 TEST 2 RUN 104 DONE ON 21072 1140

DESCRIPTION	TEMP DEG F	STD DEV	RISE AB INLET T	NORMALIZED TEMP
TC EC03 EXIT CH 3	847.8	0.460	163.51	1.286
TC EC16 EXIT CH 16	835.1	0.295	150.88	1.187
TC EC17 EXIT CH 17	802.5	0.376	118.29	0.930
TC EC34 EXIT CH 34	793.1	0.351	108.80	0.856
TC EC35 EXIT CH 35	794.7	0.379	110.48	0.869
TC EC36 EXIT CH 36	798.5	0.371	114.28	0.899
TC EC06 EXIT CH 6	852.1	0.144	167.88	1.321
TC EC08 EXIT CH 8	824.3	0.590	140.02	1.101
TC EC27 EXIT CH 27	788.9	0.705	104.69	0.824
TC EA36 EXIT ANN EF	798.5	0.633	114.23	0.899
TC EA27 EXIT ANN BC	791.7	0.461	107.45	0.845
TC EA28 EXIT ANN C	794.1	0.399	109.83	0.864

RESULTS FOR THERMOCOUPLES INSIDE HEATERS
FFM SERIES 2 TEST 2 RUN 104 DONE ON 21072 1140

DESCRIPTION	TEMP DEG F	STD DEV	RISE AB INLET T	NORMALIZED TEMP
TC R0118AB HTR 1 INT	929.8	1.923	245.58	1.932
TC R0219AB HTR 2 INT	924.2	2.201	239.90	1.887
TC R0418AB HTR 4 INT	973.7	1.672	289.48	2.277
TC R0518AB HTR 5 INT	922.7	2.328	238.47	1.876
TC R1218AB HEATER 12	876.8	1.293	192.55	1.515
TC R1318DE HEATER 13	935.8	0.437	251.58	1.979
TC R1418AB HEATER 14	911.7	1.379	227.44	1.789
TC R1618AB HEATER 16	956.7	3.997	272.45	2.143
TC R1718AB HEATER 17	909.0	0.626	224.76	1.768
TC R1817AB HEATER 18	878.9	5.951	194.64	1.531
TC R1918CD HEATER 19	927.1	8.062	242.81	1.910
TC R0118BC HEATER 1	951.3	3.792	267.08	2.101
TC R0118CD HEATER 1	975.8	0.962	291.52	2.293
TC R0118DE HEATER 1	957.6	0.526	273.33	2.150
TC R0219BC HEATER 2	917.6	39.100	233.37	1.836
TC R0418BC HEATER 4	944.5	1.321	260.28	2.047
TC R0418CD HEATER 4	939.4	0.331	255.13	2.007
TC R0418DE HEATER 4	953.6	0.586	269.33	2.119
TC R0518BC HEATER 5	923.0	3.404	238.74	1.878
TC R0518CD HEATER 5	926.0	0.963	241.78	1.902
TC R0718BC HEATER 7	925.6	0.500	241.35	1.898
TC R0718CD HEATER 7	917.6	4.250	233.33	1.835
TC R0718DE HEATER 7	913.1	2.401	228.87	1.800
TC R0818BC HEATER 8	943.2	1.238	258.95	2.037
TC R1718BC HEATER 17	913.6	0.310	229.34	1.804
TC R1918BC HEATER 19	936.9	0.865	252.65	1.987
TC R1918DE HEATER 19	915.5	6.448	231.21	1.819

OPERATING DATA FOR FFM SERIES 2 TEST 2 RUN 104
WHICH WAS DONE ON 42472 1200

DESCRIPTION	MEAN VALUE	STANDARD DEVIATION
HEATER 1 POWER KW	14.17	0.017
HEATER 8,18,19 POWER	41.49	0.043
HTR 12,13,14 POWER	41.05	0.041
HTR 2,7,9,17 POWER	56.01	0.062
HTR 4,5,11,15 POWER	55.51	0.067
HTR 3,6,10,16 POWER	54.54	0.058
TOTAL POWER	260.52	0.323
TEST SECT FLOW, GPM	55.18	0.066
TEST SECT INLET PR	33.92	0.079
TEST SECT OUTLET PR	8.89	0.040
TOTAL FLOW, GPM	115.36	1.188
PUMP OUTLET PR, PSI	35.84	0.057
PUMP SPEED, RPM	1500.47	1.642
BLOWER SPEED, RPM	1125.67	0.900
AIR FLOW (200 F) CFM	19.48	0.303
TC 313 TEST SECT IN	705.22	0.481
TC 317 TEST SECT OUT	829.03	0.656
TC 300 PUMP OUTLET	1019.02	0.493
TC 318 RADIATOR IN	825.09	1.107
TC 334 RADIATOR OUT	691.61	0.549
TC 336 PUMP INLET	705.70	0.421
TC 332 RAD AIR IN	81.57	0.618
TC 331 RAD AIR OUT	172.55	0.412

HEAT BALANCE ON SODIUM FLOWING THROUGH BUNDLE
HEAT SUPPLIED BY DUMMY FUEL RODS = 897358.75 BTU/HR
HEAT ADDED TO SODIUM = 897736.69 BTU/HR
PERCENT HEAT BALANCE = 100.04

RESULTS FOR UNGROUNDED JUNCTION THERMOCOUPLES
FFM SERIES 2 TEST 2 RUN 104 DONE ON 42472 1200

DESCRIPTION	TEMP DEG F	STD DEV	RISE AB INLET T	NORMALIZED TEMP
TC 1504U CH 37	733.9	0.539	28.73	0.232
TC 1706U CH 21	764.3	0.556	59.03	0.477
TC 1807U CH 24	781.6	0.647	76.41	0.617
TC 1108U CH 31	764.4	0.552	59.19	0.478
TC 0409U CH 13	793.4	0.697	88.23	0.713
TC 0509U CH 3	791.4	0.497	86.21	0.697
TC 1009U CH 29	750.7	0.620	45.49	0.368
TC 1409U CH 17	779.0	0.564	73.77	0.596
TC 1609U CH 21	782.0	0.607	76.82	0.621
TC 1914U CH 24	780.5	0.513	75.30	0.608
TC 0815U CH 8	825.5	0.604	120.32	0.972
TC 1316U CH 35	814.1	0.581	108.84	0.879
TC 1516U CH 37	795.8	0.677	90.58	0.732
TC 0817U CH 9	840.5	0.685	135.27	1.093
TC 1217U CH 33	800.0	0.648	94.82	0.766
TC 1318U CH 34	794.1	0.565	88.89	0.718
TC 1718U CH 22	841.0	0.582	135.80	1.097
TC 1219U CH 32	804.7	0.578	99.49	0.804
TC 1819U CH 24	828.7	0.544	123.47	0.998
TC 1120U CH 31	814.3	0.548	109.04	0.881
TC 0421U CH 13	878.2	0.634	173.00	1.398
TC 0521U CH 3	880.3	0.618	175.05	1.414
TC 1021U CH 29	806.2	0.604	101.00	0.816
TC 1421U CH 17	857.4	0.617	152.23	1.230
TC 1621U CH 21	850.7	0.651	145.50	1.176

RESULTS FOR GROUNDED JUNCTION THERMOCOUPLES
FFM SERIES 2 TEST 2 RUN 104 DONE ON 42472 1200

DESCRIPTION	TEMP DEG F	STD DEV	RISE AB INLET T	NORMALIZED TEMP
TC 0118C CH 3	865.8	0.810	160.55	1.297
TC 0618D CH 4	856.4	0.653	151.16	1.221
TC 0618C CH 19	849.7	0.517	144.44	1.167
TC 0219A HEATER 2	865.9	0.651	160.68	1.298
TC 0219B CH 10	848.9	0.526	143.66	1.161
TC 0919A HTR 9 EXT	859.8	0.825	154.62	1.249
TC 0919B CH 29	836.3	0.701	131.04	1.059
TC 0718C CH 5	866.3	0.645	161.07	1.301
TC 0718D CH 6	856.0	1.219	150.74	1.218
TC 0319A HEATER 3	856.1	0.504	150.91	1.219
TC 0319B CH 12	838.5	0.556	133.30	1.077

RESULTS FOR DUCT WALL THERMOCOUPLES
FFM SERIES 2 TEST 2 RUN 104 DONE ON 42472 1200

DESCRIPTION	TEMP DEG F	STD DEV	RISE AB INLET T	NORMALIZED TEMP
TC D0B04 DUCT B	714.0	0.651	8.78	0.071
TC D0E04 DUCT E	710.7	0.567	5.51	0.045
TC D0F04 DUCT F	711.1	0.505	5.87	0.047
TC D0B08 DUCT B	717.6	0.623	12.41	0.100
TC D0D08 DUCT D	723.3	0.620	18.07	0.146
TC D0F08 DUCT F	729.0	0.536	23.77	0.192
TC D0B12 DUCT B	737.1	0.520	31.92	0.258
TC D0E12 DUCT E	741.6	0.598	36.41	0.294
TC D0F12 DUCT F	736.4	0.596	31.15	0.252
TC D0B16 DUCT B	771.1	0.596	65.84	0.532
TC D0D16 DUCT D	744.7	0.662	39.47	0.319
TC D0F16 DUCT F	756.2	0.575	50.99	0.412
TC D0D18 DUCT D	750.4	0.659	45.15	0.365
TC D0E18 DUCT E	761.3	0.574	56.04	0.453
TC DAB18 DUCT AB	765.8	0.616	60.53	0.489
TC DDE18 DUCT DE	746.8	0.570	41.53	0.336
TC DEF18 DUCT EF	762.5	0.517	57.24	0.463
TC D0F18 DUCT F	768.0	0.544	62.78	0.507
TC DFA18 DUCT FA	769.7	0.559	64.49	0.521
TC D0B21 DUCT B	770.2	0.589	65.00	0.525
TC D0D21 DUCT D	767.8	0.607	62.60	0.506
TC D0F21 DUCT F	792.4	0.618	87.17	0.704
TC D0B23 DUCT B	782.3	0.670	77.06	0.623
TC D0D23 DUCT D	779.4	0.693	74.19	0.599
TC D0F23 DUCT F	803.7	0.615	98.50	0.796

RESULTS FOR THERMOCOUPLES IN CHANNEL EXITS
FFM SERIES 2 TEST 2 RUN 104 DONE ON 42472 1200

DESCRIPTION	TEMP DEG F	STD DEV	RISE AB INLET T	NORMALIZED TEMP
TC EC03 EXIT CH 3	867.0	0.859	161.79	1.307
TC EC16 EXIT CH 16	850.5	0.582	145.31	1.174
TC EC17 EXIT CH 17	819.3	0.671	114.04	0.921
TC EC34 EXIT CH 34	808.6	0.476	103.38	0.835
TC EC35 EXIT CH 35	811.0	0.592	105.74	0.854
TC EC36 EXIT CH 36	816.2	0.588	110.98	0.897
TC EC06 EXIT CH 6	875.3	0.716	170.12	1.375
TC EC08 EXIT CH 8	847.9	0.741	142.70	1.153
TC EC27 EXIT CH 27	807.2	0.644	101.96	0.824
TC EA36 EXIT ANN EF	815.6	0.787	110.41	0.892
TC EA27 EXIT ANN BC	809.7	0.631	104.46	0.844
TC EA28 EXIT ANN C	811.2	0.753	105.94	0.856

RESULTS FOR THERMOCOUPLES INSIDE HEATERS
FFM SERIES 2 TEST 2 RUN 104 DONE ON 42472 1200

DESCRIPTION	TEMP DEG F	STD DEV	RISE AB INLET T	NORMALIZED TEMP
TC R0118AB HTR 1 INT	940.8	0.783	235.59	1.904
TC R0219AB HTR 2 INT	933.6	0.844	228.39	1.845
TC R0418AB HTR 4 INT	988.1	0.741	282.91	2.286
TC R0518AB HTR 5 INT	935.9	0.691	230.69	1.864
TC R1019AB HEATER 10	1007.4	55.422	302.16	2.442
TC R1218AB HEATER 12	891.2	0.675	185.96	1.503
TC R1318DE HEATER 13	950.2	0.690	244.99	1.980
TC R1418AB HEATER 14	929.7	0.649	224.50	1.814
TC R1518AB HEATER 15	934.1	0.723	228.86	1.849
TC R1618AB HEATER 16	976.5	0.718	271.28	2.192
TC R1718AB HEATER 17	924.2	0.627	218.94	1.769
TC R1817AB HEATER 18	890.1	0.640	184.92	1.494
TC R0118BC HEATER 1	958.8	0.862	253.63	2.049
TC R0118CD HEATER 1	979.9	0.846	274.65	2.219
TC R0118DE HEATER 1	965.7	0.759	260.47	2.105
TC R0219BC HEATER 2	934.0	0.756	228.74	1.848
TC R0418BC HEATER 4	956.5	0.678	251.30	2.031
TC R0418CD HEATER 4	947.0	0.790	241.79	1.954
TC R0418DE HEATER 4	957.9	0.760	252.69	2.042
TC R0518BC HEATER 5	936.3	0.842	231.03	1.867
TC R0518CD HEATER 5	939.3	0.814	234.03	1.891
TC R0718BC HEATER 7	938.8	0.741	233.60	1.888
TC R0718CD HEATER 7	937.2	0.727	232.01	1.875
TC R0718DE HEATER 7	931.8	0.816	226.54	1.831
TC R0818BC HEATER 8	959.4	0.762	254.22	2.054
TC R1019BC HEATER 10	797.4	64.504	92.22	0.745
TC R1718BC HEATER 17	927.5	0.776	222.32	1.796
TC R1918DE HEATER 19	935.8	0.630	230.63	1.864

OPERATING DATA FOR FFM SERIES 2 TEST 2 RUN 105
WHICH WAS DONE ON 22472 1109

DESCRIPTION	MEAN VALUE	STANDARD DEVIATION
HEATER 1 POWER KW	17.55	0.009
HEATER 8,18,19 POWER	51.19	0.022
HTR 12,13,14 POWER	50.92	0.018
HTR 2,7,9,17 POWER	69.57	0.0
HTR 4,5,11,15 POWER	68.46	0.018
HTR 3,6,10,16 POWER	67.53	0.052
TOTAL POWER	322.30	0.0
TEST SECT FLOW, GPM	55.88	0.031
TEST SECT INLET PR	33.91	0.076
TEST SECT OUTLET PR	8.82	0.039
TOTAL FLOW, GPM	116.08	1.099
PUMP OUTLET PR, PSI	35.08	0.030
PUMP SPEED, RPM	1524.60	0.894
BLOWER SPEED, RPM	1132.00	1.000
AIR FLOW (200 F) CFM	19.36	0.220
TC 313 TEST SECT IN	830.20	0.411
TC 317 TEST SECT OUT	985.32	0.146
TC 300 PUMP OUTLET	833.47	0.287
TC 318 RADIATOR IN	983.34	0.263
TC 334 RADIATOR OUT	823.62	2.763
TC 336 PUMP INLET	832.92	0.146
TC 332 RAD AIR IN	84.31	0.335
TC 331 RAD AIR OUT	198.52	0.219

HEAT BALANCE ON SODIUM FLOWING THROUGH BUNDLE
HEAT SUPPLIED BY DUMMY FUEL RODS = 1110625.00 BTU/HR
HEAT ADDED TO SODIUM = 1105827.00 BTU/HR
PERCENT HEAT BALANCE = 99.57

RESULTS FOR UNGROUNDED JUNCTION THERMOCOUPLES
FFM SERIES 2 TEST 2 RUN 105 DONE ON 22472 1109

DESCRIPTION	TEMP DEG F	STD DEV	RISE AB INLET T	NORMALIZED TEMP
TC 1504U CH 37	865.7	0.193	35.46	0.228
TC 1706U CH 21	904.5	0.273	74.28	0.477
TC 1807U CH 24	925.7	0.258	95.48	0.613
TC 1108U CH 31	904.9	0.287	74.73	0.480
TC 0409U CH 13	940.8	0.290	110.56	0.710
TC 0509U CH 3	937.3	0.199	107.09	0.687
TC 1009U CH 29	886.9	0.146	56.68	0.364
TC 1409U CH 17	922.6	0.207	92.36	0.593
TC 1609U CH 21	925.7	0.228	95.46	0.613
TC 1914U CH 24	924.8	0.228	94.56	0.607
TC 0815U CH 8	980.3	0.273	150.12	0.964
TC 1316U CH 35	966.4	0.263	136.20	0.874
TC 1516U CH 37	942.7	0.146	112.50	0.722
TC 0817U CH 9	996.3	0.305	166.11	1.066
TC 1217U CH 33	947.2	0.242	116.98	0.751
TC 1318U CH 34	941.5	0.145	111.35	0.715
TC 1718U CH 22	998.0	0.137	167.76	1.077
TC 1219U CH 32	952.7	0.435	122.51	0.786
TC 1819U CH 24	1615.5	0.369	785.28	5.041
TC 1120U CH 31	963.5	0.233	133.33	0.856
TC 0421U CH 13	1044.8	0.386	214.63	1.378
TC 0521U CH 3	1047.2	0.531	217.01	1.393
TC 1021U CH 29	955.4	0.457	125.19	0.804
TC 1421U CH 17	1020.5	0.403	190.35	1.222
TC 1621U CH 21	1005.3	0.386	175.09	1.124

RESULTS FOR GROUNDED JUNCTION THERMOCOUPLES
FFM SERIES 2 TEST 2 RUN 105 DONE ON 22472 1109

DESCRIPTION	TEMP DEG F	STD DEV	RISE AB INLET T	NORMALIZED TEMP
TC 0118C CH 3	1032.9	0.645	202.67	1.301
TC 0618D CH 4	1018.0	0.645	187.85	1.206
TC 0618C CH 19	1008.4	0.531	178.21	1.144
TC 0219A HEATER 2	1034.3	0.206	204.11	1.310
TC 0219B CH 10	1009.0	0.170	178.83	1.148
TC 0919A HTR 9 EXT	1022.6	0.645	192.43	1.235
TC 0919B CH 29	995.2	0.370	165.03	1.059
TC 0718C CH 5	1034.1	0.403	203.87	1.309
TC 0718D CH 6	1018.4	1.008	188.19	1.208
TC 0319A HEATER 3	1020.0	0.386	189.83	1.218
TC 0319B CH 12	996.4	0.209	166.19	1.067

RESULTS FOR DUCT WALL THERMOCOUPLES
FPM SERIES 2 TEST 2 RUN 105 DONE ON 22472 1109

DESCRIPTION	TEMP DEG F	STD DEV	RISE AB INLET T	NORMALIZED TEMP
TC D0B04 DUCT B	840.8	0.175	10.56	0.068
TC D0E04 DUCT E	837.0	0.203	6.82	0.044
TC D0F04 DUCT F	837.0	0.203	6.82	0.044
TC D0B08 DUCT B	845.7	0.228	15.50	0.099
TC D0D08 DUCT D	853.1	0.301	22.86	0.147
TC D0F08 DUCT F	860.2	0.199	30.01	0.193
TC D0B12 DUCT B	868.7	0.228	38.46	0.247
TC D0E12 DUCT E	874.7	0.273	44.50	0.286
TC D0F12 DUCT F	867.7	0.396	37.47	0.241
TC D0B16 DUCT B	912.6	0.146	82.42	0.529
TC D0D16 DUCT D	879.3	0.263	49.12	0.315
TC D0F16 DUCT F	892.0	0.496	61.83	0.397
TC D0D18 DUCT D	887.2	0.450	57.03	0.366
TC D0E18 DUCT E	899.3	0.199	69.07	0.443
TC DAB18 DUCT AB	908.3	0.435	78.15	0.502
TC D0E18 DUCT DE	882.3	0.258	52.12	0.335
TC DEF18 DUCT EF	894.2	0.310	63.96	0.411
TC D0F18 DUCT F	907.4	0.318	77.24	0.496
TC DFA18 DUCT FA	908.4	0.265	78.17	0.502
TC D0B21 DUCT B	905.2	0.514	75.02	0.482
TC D0D21 DUCT D	907.8	0.376	77.56	0.498
TC D0F21 DUCT F	938.0	0.381	107.84	0.692
TC D0B23 DUCT B	921.2	0.369	90.96	0.584
TC D0D23 DUCT D	922.8	0.384	92.55	0.594
TC D0F23 DUCT F	949.2	0.210	119.02	0.764

RESULTS FOR THERMOCOUPLES IN CHANNEL EXITS
FPM SERIES 2 TEST 2 RUN 105 DONE ON 22472 1109

DESCRIPTION	TEMP DEG F	STD DEV	RISE AB INLET T	NORMALIZED TEMP
TC EC03 EXIT CH 3	1024.5	0.531	194.35	1.247
TC EC16 EXIT CH 16	1010.1	0.810	179.93	1.155
TC EC17 EXIT CH 17	974.3	0.432	144.05	0.925
TC EC34 EXIT CH 34	960.0	0.487	129.85	0.833
TC EC35 EXIT CH 35	963.0	0.318	132.81	0.852
TC EC36 EXIT CH 36	966.5	0.637	136.33	0.875
TC EC06 EXIT CH 6	1031.3	0.403	201.05	1.290
TC EC08 EXIT CH 8	1000.5	0.052	170.28	1.093
TC EC27 EXIT CH 27	955.0	0.377	124.85	0.801
TC EA36 EXIT ANN EF	969.0	0.186	138.76	0.891
TC EA27 EXIT ANN BC	959.6	0.525	129.39	0.831
TC EA28 EXIT ANN C	959.2	0.502	128.98	0.828

RESULTS FOR THERMOCOUPLES INSIDE HEATERS
FFM SERIES 2 TEST 2 RUN 105 DONE ON 22472 1109

DESCRIPTION	TEMP DEG F	STD DEV	RISE AB INLET T	NORMALIZED TEMP
TC R0118AB HTR 1 INT	1120.2	0.687	290.02	1.862
TC R0219AB HTR 2 INT	1107.9	0.263	277.69	1.782
TC R0418AB HTR 4 INT	1181.1	2.567	350.87	2.252
TC R0518AB HTR 5 INT	1114.5	1.021	284.29	1.825
TC R1218AB HEATER 12	1048.9	4.831	218.71	1.404
TC R1318DE HEATER 13	1134.5	0.602	304.29	1.953
TC R1418AB HEATER 14	1108.8	2.333	278.65	1.789
TC R1618AB HEATER 16	1167.1	2.339	336.91	2.163
TC R1718AB HEATER 17	1099.5	0.776	269.35	1.729
TC R1817AB HEATER 18	1061.4	1.650	231.21	1.484
TC R1918CD HEATER 19	1280.8	342.098	450.64	2.893
TC R0118BC HEATER 1	1146.1	2.406	315.90	2.028
TC R0118CD HEATER 1	1179.0	0.412	348.80	2.239
TC R0118DE HEATER 1	1158.5	0.299	328.26	2.107
TC R0219BC HEATER 2	1095.1	24.404	264.94	1.701
TC R0418BC HEATER 4	1141.7	0.936	311.52	2.000
TC R0418CD HEATER 4	1133.8	0.395	303.56	1.948
TC R0418DE HEATER 4	1155.1	0.465	324.92	2.086
TC R0518BC HEATER 5	1113.6	1.493	283.38	1.819
TC R0518CD HEATER 5	1122.1	0.532	291.88	1.874
TC R0718BC HEATER 7	1116.8	0.640	286.62	1.840
TC R0718CD HEATER 7	1115.3	2.375	285.08	1.830
TC R0718DE HEATER 7	1108.6	1.417	278.44	1.787
TC R0818BC HEATER 8	1142.8	0.412	312.56	2.006
TC R1718BC HEATER 17	1104.3	0.171	274.08	1.759
TC R1918BC HEATER 19	933.8	423.300	103.61	0.665
TC R1918DE HEATER 19	1111.5	3.609	281.32	1.806

OPERATING DATA FOR FFM SERIES 2 TEST 2 RUN 105
WHICH WAS DONE ON 22472 1143

DESCRIPTION	MEAN VALUE	STANDARD DEVIATION
HEATER 1 POWER KW	17.65	0.018
HEATER 8,18,19 POWER	51.47	0.036
HTR 12,13,14 POWER	51.15	0.036
HTR 2,7,9,17 POWER	69.91	0.061
HTR 4,5,11,15 POWER	68.77	0.061
HTR 3,6,10,16 POWER	67.81	0.052
TOTAL POWER	323.58	0.349
TEST SECT FLOW, GPM	54.63	0.040
TEST SECT INLET PR	32.91	0.153
TEST SECT OUTLET PR	8.64	0.054
TOTAL FLOW, GPM	115.46	1.776
PUMP OUTLET PR, PSI	33.91	0.086
PUMP SPEED, RPM	1495.80	0.837
BLOWER SPEED, RPM	1131.40	0.548
AIR FLOW (200 F) CFM	19.12	0.323
TC 313 TEST SECT IN	836.18	0.089
TC 317 TEST SECT OUT	994.32	0.171
TC 300 PUMP OUTLET	838.48	0.089
TC 318 RADIATOR IN	993.32	0.052
TC 334 RADIATOR OUT	825.87	1.002
TC 336 PUMP INLET	837.26	0.089
TC 332 RAD AIR IN	85.02	0.320
TC 331 RAD AIR OUT	200.18	0.089

HEAT BALANCE ON SODIUM FLOWING THROUGH BUNDLE
HEAT SUPPLIED BY DUMMY FUEL RODS = 1115884.00 BTU/HR
HEAT ADDED TO SODIUM = 1100703.00 BTU/HR
PERCENT HEAT BALANCE = 98.64

0

RESULTS FOR UNGROUNDED JUNCTION THERMOCOUPLES
FFM SERIES 2 TEST 2 RUN 105 DONE ON 22472 1143

DESCRIPTION	TEMP DEG F	STD DEV	RISE AB INLET T	NORMALIZED TEMP
TC 1504U CH 37	872.0	0.248	35.86	0.224
TC 1706U CH 21	911.9	0.268	75.74	0.472
TC 1807U CH 24	933.3	0.354	97.16	0.606
TC 1108U CH 31	912.2	0.137	76.06	0.474
TC 0409U CH 13	949.7	0.388	113.49	0.708
TC 0509U CH 3	945.9	0.248	109.74	0.685
TC 1009U CH 29	893.8	0.287	57.64	0.360
TC 1409U CH 17	930.2	0.137	94.06	0.587
TC 1609U CH 21	933.6	0.137	97.38	0.607
TC 1914U CH 24	932.4	0.155	96.24	0.600
TC 0815U CH 8	989.7	0.089	153.56	0.958
TC 1316U CH 35	975.4	0.182	139.27	0.869
TC 1516U CH 37	950.9	0.268	114.68	0.715
TC 0817U CH 9	1006.3	0.089	170.16	1.061
TC 1217U CH 33	955.9	0.137	119.76	0.747
TC 1318U CH 34	949.6	0.089	113.42	0.707
TC 1718U CH 22	1007.2	0.329	171.06	1.067
TC 1219U CH 32	961.4	0.458	125.22	0.781
TC 1819U CH 24	829.8	1.549	-6.38	-0.040
TC 1120U CH 31	973.4	0.514	137.22	0.856
TC 0421U CH 13	1055.5	0.355	219.29	1.368
TC 0521U CH 3	1058.8	0.391	222.59	1.388
TC 1021U CH 29	964.3	0.465	128.16	0.799
TC 1421U CH 17	1030.3	0.454	194.13	1.211
TC 1621U CH 21	1014.9	0.244	178.73	1.115

RESULTS FOR GROUNDED JUNCTION THERMOCOUPLES
FFM SERIES 2 TEST 2 RUN 105 DONE ON 22472 1143

DESCRIPTION	TEMP DEG F	STD DEV	RISE AB INLET T	NORMALIZED TEMP
TC 0118C CH 3	1042.7	0.454	206.55	1.288
TC 0618D CH 4	1027.9	0.716	191.71	1.196
TC 0618C CH 19	1020.0	0.391	183.87	1.147
TC 0219A HEATER 2	1044.8	0.787	208.63	1.301
TC 0219B CH 10	1019.3	0.244	183.09	1.142
TC 0919A HTR 9 EXT	1033.3	0.983	197.17	1.230
TC 0919B CH 29	1006.4	0.787	170.19	1.062
TC 0718C CH 5	1043.2	0.244	207.01	1.291
TC 0718D CH 6	1028.7	0.716	192.49	1.201
TC 0319A HEATER 3	1030.5	0.454	194.29	1.212
TC 0319B CH 12	1006.8	0.678	170.63	1.064

RESULTS FOR DUCT WALL THERMOCOUPLES
FEM SERIES 2 TEST 2 RUN 105 DONE ON 22472 1143

DESCRIPTION	TEMP DEG F	STD DEV	RISE AB INLET T	NORMALIZED TEMP
TC D0B04 DUCT B	846.0	0.354	9.82	0.061
TC D0E04 DUCT E	843.5	0.186	7.36	0.046
TC D0F04 DUCT F	843.6	0.089	7.44	0.046
TC D0B08 DUCT B	851.9	0.308	15.74	0.098
TC D0D08 DUCT D	859.6	0.171	23.42	0.146
TC D0F08 DUCT F	867.6	0.089	31.42	0.196
TC D0B12 DUCT B	875.7	0.089	39.50	0.246
TC D0E12 DUCT E	883.0	0.182	46.79	0.292
TC D0F12 DUCT F	875.2	0.089	39.00	0.243
TC D0B16 DUCT B	921.7	0.248	85.50	0.533
TC D0D16 DUCT D	886.6	0.213	50.46	0.315
TC D0F16 DUCT F	900.6	0.171	64.42	0.402
TC D0D18 DUCT D	895.3	0.171	59.08	0.369
TC D0E18 DUCT E	907.8	0.089	71.60	0.447
TC DAB18 DUCT AB	917.3	0.614	81.13	0.506
TC DDE18 DUCT DE	890.9	0.213	54.68	0.341
TC DEF18 DUCT EF	905.6	0.137	69.38	0.433
TC D0F18 DUCT F	916.0	0.137	79.78	0.498
TC DFA18 DUCT FA	918.1	0.339	81.92	0.511
TC D0B21 DUCT B	913.3	0.307	77.17	0.481
TC D0D21 DUCT D	916.3	0.219	80.12	0.500
TC D0F21 DUCT F	946.9	0.550	110.69	0.690
TC D0B23 DUCT B	930.8	0.502	94.62	0.590
TC D0D23 DUCT D	932.0	0.633	95.84	0.598
TC D0F23 DUCT F	959.1	0.483	122.91	0.767

RESULTS FOR THERMOCOUPLES IN CHANNEL EXITS
FEM SERIES 2 TEST 2 RUN 105 DONE ON 22472 1143

DESCRIPTION	TEMP DEG F	STD DEV	RISE AB INLET T	NORMALIZED TEMP
TC EC03 EXIT CH 3	1035.9	0.244	199.77	1.246
TC EC16 EXIT CH 16	1020.0	0.355	183.81	1.147
TC EC17 EXIT CH 17	984.3	0.439	148.17	0.924
TC EC34 EXIT CH 34	968.4	0.382	132.27	0.825
TC EC35 EXIT CH 35	971.2	0.381	135.04	0.842
TC EC36 EXIT CH 36	976.1	0.480	139.91	0.873
TC EC06 EXIT CH 6	1040.7	0.454	204.49	1.276
TC EC08 EXIT CH 8	1009.9	0.449	173.70	1.083
TC EC27 EXIT CH 27	964.3	0.179	128.12	0.799
TC EA36 EXIT ANN EF	978.2	0.296	142.05	0.886
TC EA27 EXIT ANN BC	968.5	0.873	132.32	0.825
TC EA28 EXIT ANN C	969.2	0.523	133.05	0.830

RESULTS FOR THERMOCOUPLES INSIDE HEATERS
FFM SERIES 2 TEST 2 RUN 105 DONE ON 22472 1143

DESCRIPTION	TEMP DEG F	STD DEV	RISE AB INLET T	NORMALIZED TEMP
TC R0118AB HTR 1 INT	1129.6	2.555	293.42	1.830
TC R0219AB HTR 2 INT	1119.8	1.639	283.63	1.769
TC R0418AB HTR 4 INT	1189.8	4.842	353.57	2.205
TC R0518AB HTR 5 INT	1125.4	1.798	289.23	1.804
TC R1218AB HEATER 12	1064.2	2.644	227.99	1.422
TC R1318DE HEATER 13	1142.8	0.594	306.65	1.913
TC R1418AB HEATER 14	1114.8	3.240	278.65	1.738
TC R1618AB HEATER 16	1172.0	5.229	335.83	2.095
TC R1718AB HEATER 17	1108.7	0.270	272.49	1.700
TC R1817AB HEATER 18	1073.3	3.881	237.17	1.479
TC R1918CD HEATER 19	1127.0	528.736	290.81	1.814
TC R0118BC HEATER 1	1155.5	2.968	319.28	1.992
TC R0118CD HEATER 1	1189.7	0.771	353.48	2.205
TC R0118DE HEATER 1	1169.5	1.068	333.36	2.079
TC R0219BC HEATER 2	1091.8	37.194	255.62	1.594
TC R0418BC HEATER 4	1152.7	1.477	316.52	1.974
TC R0418CD HEATER 4	1144.1	0.524	307.94	1.921
TC R0418DE HEATER 4	1165.8	0.805	329.58	2.056
TC R0518BC HEATER 5	1122.0	4.604	285.78	1.783
TC R0518CD HEATER 5	1132.1	1.289	295.88	1.846
TC R0718BC HEATER 7	1127.2	0.367	291.00	1.815
TC R0718CD HEATER 7	1121.4	5.797	285.24	1.779
TC R0718DE HEATER 7	1117.2	1.763	280.98	1.753
TC R0818BC HEATER 8	1152.1	1.393	315.92	1.971
TC R1718BC HEATER 17	1114.1	0.771	277.88	1.733
TC R1918BC HEATER 19	1036.7	427.483	200.56	1.251
TC R1918DE HEATER 19	1120.2	2.477	284.04	1.772

OPERATING DATA FOR FFM SERIES 2 TEST 2 RUN 109
WHICH WAS DONE ON 12172 1013

DESCRIPTION	MEAN VALUE	STANDARD DEVIATION
HEATER 1 POWER KW	8.89	0.005
HEATER 8,18,19 POWER	26.35	0.018
HTR 12,13,14 POWER	25.73	0.011
HTR 2,7,9,17 POWER	35.02	0.030
HTR 4,5,11,15 POWER	35.20	0.018
HTR 3,6,10,16 POWER	34.16	0.026
TOTAL POWER	163.74	0.114
TEST SECT FLOW, GPM	54.72	0.079
TEST SECT INLET PR	33.28	0.085
TEST SECT OUTLET PR	8.97	0.041
TOTAL FLOW, GPM	108.08	0.476
PUMP OUTLET PR, PSI	34.35	0.064
PUMP SPEED, RPM	1483.40	0.548
BLOWER SPEED, RPM	744.66	0.522
AIR FLOW (200 F) CFM	7.74	0.235
TC 313 TEST SECT IN	600.25	0.656
TC 317 TEST SECT OUT	679.88	0.498
TC 300 PUMP OUTLET	600.33	0.451
TC 318 RADIATOR IN	679.23	0.457
TC 334 RADIATOR OUT	600.09	10.028
TC 336 PUMP INLET	600.45	0.451
TC 332 RAD AIR IN	88.85	0.230
TC 331 RAD AIR OUT	179.30	0.147

HEAT BALANCE ON SODIUM FLOWING THROUGH BUNDLE
HEAT SUPPLIED BY DUMMY FUEL RODS = 564670.06 BTU/HR
HEAT ADDED TO SODIUM = 588372.44 BTU/HR
PERCENT HEAT BALANCE = 104.20

RESULTS FOR UNGROUNDED JUNCTION THERMOCOUPLES
FFM SERIES 2 TEST 2 RUN 109 DONE ON 12172 1013

DESCRIPTION	TEMP DEG F	STD DEV	RISE AB INLET T	NORMALIZED TEMP
TC 1504U CH 37	617.9	0.451	17.66	0.231
TC 1706U CH 21	637.1	0.503	36.83	0.482
TC 1807U CH 24	649.9	0.670	49.68	0.650
TC 1108U CH 31	638.3	0.457	38.02	0.497
TC 0409U CH 13	656.2	0.512	55.94	0.732
TC 0509U CH 3	655.2	0.266	54.92	0.719
TC 1009U CH 29	630.2	0.410	29.91	0.391
TC 1409U CH 17	647.1	0.456	46.83	0.613
TC 1609U CH 21	648.5	0.512	48.22	0.631
TC 1914U CH 24	648.1	0.410	47.83	0.626
TC 0815U CH 8	676.8	0.451	76.58	1.002
TC 1316U CH 35	668.7	0.554	68.49	0.896
TC 1516U CH 37	657.9	0.656	57.70	0.755
TC 0817U CH 9	684.7	0.512	84.44	1.105
TC 1217U CH 33	661.1	0.266	60.86	0.796
TC 1318U CH 34	656.4	0.466	56.18	0.735
TC 1718U CH 22	685.2	0.456	84.91	1.111
TC 1219U CH 32	664.2	0.873	63.92	0.836
TC 1819U CH 24	678.6	0.899	78.40	1.026
TC 1120U CH 31	667.1	0.917	66.85	0.875
TC 0421U CH 13	710.8	1.147	110.56	1.447
TC 0521U CH 3	712.1	0.766	111.89	1.464
TC 1021U CH 29	664.6	1.114	64.32	0.842
TC 1421U CH 17	696.7	1.023	96.41	1.262
TC 1621U CH 21	693.2	0.888	92.97	1.217

RESULTS FOR GROUNDED JUNCTION THERMOCOUPLES
FFM SERIES 2 TEST 2 RUN 109 DONE ON 12172 1013

DESCRIPTION	TEMP DEG F	STD DEV	RISE AB INLET T	NORMALIZED TEMP
TC 0118C CH 3	702.6	1.146	102.31	1.339
TC 0618D CH 4	696.1	0.852	95.81	1.254
TC 0618C CH 19	689.9	0.965	89.68	1.173
TC 0219A HEATER 2	702.0	1.161	101.72	1.331
TC 0219B CH 10	692.1	1.212	91.85	1.202
TC 0919A HTR 9 EXT	697.0	1.284	96.80	1.267
TC 0919B CH 29	683.2	1.161	82.98	1.086
TC 0718C CH 5	704.5	1.090	104.22	1.364
TC 0718D CH 6	695.7	1.044	95.44	1.249
TC 0319A HEATER 3	697.6	1.271	97.40	1.275
TC 0319B CH 12	685.3	1.056	85.10	1.114

RESULTS FOR DUCT WALL THERMOCOUPLES
FFM SERIES 2 TEST 2 RUN 109 DONE ON 12172 1013

DESCRIPTION	TEMP DEG F	STD DEV	RISE AB INLET T	NORMALIZED TEMP
TC D0B04 DUCT B	606.4	0.537	6.15	0.080
TC D0E04 DUCT E	604.9	0.410	4.63	0.061
TC D0F04 DUCT F	604.7	0.266	4.42	0.058
TC D0B08 DUCT B	622.0	0.266	21.80	0.285
TC D0D08 DUCT D	612.3	0.690	12.02	0.157
TC D0F08 DUCT F	616.1	0.320	15.82	0.207
TC D0B12 DUCT B	608.6	0.618	8.39	0.110
TC D0E12 DUCT E	624.8	0.512	24.54	0.321
TC D0F12 DUCT F	621.0	0.649	20.75	0.272
TC D0B16 DUCT B	644.0	0.649	43.79	0.573
TC D0D16 DUCT D	627.1	0.494	26.82	0.351
TC D0F16 DUCT F	633.6	0.466	33.34	0.436
TC D0D18 DUCT D	631.4	0.333	31.12	0.407
TC D0E18 DUCT E	638.2	0.333	37.94	0.496
TC DAB18 DUCT AB	641.6	0.452	41.40	0.542
TC DDE18 DUCT DE	635.0	0.266	34.76	0.455
TC DEF18 DUCT EF	638.1	0.332	37.86	0.495
TC D0F18 DUCT F	641.3	0.498	41.05	0.537
TC DFA18 DUCT FA	641.6	0.618	41.33	0.541
TC D0B21 DUCT B	642.2	0.992	41.92	0.549
TC D0D21 DUCT D	642.0	1.011	41.80	0.547
TC D0F21 DUCT F	656.1	0.851	55.86	0.731
TC D0B23 DUCT B	650.3	0.988	50.04	0.655
TC D0D23 DUCT D	650.3	1.161	50.06	0.655
TC D0F23 DUCT F	662.9	0.988	62.64	0.820

RESULTS FOR THERMOCOUPLES IN CHANNEL EXITS
FFM SERIES 2 TEST 2 RUN 109 DONE ON 12172 1013

DESCRIPTION	TEMP DEG F	STD DEV	RISE AB INLET T	NORMALIZED TEMP
TC EC03 EXIT CH 3	699.7	0.801	99.45	1.301
TC EC16 EXIT CH 16	691.8	1.023	91.53	1.198
TC EC17 EXIT CH 17	673.2	0.913	72.97	0.955
TC EC34 EXIT CH 34	665.9	0.847	65.64	0.859
TC EC35 EXIT CH 35	668.1	0.821	67.85	0.888
TC EC36 EXIT CH 36	670.3	0.877	70.10	0.917
TC EC06 EXIT CH 6	699.5	1.066	99.30	1.299
TC EC08 EXIT CH 8	684.4	0.669	84.15	1.101
TC EC27 EXIT CH 27	665.0	0.258	64.77	0.848
TC EA36 EXIT ANN EF	670.4	0.749	70.19	0.918
TC EA27 EXIT ANN BC	667.6	0.514	67.38	0.882
TC EA28 EXIT ANN C	668.5	0.690	68.26	0.893

RESULTS FOR THERMOCOUPLES INSIDE HEATERS
FFM SERIES 2 TEST 2 RUN 109 DONE ON 12172 1013

DESCRIPTION	TEMP DEG F	STD DEV	RISE AB INLET T	NORMALIZED TEMP
TC R0118AB HTR 1 INT	750.3	1.441	150.08	1.964
TC R0219AB HTR 2 INT	747.8	0.585	147.54	1.931
TC R0418AB HTR 4 INT	778.8	0.907	178.54	2.336
TC R0518AB HTR 5 INT	745.5	2.301	145.24	1.901
TC R1218AB HEATER 12	717.3	1.106	117.06	1.532
TC R1318DE HEATER 13	754.1	0.931	153.87	2.013
TC R1418AB HEATER 14	738.0	1.391	137.78	1.803
TC R1618AB HEATER 16	765.2	2.487	164.96	2.159
TC R1718AB HEATER 17	740.5	1.090	140.22	1.835
TC R1817AB HEATER 18	718.8	1.567	118.54	1.551
TC R1918CD HEATER 19	741.1	1.580	140.82	1.843
TC R0118BC HEATER 1	766.8	1.502	166.52	2.179
TC R0118CD HEATER 1	778.6	0.727	178.38	2.334
TC R0118DE HEATER 1	765.9	1.225	165.63	2.167
TC R0219BC HEATER 2	805.6	17.762	205.34	2.687
TC R0418BC HEATER 4	762.5	0.716	162.25	2.123
TC R0418CD HEATER 4	757.0	0.757	156.77	2.051
TC R0418DE HEATER 4	763.7	0.932	163.42	2.138
TC R0518BC HEATER 5	740.5	3.124	140.26	1.835
TC R0518CD HEATER 5	750.3	0.758	150.03	1.963
TC R0718BC HEATER 7	748.1	0.856	147.87	1.935
TC R0718CD HEATER 7	741.7	2.608	141.46	1.851
TC R0718DE HEATER 7	747.2	1.568	146.98	1.923
TC R0818BC HEATER 8	758.6	0.746	158.32	2.072
TC R1718BC HEATER 17	741.6	0.892	141.36	1.850
TC R1918BC HEATER 19	754.1	1.364	153.81	2.013
TC R1918DE HEATER 19	748.1	0.764	147.84	1.935

OPERATING DATA FOR FFM SERIES 2 TEST 2 RUN 109
WHICH WAS DONE ON 30372 951

DESCRIPTION	MEAN VALUE	STANDARD DEVIATION
HEATER 1 POWER KW	8.93	0.004
HEATER 8,18,19 POWER	26.45	0.016
HTR 12,13,14 POWER	25.86	0.020
HTR 2,7,9,17 POWER	35.17	0.032
HTR 4,5,11,15 POWER	35.32	0.027
HTR 3,6,10,16 POWER	34.43	0.028
TOTAL POWER	164.63	0.151
TEST SECT FLOW, GPM	54.63	0.092
TEST SECT INLET PR	34.05	0.149
TEST SECT OUTLET PR	8.72	0.071
TOTAL FLOW, GPM	113.13	1.510
PUMP OUTLET PR, PSI	35.19	0.091
PUMP SPEED, RPM	1508.33	0.516
BLOWER SPEED, RPM	707.92	0.366
AIR FLOW (200 F) CFM	7.09	0.131
TC 313 TEST SECT IN	618.60	0.190
TC 317 TEST SECT OUT	696.01	0.326
TC 300 PUMP OUTLET	620.21	0.251
TC 318 RADIATOR IN	695.54	0.193
TC 334 RADIATOR OUT	610.20	0.168
TC 336 PUMP INLET	618.84	0.201
TC 332 RAD AIR IN	82.53	0.399
TC 331 RAD AIR OUT	177.38	0.071

HEAT BALANCE ON SODIUM FLOWING THROUGH BUNDLE
HEAT SUPPLIED BY DUMMY FUEL RODS = 567436.25 BTU/HR
HEAT ADDED TO SODIUM = 568256.13 BTU/HR
PERCENT HEAT BALANCE = 100.14

RESULTS FOR UNGROUNDED JUNCTION THERMOCOUPLES
FPM SERIES 2 TEST 2 RUN 109 DONE ON 30372 951

DESCRIPTION	TEMP DEG F	STD DEV	RISE AB INLET T	NORMALIZED TEMP
TC 1504U CH 37	635.9	0.208	17.31	0.224
TC 1706U CH 21	655.4	0.187	36.77	0.476
TC 1807U CH 24	666.8	0.168	48.16	0.623
TC 1108U CH 31	655.8	0.193	37.22	0.482
TC 0409U CH 13	673.5	0.317	54.92	0.710
TC 0509U CH 3	672.2	0.190	53.64	0.694
TC 1009U CH 29	646.8	0.086	28.20	0.365
TC 1409U CH 17	664.3	0.201	45.68	0.591
TC 1609U CH 21	666.9	0.347	48.28	0.625
TC 1914U CH 24	664.8	0.206	46.19	0.598
TC 0815U CH 8	693.5	0.175	74.90	0.969
TC 1316U CH 35	685.8	0.201	67.16	0.869
TC 1516U CH 37	674.7	0.143	56.13	0.726
TC 0817U CH 9	701.0	0.317	82.43	1.066
TC 1217U CH 33	677.0	0.168	58.42	0.756
TC 1318U CH 34	673.5	0.219	54.86	0.710
TC 1718U CH 22	703.3	0.117	84.72	1.096
TC 1219U CH 32	679.4	0.415	60.81	0.787
TC 1819U CH 24	694.9	0.571	76.28	0.987
TC 1120U CH 31	688.4	0.973	69.82	0.903
TC 0421U CH 13	726.9	0.517	108.34	1.402
TC 0521U CH 3	727.3	0.571	108.70	1.406
TC 1021U CH 29	682.2	0.398	63.62	0.823
TC 1421U CH 17	713.2	0.438	94.62	1.224
TC 1621U CH 21	709.3	0.310	90.72	1.174

RESULTS FOR GROUNDED JUNCTION THERMOCOUPLES
FPM SERIES 2 TEST 2 RUN 109 DONE ON 30372 951

DESCRIPTION	TEMP DEG F	STD DEV	RISE AB INLET T	NORMALIZED TEMP
TC 0118C CH 3	719.2	0.439	100.62	1.302
TC 0618D CH 4	711.2	0.648	92.63	1.198
TC 0618C CH 19	707.0	0.279	88.36	1.143
TC 0219A HEATER 2	717.0	0.842	98.36	1.272
TC 0219B CH 10	706.8	0.660	88.18	1.141
TC 0919A HTR 9 EXT	713.6	0.870	95.05	1.230
TC 0919B CH 29	699.4	0.558	80.78	1.045
TC 0718C CH 5	718.8	0.398	100.18	1.296
TC 0718D CH 6	711.7	0.914	93.10	1.204
TC 0319A HEATER 3	711.5	0.412	92.95	1.202
TC 0319B CH 12	700.9	0.561	82.27	1.064

RESULTS FOR DUCT WALL THERMOCOUPLES
FEM SERIES 2 TEST 2 RUN 109 DONE ON 30372 951

DESCRIPTION	TEMP DEG F	STD DEV	RISE AB INLET T	NORMALIZED TEMP
TC DOB04 DUCT B	624.1	0.237	5.54	0.072
TC DOE04 DUCT E	622.3	0.175	3.66	0.047
TC DOF04 DUCT F	622.8	0.201	4.22	0.055
TC DOB08 DUCT B	626.5	0.273	7.87	0.102
TC DOD08 DUCT D	629.8	0.175	11.24	0.145
TC DOF08 DUCT F	634.0	0.201	15.36	0.199
TC DOB12 DUCT B	636.5	0.168	17.90	0.232
TC DOE12 DUCT E	641.6	0.277	23.01	0.298
TC DOF12 DUCT F	638.3	0.279	19.68	0.255
TC DOB16 DUCT B	658.4	0.228	39.83	0.515
TC DOD16 DUCT D	643.7	0.190	25.06	0.324
TC DOF16 DUCT F	650.3	0.400	31.74	0.411
TC DOD18 DUCT D	647.0	0.311	28.42	0.368
TC DOE18 DUCT E	653.6	0.187	35.03	0.453
TC DAB18 DUCT AB	656.1	0.228	37.49	0.485
TC DDE18 DUCT DE	644.6	0.309	26.02	0.337
TC DEF18 DUCT EF	652.8	0.260	34.15	0.442
TC DOF18 DUCT F	658.0	0.370	39.36	0.509
TC DFA18 DUCT FA	659.8	0.317	41.19	0.533
TC DOB21 DUCT B	657.1	0.489	38.50	0.498
TC DOD21 DUCT D	657.1	0.602	38.49	0.498
TC DOF21 DUCT F	672.0	0.409	53.36	0.690
TC DOB23 DUCT B	663.1	0.694	44.46	0.575
TC DOD23 DUCT D	665.3	0.622	46.75	0.605
TC DOF23 DUCT F	678.9	0.410	60.32	0.780

RESULTS FOR THERMOCOUPLES IN CHANNEL EXITS
FEM SERIES 2 TEST 2 RUN 109 DONE ON 30372 951

DESCRIPTION	TEMP DEG F	STD DEV	RISE AB INLET T	NORMALIZED TEMP
TC EC03 EXIT CH 3	714.4	0.399	95.81	1.239
TC EC16 EXIT CH 16	706.1	0.335	87.46	1.131
TC EC17 EXIT CH 17	691.9	0.493	73.33	0.949
TC EC34 EXIT CH 34	684.2	0.390	65.59	0.849
TC EC35 EXIT CH 35	684.8	0.509	66.17	0.856
TC EC36 EXIT CH 36	686.3	0.305	67.66	0.875
TC EC06 EXIT CH 6	720.6	0.361	102.05	1.320
TC EC08 EXIT CH 8	701.7	0.260	83.13	1.075
TC EC27 EXIT CH 27	680.6	0.230	62.01	0.802
TC EA36 EXIT ANN EF	686.0	0.460	67.44	0.872
TC EA27 EXIT ANN BC	682.5	0.352	63.91	0.827
TC EA28 EXIT ANN C	682.1	0.185	63.55	0.822

RESULTS FOR THERMOCOUPLES INSIDE HEATERS
FFM SERIES 2 TEST 2 RUN 109 DONE ON 30372 S51

DESCRIPTION	TEMP DEG F	STD DEV	RISE AB INLET T	NORMALIZED TEMP
TC R0118AB HTR 1 INT	767.1	1.786	148.50	1.921
TC R0219AB HTR 2 INT	757.8	3.364	139.24	1.801
TC R0418AB HTR 4 INT	796.2	1.056	177.57	2.297
TC R0518AB HTR 5 INT	764.5	1.373	145.90	1.887
TC R1019AB HEATER 10	700.9	62.519	82.30	1.065
TC R1218AB HEATER 12	736.3	0.746	117.65	1.522
TC R1318DE HEATER 13	771.3	0.264	152.75	1.976
TC R1418AB HEATER 14	759.8	0.788	141.16	1.826
TC R1518AB HEATER 15	735.2	30.795	116.60	1.508
TC R1618AB HEATER 16	779.6	2.160	161.01	2.083
TC R1718AB HEATER 17	757.5	0.187	138.94	1.797
TC R1817AB HEATER 18	734.1	1.410	115.50	1.494
TC R0118BC HEATER 1	779.0	2.928	160.45	2.076
TC R0118CD HEATER 1	792.6	0.666	174.00	2.251
TC R0118DE HEATER 1	782.2	0.217	163.58	2.116
TC R0219BC HEATER 2	754.9	20.071	136.30	1.763
TC R0418BC HEATER 4	776.8	1.199	158.16	2.046
TC R0418CD HEATER 4	769.6	0.105	151.04	1.954
TC R0418DE HEATER 4	769.1	0.351	150.54	1.948
TC R0518BC HEATER 5	766.6	1.897	147.98	1.914
TC R0518CD HEATER 5	766.8	0.702	148.21	1.917
TC R0718BC HEATER 7	766.1	0.382	147.54	1.909
TC R0718CD HEATER 7	763.4	3.115	144.76	1.873
TC R0718DE HEATER 7	757.8	1.447	139.16	1.800
TC R0818BC HEATER 8	774.8	0.553	156.20	2.021
TC R1019BC HEATER 10	902.0	94.116	283.45	3.667
TC R1718BC HEATER 17	759.1	0.702	140.52	1.818
TC R1918DE HEATER 19	763.6	1.206	145.05	1.877

OPERATING DATA FOR FFM SERIES 2 TEST 2 RUN 109
WHICH WAS DONE ON 42672 918

DESCRIPTION	MEAN VALUE	STANDARD DEVIATION
HEATER 1 POWER KW	8.80	0.067
HEATER 8,18,19 POWER	25.93	0.184
HTR 12,13,14 POWER	25.42	0.173
HTR 2,7,9,17 POWER	34.64	0.269
HTR 4,5,11,15 POWER	34.69	0.241
HTR 3,6,10,16 POWER	33.78	0.231
TOTAL POWER	161.84	1.246
TEST SECT FLOW, GPM	54.40	0.081
TEST SECT INLET PR	33.73	0.046
TEST SECT OUTLET PR	8.89	0.060
TOTAL FLOW, GPM	114.04	1.292
PUMP OUTLET PR, PSI	36.05	0.036
PUMP SPEED, RPM	1486.60	1.517
BLOWER SPEED, RPM	666.60	0.381
AIR FLOW (200 F) CFM	6.18	0.078
TC 313 TEST SECT IN	624.42	1.234
TC 317 TEST SECT OUT	700.62	1.587
TC 300 PUMP OUTLET	623.68	1.187
TC 318 RADIATOR IN	699.98	1.566
TC 334 RADIATOR OUT	618.56	1.424
TC 336 PUMP INLET	624.94	1.182
TC 332 RAD AIR IN	81.53	0.182
TC 331 RAD AIR OUT	180.32	0.356

HEAT BALANCE ON SODIUM FLOWING THROUGH BUNDLE
HEAT SUPPLIED BY DUMMY FUEL RODS = 557532.75 BTU/HR
HEAT ADDED TO SODIUM = 556108.67 BTU/HR
PERCENT HEAT BALANCE = 99.74

RESULTS FOR UNGROUNDED JUNCTION THERMOCOUPLES
FRM SERIES 2 TEST 2 RUN 109 DONE ON 42672 918

DESCRIPTION	TEMP DEG F	STD DEV	RISE AB INLET T	NORMALIZED TEMP
TC 1504U CH 37	642.0	1.240	17.54	0.230
TC 1706U CH 21	660.7	1.477	36.26	0.475
TC 1807U CH 24	669.4	1.387	45.00	0.589
TC 1108U CH 31	660.7	1.185	36.26	0.475
TC 0409U CH 13	677.4	1.327	53.02	0.694
TC 0509U CH 3	677.8	1.529	53.42	0.699
TC 1009U CH 29	651.9	1.327	27.50	0.360
TC 1409U CH 17	669.5	1.329	45.10	0.590
TC 1609U CH 21	672.3	1.503	47.86	0.626
TC 1914U CH 24	669.5	1.461	45.04	0.590
TC 0815U CH 8	697.9	1.801	73.48	0.962
TC 1316U CH 35	690.4	1.619	65.96	0.863
TC 1516U CH 37	680.4	1.491	56.00	0.733
TC 0817U CH 9	706.9	1.545	82.46	1.079
TC 1217U CH 33	682.8	1.394	58.42	0.765
TC 1318U CH 34	678.3	1.477	53.86	0.705
TC 1718U CH 22	708.5	1.635	84.04	1.100
TC 1219U CH 32	685.3	1.399	60.90	0.797
TC 1819U CH 24	700.8	1.535	76.42	1.000
TC 1120U CH 31	691.9	1.295	67.52	0.884
TC 0421U CH 13	731.9	1.824	107.46	1.407
TC 0521U CH 3	731.8	1.874	107.40	1.406
TC 1021U CH 29	686.4	1.484	62.00	0.812
TC 1421U CH 17	716.8	1.653	92.42	1.210
TC 1621U CH 21	711.8	1.609	87.36	1.144

RESULTS FOR GROUNDED JUNCTION THERMOCOUPLES
FRM SERIES 2 TEST 2 RUN 109 DONE ON 42672 918

DESCRIPTION	TEMP DEG F	STD DEV	RISE AB INLET T	NORMALIZED TEMP
TC 0118C CH 3	723.8	1.903	99.42	1.301
TC 0618D CH 4	714.9	1.532	90.46	1.184
TC 0618C CH 19	711.9	1.578	87.48	1.145
TC 0219A HEATER 2	718.2	1.680	93.80	1.228
TC 0219B CH 10	711.0	1.724	86.62	1.134
TC 0919A HTR 9 EXT	717.9	1.982	93.52	1.224
TC 0919B CH 29	703.3	1.532	78.84	1.032
TC 0718C CH 5	721.5	1.772	97.12	1.271
TC 0718D CH 6	714.0	1.574	89.60	1.173
TC 0319A HEATER 3	715.8	1.785	91.42	1.197
TC 0319B CH 12	705.4	1.524	80.98	1.060

RESULTS FOR DUCT WALL THERMOCOUPLES
FFM SERIES 2 TEST 2 RUN 109 DONE ON 42672 918

DESCRIPTION	TEMP DEG F	STD DEV	RISE AB INLET T	NORMALIZED TEMP
TC DOB04 DUCT B	629.9	1.205	5.46	0.071
TC DOE04 DUCT E	627.6	1.126	3.22	0.042
TC DOF04 DUCT F	628.4	1.132	3.98	0.052
TC DOB08 DUCT B	632.0	1.272	7.56	0.099
TC DOD08 DUCT D	635.5	1.272	11.08	0.145
TC DOF08 DUCT F	639.0	1.158	14.54	0.190
TC DOB12 DUCT B	643.7	1.280	19.32	0.253
TC DOE12 DUCT E	646.9	1.331	22.48	0.294
TC DOF12 DUCT F	643.5	1.297	19.10	0.250
TC DOB16 DUCT B	664.5	1.350	40.06	0.524
TC DOD16 DUCT D	648.9	1.132	24.50	0.321
TC DOF16 DUCT F	655.6	1.503	31.14	0.408
TC DOD18 DUCT D	652.3	1.404	27.86	0.365
TC DOE18 DUCT E	658.4	1.316	33.98	0.445
TC DAB18 DUCT AB	661.7	1.382	37.28	0.488
TC DDE18 DUCT DE	649.2	1.124	24.76	0.324
TC DEF18 DUCT EF	658.4	1.307	33.98	0.445
TC DOF18 DUCT F	662.8	1.280	38.42	0.503
TC DFA18 DUCT FA	664.5	1.280	40.12	0.525
TC DOB21 DUCT B	664.5	1.110	40.08	0.525
TC DOD21 DUCT D	662.5	1.314	38.12	0.499
TC DOF21 DUCT F	676.9	1.355	52.44	0.686
TC DOB23 DUCT B	668.0	0.998	43.60	0.571
TC DOD23 DUCT D	670.3	1.363	45.84	0.600
TC DOF23 DUCT F	684.1	1.472	59.64	0.781

RESULTS FOR THERMOCOUPLES IN CHANNEL EXITS
FFM SERIES 2 TEST 2 RUN 109 DONE ON 42672 918

DESCRIPTION	TEMP DEG F	STD DEV	RISE AB INLET T	NORMALIZED TEMP
TC EC03 EXIT CH 3	720.0	1.758	95.62	1.252
TC EC16 EXIT CH 16	712.3	1.655	87.92	1.151
TC EC17 EXIT CH 17	690.4	1.521	66.00	0.864
TC EC34 EXIT CH 34	688.3	1.508	63.86	0.836
TC EC35 EXIT CH 35	688.9	1.361	64.52	0.845
TC EC36 EXIT CH 36	689.9	1.438	65.46	0.857
TC EC06 EXIT CH 6	726.6	1.720	102.14	1.337
TC EC08 EXIT CH 8	710.1	1.894	85.68	1.122
TC EC27 EXIT CH 27	685.3	1.517	60.90	0.797
TC EA36 EXIT ANN EF	689.9	1.496	65.50	0.857
TC EA27 EXIT ANN BC	687.7	1.602	63.24	0.828
TC EA28 EXIT ANN C	686.5	1.847	62.10	0.813

RESULTS FOR THERMOCOUPLES INSIDE HEATERS
FFM SERIES 2 TEST 2 RUN 109 DONE ON 42672 918

DESCRIPTION	TEMP DEG F	STD DEV	RISE AB INLET T	NORMALIZED TEMP
TC R0118AB HTR 1 INT	770.5	2.071	146.08	1.912
TC R0219AB HTR 2 INT	765.9	2.266	141.46	1.852
TC R0418AB HTR 4 INT	801.7	2.209	177.28	2.321
TC R0618AB HTR 5 INT	769.1	1.874	144.70	1.894
TC R1019AB HEATER 10	743.0	6.846	118.56	1.552
TC R1218AB HEATER 12	740.4	1.655	115.94	1.518
TC R1318DE HEATER 13	775.0	2.074	150.54	1.971
TC R1418AB HEATER 14	761.8	2.121	137.36	1.798
TC R1518AB HEATER 15	766.9	1.963	142.44	1.865
TC R1618AB HEATER 16	772.4	2.330	147.96	1.937
TC R1718AB HEATER 17	762.0	2.017	137.62	1.801
TC R1817AB HEATER 18	741.6	1.934	117.14	1.533
TC R0118BC HEATER 1	783.0	2.244	158.56	2.076
TC R0118CD HEATER 1	795.3	2.189	170.84	2.236
TC R0118DE HEATER 1	786.8	2.189	162.42	2.126
TC R0219BC HEATER 2	766.1	1.815	141.66	1.854
TC R0418BC HEATER 4	782.5	1.870	158.04	2.069
TC R0418CD HEATER 4	773.6	2.045	149.16	1.952
TC R0418DE HEATER 4	771.5	1.891	147.10	1.926
TC R0518BC HEATER 5	769.6	2.087	145.22	1.901
TC R0518CD HEATER 5	770.5	2.033	146.10	1.912
TC R0718BC HEATER 7	771.5	1.971	147.08	1.925
TC R0718CD HEATER 7	770.2	1.937	145.80	1.909
TC R0718DE HEATER 7	766.7	2.033	142.24	1.862
TC R0818BC HEATER 8	781.1	2.263	156.72	2.051
TC R1019BC HEATER 10	757.0	5.742	132.58	1.735
TC R1718BC HEATER 17	764.7	1.937	140.28	1.836
TC R1918DE HEATER 19	768.6	2.033	144.16	1.887

OPERATING DATA FOR FFM SERIES 2 TEST 2 RUN 109
WHICH WAS DONE ON 42672 939

DESCRIPTION	MEAN VALUE	STANDARD DEVIATION
HEATER 1 POWER KW	8.86	0.011
HEATER 8,18,19 POWER	26.05	0.022
HTR 12,13,14 POWER	25.55	0.023
HTR 2,7,9,17 POWER	34.86	0.026
HTR 4,5,11,15 POWER	34.84	0.039
HTR 3,6,10,16 POWER	33.98	0.038
TOTAL POWER	162.76	0.167
TEST SECT FLOW, GPM	54.46	0.057
TEST SECT INLET PR	33.84	0.116
TEST SECT OUTLET PR	8.86	0.086
TOTAL FLOW, GPM	113.64	1.155
PUMP OUTLET PR, PSI	36.01	0.094
PUMP SPEED, RPM	1486.00	2.121
BLOWER SPEED, RPM	667.38	0.630
AIR FLOW (200 F) CFM	6.17	0.151
TC 313 TEST SECT IN	628.84	0.517
TC 317 TEST SECT OUT	705.58	0.327
TC 300 PUMP OUTLET	627.98	0.378
TC 318 RADIATOR IN	704.96	0.351
TC 334 RADIATOR OUT	622.72	0.361
TC 336 PUMP INLET	629.08	0.492
TC 332 RAD AIR IN	81.52	0.243
TC 331 RAD AIR OUT	180.92	0.217

HEAT BALANCE ON SODIUM FLOWING THROUGH BUNDLE
HEAT SUPPLIED BY DUMMY FUEL RODS = 560537.88 BTU/HR
HEAT ADDED TO SODIUM = 559997.19 BTU/HR
PERCENT HEAT BALANCE = 99.90

RESULTS FOR UNGROUNDED JUNCTION THERMOCOUPLES
FEM SERIES 2 TEST 2 RUN 109 DONE ON 42672 939

DESCRIPTION	TEMP DEG F	STD DEV	RISE AB INLET T	NORMALIZED TEMP
TC 1504U CH 37	646.5	0.539	17.66	0.230
TC 1706U CH 21	665.4	0.404	36.56	0.476
TC 1807U CH 24	674.0	0.351	45.20	0.588
TC 1108U CH 31	665.2	0.152	36.36	0.473
TC 0409U CH 13	682.1	0.152	53.26	0.693
TC 0509U CH 3	682.4	0.377	53.54	0.697
TC 1009U CH 29	656.4	0.195	27.54	0.359
TC 1409U CH 17	674.3	0.217	45.44	0.592
TC 1609U CH 21	677.0	0.319	48.16	0.627
TC 1914U CH 24	674.2	0.464	45.32	0.590
TC 0815U CH 8	702.9	0.378	74.02	0.964
TC 1316U CH 35	695.4	0.351	66.60	0.867
TC 1516U CH 37	685.1	0.288	56.28	0.733
TC 0817U CH 9	711.9	0.288	83.10	1.082
TC 1217U CH 33	687.6	0.217	58.80	0.765
TC 1318U CH 34	683.1	0.327	54.24	0.706
TC 1718U CH 22	713.5	0.396	84.66	1.102
TC 1219U CH 32	690.4	0.259	61.54	0.801
TC 1819U CH 24	705.6	0.255	76.72	0.999
TC 1120U CH 31	696.7	0.241	67.90	0.884
TC 0421U CH 13	737.1	0.255	108.26	1.409
TC 0521U CH 3	737.0	0.148	108.18	1.408
TC 1021U CH 29	691.4	0.207	62.56	0.814
TC 1421U CH 17	721.9	0.249	93.06	1.211
TC 1621U CH 21	717.1	0.241	88.28	1.149

RESULTS FOR GROUNDED JUNCTION THERMOCOUPLES
FEM SERIES 2 TEST 2 RUN 109 DONE ON 42672 939

DESCRIPTION	TEMP DEG F	STD DEV	RISE AB INLET T	NORMALIZED TEMP
TC 0118C CH 3	728.8	0.421	99.96	1.301
TC 0618D CH 4	720.1	0.255	91.28	1.188
TC 0618C CH 19	717.0	0.278	88.18	1.148
TC 0219A HEATER 2	723.6	0.502	94.78	1.234
TC 0219B CH 10	716.3	0.439	87.42	1.138
TC 0919A HTR 9 EXT	723.4	0.249	94.52	1.231
TC 0919B CH 29	708.4	0.259	79.54	1.035
TC 0718C CH 5	726.8	0.339	98.00	1.276
TC 0718D CH 6	719.6	1.459	90.76	1.182
TC 0319A HEATER 3	721.2	0.255	92.38	1.203
TC 0319B CH 12	710.6	0.349	81.80	1.065

RESULTS FOR DUCT WALL THERMOCOUPLES
FEM SERIES 2 TEST 2 RUN 109 DONE ON 42672 939

DESCRIPTION	TEMP DEG F	STD DEV	RISE AB INLET T	NORMALIZED TEMP
TC DOB04 DUCT B	634.5	0.055	5.70	0.074
TC DOE04 DUCT E	632.0	0.270	3.20	0.042
TC DOF04 DUCT F	632.6	0.450	3.80	0.049
TC DOB08 DUCT B	636.6	0.319	7.72	0.101
TC DOD08 DUCT D	639.8	0.502	10.94	0.142
TC DOF08 DUCT F	643.4	0.361	14.52	0.189
TC DOB12 DUCT B	648.3	0.327	19.46	0.253
TC DOE12 DUCT E	651.5	0.453	22.68	0.295
TC DOF12 DUCT F	648.1	0.390	19.30	0.251
TC DOB16 DUCT B	669.3	0.329	40.44	0.526
TC DOD16 DUCT D	653.4	0.394	24.56	0.320
TC DOF16 DUCT F	660.4	0.480	31.52	0.410
TC DOD18 DUCT D	656.7	0.432	27.88	0.363
TC DOE18 DUCT E	662.9	0.270	34.02	0.443
TC DAB18 DUCT AB	666.3	0.404	37.50	0.488
TC DDE18 DUCT DE	653.7	0.490	24.90	0.324
TC DEF18 DUCT EF	663.3	0.453	34.42	0.448
TC DOF18 DUCT F	667.2	0.152	38.40	0.500
TC DFA18 DUCT FA	669.1	0.432	40.26	0.524
TC DOB21 DUCT B	669.1	0.300	40.22	0.524
TC DOD21 DUCT D	667.5	0.148	38.70	0.504
TC DOF21 DUCT F	681.7	0.241	52.84	0.688
TC DOB23 DUCT B	673.0	0.084	44.12	0.574
TC DOD23 DUCT D	675.0	0.526	46.16	0.601
TC DOF23 DUCT F	689.0	0.300	60.14	0.783

RESULTS FOR THERMOCOUPLES IN CHANNEL EXITS
FEM SERIES 2 TEST 2 RUN 109 DONE ON 42672 939

DESCRIPTION	TEMP DEG F	STD DEV	RISE AB INLET T	NORMALIZED TEMP
TC EC03 EXIT CH 3	725.4	0.427	96.60	1.258
TC EC16 EXIT CH 16	717.5	0.122	88.70	1.155
TC EC17 EXIT CH 17	695.5	0.152	66.66	0.868
TC EC34 EXIT CH 34	693.3	0.279	64.42	0.839
TC EC35 EXIT CH 35	693.7	0.152	64.82	0.844
TC EC36 EXIT CH 36	695.1	0.342	66.22	0.862
TC EC06 EXIT CH 6	731.9	0.300	103.10	1.342
TC EC08 EXIT CH 8	715.1	0.396	86.30	1.123
TC EC27 EXIT CH 27	690.1	0.694	61.28	0.798
TC EA36 EXIT ANN EF	694.9	0.598	66.02	0.859
TC EA27 EXIT ANN BC	692.7	0.518	63.86	0.831
TC EA28 EXIT ANN C	691.4	0.557	62.60	0.815

RESULTS FOR THERMOCOUPLES INSIDE HEATERS
FFM SERIES 2 TEST 2 RUN 109 DONE ON 42672 939

DESCRIPTION	TEMP DEG F	STD DEV	RISE AB INLET T	NORMALIZED TEMP
TC R0118AB HTR 1 INT	775.8	0.455	146.92	1.913
TC R0219AB HTR 2 INT	771.3	0.339	142.48	1.855
TC R0418AB HTR 4 INT	807.2	0.300	178.40	2.322
TC R0518AB HTR 5 INT	774.2	0.370	145.38	1.893
TC R1019AB HEATER 10	769.3	10.847	140.48	1.829
TC R1218AB HEATER 12	745.6	0.164	116.80	1.521
TC R1318DE HEATER 13	780.3	0.259	151.46	1.972
TC R1418AB HEATER 14	767.3	0.192	138.48	1.803
TC R1518AB HEATER 15	772.2	0.255	143.38	1.867
TC R1618AB HEATER 16	778.5	0.421	149.66	1.948
TC R1718AB HEATER 17	767.6	0.377	138.76	1.806
TC R1817AB HEATER 18	746.4	0.148	117.60	1.531
TC R0118BC HEATER 1	788.6	0.623	159.78	2.080
TC R0118CD HEATER 1	800.9	0.612	172.06	2.240
TC R0118DE HEATER 1	792.4	0.515	163.54	2.129
TC R0219BC HEATER 2	771.6	0.602	142.78	1.859
TC R0418BC HEATER 4	787.6	0.527	158.74	2.067
TC R0418CD HEATER 4	778.9	0.527	150.06	1.954
TC R0418DE HEATER 4	776.7	0.515	147.90	1.925
TC R0518BC HEATER 5	774.8	0.370	145.94	1.900
TC R0518CD HEATER 5	775.6	0.319	146.80	1.911
TC R0718BC HEATER 7	777.0	0.536	148.14	1.929
TC R0718CD HEATER 7	775.6	0.635	146.78	1.911
TC R0718DE HEATER 7	771.9	0.396	143.04	1.862
TC R0818BC HEATER 8	786.8	0.439	157.96	2.056
TC R1019BC HEATER 10	760.5	7.630	131.62	1.713
TC R1718BC HEATER 17	769.9	0.536	141.10	1.837
TC R1918DE HEATER 19	773.7	0.773	144.82	1.885

OPERATING DATA FOR FFM SERIES 2 TEST 2 RUN 110
WHICH WAS DONE ON 12172 1338

DESCRIPTION	MEAN VALUE	STANDARD DEVIATION
HEATER 1 POWER KW	8.71	0.004
HEATER 8,18,19 POWER	25.75	0.011
HTR 12,13,14 POWER	25.13	0.011
HTR 2,7,9,17 POWER	34.26	0.0
HTR 4,5,11,15 POWER	34.38	0.004
HTR 3,6,10,16 POWER	33.40	0.020
TOTAL POWER	160.02	0.045
TEST SECT FLOW, GPM	43.62	0.106
TEST SECT INLET PR	25.06	0.107
TEST SECT OUTLET PR	8.05	0.046
TOTAL FLOW, GPM	87.06	1.473
PUMP OUTLET PR, PSI	25.11	0.061
PUMP SPEED, RPM	1210.00	0.0
BLOWER SPEED, RPM	724.00	0.374
AIR FLOW (200 F) CFM	7.34	0.179
TC 313 TEST SECT IN	600.85	0.206
TC 317 TEST SECT OUT	698.01	0.340
TC 300 PUMP OUTLET	597.77	0.994
TC 318 RADIATOR IN	697.20	0.187
TC 334 RADIATOR OUT	590.96	0.337
TC 336 PUMP INLET	599.15	0.189
TC 332 RAD AIR IN	93.11	0.353
TC 331 RAD AIR OUT	185.53	0.290

HEAT BALANCE ON SODIUM FLOWING THROUGH BUNDLE
HEAT SUPPLIED BY DUMMY FUEL RODS = 551966.25 BTU/HR
HEAT ADDED TO SODIUM = 572132.19 BTU/HR
PERCENT HEAT BALANCE = 103.65

RESULTS FOR UNGROUNDED JUNCTION THERMOCOUPLES
FPM SERIES 2 TEST 2 RUN 110 DONE ON 12172 1338

DESCRIPTION	TEMP DEG F	STD DEV	RISE AB INLET T	NORMALIZED TEMP
TC 1504U CH 37	620.3	0.189	19.50	0.208
TC 1706U CH 21	643.0	0.189	42.20	0.450
TC 1807U CH 24	658.2	0.352	57.38	0.612
TC 1108U CH 31	644.2	0.187	43.39	0.463
TC 0409U CH 13	667.8	0.225	67.00	0.715
TC 0509U CH 3	666.7	0.456	65.85	0.703
TC 1009U CH 29	636.7	0.206	35.84	0.382
TC 1409U CH 17	656.1	0.319	55.23	0.589
TC 1609U CH 21	656.7	0.231	55.89	0.596
TC 1914U CH 24	656.9	0.312	56.10	0.598
TC 0815U CH 8	693.1	0.333	92.22	0.984
TC 1316U CH 35	682.8	0.342	81.92	0.874
TC 1516U CH 37	669.3	0.332	68.50	0.731
TC 0817U CH 9	703.3	0.396	102.44	1.093
TC 1217U CH 33	673.1	0.379	72.30	0.771
TC 1318U CH 34	669.1	0.231	68.25	0.728
TC 1718U CH 22	704.2	0.405	103.38	1.103
TC 1219U CH 32	677.3	1.229	76.46	0.816
TC 1819U CH 24	693.9	1.244	93.07	0.993
TC 1120U CH 31	678.8	0.220	77.95	0.832
TC 0421U CH 13	733.7	1.008	132.82	1.417
TC 0521U CH 3	737.6	1.398	136.76	1.459
TC 1021U CH 29	679.0	1.244	78.15	0.834
TC 1421U CH 17	715.8	1.100	114.94	1.226
TC 1621U CH 21	709.3	1.247	108.40	1.156

RESULTS FOR GROUNDED JUNCTION THERMOCOUPLES
FPM SERIES 2 TEST 2 RUN 110 DONE ON 12172 1338

DESCRIPTION	TEMP DEG F	STD DEV	RISE AB INLET T	NORMALIZED TEMP
TC 0118C CH 3	724.1	1.225	123.21	1.314
TC 0618D CH 4	716.4	1.164	115.51	1.232
TC 0618C CH 19	711.1	1.611	110.28	1.177
TC 0219A HEATER 2	725.7	1.543	124.86	1.332
TC 0219B CH 10	713.1	1.611	112.22	1.197
TC 0919A HTR 9 EXT	717.7	1.389	116.86	1.247
TC 0919B CH 29	701.1	1.611	100.22	1.069
TC 0718C CH 5	726.5	1.247	125.62	1.340
TC 0718D CH 6	717.0	1.225	116.17	1.239
TC 0319A HEATER 3	717.2	1.566	116.37	1.241
TC 0319B CH 12	704.7	1.410	103.87	1.108

RESULTS FOR DUCT WALL THERMOCOUPLES
FFM SERIES 2 TEST 2 RUN 110 DONE ON 12172 1338

DESCRIPTION	TEMP DEG F	STD DEV	RISE AB INLET T	NORMALIZED TEMP
TC DOB04 DUCT B	608.2	0.411	7.38	0.079
TC DOE04 DUCT E	606.6	0.319	5.73	0.061
TC DOF04 DUCT F	606.6	0.187	5.79	0.062
TC DOB08 DUCT B	628.2	0.225	27.36	0.292
TC DOD08 DUCT D	616.5	0.352	15.68	0.167
TC DOF08 DUCT F	620.6	0.187	19.75	0.211
TC DOB12 DUCT B	612.1	0.131	11.26	0.120
TC DOE12 DUCT E	631.6	0.352	30.80	0.329
TC DOF12 DUCT F	627.6	0.434	26.75	0.285
TC DOB16 DUCT B	654.6	0.352	53.72	0.573
TC DOD16 DUCT D	635.2	0.205	34.32	0.366
TC DOF16 DUCT F	642.5	0.131	41.64	0.444
TC DOD18 DUCT D	640.0	0.131	39.16	0.418
TC DOE18 DUCT E	648.8	0.189	47.98	0.512
TC DAB18 DUCT AB	653.4	0.337	52.57	0.561
TC DDE18 DUCT DE	645.9	0.342	45.02	0.480
TC DEF18 DUCT EF	648.2	0.205	47.32	0.505
TC DOF18 DUCT F	652.6	0.349	51.75	0.552
TC DFA18 DUCT FA	653.8	0.210	53.00	0.565
TC DOB21 DUCT B	654.2	1.099	53.38	0.569
TC DOD21 DUCT D	652.1	1.327	51.27	0.547
TC DOF21 DUCT F	672.1	1.479	71.29	0.761
TC DOB23 DUCT B	663.3	1.464	62.40	0.666
TC DOD23 DUCT D	663.1	1.646	62.30	0.665
TC DOF23 DUCT F	677.4	1.327	76.57	0.817

RESULTS FOR THERMOCOUPLES IN CHANNEL EXITS
FFM SERIES 2 TEST 2 RUN 110 DONE ON 12172 1338

DESCRIPTION	TEMP DEG F	STD DEV	RISE AB INLET T	NORMALIZED TEMP
TC EC03 EXIT CH 3	721.1	1.373	120.22	1.283
TC EC16 EXIT CH 16	711.3	1.244	110.43	1.178
TC EC17 EXIT CH 17	684.5	1.272	83.64	0.892
TC EC34 EXIT CH 34	681.2	1.190	80.34	0.857
TC EC35 EXIT CH 35	682.1	1.602	81.25	0.867
TC EC36 EXIT CH 36	685.6	1.247	84.74	0.904
TC EC06 EXIT CH 6	721.8	1.305	120.97	1.291
TC EC08 EXIT CH 8	699.3	0.557	98.48	1.051
TC EC27 EXIT CH 27	679.3	0.149	78.50	0.837
TC EA36 EXIT ANN EF	685.9	0.776	85.02	0.907
TC EA27 EXIT ANN BC	680.8	0.618	79.98	0.853
TC EA28 EXIT ANN C	681.1	0.660	80.26	0.856

RESULTS FOR THERMOCOUPLES INSIDE HEATERS
FFM SERIES 2 TEST 2 RUN 110 DONE ON 12172 1338

DESCRIPTION	TEMP DEG F	STD DEV	RISE AB INLET T	NORMALIZED TEMP
TC R0118AB HTR 1 INT	765.7	1.377	164.84	1.759
TC R0219AB HTR 2 INT	768.6	1.393	167.71	1.789
TC R0418AB HTR 4 INT	797.0	1.573	196.20	2.093
TC R0518AB HTR 5 INT	771.4	2.715	170.57	1.820
TC R1218AB HEATER 12	731.7	1.894	130.89	1.396
TC R1318DE HEATER 13	766.7	1.566	165.87	1.770
TC R1418AB HEATER 14	752.4	2.248	151.58	1.617
TC R1618AB HEATER 16	782.6	3.717	181.79	1.939
TC R1718AB HEATER 17	755.2	1.120	154.35	1.647
TC R1817AB HEATER 18	724.6	1.112	123.80	1.321
TC R1918CD HEATER 19	757.5	4.029	156.68	1.672
TC R0118BC HEATER 1	777.6	1.789	176.75	1.886
TC R0118CD HEATER 1	797.7	0.745	196.82	2.100
TC R0118DE HEATER 1	788.6	1.222	187.73	2.003
TC R0219BC HEATER 2	711.8	19.635	110.90	1.183
TC R0418BC HEATER 4	780.0	1.153	179.15	1.911
TC R0418CD HEATER 4	776.8	0.736	175.94	1.877
TC R0418DE HEATER 4	783.7	1.299	182.85	1.951
TC R0518BC HEATER 5	771.1	2.344	170.26	1.816
TC R0518CD HEATER 5	771.8	1.520	170.90	1.823
TC R0718BC HEATER 7	766.3	0.376	165.47	1.765
TC R0718CD HEATER 7	772.4	4.295	171.60	1.831
TC R0718DE HEATER 7	763.1	1.695	162.21	1.731
TC R0818BC HEATER 8	775.1	1.476	174.22	1.859
TC R1718BC HEATER 17	758.0	0.670	157.16	1.677
TC R1918BC HEATER 19	771.5	0.149	170.64	1.820
TC R1918DE HEATER 19	775.3	6.054	174.47	1.861

OPERATING DATA FOR FFM SERIES 2 TEST 2 RUN 111
WHICH WAS DONE ON 12172 1447

DESCRIPTION	MEAN VALUE	STANDARD DEVIATION
HEATER 1 POWER KW	8.76	0.0
HEATER 8,18,19 POWER	25.95	0.012
HTR 12,13,14 POWER	25.29	0.012
HTR 2,7,9,17 POWER	34.49	0.023
HTR 4,5,11,15 POWER	34.62	0.012
HTR 3,6,10,16 POWER	33.63	0.012
TOTAL POWER	161.13	0.115
TEST SECT FLOW, GPM	33.01	0.049
TEST SECT INLET PR	18.39	0.040
TEST SECT OUTLET PR	7.33	0.017
TOTAL FLOW, GPM	65.41	1.645
PUMP OUTLET PR, PSI	17.84	0.029
PUMP SPEED, RPM	931.70	0.0
BLOWER SPEED, RPM	710.17	0.404
AIR FLOW (200 F) CFM	7.06	0.029
TC 313 TEST SECT IN	602.62	0.778
TC 317 TEST SECT OUT	732.28	0.778
TC 300 PUMP OUTLET	602.18	1.061
TC 318 RADIATOR IN	730.70	0.707
TC 334 RADIATOR OUT	593.12	0.495
TC 336 PUMP INLET	601.22	0.778
TC 332 RAD AIR IN	95.18	0.141
TC 331 RAD AIR OUT	190.90	0.141

HEAT BALANCE ON SODIUM FLOWING THROUGH BUNDLE
HEAT SUPPLIED BY DUMMY FUEL RODS = 555756.94 BTU/HR
HEAT ADDED TO SODIUM = 577557.88 BTU/HR
PERCENT HEAT BALANCE = 103.92

RESULTS FOR UNGROUNDED JUNCTION THERMOCOUPLES
FFM SERIES 2 TEST 2 RUN 111 DONE ON 12172 1447

DESCRIPTION	TEMP DEG F	STD DEV	RISE AB INLET T	NORMALIZED TEMP
TC 1504U CH 37	626.4	1.061	23.80	0.191
TC 1706U CH 21	655.8	0.495	53.20	0.426
TC 1807U CH 24	674.5	1.061	71.84	0.576
TC 1108U CH 31	656.1	0.778	53.50	0.429
TC 0409U CH 13	689.3	0.424	86.66	0.695
TC 0509U CH 3	686.8	0.778	84.18	0.675
TC 1009U CH 29	646.0	0.778	43.36	0.348
TC 1409U CH 17	672.8	0.778	70.20	0.563
TC 1609U CH 21	671.4	0.424	68.82	0.552
TC 1914U CH 24	673.8	0.778	71.20	0.571
TC 0815U CH 8	722.1	0.495	119.50	0.958
TC 1316U CH 35	708.9	0.495	106.30	0.852
TC 1516U CH 37	639.5	0.778	86.90	0.697
TC 0817U CH 9	736.2	0.495	133.60	1.071
TC 1217U CH 33	696.8	0.495	94.22	0.755
TC 1318U CH 34	692.1	0.778	89.52	0.718
TC 1718U CH 22	738.2	0.778	135.62	1.087
TC 1219U CH 32	702.1	0.778	99.50	0.797
TC 1819U CH 24	724.1	0.495	121.44	0.973
TC 1120U CH 31	710.7	2.263	108.04	0.866
TC 0421U CH 13	777.3	0.778	174.66	1.400
TC 0521U CH 3	782.4	0.707	179.80	1.441
TC 1021U CH 29	705.5	1.061	102.88	0.825
TC 1421U CH 17	751.6	0.778	149.02	1.194
TC 1621U CH 21	740.1	1.060	137.44	1.102

RESULTS FOR GROUNDED JUNCTION THERMOCOUPLES
FFM SERIES 2 TEST 2 RUN 111 DONE ON 12172 1447

DESCRIPTION	TEMP DEG F	STD DEV	RISE AB INLET T	NORMALIZED TEMP
TC 0118C CH 3	764.1	0.778	161.50	1.294
TC 0618D CH 4	758.2	1.414	155.54	1.247
TC 0618C CH 19	749.1	0.424	146.44	1.174
TC 0219A HEATER 2	765.1	0.778	162.44	1.302
TC 0219B CH 10	750.0	0.424	147.34	1.181
TC 0919A HTR 9 EXT	750.9	0.778	148.24	1.188
TC 0919B CH 29	730.4	0.141	127.74	1.024
TC 0718C CH 5	766.8	1.061	164.16	1.316
TC 0718D CH 6	758.1	1.061	155.52	1.246
TC 0319A HEATER 3	755.3	0.424	152.68	1.224
TC 0319B CH 12	739.0	0.778	136.42	1.093

RESULTS FOR DUCT WALL THERMCCOUPLES
FFM SERIES 2 TEST 2 RUN 111 DONE ON 12172 1447

DESCRIPTION	TEMP DEG F	STD DEV	RISE AB INLET T	NORMALIZED TEMP
TC DOB04 DUCT B	612.0	0.778	9.36	0.075
TC DOE04 DUCT E	610.5	0.778	7.90	0.063
TC DOF04 DUCT F	610.4	0.778	7.80	0.063
TC DOB08 DUCT B	641.6	0.778	38.98	0.312
TC DOD08 DUCT D	623.8	0.778	21.22	0.170
TC DOF08 DUCT F	628.8	0.778	26.22	0.210
TC DOB12 DUCT B	618.7	0.778	16.08	0.129
TC DOE12 DUCT E	643.6	0.778	41.00	0.329
TC DOF12 DUCT F	639.2	0.424	36.62	0.294
TC DOB16 DUCT B	675.3	0.778	72.72	0.583
TC DOD16 DUCT D	650.0	0.778	47.40	0.380
TC DOF16 DUCT F	660.7	0.778	58.12	0.456
TC DOD18 DUCT D	658.3	0.495	55.64	0.446
TC DOE18 DUCT E	670.6	0.424	68.02	0.545
TC DAB18 DUCT AB	674.9	0.424	72.32	0.580
TC DDE18 DUCT DE	666.3	0.495	63.70	0.511
TC DEF18 DUCT EF	667.4	0.778	64.76	0.519
TC DOF18 DUCT F	675.0	0.495	72.42	0.580
TC DFA18 DUCT FA	675.3	0.424	72.64	0.582
TC DOB21 DUCT B	675.5	0.778	72.84	0.584
TC DOD21 DUCT D	674.5	0.495	71.84	0.576
TC DOF21 DUCT F	700.0	0.424	97.36	0.780
TC DOB23 DUCT B	686.8	0.778	84.14	0.674
TC DOD23 DUCT D	689.4	0.778	86.78	0.696
TC DOF23 DUCT F	706.0	0.141	103.42	0.829

RESULTS FOR THERMOCOUPLES IN CHANNEL EXITS
FFM SERIES 2 TEST 2 RUN 111 DONE ON 12172 1447

DESCRIPTION	TEMP DEG F	STD DEV	RISE AB INLET T	NORMALIZED TEMP
TC EC03 EXIT CH 3	760.4	0.495	157.74	1.264
TC EC16 EXIT CH 16	745.6	1.060	142.94	1.146
TC EC17 EXIT CH 17	723.3	1.060	120.64	0.967
TC EC34 EXIT CH 34	711.0	0.778	108.40	0.869
TC EC35 EXIT CH 35	711.6	0.707	108.96	0.873
TC EC36 EXIT CH 36	715.0	1.131	112.34	0.900
TC EC06 EXIT CH 6	764.9	0.778	162.28	1.301
TC EC08 EXIT CH 8	728.7	2.051	126.08	1.011
TC EC27 EXIT CH 27	703.7	1.131	101.08	0.810
TC EA36 EXIT ANN EF	715.4	1.485	112.82	0.904
TC EA27 EXIT ANN BC	707.8	1.485	105.20	0.843
TC EA28 EXIT ANN C	708.2	1.485	105.56	0.846

RESULTS FOR THERMOCOUPLES INSIDE HEATERS
FFM SERIES 2 TEST 2 RUN 111 DONE ON 12172 1447

DESCRIPTION	TEMP DEG F	STD DEV	RISE AB INLET T	NORMALIZED TEMP
TC R0118AB HTR 1 INT	813.6	2.263	210.98	1.691
TC R0219AB HTR 2 INT	804.6	1.343	201.94	1.619
TC R0418AB HTR 4 INT	839.6	0.495	236.96	1.899
TC R0518AB HTR 5 INT	800.2	1.061	197.60	1.584
TC R1218AB HEATER 12	752.3	0.142	149.72	1.200
TC R1318DE HEATER 13	791.3	0.778	188.66	1.512
TC R1418AB HEATER 14	773.9	0.495	171.28	1.373
TC R1618AB HEATER 16	798.8	3.182	196.22	1.573
TC R1718AB HEATER 17	790.3	1.060	187.64	1.504
TC R1817AB HEATER 18	756.7	3.748	154.08	1.235
TC R1918CD HEATER 19	795.4	7.990	192.82	1.545
TC R0118BC HEATER 1	830.0	2.687	227.34	1.822
TC R0118CD HEATER 1	838.9	1.485	236.26	1.894
TC R0118DE HEATER 1	826.4	0.919	223.82	1.794
TC R0219BC HEATER 2	862.1	16.546	259.48	2.080
TC R0418BC HEATER 4	820.8	0.849	218.18	1.749
TC R0418CD HEATER 4	814.8	1.768	212.18	1.701
TC R0418DE HEATER 4	820.5	0.919	217.88	1.746
TC R0518BC HEATER 5	798.0	0.848	195.42	1.566
TC R0518CD HEATER 5	806.4	0.071	203.80	1.633
TC R0718BC HEATER 7	805.5	2.051	202.86	1.626
TC R0718CD HEATER 7	799.0	3.111	196.34	1.574
TC R0718DE HEATER 7	799.8	0.354	197.14	1.580
TC R0818BC HEATER 8	799.1	0.919	196.50	1.575
TC R1718BC HEATER 17	791.6	1.768	189.00	1.515
TC R1918BC HEATER 19	805.7	2.616	203.12	1.628
TC R1918DE HEATER 19	797.6	10.111	195.00	1.563

OPERATING DATA FOR FFM SERIES 2 TEST 3 RUN 101
WHICH WAS DONE ON 12472 1128

DESCRIPTION	MEAN VALUE	STANDARD DEVIATION
HEATER 1 POWER KW	8.54	0.005
HEATER 8,18,19 POWER	28.35	0.028
HTR 12,13,14 POWER	22.90	0.030
HTR 2,7,9,17 POWER	35.63	0.067
HTR 4,5,11,15 POWER	32.50	0.044
HTR 3,6,10,16 POWER	34.96	0.100
TOTAL POWER	161.24	0.288
TEST SECT FLOW, GPM	54.43	0.056
TEST SECT INLET PR	33.16	0.049
TEST SECT OUTLET PR	8.91	0.065
TOTAL FLOW, GPM	107.60	1.214
PUMP OUTLET PR, PSI	34.21	0.043
PUMP SPEED, RPM	1472.40	0.548
BLOWER SPEED, RPM	780.14	0.241
AIR FLOW (200 F) CFM	8.76	0.173
TC 313 TEST SECT IN	590.75	0.187
TC 317 TEST SECT OUT	669.55	0.187
TC 300 PUMP OUTLET	592.85	0.388
TC 318 RADIATOR IN	669.15	0.231
TC 334 RADIATOR OUT	581.64	0.187
TC 336 PUMP INLET	591.00	0.189
TC 332 RAD AIR IN	89.79	0.206
TC 331 RAD AIR OUT	175.77	0.333

HEAT BALANCE ON SODIUM FLOWING THROUGH BUNDLE
HEAT SUPPLIED BY DUMMY FUEL RODS = 556235.00 BTU/HR
HEAT ADDED TO SODIUM = 580588.31 BTU/HR
PERCENT HEAT BALANCE = 104.38

RESULTS FOR UNGROUNDED JUNCTION THERMOCOUPLES
FFM SERIES 2 TEST 3 RUN 101 DONE ON 12472 1128

DESCRIPTION	TEMP DEG F	STD DEV	RISE AB INLET T	NORMALIZED TEMP
TC 1504U CH 37	607.9	0.411	17.13	0.227
TC 1706U CH 21	628.6	0.206	37.86	0.501
TC 1807U CH 24	644.5	0.231	53.76	0.712
TC 1108U CH 31	625.9	0.131	35.13	0.465
TC 0409U CH 13	644.3	0.189	53.55	0.709
TC 0509U CH 3	643.7	0.556	52.92	0.701
TC 1009U CH 29	620.5	0.358	29.72	0.394
TC 1409U CH 17	633.0	0.319	42.26	0.560
TC 1609U CH 21	640.8	0.340	50.05	0.663
TC 1914U CH 24	642.4	0.494	51.65	0.684
TC 0815U CH 8	672.8	0.421	82.08	1.087
TC 1316U CH 35	655.1	0.379	64.34	0.852
TC 1516U CH 37	646.9	0.506	56.20	0.744
TC 0817U CH 9	679.7	0.533	88.98	1.179
TC 1217U CH 33	646.1	0.494	55.40	0.734
TC 1318U CH 34	644.4	0.383	53.66	0.711
TC 1718U CH 22	678.3	0.342	87.60	1.160
TC 1219U CH 32	646.9	0.471	56.11	0.743
TC 1819U CH 24	671.8	0.383	81.01	1.073
TC 1120U CH 31	650.6	2.791	59.88	0.793
TC 0421U CH 13	693.6	0.471	102.83	1.362
TC 0521U CH 3	692.3	0.175	101.52	1.345
TC 1021U CH 29	651.2	0.352	60.43	0.800
TC 1421U CH 17	678.6	0.332	87.85	1.164
TC 1621U CH 21	684.0	0.480	93.28	1.236

RESULTS FOR GROUNDED JUNCTION THERMOCOUPLES
FFM SERIES 2 TEST 3 RUN 101 DONE ON 12472 1128

DESCRIPTION	TEMP DEG F	STD DEV	RISE AB INLET T	NORMALIZED TEMP
TC 0118C CH 3	683.9	1.969	93.18	1.234
TC 0618D CH 4	678.1	0.858	87.38	1.157
TC 0618C CH 19	678.8	0.882	88.06	1.166
TC 0219A HEATER 2	692.8	1.630	102.09	1.352
TC 0219B CH 10	683.1	1.345	92.36	1.223
TC 0919A HTR 9 EXT	686.9	1.066	96.15	1.274
TC 0919B CH 29	669.7	0.718	78.91	1.045
TC 0718C CH 5	692.2	0.972	101.49	1.344
TC 0718D CH 6	685.2	0.115	94.41	1.251
TC 0319A HEATER 3	684.4	0.598	93.63	1.240
TC 0319B CH 12	668.3	1.694	77.53	1.027

RESULTS FOR DUCT WALL THERMOCOUPLES
FFM SERIES 2 TEST 3 RUN 101 DONE ON 12472 1128

DESCRIPTION	TEMP DEG F	STD DEV	RISE AB INLET T	NORMALIZED TEMP
TC D0B04 DUCT B	597.1	0.794	6.40	0.085
TC D0E04 DUCT E	594.6	0.358	3.85	0.051
TC D0F04 DUCT F	595.6	0.512	4.84	0.064
TC D0B08 DUCT B	618.8	0.231	28.09	0.372
TC D0D08 DUCT D	602.6	0.408	11.85	0.157
TC D0F08 DUCT F	605.9	0.290	15.16	0.201
TC D0B12 DUCT B	596.6	0.225	5.82	0.077
TC D0E12 DUCT E	612.0	0.457	21.26	0.282
TC D0F12 DUCT F	612.2	0.506	21.42	0.284
TC D0B16 DUCT B	635.7	0.333	44.93	0.595
TC D0D16 DUCT D	614.7	0.206	23.94	0.317
TC D0F16 DUCT F	624.3	0.249	33.55	0.444
TC D0D18 DUCT D	619.0	0.205	28.23	0.374
TC D0E18 DUCT E	626.6	0.397	35.85	0.475
TC DAB18 DUCT AB	636.5	1.484	45.77	0.606
TC DDE18 DUCT DE	622.6	0.209	31.89	0.422
TC DEF18 DUCT EF	626.9	0.473	36.15	0.479
TC D0F18 DUCT F	631.8	0.210	41.08	0.544
TC DFA18 DUCT FA	634.3	0.231	43.55	0.577
TC D0B21 DUCT B	630.3	0.221	39.53	0.524
TC D0D21 DUCT D	626.8	0.753	36.01	0.477
TC D0F21 DUCT F	645.2	0.635	54.47	0.722
TC D0B23 DUCT B	639.1	0.319	48.32	0.640
TC D0D23 DUCT D	633.5	0.742	42.77	0.567
TC D0F23 DUCT F	653.4	0.704	62.68	0.830

RESULTS FOR THERMOCOUPLES IN CHANNEL EXITS
FFM SERIES 2 TEST 3 RUN 101 DONE ON 12472 1128

DESCRIPTION	TEMP DEG F	STD DEV	RISE AB INLET T	NORMALIZED TEMP
TC EC03 EXIT CH 3	682.7	0.298	91.95	1.218
TC EC16 EXIT CH 16	675.4	0.480	84.67	1.122
TC EC17 EXIT CH 17	658.7	0.641	67.93	0.900
TC EC34 EXIT CH 34	652.5	0.679	61.71	0.817
TC EC35 EXIT CH 35	655.1	0.405	64.32	0.852
TC EC36 EXIT CH 36	658.3	0.480	67.53	0.895
TC EC06 EXIT CH 6	690.1	0.829	99.36	1.316
TC EC08 EXIT CH 8	678.2	0.810	87.43	1.158
TC EC27 EXIT CH 27	653.7	1.040	62.97	0.834
TC EA36 EXIT ANN EF	660.2	0.831	69.48	0.920
TC EA27 EXIT ANN BC	657.0	0.594	66.24	0.877
TC EA28 EXIT ANN C	656.4	0.759	65.62	0.869

RESULTS FOR THERMOCOUPLES INSIDE HEATERS
FFM SERIES 2 TEST 3 RUN 101 DONE ON 12472 1128

DESCRIPTION	TEMP DEG F	STD DEV	RISE AB INLET T	NORMALIZED TEMP
TC R0118AB HTR 1 INT	728.9	1.791	138.17	1.830
TC R0219AB HTR 2 INT	736.3	3.374	145.60	1.929
TC R0418AB HTR 4 INT	733.3	4.207	142.50	1.888
TC R0518AB HTR 5 INT	724.5	2.869	133.75	1.772
TC R1218AB HEATER 12	693.6	1.861	102.88	1.363
TC R1318DE HEATER 13	728.9	1.127	138.18	1.830
TC R1418AB HEATER 14	706.5	2.743	115.77	1.533
TC R1618AB HEATER 16	743.5	4.784	152.73	2.023
TC R1718AB HEATER 17	722.6	1.223	131.82	1.746
TC R1817AB HEATER 18	721.9	1.769	131.16	1.737
TC R1918CD HEATER 19	743.5	10.065	152.75	2.023
TC R0118BC HEATER 1	746.4	1.370	155.62	2.061
TC R0118CD HEATER 1	763.7	1.229	172.97	2.291
TC R0118DE HEATER 1	750.2	1.242	159.48	2.112
TC R0219BC HEATER 2	730.1	17.888	139.35	1.846
TC R0418BC HEATER 4	743.6	2.978	152.87	2.025
TC R0418CD HEATER 4	737.1	1.245	146.40	1.939
TC R0418DE HEATER 4	744.0	2.403	153.23	2.030
TC R0518BC HEATER 5	726.1	3.528	135.33	1.793
TC R0518CD HEATER 5	731.9	1.791	141.18	1.870
TC R0718BC HEATER 7	745.4	1.670	154.65	2.048
TC R0718CD HEATER 7	735.8	3.839	145.05	1.921
TC R0718DE HEATER 7	738.3	4.622	147.57	1.955
TC R0818BC HEATER 8	761.0	2.794	170.22	2.255
TC R1718BC HEATER 17	735.6	2.105	144.90	1.919
TC R1918BC HEATER 19	756.6	4.541	165.88	2.197
TC R1918DE HEATER 19	711.1	5.346	120.31	1.594

OPERATING DATA FOR FFM SERIES 2 TEST 3 RUN 102
WHICH WAS DONE ON 12572 1058

DESCRIPTION	MEAN VALUE	STANDARD DEVIATION
HEATER 1 POWER KW	8.77	0.023
HEATER 8,18,19 POWER	28.69	0.009
HTR 12,13,14 POWER	23.70	0.235
HTR 2,7,9,17 POWER	35.50	0.179
HTR 4,5,11,15 POWER	33.73	0.158
HTR 3,6,10,16 POWER	35.49	0.051
TOTAL POWER	164.24	0.615
TEST SECT FLOW, GPM	42.97	0.062
TEST SECT INLET PR	24.73	0.061
TEST SECT OUTLET PR	8.06	0.033
TOTAL FLOW, GPM	86.15	1.417
PUMP OUTLET PR, PSI	25.46	0.060
PUMP SPEED, RPM	1181.80	0.447
BLOWER SPEED, RPM	691.48	0.618
AIR FLOW (200 F) CFM	7.28	0.108
TC 313 TEST SECT IN	601.28	0.532
TC 317 TEST SECT OUT	703.33	0.233
TC 300 PUMP OUTLET	601.76	0.708
TC 318 RADIATOR IN	702.34	0.486
TC 334 RADIATOR OUT	593.33	0.859
TC 336 PUMP INLET	601.47	0.429
TC 332 RAD AIR IN	84.31	0.431
TC 331 RAD AIR OUT	180.77	0.571

HEAT BALANCE ON SODIUM FLOWING THROUGH BUNDLE
HEAT SUPPLIED BY DUMMY FUEL RODS = 566480.00 BTU/HR
HEAT ADDED TO SODIUM = 591889.88 BTU/HR
PERCENT HEAT BALANCE = 104.49

RESULTS FOR UNGROUNDED JUNCTION THERMOCOUPLES
FFM SERIES 2 TEST 3 RUN 102 DONE ON 12572 1058

DESCRIPTION	TEMP DEG F	STD DEV	RISE AB INLET T	NORMALIZED TEMP
TC 1504U CH 37	622.1	0.600	20.83	0.213
TC 1706U CH 21	647.2	0.285	45.94	0.470
TC 1807U CH 24	665.0	0.287	63.73	0.653
TC 1108U CH 31	644.5	0.511	43.23	0.443
TC 0409U CH 13	670.0	1.076	68.68	0.703
TC 0509U CH 3	667.9	0.914	66.62	0.682
TC 1009U CH 29	638.2	0.462	36.89	0.378
TC 1409U CH 17	654.8	0.329	53.48	0.548
TC 1609U CH 21	661.5	0.372	60.21	0.616
TC 1914U CH 24	665.4	0.934	64.17	0.657
TC 0815U CH 8	703.1	0.547	101.82	1.043
TC 1316U CH 35	683.1	0.360	81.84	0.838
TC 1516U CH 37	672.6	0.433	71.29	0.730
TC 0817U CH 9	713.1	0.782	111.78	1.144
TC 1217U CH 33	673.0	0.655	71.68	0.734
TC 1318U CH 34	670.5	0.395	69.18	0.708
TC 1718U CH 22	711.9	1.087	110.63	1.133
TC 1219U CH 32	677.2	0.248	75.96	0.778
TC 1819U CH 24	705.5	0.265	104.23	1.067
TC 1120U CH 31	680.3	0.884	79.02	0.809
TC 0421U CH 13	736.9	0.539	135.58	1.388
TC 0521U CH 3	737.2	0.566	135.90	1.391
TC 1021U CH 29	680.7	0.320	79.41	0.813
TC 1421U CH 17	716.1	0.095	114.87	1.176
TC 1621U CH 21	718.6	0.209	117.33	1.201

RESULTS FOR GROUNDED JUNCTION THERMOCOUPLES
FFM SERIES 2 TEST 3 RUN 102 DONE ON 12572 1058

DESCRIPTION	TEMP DEG F	STD DEV	RISE AB INLET T	NORMALIZED TEMP
TC 0118C CH 3	727.3	0.061	126.01	1.290
TC 0618D CH 4	722.1	0.965	120.78	1.237
TC 0618C CH 19	717.2	1.024	115.96	1.187
TC 0219A HEATER 2	734.3	1.464	132.97	1.361
TC 0219B CH 10	719.7	1.906	118.44	1.213
TC 0919A HTR 9 EXT	724.6	0.280	123.33	1.263
TC 0919B CH 29	705.8	0.405	104.48	1.070
TC 0718C CH 5	734.1	1.418	132.80	1.360
TC 0718D CH 6	725.5	1.152	124.21	1.272
TC 0319A HEATER 3	724.5	0.429	123.24	1.262
TC 0319B CH 12	708.8	1.081	107.51	1.101

RESULTS FOR DUCT WALL THERMOCOUPLES
FFM SERIES 2 TEST 3 RUN 102 DONE ON 12572 1058

DESCRIPTION	TEMP DEG F	STD DEV	RISE AB INLET T	NORMALIZED TEMP
TC DOB04 DUCT B	610.5	0.196	9.23	0.095
TC DOE04 DUCT E	607.5	0.500	6.19	0.063
TC DOF04 DUCT F	607.7	0.441	6.45	0.066
TC DOB08 DUCT B	633.0	0.519	31.73	0.325
TC DOD08 DUCT D	617.3	0.328	16.03	0.164
TC DOF08 DUCT F	622.9	0.338	21.63	0.221
TC DOB12 DUCT B	614.2	0.711	12.94	0.132
TC DOE12 DUCT E	631.9	0.718	30.63	0.314
TC DOF12 DUCT F	631.3	0.441	30.01	0.307
TC DOB16 DUCT B	659.8	0.585	58.55	0.599
TC DOD16 DUCT D	634.6	0.759	33.33	0.341
TC DOF16 DUCT F	646.4	0.673	45.10	0.462
TC DOD18 DUCT D	641.0	1.816	39.68	0.406
TC DOE18 DUCT E	650.6	0.324	49.29	0.505
TC DAB18 DUCT AB	660.9	0.643	59.59	0.610
TC DDE18 DUCT DE	646.6	0.420	45.28	0.464
TC DEF18 DUCT EF	649.0	0.488	47.73	0.489
TC DOF18 DUCT F	656.8	0.847	55.47	0.568
TC DFA18 DUCT FA	659.2	0.241	57.89	0.593
TC DOB21 DUCT B	657.1	0.175	55.80	0.571
TC DOD21 DUCT D	653.4	0.282	52.11	0.534
TC DOF21 DUCT F	677.7	1.121	76.38	0.782
TC DOB23 DUCT B	667.6	0.320	66.33	0.679
TC DOD23 DUCT D	664.4	1.216	63.16	0.647
TC DOF23 DUCT F	685.3	0.456	83.99	0.860

RESULTS FOR THERMOCOUPLES IN CHANNEL EXITS
FFM SERIES 2 TEST 3 RUN 102 DONE ON 12572 1058

DESCRIPTION	TEMP DEG F	STD DEV	RISE AB INLET T	NORMALIZED TEMP
TC EC03 EXIT CH 3	722.3	0.150	120.99	1.239
TC EC16 EXIT CH 16	713.8	0.462	112.52	1.152
TC EC17 EXIT CH 17	688.9	0.102	87.63	0.897
TC EC34 EXIT CH 34	683.2	0.203	81.95	0.839
TC EC35 EXIT CH 35	687.3	0.221	86.03	0.881
TC EC36 EXIT CH 36	691.5	0.338	90.21	0.924
TC EC06 EXIT CH 6	731.9	0.343	130.62	1.337
TC EC08 EXIT CH 8	708.5	0.465	107.26	1.098
TC EC27 EXIT CH 27	682.2	0.210	80.88	0.828
TC EA36 EXIT ANN EF	690.4	0.381	89.16	0.913
TC EA27 EXIT ANN BC	685.1	0.446	83.86	0.859
TC EA28 EXIT ANN C	684.5	0.352	83.26	0.852

RESULTS FOR THERMOCOUPLES INSIDE HEATERS
FFM SERIES 2 TEST 3 RUN 102 DONE ON 12572 1058

DESCRIPTION	TEMP DEG F	STD DEV	RISE AB INLET T	NORMALIZED TEMP
TC R0118AB HTR 1 INT	773.3	2.696	172.00	1.761
TC R0219AB HTR 2 INT	777.9	3.700	176.60	1.808
TC R0418AB HTR 4 INT	797.7	6.859	196.45	2.011
TC R0518AB HTR 5 INT	762.5	3.261	161.24	1.651
TC R1218AB HEATER 12	728.8	1.223	127.57	1.306
TC R1318DE HEATER 13	761.6	1.247	160.33	1.642
TC R1418AB HEATER 14	751.5	0.934	150.25	1.538
TC R1618AB HEATER 16	795.8	2.771	194.50	1.991
TC R1718AB HEATER 17	767.3	4.138	166.03	1.700
TC R1817AB HEATER 18	745.0	2.138	143.68	1.471
TC R1918CD HEATER 19	777.4	5.914	176.16	1.804
TC R0118BC HEATER 1	791.0	5.316	189.74	1.943
TC R0118CD HEATER 1	802.9	0.733	201.60	2.064
TC R0118DE HEATER 1	792.8	2.659	191.53	1.961
TC R0219BC HEATER 2	757.4	37.963	156.10	1.598
TC R0418BC HEATER 4	781.7	0.234	180.40	1.847
TC R0418CD HEATER 4	776.5	0.849	175.20	1.794
TC R0418DE HEATER 4	785.1	1.492	183.85	1.882
TC R0518BC HEATER 5	768.7	4.784	167.38	1.714
TC R0518CD HEATER 5	767.7	7.378	166.43	1.704
TC R0718BC HEATER 7	777.5	3.747	176.20	1.804
TC R0718CD HEATER 7	778.0	2.859	176.72	1.809
TC R0718DE HEATER 7	775.5	2.955	174.21	1.784
TC R0818BC HEATER 8	793.5	1.418	192.26	1.968
TC R1718BC HEATER 17	763.1	7.422	161.83	1.657
TC R1918BC HEATER 19	787.9	3.280	186.62	1.911
TC R1918DE HEATER 19	785.5	2.460	184.19	1.886

OPERATING DATA FOR FFM SERIES 2 TEST 3 RUN 103
WHICH WAS DONE ON 12572 1402

DESCRIPTION	MEAN VALUE	STANDARD DEVIATION
HEATER 1 POWER KW	8.75	0.080
HEATER 8,18,19 POWER	28.76	0.020
HTR 12,13,14 POWER	24.67	0.299
HTR 2,7,9,17 POWER	36.72	0.204
HTR 4,5,11,15 POWER	33.53	0.324
HTR 3,6,10,16 POWER	35.01	0.100
TOTAL POWER	165.79	0.928
TEST SECT FLOW, GPM	32.09	0.058
TEST SECT INLET PR	18.15	0.098
TEST SECT OUTLET PR	7.37	0.037
TOTAL FLOW, GPM	64.54	0.520
PUMP OUTLET PR, PSI	18.20	0.045
PUMP SPEED, RPM	900.86	0.586
BLOWER SPEED, RPM	651.53	1.146
AIR FLOW (200 F) CFM	6.12	0.170
TC 313 TEST SECT IN	609.83	0.401
TC 317 TEST SECT OUT	748.54	0.486
TC 300 PUMP OUTLET	610.08	0.545
TC 318 RADIATOR IN	747.74	0.462
TC 334 RADIATOR OUT	601.83	0.561
TC 336 PUMP INLET	609.14	0.566
TC 332 RAD AIR IN	89.05	0.253
TC 331 RAD AIR OUT	193.51	0.412

HEAT BALANCE ON SODIUM FLOWING THROUGH BUNDLE
HEAT SUPPLIED BY DUMMY FUEL RODS = 571807.50 BTU/HR
HEAT ADDED TO SODIUM = 599503.31 BTU/HR
PERCENT HEAT BALANCE = 104.84

RESULTS FOR UNGROUNDED JUNCTION THERMOCOUPLES
FFM SERIES 2 TEST 3 RUN 103 DONE ON 12572 1402

DESCRIPTION	TEMP DEG F	STD DEV	RISE AB INLET T	NORMALIZED TEMP
TC 1504U CH 37	635.4	0.594	25.60	0.193
TC 1706U CH 21	669.3	0.909	59.44	0.449
TC 1807U CH 24	691.4	0.431	81.62	0.617
TC 1108U CH 31	664.8	0.586	54.97	0.415
TC 0409U CH 13	701.0	0.538	91.19	0.689
TC 0509U CH 3	697.9	0.377	88.06	0.666
TC 1009U CH 29	658.9	0.608	49.10	0.371
TC 1409U CH 17	682.1	0.706	72.30	0.546
TC 1609U CH 21	686.7	0.467	76.83	0.581
TC 1914U CH 24	692.3	0.670	82.48	0.623
TC 0815U CH 8	745.1	0.434	135.31	1.023
TC 1316U CH 35	720.0	0.568	110.13	0.832
TC 1516U CH 37	703.1	0.680	93.26	0.705
TC 0817U CH 9	759.8	0.352	149.95	1.133
TC 1217U CH 33	706.7	0.712	96.90	0.732
TC 1318U CH 34	703.2	0.585	93.40	0.706
TC 1718U CH 22	761.3	0.135	151.42	1.145
TC 1219U CH 32	713.0	0.993	103.18	0.780
TC 1819U CH 24	750.5	1.104	140.67	1.063
TC 1120U CH 31	721.8	2.676	111.97	0.846
TC 0421U CH 13	790.1	1.192	180.30	1.363
TC 0521U CH 3	793.0	1.384	183.22	1.385
TC 1021U CH 29	718.0	1.064	108.18	0.818
TC 1421U CH 17	762.4	0.908	152.53	1.153
TC 1621U CH 21	759.8	1.160	150.00	1.134

RESULTS FOR GROUNDED JUNCTION THERMOCOUPLES
FFM SERIES 2 TEST 3 RUN 103 DONE ON 12572 1402

DESCRIPTION	TEMP DEG F	STD DEV	RISE AB INLET T	NORMALIZED TEMP
TC 0118C CH 3	779.4	0.843	169.54	1.281
TC 0618D CH 4	773.5	0.896	163.65	1.237
TC 0618C CH 19	766.5	1.677	156.72	1.185
TC 0219A HEATER 2	787.5	1.615	177.71	1.343
TC 0219B CH 10	771.2	1.243	161.38	1.220
TC 0919A HTR 9 EXT	772.8	0.698	162.99	1.232
TC 0919B CH 29	750.2	0.987	140.33	1.061
TC 0718C CH 5	788.0	2.404	178.19	1.347
TC 0718D CH 6	782.9	1.058	173.10	1.308
TC 0319A HEATER 3	771.5	1.043	161.67	1.222
TC 0319B CH 12	757.5	1.300	147.72	1.117

RESULTS FOR DUCT WALL THERMOCOUPLES
FFM SERIES 2 TEST 3 RUN 103 DONE ON 12572 1402

DESCRIPTION	TEMP DEG F	STD DEV	RISE AB INLET T	NORMALIZED TEMP
TC DOB04 DUCT B	622.3	0.518	12.45	0.094
TC DOE04 DUCT E	619.5	0.666	9.66	0.073
TC DOF04 DUCT F	619.3	0.739	9.42	0.071
TC DOB08 DUCT B	660.5	0.449	50.65	0.383
TC DOD08 DUCT D	633.2	0.844	23.39	0.177
TC DOF08 DUCT F	640.8	0.481	30.99	0.234
TC DOB12 DUCT B	625.3	0.408	15.43	0.117
TC DOE12 DUCT E	653.2	0.807	43.33	0.328
TC DOF12 DUCT F	652.4	0.789	42.58	0.322
TC DOB16 DUCT B	692.0	1.538	82.13	0.621
TC DOD16 DUCT D	660.5	0.228	50.68	0.383
TC DOF16 DUCT F	673.3	1.059	63.43	0.479
TC DOD18 DUCT D	668.0	1.819	58.21	0.440
TC DOE18 DUCT E	681.2	0.560	71.39	0.540
TC DAB18 DUCT AB	693.3	1.181	83.46	0.631
TC DDE18 DUCT DE	675.6	0.767	65.82	0.497
TC DEF18 DUCT EF	673.9	0.513	64.03	0.484
TC DOF18 DUCT F	687.4	0.595	77.62	0.587
TC DFA18 DUCT FA	691.6	0.709	81.82	0.618
TC DOB21 DUCT B	689.9	0.996	80.05	0.605
TC DOD21 DUCT D	684.9	1.238	75.12	0.568
TC DOF21 DUCT F	717.6	1.211	107.80	0.815
TC DOB23 DUCT B	702.7	0.870	92.84	0.702
TC DOD23 DUCT D	699.0	1.092	89.20	0.674
TC DOF23 DUCT F	726.8	0.887	117.02	0.884

RESULTS FOR THERMOCOUPLES IN CHANNEL EXITS
FFM SERIES 2 TEST 3 RUN 103 DONE ON 12572 1402

DESCRIPTION	TEMP DEG F	STD DEV	RISE AB INLET T	NORMALIZED TEMP
TC EC03 EXIT CH 3	773.4	0.857	163.61	1.237
TC EC16 EXIT CH 16	758.9	0.894	149.06	1.127
TC EC17 EXIT CH 17	735.0	0.947	125.13	0.946
TC EC34 EXIT CH 34	721.8	1.001	112.01	0.847
TC EC35 EXIT CH 35	725.4	1.154	115.59	0.874
TC EC36 EXIT CH 36	731.2	0.865	121.35	0.917
TC EC06 EXIT CH 6	786.4	0.819	176.54	1.334
TC EC08 EXIT CH 8	747.0	0.595	137.16	1.037
TC EC27 EXIT CH 27	719.2	0.913	109.34	0.826
TC EA36 EXIT ANN EF	730.3	0.767	120.50	0.911
TC EA27 EXIT ANN BC	723.8	0.553	113.92	0.861
TC EA28 EXIT ANN C	722.9	0.710	113.09	0.855

RESULTS FOR THERMOCOUPLES INSIDE HEATERS
FFM SERIES 2 TEST 3 RUN 103 DONE ON 12572 1402

DESCRIPTION	TEMP DEG F	STD DEV	RISE AB INLET T	NORMALIZED TEMP
TC R0118AB HTR 1 INT	827.9	3.464	218.10	1.649
TC R0219AB HTR 2 INT	832.2	5.477	222.41	1.681
TC R0418AB HTR 4 INT	842.5	7.334	232.65	1.758
TC R0518AB HTR 5 INT	814.5	3.130	204.68	1.547
TC R1218AB HEATER 12	764.1	1.591	154.31	1.166
TC R1318DE HEATER 13	800.2	2.467	190.38	1.439
TC R1418AB HEATER 14	786.4	4.011	176.54	1.334
TC R1618AB HEATER 16	818.6	6.150	208.79	1.578
TC R1718AB HEATER 17	815.0	1.835	205.15	1.551
TC R1817AB HEATER 18	781.8	1.564	172.01	1.300
TC R1918CD HEATER 19	817.2	11.972	207.38	1.567
TC R0118BC HEATER 1	841.2	5.661	231.37	1.749
TC R0118CD HEATER 1	856.8	1.985	246.97	1.867
TC R0118DE HEATER 1	835.5	3.568	225.66	1.706
TC R0219BC HEATER 2	859.8	10.785	249.94	1.889
TC R0418BC HEATER 4	831.6	1.131	221.81	1.677
TC R0418CD HEATER 4	825.1	2.275	215.32	1.627
TC R0418DE HEATER 4	832.5	1.655	222.69	1.683
TC R0518BC HEATER 5	814.8	5.869	204.97	1.549
TC R0518CD HEATER 5	823.8	3.756	213.99	1.617
TC R0718BC HEATER 7	822.9	4.322	213.08	1.611
TC R0718CD HEATER 7	824.3	5.332	214.43	1.621
TC R0718DE HEATER 7	831.2	3.606	221.35	1.673
TC R0818BC HEATER 8	829.6	4.967	219.82	1.662
TC R1718BC HEATER 17	817.8	3.238	207.96	1.572
TC R1918BC HEATER 19	840.1	2.787	230.32	1.741
TC R1918DE HEATER 19	836.9	9.102	227.07	1.716

OPERATING DATA FOR FFM SERIES 2 TEST 3 RUN 201
WHICH WAS DONE ON 12472 1319

DESCRIPTION	MEAN VALUE	STANDARD DEVIATION
HEATER 1 POWER KW	8.63	0.005
HEATER 8,18,19 POWER	23.55	0.054
HTR 12,13,14 POWER	27.80	0.0
HTR 2,7,9,17 POWER	32.08	0.044
HTR 4,5,11,15 POWER	36.04	0.075
HTR 3,6,10,16 POWER	34.53	0.038
TOTAL POWER	160.90	0.200
TEST SECT FLOW, GPM	54.56	0.091
TEST SECT INLET PR	33.19	0.094
TEST SECT OUTLET PR	8.93	0.079
TOTAL FLOW, GPM	107.65	0.827
PUMP OUTLET PR, PSI	34.14	0.051
PUMP SPEED, RPM	1482.00	0.0
BLOWER SPEED, RPM	770.45	0.597
AIR FLOW (200 F) CFM	8.38	0.158
TC 313 TEST SECT IN	596.26	0.392
TC 317 TEST SECT OUT	675.22	0.204
TC 300 PUMP OUTLET	597.66	0.536
TC 318 RADIATOR IN	674.30	0.343
TC 334 RADIATOR OUT	587.73	0.252
TC 336 PUMP INLET	596.20	0.465
TC 332 RAD AIR IN	93.64	0.415
TC 331 RAD AIR OUT	181.54	0.465

HEAT BALANCE ON SODIUM FLOWING THROUGH BUNDLE
HEAT SUPPLIED BY DUMMY FUEL RODS = 555381.25 BTU/HR
HEAT ADDED TO SODIUM = 582329.31 BTU/HR
PERCENT HEAT BALANCE = 104.85

RESULTS FOR UNGROUNDED JUNCTION THERMOCOUPLES
FFM SERIES 2 TEST 3 RUN 201 DONE ON 12472 1319

DESCRIPTION	TEMP DEG F	STD DEV	RISE AB INLET T	NORMALIZED TEMP
TC 1504U CH 37	614.3	0.252	18.08	0.240
TC 1706U CH 21	632.2	0.204	35.98	0.478
TC 1807U CH 24	641.3	0.426	45.02	0.598
TC 1108U CH 31	635.3	0.531	39.02	0.518
TC 0409U CH 13	654.8	0.531	58.51	0.777
TC 0509U CH 3	652.7	0.429	56.42	0.749
TC 1009U CH 29	626.3	0.248	30.04	0.399
TC 1409U CH 17	646.9	0.204	50.62	0.672
TC 1609U CH 21	644.6	0.204	48.35	0.642
TC 1914U CH 24	640.1	0.324	43.80	0.582
TC 0815U CH 8	666.2	0.271	69.93	0.929
TC 1316U CH 35	668.7	0.095	72.44	0.962
TC 1516U CH 37	653.9	0.426	57.60	0.765
TC 0817U CH 9	674.5	0.529	78.24	1.039
TC 1217U CH 33	659.9	0.465	63.69	0.846
TC 1318U CH 34	655.3	0.580	59.01	0.784
TC 1718U CH 22	676.8	0.610	80.52	1.069
TC 1219U CH 32	662.8	0.401	66.56	0.884
TC 1819U CH 24	668.2	0.636	71.92	0.955
TC 1120U CH 31	667.9	1.825	71.67	0.952
TC 0421U CH 13	710.8	0.322	114.56	1.521
TC 0521U CH 3	711.5	0.212	115.24	1.530
TC 1021U CH 29	663.6	0.341	67.35	0.894
TC 1421U CH 17	698.2	0.190	101.92	1.353
TC 1621U CH 21	687.2	0.756	90.97	1.208

RESULTS FOR GROUNDED JUNCTION THERMOCOUPLES
FFM SERIES 2 TEST 3 RUN 201 DONE ON 12472 1319

DESCRIPTION	TEMP DEG F	STD DEV	RISE AB INLET T	NORMALIZED TEMP
TC 0118C CH 3	699.4	0.504	103.12	1.369
TC 0618D CH 4	693.2	1.084	96.94	1.287
TC 0618C CH 19	687.9	0.337	91.62	1.217
TC 0219A HEATER 2	694.4	0.902	98.16	1.303
TC 0219B CH 10	685.9	0.763	89.68	1.191
TC 0919A HTR 9 EXT	690.4	0.063	94.18	1.251
TC 0919B CH 29	678.6	0.063	82.38	1.094
TC 0718C CH 5	691.7	3.522	95.43	1.267
TC 0718D CH 6	687.3	0.722	91.06	1.209
TC 0319A HEATER 3	695.3	0.826	99.02	1.315
TC 0319B CH 12	683.4	0.778	87.15	1.157

RESULTS FOR DUCT WALL THERMOCOUPLES
FFM SERIES 2 TEST 3 RUN 201 DONE ON 12472 1319

DESCRIPTION	TEMP DEG F	STD DEV	RISE AB INLET T	NORMALIZED TEMP
TC DOB04 DUCT B	602.6	1.191	6.30	0.084
TC DOE04 DUCT E	601.8	0.429	5.56	0.074
TC DOF04 DUCT F	600.9	0.681	4.64	0.062
TC DOB08 DUCT B	605.2	0.271	8.97	0.119
TC DOD08 DUCT D	609.5	0.285	13.28	0.176
TC DOF08 DUCT F	612.3	0.263	15.99	0.212
TC DOB12 DUCT B	616.2	0.204	19.95	0.265
TC DOE12 DUCT E	622.6	0.392	26.36	0.350
TC DOF12 DUCT F	616.0	0.665	19.77	0.263
TC DOB16 DUCT B	635.1	0.736	38.82	0.515
TC DOD16 DUCT D	624.8	0.844	28.53	0.379
TC DOF16 DUCT F	628.1	0.232	31.82	0.423
TC DOD18 DUCT D	628.0	0.428	31.76	0.422
TC DOE18 DUCT E	635.6	0.324	39.30	0.522
TC DAB18 DUCT AB	633.4	0.039	37.16	0.493
TC DDE18 DUCT DE	632.3	0.248	36.04	0.479
TC DEF18 DUCT EF	634.2	0.389	37.97	0.504
TC DOF18 DUCT F	636.7	0.435	40.42	0.537
TC DFA18 DUCT FA	634.7	0.392	38.45	0.511
TC DOB21 DUCT B	638.7	0.227	42.42	0.563
TC DOD21 DUCT D	640.1	0.316	43.80	0.582
TC DOF21 DUCT F	650.7	1.576	54.45	0.723
TC DOB23 DUCT B	644.9	0.107	48.64	0.646
TC DOD23 DUCT D	646.7	1.061	50.45	0.670
TC DOF23 DUCT F	655.0	0.417	58.72	0.780

RESULTS FOR THERMOCOUPLES IN CHANNEL EXITS
FFM SERIES 2 TEST 3 RUN 201 DONE ON 12472 1319

DESCRIPTION	TEMP DEG F	STD DEV	RISE AB INLET T	NORMALIZED TEMP
TC EC03 EXIT CH 3	699.3	0.365	102.99	1.368
TC EC16 EXIT CH 16	691.0	0.190	94.73	1.258
TC EC17 EXIT CH 17	666.8	0.190	70.49	0.936
TC EC34 EXIT CH 34	663.8	0.248	67.53	0.897
TC EC35 EXIT CH 35	663.6	0.063	67.36	0.894
TC EC36 EXIT CH 36	665.3	0.719	69.00	0.916
TC EC06 EXIT CH 6	691.1	0.087	94.80	1.259
TC EC08 EXIT CH 8	673.4	0.271	77.14	1.024
TC EC27 EXIT CH 27	660.9	0.248	64.62	0.858
TC EA36 EXIT ANN EF	665.5	0.407	69.28	0.920
TC EA27 EXIT ANN BC	662.2	0.554	65.98	0.876
TC EA28 EXIT ANN C	665.0	0.263	68.72	0.913

RESULTS FOR THERMOCOUPLES INSIDE HEATERS
FFM SERIES 2 TEST 3 RUN 201 DONE ON 12472 1319

DESCRIPTION	TEMP DEG F	STD DEV	RISE AB INLET T	NORMALIZED TEMP
TC R0118AB HTR 1 INT	745.4	3.407	149.11	1.980
TC R0219AB HTR 2 INT	727.7	5.174	131.47	1.746
TC R0418AB HTR 4 INT	780.6	2.406	184.37	2.448
TC R0518AB HTR 5 INT	747.0	3.650	150.77	2.002
TC R1218AB HEATER 12	724.3	0.063	128.02	1.700
TC R1318DE HEATER 13	762.2	1.417	165.98	2.204
TC R1418AB HEATER 14	744.3	1.486	148.01	1.965
TC R1618AB HEATER 16	758.9	8.020	162.67	2.160
TC R1718AB HEATER 17	727.3	1.724	131.06	1.740
TC R1817AB HEATER 18	706.5	5.180	110.26	1.464
TC R1918CD HEATER 19	730.9	7.314	134.64	1.788
TC R0118BC HEATER 1	759.2	1.775	162.94	2.164
TC R0118CD HEATER 1	773.6	0.736	177.35	2.355
TC R0118DE HEATER 1	760.6	4.067	164.35	2.182
TC R0219BC HEATER 2	844.3	79.714	248.06	3.294
TC R0418BC HEATER 4	761.6	0.473	165.31	2.195
TC R0418CD HEATER 4	755.8	3.100	159.56	2.119
TC R0418DE HEATER 4	762.6	2.173	166.30	2.208
TC R0518BC HEATER 5	747.2	5.483	150.93	2.004
TC R0518CD HEATER 5	748.2	4.992	151.91	2.017
TC R0718BC HEATER 7	736.7	3.264	140.43	1.865
TC R0718CD HEATER 7	729.9	5.332	133.62	1.774
TC R0718DE HEATER 7	731.2	2.053	134.91	1.791
TC R0818BC HEATER 8	741.2	0.895	144.92	1.924
TC R1718BC HEATER 17	726.4	1.316	130.10	1.728
TC R1918BC HEATER 19	735.8	3.367	139.52	1.853
TC R1918DE HEATER 19	731.1	3.888	134.81	1.790

OPERATING DATA FOR FFM SERIES 2 TEST 3 RUN 202
WHICH WAS DONE ON 12572 1004

DESCRIPTION	MEAN VALUE	STANDARD DEVIATION
HEATER 1 POWER KW	8.79	0.041
HEATER 8,18,19 POWER	24.19	0.191
HTR 12,13,14 POWER	27.92	0.0
HTR 2,7,9,17 POWER	34.17	0.013
HTR 4,5,11,15 POWER	37.58	0.260
HTR 3,6,10,16 POWER	35.70	0.121
TOTAL POWER	166.62	0.630
TEST SECT FLOW, GPM	42.95	0.045
TEST SECT INLET PR	24.59	0.122
TEST SECT OUTLET PR	8.06	0.039
TOTAL FLOW, GPM	86.80	0.966
PUMP OUTLET PR, PSI	25.35	0.051
PUMP SPEED, RPM	1179.80	0.447
BLOWER SPEED, RPM	689.16	0.823
AIR FLOW (200 F) CFM	7.29	0.150
TC 313 TEST SECT IN	602.47	0.330
TC 317 TEST SECT OUT	705.21	0.632
TC 300 PUMP OUTLET	602.54	0.444
TC 318 RADIATOR IN	704.14	0.617
TC 334 RADIATOR OUT	594.95	0.541
TC 336 PUMP INLET	602.63	0.546
TC 332 RAD AIR IN	84.98	0.476
TC 331 RAD AIR OUT	181.61	0.325

HEAT BALANCE ON SODIUM FLOWING THROUGH BUNDLE
HEAT SUPPLIED BY DUMMY FUEL RODS = 574915.06 BTU/HR
HEAT ADDED TO SODIUM = 595417.56 BTU/HR
PERCENT HEAT BALANCE = 103.57

RESULTS FOR UNGROUNDED JUNCTION THERMOCOUPLES
FFM SERIES 2 TEST 3 RUN 202 DONE ON 12572 1004

DESCRIPTION	TEMP DEG F	STD DEV	RISE AB INLET T	NORMALIZED TEMP
TC 1504U CH 37	624.4	0.487	21.92	0.221
TC 1706U CH 21	646.5	0.371	44.03	0.444
TC 1807U CH 24	658.6	0.506	56.10	0.566
TC 1108U CH 31	650.8	0.637	48.36	0.487
TC 0409U CH 13	677.0	0.681	74.55	0.751
TC 0509U CH 3	674.2	0.818	71.76	0.723
TC 1009U CH 29	640.7	0.338	38.25	0.386
TC 1409U CH 17	664.4	0.460	61.94	0.624
TC 1609U CH 21	661.4	0.632	58.98	0.595
TC 1914U CH 24	656.6	1.012	54.14	0.546
TC 0815U CH 8	692.4	0.681	89.97	0.907
TC 1316U CH 35	692.8	0.458	90.36	0.911
TC 1516U CH 37	675.4	0.637	72.90	0.735
TC 0817U CH 9	704.6	0.668	102.14	1.030
TC 1217U CH 33	681.9	0.731	79.41	0.800
TC 1318U CH 34	677.5	0.603	75.07	0.757
TC 1718U CH 22	708.5	0.537	106.05	1.069
TC 1219U CH 32	686.9	0.674	84.39	0.851
TC 1819U CH 24	693.2	1.425	90.74	0.915
TC 1120U CH 31	696.4	1.380	93.98	0.947
TC 0421U CH 13	748.5	1.097	145.99	1.472
TC 0521U CH 3	751.2	1.218	148.71	1.499
TC 1021U CH 29	688.1	0.869	85.68	0.864
TC 1421U CH 17	728.9	0.756	126.43	1.274
TC 1621U CH 21	715.8	0.562	113.32	1.142

RESULTS FOR GROUNDED JUNCTION THERMOCOUPLES
FFM SERIES 2 TEST 3 RUN 202 DONE ON 12572 1004

DESCRIPTION	TEMP DEG F	STD DEV	RISE AB INLET T	NORMALIZED TEMP
TC 0118C CH 3	735.4	0.976	132.96	1.340
TC 0618D CH 4	727.3	1.902	124.78	1.258
TC 0618C CH 19	721.8	1.085	119.30	1.203
TC 0219A HEATER 2	730.2	1.658	127.77	1.288
TC 0219B CH 10	719.1	1.040	116.63	1.176
TC 0919A HTR 9 EXT	723.7	0.643	121.20	1.222
TC 0919B CH 29	706.8	0.973	104.33	1.052
TC 0718C CH 5	732.6	0.505	130.09	1.311
TC 0718D CH 6	723.9	0.405	121.42	1.224
TC 0319A HEATER 3	729.0	0.840	126.58	1.276
TC 0319B CH 12	717.3	0.325	114.84	1.158

RESULTS FOR DUCT WALL THERMCCOUPLES
FFM SERIES 2 TEST 3 RUN 202 DONE ON 12572 1004

DESCRIPTION	TEMP DEG F	STD DEV	RISE AB INLET T	NORMALIZED TEMP
TC DOB04 DUCT B	608.9	0.456	6.47	0.065
TC DOE04 DUCT E	609.1	0.358	6.59	0.066
TC DOF04 DUCT F	608.5	0.296	6.06	0.061
TC DOB08 DUCT B	630.2	0.338	27.73	0.280
TC DOD08 DUCT D	620.4	0.177	17.95	0.181
TC DOF08 DUCT F	623.9	0.518	21.39	0.216
TC DOB12 DUCT B	613.9	0.339	11.39	0.115
TC DOE12 DUCT E	636.9	0.588	34.46	0.347
TC DOF12 DUCT F	629.1	0.520	26.68	0.269
TC DOB16 DUCT B	653.0	3.254	50.57	0.510
TC DOD16 DUCT D	640.8	0.617	38.33	0.386
TC DOF16 DUCT F	646.3	0.775	43.87	0.442
TC DOD18 DUCT D	646.0	2.172	43.54	0.439
TC DOE18 DUCT E	656.0	0.523	53.58	0.540
TC DAB18 DUCT AB	652.8	1.171	50.36	0.508
TC DDE18 DUCT DE	652.5	0.667	50.07	0.505
TC DEF18 DUCT EF	653.7	0.625	51.24	0.517
TC DOF18 DUCT F	657.5	0.539	55.02	0.555
TC DFA18 DUCT FA	656.1	0.351	53.68	0.541
TC DOB21 DUCT B	659.0	0.564	56.49	0.569
TC DOD21 DUCT D	660.7	0.573	58.23	0.587
TC DOF21 DUCT F	678.2	0.703	75.69	0.763
TC DOB23 DUCT B	666.6	0.399	64.12	0.646
TC DOD23 DUCT D	673.8	1.526	71.35	0.719
TC DOF23 DUCT F	680.4	0.869	77.98	0.786

RESULTS FOR THERMOCOUPLES IN CHANNEL EXITS
FFM SERIES 2 TEST 3 RUN 202 DONE ON 12572 1004

DESCRIPTION	TEMP DEG F	STD DEV	RISE AB INLET T	NORMALIZED TEMP
TC EC03 EXIT CH 3	733.6	0.874	131.17	1.322
TC EC16 EXIT CH 16	722.4	0.943	119.94	1.209
TC EC17 EXIT CH 17	695.1	0.899	92.65	0.934
TC EC34 EXIT CH 34	689.9	0.756	87.45	0.882
TC EC35 EXIT CH 35	690.3	0.812	87.88	0.886
TC EC36 EXIT CH 36	691.4	0.662	88.96	0.897
TC EC06 EXIT CH 6	728.8	1.053	126.28	1.273
TC EC08 EXIT CH 8	700.8	0.576	98.32	0.991
TC EC27 EXIT CH 27	685.3	0.737	82.85	0.835
TC EA36 EXIT ANN EF	692.6	0.623	90.13	0.909
TC EA27 EXIT ANN BC	688.4	0.448	85.95	0.866
TC EA28 EXIT ANN C	689.9	0.479	87.46	0.882

RESULTS FOR THERMOCOUPLES INSIDE HEATERS
FFM SERIES 2 TEST 3 RUN 202 DONE ON 12572 1004

DESCRIPTION	TEMP DEG F	STD DEV	RISE AB INLET T	NORMALIZED TEMP
TC R0118AB HTR 1 INT	779.4	0.863	176.97	1.784
TC R0219AB HTR 2 INT	770.2	4.836	167.72	1.691
TC R0418AB HTR 4 INT	814.4	3.246	211.95	2.137
TC R0518AB HTR 5 INT	778.9	3.731	176.39	1.778
TC R1218AB HEATER 12	745.9	0.793	143.46	1.446
TC R1318DE HEATER 13	785.4	1.085	182.90	1.844
TC R1418AB HEATER 14	767.2	1.779	164.75	1.661
TC R1618AB HEATER 16	787.8	2.019	185.28	1.868
TC R1718AB HEATER 17	759.7	1.025	157.23	1.585
TC R1817AB HEATER 18	732.5	4.749	130.00	1.310
TC R1918CD HEATER 19	764.3	4.372	161.88	1.632
TC R0118BC HEATER 1	795.7	3.573	193.25	1.948
TC R0118CD HEATER 1	810.1	0.418	207.63	2.093
TC R0118DE HEATER 1	797.8	1.511	195.30	1.969
TC R0219BC HEATER 2	725.4	49.362	122.98	1.240
TC R0418BC HEATER 4	798.6	2.412	196.18	1.978
TC R0418CD HEATER 4	794.6	2.605	192.17	1.937
TC R0418DE HEATER 4	800.7	3.997	198.20	1.998
TC R0518BC HEATER 5	783.5	2.844	181.07	1.825
TC R0518CD HEATER 5	784.7	3.716	182.22	1.837
TC R0718BC HEATER 7	775.3	1.522	172.78	1.742
TC R0718CD HEATER 7	770.3	2.992	167.86	1.692
TC R0718DE HEATER 7	763.2	1.240	160.70	1.620
TC R0818BC HEATER 8	772.0	3.548	169.56	1.709
TC R1718BC HEATER 17	763.2	0.680	160.73	1.620
TC R1918BC HEATER 19	769.0	5.200	166.54	1.679
TC R1918DE HEATER 19	757.2	13.213	154.74	1.560

OPERATING DATA FOR FFM SERIES 2 TEST 3 RUN 203
WHICH WAS DONE ON 12772 1303

DESCRIPTION	MEAN VALUE	STANDARD DEVIATION
HEATER 1 POWER KW	8.54	0.013
HEATER 8,18,19 POWER	23.22	0.080
HTR 12,13,14 POWER	28.59	0.013
HTR 2,7,9,17 POWER	32.96	0.008
HTR 4,5,11,15 POWER	36.72	0.118
HTR 3,6,10,16 POWER	35.21	0.039
TOTAL POWER	163.50	0.200
TEST SECT FLOW, GPM	32.34	0.073
TEST SECT INLET PR	17.82	0.102
TEST SECT OUTLET PR	7.05	0.038
TOTAL FLOW, GPM	65.19	0.389
PUMP OUTLET PR, PSI	17.87	0.054
PUMP SPEED, RPM	907.87	0.532
BLOWER SPEED, RPM	662.85	0.876
AIR FLOW (200 F) CFM	6.23	0.207
TC 313 TEST SECT IN	601.82	0.477
TC 317 TEST SECT OUT	737.51	0.471
TC 300 PUMP OUTLET	601.96	0.386
TC 318 RADIATOR IN	735.59	0.495
TC 334 RADIATOR OUT	596.21	0.274
TC 336 PUMP INLET	602.13	0.372
TC 332 RAD AIR IN	83.64	0.114
TC 331 RAD AIR OUT	186.29	0.277

HEAT BALANCE ON SODIUM FLOWING THROUGH BUNDLE
HEAT SUPPLIED BY DUMMY FUEL RODS = 564294.38 BTU/HR
HEAT ADDED TO SODIUM = 592265.38 BTU/HR
PERCENT HEAT BALANCE = 104.96

RESULTS FOR UNGROUNDED JUNCTION THERMOCOUPLES
FFM SERIES 2 TEST 3 RUN 203 DONE ON 12772 1303

DESCRIPTION	TEMP DEG F	STD DEV	RISE AB INLET T	NORMALIZED TEMP
TC 1504U CH 37	629.2	0.163	27.42	0.212
TC 1706U CH 21	657.1	0.526	55.25	0.427
TC 1807U CH 24	669.4	0.314	67.60	0.523
TC 1108U CH 31	661.9	0.243	60.12	0.455
TC 0409U CH 13	699.2	0.485	97.35	0.753
TC 0509U CH 3	695.2	0.491	93.41	0.723
TC 1009U CH 29	652.6	0.383	50.77	0.393
TC 1409U CH 17	683.3	0.377	81.50	0.630
TC 1609U CH 21	677.1	0.549	75.28	0.582
TC 1914U CH 24	670.3	0.569	68.53	0.530
TC 0815U CH 8	716.3	0.415	114.43	0.885
TC 1316U CH 35	720.1	0.301	118.28	0.915
TC 1516U CH 37	693.8	0.530	91.97	0.711
TC 0817U CH 9	730.6	0.838	128.78	0.996
TC 1217U CH 33	708.2	0.332	106.41	0.823
TC 1318U CH 34	701.9	0.517	100.08	0.774
TC 1718U CH 22	740.9	0.928	139.11	1.076
TC 1219U CH 32	715.1	0.449	113.32	0.877
TC 1819U CH 24	719.3	0.574	117.50	0.909
TC 1120U CH 31	726.2	4.115	124.38	0.962
TC 0421U CH 13	792.9	0.545	191.06	1.478
TC 0521U CH 3	799.4	0.641	197.57	1.528
TC 1021U CH 29	717.4	0.368	115.60	0.894
TC 1421U CH 17	763.9	0.365	162.09	1.254
TC 1621U CH 21	737.9	0.586	136.05	1.052

RESULTS FOR GROUNDED JUNCTION THERMOCOUPLES
FFM SERIES 2 TEST 3 RUN 203 DONE ON 12772 1303

DESCRIPTION	TEMP DEG F	STD DEV	RISE AB INLET T	NORMALIZED TEMP
TC 0118C CH 3	774.5	0.905	172.68	1.336
TC 0618D CH 4	765.6	0.763	163.78	1.267
TC 0618C CH 19	758.0	0.945	156.22	1.208
TC 0219A HEATER 2	767.5	1.369	165.72	1.282
TC 0219B CH 10	752.7	0.915	150.87	1.167
TC 0919A HTR 9 EXT	756.2	1.327	154.42	1.194
TC 0919B CH 29	739.4	0.946	137.59	1.064
TC 0718C CH 5	770.9	2.160	169.05	1.308
TC 0718D CH 6	762.4	0.411	160.55	1.242
TC 0319A HEATER 3	768.6	1.159	166.75	1.290
TC 0319B CH 12	753.8	0.835	151.99	1.176

RESULTS FOR DUCT WALL THERMOCOUPLES
FFM SERIES 2 TEST 3 RUN 203 DONE ON 12772 1303

DESCRIPTION	TEMP DEG F	STD DEV	RISE AB INLET T	NORMALIZED TEMP
TC D0B04 DUCT B	611.5	1.731	9.67	0.075
TC D0E04 DUCT E	613.3	0.431	11.53	0.089
TC D0F04 DUCT F	611.8	0.640	9.93	0.077
TC D0B08 DUCT B	640.0	0.811	38.22	0.296
TC D0D08 DUCT D	628.0	0.659	26.18	0.203
TC D0F08 DUCT F	633.6	0.379	31.80	0.246
TC D0B12 DUCT B	618.5	0.723	16.70	0.129
TC D0E12 DUCT E	650.5	0.272	48.72	0.377
TC D0F12 DUCT F	640.1	0.510	38.28	0.296
TC D0B16 DUCT B	666.7	1.109	64.90	0.502
TC D0D16 DUCT D	657.3	0.626	55.48	0.429
TC D0F16 DUCT F	661.6	0.536	59.81	0.463
TC D0D18 DUCT D	666.1	1.159	64.31	0.497
TC D0E18 DUCT E	677.8	0.672	75.99	0.588
TC DAB18 DUCT AB	669.5	1.327	67.71	0.524
TC DDE18 DUCT DE	673.5	0.382	71.64	0.554
TC DEF18 DUCT EF	667.8	0.481	65.99	0.510
TC D0F18 DUCT F	676.6	0.521	74.79	0.579
TC DFA18 DUCT FA	675.7	0.455	73.92	0.572
TC D0B21 DUCT B	679.3	0.469	77.51	0.600
TC D0D21 DUCT D	684.9	0.328	83.08	0.643
TC D0F21 DUCT F	709.0	1.543	107.14	0.829
TC D0B23 DUCT B	690.4	0.786	88.63	0.686
TC D0D23 DUCT D	699.2	1.026	97.38	0.753
TC D0F23 DUCT F	709.5	0.504	107.73	0.833

RESULTS FOR THERMOCOUPLES IN CHANNEL EXITS
FFM SERIES 2 TEST 3 RUN 203 DONE ON 12772 1303

DESCRIPTION	TEMP DEG F	STD DEV	RISE AB INLET T	NORMALIZED TEMP
TC EC03 EXIT CH 3	775.0	0.491	173.19	1.340
TC EC16 EXIT CH 16	759.1	0.412	157.33	1.217
TC EC17 EXIT CH 17	728.1	0.365	126.33	0.977
TC EC34 EXIT CH 34	720.2	0.187	118.35	0.915
TC EC35 EXIT CH 35	720.5	0.223	118.66	0.918
TC EC36 EXIT CH 36	721.1	0.450	119.32	0.923
TC EC06 EXIT CH 6	767.1	0.631	165.27	1.278
TC EC08 EXIT CH 8	724.3	0.998	122.47	0.947
TC EC27 EXIT CH 27	711.5	0.889	109.64	0.848
TC EA36 EXIT ANN EF	723.8	0.849	122.02	0.944
TC EA27 EXIT ANN BC	714.0	0.775	112.14	0.867
TC EA28 EXIT ANN C	715.9	0.571	114.07	0.882

RESULTS FOR THERMOCOUPLES INSIDE HEATERS
FFM SERIES 2 TEST 3 RUN 203 DONE ON 12772 1303

DESCRIPTION	TEMP DEG F	STD DEV	RISE AB INLET T	NORMALIZED TEMP
TC R0118AB HTR 1 INT	816.0	1.980	214.19	1.657
TC R0219AB HTR 2 INT	805.5	2.968	203.66	1.575
TC R0418AB HTR 4 INT	853.8	1.146	251.94	1.949
TC R0518AB HTR 5 INT	816.9	2.434	215.09	1.664
TC R1218AB HEATER 12	775.0	2.156	173.23	1.340
TC R1318DE HEATER 13	817.9	0.812	216.09	1.671
TC R1418AB HEATER 14	793.6	2.655	191.76	1.483
TC R1618AB HEATER 16	819.4	4.253	217.59	1.683
TC R1718AB HEATER 17	790.3	3.290	188.46	1.458
TC R1817AB HEATER 18	737.2	6.553	135.34	1.047
TC R1918CD HEATER 19	778.6	43.909	176.78	1.367
TC R0118BC HEATER 1	831.9	1.222	230.07	1.780
TC R0118CD HEATER 1	849.9	3.452	248.12	1.919
TC R0118DE HEATER 1	836.8	2.978	234.98	1.818
TC R0219BC HEATER 2	829.0	25.958	227.22	1.758
TC R0418BC HEATER 4	838.5	1.365	236.64	1.830
TC R0418CD HEATER 4	833.5	1.514	231.69	1.792
TC R0418DE HEATER 4	845.2	3.255	243.37	1.882
TC R0518BC HEATER 5	823.6	5.738	221.82	1.716
TC R0518CD HEATER 5	826.8	7.276	225.01	1.740
TC R0718BC HEATER 7	804.7	3.393	202.88	1.569
TC R0718CD HEATER 7	803.3	1.238	201.48	1.558
TC R0718DE HEATER 7	795.0	6.142	193.23	1.495
TC R0818BC HEATER 8	791.9	3.419	190.05	1.470
TC R1718BC HEATER 17	785.6	3.610	183.83	1.422
TC R1918BC HEATER 19	793.6	1.905	191.79	1.484
TC R1918DE HEATER 19	814.1	42.305	212.24	1.642

OPERATING DATA FOR FFM SERIES 2 TEST 4 RUN 101
WHICH WAS DONE ON 20472 1459

DESCRIPTION	MEAN VALUE	STANDARD DEVIATION
HEATER 1 POWER KW	0.27	0.015
HEATER 8,18,19 POWER	0.71	0.048
HTR 12,13,14 POWER	0.85	0.038
HTR 2,7,9,17 POWER	1.15	0.073
HTR 4,5,11,15 POWER	1.18	0.058
HTR 3,6,10,16 POWER	1.01	0.057
TOTAL POWER	4.94	0.241
TEST SECT FLOW, GPM	1.18	0.029
TEST SECT INLET PR	8.62	0.054
TEST SECT OUTLET PR	6.22	0.045
TOTAL FLOW, GPM	6.81	0.153
PUMP OUTLET PR, PSI	8.44	0.043
PUMP SPEED, RPM	149.05	0.753
BLOWER SPEED, RPM	57.90	2.729
AIR FLOW (200 F) CFM	0.99	0.011
TC 313 TEST SECT IN	587.17	0.367
TC 317 TEST SECT OUT	784.06	2.306
TC 300 PUMP OUTLET	572.93	0.132
TC 318 RADIATOR IN	661.31	0.721
TC 334 RADIATOR OUT	522.93	1.396
TC 336 PUMP INLET	573.54	0.398
TC 332 RAD AIR IN	276.30	2.273
TC 331 RAD AIR OUT	261.08	6.124

HEAT BALANCE ON SODIUM FLOWING THROUGH BUNDLE
HEAT SUPPLIED BY DUMMY FUEL RODS = 17655.54 BTU/HR
HEAT ADDED TO SODIUM = 31477.88 BTU/HR
PERCENT HEAT BALANCE = 178.29

RESULTS FOR UNGROUNDED JUNCTION THERMOCOUPLES
FFM SERIES 2 TEST 4 RUN 101 DONE ON 20472 1459

DESCRIPTION	TEMP DEG F	STD DEV	RISE AB INLET T	NORMALIZED TEMP
TC 1504U CH 37	616.3	1.009	29.11	0.264
TC 1706U CH 21	637.5	1.472	50.30	0.455
TC 1807U CH 24	644.8	1.645	57.68	0.522
TC 1108U CH 31	658.9	1.837	71.77	0.650
TC 0409U CH 13	674.8	3.439	87.59	0.793
TC 0509U CH 3	674.4	2.182	87.22	0.790
TC 1009U CH 29	667.3	1.767	80.09	0.725
TC 1409U CH 17	668.2	1.972	81.00	0.733
TC 1609U CH 21	669.0	2.170	81.80	0.741
TC 1914U CH 24	691.3	2.387	104.18	0.943
TC 0815U CH 8	721.5	2.860	134.38	1.217
TC 1316U CH 35	755.3	2.860	168.15	1.523
TC 1516U CH 37	733.4	2.708	146.25	1.324
TC 0817U CH 9	742.6	3.348	155.43	1.407
TC 1217U CH 33	742.5	2.717	155.31	1.406
TC 1318U CH 34	734.8	2.982	147.65	1.337
TC 1718U CH 22	756.0	3.772	168.83	1.529
TC 1219U CH 32	818.0	2.737	230.79	2.090
TC 1819U CH 24	763.0	3.051	175.87	1.593
TC 1120U CH 31	772.8	3.028	185.66	1.681
TC 0421U CH 13	789.4	3.434	202.25	1.831
TC 0521U CH 3	791.7	3.385	204.51	1.852
TC 1021U CH 29	781.9	2.861	194.74	1.763
TC 1421U CH 17	786.9	3.249	199.76	1.809
TC 1621U CH 21	786.7	3.463	199.56	1.807

RESULTS FOR GROUNDED JUNCTION THERMOCOUPLES
FFM SERIES 2 TEST 4 RUN 101 DONE ON 20472 1459

DESCRIPTION	TEMP DEG F	STD DEV	RISE AB INLET T	NORMALIZED TEMP
TC 0118C CH 3	764.1	3.911	176.96	1.602
TC 0618D CH 4	762.3	3.790	175.18	1.586
TC 0618C CH 19	761.1	4.030	173.98	1.575
TC 0219A HEATER 2	769.4	3.328	182.28	1.651
TC 0219B CH 10	768.9	3.506	181.75	1.646
TC 0919A HTR 9 EXT	765.7	2.931	178.54	1.617
TC 0919B CH 29	762.6	3.148	175.43	1.589
TC 0718C CH 5	760.3	4.122	173.11	1.568
TC 0718D CH 6	761.4	3.948	174.20	1.577
TC 0319A HEATER 3	769.2	3.233	181.99	1.648
TC 0319B CH 12	767.9	3.275	180.69	1.636

RESULTS FOR DUCT WALL THERMOCOUPLES
FFM SERIES 2 TEST 4 RUN 101 DONE ON 20472 1459

DESCRIPTION	TEMP DEG F	STD DEV	RISE AB INLET T	NORMALIZED TEMP
TC DOB04 DUCT B	606.8	0.985	19.61	0.178
TC DOE04 DUCT E	610.9	0.858	23.73	0.215
TC DOF04 DUCT F	609.9	0.810	22.72	0.206
TC DOB08 DUCT B	686.0	2.191	98.88	0.895
TC DOD08 DUCT D	650.1	1.559	62.93	0.570
TC DOF08 DUCT F	648.1	1.783	60.89	0.551
TC DOB12 DUCT B	644.5	1.477	57.30	0.519
TC DOE12 DUCT E	687.7	1.800	100.54	0.910
TC DOF12 DUCT F	687.4	2.163	100.22	0.908
TC DOB16 DUCT B	725.3	2.843	138.15	1.251
TC DOD16 DUCT D	725.9	2.322	138.78	1.257
TC DOF16 DUCT F	729.3	2.566	142.15	1.287
TC DOD18 DUCT D	746.7	2.535	159.51	1.444
TC DOE18 DUCT E	749.4	2.426	162.19	1.469
TC DAB18 DUCT AB	745.5	2.426	158.31	1.434
TC DDE18 DUCT DE	748.3	2.486	161.17	1.459
TC DEF18 DUCT EF	750.1	2.439	162.89	1.475
TC DOF18 DUCT F	748.7	2.774	161.55	1.463
TC DFA18 DUCT FA	747.8	2.606	160.64	1.455
TC DOB21 DUCT B	773.9	2.695	186.73	1.691
TC DOD21 DUCT D	776.5	2.525	189.33	1.714
TC DOF21 DUCT F	776.3	2.683	189.16	1.713
TC DOB23 DUCT B	783.3	2.566	196.08	1.776
TC DOD23 DUCT D	782.9	2.634	195.72	1.772
TC DOF23 DUCT F	786.3	2.353	199.13	1.803

RESULTS FOR THERMOCOUPLES IN CHANNEL EXITS
FFM SERIES 2 TEST 4 RUN 101 DONE ON 20472 1459

DESCRIPTION	TEMP DEG F	STD DEV	RISE AB INLET T	NORMALIZED TEMP
TC EC03 EXIT CH 3	785.9	2.923	198.72	1.799
TC EC16 EXIT CH 16	784.8	2.849	197.65	1.790
TC EC17 EXIT CH 17	785.1	2.808	197.96	1.793
TC EC34 EXIT CH 34	785.0	2.622	197.82	1.791
TC EC35 EXIT CH 35	785.1	2.640	197.98	1.793
TC EC36 EXIT CH 36	785.7	2.523	198.57	1.798
TC EC06 EXIT CH 6	784.6	2.991	197.44	1.788
TC EC08 EXIT CH 8	783.6	2.683	196.40	1.778
TC EC27 EXIT CH 27	784.6	2.569	197.45	1.788
TC EA36 EXIT ANN EF	785.5	2.462	198.29	1.796
TC EA27 EXIT ANN BC	783.6	2.567	196.43	1.779
TC EA28 EXIT ANN C	783.8	2.648	196.64	1.781

RESULTS FOR THERMOCOUPLES INSIDE HEATERS
FFM SERIES 2 TEST 4 RUN 101 DONE ON 20472 1459

DESCRIPTION	TEMP DEG F	STD DEV	RISE AB INLET T	NORMALIZED TEMP
TC R0118AB HTR 1 INT	761.0	4.882	173.80	1.574
TC R0219AB HTR 2 INT	770.6	5.711	183.45	1.661
TC R0418AB HTR 4 INT	762.3	6.154	175.10	1.586
TC R0518AB HTR 5 INT	760.8	3.475	173.64	1.572
TC R1218AB HEATER 12	748.2	2.461	161.01	1.458
TC R1318DE HEATER 13	749.2	2.874	161.99	1.467
TC R1418AB HEATER 14	749.5	3.505	162.30	1.470
TC R1618AB HEATER 16	762.4	3.606	175.28	1.587
TC R1718AB HEATER 17	751.6	3.383	164.48	1.489
TC R1817AB HEATER 18	738.8	4.439	151.68	1.374
TC R1918CD HEATER 19	893.8	41.265	306.67	2.777
TC R0118BC HEATER 1	761.1	4.991	173.98	1.575
TC R0118CD HEATER 1	760.8	3.510	173.68	1.573
TC R0118DE HEATER 1	761.3	4.378	174.17	1.577
TC R0219BC HEATER 2	767.3	63.598	180.14	1.631
TC R0418BC HEATER 4	763.1	3.709	175.95	1.593
TC R0418CD HEATER 4	762.3	3.845	175.13	1.586
TC R0418DE HEATER 4	761.0	3.707	173.86	1.574
TC R0518BC HEATER 5	760.1	3.176	172.93	1.566
TC R0518CD HEATER 5	761.3	3.915	174.09	1.576
TC R0718BC HEATER 7	753.1	3.331	165.93	1.503
TC R0718CD HEATER 7	753.4	3.936	166.22	1.505
TC R0718DE HEATER 7	752.8	2.951	165.64	1.500
TC R0818BC HEATER 8	747.0	3.040	159.82	1.447
TC R1718BC HEATER 17	752.8	3.903	165.68	1.500
TC R1918BC HEATER 19	754.0	4.474	166.80	1.510
TC R1918DE HEATER 19	876.4	36.412	289.23	2.619

OPERATING DATA FOR FFM SERIES 2 TEST 4 RUN 102
WHICH WAS DONE ON 20472 1118

DESCRIPTION	MEAN VALUE	STANDARD DEVIATION
HEATER 1 POWER KW	0.69	0.005
HEATER 8,18,19 POWER	1.99	0.014
HTR 12,13,14 POWER	2.04	0.011
HTR 2,7,9,17 POWER	2.75	0.018
HTR 4,5,11,15 POWER	2.84	0.009
HTR 3,6,10,16 POWER	2.59	0.017
TOTAL POWER	12.67	0.054
TEST SECT FLOW, GPM	2.03	0.042
TEST SECT INLET PR	8.69	0.175
TEST SECT OUTLET PR	6.24	0.036
TOTAL FLOW, GPM	7.79	0.256
PUMP OUTLET PR, PSI	8.49	0.052
PUMP SPEED, RPM	149.68	0.589
BLOWER SPEED, RPM	104.58	0.363
AIR FLOW (200 F) CFM	0.99	0.005
TC 313 TEST SECT IN	602.59	0.149
TC 317 TEST SECT OUT	810.79	0.398
TC 300 PUMP OUTLET	598.47	0.242
TC 318 RADIATOR IN	774.93	0.456
TC 334 RADIATOR OUT	595.14	2.545
TC 336 PUMP INLET	597.89	0.358
TC 332 RAD AIR IN	234.91	1.491
TC 331 RAD AIR OUT	276.53	1.222

HEAT BALANCE ON SODIUM FLOWING THROUGH BUNDLE
HEAT SUPPLIED BY DUMMY FUEL RODS = 44053.49 BTU/HR
HEAT ADDED TO SODIUM = 57027.98 BTU/HR
PERCENT HEAT BALANCE = 129.45

RESULTS FOR UNGROUNDED JUNCTION THERMOCOUPLES
FFM SERIES 2 TEST 4 RUN 102 DONE ON 20472 1118

DESCRIPTION	TEMP DEG F	STD DEV	RISE AB INLET T	NORMALIZED TEMP
TC 1504U CH 37	636.8	0.145	34.23	0.213
TC 1706U CH 21	664.5	0.358	61.93	0.385
TC 1807U CH 24	672.6	0.581	69.99	0.435
TC 1108U CH 31	681.5	0.408	78.91	0.491
TC 0409U CH 13	707.6	0.307	105.01	0.653
TC 0509U CH 3	709.6	0.718	107.03	0.665
TC 1009U CH 29	687.7	0.215	85.11	0.529
TC 1409U CH 17	693.2	0.451	90.63	0.564
TC 1609U CH 21	694.4	0.363	91.77	0.571
TC 1914U CH 24	716.3	0.628	113.73	0.707
TC 0815U CH 8	753.6	0.631	151.02	0.939
TC 1316U CH 35	782.3	0.636	179.68	1.117
TC 1516U CH 37	756.7	0.325	154.09	0.958
TC 0817U CH 9	774.5	0.676	171.92	1.069
TC 1217U CH 33	766.3	0.610	163.69	1.018
TC 1318U CH 34	759.0	0.693	156.39	0.972
TC 1718U CH 22	788.5	0.843	185.87	1.156
TC 1219U CH 32	843.4	1.362	240.81	1.497
TC 1819U CH 24	792.7	1.418	190.08	1.182
TC 1120U CH 31	797.2	0.895	194.59	1.210
TC 0421U CH 13	828.3	1.714	225.67	1.403
TC 0521U CH 3	832.7	1.610	230.10	1.431
TC 1021U CH 29	806.6	1.186	203.98	1.268
TC 1421U CH 17	820.1	1.317	217.56	1.353
TC 1621U CH 21	817.9	1.836	215.36	1.339

RESULTS FOR GROUNDED JUNCTION THERMOCOUPLES
FFM SERIES 2 TEST 4 RUN 102 DONE ON 20472 1118

DESCRIPTION	TEMP DEG F	STD DEV	RISE AB INLET T	NORMALIZED TEMP
TC 0118C CH 3	806.5	1.379	203.89	1.268
TC 0618D CH 4	802.8	1.797	200.17	1.245
TC 0618C CH 19	797.8	1.147	195.26	1.214
TC 0219A HEATER 2	807.8	1.638	205.25	1.276
TC 0219B CH 10	804.9	1.836	202.32	1.258
TC 0919A HTR 9 EXT	795.8	1.020	193.23	1.201
TC 0919B CH 29	788.3	1.627	185.75	1.155
TC 0718C CH 5	801.8	1.333	199.16	1.238
TC 0718D CH 6	803.1	1.706	200.51	1.247
TC 0319A HEATER 3	805.4	1.070	202.82	1.261
TC 0319B CH 12	802.2	1.077	199.58	1.241

RESULTS FOR DUCT WALL THERMCCOUPLES
FFM SERIES 2 TEST 4 RUN 102 DONE ON 20472 1118

DESCRIPTION	TEMP DEG F	STD DEV	RISE AB INLET T	NORMALIZED TEMP
TC DOB04 DUCT B	625.7	0.377	23.09	0.144
TC DOE04 DUCT E	630.9	0.318	28.31	0.176
TC DOF04 DUCT F	630.2	0.203	27.65	0.172
TC DOB08 DUCT B	708.2	0.174	105.59	0.657
TC DOD08 DUCT D	668.9	0.666	66.34	0.412
TC DOF08 DUCT F	666.9	0.080	64.35	0.400
TC DOB12 DUCT B	663.0	0.386	60.45	0.376
TC DOE12 DUCT E	705.8	0.120	103.16	0.641
TC DOF12 DUCT F	705.5	0.174	102.94	0.640
TC DOB16 DUCT B	748.6	0.652	145.97	0.908
TC DOD16 DUCT D	744.7	0.300	142.07	0.883
TC DOF16 DUCT F	749.9	0.175	147.35	0.916
TC DOD18 DUCT D	767.5	0.371	164.87	1.025
TC DOE18 DUCT E	772.4	0.215	169.86	1.056
TC DAB18 DUCT AB	767.7	0.215	165.09	1.026
TC DDE18 DUCT DE	769.6	0.372	167.03	1.039
TC DEF18 DUCT EF	773.2	0.411	170.59	1.061
TC DOF18 DUCT F	771.5	0.348	168.91	1.050
TC DFA18 DUCT FA	771.7	0.677	169.07	1.051
TC DOB21 DUCT B	794.5	1.352	191.96	1.194
TC DOD21 DUCT D	800.1	0.954	197.49	1.228
TC DOF21 DUCT F	800.8	0.879	198.23	1.233
TC DOB23 DUCT B	806.3	1.176	203.73	1.267
TC DOD23 DUCT D	810.0	0.933	207.44	1.290
TC DOF23 DUCT F	813.6	1.038	211.03	1.312

RESULTS FOR THERMOCOUPLES IN CHANNEL EXITS
FFM SERIES 2 TEST 4 RUN 102 DONE ON 20472 1118

DESCRIPTION	TEMP DEG F	STD DEV	RISE AB INLET T	NORMALIZED TEMP
TC EC03 EXIT CH 3	820.8	1.467	218.24	1.357
TC EC16 EXIT CH 16	816.2	1.156	213.65	1.328
TC EC17 EXIT CH 17	814.9	1.209	212.36	1.320
TC EC34 EXIT CH 34	813.5	1.091	210.90	1.311
TC EC35 EXIT CH 35	813.6	1.144	211.02	1.312
TC EC36 EXIT CH 36	815.0	1.156	212.40	1.321
TC EC06 EXIT CH 6	818.5	1.466	215.93	1.343
TC EC08 EXIT CH 8	810.0	1.234	207.45	1.290
TC EC27 EXIT CH 27	809.1	0.870	206.53	1.284
TC EA36 EXIT ANN EF	813.8	0.923	211.18	1.313
TC EA27 EXIT ANN BC	808.8	0.825	206.26	1.282
TC EA28 EXIT ANN C	811.1	0.972	208.48	1.296

RESULTS FOR THERMOCOUPLES INSIDE HEATERS
FFM SERIES 2 TEST 4 RUN 102 DONE ON 20472 1118

DESCRIPTION	TEMP DEG F	STD DEV	RISE AB INLET T	NORMALIZED TEMP
TC R0118AB HTR 1 INT	805.7	0.557	203.13	1.263
TC R0219AB HTR 2 INT	811.4	1.572	208.83	1.298
TC R0418AB HTR 4 INT	806.5	3.197	203.90	1.268
TC R0518AB HTR 5 INT	806.2	3.025	203.62	1.266
TC R1218AB HEATER 12	776.6	2.125	173.97	1.082
TC R1318DE HEATER 13	780.0	0.881	177.37	1.103
TC R1418AB HEATER 14	778.8	2.592	176.18	1.095
TC R1618AB HEATER 16	782.7	1.024	180.14	1.120
TC R1718AB HEATER 17	786.9	2.017	184.33	1.146
TC R1817AB HEATER 18	776.5	5.842	173.89	1.081
TC R1918CD HEATER 19	790.5	1.792	187.87	1.168
TC R0118BC HEATER 1	806.1	1.385	203.48	1.265
TC R0118CD HEATER 1	806.3	1.852	203.69	1.266
TC R0118DE HEATER 1	806.4	1.551	203.82	1.267
TC R0219BC HEATER 2	795.9	32.389	193.27	1.202
TC R0418BC HEATER 4	805.9	0.914	203.27	1.264
TC R0418CD HEATER 4	805.3	1.756	202.73	1.261
TC R0418DE HEATER 4	802.6	1.310	200.00	1.244
TC R0518BC HEATER 5	802.8	1.592	200.24	1.245
TC R0518CD HEATER 5	801.6	2.892	199.06	1.238
TC R0718BC HEATER 7	795.5	1.173	192.88	1.199
TC R0718CD HEATER 7	795.0	4.457	192.39	1.196
TC R0718DE HEATER 7	794.4	2.476	191.80	1.193
TC R0818BC HEATER 8	777.8	1.330	175.20	1.089
TC R1718BC HEATER 17	786.6	1.863	184.06	1.144
TC R1918BC HEATER 19	789.2	2.696	186.60	1.160
TC R1918DE HEATER 19	789.5	2.028	186.90	1.162

OPERATING DATA FOR FFM SERIES 2 TEST 4 RUN 103
WHICH WAS DONE ON 20472 949

DESCRIPTION	MEAN VALUE	STANDARD DEVIATION
HEATER 1 POWER KW	0.98	0.004
HEATER 8,18,19 POWER	2.83	0.009
HTR 12,13,14 POWER	2.91	0.009
HTR 2,7,9,17 POWER	3.88	0.011
HTR 4,5,11,15 POWER	4.00	0.023
HTR 3,6,10,16 POWER	3.73	0.020
TOTAL POWER	18.03	0.066
TEST SECT FLOW, GPM	3.08	0.022
TEST SECT INLET PR	8.68	0.134
TEST SECT OUTLET PR	6.26	0.031
TOTAL FLOW, GPM	9.07	0.325
PUMP OUTLET PR, PSI	8.51	0.034
PUMP SPEED, RPM	150.10	0.869
BLOWER SPEED, RPM	81.04	0.385
AIR FLOW (200 F) CFM	1.01	0.008
TC 313 TEST SECT IN	615.80	0.350
TC 317 TEST SECT OUT	791.05	0.420
TC 300 PUMP OUTLET	617.11	0.159
TC 318 RADIATOR IN	787.29	0.438
TC 334 RADIATOR OUT	645.82	1.098
TC 336 PUMP INLET	618.76	0.448
TC 332 RAD AIR IN	261.33	0.355
TC 331 RAD AIR OUT	280.10	1.919

HEAT BALANCE ON SODIUM FLOWING THROUGH BUNDLE
HEAT SUPPLIED BY DUMMY FUEL RODS = 62596.90 BTU/HR
HEAT ADDED TO SODIUM = 72583.63 BTU/HR
PERCENT HEAT BALANCE = 115.95

RESULTS FOR UNGROUNDED JUNCTION THERMOCOUPLES
FFM SERIES 2 TEST 4 RUN 103 DONE ON 20472 949

DESCRIPTION	TEMP DEG F	STD DEV	RISE AB INLET T	NORMALIZED TEMP
TC 1504U CH 37	643.7	0.292	27.91	0.185
TC 1706U CH 21	670.9	0.273	55.06	0.364
TC 1807U CH 24	677.5	0.456	61.66	0.408
TC 1108U CH 31	679.4	0.645	63.61	0.421
TC 0409U CH 13	709.0	0.819	93.18	0.617
TC 0509U CH 3	711.7	0.697	95.87	0.634
TC 1009U CH 29	682.8	0.444	66.97	0.443
TC 1409U CH 17	692.5	0.495	76.67	0.507
TC 1609U CH 21	694.5	0.479	78.68	0.521
TC 1914U CH 24	708.0	0.407	92.22	0.610
TC 0815U CH 8	745.2	0.408	129.44	0.856
TC 1316U CH 35	762.6	0.585	146.82	0.971
TC 1516U CH 37	740.2	0.731	124.37	0.823
TC 0817U CH 9	763.5	0.598	147.67	0.977
TC 1217U CH 33	748.4	0.332	132.63	0.878
TC 1318U CH 34	743.2	0.408	127.40	0.843
TC 1718U CH 22	776.0	0.636	160.16	1.060
TC 1219U CH 32	820.6	0.880	204.84	1.355
TC 1819U CH 24	773.8	1.448	158.02	1.046
TC 1120U CH 31	773.6	0.723	157.85	1.044
TC 0421U CH 13	812.4	1.336	196.56	1.301
TC 0521U CH 3	818.5	1.100	202.73	1.341
TC 1021U CH 29	780.3	0.977	164.51	1.088
TC 1421U CH 17	800.0	1.008	184.23	1.219
TC 1621U CH 21	794.8	1.014	179.05	1.185

RESULTS FOR GROUNDED JUNCTION THERMOCOUPLES
FFM SERIES 2 TEST 4 RUN 103 DONE ON 20472 949

DESCRIPTION	TEMP DEG F	STD DEV	RISE AB INLET T	NORMALIZED TEMP
TC 0118C CH 3	796.7	1.204	180.94	1.197
TC 0618D CH 4	793.4	1.511	177.63	1.175
TC 0618C CH 19	786.5	1.393	170.71	1.130
TC 0219A HEATER 2	795.6	1.556	179.77	1.189
TC 0219B CH 10	792.0	1.352	176.20	1.166
TC 0919A HTR 9 EXT	778.2	1.520	162.39	1.074
TC 0919B CH 29	767.6	1.636	151.81	1.004
TC 0718C CH 5	793.7	1.358	177.86	1.177
TC 0718D CH 6	794.3	1.521	178.55	1.181
TC 0319A HEATER 3	792.8	1.087	177.00	1.171
TC 0319B CH 12	787.2	1.332	171.40	1.134

RESULTS FOR DUCT WALL THERMOCOUPLES
FFM SERIES 2 TEST 4 RUN 103 DONE ON 20472 949

DESCRIPTION	TEMP DEG F	STD DEV	RISE AB INLET T	NORMALIZED TEMP
TC D0B04 DUCT B	634.4	0.253	18.57	0.123
TC D0E04 DUCT E	637.8	0.073	22.03	0.146
TC D0F04 DUCT F	637.3	0.273	21.45	0.142
TC D0B08 DUCT B	699.5	0.367	83.70	0.554
TC D0D08 DUCT D	668.4	0.393	52.60	0.348
TC D0F08 DUCT F	666.5	0.571	50.74	0.336
TC D0B12 DUCT B	661.8	0.516	46.02	0.304
TC D0E12 DUCT E	697.3	0.263	81.48	0.539
TC D0F12 DUCT F	696.5	0.407	80.74	0.534
TC D0B16 DUCT B	734.1	0.408	118.27	0.783
TC D0D16 DUCT D	727.9	0.723	112.15	0.742
TC D0F16 DUCT F	733.4	0.301	117.64	0.778
TC D0D18 DUCT D	746.7	0.466	130.91	0.866
TC D0E18 DUCT E	752.4	0.763	136.61	0.904
TC DAB18 DUCT AB	749.4	0.263	133.63	0.884
TC DDE18 DUCT DE	748.7	0.592	132.90	0.879
TC DEF18 DUCT EF	753.0	0.468	137.22	0.908
TC D0F18 DUCT F	752.3	0.755	136.54	0.903
TC DFA18 DUCT FA	752.6	0.527	136.80	0.905
TC D0B21 DUCT B	767.9	0.978	152.07	1.006
TC D0D21 DUCT D	774.2	1.031	158.41	1.048
TC D0F21 DUCT F	777.4	2.533	161.57	1.069
TC D0B23 DUCT B	778.5	1.006	162.68	1.076
TC D0D23 DUCT D	784.4	0.892	168.59	1.115
TC D0F23 DUCT F	789.6	0.971	173.80	1.150

RESULTS FOR THERMOCOUPLES IN CHANNEL EXITS
FFM SERIES 2 TEST 4 RUN 103 DONE ON 20472 949

DESCRIPTION	TEMP DEG F	STD DEV	RISE AB INLET T	NORMALIZED TEMP
TC EC03 EXIT CH 3	803.4	1.072	187.64	1.242
TC EC16 EXIT CH 16	795.2	1.100	179.36	1.187
TC EC17 EXIT CH 17	791.1	1.104	175.33	1.160
TC EC34 EXIT CH 34	789.9	0.857	174.15	1.152
TC EC35 EXIT CH 35	789.4	0.796	173.63	1.149
TC EC36 EXIT CH 36	791.1	0.918	175.31	1.160
TC EC06 EXIT CH 6	801.3	0.899	185.52	1.227
TC EC08 EXIT CH 8	785.9	0.588	170.11	1.126
TC EC27 EXIT CH 27	785.5	0.585	169.69	1.123
TC EA36 EXIT ANN EF	791.1	0.588	175.29	1.160
TC EA27 EXIT ANN BC	785.9	0.499	170.13	1.126
TC EA28 EXIT ANN C	787.7	0.839	171.86	1.137

RESULTS FOR THERMOCOUPLES INSIDE HEATERS
FFM SERIES 2 TEST 4 RUN 103 DONE ON 20472 949

DESCRIPTION	TEMP DEG F	STD DEV	RISE AB INLET T	NORMALIZED TEMP
TC R0118AB HTR 1 INT	802.4	1.342	186.56	1.234
TC R0219AB HTR 2 INT	800.4	2.602	184.57	1.221
TC R0418AB HTR 4 INT	800.6	1.162	184.83	1.223
TC R0518AB HTR 5 INT	795.2	1.427	179.41	1.187
TC R1218AB HEATER 12	757.3	1.141	141.46	0.936
TC R1318DE HEATER 13	765.3	1.393	149.45	0.989
TC R1418AB HEATER 14	767.6	1.731	151.78	1.004
TC R1618AB HEATER 16	766.9	1.605	151.15	1.000
TC R1718AB HEATER 17	777.7	1.344	161.93	1.071
TC R1817AB HEATER 18	752.1	4.476	136.31	0.902
TC R1918CD HEATER 19	799.6	35.500	183.76	1.216
TC R0118BC HEATER 1	800.9	2.392	185.12	1.225
TC R0118CD HEATER 1	803.4	1.185	187.62	1.241
TC R0118DE HEATER 1	802.9	3.413	187.15	1.238
TC R0219BC HEATER 2	801.5	19.927	185.73	1.229
TC R0418BC HEATER 4	802.1	1.863	186.27	1.232
TC R0418CD HEATER 4	799.8	1.173	183.96	1.217
TC R0418DE HEATER 4	794.9	0.909	179.14	1.185
TC R0518BC HEATER 5	795.7	2.320	179.86	1.190
TC R0518CD HEATER 5	800.2	2.770	184.42	1.220
TC R0718BC HEATER 7	790.6	1.054	174.83	1.157
TC R0718CD HEATER 7	791.2	1.299	175.38	1.160
TC R0718DE HEATER 7	787.3	1.713	171.50	1.135
TC R0818BC HEATER 8	767.5	1.282	151.69	1.004
TC R1718BC HEATER 17	779.5	0.976	163.69	1.083
TC R1918BC HEATER 19	781.6	2.759	165.77	1.097
TC R1918DE HEATER 19	806.9	73.814	191.14	1.265

OPERATING DATA FOR FFM SERIES 2 TEST 4 RUN 104
WHICH WAS DONE ON 20372 1443

DESCRIPTION	MEAN VALUE	STANDARD DEVIATION
HEATER 1 POWER KW	1.62	0.163
HEATER 8,18,19 POWER	4.81	0.532
HTR 12,13,14 POWER	4.61	0.393
HTR 2,7,9,17 POWER	6.34	0.623
HTR 4,5,11,15 POWER	6.53	0.573
HTR 3,6,10,16 POWER	5.97	0.523
TOTAL POWER	29.49	2.808
TEST SECT FLOW, GPM	4.16	0.489
TEST SECT INLET PR	8.73	0.128
TEST SECT OUTLET PR	6.21	0.032
TOTAL FLOW, GPM	10.45	0.458
PUMP OUTLET PR, PSI	7.88	0.047
PUMP SPEED, RPM	151.14	0.909
BLOWER SPEED, RPM	136.54	13.423
AIR FLOW (200 F) CFM	1.01	0.011
TC 313 TEST SECT IN	603.58	11.070
TC 317 TEST SECT OUT	793.95	11.102
TC 300 PUMP OUTLET	604.20	13.142
TC 318 RADIATOR IN	783.77	12.230
TC 334 RADIATOR OUT	615.05	9.889
TC 336 PUMP INLET	609.89	10.799
TC 332 RAD AIR IN	215.11	2.521
TC 331 RAD AIR OUT	304.66	2.478

HEAT BALANCE ON SODIUM FLOWING THROUGH BUNDLE
HEAT SUPPLIED BY DUMMY FUEL RODS = 102040.06 BTU/HR
HEAT ADDED TO SODIUM = 106833.50 BTU/HR
PERCENT HEAT BALANCE = 104.70

RESULTS FOR UNGROUNDED JUNCTION THERMOCOUPLES
FFM SERIES 2 TEST 4 RUN 104 DONE ON 20372 1443

DESCRIPTION	TEMP DEG F	STD DEV	RISE AB INLET T	NORMALIZED TEMP
TC 1504U CH 37	632.5	10.830	28.93	0.159
TC 1706U CH 21	665.6	10.330	62.06	0.341
TC 1807U CH 24	675.0	9.580	71.39	0.393
TC 1108U CH 31	670.5	11.420	66.90	0.368
TC 0409U CH 13	709.3	9.658	105.70	0.581
TC 0509U CH 3	711.3	10.008	107.76	0.593
TC 1009U CH 29	672.8	12.044	69.27	0.381
TC 1409U CH 17	686.5	10.744	82.92	0.456
TC 1609U CH 21	689.1	11.007	85.48	0.470
TC 1914U CH 24	702.2	10.160	98.62	0.542
TC 0815U CH 8	749.1	8.730	145.55	0.800
TC 1316U CH 35	758.6	11.920	155.01	0.853
TC 1516U CH 37	734.0	12.260	130.45	0.717
TC 0817U CH 9	768.3	9.252	164.77	0.906
TC 1217U CH 33	742.9	12.073	139.33	0.766
TC 1318U CH 34	737.8	11.678	134.27	0.738
TC 1718U CH 22	783.6	9.649	179.99	0.990
TC 1219U CH 32	701.1	18.522	97.57	0.537
TC 1819U CH 24	777.9	10.270	174.33	0.959
TC 1120U CH 31	770.2	13.037	166.60	0.916
TC 0421U CH 13	824.7	9.430	221.13	1.216
TC 0521U CH 3	834.4	8.860	230.84	1.270
TC 1021U CH 29	775.5	13.134	171.93	0.946
TC 1421U CH 17	803.9	11.379	200.34	1.102
TC 1621U CH 21	797.5	11.141	193.90	1.066

RESULTS FOR GROUNDED JUNCTION THERMOCOUPLES
FFM SERIES 2 TEST 4 RUN 104 DONE ON 20372 1443

DESCRIPTION	TEMP DEG F	STD DEV	RISE AB INLET T	NORMALIZED TEMP
TC 0118C CH 3	812.0	9.618	208.44	1.146
TC 0618D CH 4	806.3	9.622	202.72	1.115
TC 0618C CH 19	797.4	10.028	193.78	1.066
TC 0219A HEATER 2	807.8	9.143	204.23	1.123
TC 0219B CH 10	802.5	9.343	198.93	1.094
TC 0919A HTR 9 EXT	783.4	11.289	179.83	0.989
TC 0919B CH 29	767.7	12.201	164.16	0.903
TC 0718C CH 5	809.6	8.169	205.99	1.133
TC 0718D CH 6	809.2	8.298	205.62	1.131
TC 0319A HEATER 3	802.1	10.053	198.56	1.092
TC 0319B CH 12	795.4	10.426	191.80	1.055

RESULTS FOR DUCT WALL THERMOCOUPLES
FFM SERIES 2 TEST 4 RUN 104 DONE ON 20372 1443

DESCRIPTION	TEMP DEG F	STD DEV	RISE AB INLET T	NORMALIZED TEMP
TC DOB04 DUCT B	622.7	11.250	19.13	0.105
TC DOE04 DUCT E	625.8	11.270	22.23	0.122
TC DOF04 DUCT F	625.1	11.200	21.53	0.118
TC DOB08 DUCT B	650.6	11.530	47.01	0.259
TC DOD08 DUCT D	656.3	12.173	52.67	0.290
TC DOF08 DUCT F	655.9	11.396	52.28	0.288
TC DOB12 DUCT B	691.3	11.540	87.75	0.483
TC DOE12 DUCT E	686.4	12.200	82.82	0.455
TC DOF12 DUCT F	686.6	11.880	82.98	0.456
TC DOB16 DUCT B	728.9	10.780	125.32	0.689
TC DOD16 DUCT D	717.6	13.262	114.02	0.627
TC DOF16 DUCT F	724.8	12.488	121.20	0.667
TC DOD18 DUCT D	738.2	12.926	134.58	0.740
TC DOE18 DUCT E	744.9	12.904	141.33	0.777
TC DAB18 DUCT AB	743.8	11.311	140.22	0.771
TC DDE18 DUCT DE	739.6	13.214	136.01	0.748
TC DEF18 DUCT EF	745.4	13.009	141.83	0.780
TC DOF18 DUCT F	745.5	12.709	141.96	0.781
TC DFA18 DUCT FA	746.6	12.141	143.06	0.787
TC DOB21 DUCT B	761.3	12.650	157.71	0.867
TC DOD21 DUCT D	768.2	13.318	164.58	0.905
TC DOF21 DUCT F	772.3	13.296	168.67	0.928
TC DOB23 DUCT B	773.3	12.459	169.67	0.933
TC DOD23 DUCT D	779.6	13.448	175.98	0.968
TC DOF23 DUCT F	787.3	12.084	183.74	1.011

RESULTS FOR THERMOCOUPLES IN CHANNEL EXITS
FFM SERIES 2 TEST 4 RUN 104 DONE ON 20372 1443

DESCRIPTION	TEMP DEG F	STD DEV	RISE AB INLET T	NORMALIZED TEMP
TC EC03 EXIT CH 3	813.6	9.940	210.06	1.155
TC EC16 EXIT CH 16	798.9	11.273	195.31	1.074
TC EC17 EXIT CH 17	789.6	12.509	186.07	1.023
TC EC34 EXIT CH 34	788.6	12.784	184.99	1.017
TC EC35 EXIT CH 35	787.4	12.740	183.87	1.011
TC EC36 EXIT CH 36	789.5	12.269	185.93	1.023
TC EC06 EXIT CH 6	813.5	8.867	209.92	1.154
TC EC08 EXIT CH 8	784.5	11.826	180.95	0.995
TC EC27 EXIT CH 27	783.2	12.213	179.60	0.988
TC EA36 EXIT ANN EF	789.2	12.381	185.62	1.021
TC EA27 EXIT ANN BC	783.0	12.343	179.38	0.987
TC EA28 EXIT ANN C	785.3	12.419	181.72	0.999

RESULTS FOR THERMOCOUPLES INSIDE HEATERS
FFM SERIES 2 TEST 4 RUN 104 DONE ON 20372 1443

DESCRIPTION	TEMP DEG F	STD DEV	RISE AB INLET T	NORMALIZED TEMP
TC R0118AB HTR 1 INT	817.8	9.320	214.23	1.178
TC R0219AB HTR 2 INT	819.8	7.282	216.18	1.189
TC R0418AB HTR 4 INT	822.2	10.113	218.64	1.202
TC R0518AB HTR 5 INT	810.9	8.748	207.28	1.140
TC R1218AB HEATER 12	756.5	12.852	152.92	0.841
TC R1318DE HEATER 13	768.5	11.212	164.90	0.907
TC R1418AB HEATER 14	765.6	10.332	162.03	0.891
TC R1618AB HEATER 16	770.0	11.025	166.43	0.915
TC R1718AB HEATER 17	787.7	8.783	184.10	1.012
TC R1817AB HEATER 18	755.8	9.354	152.25	0.837
TC R1918CD HEATER 19	811.2	44.992	207.58	1.142
TC R0118BC HEATER 1	819.5	8.552	215.93	1.188
TC R0118CD HEATER 1	821.0	7.316	217.40	1.196
TC R0118DE HEATER 1	819.9	7.987	216.35	1.190
TC R0219BC HEATER 2	832.5	32.538	228.94	1.259
TC R0418BC HEATER 4	816.5	9.043	212.92	1.171
TC R0418CD HEATER 4	815.0	8.952	211.45	1.163
TC R0418DE HEATER 4	809.8	9.545	206.25	1.134
TC R0518BC HEATER 5	812.3	9.872	208.77	1.148
TC R0518CD HEATER 5	815.2	10.074	211.62	1.164
TC R0718BC HEATER 7	808.6	7.957	204.99	1.127
TC R0718CD HEATER 7	806.9	6.496	203.30	1.118
TC R0718DE HEATER 7	801.8	6.765	198.23	1.090
TC R0818BC HEATER 8	773.2	9.530	169.66	0.933
TC R1718BC HEATER 17	790.0	9.361	186.45	1.025
TC R1918BC HEATER 19	795.4	7.267	191.86	1.055
TC R1918DE HEATER 19	812.6	37.013	208.99	1.149

OPERATING DATA FOR FFM SERIES 2 TEST 4 RUN 105
WHICH WAS DONE ON 20372 1054

DESCRIPTION	MEAN VALUE	STANDARD DEVIATION
HEATER 1 POWER KW	1.71	0.009
HEATER 8,18,19 POWER	5.12	0.031
HTR 12,13,14 POWER	4.83	0.085
HTR 2,7,9,17 POWER	6.70	0.087
HTR 4,5,11,15 POWER	6.86	0.023
HTR 3,6,10,16 POWER	6.28	0.064
TOTAL POWER	31.13	0.147
TEST SECT FLOW, GPM	4.97	0.031
TEST SECT INLET PR	8.77	0.120
TEST SECT OUTLET PR	6.21	0.024
TOTAL FLOW, GPM	10.71	0.165
PUMP OUTLET PR, PSI	7.87	0.048
PUMP SPEED, RPM	151.42	0.593
BLOWER SPEED, RPM	144.40	0.436
AIR FLOW (200 F) CFM	1.02	0.008
TC 313 TEST SECT IN	596.84	0.225
TC 317 TEST SECT OUT	787.20	0.421
TC 300 PUMP OUTLET	596.70	5.443
TC 318 RADIATOR IN	783.94	6.356
TC 334 RADIATOR OUT	620.21	6.330
TC 336 PUMP INLET	603.28	0.159
TC 332 RAD AIR IN	214.57	0.307
TC 331 RAD AIR OUT	306.22	1.223

HEAT BALANCE ON SODIUM FLOWING THROUGH BUNDLE
HEAT SUPPLIED BY DUMMY FUEL RODS = 107572.38 BTU/HR
HEAT ADDED TO SODIUM = 127874.00 BTU/HR
PERCENT HEAT BALANCE = 118.87

RESULTS FOR UNGROUNDED JUNCTION THERMOCOUPLES
FFM SERIES 2 TEST 4 RUN 105 DONE ON 20372 1054

DESCRIPTION	TEMP DEG F	STD DEV	RISE AB INLET T	NORMALIZED TEMP
TC 1504U CH 37	625.8	0.244	28.98	0.181
TC 1706U CH 21	658.6	0.584	61.72	0.385
TC 1807U CH 24	669.6	1.053	72.76	0.454
TC 1108U CH 31	662.6	0.701	65.77	0.411
TC 0409U CH 13	702.3	0.861	105.45	0.658
TC 0509U CH 3	704.5	0.654	107.62	0.672
TC 1009U CH 29	664.4	1.102	67.54	0.422
TC 1409U CH 17	678.6	1.239	81.78	0.511
TC 1609U CH 21	681.3	0.949	84.43	0.527
TC 1914U CH 24	696.9	1.635	100.04	0.625
TC 0815U CH 8	744.3	1.352	147.44	0.921
TC 1316U CH 35	749.7	1.485	152.90	0.955
TC 1516U CH 37	726.0	0.486	129.18	0.807
TC 0817U CH 9	762.9	1.053	166.11	1.037
TC 1217U CH 33	734.1	1.224	137.30	0.857
TC 1318U CH 34	729.7	1.026	132.87	0.830
TC 1718U CH 22	776.7	0.529	179.88	1.123
TC 1219U CH 32	697.3	17.662	100.46	0.627
TC 1819U CH 24	770.8	0.885	173.95	1.086
TC 1120U CH 31	760.9	1.184	164.02	1.024
TC 0421U CH 13	817.6	1.367	220.78	1.379
TC 0521U CH 3	827.9	0.941	231.07	1.443
TC 1021U CH 29	766.5	0.929	169.62	1.059
TC 1421U CH 17	796.1	1.279	199.29	1.244
TC 1621U CH 21	789.1	0.930	192.27	1.201

RESULTS FOR GROUNDED JUNCTION THERMOCOUPLES
FFM SERIES 2 TEST 4 RUN 105 DONE ON 20372 1054

DESCRIPTION	TEMP DEG F	STD DEV	RISE AB INLET T	NORMALIZED TEMP
TC 0118C CH 3	804.7	1.240	207.82	1.298
TC 0618D CH 4	799.2	0.975	202.37	1.264
TC 0618C CH 19	789.9	0.704	193.10	1.206
TC 0219A HEATER 2	801.3	0.794	204.41	1.276
TC 0219B CH 10	795.1	1.582	198.26	1.238
TC 0919A HTR 9 EXT	774.6	1.340	177.79	1.110
TC 0919B CH 29	759.3	0.650	162.41	1.014
TC 0718C CH 5	803.5	0.310	206.71	1.291
TC 0718D CH 6	803.1	0.867	206.28	1.288
TC 0319A HEATER 3	794.8	1.464	197.99	1.236
TC 0319B CH 12	787.9	1.279	191.09	1.193

RESULTS FOR DUCT WALL THERMOCOUPLES
FFM SERIES 2 TEST 4 RUN 105 DONE ON 20372 1054

DESCRIPTION	TEMP DEG F	STD DEV	RISE AB INLET T	NORMALIZED TEMP
TC DOB04 DUCT B	615.7	0.472	18.82	0.118
TC DOE04 DUCT E	618.6	0.403	21.76	0.136
TC DOF04 DUCT F	618.2	0.190	21.34	0.133
TC DOB08 DUCT B	684.4	0.358	87.54	0.547
TC DOD08 DUCT D	648.3	0.348	51.43	0.321
TC DOF08 DUCT F	648.6	0.239	51.74	0.323
TC DOB12 DUCT B	644.0	0.530	47.19	0.295
TC DOE12 DUCT E	678.4	0.724	81.58	0.509
TC DOF12 DUCT F	679.2	0.250	82.38	0.514
TC DOB16 DUCT B	722.6	0.587	125.73	0.785
TC DOD16 DUCT D	708.9	0.881	112.09	0.700
TC DOF16 DUCT F	716.9	0.275	120.04	0.750
TC DOD18 DUCT D	730.2	0.870	133.33	0.833
TC DOE18 DUCT E	736.3	0.772	139.45	0.871
TC DAB18 DUCT AB	737.2	0.818	140.39	0.877
TC DDE18 DUCT DE	730.5	1.028	133.66	0.835
TC DEF18 DUCT EF	736.9	0.395	140.08	0.875
TC DOF18 DUCT F	737.3	0.348	140.42	0.877
TC DFA18 DUCT FA	738.6	0.465	141.72	0.885
TC DOB21 DUCT B	752.5	1.127	155.64	0.972
TC DOD21 DUCT D	759.0	1.066	162.19	1.013
TC DOF21 DUCT F	764.3	0.877	167.42	1.045
TC DOB23 DUCT B	764.9	0.540	168.05	1.049
TC DOD23 DUCT D	770.2	0.807	173.33	1.082
TC DOF23 DUCT F	778.4	1.195	181.55	1.134

RESULTS FOR THERMOCOUPLES IN CHANNEL EXITS
FFM SERIES 2 TEST 4 RUN 105 DONE ON 20372 1054

DESCRIPTION	TEMP DEG F	STD DEV	RISE AB INLET T	NORMALIZED TEMP
TC EC03 EXIT CH 3	806.5	0.930	209.64	1.309
TC EC16 EXIT CH 16	791.2	0.958	194.35	1.214
TC EC17 EXIT CH 17	781.0	0.965	184.17	1.150
TC EC34 EXIT CH 34	779.8	0.745	182.96	1.143
TC EC35 EXIT CH 35	778.5	0.824	181.64	1.134
TC EC36 EXIT CH 36	780.9	0.669	184.04	1.149
TC EC06 EXIT CH 6	806.6	1.031	209.75	1.310
TC EC08 EXIT CH 8	776.6	0.579	179.73	1.122
TC EC27 EXIT CH 27	775.0	0.656	178.20	1.113
TC EA36 EXIT ANN EF	781.0	0.927	184.13	1.150
TC EA27 EXIT ANN BC	774.8	0.341	177.99	1.111
TC EA28 EXIT ANN C	777.3	0.495	180.50	1.127

RESULTS FOR THERMOCOUPLES INSIDE HEATERS
FFM SERIES 2 TEST 4 RUN 105 DONE ON 20372 1054

DESCRIPTION	TEMP DEG F	STD DEV	RISE AB INLET T	NORMALIZED TEMP
TC R0118AB HTR 1 INT	811.6	0.859	214.76	1.341
TC R0219AB HTR 2 INT	813.9	0.899	217.08	1.356
TC R0418AB HTR 4 INT	814.0	1.529	217.20	1.356
TC R0518AB HTR 5 INT	804.7	0.540	207.85	1.298
TC R1218AB HEATER 12	747.3	1.220	150.46	0.940
TC R1318DE HEATER 13	760.6	1.975	163.76	1.023
TC R1418AB HEATER 14	759.1	1.764	162.31	1.014
TC R1618AB HEATER 16	760.8	2.360	164.01	1.024
TC R1718AB HEATER 17	781.3	2.504	184.44	1.152
TC R1817AB HEATER 18	749.7	0.927	152.85	0.954
TC R1918CD HEATER 19	777.8	63.339	180.97	1.130
TC R0118BC HEATER 1	814.2	1.041	217.32	1.357
TC R0118CD HEATER 1	814.2	1.698	217.35	1.357
TC R0118DE HEATER 1	813.8	0.974	217.00	1.355
TC R0219BC HEATER 2	869.2	41.104	272.40	1.701
TC R0418BC HEATER 4	811.1	0.807	214.25	1.338
TC R0418CD HEATER 4	808.7	0.978	211.82	1.323
TC R0418DE HEATER 4	803.3	1.289	206.41	1.289
TC R0518BC HEATER 5	805.6	3.305	208.74	1.304
TC R0518CD HEATER 5	808.9	3.297	212.07	1.324
TC R0718BC HEATER 7	802.9	1.282	206.09	1.287
TC R0718CD HEATER 7	801.5	3.517	204.68	1.278
TC R0718DE HEATER 7	792.9	4.492	196.08	1.224
TC R0818BC HEATER 8	764.7	2.326	167.86	1.048
TC R1718BC HEATER 17	784.2	1.215	187.36	1.170
TC R1918BC HEATER 19	791.0	0.813	194.14	1.212
TC R1918DE HEATER 19	779.1	48.697	182.29	1.138

OPERATING DATA FOR FFM SERIES 2 TEST 4 RUN 201
WHICH WAS DONE ON 30172 1432

DESCRIPTION	MEAN VALUE	STANDARD DEVIATION
HEATER 1 POWER KW	0.54	0.007
HEATER 8,18,19 POWER	1.49	0.018
HTR 12,13,14 POWER	1.58	0.018
HTR 2,7,9,17 POWER	2.11	0.026
HTR 4,5,11,15 POWER	2.20	0.026
HTR 3,6,10,16 POWER	1.96	0.030
TOTAL POWER	9.63	0.107
TEST SECT FLOW, GPM	0.98	0.034
TEST SECT INLET PR	8.49	0.140
TEST SECT OUTLET PR	6.06	0.052
TOTAL FLOW, GPM	7.36	0.271
PUMP OUTLET PR, PSI	7.27	0.022
PUMP SPEED, RPM	145.08	1.184
BLOWER SPEED, RPM	19.42	3.471
AIR FLOW (200 F) CFM	0.98	0.009
TC 313 TEST SECT IN	668.68	0.405
TC 317 TEST SECT OUT	965.62	1.510
TC 300 PUMP OUTLET	669.61	0.500
TC 318 RADIATOR IN	878.99	2.190
TC 334 RADIATOR OUT	721.80	2.698
TC 336 PUMP INLET	673.66	0.642
TC 332 RAD AIR IN	112.80	1.770
TC 331 RAD AIR OUT	197.47	4.786

HEAT BALANCE ON SODIUM FLOWING THROUGH BUNDLE
HEAT SUPPLIED BY DUMMY FUEL RODS = 33740.19 BTU/HR
HEAT ADDED TO SODIUM = 38591.86 BTU/HR
PERCENT HEAT BALANCE = 114.38

RESULTS FOR UNGROUNDED JUNCTION THERMOCOUPLES
FFM SERIES 2 TEST 4 RUN 201 DONE ON 30172 1432

DESCRIPTION	TEMP DEG F	STD DEV	RISE AB INLET T	NORMALIZED TEMP
TC 1504U CH 37	715.9	0.881	47.20	0.182
TC 1706U CH 21	749.0	1.622	80.33	0.309
TC 1807U CH 24	760.8	1.387	92.10	0.355
TC 1108U CH 31	778.7	1.271	109.98	0.424
TC 0409U CH 13	804.4	2.105	135.68	0.523
TC 0509U CH 3	804.6	2.409	135.89	0.523
TC 1009U CH 29	790.5	0.957	121.80	0.469
TC 1409U CH 17	793.7	1.552	125.04	0.482
TC 1609U CH 21	795.9	1.796	127.26	0.490
TC 1914U CH 24	830.8	0.991	162.15	0.625
TC 0815U CH 8	875.9	1.462	207.19	0.798
TC 1316U CH 35	925.0	0.899	256.30	0.987
TC 1516U CH 37	891.6	1.272	222.95	0.859
TC 0817U CH 9	906.2	1.120	237.48	0.915
TC 1217U CH 33	904.8	1.172	236.08	0.909
TC 1318U CH 34	893.9	1.155	225.25	0.868
TC 1718U CH 22	927.8	1.080	259.07	0.998
TC 1219U CH 32	936.1	0.525	267.38	1.030
TC 1819U CH 24	938.2	1.229	269.53	1.038
TC 1120U CH 31	950.1	0.656	281.39	1.084
TC 0421U CH 13	977.6	1.661	308.93	1.190
TC 0521U CH 3	981.1	1.668	312.40	1.203
TC 1021U CH 29	964.4	0.451	295.68	1.139
TC 1421U CH 17	973.1	1.195	304.43	1.173
TC 1621U CH 21	973.8	1.438	305.11	1.175

RESULTS FOR GROUNDED JUNCTION THERMOCOUPLES
FFM SERIES 2 TEST 4 RUN 201 DONE ON 30172 1432

DESCRIPTION	TEMP DEG F	STD DEV	RISE AB INLET T	NORMALIZED TEMP
TC 0118C CH 3	940.8	2.073	272.11	1.048
TC 0618D CH 4	938.8	1.961	270.15	1.041
TC 0618C CH 19	936.3	1.848	267.64	1.031
TC 0219A HEATER 2	947.3	1.891	278.60	1.073
TC 0219B CH 10	946.2	1.961	277.48	1.069
TC 0919A HTR 9 EXT	941.0	1.247	272.31	1.049
TC 0919B CH 29	935.5	1.008	266.78	1.028
TC 0718C CH 5	936.1	1.542	267.38	1.030
TC 0718D CH 6	936.3	2.240	267.57	1.031
TC 0319A HEATER 3	946.6	1.619	277.91	1.070
TC 0319B CH 12	944.8	1.455	276.11	1.064

RESULTS FOR DUCT WALL THERMOCOUPLES
FFM SERIES 2 TEST 4 RUN 201 DONE ON 30172 1432

DESCRIPTION	TEMP DEG F	STD DEV	RISE AB INLET T	NORMALIZED TEMP
TC DOB04 DUCT B	702.1	0.755	33.42	0.129
TC DOE04 DUCT E	707.0	1.108	38.36	0.148
TC DOF04 DUCT F	706.8	0.495	38.12	0.147
TC DOB08 DUCT B	757.2	0.495	88.56	0.341
TC DOD08 DUCT D	766.0	0.827	97.29	0.375
TC DOF08 DUCT F	764.3	0.855	95.60	0.368
TC DOB12 DUCT B	819.5	0.348	150.85	0.581
TC DOE12 DUCT E	822.8	0.557	154.15	0.594
TC DOF12 DUCT F	824.1	0.887	155.38	0.599
TC DOB16 DUCT B	881.3	0.391	212.59	0.819
TC DOD16 DUCT D	880.1	0.535	211.41	0.814
TC DOF16 DUCT F	886.1	0.569	217.41	0.837
TC DOD18 DUCT D	911.6	0.360	242.96	0.936
TC DOE18 DUCT E	915.8	0.741	247.10	0.952
TC DAB18 DUCT AB	912.0	0.606	243.28	0.937
TC DDE18 DUCT DE	913.3	0.332	244.59	0.942
TC DEF18 DUCT EF	917.3	0.269	248.67	0.958
TC DOF18 DUCT F	915.3	0.608	246.60	0.950
TC DFA18 DUCT FA	915.3	0.311	246.67	0.950
TC DOB21 DUCT B	949.3	0.746	280.61	1.081
TC DOD21 DUCT D	958.0	0.433	289.34	1.115
TC DOF21 DUCT F	963.0	0.347	294.30	1.134
TC DOB23 DUCT B	968.4	1.154	299.73	1.155
TC DOD23 DUCT D	969.0	0.441	300.36	1.157
TC DOF23 DUCT F	974.1	0.855	305.44	1.177

RESULTS FOR THERMOCOUPLES IN CHANNEL EXITS
FFM SERIES 2 TEST 4 RUN 201 DONE ON 30172 1432

DESCRIPTION	TEMP DEG F	STD DEV	RISE AB INLET T	NORMALIZED TEMP
TC EC03 EXIT CH 3	973.3	0.810	304.66	1.174
TC EC16 EXIT CH 16	972.1	0.331	303.38	1.169
TC EC17 EXIT CH 17	972.3	0.370	303.66	1.170
TC EC34 EXIT CH 34	972.1	0.652	303.43	1.169
TC EC35 EXIT CH 35	972.8	0.501	304.11	1.171
TC EC36 EXIT CH 36	973.5	0.710	304.81	1.174
TC EC06 EXIT CH 6	972.3	0.718	303.63	1.170
TC EC08 EXIT CH 8	969.5	0.446	300.87	1.159
TC EC27 EXIT CH 27	969.3	0.294	300.61	1.158
TC EA36 EXIT ANN EF	972.4	0.565	303.73	1.170
TC EA27 EXIT ANN BC	969.1	0.332	300.43	1.157
TC EA28 EXIT ANN C	969.5	0.182	300.83	1.159

RESULTS FOR THERMOCOUPLES INSIDE HEATERS
FFM SERIES 2 TEST 4 RUN 201 DONE ON 30172 1432

DESCRIPTION	TEMP DEG F	STD DEV	RISE AB INLET T	NORMALIZED TEMP
TC R0118AB HTR 1 INT	934.8	3.406	266.07	1.025
TC R0219AB HTR 2 INT	965.3	5.580	296.66	1.143
TC R0418AB HTR 4 INT	939.2	2.254	270.52	1.042
TC R0518AB HTR 5 INT	935.9	5.451	267.23	1.029
TC R1218AB HEATER 12	914.8	2.722	246.08	0.948
TC R1318DE HEATER 13	917.7	1.172	249.05	0.959
TC R1418AB HEATER 14	919.6	0.988	250.88	0.966
TC R1618AB HEATER 16	923.3	1.269	254.66	0.981
TC R1718AB HEATER 17	921.9	1.592	253.19	0.975
TC R1817AB HEATER 18	903.6	8.185	234.89	0.905
TC R0118BC HEATER 1	938.6	2.913	269.90	1.040
TC R0118CD HEATER 1	938.0	3.417	269.34	1.037
TC R0118DE HEATER 1	939.3	2.877	270.59	1.042
TC R0219BC HEATER 2	941.1	54.573	272.39	1.049
TC R0418BC HEATER 4	939.5	3.574	270.80	1.043
TC R0418CD HEATER 4	938.4	3.010	269.73	1.039
TC R0418DE HEATER 4	935.1	3.469	266.41	1.026
TC R0518BC HEATER 5	935.5	5.422	266.79	1.028
TC R0518CD HEATER 5	937.8	1.989	269.13	1.037
TC R0718BC HEATER 7	930.1	2.202	261.44	1.007
TC R0718CD HEATER 7	925.3	4.208	256.60	0.988
TC R0718DE HEATER 7	924.4	1.369	255.73	0.985
TC R0818BC HEATER 8	914.1	2.374	245.40	0.945
TC R1718BC HEATER 17	924.1	2.716	255.43	0.984
TC R1918DE HEATER 19	925.2	1.953	256.56	0.988

OPERATING DATA FOR FFM SERIES 2 TEST 4 RUN 202
WHICH WAS DONE ON 30172 1324

DESCRIPTION	MEAN VALUE	STANDARD DEVIATION
HEATER 1 POWER KW	1.22	0.010
HEATER 8,18,19 POWER	3.50	0.023
HTR 12,13,14 POWER	3.56	0.030
HTR 2,7,9,17 POWER	4.78	0.026
HTR 4,5,11,15 POWER	4.86	0.027
HTR 3,6,10,16 POWER	4.57	0.022
TOTAL POWER	22.15	0.147
TEST SECT FLOW, GPM	2.12	0.030
TEST SECT INLET PR	8.60	0.098
TEST SECT OUTLET PR	6.06	0.051
TOTAL FLOW, GPM	8.66	0.254
PUMP OUTLET PR, PSI	7.32	0.029
PUMP SPEED, RPM	144.34	0.921
BLOWER SPEED, RPM	21.41	3.539
AIR FLOW (200 F) CFM	0.99	0.016
TC 313 TEST SECT IN	624.88	0.159
TC 317 TEST SECT OUT	902.81	0.298
TC 300 PUMP OUTLET	633.77	0.586
TC 318 RADIATOR IN	897.62	0.146
TC 334 RADIATOR OUT	701.51	12.837
TC 336 PUMP INLET	639.53	0.956
TC 332 RAD AIR IN	121.28	4.344
TC 331 RAD AIR OUT	266.57	4.629

HEAT BALANCE ON SODIUM FLOWING THROUGH BUNDLE
HEAT SUPPLIED BY DUMMY FUEL RODS = 76803.31 BTU/HR
HEAT ADDED TO SODIUM = 79033.94 BTU/HR
PERCENT HEAT BALANCE = 102.90

RESULTS FOR UNGROUNDED JUNCTION THERMOCOUPLES
FFM SERIES 2 TEST 4 RUN 202 DONE ON 30172 1324

DESCRIPTION	TEMP DEG F	STD DEV	RISE AB INLET T	NORMALIZED TEMP
TC 1504U CH 37	670.1	0.350	45.21	0.167
TC 1706U CH 21	711.0	0.520	86.08	0.319
TC 1807U CH 24	720.6	0.480	95.75	0.355
TC 1108U CH 31	727.3	0.280	102.45	0.379
TC 0409U CH 13	769.1	0.125	144.25	0.534
TC 0509U CH 3	772.3	0.543	147.45	0.546
TC 1009U CH 29	734.1	0.182	109.25	0.405
TC 1409U CH 17	746.1	0.221	121.19	0.449
TC 1609U CH 21	750.3	0.391	125.41	0.464
TC 1914U CH 24	773.3	0.244	148.41	0.549
TC 0815U CH 8	826.6	0.569	201.75	0.747
TC 1316U CH 35	860.4	0.640	235.55	0.872
TC 1516U CH 37	826.6	0.567	201.77	0.747
TC 0817U CH 9	853.0	0.882	228.11	0.845
TC 1217U CH 33	837.9	0.662	213.05	0.789
TC 1318U CH 34	828.9	0.749	204.03	0.755
TC 1718U CH 22	876.0	0.605	251.15	0.930
TC 1219U CH 32	866.2	0.845	241.36	0.894
TC 1819U CH 24	877.1	0.755	252.18	0.934
TC 1120U CH 31	878.1	0.551	253.20	0.937
TC 0421U CH 13	927.6	0.803	302.74	1.121
TC 0521U CH 3	936.6	0.723	311.72	1.154
TC 1021U CH 29	889.0	0.911	264.11	0.978
TC 1421U CH 17	912.8	0.661	287.96	1.066
TC 1621U CH 21	908.6	0.823	283.72	1.050

RESULTS FOR GROUNDED JUNCTION THERMOCOUPLES
FFM SERIES 2 TEST 4 RUN 202 DONE ON 30172 1324

DESCRIPTION	TEMP DEG F	STD DEV	RISE AB INLET T	NORMALIZED TEMP
TC 0118C CH 3	903.6	1.294	278.72	1.032
TC 0618D CH 4	898.9	0.988	274.04	1.015
TC 0618C CH 19	891.5	0.912	266.58	0.987
TC 0219A HEATER 2	900.8	0.823	275.96	1.022
TC 0219B CH 10	895.7	0.685	270.86	1.003
TC 0919A HTR 9 EXT	881.4	0.807	256.48	0.950
TC 0919B CH 29	868.5	0.763	243.64	0.902
TC 0718C CH 5	897.2	0.827	272.34	1.008
TC 0718D CH 6	898.1	0.685	273.20	1.012
TC 0319A HEATER 3	898.0	0.823	273.10	1.011
TC 0319B CH 12	892.5	0.823	267.64	0.991

RESULTS FOR DUCT WALL THERMOCOUPLES
FFM SERIES 2 TEST 4 RUN 202 DONE ON 30172 1324

DESCRIPTION	TEMP DEG F	STD DEV	RISE AB INLET T	NORMALIZED TEMP
TC DOB04 DUCT B	655.3	0.442	30.47	0.113
TC DOE04 DUCT E	661.1	0.170	36.25	0.134
TC DOF04 DUCT F	660.7	0.170	35.85	0.133
TC DOB08 DUCT B	700.1	0.114	75.19	0.278
TC DOD08 DUCT D	710.7	0.506	85.78	0.318
TC DOF08 DUCT F	709.0	0.207	84.16	0.312
TC DOB12 DUCT B	757.9	0.263	133.01	0.492
TC DOE12 DUCT E	759.0	0.311	134.17	0.497
TC DOF12 DUCT F	758.2	0.325	133.36	0.494
TC DOB16 DUCT B	815.2	0.224	190.29	0.705
TC DOD16 DUCT D	808.8	0.433	183.89	0.681
TC DOF16 DUCT F	817.3	0.439	192.45	0.713
TC DOD18 DUCT D	838.4	0.418	213.55	0.791
TC DOE18 DUCT E	846.6	0.426	221.72	0.821
TC DAB18 DUCT AB	841.6	0.355	216.71	0.802
TC DDE18 DUCT DE	840.0	0.548	215.09	0.796
TC DEF18 DUCT EF	847.3	0.553	222.42	0.824
TC DOF18 DUCT F	846.6	0.554	221.69	0.821
TC DFA18 DUCT FA	847.1	0.432	222.25	0.823
TC DOB21 DUCT B	868.7	0.970	243.81	0.903
TC DOD21 DUCT D	882.5	0.851	257.62	0.954
TC DOF21 DUCT F	892.3	0.636	267.46	0.990
TC DOB23 DUCT B	889.4	0.708	264.56	0.980
TC DOD23 DUCT D	896.6	0.917	271.76	1.006
TC DOF23 DUCT F	904.6	0.941	279.74	1.036

RESULTS FOR THERMOCOUPLES IN CHANNEL EXITS
FFM SERIES 2 TEST 4 RUN 202 DONE ON 30172 1324

DESCRIPTION	TEMP DEG F	STD DEV	RISE AB INLET T	NORMALIZED TEMP
TC EC03 EXIT CH 3	918.1	0.704	293.18	1.086
TC EC16 EXIT CH 16	909.7	0.755	284.78	1.054
TC EC17 EXIT CH 17	905.6	0.773	280.72	1.039
TC EC34 EXIT CH 34	904.6	0.806	279.71	1.036
TC EC35 EXIT CH 35	904.7	0.877	279.85	1.036
TC EC36 EXIT CH 36	905.6	0.735	280.71	1.039
TC EC06 EXIT CH 6	913.7	0.867	288.86	1.070
TC EC08 EXIT CH 8	895.9	0.818	271.04	1.004
TC EC27 EXIT CH 27	894.5	0.639	269.60	0.998
TC EA36 EXIT ANN EF	903.7	0.856	278.80	1.032
TC EA27 EXIT ANN BC	894.9	1.011	270.03	1.000
TC EA28 EXIT ANN C	896.8	1.031	271.88	1.007

RESULTS FOR THERMOCOUPLES INSIDE HEATERS
FFM SERIES 2 TEST 4 RUN 202 DONE ON 30172 1324

DESCRIPTION	TEMP DEG F	STD DEV	RISE AB INLET T	NORMALIZED TEMP
TC R0118AB HTR 1 INT	905.3	0.460	280.38	1.038
TC R0219AB HTR 2 INT	912.3	7.749	287.47	1.064
TC R0418AB HTR 4 INT	910.4	3.750	285.55	1.057
TC R0518AB HTR 5 INT	904.1	2.204	279.23	1.034
TC R1218AB HEATER 12	851.4	1.547	226.48	0.839
TC R1318DE HEATER 13	861.7	1.080	236.85	0.877
TC R1418AB HEATER 14	861.5	0.650	236.60	0.876
TC R1618AB HEATER 16	866.2	0.608	241.31	0.893
TC R1718AB HEATER 17	875.4	1.687	250.55	0.928
TC R1817AB HEATER 18	845.6	2.791	220.71	0.817
TC R0118BC HEATER 1	904.3	3.229	279.44	1.035
TC R0118CD HEATER 1	906.0	1.618	281.11	1.041
TC R0118DE HEATER 1	905.4	1.512	280.57	1.039
TC R0219BC HEATER 2	907.4	18.462	282.52	1.046
TC R0418BC HEATER 4	903.6	1.446	278.72	1.032
TC R0418CD HEATER 4	901.8	1.455	276.87	1.025
TC R0418DE HEATER 4	896.6	1.305	271.73	1.006
TC R0518BC HEATER 5	898.5	1.562	273.62	1.013
TC R0518CD HEATER 5	900.1	2.433	275.24	1.019
TC R0718BC HEATER 7	890.0	0.962	265.17	0.982
TC R0718CD HEATER 7	889.0	2.137	264.13	0.978
TC R0718DE HEATER 7	884.1	2.251	259.20	0.960
TC R0818BC HEATER 8	857.5	1.002	232.60	0.861
TC R1718BC HEATER 17	876.3	2.224	251.42	0.931
TC R1918DE HEATER 19	875.9	10.088	250.98	0.929

OPERATING DATA FOR FFM SERIES 2 TEST 4 RUN 203
WHICH WAS DONE ON 22972 1423

DESCRIPTION	MEAN VALUE	STANDARD DEVIATION
HEATER 1 POWER KW	1.93	0.009
HEATER 8,18,19 POWER	5.63	0.030
HTR 12,13,14 POWER	5.64	0.030
HTR 2,7,9,17 POWER	7.57	0.039
HTR 4,5,11,15 POWER	7.76	0.018
HTR 3,6,10,16 POWER	7.35	0.030
TOTAL POWER	35.51	0.182
TEST SECT FLOW, GPM	2.96	0.037
TEST SECT INLET PR	8.61	0.039
TEST SECT OUTLET PR	6.08	0.042
TOTAL FLOW, GPM	9.23	0.250
PUMP OUTLET PR, PSI	7.24	0.082
PUMP SPEED, RPM	152.22	0.716
BLOWER SPEED, RPM	115.94	0.251
AIR FLOW (200 F) CFM	1.03	0.013
TC 313 TEST SECT IN	611.16	0.253
TC 317 TEST SECT OUT	925.51	0.221
TC 300 PUMP OUTLET	612.99	0.102
TC 318 RADIATOR IN	920.71	0.316
TC 334 RADIATOR OUT	618.38	1.769
TC 336 PUMP INLET	614.36	0.390
TC 332 RAD AIR IN	98.78	0.306
TC 331 RAD AIR OUT	232.44	1.191

HEAT BALANCE ON SODIUM FLOWING THROUGH BUNDLE
HEAT SUPPLIED BY DUMMY FUEL RODS = 122530.06 BTU/HR
HEAT ADDED TO SODIUM = 125275.69 BTU/HR
PERCENT HEAT BALANCE = 102.24

RESULTS FOR UNGROUNDED JUNCTION THERMOCOUPLES
FFM SERIES 2 TEST 4 RUN 203 DONE ON 22972 1423

DESCRIPTION	TEMP DEG F	STD DEV	RISE AB INLET T	NORMALIZED TEMP
TC 1504U CH 37	661.7	0.154	50.57	0.164
TC 1706U CH 21	711.9	0.154	100.75	0.328
TC 1807U CH 24	724.4	0.213	113.28	0.368
TC 1108U CH 31	725.6	0.316	114.45	0.372
TC 0409U CH 13	781.8	0.542	170.69	0.555
TC 0509U CH 3	785.1	0.502	173.98	0.566
TC 1009U CH 29	731.7	0.213	120.58	0.392
TC 1409U CH 17	748.8	0.581	137.68	0.448
TC 1609U CH 21	754.6	0.520	143.49	0.467
TC 1914U CH 24	776.7	0.268	165.58	0.539
TC 0815U CH 8	846.7	0.733	235.55	0.766
TC 1316U CH 35	873.3	0.707	262.19	0.853
TC 1516U CH 37	834.1	0.427	222.97	0.725
TC 0817U CH 9	877.1	0.888	265.90	0.865
TC 1217U CH 33	847.8	0.502	236.60	0.770
TC 1318U CH 34	838.2	0.427	227.01	0.738
TC 1718U CH 22	901.7	0.537	290.56	0.945
TC 1219U CH 32	876.7	0.110	265.56	0.864
TC 1819U CH 24	895.9	0.395	284.76	0.926
TC 1120U CH 31	891.3	0.794	280.17	0.911
TC 0421U CH 13	962.6	0.599	351.41	1.143
TC 0521U CH 3	977.4	0.513	366.26	1.191
TC 1021U CH 29	901.6	0.477	290.49	0.945
TC 1421U CH 17	939.6	0.171	328.42	1.068
TC 1621U CH 21	929.2	0.352	318.06	1.034

RESULTS FOR GROUNDED JUNCTION THERMOCOUPLES
FFM SERIES 2 TEST 4 RUN 203 DONE ON 22972 1423

DESCRIPTION	TEMP DEG F	STD DEV	RISE AB INLET T	NORMALIZED TEMP
TC 0118C CH 3	940.3	0.690	329.12	1.070
TC 0618D CH 4	934.4	0.366	323.21	1.051
TC 0618C CH 19	922.7	0.403	311.58	1.013
TC 0219A HEATER 2	935.5	0.578	324.39	1.055
TC 0219B CH 10	929.4	0.673	318.23	1.035
TC 0919A HTR 9 EXT	903.6	0.557	292.42	0.951
TC 0919B CH 29	885.1	1.538	273.99	0.891
TC 0718C CH 5	934.9	0.250	323.75	1.053
TC 0718D CH 6	935.6	0.285	324.46	1.055
TC 0319A HEATER 3	928.8	0.434	317.64	1.033
TC 0319B CH 12	920.8	1.073	309.59	1.007

RESULTS FOR DUCT WALL THERMOCOUPLES
FFM SERIES 2 TEST 4 RUN 203 DONE ON 22972 1423

DESCRIPTION	TEMP DEG F	STD DEV	RISE AB INLET T	NORMALIZED TEMP
TC D0B04 DUCT B	645.7	0.278	34.55	0.112
TC D0E04 DUCT E	652.0	0.239	40.80	0.133
TC D0F04 DUCT F	651.5	0.048	40.33	0.131
TC D0B08 DUCT B	693.7	0.263	82.57	0.269
TC D0D08 DUCT D	704.7	0.307	93.53	0.304
TC D0F08 DUCT F	704.0	0.185	92.89	0.302
TC D0B12 DUCT B	758.1	0.296	146.93	0.478
TC D0E12 DUCT E	756.9	0.512	145.73	0.474
TC D0F12 DUCT F	756.3	0.520	145.13	0.472
TC D0B16 DUCT B	822.9	0.562	211.77	0.689
TC D0D16 DUCT D	810.8	0.507	199.62	0.649
TC D0F16 DUCT F	821.8	0.222	210.60	0.685
TC D0D18 DUCT D	844.2	0.742	233.05	0.758
TC D0E18 DUCT E	854.7	0.454	243.57	0.792
TC DAB18 DUCT AB	849.1	0.448	237.91	0.774
TC DDE18 DUCT DE	846.1	0.377	234.99	0.764
TC DEF18 DUCT EF	855.5	0.415	244.34	0.795
TC D0F18 DUCT F	855.2	0.312	244.07	0.794
TC DFA18 DUCT FA	856.4	0.320	245.24	0.798
TC D0B21 DUCT B	875.4	0.256	264.28	0.860
TC D0D21 DUCT D	893.0	0.512	281.89	0.917
TC D0F21 DUCT F	905.9	0.174	294.71	0.959
TC D0B23 DUCT B	898.8	0.149	287.63	0.936
TC D0D23 DUCT D	910.3	0.166	299.13	0.973
TC D0F23 DUCT F	921.3	0.443	310.18	1.009

RESULTS FOR THERMOCOUPLES IN CHANNEL EXITS
FFM SERIES 2 TEST 4 RUN 203 DONE ON 22972 1423

DESCRIPTION	TEMP DEG F	STD DEV	RISE AB INLET T	NORMALIZED TEMP
TC EC03 EXIT CH 3	950.0	0.256	338.88	1.102
TC EC16 EXIT CH 16	934.3	0.213	323.18	1.051
TC EC17 EXIT CH 17	925.8	0.268	314.60	1.023
TC EC34 EXIT CH 34	923.2	0.312	312.06	1.015
TC EC35 EXIT CH 35	922.8	0.132	311.60	1.013
TC EC36 EXIT CH 36	924.6	0.266	313.42	1.019
TC EC06 EXIT CH 6	945.6	0.633	334.41	1.088
TC EC08 EXIT CH 8	912.9	1.094	301.70	0.981
TC EC27 EXIT CH 27	911.6	1.346	300.46	0.977
TC EA36 EXIT ANN EF	923.8	0.711	312.62	1.017
TC EA27 EXIT ANN BC	912.4	1.156	301.24	0.980
TC EA28 EXIT ANN C	916.5	1.141	305.33	0.993

RESULTS FOR THERMOCOUPLES INSIDE HEATERS
FFM SERIES 2 TEST 4 RUN 203 DONE ON 22972 1423

DESCRIPTION	TEMP DEG F	STD DEV	RISE AB INLET T	NORMALIZED TEMP
TC R0118AB HTR 1 INT	946.5	0.549	335.32	1.091
TC R0219AB HTR 2 INT	944.7	13.409	333.56	1.085
TC R0418AB HTR 4 INT	942.1	6.422	330.98	1.076
TC R0518AB HTR 5 INT	938.6	1.226	327.46	1.065
TC R1218AB HEATER 12	863.8	0.297	252.60	0.822
TC R1318DE HEATER 13	880.3	0.861	269.11	0.875
TC R1418AB HEATER 14	878.7	1.062	267.50	0.870
TC R1618AB HEATER 16	885.5	3.628	274.38	0.892
TC R1718AB HEATER 17	902.5	1.156	291.30	0.947
TC R1817AB HEATER 18	858.4	4.054	247.21	0.804
TC R1918CD HEATER 19	614.3	0.233	3.19	0.010
TC R0118BC HEATER 1	948.3	2.665	337.18	1.097
TC R0118CD HEATER 1	950.1	0.816	338.92	1.102
TC R0118DE HEATER 1	948.8	1.591	337.68	1.098
TC R0219BC HEATER 2	939.9	10.481	328.71	1.069
TC R0418BC HEATER 4	944.1	1.087	332.91	1.083
TC R0418CD HEATER 4	942.8	1.571	331.65	1.079
TC R0418DE HEATER 4	932.1	1.197	320.92	1.044
TC R0518BC HEATER 5	939.6	2.631	328.44	1.068
TC R0518CD HEATER 5	947.1	1.830	335.94	1.093
TC R0718BC HEATER 7	932.2	1.387	321.06	1.044
TC R0718CD HEATER 7	931.3	1.574	320.10	1.041
TC R0718DE HEATER 7	925.1	1.703	313.95	1.021
TC R0818BC HEATER 8	883.2	1.499	272.00	0.885
TC R1718BC HEATER 17	907.1	1.348	295.93	0.962
TC R1918BC HEATER 19	614.5	0.126	3.34	0.011
TC R1918DE HEATER 19	911.0	5.748	299.83	0.975

OPERATING DATA FOR FFM SERIES 2 TEST 4 RUN 204
WHICH WAS DONE ON 22872 1602

DESCRIPTION	MEAN VALUE	STANDARD DEVIATION
HEATER 1 POWER KW	2.76	0.007
HEATER 8,18,19 POWER	8.02	0.015
HTR 12,13,14 POWER	8.00	0.012
HTR 2,7,9,17 POWER	10.77	0.013
HTR 4,5,11,15 POWER	10.93	0.025
HTR 3,6,10,16 POWER	10.44	0.021
TOTAL POWER	50.51	0.090
TEST SECT FLOW, GPM	3.73	0.033
TEST SECT INLET PR	8.68	0.117
TEST SECT OUTLET PR	6.09	0.033
TOTAL FLOW, GPM	8.29	0.141
PUMP OUTLET PR, PSI	7.34	0.036
PUMP SPEED, RPM	102.02	1.146
BLOWER SPEED, RPM	177.59	0.688
AIR FLOW (200 F) CFM	1.11	0.014
TC 313 TEST SECT IN	600.37	0.450
TC 317 TEST SECT OUT	952.36	0.374
TC 300 PUMP OUTLET	594.39	0.201
TC 318 RADIATOR IN	951.11	0.527
TC 334 RADIATOR OUT	589.66	0.553
TC 336 PUMP INLET	590.37	0.623
TC 332 RAD AIR IN	96.86	0.385
TC 331 RAD AIR OUT	248.97	0.264

HEAT BALANCE ON SODIUM FLOWING THROUGH BUNDLE
HEAT SUPPLIED BY DUMMY FUEL RODS = 173891.69 BTU/HR
HEAT ADDED TO SODIUM = 177280.81 BTU/HR
PERCENT HEAT BALANCE = 101.95

RESULTS FOR UNGROUNDED JUNCTION THERMOCOUPLES
FFM SERIES 2 TEST 4 RUN 204 DONE ON 22872 1602

DESCRIPTION	TEMP DEG F	STD DEV	RISE AB INLET T	NORMALIZED TEMP
TC 1504U CH 37	655.3	0.607	54.92	0.159
TC 1706U CH 21	714.1	0.673	113.76	0.329
TC 1807U CH 24	730.0	0.585	129.64	0.375
TC 1108U CH 31	724.6	0.540	124.27	0.360
TC 0409U CH 13	793.8	0.478	193.39	0.560
TC 0509U CH 3	795.9	0.728	195.55	0.566
TC 1009U CH 29	730.8	0.499	130.42	0.378
TC 1409U CH 17	753.5	0.711	153.10	0.443
TC 1609U CH 21	757.6	0.570	157.26	0.455
TC 1914U CH 24	782.7	0.511	182.37	0.528
TC 0815U CH 8	866.0	0.563	265.59	0.769
TC 1316U CH 35	889.8	0.458	289.43	0.838
TC 1516U CH 37	844.3	0.423	243.98	0.707
TC 0817U CH 9	901.4	0.546	301.05	0.872
TC 1217U CH 33	858.3	0.322	257.96	0.747
TC 1318U CH 34	848.1	0.462	247.69	0.717
TC 1718U CH 22	927.3	0.528	326.96	0.947
TC 1219U CH 32	889.9	0.620	289.53	0.839
TC 1819U CH 24	916.9	0.723	316.49	0.917
TC 1120U CH 31	906.9	0.863	306.56	0.888
TC 0421U CH 13	999.6	0.927	399.22	1.156
TC 0521U CH 3	1019.1	1.063	418.71	1.213
TC 1021U CH 29	918.5	0.848	318.10	0.921
TC 1421U CH 17	967.5	0.985	367.11	1.063
TC 1621U CH 21	952.3	0.888	351.92	1.019

RESULTS FOR GROUNDED JUNCTION THERMOCOUPLES
FFM SERIES 2 TEST 4 RUN 204 DONE ON 22872 1602

DESCRIPTION	TEMP DEG F	STD DEV	RISE AB INLET T	NORMALIZED TEMP
TC 0118C CH 3	977.2	0.960	376.84	1.091
TC 0618D CH 4	968.4	0.961	368.00	1.066
TC 0618C CH 19	955.2	0.678	354.83	1.028
TC 0219A HEATER 2	973.5	0.942	373.12	1.081
TC 0219B CH 10	965.8	1.535	365.46	1.059
TC 0919A HTR 9 EXT	929.8	1.210	329.38	0.954
TC 0919B CH 29	904.1	1.158	303.78	0.880
TC 0718C CH 5	973.8	1.619	373.48	1.082
TC 0718D CH 6	973.4	0.776	373.06	1.081
TC 0319A HEATER 3	962.0	1.239	361.62	1.047
TC 0319B CH 12	950.4	0.856	350.06	1.014

RESULTS FOR DUCT WALL THERMOCOUPLES
FFM SERIES 2 TEST 4 RUN 204 DONE ON 22872 1602

DESCRIPTION	TEMP DEG F	STD DEV	RISE AB INLET T	NORMALIZED TEMP
TC D0B04 DUCT B	638.2	1.177	37.87	0.110
TC D0E04 DUCT E	643.9	0.673	43.54	0.126
TC D0F04 DUCT F	642.6	0.497	42.23	0.122
TC D0B08 DUCT B	689.1	0.541	88.78	0.257
TC D0D08 DUCT D	700.1	0.595	99.74	0.289
TC D0F08 DUCT F	700.5	0.484	100.18	0.290
TC D0B12 DUCT B	759.9	0.499	159.50	0.462
TC D0E12 DUCT E	756.8	0.564	156.48	0.453
TC D0F12 DUCT F	756.0	0.568	155.60	0.451
TC D0B16 DUCT B	832.3	0.336	231.91	0.672
TC D0D16 DUCT D	814.5	0.429	214.10	0.620
TC D0F16 DUCT F	826.9	0.487	226.56	0.656
TC D0D18 DUCT D	851.5	0.512	251.12	0.727
TC D0E18 DUCT E	864.5	0.326	264.12	0.765
TC DAB18 DUCT AB	858.6	0.482	258.20	0.748
TC DDE18 DUCT DE	854.1	0.410	253.71	0.735
TC DEF18 DUCT EF	865.5	0.497	265.18	0.768
TC D0F18 DUCT F	864.6	0.513	264.28	0.765
TC DFA18 DUCT FA	865.9	0.462	265.51	0.769
TC D0B21 DUCT B	885.8	0.719	285.39	0.827
TC D0D21 DUCT D	907.2	0.711	306.84	0.889
TC D0F21 DUCT F	919.8	0.602	319.45	0.925
TC D0B23 DUCT B	911.6	0.440	311.22	0.901
TC D0D23 DUCT D	926.4	0.663	326.08	0.944
TC D0F23 DUCT F	939.3	0.622	338.90	0.982

RESULTS FOR THERMOCOUPLES IN CHANNEL EXITS
FFM SERIES 2 TEST 4 RUN 204 DONE ON 22872 1602

DESCRIPTION	TEMP DEG F	STD DEV	RISE AB INLET T	NORMALIZED TEMP
TC EC03 EXIT CH 3	982.8	0.775	382.39	1.108
TC EC16 EXIT CH 16	959.1	0.710	358.71	1.039
TC EC17 EXIT CH 17	944.5	0.879	344.14	0.997
TC EC34 EXIT CH 34	941.8	0.797	341.46	0.989
TC EC35 EXIT CH 35	940.1	0.618	339.73	0.984
TC EC36 EXIT CH 36	943.1	0.686	342.69	0.993
TC EC06 EXIT CH 6	980.3	1.091	379.97	1.101
TC EC08 EXIT CH 8	932.0	0.537	331.68	0.961
TC EC27 EXIT CH 27	928.2	1.010	327.81	0.949
TC EA36 EXIT ANN EF	941.8	0.523	341.47	0.989
TC EA27 EXIT ANN BC	930.6	0.985	330.26	0.957
TC EA28 EXIT ANN C	934.1	0.753	333.71	0.967

RESULTS FOR THERMOCOUPLES INSIDE HEATERS
FFM SERIES 2 TEST 4 RUN 204 DONE ON 22872 1602

DESCRIPTION	TEMP DEG F	STD DEV	RISE AB INLET T	NORMALIZED TEMP
TC R0118AB HTR 1 INT	985.4	0.875	385.02	1.115
TC R0219AB HTR 2 INT	1007.8	7.372	407.38	1.180
TC R0418AB HTR 4 INT	990.4	5.888	390.07	1.130
TC R0518AB HTR 5 INT	974.6	1.469	374.24	1.084
TC R1218AB HEATER 12	882.3	0.896	281.88	0.816
TC R1318DE HEATER 13	903.1	1.079	302.71	0.877
TC R1418AB HEATER 14	899.6	1.247	299.26	0.867
TC R1618AB HEATER 16	899.6	3.075	299.23	0.867
TC R1718AB HEATER 17	933.1	1.366	332.72	0.964
TC R1817AB HEATER 18	868.2	2.632	267.82	0.776
TC R1918CD HEATER 19	628.5	0.184	28.11	0.081
TC R0118BC HEATER 1	992.3	2.879	391.88	1.135
TC R0118CD HEATER 1	994.9	0.750	394.49	1.143
TC R0118DE HEATER 1	989.3	0.919	388.91	1.126
TC R0219BC HEATER 2	994.1	12.206	393.76	1.140
TC R0418BC HEATER 4	981.2	1.041	380.84	1.103
TC R0418CD HEATER 4	982.0	1.279	381.61	1.105
TC R0418DE HEATER 4	966.4	0.911	366.02	1.060
TC R0518BC HEATER 5	967.3	2.311	366.90	1.063
TC R0518CD HEATER 5	986.8	1.823	386.42	1.119
TC R0718BC HEATER 7	1063.2	1.123	462.83	1.341
TC R0718CD HEATER 7	964.4	2.987	364.03	1.054
TC R0718DE HEATER 7	955.8	2.422	355.48	1.030
TC R0818BC HEATER 8	909.1	1.710	308.76	0.894
TC R1718BC HEATER 17	936.5	2.308	336.13	0.974
TC R1918BC HEATER 19	628.3	0.113	27.97	0.081
TC R1918DE HEATER 19	940.4	4.319	340.00	0.985

OPERATING DATA FOR FFM SERIES 2 TEST 4 RUN 205
WHICH WAS DONE ON 22872 1421

DESCRIPTION	MEAN VALUE	STANDARD DEVIATION
HEATER 1 POWER KW	3.19	0.008
HEATER 8,18,19 POWER	9.32	0.023
HTR 12,13,14 POWER	9.27	0.026
HTR 2,7,9,17 POWER	12.49	0.038
HTR 4,5,11,15 POWER	12.65	0.030
HTR 3,6,10,16 POWER	12.11	0.036
TOTAL POWER	58.60	0.182
TEST SECT FLOW, GPM	5.15	0.030
TEST SECT INLET PR	8.84	0.094
TEST SECT OUTLET PR	6.14	0.029
TOTAL FLOW, GPM	12.48	0.309
PUMP OUTLET PR, PSI	7.52	0.078
PUMP SPEED, RPM	155.36	1.004
BLOWER SPEED, RPM	171.22	0.634
AIR FLOW (200 F) CFM	1.14	0.021
TC 313 TEST SECT IN	623.43	0.418
TC 317 TEST SECT OUT	915.58	0.495
TC 300 PUMP OUTLET	621.59	0.289
TC 318 RADIATOR IN	913.30	0.704
TC 334 RADIATOR OUT	639.39	134.352
TC 336 PUMP INLET	620.72	0.233
TC 332 RAD AIR IN	97.14	0.638
TC 331 RAD AIR OUT	286.59	0.710

HEAT BALANCE ON SODIUM FLOWING THROUGH BUNDLE
HEAT SUPPLIED BY DUMMY FUEL RODS = 201587.31 BTU/HR
HEAT ADDED TO SODIUM = 201922.63 BTU/HR
PERCENT HEAT BALANCE = 100.17

RESULTS FOR UNGROUNDED JUNCTION THERMOCOUPLES
FFM SERIES 2 TEST 4 RUN 205 DONE ON 22872 1421

DESCRIPTION	TEMP DEG F	STD DEV	RISE AB INLET T	NORMALIZED TEMP
TC 1504U CH 37	668.1	0.496	44.69	0.153
TC 1706U CH 21	720.6	1.265	97.14	0.333
TC 1807U CH 24	735.7	1.615	112.23	0.385
TC 1108U CH 31	724.1	1.129	100.65	0.345
TC 0409U CH 13	790.3	2.163	166.92	0.572
TC 0509U CH 3	790.0	2.124	166.60	0.571
TC 1009U CH 29	727.9	1.095	104.44	0.358
TC 1409U CH 17	753.7	1.863	130.28	0.447
TC 1609U CH 21	755.6	1.220	132.14	0.453
TC 1914U CH 24	772.5	1.242	149.05	0.511
TC 0815U CH 8	849.9	1.898	226.50	0.777
TC 1316U CH 35	860.4	2.009	237.00	0.813
TC 1516U CH 37	820.7	1.545	197.29	0.676
TC 0817U CH 9	879.2	1.611	255.77	0.877
TC 1217U CH 33	831.1	1.381	207.69	0.712
TC 1318U CH 34	824.3	1.314	200.90	0.689
TC 1718U CH 22	903.2	1.641	279.74	0.959
TC 1219U CH 32	858.7	0.517	235.27	0.807
TC 1819U CH 24	887.7	0.430	264.26	0.906
TC 1120U CH 31	867.6	3.076	244.14	0.837
TC 0421U CH 13	968.2	0.435	344.74	1.182
TC 0521U CH 3	986.9	0.361	363.46	1.246
TC 1021U CH 29	881.0	0.305	257.56	0.883
TC 1421U CH 17	930.7	0.697	307.26	1.053
TC 1621U CH 21	915.8	0.190	292.42	1.003

RESULTS FOR GROUNDED JUNCTION THERMOCOUPLES
FFM SERIES 2 TEST 4 RUN 205 DONE ON 22872 1421

DESCRIPTION	TEMP DEG F	STD DEV	RISE AB INLET T	NORMALIZED TEMP
TC 0118C CH 3	950.7	1.064	327.26	1.122
TC 0618D CH 4	941.4	0.405	317.98	1.090
TC 0618C CH 19	928.5	0.386	305.12	1.046
TC 0219A HEATER 2	945.5	0.427	322.11	1.104
TC 0219B CH 10	935.7	1.028	312.31	1.071
TC 0919A HTR 9 EXT	903.5	0.427	280.06	0.960
TC 0919B CH 29	877.1	0.603	253.71	0.870
TC 0718C CH 5	949.0	0.311	325.61	1.116
TC 0718D CH 6	947.6	0.672	324.20	1.112
TC 0319A HEATER 3	933.7	0.328	310.29	1.064
TC 0319B CH 12	922.6	1.180	299.20	1.026

RESULTS FOR DUCT WALL THERMOCOUPLES
FFM SERIES 2 TEST 4 RUN 205 DONE ON 22872 1421

DESCRIPTION	TEMP DEG F	STD DEV	RISE AB INLET T	NORMALIZED TEMP
TC DOB04 DUCT B	651.3	0.270	27.86	0.096
TC DOE04 DUCT E	656.9	0.557	33.46	0.115
TC DOF04 DUCT F	656.0	0.456	32.53	0.112
TC DOB08 DUCT B	690.2	0.551	66.73	0.229
TC DOD08 DUCT D	700.1	0.384	76.72	0.263
TC DOF08 DUCT F	703.1	0.550	79.68	0.273
TC DOB12 DUCT B	748.0	0.711	124.62	0.427
TC DOE12 DUCT E	747.4	0.697	124.00	0.425
TC DOF12 DUCT F	744.8	0.593	121.35	0.416
TC DOB16 DUCT B	812.0	1.103	188.60	0.647
TC DOD16 DUCT D	791.1	1.007	167.65	0.575
TC DOF16 DUCT F	802.8	0.853	179.40	0.615
TC DOD18 DUCT D	821.5	0.858	198.06	0.679
TC DOE18 DUCT E	834.2	1.056	210.74	0.723
TC DAB18 DUCT AB	831.3	1.825	207.86	0.713
TC DDE18 DUCT DE	823.2	0.469	199.76	0.685
TC DEF18 DUCT EF	834.8	0.675	211.39	0.725
TC DOF18 DUCT F	833.9	1.099	210.50	0.722
TC DFA18 DUCT FA	836.3	0.466	212.86	0.730
TC DOB21 DUCT B	849.5	0.159	226.08	0.775
TC DOD21 DUCT D	868.4	0.456	244.94	0.840
TC DOF21 DUCT F	880.8	1.051	257.40	0.883
TC DOB23 DUCT B	871.7	0.541	248.28	0.851
TC DOD23 DUCT D	885.8	0.159	262.34	0.899
TC DOF23 DUCT F	897.2	1.208	273.73	0.939

RESULTS FOR THERMOCOUPLES IN CHANNEL EXITS
FFM SERIES 2 TEST 4 RUN 205 DONE ON 22872 1421

DESCRIPTION	TEMP DEG F	STD DEV	RISE AB INLET T	NORMALIZED TEMP
TC EC03 EXIT CH 3	950.2	0.453	326.76	1.120
TC EC16 EXIT CH 16	922.1	0.268	298.67	1.024
TC EC17 EXIT CH 17	904.8	0.427	281.41	0.965
TC EC34 EXIT CH 34	900.5	0.309	277.11	0.950
TC EC35 EXIT CH 35	899.2	0.171	275.74	0.945
TC EC36 EXIT CH 36	902.9	0.525	279.52	0.958
TC EC06 EXIT CH 6	952.3	0.573	328.90	1.128
TC EC08 EXIT CH 8	895.7	0.814	272.25	0.933
TC EC27 EXIT CH 27	891.8	0.431	268.38	0.920
TC EA36 EXIT ANN EF	901.8	0.502	278.38	0.954
TC EA27 EXIT ANN BC	893.7	0.421	270.25	0.927
TC EA28 EXIT ANN C	896.6	0.120	273.14	0.936

RESULTS FOR THERMOCOUPLES INSIDE HEATERS
FFM SERIES 2 TEST 4 RUN 205 DONE ON 22872 1421

DESCRIPTION	TEMP DEG F	STD DEV	RISE AB INLET T	NORMALIZED TEMP
TC R0118AB HTR 1 INT	964.1	1.795	340.69	1.168
TC R0219AB HTR 2 INT	967.4	0.947	343.98	1.179
TC R0418AB HTR 4 INT	968.5	1.354	345.05	1.183
TC R0518AB HTR 5 INT	950.3	0.967	326.85	1.121
TC R1218AB HEATER 12	858.8	1.272	235.35	0.807
TC R1318DE HEATER 13	880.9	0.755	257.44	0.883
TC R1418AB HEATER 14	877.0	1.432	253.59	0.869
TC R1618AB HEATER 16	878.8	0.969	255.41	0.876
TC R1718AB HEATER 17	914.0	0.489	290.58	0.996
TC R1817AB HEATER 18	854.4	0.805	230.98	0.792
TC R1918CD HEATER 19	628.4	0.268	4.98	0.017
TC R0118BC HEATER 1	966.2	2.598	342.80	1.175
TC R0118CD HEATER 1	972.8	0.562	349.42	1.198
TC R0118DE HEATER 1	967.2	0.449	343.74	1.179
TC R0219BC HEATER 2	980.0	11.252	356.58	1.223
TC R0418BC HEATER 4	958.3	0.909	334.84	1.148
TC R0418CD HEATER 4	956.3	0.629	332.84	1.141
TC R0418DE HEATER 4	940.3	2.270	316.85	1.086
TC R0518BC HEATER 5	948.9	2.410	325.52	1.116
TC R0518CD HEATER 5	959.3	1.402	335.83	1.151
TC R0718BC HEATER 7	1042.3	1.218	418.83	1.436
TC R0718CD HEATER 7	943.7	3.913	320.30	1.098
TC R0718DE HEATER 7	939.3	0.326	315.89	1.083
TC R0818BC HEATER 8	888.7	1.320	265.30	0.910
TC R1718BC HEATER 17	916.7	0.530	293.28	1.006
TC R1918BC HEATER 19	628.3	0.190	4.82	0.017
TC R1918DE HEATER 19	924.8	1.776	301.36	1.033

OPERATING DATA FOR FFM SERIES 2 TEST 4 RUN 205
WHICH WAS DONE ON 22872 1451

DESCRIPTION	MEAN VALUE	STANDARD DEVIATION
HEATER 1 POWER KW	3.19	0.005
HEATER 8,18,19 POWER	9.32	0.021
HTR 12,13,14 POWER	9.27	0.015
HTR 2,7,9,17 POWER	12.48	0.030
HTR 4,5,11,15 POWER	12.65	0.016
HTR 3,6,10,16 POWER	12.13	0.017
TOTAL POWER	58.61	0.066
TEST SECT FLOW, GPM	5.13	0.033
TEST SECT INLET PR	8.88	0.034
TEST SECT OUTLET PR	6.12	0.030
TOTAL FLOW, GPM	11.99	0.184
PUMP OUTLET PR, PSI	7.53	0.039
PUMP SPEED, RPM	155.05	1.557
BLOWER SPEED, RPM	172.23	0.625
AIR FLOW (200 F) CFM	1.11	0.018
TC 313 TEST SECT IN	612.20	0.185
TC 317 TEST SECT OUT	906.40	0.365
TC 300 PUMP OUTLET	612.53	0.254
TC 318 RADIATOR IN	890.05	5.691
TC 334 RADIATOR OUT	615.41	0.904
TC 336 PUMP INLET	612.04	0.351
TC 332 RAD AIR IN	97.38	0.423
TC 331 RAD AIR OUT	284.14	1.149

HEAT BALANCE ON SODIUM FLOWING THROUGH BUNDLE
HEAT SUPPLIED BY DUMMY FUEL RODS = 201621.50 BTU/HR
HEAT ADDED TO SODIUM = 203120.19 BTU/HR
PERCENT HEAT BALANCE = 100.74

RESULTS FOR UNGROUNDED JUNCTION THERMOCOUPLES
FFM SERIES 2 TEST 4 RUN 205 DONE ON 22872 1451

DESCRIPTION	TEMP DEG F	STD DEV	RISE AB INLET T	NORMALIZED TEMP
TC 1504U CH 37	658.0	1.842	45.79	0.157
TC 1706U CH 21	708.2	7.689	95.96	0.329
TC 1807U CH 24	725.1	0.888	112.92	0.387
TC 1108U CH 31	714.4	1.398	102.17	0.350
TC 0409U CH 13	780.2	0.498	168.01	0.575
TC 0509U CH 3	779.8	0.741	167.57	0.574
TC 1009U CH 29	717.0	0.592	104.83	0.359
TC 1409U CH 17	743.1	0.620	130.93	0.448
TC 1609U CH 21	745.1	0.502	132.91	0.455
TC 1914U CH 24	762.3	0.729	150.07	0.514
TC 0815U CH 8	840.4	0.851	228.23	0.782
TC 1316U CH 35	850.5	0.609	238.34	0.816
TC 1516U CH 37	810.6	0.460	198.40	0.679
TC 0817U CH 9	869.1	1.012	256.92	0.880
TC 1217U CH 33	823.8	0.594	211.61	0.725
TC 1318U CH 34	814.9	0.736	202.72	0.694
TC 1718U CH 22	892.9	0.737	280.71	0.961
TC 1219U CH 32	849.1	0.574	236.88	0.811
TC 1819U CH 24	877.8	0.688	265.61	0.910
TC 1120U CH 31	865.0	1.333	252.76	0.866
TC 0421U CH 13	958.5	1.007	346.32	1.186
TC 0521U CH 3	977.1	1.025	364.89	1.249
TC 1021U CH 29	871.5	0.811	259.35	0.888
TC 1421U CH 17	921.3	1.037	309.09	1.058
TC 1621U CH 21	905.9	0.829	293.75	1.006

RESULTS FOR GROUNDED JUNCTION THERMOCOUPLES
FFM SERIES 2 TEST 4 RUN 205 DONE ON 22872 1451

DESCRIPTION	TEMP DEG F	STD DEV	RISE AB INLET T	NORMALIZED TEMP
TC 0118C CH 3	941.0	1.057	328.81	1.126
TC 0618D CH 4	931.7	1.034	319.50	1.094
TC 0618C CH 19	919.6	1.237	307.42	1.053
TC 0219A HEATER 2	936.8	1.331	324.58	1.111
TC 0219B CH 10	926.1	0.747	313.91	1.075
TC 0919A HTR 9 EXT	893.2	2.041	280.98	0.962
TC 0919B CH 29	866.8	1.168	254.58	0.872
TC 0718C CH 5	939.7	1.081	327.48	1.121
TC 0718D CH 6	938.2	1.565	325.99	1.116
TC 0319A HEATER 3	924.5	0.979	312.30	1.069
TC 0319B CH 12	912.9	1.626	300.67	1.030

RESULTS FOR DUCT WALL THERMOCOUPLES
FFM SERIES 2 TEST 4 RUN 205 DONE ON 22872 1451

DESCRIPTION	TEMP DEG F	STD DEV	RISE AB INLET T	NORMALIZED TEMP
TC DOB04 DUCT B	640.6	0.378	28.41	0.097
TC DOE04 DUCT E	645.9	0.185	33.75	0.116
TC DOF04 DUCT F	645.0	0.203	32.76	0.112
TC DOB08 DUCT B	679.6	0.288	67.43	0.231
TC DOD08 DUCT D	689.5	0.540	77.35	0.265
TC DOF08 DUCT F	692.2	0.377	80.00	0.274
TC DOB12 DUCT B	738.1	0.270	125.89	0.431
TC DOE12 DUCT E	736.6	0.177	124.44	0.426
TC DOF12 DUCT F	736.0	0.578	123.81	0.424
TC DOB16 DUCT B	801.7	0.502	189.46	0.649
TC DOD16 DUCT D	781.1	0.338	168.88	0.578
TC DOF16 DUCT F	792.8	0.378	180.61	0.618
TC DOD18 DUCT D	812.6	0.929	200.37	0.686
TC DOE18 DUCT E	824.9	0.389	212.71	0.728
TC DAB18 DUCT AB	821.5	1.094	209.33	0.717
TC DDE18 DUCT DE	813.3	0.379	201.12	0.689
TC DEF18 DUCT EF	825.1	0.296	212.94	0.729
TC DOF18 DUCT F	824.0	0.680	211.79	0.725
TC DFA18 DUCT FA	825.9	0.657	213.75	0.732
TC DOB21 DUCT B	839.9	1.006	227.74	0.780
TC DOD21 DUCT D	858.8	0.707	246.64	0.845
TC DOF21 DUCT F	871.2	0.817	259.02	0.887
TC DOB23 DUCT B	862.5	0.779	250.35	0.857
TC DOD23 DUCT D	875.4	0.942	263.20	0.901
TC DOF23 DUCT F	887.9	0.923	275.68	0.944

RESULTS FOR THERMOCOUPLES IN CHANNEL EXITS
FFM SERIES 2 TEST 4 RUN 205 DONE ON 22872 1451

DESCRIPTION	TEMP DEG F	STD DEV	RISE AB INLET T	NORMALIZED TEMP
TC EC03 EXIT CH 3	939.9	0.914	327.72	1.122
TC EC16 EXIT CH 16	912.6	0.838	300.39	1.029
TC EC17 EXIT CH 17	895.0	0.719	282.78	0.968
TC EC34 EXIT CH 34	891.5	0.703	279.28	0.956
TC EC35 EXIT CH 35	889.3	0.940	277.11	0.949
TC EC36 EXIT CH 36	892.4	0.980	280.17	0.959
TC EC06 EXIT CH 6	942.5	1.126	330.32	1.131
TC EC08 EXIT CH 8	886.5	0.447	274.27	0.939
TC EC27 EXIT CH 27	881.6	1.348	269.39	0.922
TC EA36 EXIT ANN EF	891.8	0.591	279.59	0.957
TC EA27 EXIT ANN BC	884.1	1.116	271.88	0.931
TC EA28 EXIT ANN C	887.0	0.237	274.81	0.941

RESULTS FOR THERMOCOUPLES INSIDE HEATERS
FFM SERIES 2 TEST 4 RUN 205 DONE ON 22872 1451

DESCRIPTION	TEMP DEG F	STD DEV	RISE AB INLET T	NORMALIZED TEMP
TC R0118AB HTR 1 INT	952.9	1.142	340.72	1.167
TC R0219AB HTR 2 INT	956.4	1.610	344.19	1.179
TC R0418AB HTR 4 INT	964.7	3.429	352.47	1.207
TC R0518AB HTR 5 INT	939.6	1.309	327.38	1.121
TC R1218AB HEATER 12	849.3	0.872	237.12	0.812
TC R1318DE HEATER 13	871.2	1.421	258.98	0.887
TC R1418AB HEATER 14	865.0	0.594	252.84	0.866
TC R1618AB HEATER 16	867.2	3.462	254.99	0.873
TC R1718AB HEATER 17	904.8	0.694	292.65	1.002
TC R1817AB HEATER 18	835.6	4.270	223.45	0.765
TC R1918CD HEATER 19	628.4	0.353	16.24	0.056
TC R0118BC HEATER 1	955.7	1.229	343.49	1.176
TC R0118CD HEATER 1	962.8	1.002	350.61	1.201
TC R0118DE HEATER 1	956.5	0.625	344.34	1.179
TC R0219BC HEATER 2	951.4	11.276	339.20	1.162
TC R0418BC HEATER 4	948.1	1.485	335.89	1.150
TC R0418CD HEATER 4	947.4	1.104	335.22	1.148
TC R0418DE HEATER 4	934.3	0.839	322.05	1.103
TC R0518BC HEATER 5	940.8	2.635	328.62	1.125
TC R0518CD HEATER 5	950.2	1.448	338.02	1.157
TC R0718BC HEATER 7	1034.6	1.213	422.38	1.446
TC R0718CD HEATER 7	937.8	2.914	325.55	1.115
TC R0718DE HEATER 7	931.9	2.622	319.68	1.095
TC R0818BC HEATER 8	881.6	1.809	269.43	0.923
TC R1718BC HEATER 17	907.8	1.150	295.60	1.012
TC R1918BC HEATER 19	628.5	0.135	16.34	0.056
TC R1918DE HEATER 19	915.1	0.816	302.91	1.037

OPERATING DATA FOR FFM SERIES 2 TEST 4 RUN 205
WHICH WAS DONE ON 22972 1037

DESCRIPTION	MEAN VALUE	STANDARD DEVIATION
HEATER 1 POWER KW	3.15	0.0
HEATER 8,18,19 POWER	9.22	0.010
HTR 12,13,14 POWER	9.15	0.019
HTR 2,7,9,17 POWER	12.37	0.012
HTR 4,5,11,15 POWER	12.59	0.012
HTR 3,6,10,16 POWER	11.97	0.010
TOTAL POWER	58.04	0.060
TEST SECT FLOW, GPM	4.98	0.034
TEST SECT INLET PR	8.82	0.029
TEST SECT OUTLET PR	6.15	0.046
TOTAL FLOW, GPM	11.91	0.266
PUMP OUTLET PR, PSI	7.53	0.041
PUMP SPEED, RPM	149.85	0.520
BLOWER SPEED, RPM	130.82	0.263
AIR FLOW (200 F) CFM	1.05	0.013
TC 313 TEST SECT IN	616.86	0.285
TC 317 TEST SECT OUT	905.32	0.633
TC 300 PUMP OUTLET	618.22	0.324
TC 318 RADIATOR IN	899.47	2.011
TC 334 RADIATOR OUT	629.10	1.784
TC 336 PUMP INLET	619.41	0.285
TC 332 RAD AIR IN	95.32	0.834
TC 331 RAD AIR OUT	294.03	2.560

HEAT BALANCE ON SODIUM FLOWING THROUGH BUNDLE
HEAT SUPPLIED BY DUMMY FUEL RODS = 199606.63 BTU/HR
HEAT ADDED TO SODIUM = 193096.56 BTU/HR
PERCENT HEAT BALANCE = 96.74

RESULTS FOR UNGROUNDED JUNCTION THERMOCOUPLES
FFM SERIES 2 TEST 4 RUN 205 DONE ON 22972 1037

DESCRIPTION	TEMP DEG F	STD DEV	RISE AB INLET T	NORMALIZED TEMP
TC 1504U CH 37	661.4	0.334	44.55	0.149
TC 1706U CH 21	713.9	0.852	97.00	0.325
TC 1807U CH 24	729.4	0.401	112.55	0.377
TC 1108U CH 31	718.0	0.494	101.15	0.339
TC 0409U CH 13	783.4	0.324	166.52	0.558
TC 0509U CH 3	784.5	0.145	167.68	0.562
TC 1009U CH 29	720.8	0.499	103.89	0.348
TC 1409U CH 17	746.2	0.762	129.37	0.434
TC 1609U CH 21	749.5	0.538	132.66	0.445
TC 1914U CH 24	763.8	1.203	146.90	0.493
TC 0815U CH 8	841.9	0.990	225.03	0.755
TC 1316U CH 35	850.8	0.324	233.91	0.784
TC 1516U CH 37	811.3	0.409	194.49	0.652
TC 0817U CH 9	871.9	0.587	255.07	0.855
TC 1217U CH 33	826.7	0.549	209.80	0.704
TC 1318U CH 34	817.9	0.376	201.08	0.674
TC 1718U CH 22	895.3	0.155	278.48	0.934
TC 1219U CH 32	850.5	0.549	233.65	0.784
TC 1819U CH 24	878.4	0.747	261.59	0.877
TC 1120U CH 31	864.6	1.063	247.76	0.831
TC 0421U CH 13	959.4	0.523	342.50	1.149
TC 0521U CH 3	976.8	0.839	359.96	1.207
TC 1021U CH 29	871.6	0.471	254.71	0.854
TC 1421U CH 17	920.9	0.523	304.08	1.020
TC 1621U CH 21	907.5	0.376	290.67	0.975

RESULTS FOR GROUNDED JUNCTION THERMOCOUPLES
FFM SERIES 2 TEST 4 RUN 205 DONE ON 22972 1037

DESCRIPTION	TEMP DEG F	STD DEV	RISE AB INLET T	NORMALIZED TEMP
TC 0118C CH 3	941.7	0.504	324.83	1.089
TC 0618D CH 4	932.9	0.943	316.06	1.060
TC 0618C CH 19	918.7	0.658	301.85	1.012
TC 0219A HEATER 2	935.7	0.779	318.81	1.069
TC 0219B CH 10	927.5	0.397	310.67	1.042
TC 0919A HTR 9 EXT	894.8	0.471	277.98	0.932
TC 0919B CH 29	868.1	0.722	251.22	0.842
TC 0718C CH 5	941.4	0.247	324.53	1.088
TC 0718D CH 6	939.4	1.034	322.56	1.082
TC 0319A HEATER 3	925.5	0.601	308.63	1.035
TC 0319B CH 12	914.1	0.888	297.22	0.997

RESULTS FOR DUCT WALL THERMOCOUPLES
FFM SERIES 2 TEST 4 RUN 205 DONE ON 22972 1037

DESCRIPTION	TEMP DEG F	STD DEV	RISE AB INLET T	NORMALIZED TEMP
TC D0B04 DUCT B	643.4	0.303	26.59	0.089
TC D0E04 DUCT E	650.1	0.376	33.23	0.111
TC D0F04 DUCT F	649.2	0.713	32.30	0.108
TC D0B08 DUCT B	681.6	0.549	64.72	0.217
TC D0D08 DUCT D	693.9	0.833	77.05	0.258
TC D0F08 DUCT F	695.5	0.248	78.60	0.264
TC D0B12 DUCT B	739.7	0.324	122.81	0.412
TC D0E12 DUCT E	739.2	0.549	122.32	0.410
TC D0F12 DUCT F	738.3	0.271	121.40	0.407
TC D0B16 DUCT B	802.7	0.953	185.81	0.623
TC D0D16 DUCT D	782.6	0.495	165.79	0.556
TC D0F16 DUCT F	794.7	0.549	177.82	0.596
TC D0D18 DUCT D	813.8	0.170	196.97	0.661
TC D0E18 DUCT E	825.6	0.656	208.79	0.700
TC DAB18 DUCT AB	822.1	0.435	205.22	0.688
TC DDE18 DUCT DE	814.5	0.435	197.60	0.663
TC DEF18 DUCT EF	825.5	0.549	208.63	0.700
TC D0F18 DUCT F	825.9	0.460	209.09	0.701
TC DFA18 DUCT FA	828.2	0.409	211.34	0.709
TC D0B21 DUCT B	839.6	0.039	222.77	0.747
TC D0D21 DUCT D	858.6	0.549	241.75	0.811
TC D0F21 DUCT F	872.3	0.611	255.40	0.857
TC D0B23 DUCT B	863.1	0.428	246.23	0.826
TC D0D23 DUCT D	876.6	0.260	259.72	0.871
TC D0F23 DUCT F	887.9	0.549	271.00	0.909

RESULTS FOR THERMOCOUPLES IN CHANNEL EXITS
FFM SERIES 2 TEST 4 RUN 205 DONE ON 22972 1037

DESCRIPTION	TEMP DEG F	STD DEV	RISE AB INLET T	NORMALIZED TEMP
TC EC03 EXIT CH 3	941.0	0.637	324.16	1.087
TC EC16 EXIT CH 16	913.4	0.611	296.52	0.994
TC EC17 EXIT CH 17	895.5	0.601	278.61	0.934
TC EC34 EXIT CH 34	891.4	0.473	274.55	0.921
TC EC35 EXIT CH 35	890.3	0.271	273.46	0.917
TC EC36 EXIT CH 36	893.6	0.523	276.73	0.928
TC EC06 EXIT CH 6	942.5	0.762	325.61	1.092
TC EC08 EXIT CH 8	885.0	0.363	268.14	0.899
TC EC27 EXIT CH 27	880.1	1.328	263.23	0.883
TC EA36 EXIT ANN EF	893.1	0.664	276.23	0.926
TC EA27 EXIT ANN BC	883.1	0.443	266.26	0.893
TC EA28 EXIT ANN C	886.9	0.209	270.00	0.905

RESULTS FOR THERMOCOUPLES INSIDE HEATERS
FFM SERIES 2 TEST 4 RUN 205 DONE ON 22972 1037

DESCRIPTION	TEMP DEG F	STD DEV	RISE AB INLET T	NORMALIZED TEMP
TC R0118AB HTR 1 INT	953.9	0.901	337.08	1.130
TC R0219AB HTR 2 INT	956.5	13.233	339.62	1.139
TC R0418AB HTR 4 INT	958.3	5.228	341.47	1.145
TC R0518AB HTR 5 INT	937.9	2.989	321.03	1.077
TC R1218AB HEATER 12	850.6	1.444	233.73	0.784
TC R1318DE HEATER 13	872.4	1.040	255.57	0.857
TC R1418AB HEATER 14	867.2	0.758	250.34	0.840
TC R1618AB HEATER 16	871.6	4.429	254.79	0.854
TC R1718AB HEATER 17	906.5	1.835	289.61	0.971
TC R1817AB HEATER 18	851.5	2.051	234.66	0.787
TC R1918CD HEATER 19	594.3	0.132	-22.51	-0.075
TC R0118BC HEATER 1	962.4	2.203	345.52	1.159
TC R0118CD HEATER 1	960.8	0.928	343.95	1.153
TC R0118DE HEATER 1	959.3	0.517	342.47	1.149
TC R0219BC HEATER 2	951.0	18.350	334.18	1.121
TC R0418BC HEATER 4	952.3	1.023	335.43	1.125
TC R0418CD HEATER 4	948.1	0.731	331.24	1.111
TC R0418DE HEATER 4	934.6	0.215	317.73	1.066
TC R0518BC HEATER 5	943.4	1.541	326.55	1.095
TC R0518CD HEATER 5	953.3	2.694	336.48	1.128
TC R0718BC HEATER 7	942.7	1.950	325.88	1.093
TC R0718CD HEATER 7	936.6	1.419	319.70	1.072
TC R0718DE HEATER 7	931.5	0.996	314.64	1.055
TC R0818BC HEATER 8	879.4	2.509	262.59	0.881
TC R1718BC HEATER 17	907.9	2.988	291.09	0.976
TC R1918BC HEATER 19	594.5	0.177	-22.39	-0.075
TC R1918DE HEATER 19	920.5	3.301	303.62	1.018

OPERATING DATA FOR FFM SERIES 2 TEST 6 RUN 104
WHICH WAS DONE ON 30672 1309

DESCRIPTION	MEAN VALUE	STANDARD DEVIATION
HEATER 1 POWER KW	47.58	0.022
HEATER 8,18,19 POWER	0.0	0.0
HTR 12,13,14 POWER	-0.09	0.018
HTR 2,7,9,17 POWER	34.25	0.052
HTR 4,5,11,15 POWER	35.04	0.033
HTR 3,6,10,16 POWER	33.84	0.022
TOTAL POWER	119.60	0.224
TEST SECT FLOW, GPM	54.56	0.072
TEST SECT INLET PR	34.15	0.160
TEST SECT OUTLET PR	8.70	0.034
TOTAL FLOW, GPM	112.90	0.877
PUMP OUTLET PR, PSI	35.85	0.102
PUMP SPEED, RPM	1507.40	0.894
BLOWER SPEED, RPM	406.84	0.513
AIR FLOW (200 F) CFM	1.97	0.039
TC 313 TEST SECT IN	618.33	0.206
TC 317 TEST SECT OUT	674.71	0.210
TC 300 PUMP OUTLET	618.18	0.063
TC 318 RADIATOR IN	661.21	6.544
TC 334 RADIATOR OUT	615.27	2.044
TC 336 PUMP INLET	617.88	0.063
TC 332 RAD AIR IN	88.49	0.359
TC 331 RAD AIR OUT	214.23	0.154

HEAT BALANCE ON SODIUM FLOWING THROUGH BUNDLE
HEAT SUPPLIED BY DUMMY FUEL RODS = 514674.56 BTU/HR
HEAT ADDED TO SODIUM = 413365.19 BTU/HR
PERCENT HEAT BALANCE = 80.32

RESULTS FOR UNGROUNDED JUNCTION THERMOCOUPLES
FFM SERIES 2 TEST 6 RUN 104 DONE ON 30672 1309

DESCRIPTION	TEMP DEG F	STD DEV	RISE AB INLET T	NORMALIZED TEMP
TC 1504U CH 37	618.1	0.250	-0.26	-0.004
TC 1706U CH 21	638.2	0.221	19.87	0.283
TC 1807U CH 24	642.2	0.340	23.86	0.340
TC 1108U CH 31	620.1	0.209	1.81	0.026
TC 0409U CH 13	678.7	0.175	60.39	0.860
TC 0509U CH 3	712.6	0.316	94.27	1.343
TC 1009U CH 29	618.5	0.206	0.18	0.003
TC 1409U CH 17	626.5	0.221	8.17	0.116
TC 1609U CH 21	627.4	0.221	9.09	0.129
TC 1914U CH 24	620.5	0.225	2.18	0.031
TC 0815U CH 8	660.6	0.063	42.29	0.602
TC 1316U CH 35	632.1	0.215	13.75	0.196
TC 1516U CH 37	632.0	0.270	13.65	0.194
TC 0817U CH 9	667.8	0.332	49.48	0.705
TC 1217U CH 33	629.3	0.290	10.93	0.156
TC 1318U CH 34	635.7	0.221	17.41	0.248
TC 1718U CH 22	686.0	0.167	67.70	0.964
TC 1219U CH 32	626.4	0.479	8.05	0.115
TC 1819U CH 24	645.1	0.593	26.77	0.381
TC 1120U CH 31	634.6	0.348	16.24	0.231
TC 0421U CH 13	761.0	0.620	142.65	2.032
TC 0521U CH 3	770.4	0.620	152.03	2.166
TC 1021U CH 29	626.5	0.318	8.21	0.117
TC 1421U CH 17	647.8	0.438	29.47	0.420
TC 1621U CH 21	696.3	0.456	77.99	1.111

RESULTS FOR GROUNDED JUNCTION THERMOCOUPLES
FFM SERIES 2 TEST 6 RUN 104 DONE ON 30672 1309

DESCRIPTION	TEMP DEG F	STD DEV	RISE AB INLET T	NORMALIZED TEMP
TC 0118C CH 3	797.3	0.343	178.92	2.549
TC 0618D CH 4	773.0	0.346	154.72	2.204
TC 0618C CH 19	742.7	0.684	124.34	1.771
TC 0219A HEATER 2	770.4	0.780	152.07	2.166
TC 0219B CH 10	739.3	0.468	121.01	1.724
TC 0919A HTR 9 EXT	678.0	0.407	59.69	0.850
TC 0919B CH 29	657.3	0.388	38.94	0.555
TC 0718C CH 5	799.9	0.737	181.60	2.587
TC 0718D CH 6	781.3	0.677	162.95	2.321
TC 0319A HEATER 3	740.4	0.747	122.06	1.739
TC 0319B CH 12	707.8	0.401	89.45	1.274

RESULTS FOR DUCT WALL THERMCCOUPLES
FFM SERIES 2 TEST 6 RUN 104 DONE ON 30672 1309

DESCRIPTION	TEMP DEG F	STD DEV	RISE AB INLET T	NORMALIZED TEMP
TC DOB04 DUCT B	617.6	0.149	-0.69	-0.010
TC DOE04 DUCT E	617.5	0.290	-0.83	-0.012
TC DOF04 DUCT F	617.5	0.203	-0.81	-0.012
TC DOB08 DUCT B	617.7	0.159	-0.65	-0.009
TC DOD08 DUCT D	618.0	0.225	-0.32	-0.005
TC DOF08 DUCT F	618.4	0.063	0.09	0.001
TC DOB12 DUCT B	618.9	0.063	0.53	0.008
TC DOE12 DUCT E	620.1	0.239	1.75	0.025
TC DOF12 DUCT F	618.4	0.224	0.10	0.001
TC DOB16 DUCT B	629.1	0.221	10.75	0.153
TC DOD16 DUCT D	620.4	0.239	2.07	0.029
TC DOF16 DUCT F	622.5	0.121	4.15	0.059
TC DOD18 DUCT D	621.6	0.097	3.23	0.046
TC DOE18 DUCT E	623.8	0.121	5.43	0.077
TC DAB18 DUCT AB	625.0	0.239	6.67	0.095
TC DDE18 DUCT DE	621.3	0.063	2.97	0.042
TC DEF18 DUCT EF	621.3	0.236	2.96	0.042
TC DOF18 DUCT F	625.5	0.215	7.18	0.102
TC DFA18 DUCT FA	624.5	0.221	6.13	0.087
TC DOB21 DUCT B	624.9	0.468	6.59	0.094
TC DOD21 DUCT D	625.3	0.479	6.99	0.100
TC DOF21 DUCT F	632.5	0.537	14.19	0.202
TC DOB23 DUCT B	626.9	0.473	8.59	0.122
TC DOD23 DUCT D	628.7	0.179	10.33	0.147
TC DOF23 DUCT F	631.3	0.593	12.93	0.184

RESULTS FOR THERMOCOUPLES IN CHANNEL EXITS
FFM SERIES 2 TEST 6 RUN 104 DONE ON 30672 1309

DESCRIPTION	TEMP DEG F	STD DEV	RISE AB INLET T	NORMALIZED TEMP
TC EC03 EXIT CH 3	714.4	0.597	96.04	1.368
TC EC16 EXIT CH 16	656.7	0.438	38.37	0.547
TC EC17 EXIT CH 17	647.9	0.457	29.60	0.422
TC EC34 EXIT CH 34	635.7	0.289	17.39	0.248
TC EC35 EXIT CH 35	637.1	0.468	18.77	0.267
TC EC36 EXIT CH 36	640.1	0.607	21.73	0.310
TC EC06 EXIT CH 6	732.9	0.473	114.59	1.632
TC EC08 EXIT CH 8	668.9	0.355	50.62	0.721
TC EC27 EXIT CH 27	640.9	0.567	22.56	0.321
TC EA36 EXIT ANN EF	642.3	0.483	24.01	0.342
TC EA27 EXIT ANN BC	644.5	0.405	26.18	0.373
TC EA28 EXIT ANN C	647.4	0.432	29.10	0.415

RESULTS FOR THERMOCOUPLES INSIDE HEATERS
FFM SERIES 2 TEST 6 RUN 104 DONE ON 30672 1309

DESCRIPTION	TEMP DEG F	STD DEV	RISE AB INLET T	NORMALIZED TEMP
TC R0118AB HTR 1 INT	901.7	0.224	283.38	4.037
TC R0219AB HTR 2 INT	857.3	0.623	238.96	3.404
TC R0418AB HTR 4 INT	939.8	0.665	321.50	4.580
TC R0518AB HTR 5 INT	875.1	0.436	256.77	3.658
TC R1019AB HEATER 10	660.0	0.602	41.69	0.594
TC R1218AB HEATER 12	627.8	1.345	9.49	0.135
TC R1318DE HEATER 13	639.1	0.420	20.77	0.296
TC R1418AB HEATER 14	627.3	0.420	8.99	0.128
TC R1518AB HEATER 15	709.0	0.673	90.71	1.292
TC R1618AB HEATER 16	627.7	0.263	9.35	0.133
TC R1718AB HEATER 17	681.5	0.607	63.15	0.900
TC R1817AB HEATER 18	628.4	0.438	10.05	0.143
TC R0118BC HEATER 1	921.8	0.418	303.44	4.323
TC R0118CD HEATER 1	947.1	0.408	328.82	4.684
TC R0118DE HEATER 1	920.3	0.454	301.94	4.301
TC R0219BC HEATER 2	866.8	0.258	248.50	3.540
TC R0418BC HEATER 4	898.8	0.763	280.50	3.996
TC R0418CD HEATER 4	890.6	0.376	272.27	3.879
TC R0418DE HEATER 4	904.5	0.397	286.17	4.077
TC R0518BC HEATER 5	877.7	0.355	259.38	3.695
TC R0518CD HEATER 5	897.1	0.405	278.74	3.971
TC R0718BC HEATER 7	875.6	0.498	257.31	3.665
TC R0718CD HEATER 7	871.8	0.354	253.47	3.611
TC R0718DE HEATER 7	846.3	0.289	227.96	3.247
TC R0818BC HEATER 8	641.4	0.294	23.09	0.329
TC R1019BC HEATER 10	659.5	0.427	41.19	0.587
TC R1718BC HEATER 17	682.3	0.401	63.95	0.911
TC R1918DE HEATER 19	694.6	0.209	76.27	1.086

OPERATING DATA FOR FFM SERIES 2 TEST 6 RUN 102
WHICH WAS DONE ON 32172 1033

DESCRIPTION	MEAN VALUE	STANDARD DEVIATION
HEATER 1 POWER KW	17.25	0.034
HEATER 8,18,19 POWER	0.0	0.0
HTR 12,13,14 POWER	-0.08	0.0
HTR 2,7,9,17 POWER	33.62	0.082
HTR 4,5,11,15 POWER	34.22	0.049
HTR 3,6,10,16 POWER	33.12	0.061
TOTAL POWER	117.28	0.249
TEST SECT FLOW, GPM	40.29	0.059
TEST SECT INLET PR	23.56	0.091
TEST SECT OUTLET PR	7.63	0.026
TOTAL FLOW, GPM	85.84	0.998
PUMP OUTLET PR, PSI	23.35	0.024
PUMP SPEED, RPM	1142.40	1.140
BLOWER SPEED, RPM	411.10	0.539
AIR FLOW (200 F) CFM	1.98	0.069
TC 313 TEST SECT IN	605.59	0.196
TC 317 TEST SECT OUT	680.57	0.166
TC 300 PUMP OUTLET	605.92	0.182
TC 318 RADIATOR IN	680.45	0.080
TC 334 RADIATOR OUT	600.83	0.189
TC 336 PUMP INLET	605.38	0.182
TC 332 RAD AIR IN	88.75	0.185
TC 331 RAD AIR OUT	212.19	0.332

HEAT BALANCE ON SODIUM FLOWING THROUGH BUNDLE
HEAT SUPPLIED BY DUMMY FUEL RODS = 403687.06 BTU/HR
HEAT ADDED TO SODIUM = 407346.00 BTU/HR
PERCENT HEAT BALANCE = 100.91

RESULTS FOR UNGROUNDED JUNCTION THERMOCOUPLES
FFM SERIES 2 TEST 6 RUN 102 DONE ON 32172 1033

DESCRIPTION	TEMP DEG F	STD DEV	RISE AB INLET T	NORMALIZED TEMP
TC 1504U CH 37	605.3	0.166	-0.29	-0.004
TC 1706U CH 21	632.9	0.130	27.28	0.367
TC 1807U CH 24	636.9	0.203	31.32	0.421
TC 1108U CH 31	608.9	0.182	3.29	0.044
TC 0409U CH 13	686.0	0.265	80.39	1.082
TC 0509U CH 3	723.6	0.260	117.97	1.588
TC 1009U CH 29	606.3	0.196	0.70	0.009
TC 1409U CH 17	617.3	0.166	11.70	0.157
TC 1609U CH 21	617.5	0.182	11.91	0.160
TC 1914U CH 24	609.7	0.285	4.12	0.055
TC 0815U CH 8	660.9	0.197	55.28	0.744
TC 1316U CH 35	623.0	0.265	17.37	0.234
TC 1516U CH 37	621.1	0.210	15.48	0.208
TC 0817U CH 9	678.9	0.283	73.36	0.987
TC 1217U CH 33	621.0	0.377	15.38	0.207
TC 1318U CH 34	626.5	0.210	20.90	0.281
TC 1718U CH 22	698.4	0.196	92.86	1.250
TC 1219U CH 32	616.8	0.174	11.19	0.151
TC 1819U CH 24	639.4	0.239	33.78	0.455
TC 1120U CH 31	622.1	0.421	16.49	0.222
TC 0421U CH 13	780.9	0.278	175.30	2.359
TC 0521U CH 3	810.7	0.159	205.12	2.760
TC 1021U CH 29	620.1	0.167	14.50	0.195
TC 1421U CH 17	644.3	0.209	38.76	0.522
TC 1621U CH 21	694.0	0.174	88.41	1.190

RESULTS FOR GROUNDED JUNCTION THERMOCOUPLES
FFM SERIES 2 TEST 6 RUN 102 DONE ON 32172 1033

DESCRIPTION	TEMP DEG F	STD DEV	RISE AB INLET T	NORMALIZED TEMP
TC 0118C CH 3	832.2	0.496	226.62	3.050
TC 0618D CH 4	805.0	0.159	199.38	2.683
TC 0618C CH 19	763.8	0.215	158.16	2.128
TC 0219A HEATER 2	799.3	0.239	193.68	2.607
TC 0219B CH 10	762.5	0.261	156.90	2.112
TC 0919A HTR 9 EXT	683.0	0.190	77.38	1.041
TC 0919B CH 29	659.4	0.395	53.82	0.724
TC 0718C CH 5	838.5	0.329	232.88	3.134
TC 0718D CH 6	819.4	1.165	213.77	2.877
TC 0319A HEATER 3	764.6	0.360	159.06	2.141
TC 0319B CH 12	727.3	0.063	121.76	1.639

RESULTS FOR DUCT WALL THERMOCOUPLES
FFM SERIES 2 TEST 6 RUN 102 DONE ON 32172 1033

DESCRIPTION	TEMP DEG F	STD DEV	RISE AB INLET T	NORMALIZED TEMP
TC D0B04 DUCT B	604.9	0.265	-0.73	-0.010
TC D0E04 DUCT E	605.2	0.273	-0.40	-0.005
TC D0F04 DUCT F	605.0	0.095	-0.58	-0.008
TC D0B08 DUCT B	605.6	0.110	0.04	0.001
TC D0D08 DUCT D	606.2	0.110	0.58	0.008
TC D0F08 DUCT F	605.9	0.196	0.35	0.005
TC D0B12 DUCT B	607.0	0.182	1.43	0.019
TC D0E12 DUCT E	608.5	0.197	2.90	0.039
TC D0F12 DUCT F	606.1	0.110	0.56	0.008
TC D0B16 DUCT B	622.0	0.182	16.41	0.221
TC D0D16 DUCT D	609.3	0.260	3.72	0.050
TC D0F16 DUCT F	611.3	0.273	5.74	0.077
TC D0D18 DUCT D	610.8	0.166	5.16	0.069
TC D0E18 DUCT E	613.6	0.386	7.98	0.107
TC DAB18 DUCT AB	616.3	0.189	10.72	0.144
TC DDE18 DUCT DE	610.6	0.166	5.04	0.068
TC DEF18 DUCT EF	610.2	0.193	4.60	0.062
TC D0F18 DUCT F	615.6	0.061	10.05	0.135
TC DFA18 DUCT FA	615.2	0.080	9.58	0.129
TC D0B21 DUCT B	615.0	0.080	9.40	0.127
TC D0D21 DUCT D	616.3	0.273	10.68	0.144
TC D0F21 DUCT F	624.1	0.285	18.50	0.249
TC D0B23 DUCT B	618.8	0.185	13.20	0.178
TC D0D23 DUCT D	620.2	0.209	14.65	0.197
TC D0F23 DUCT F	623.6	0.080	18.00	0.242

RESULTS FOR THERMOCOUPLES IN CHANNEL EXITS
FFM SERIES 2 TEST 6 RUN 102 DONE ON 32172 1033

DESCRIPTION	TEMP DEG F	STD DEV	RISE AB INLET T	NORMALIZED TEMP
TC EC03 EXIT CH 3	747.6	0.215	141.99	1.911
TC EC16 EXIT CH 16	663.0	0.522	57.44	0.773
TC EC17 EXIT CH 17	640.3	0.210	34.70	0.467
TC EC34 EXIT CH 34	628.6	0.263	23.06	0.310
TC EC35 EXIT CH 35	630.9	0.278	25.30	0.340
TC EC36 EXIT CH 36	634.2	0.222	28.62	0.385
TC EC06 EXIT CH 6	740.8	0.239	135.24	1.820
TC EC08 EXIT CH 8	667.7	0.397	62.12	0.836
TC EC27 EXIT CH 27	638.4	0.435	32.83	0.442
TC EA36 EXIT ANN EF	637.0	0.298	31.40	0.423
TC EA27 EXIT ANN BC	642.4	0.781	36.77	0.495
TC EA28 EXIT ANN C	645.7	0.454	40.10	0.540

RESULTS FOR THERMOCOUPLES INSIDE HEATERS
FFM SERIES 2 TEST 6 RUN 102 DONE ON 32172 1033

DESCRIPTION	TEMP DEG F	STD DEV	RISE AB INLET T	NORMALIZED TEMP
TC R0118AB HTR 1 INT	940.5	0.310	334.96	4.508
TC R0219AB HTR 2 INT	889.6	0.298	284.06	3.823
TC R0418AB HTR 4 INT	966.3	0.318	360.71	4.854
TC R0518AB HTR 5 INT	901.0	0.080	295.42	3.976
TC R1019AB HEATER 10	668.9	0.252	63.32	0.852
TC R1218AB HEATER 12	615.5	0.516	9.94	0.134
TC R1318DE HEATER 13	631.5	0.260	25.91	0.349
TC R1418AB HEATER 14	619.3	0.088	13.68	0.184
TC R1518AB HEATER 15	721.9	0.222	116.30	1.565
TC R1618AB HEATER 16	618.8	0.285	13.16	0.177
TC R1718AB HEATER 17	693.3	0.303	87.68	1.180
TC R1817AB HEATER 18	619.7	0.209	14.13	0.190
TC R0118BC HEATER 1	956.4	0.615	350.85	4.722
TC R0118CD HEATER 1	981.4	0.496	375.82	5.058
TC R0118DE HEATER 1	953.3	0.483	347.72	4.680
TC R0219BC HEATER 2	902.5	0.781	296.89	3.995
TC R0418BC HEATER 4	926.1	0.391	320.52	4.313
TC R0418CD HEATER 4	918.8	0.470	313.22	4.215
TC R0418DE HEATER 4	929.7	0.427	324.10	4.362
TC R0518BC HEATER 5	904.8	0.510	299.22	4.027
TC R0518CD HEATER 5	929.8	0.427	324.18	4.363
TC R0718BC HEATER 7	905.0	0.795	299.42	4.030
TC R0718CD HEATER 7	901.4	0.496	295.82	3.981
TC R0718DE HEATER 7	868.8	0.557	263.25	3.543
TC R0818BC HEATER 8	641.3	0.310	35.75	0.481
TC R1019BC HEATER 10	672.7	0.294	67.08	0.903
TC R1718BC HEATER 17	695.0	0.287	89.44	1.204
TC R1918DE HEATER 19	706.8	0.450	101.16	1.361

OPERATING DATA FOR FFM SERIES 2 TEST 6 RUN 103
WHICH WAS DONE ON 32172 952

DESCRIPTION	MEAN VALUE	STANDARD DEVIATION
HEATER 1 POWER KW	17.26	0.018
HEATER 8,18,19 POWER	0.0	0.0
HTR 12,13,14 POWER	-0.08	0.0
HTR 2,7,9,17 POWER	33.63	0.036
HTR 4,5,11,15 POWER	34.22	0.040
HTR 3,6,10,16 POWER	33.09	0.044
TOTAL POWER	117.14	0.089
TEST SECT FLOW, GPM	30.36	0.053
TEST SECT INLET PR	17.85	0.086
TEST SECT OUTLET PR	6.99	0.008
TOTAL FLOW, GPM	66.06	0.340
PUMP OUTLET PR, PSI	16.83	0.036
PUMP SPEED, RPM	878.56	0.896
BLOWER SPEED, RPM	391.42	0.746
AIR FLOW (200 F) CFM	1.87	0.050
TC 313 TEST SECT IN	603.72	0.287
TC 317 TEST SECT OUT	702.84	0.216
TC 300 PUMP OUTLET	603.26	0.121
TC 318 RADIATOR IN	702.41	2.092
TC 334 RADIATOR OUT	598.92	0.190
TC 336 PUMP INLET	603.15	0.221
TC 332 RAD AIR IN	88.55	0.281
TC 331 RAD AIR OUT	217.19	0.280

HEAT BALANCE ON SODIUM FLOWING THROUGH BUNDLE
HEAT SUPPLIED BY DUMMY FUEL RODS = 403652.88 BTU/HR
HEAT ADDED TO SODIUM = 405946.69 BTU/HR
PERCENT HEAT BALANCE = 100.57

RESULTS FOR UNGROUNDED JUNCTION THERMOCOUPLES
FFM SERIES 2 TEST 6 RUN 103 DONE ON 32172 952

DESCRIPTION	TEMP DEG F	STD DEV	RISE AB INLET T	NORMALIZED TEMP
TC 1504U CH 37	603.9	0.159	0.22	0.002
TC 1706U CH 21	640.1	0.063	36.40	0.369
TC 1807U CH 24	643.7	0.063	39.96	0.405
TC 1108U CH 31	608.4	0.190	4.72	0.048
TC 0409U CH 13	707.7	0.216	103.98	1.055
TC 0509U CH 3	753.8	0.063	150.06	1.523
TC 1009U CH 29	605.3	0.063	1.58	0.016
TC 1409U CH 17	620.2	0.320	16.45	0.167
TC 1609U CH 21	620.0	0.216	16.30	0.165
TC 1914U CH 24	610.1	0.063	6.36	0.065
TC 0815U CH 8	674.9	0.063	71.16	0.722
TC 1316U CH 35	628.9	0.240	25.14	0.255
TC 1516U CH 37	624.0	0.063	20.26	0.206
TC 0817U CH 9	702.4	0.372	98.70	1.001
TC 1217U CH 33	626.5	0.063	22.78	0.231
TC 1318U CH 34	630.3	0.063	26.58	0.270
TC 1718U CH 22	730.5	0.342	126.76	1.286
TC 1219U CH 32	621.8	0.303	18.10	0.184
TC 1819U CH 24	650.4	0.215	46.66	0.473
TC 1120U CH 31	630.9	0.840	27.19	0.276
TC 0421U CH 13	830.5	0.649	226.75	2.301
TC 0521U CH 3	872.0	0.730	268.26	2.722
TC 1021U CH 29	624.7	0.130	21.01	0.213
TC 1421U CH 17	661.5	0.465	57.79	0.586
TC 1621U CH 21	714.0	0.215	110.24	1.119

RESULTS FOR GROUNDED JUNCTION THERMOCOUPLES
FFM SERIES 2 TEST 6 RUN 103 DONE ON 32172 952

DESCRIPTION	TEMP DEG F	STD DEV	RISE AB INLET T	NORMALIZED TEMP
TC 0118C CH 3	893.1	0.411	289.39	2.936
TC 0618D CH 4	861.8	0.620	258.05	2.618
TC 0618C CH 19	808.4	0.562	204.64	2.076
TC 0219A HEATER 2	853.7	0.870	249.94	2.536
TC 0219B CH 10	810.8	0.609	207.04	2.101
TC 0919A HTR 9 EXT	702.1	0.382	98.34	0.998
TC 0919B CH 29	674.3	0.174	70.53	0.716
TC 0718C CH 5	900.1	0.765	296.38	3.007
TC 0718D CH 6	881.3	0.765	277.63	2.817
TC 0319A HEATER 3	816.4	0.596	212.68	2.158
TC 0319B CH 12	773.2	0.578	169.47	1.719

RESULTS FOR DUCT WALL THERMOCOUPLES
FFM SERIES 2 TEST 6 RUN 103 DONE ON 32172 952

DESCRIPTION	TEMP DEG F	STD DEV	RISE AB INLET T	NORMALIZED TEMP
TC D0B04 DUCT B	603.5	0.239	-0.24	-0.002
TC D0E04 DUCT E	603.9	0.063	0.14	0.001
TC D0F04 DUCT F	603.6	0.206	-0.15	-0.002
TC D0B08 DUCT B	603.8	0.063	0.06	0.001
TC D0D08 DUCT D	604.3	0.331	0.63	0.006
TC D0F08 DUCT F	605.4	0.063	1.68	0.017
TC D0B12 DUCT B	606.5	0.063	2.80	0.028
TC D0E12 DUCT E	608.3	0.193	4.63	0.047
TC D0F12 DUCT F	605.2	0.063	1.48	0.015
TC D0B16 DUCT B	626.2	0.287	22.50	0.228
TC D0D16 DUCT D	609.7	0.063	5.96	0.060
TC D0F16 DUCT F	612.6	0.063	8.88	0.090
TC D0D18 DUCT D	612.4	0.063	8.64	0.088
TC D0E18 DUCT E	616.9	0.063	13.18	0.134
TC DAB18 DUCT AB	619.7	0.240	15.94	0.162
TC DDE18 DUCT DE	612.8	0.063	9.06	0.092
TC DEF18 DUCT EF	611.5	0.190	7.74	0.079
TC D0F18 DUCT F	619.0	0.149	15.27	0.155
TC DFA18 DUCT FA	618.9	0.063	15.20	0.154
TC D0B21 DUCT B	618.4	0.130	14.70	0.149
TC D0D21 DUCT D	620.0	0.268	16.27	0.165
TC D0F21 DUCT F	630.9	0.130	27.16	0.276
TC D0B23 DUCT B	623.9	0.268	20.16	0.205
TC D0D23 DUCT D	625.7	0.292	21.99	0.223
TC D0F23 DUCT F	629.1	0.130	25.40	0.258

RESULTS FOR THERMOCOUPLES IN CHANNEL EXITS
FFM SERIES 2 TEST 6 RUN 103 DONE ON 32172 952

DESCRIPTION	TEMP DEG F	STD DEV	RISE AB INLET T	NORMALIZED TEMP
TC EC03 EXIT CH 3	775.7	0.882	171.96	1.745
TC EC16 EXIT CH 16	675.6	0.736	71.85	0.729
TC EC17 EXIT CH 17	648.3	0.532	44.57	0.452
TC EC34 EXIT CH 34	637.1	0.189	33.42	0.339
TC EC35 EXIT CH 35	638.1	0.174	34.38	0.349
TC EC36 EXIT CH 36	641.5	0.391	37.76	0.383
TC EC06 EXIT CH 6	787.1	0.265	183.34	1.860
TC EC08 EXIT CH 8	682.7	0.866	79.02	0.802
TC EC27 EXIT CH 27	647.5	0.061	43.80	0.444
TC EA36 EXIT ANN EF	645.6	0.759	41.86	0.425
TC EA27 EXIT ANN BC	653.3	0.626	49.61	0.503
TC EA28 EXIT ANN C	656.9	0.701	53.16	0.539

RESULTS FOR THERMOCOUPLES INSIDE HEATERS
FFM SERIES 2 TEST 6 RUN 103 DONE ON 32172 952

DESCRIPTION	TEMP DEG F	STD DEV	RISE AB INLET T	NORMALIZED TEMP
TC P0118AB HTR 1 INT	1003.6	0.747	399.86	4.057
TC P0219AB HTR 2 INT	948.7	0.567	344.98	3.500
TC P0418AB HTR 4 INT	1021.3	0.480	417.54	4.236
TC P0518AB HTR 5 INT	953.0	0.718	349.28	3.544
TC P1019AB HEATER 10	692.8	0.174	89.08	0.904
TC P1218AB HEATER 12	621.6	0.679	17.92	0.182
TC P1318DE HEATER 13	638.7	0.159	34.98	0.355
TC P1418AB HEATER 14	622.2	0.174	18.46	0.187
TC P1518AB HEATER 15	757.6	0.630	153.86	1.561
TC P1618AB HEATER 16	624.6	0.233	20.88	0.212
TC P1718AB HEATER 17	724.4	0.292	120.69	1.225
TC P1817AB HEATER 18	623.9	0.159	20.22	0.205
TC P0118BC HEATER 1	1017.2	0.618	413.49	4.195
TC P0118CD HEATER 1	1041.9	0.618	438.21	4.446
TC P0118DE HEATER 1	1014.0	0.618	410.31	4.163
TC P0219BC HEATER 2	963.7	0.514	359.96	3.652
TC P0418BC HEATER 4	981.5	0.527	377.74	3.833
TC P0418CD HEATER 4	974.6	0.342	370.84	3.763
TC P0418DE HEATER 4	980.0	0.504	376.26	3.818
TC P0518BC HEATER 5	957.6	0.607	353.92	3.591
TC P0518CD HEATER 5	989.3	0.421	385.62	3.913
TC P0718BC HEATER 7	955.7	0.783	352.00	3.571
TC P0718CD HEATER 7	950.1	0.645	346.36	3.514
TC P0718DE HEATER 7	909.0	0.624	305.26	3.097
TC P0818BC HEATER 8	651.6	0.359	47.88	0.486
TC P1019BC HEATER 10	702.2	0.454	98.47	0.999
TC P1718BC HEATER 17	726.6	0.463	122.90	1.247
TC P1918DE HEATER 19	734.8	0.408	131.05	1.330

OPERATING DATA FOR FFM SERIES 2 TEST 9 RUN 101
WHICH WAS DONE ON 30672 1345

DESCRIPTION	MEAN VALUE	STANDARD DEVIATION
HEATER 1 POWER KW	-0.03	0.0
HEATER 8,18,19 POWER	52.98	0.022
HTR 12,13,14 POWER	-0.10	0.022
HTR 2,7,9,17 POWER	-0.02	0.022
HTR 4,5,11,15 POWER	-0.09	0.018
HTR 3,6,10,16 POWER	-0.14	0.022
TOTAL POWER	51.59	0.131
TEST SECT FLOW, GPM	54.64	0.109
TEST SECT INLET PR	34.15	0.103
TEST SECT OUTLET PR	8.74	0.046
TOTAL FLOW, GPM	112.92	1.195
PUMP OUTLET PR, PSI	35.97	0.057
PUMP SPEED, RPM	1509.80	0.447
BLOWER SPEED, RPM	119.14	0.799
AIR FLOW (200 F) CFM	1.06	0.012
TC 313 TEST SECT IN	607.47	0.095
TC 317 TEST SECT OUT	631.79	0.280
TC 300 PUMP OUTLET	607.77	0.250
TC 318 RADIATOR IN	632.55	0.095
TC 334 RADIATOR OUT	607.09	0.763
TC 336 PUMP INLET	607.74	0.367
TC 332 RAD AIR IN	94.69	0.255
TC 331 RAD AIR OUT	323.61	0.509

HEAT BALANCE ON SODIUM FLOWING THROUGH BUNDLE
HEAT SUPPLIED BY DUMMY FUEL RODS = 180926.63 BTU/HR
HEAT ADDED TO SODIUM = 179089.81 BTU/HR
PERCENT HEAT BALANCE = 98.98

RESULTS FOR UNGROUNDED JUNCTION THERMOCOUPLES
FFM SERIES 2 TEST 9 RUN 101 DONE ON 30672 1345

DESCRIPTION	TEMP DEG F	STD DEV	RISE AB INLET T	NORMALIZED TEMP
TC 1504U CH 37	607.6	0.095	0.10	0.004
TC 1706U CH 21	608.1	0.270	0.66	0.027
TC 1807U CH 24	669.7	0.439	62.26	2.534
TC 1108U CH 31	607.3	0.215	-0.16	-0.007
TC 0409U CH 13	607.3	0.095	-0.22	-0.009
TC 0509U CH 3	607.3	0.095	-0.20	-0.008
TC 1009U CH 29	607.3	0.280	-0.20	-0.008
TC 1409U CH 17	607.7	0.256	0.27	0.011
TC 1609U CH 21	608.3	0.320	0.86	0.035
TC 1914U CH 24	679.1	0.275	71.68	2.917
TC 0815U CH 8	712.1	0.355	104.64	4.259
TC 1316U CH 35	617.8	0.250	10.28	0.418
TC 1516U CH 37	620.7	0.256	13.21	0.538
TC 0817U CH 9	677.9	0.114	70.39	2.865
TC 1217U CH 33	612.9	0.108	5.40	0.220
TC 1318U CH 34	616.4	0.256	8.91	0.363
TC 1718U CH 22	623.4	0.182	15.92	0.648
TC 1219U CH 32	614.6	0.508	7.16	0.291
TC 1819U CH 24	719.1	0.454	111.59	4.542
TC 1120U CH 31	609.7	0.684	2.21	0.090
TC 0421U CH 13	608.5	0.577	1.00	0.041
TC 0521U CH 3	608.6	0.470	1.16	0.047
TC 1021U CH 29	608.3	0.579	0.82	0.033
TC 1421U CH 17	615.1	0.584	7.68	0.313
TC 1621U CH 21	624.0	0.508	16.56	0.674

RESULTS FOR GROUNDED JUNCTION THERMOCOUPLES
FFM SERIES 2 TEST 9 RUN 101 DONE ON 30672 1345

DESCRIPTION	TEMP DEG F	STD DEV	RISE AB INLET T	NORMALIZED TEMP
TC 0118C CH 3	608.7	0.685	1.22	0.050
TC 0618D CH 4	608.9	0.575	1.42	0.058
TC 0618C CH 19	608.5	0.584	1.08	0.044
TC 0219A HEATER 2	619.9	0.398	12.46	0.507
TC 0219B CH 10	618.0	0.550	10.55	0.429
TC 0919A HTR 9 EXT	611.3	0.757	3.80	0.155
TC 0919B CH 29	609.4	0.612	1.93	0.079
TC 0718C CH 5	620.4	0.511	12.96	0.527
TC 0718D CH 6	621.1	0.790	13.66	0.556
TC 0319A HEATER 3	608.4	0.533	0.95	0.039
TC 0319B CH 12	608.2	0.584	0.70	0.028

RESULTS FOR DUCT WALL THERMOCOUPLES
FFM SERIES 2 TEST 9 RUN 101 DONE ON 30672 1345

DESCRIPTION	TEMP DEG F	STD DEV	RISE AB INLET T	NORMALIZED TEMP
TC DOB04 DUCT B	622.8	0.858	15.33	0.624
TC DOE04 DUCT E	607.3	0.150	-0.22	-0.009
TC DOF04 DUCT F	607.7	0.108	0.20	0.008
TC DOB08 DUCT B	616.9	0.197	9.45	0.385
TC DOD08 DUCT D	606.7	0.182	-0.76	-0.031
TC DOF08 DUCT F	607.7	0.182	0.24	0.010
TC DOB12 DUCT B	633.3	0.312	25.83	1.051
TC DOE12 DUCT E	607.5	0.108	0.04	0.002
TC DOF12 DUCT F	626.4	0.120	18.89	0.769
TC DOB16 DUCT B	663.8	0.258	56.29	2.291
TC DOD16 DUCT D	607.5	0.294	-0.01	-0.000
TC DOF16 DUCT F	623.0	0.132	15.49	0.630
TC DOD18 DUCT D	608.6	0.203	1.16	0.047
TC DOE18 DUCT E	616.9	0.280	9.46	0.385
TC DAB18 DUCT AB	664.5	0.079	57.03	2.321
TC DDE18 DUCT DE	610.7	0.234	3.21	0.131
TC DEF18 DUCT EF	619.2	0.130	11.76	0.479
TC DOF18 DUCT F	623.5	0.250	16.00	0.651
TC DFA18 DUCT FA	630.5	0.287	23.05	0.938
TC DOB21 DUCT B	626.8	0.685	19.28	0.785
TC DOD21 DUCT D	609.8	0.649	2.34	0.095
TC DOF21 DUCT F	625.2	0.828	17.70	0.720
TC DOB23 DUCT B	637.5	0.311	30.08	1.224
TC DOD23 DUCT D	609.3	0.944	1.87	0.076
TC DOF23 DUCT F	645.8	0.454	38.30	1.559

RESULTS FOR THERMOCOUPLES IN CHANNEL EXITS
FFM SERIES 2 TEST 9 RUN 101 DONE ON 30672 1345

DESCRIPTION	TEMP DEG F	STD DEV	RISE AB INLET T	NORMALIZED TEMP
TC EC03 EXIT CH 3	609.4	0.584	1.96	0.080
TC EC16 EXIT CH 16	612.8	0.456	5.32	0.217
TC EC17 EXIT CH 17	617.0	0.393	9.58	0.390
TC EC34 EXIT CH 34	626.0	0.433	18.49	0.753
TC EC35 EXIT CH 35	625.0	0.448	17.56	0.715
TC EC36 EXIT CH 36	641.5	0.934	34.00	1.384
TC EC06 EXIT CH 6	636.2	0.750	28.72	1.169
TC EC08 EXIT CH 8	694.1	0.648	86.62	3.526
TC EC27 EXIT CH 27	623.5	0.622	16.01	0.652
TC EA36 EXIT ANN EF	637.3	0.525	29.85	1.215
TC EA27 EXIT ANN BC	630.6	0.410	23.10	0.940
TC EA28 EXIT ANN C	622.0	0.341	14.50	0.590

RESULTS FOR THERMOCOUPLES INSIDE HEATERS
FFM SERIES 2 TEST 9 RUN 101 DONE ON 30672 1345

DESCRIPTION	TEMP DEG F	STD DEV	RISE AB INLET T	NORMALIZED TEMP
TC R0118AB HTR 1 INT	609.4	0.294	1.93	0.079
TC R0219AB HTR 2 INT	650.0	0.575	42.58	1.733
TC R0418AB HTR 4 INT	608.3	0.508	0.80	0.033
TC R0518AB HTR 5 INT	608.2	0.508	0.70	0.028
TC R1019AB HEATER 10	609.0	0.579	1.50	0.061
TC R1218AB HEATER 12	616.2	5.170	8.74	0.356
TC R1318DE HEATER 13	614.3	0.677	6.88	0.280
TC R1418AB HEATER 14	621.2	0.454	13.76	0.560
TC R1518AB HEATER 15	609.0	0.700	1.58	0.064
TC R1618AB HEATER 16	628.7	0.703	21.23	0.864
TC R1718AB HEATER 17	625.9	0.470	18.44	0.751
TC R1817AB HEATER 18	820.3	0.841	212.85	8.663
TC R0118BC HEATER 1	609.2	0.565	1.71	0.070
TC R0118CD HEATER 1	609.1	0.466	1.67	0.068
TC R0118DE HEATER 1	608.8	0.412	1.31	0.053
TC R0219BC HEATER 2	638.9	0.478	31.46	1.280
TC R0418BC HEATER 4	606.5	0.248	-0.92	-0.037
TC R0418CD HEATER 4	607.6	0.426	0.15	0.006
TC R0418DE HEATER 4	607.4	0.336	-0.07	-0.003
TC R0518BC HEATER 5	607.8	0.565	0.38	0.015
TC R0518CD HEATER 5	607.9	0.525	0.44	0.018
TC R0718BC HEATER 7	634.0	0.741	26.57	1.081
TC R0718CD HEATER 7	635.9	0.390	28.43	1.157
TC R0718DE HEATER 7	655.9	0.397	48.43	1.971
TC R0818BC HEATER 8	838.8	0.545	231.34	9.416
TC R1019BC HEATER 10	607.8	0.565	0.28	0.011
TC R1718BC HEATER 17	627.2	0.622	19.71	0.802
TC R1918DE HEATER 19	811.8	0.525	204.29	8.315

OPERATING DATA FOR FFM SERIES 2 TEST 9 RUN 201
WHICH WAS DONE ON 30672 1417

DESCRIPTION	MEAN VALUE	STANDARD DEVIATION
HEATER 1 POWER KW	-0.03	0.0
HEATER 8,18,19 POWER	18.10	0.033
HTR 12,13,14 POWER	-0.09	0.018
HTR 2,7,9,17 POWER	17.12	0.018
HTR 4,5,11,15 POWER	-0.09	0.018
HTR 3,6,10,16 POWER	17.43	0.028
TOTAL POWER	51.92	0.196
TEST SECT FLOW, GPM	54.66	0.062
TEST SECT INLET PR	34.14	0.092
TEST SECT OUTLET PR	8.74	0.048
TOTAL FLOW, GPM	113.12	1.619
PUMP OUTLET PR, PSI	35.96	0.051
PUMP SPEED, RPM	1509.20	1.095
BLOWER SPEED, RPM	112.86	1.936
AIR FLOW (200 F) CFM	1.05	0.004
TC 313 TEST SECT IN	617.22	0.372
TC 317 TEST SECT OUT	641.45	0.504
TC 300 PUMP OUTLET	617.45	0.409
TC 318 RADIATOR IN	642.08	0.374
TC 334 RADIATOR OUT	616.68	0.836
TC 336 PUMP INLET	616.81	0.728
TC 332 RAD AIR IN	95.12	0.412
TC 331 RAD AIR OUT	330.63	3.843

HEAT BALANCE ON SODIUM FLOWING THROUGH BUNDLE
HEAT SUPPLIED BY DUMMY FUEL RODS = 179799.63 BTU/HR
HEAT ADDED TO SODIUM = 178016.38 BTU/HR
PERCENT HEAT BALANCE = 99.01

RESULTS FOR UNGROUNDED JUNCTION THERMOCOUPLES
FFM SERIES 2 TEST 9 RUN 201 DONE ON 30672 1417

DESCRIPTION	TEMP DEG F	STD DEV	RISE AB INLET T	NORMALIZED TEMP
TC 1504U CH 37	617.4	0.245	0.22	0.009
TC 1706U CH 21	617.2	0.443	-0.05	-0.002
TC 1807U CH 24	617.3	0.641	0.13	0.005
TC 1108U CH 31	618.6	0.568	1.43	0.058
TC 0409U CH 13	621.2	0.517	4.00	0.163
TC 0509U CH 3	617.0	0.520	-0.26	-0.011
TC 1009U CH 29	653.1	0.629	35.92	1.468
TC 1409U CH 17	617.2	0.435	-0.06	-0.002
TC 1609U CH 21	617.2	0.386	0.01	0.000
TC 1914U CH 24	652.2	0.343	34.99	1.430
TC 0815U CH 8	697.2	0.307	79.95	3.267
TC 1316U CH 35	619.0	0.372	1.74	0.071
TC 1516U CH 37	621.5	0.690	4.26	0.174
TC 0817U CH 9	713.8	0.487	96.63	3.948
TC 1217U CH 33	617.7	0.435	0.52	0.021
TC 1318U CH 34	619.1	0.494	1.86	0.076
TC 1718U CH 22	621.3	0.568	4.13	0.169
TC 1219U CH 32	618.4	0.318	1.23	0.050
TC 1819U CH 24	636.7	0.437	19.51	0.797
TC 1120U CH 31	620.6	0.513	3.35	0.137
TC 0421U CH 13	625.5	0.302	8.32	0.340
TC 0521U CH 3	618.3	0.491	1.04	0.042
TC 1021U CH 29	663.1	0.394	45.87	1.874
TC 1421U CH 17	619.2	0.325	2.02	0.083
TC 1621U CH 21	623.6	0.482	6.36	0.260

RESULTS FOR GROUNDED JUNCTION THERMOCOUPLES
FFM SERIES 2 TEST 9 RUN 201 DONE ON 30672 1417

DESCRIPTION	TEMP DEG F	STD DEV	RISE AB INLET T	NORMALIZED TEMP
TC 0118C CH 3	619.5	0.400	2.30	0.094
TC 0618D CH 4	617.9	0.302	0.64	0.026
TC 0618C CH 19	617.7	0.309	0.45	0.018
TC 0219A HEATER 2	675.0	0.482	57.78	2.361
TC 0219B CH 10	687.2	0.618	69.95	2.858
TC 0919A HTR 9 EXT	741.3	0.403	124.06	5.069
TC 0919B CH 29	724.8	0.612	107.60	4.397
TC 0718C CH 5	620.5	0.429	3.32	0.136
TC 0718D CH 6	620.2	0.526	3.02	0.123
TC 0319A HEATER 3	646.4	0.491	29.20	1.193
TC 0319B CH 12	651.1	0.487	33.86	1.384

RESULTS FOR DUCT WALL THERMOCOUPLES
FFM SERIES 2 TEST 9 RUN 201 DONE ON 30672 1417

DESCRIPTION	TEMP DEG F	STD DEV	RISE AB INLET T	NORMALIZED TEMP
TC DOB04 DUCT B	622.0	0.408	4.80	0.196
TC DOE04 DUCT E	617.2	0.221	-0.03	-0.001
TC DOF04 DUCT F	617.2	0.236	-0.04	-0.002
TC DOB08 DUCT B	632.4	0.466	15.20	0.621
TC DOD08 DUCT D	617.7	0.410	0.51	0.021
TC DOF08 DUCT F	617.3	0.293	0.05	0.002
TC DOB12 DUCT B	645.3	0.391	28.06	1.147
TC DOE12 DUCT E	616.8	0.536	-0.39	-0.016
TC DOF12 DUCT F	621.6	0.239	4.42	0.181
TC DOB16 DUCT B	653.0	0.375	35.76	1.461
TC DOD16 DUCT D	618.4	0.361	1.17	0.048
TC DOF16 DUCT F	623.0	0.357	5.81	0.237
TC DOD18 DUCT D	619.2	0.418	1.95	0.080
TC DOE18 DUCT E	619.1	0.506	1.87	0.076
TC DAB18 DUCT AB	638.1	0.357	20.92	0.855
TC DDE18 DUCT DE	618.3	0.307	1.13	0.046
TC DEF18 DUCT EF	620.1	0.245	2.90	0.118
TC DOF18 DUCT F	623.6	0.443	6.34	0.259
TC DFA18 DUCT FA	627.3	0.357	10.08	0.412
TC DOB21 DUCT B	658.9	0.394	41.65	1.702
TC DOD21 DUCT D	621.7	0.307	4.51	0.184
TC DOF21 DUCT F	625.0	0.482	7.82	0.320
TC DOB23 DUCT B	665.7	0.437	48.44	1.979
TC DOD23 DUCT D	625.1	0.348	7.87	0.322
TC DOF23 DUCT F	629.0	0.286	11.79	0.482

RESULTS FOR THERMOCOUPLES IN CHANNEL EXITS
FFM SERIES 2 TEST 9 RUN 201 DONE ON 30672 1417

DESCRIPTION	TEMP DEG F	STD DEV	RISE AB INLET T	NORMALIZED TEMP
TC EC03 EXIT CH 3	618.4	0.332	1.14	0.047
TC EC16 EXIT CH 16	620.9	0.491	3.64	0.149
TC EC17 EXIT CH 17	621.5	0.427	4.27	0.174
TC EC34 EXIT CH 34	624.4	0.302	7.20	0.294
TC EC35 EXIT CH 35	626.7	0.511	9.47	0.387
TC EC36 EXIT CH 36	633.3	0.651	16.10	0.658
TC EC06 EXIT CH 6	627.3	0.348	10.09	0.412
TC EC08 EXIT CH 8	672.4	0.867	55.20	2.256
TC EC27 EXIT CH 27	648.4	1.003	31.22	1.276
TC EA36 EXIT ANN EF	630.6	0.755	13.38	0.547
TC EA27 EXIT ANN BC	654.4	0.880	37.22	1.521
TC EA28 EXIT ANN C	633.8	1.022	16.61	0.679

RESULTS FOR THERMOCOUPLES INSIDE HEATERS
FFM SERIES 2 TEST 9 RUN 201 DONE ON 30672 1417

DESCRIPTION	TEMP DEG F	STD DEV	RISE AB INLET T	NORMALIZED TEMP
TC R0118AB HTR 1 INT	618.2	0.411	1.00	0.041
TC R0219AB HTR 2 INT	651.8	0.429	34.54	1.411
TC R0418AB HTR 4 INT	620.6	0.439	3.39	0.139
TC R0518AB HTR 5 INT	618.3	0.491	1.12	0.046
TC R1019AB HEATER 10	822.3	225.608	205.07	8.380
TC R1218AB HEATER 12	618.7	1.178	1.49	0.061
TC R1318DE HEATER 13	618.8	0.511	1.53	0.063
TC R1418AB HEATER 14	620.8	0.470	3.57	0.146
TC R1518AB HEATER 15	617.8	0.433	0.57	0.023
TC R1618AB HEATER 16	628.4	0.394	11.17	0.456
TC R1718AB HEATER 17	621.4	0.429	4.22	0.172
TC R1817AB HEATER 18	639.4	0.427	22.14	0.905
TC R0118BC HEATER 1	618.7	0.845	1.49	0.061
TC R0118CD HEATER 1	618.9	0.641	1.65	0.067
TC R0118DE HEATER 1	621.6	0.833	4.34	0.177
TC R0219BC HEATER 2	643.3	0.600	26.10	1.066
TC R0418BC HEATER 4	617.8	1.077	0.56	0.023
TC R0418CD HEATER 4	618.4	0.785	1.14	0.047
TC R0418DE HEATER 4	617.8	0.626	0.63	0.026
TC R0518BC HEATER 5	617.3	0.770	0.10	0.004
TC R0518CD HEATER 5	617.3	0.867	0.06	0.002
TC R0718BC HEATER 7	627.7	0.822	10.49	0.429
TC R0718CD HEATER 7	629.8	0.700	12.57	0.514
TC R0718DE HEATER 7	651.3	0.827	34.06	1.392
TC R0818BC HEATER 8	898.3	0.669	281.09	11.486
TC R1019BC HEATER 10	814.5	91.138	197.25	8.060
TC R1718BC HEATER 17	619.8	0.860	2.63	0.107
TC R1918DE HEATER 19	667.3	0.639	50.03	2.044

OPERATING DATA FOR FFM SERIES 2 TEST 9 RUN 301
WHICH WAS DONE ON 30672 1450

DESCRIPTION	MEAN VALUE	STANDARD DEVIATION
HEATER 1 POWER KW	-0.03	0.004
HEATER 8,18,19 POWER	0.0	0.0
HTR 12,13,14 POWER	17.16	0.018
HTR 2,7,9,17 POWER	-0.02	0.022
HTR 4,5,11,15 POWER	17.69	0.018
HTR 3,6,10,16 POWER	17.40	0.018
TOTAL POWER	50.96	0.107
TEST SECT FLOW, GPM	54.47	0.057
TEST SECT INLET PR	34.32	0.123
TEST SECT OUTLET PR	8.70	0.062
TOTAL FLOW, GPM	112.82	0.597
PUMP OUTLET PR, PSI	35.97	0.056
PUMP SPEED, RPM	1509.00	1.000
BLOWER SPEED, RPM	124.44	0.522
AIR FLOW (200 F) CFM	1.06	0.009
TC 313 TEST SECT IN	620.21	0.529
TC 317 TEST SECT OUT	643.98	0.411
TC 300 PUMP OUTLET	619.24	0.472
TC 318 RADIATOR IN	644.61	0.511
TC 334 RADIATOR OUT	619.65	0.915
TC 336 PUMP INLET	619.76	0.488
TC 332 RAD AIR IN	95.48	0.411
TC 331 RAD AIR OUT	332.73	1.645

HEAT BALANCE ON SODIUM FLOWING THROUGH BUNDLE
HEAT SUPPLIED BY DUMMY FUEL RODS = 178433.63 BTU/HR
HEAT ADDED TO SODIUM = 173899.69 BTU/HR
PERCENT HEAT BALANCE = 97.46

RESULTS FOR UNGROUNDED JUNCTION THERMOCOUPLES
FFM SERIES 2 TEST 9 RUN 301 DONE ON 30672 1450

DESCRIPTION	TEMP DEG F	STD DEV	RISE AB INLET T	NORMALIZED TEMP
TC 1504U CH 37	620.1	0.624	-0.08	-0.003
TC 1706U CH 21	620.2	0.529	0.0	0.0
TC 1807U CH 24	620.4	0.813	0.15	0.006
TC 1108U CH 31	688.6	0.591	68.40	2.804
TC 0409U CH 13	668.1	0.495	47.90	1.964
TC 0509U CH 3	620.4	0.601	0.17	0.007
TC 1009U CH 29	669.0	0.525	48.79	2.000
TC 1409U CH 17	620.2	0.477	-0.03	-0.001
TC 1609U CH 21	620.3	0.649	0.04	0.002
TC 1914U CH 24	627.5	0.525	7.31	0.300
TC 0815U CH 8	624.6	0.614	4.39	0.180
TC 1316U CH 35	623.3	0.465	3.04	0.125
TC 1516U CH 37	620.5	0.410	0.30	0.012
TC 0817U CH 9	631.0	0.525	10.77	0.442
TC 1217U CH 33	666.4	0.551	46.16	1.893
TC 1318U CH 34	621.7	0.630	1.50	0.062
TC 1718U CH 22	621.3	0.529	1.04	0.043
TC 1219U CH 32	671.0	0.980	50.81	2.083
TC 1819U CH 24	623.9	1.078	3.66	0.150
TC 1120U CH 31	707.6	1.220	87.36	3.582
TC 0421U CH 13	667.8	0.855	47.58	1.951
TC 0521U CH 3	628.2	1.078	7.96	0.326
TC 1021U CH 29	704.7	1.103	84.47	3.463
TC 1421U CH 17	623.5	0.924	3.34	0.137
TC 1621U CH 21	621.9	1.078	1.68	0.069

RESULTS FOR GROUNDED JUNCTION THERMOCOUPLES
FFM SERIES 2 TEST 9 RUN 301 DONE ON 30672 1450

DESCRIPTION	TEMP DEG F	STD DEV	RISE AB INLET T	NORMALIZED TEMP
TC 0118C CH 3	629.5	1.201	9.33	0.383
TC 0618D CH 4	620.8	1.100	0.64	0.026
TC 0618C CH 19	620.8	1.216	0.54	0.022
TC 0219A HEATER 2	641.1	1.020	20.92	0.858
TC 0219B CH 10	645.9	0.988	25.71	1.054
TC 0919A HTR 9 EXT	686.0	0.961	65.75	2.696
TC 0919B CH 29	694.5	0.856	74.29	3.046
TC 0718C CH 5	620.7	0.988	0.47	0.019
TC 0718D CH 6	620.8	0.731	0.59	0.024
TC 0319A HEATER 3	703.9	1.347	83.72	3.433
TC 0319B CH 12	714.1	0.924	93.88	3.849

RESULTS FOR DUCT WALL THERMCCOUPLES
FFM SERIES 2 TEST 9 RUN 301 DONE ON 30672 1450

DESCRIPTION	TEMP DEG F	STD DEV	RISE AB INLET T	NORMALIZED TEMP
TC DOB04 DUCT B	620.3	0.477	0.07	0.003
TC DOE04 DUCT E	620.2	0.438	-0.02	-0.001
TC DOF04 DUCT F	620.5	0.632	0.32	0.013
TC DOB08 DUCT B	626.7	0.813	6.52	0.267
TC DOD08 DUCT D	637.6	0.602	17.36	0.712
TC DOF08 DUCT F	620.3	0.664	0.07	0.003
TC DOB12 DUCT B	627.2	0.693	7.00	0.287
TC DOE12 DUCT E	623.2	0.410	2.98	0.122
TC DOF12 DUCT F	620.3	0.529	0.08	0.003
TC DOB16 DUCT B	626.5	0.477	6.31	0.259
TC DOD16 DUCT D	634.4	0.644	14.17	0.581
TC DOF16 DUCT F	621.3	0.657	1.10	0.045
TC DOD18 DUCT D	637.3	0.685	17.10	0.701
TC DOE18 DUCT E	623.4	0.664	3.17	0.130
TC DAB18 DUCT AB	624.7	0.584	4.50	0.185
TC DDE18 DUCT DE	628.7	0.385	8.53	0.350
TC DEF18 DUCT EF	622.2	0.378	2.00	0.082
TC DOF18 DUCT F	621.4	0.529	1.20	0.049
TC DFA18 DUCT FA	623.2	0.477	3.03	0.124
TC DOB21 DUCT B	658.9	0.988	38.70	1.587
TC DOD21 DUCT D	658.3	1.103	38.11	1.563
TC DOF21 DUCT F	622.5	0.978	2.29	0.094
TC DOB23 DUCT B	651.9	1.076	31.65	1.298
TC DOD23 DUCT D	664.6	1.298	44.38	1.820
TC DOF23 DUCT F	624.3	1.071	4.05	0.166

RESULTS FOR THERMOCOUPLES IN CHANNEL EXITS
FFM SERIES 2 TEST 9 RUN 301 DONE ON 30672 1450

DESCRIPTION	TEMP DEG F	STD DEV	RISE AB INLET T	NORMALIZED TEMP
TC EC03 EXIT CH 3	626.2	1.079	5.99	0.246
TC EC16 EXIT CH 16	624.7	0.980	4.45	0.182
TC EC17 EXIT CH 17	622.4	1.105	2.20	0.090
TC EC34 EXIT CH 34	625.3	1.383	5.13	0.210
TC EC35 EXIT CH 35	623.7	1.071	3.45	0.141
TC EC36 EXIT CH 36	625.7	0.983	5.48	0.225
TC EC06 EXIT CH 6	626.0	1.221	5.81	0.238
TC EC08 EXIT CH 8	635.9	0.974	15.67	0.642
TC EC27 EXIT CH 27	658.5	0.615	38.34	1.572
TC EA36 EXIT ANN EF	625.0	0.580	4.78	0.196
TC EA27 EXIT ANN BC	656.3	0.731	36.14	1.482
TC EA28 EXIT ANN C	651.4	0.625	31.17	1.278

RESULTS FOR THERMOCOUPLES INSIDE HEATERS
FFM SERIES 2 TEST 9 RUN 301 DONE ON 30672 1450

DESCRIPTION	TEMP DEG F	STD DEV	RISE AB INLET T	NORMALIZED TEMP
TC R0118AB HTR 1 INT	621.6	0.644	1.39	0.057
TC R0219AB HTR 2 INT	622.5	0.980	2.30	0.094
TC R0418AB HTR 4 INT	646.6	0.978	26.37	1.081
TC R0518AB HTR 5 INT	627.8	1.226	7.60	0.312
TC R1019AB HEATER 10	803.8	57.621	183.64	7.529
TC R1218AB HEATER 12	789.5	0.867	169.28	6.941
TC R1318DE HEATER 13	627.5	1.098	7.27	0.298
TC R1418AB HEATER 14	620.8	0.980	0.56	0.023
TC R1518AB HEATER 15	620.4	1.103	0.22	0.009
TC R1618AB HEATER 16	623.2	1.201	3.01	0.123
TC R1718AB HEATER 17	621.1	1.221	0.94	0.039
TC R1817AB HEATER 18	625.2	0.980	5.00	0.205
TC R0118BC HEATER 1	625.1	0.584	4.91	0.201
TC R0118CD HEATER 1	625.6	0.624	5.42	0.222
TC R0118DE HEATER 1	634.8	0.692	14.57	0.597
TC R0219BC HEATER 2	621.9	0.501	1.74	0.071
TC R0418BC HEATER 4	641.6	0.775	21.39	0.877
TC R0418CD HEATER 4	640.8	0.598	20.56	0.843
TC R0418DE HEATER 4	640.2	0.393	19.98	0.819
TC R0518BC HEATER 5	626.2	0.584	6.02	0.247
TC R0518CD HEATER 5	623.5	0.776	3.32	0.136
TC R0718BC HEATER 7	619.9	0.586	-0.34	-0.014
TC R0718CD HEATER 7	620.1	0.584	-0.08	-0.003
TC R0718DE HEATER 7	620.5	0.722	0.31	0.013
TC R0818BC HEATER 8	642.1	0.501	21.90	0.898
TC R1019BC HEATER 10	790.5	81.843	170.34	6.984
TC R1718BC HEATER 17	620.9	0.776	0.72	0.030
TC R1918DE HEATER 19	623.9	0.584	3.69	0.151

OPERATING DATA FOR FFM SERIES 2 TEST 9 RUN 401
WHICH WAS DONE ON 30772 850

DESCRIPTION	MEAN VALUE	STANDARD DEVIATION
HEATER 1 POWER KW	-0.03	0.005
HEATER 8,18,19 POWER	0.0	0.0
HTR 12,13,14 POWER	52.07	0.016
HTR 2,7,9,17 POWER	-0.04	0.0
HTR 4,5,11,15 POWER	-0.09	0.016
HTR 3,6,10,16 POWER	-0.13	0.016
TOTAL POWER	50.09	0.098
TEST SECT FLOW, GPM	53.89	0.102
TEST SECT INLET PR	33.79	0.089
TEST SECT OUTLET PR	8.65	0.072
TOTAL FLOW, GPM	112.95	1.272
PUMP OUTLET PR, PSI	35.44	0.054
PUMP SPEED, RPM	1493.83	0.983
BLOWER SPEED, RPM	122.10	0.518
AIR FLOW (200 F) CFM	1.05	0.014
TC 313 TEST SECT IN	612.80	0.435
TC 317 TEST SECT OUT	636.67	0.376
TC 300 PUMP OUTLET	613.18	0.388
TC 318 RADIATOR IN	636.91	0.665
TC 334 RADIATOR OUT	613.49	0.334
TC 336 PUMP INLET	613.07	0.514
TC 332 RAD AIR IN	97.89	1.320
TC 331 RAD AIR OUT	365.73	1.495

HEAT BALANCE ON SODIUM FLOWING THROUGH BUNDLE
HEAT SUPPLIED BY DUMMY FUEL RODS = 177819.00 BTU/HR
HEAT ADDED TO SODIUM = 173108.56 BTU/HR
PERCENT HEAT BALANCE = 97.35

RESULTS FOR UNGROUNDED JUNCTION THERMOCOUPLES
FFM SERIES 2 TEST 9 RUN 401 DONE ON 30772 850

DESCRIPTION	TEMP DEG F	STD DEV	RISE AB INLET T	NORMALIZED TEMP
TC 1504U CH 37	612.4	0.450	-0.36	-0.015
TC 1706U CH 21	612.4	0.548	-0.44	-0.018
TC 1807U CH 24	612.7	0.523	-0.12	-0.005
TC 1108U CH 31	632.1	0.560	19.35	0.789
TC 0409U CH 13	622.8	0.354	10.00	0.408
TC 0509U CH 3	624.6	0.362	11.83	0.482
TC 1009U CH 29	622.8	0.450	9.96	0.406
TC 1409U CH 17	692.2	0.524	79.37	3.237
TC 1609U CH 21	612.4	0.723	-0.44	-0.018
TC 1914U CH 24	612.8	0.524	-0.03	-0.001
TC 0815U CH 8	613.1	0.582	0.28	0.011
TC 1316U CH 35	699.2	0.349	86.37	3.522
TC 1516U CH 37	613.9	0.499	1.06	0.043
TC 0817U CH 9	613.7	0.406	0.89	0.036
TC 1217U CH 33	696.2	0.499	83.36	3.400
TC 1318U CH 34	674.3	0.587	61.55	2.510
TC 1718U CH 22	612.9	0.407	0.06	0.002
TC 1219U CH 32	700.4	0.807	87.65	3.575
TC 1819U CH 24	612.8	0.660	0.0	0.0
TC 1120U CH 31	662.5	0.584	49.68	2.026
TC 0421U CH 13	649.6	0.705	36.81	1.501
TC 0521U CH 3	647.4	0.545	34.56	1.409
TC 1021U CH 29	655.1	0.865	42.26	1.724
TC 1421U CH 17	729.4	0.584	116.59	4.755
TC 1621U CH 21	612.6	0.569	-0.16	-0.007

RESULTS FOR GROUNDED JUNCTION THERMOCOUPLES
FFM SERIES 2 TEST 9 RUN 401 DONE ON 30772 850

DESCRIPTION	TEMP DEG F	STD DEV	RISE AB INLET T	NORMALIZED TEMP
TC 0118C CH 3	630.1	0.539	17.33	0.707
TC 0618D CH 4	622.9	0.661	10.15	0.414
TC 0618C CH 19	619.9	0.594	7.08	0.289
TC 0219A HEATER 2	613.7	0.677	0.88	0.036
TC 0219B CH 10	613.8	0.549	0.99	0.040
TC 0919A HTR 9 EXT	625.1	0.593	12.35	0.504
TC 0919B CH 29	628.9	0.590	16.11	0.657
TC 0718C CH 5	612.7	0.832	-0.13	-0.005
TC 0718D CH 6	613.0	0.892	0.19	0.008
TC 0319A HEATER 3	628.9	0.444	16.07	0.655
TC 0319B CH 12	629.4	0.545	16.59	0.677

RESULTS FOR DUCT WALL THERMOCOUPLES
FFM SERIES 2 TEST 9 RUN 401 DONE ON 30772 850

DESCRIPTION	TEMP DEG F	STD DEV	RISE AB INLET T	NORMALIZED TEMP
TC DOB04 DUCT B	611.9	0.640	-0.93	-0.038
TC DOE04 DUCT E	619.1	0.709	6.31	0.257
TC DOF04 DUCT F	612.2	0.450	-0.56	-0.023
TC DOB08 DUCT B	611.8	0.590	-0.98	-0.040
TC DOD08 DUCT D	628.2	0.699	15.43	0.629
TC DOF08 DUCT F	615.1	0.395	2.28	0.093
TC DOB12 DUCT B	612.8	0.538	-0.05	-0.002
TC DOE12 DUCT E	642.4	0.761	29.56	1.206
TC DOF12 DUCT F	613.9	0.401	1.09	0.044
TC DOB16 DUCT B	612.9	0.490	0.08	0.003
TC DOD16 DUCT D	649.7	0.697	36.91	1.505
TC DOF16 DUCT F	615.2	0.526	2.43	0.099
TC DOD18 DUCT D	642.6	0.741	29.85	1.217
TC DOE18 DUCT E	643.1	0.420	30.26	1.234
TC DAB18 DUCT AB	611.7	0.659	-1.09	-0.044
TC DDE18 DUCT DE	641.9	0.590	29.13	1.188
TC DEF18 DUCT EF	631.5	0.627	18.67	0.761
TC DOF18 DUCT F	615.6	0.606	2.84	0.116
TC DFA18 DUCT FA	613.4	0.269	0.59	0.024
TC DOB21 DUCT B	622.8	0.929	10.01	0.408
TC DOD21 DUCT D	649.9	0.548	37.08	1.512
TC DOF21 DUCT F	616.3	1.057	3.47	0.142
TC DOB23 DUCT B	624.1	0.524	11.28	0.460
TC DOD23 DUCT D	655.6	0.424	42.80	1.746
TC DOF23 DUCT F	614.4	0.731	1.62	0.066

RESULTS FOR THERMOCOUPLES IN CHANNEL EXITS
FFM SERIES 2 TEST 9 RUN 401 DONE ON 30772 850

DESCRIPTION	TEMP DEG F	STD DEV	RISE AB INLET T	NORMALIZED TEMP
TC EC03 EXIT CH 3	645.5	0.292	32.72	1.334
TC EC16 EXIT CH 16	667.3	0.413	54.52	2.224
TC EC17 EXIT CH 17	618.7	0.524	5.89	0.240
TC EC34 EXIT CH 34	663.6	0.604	50.77	2.071
TC EC35 EXIT CH 35	620.0	0.654	7.22	0.294
TC EC36 EXIT CH 36	619.8	0.840	6.98	0.285
TC EC06 EXIT CH 6	613.4	0.643	0.58	0.024
TC EC08 EXIT CH 8	628.6	0.381	15.81	0.645
TC EC27 EXIT CH 27	643.4	0.468	30.62	1.249
TC EA36 EXIT ANN EF	625.8	0.646	12.96	0.529
TC EA27 EXIT ANN BC	640.3	0.210	27.51	1.122
TC EA28 EXIT ANN C	643.5	0.453	30.70	1.252

RESULTS FOR THERMOCOUPLES INSIDE HEATERS
FFM SERIES 2 TEST 9 RUN 401 DONE ON 30772 850

DESCRIPTION	TEMP DEG F	STD DEV	RISE AB INLET T	NORMALIZED TEMP
TC R0118AB HTR 1 INT	620.9	0.538	8.08	0.330
TC R0219AB HTR 2 INT	612.9	0.498	0.11	0.004
TC R0418AB HTR 4 INT	632.3	0.607	19.50	0.795
TC R0518AB HTR 5 INT	643.6	0.722	30.78	1.255
TC R1019AB HEATER 10	621.5	0.615	8.66	0.353
TC R1218AB HEATER 12	812.8	0.884	200.03	8.158
TC R1318DE HEATER 13	872.8	0.563	260.03	10.605
TC R1418AB HEATER 14	832.5	0.687	219.68	8.959
TC R1518AB HEATER 15	619.8	0.511	7.01	0.286
TC R1618AB HEATER 16	612.2	0.598	-0.57	-0.023
TC R1718AB HEATER 17	612.2	0.539	-0.63	-0.026
TC R1817AB HEATER 18	612.8	0.574	0.02	0.001
TC R0118BC HEATER 1	627.0	0.425	14.16	0.578
TC R0118CD HEATER 1	627.3	0.419	14.48	0.591
TC R0118DE HEATER 1	625.3	0.242	12.47	0.509
TC R0219BC HEATER 2	613.3	0.326	0.53	0.022
TC R0418BC HEATER 4	635.7	0.315	22.86	0.932
TC R0418CD HEATER 4	636.0	0.444	23.22	0.947
TC R0418DE HEATER 4	650.4	0.525	37.64	1.535
TC R0518BC HEATER 5	642.8	0.444	29.98	1.223
TC R0518CD HEATER 5	630.7	0.296	17.89	0.730
TC R0718BC HEATER 7	613.2	0.535	0.36	0.015
TC R0718CD HEATER 7	613.2	0.426	0.39	0.016
TC R0718DE HEATER 7	612.7	0.277	-0.13	-0.005
TC R0818BC HEATER 8	617.1	0.589	4.26	0.174
TC R1019BC HEATER 10	625.5	0.522	12.74	0.520
TC R1718BC HEATER 17	613.2	0.395	0.42	0.017
TC R1918DE HEATER 19	613.5	0.344	0.74	0.030

OPERATING DATA FOR FFM SERIES 2 TEST 9 RUN 501
WHICH WAS DONE ON 30772 940

DESCRIPTION	MEAN VALUE	STANDARD DEVIATION
HEATER 1 POWER KW	-0.04	0.005
HEATER 8,18,19 POWER	0.0	0.0
HTR 12,13,14 POWER	17.54	0.018
HTR 2,7,9,17 POWER	-0.04	0.0
HTR 4,5,11,15 POWER	17.60	0.0
HTR 3,6,10,16 POWER	17.59	0.0
TOTAL POWER	51.49	0.0
TEST SECT FLOW, GPM	53.85	0.093
TEST SECT INLET PR	33.93	0.041
TEST SECT OUTLET PR	8.70	0.025
TOTAL FLOW, GPM	110.94	1.524
PUMP OUTLET PR, PSI	35.59	0.066
PUMP SPEED, RPM	1497.00	0.707
BLOWER SPEED, RPM	157.66	0.873
AIR FLOW (200 F) CFM	1.05	0.013
TC 313 TEST SECT IN	593.39	0.715
TC 317 TEST SECT OUT	618.59	0.797
TC 300 PUMP OUTLET	593.88	0.908
TC 318 RADIATOR IN	619.62	1.087
TC 334 RADIATOR OUT	591.87	0.913
TC 336 PUMP INLET	593.61	1.009
TC 332 RAD AIR IN	93.36	0.161
TC 331 RAD AIR OUT	325.81	3.000

HEAT BALANCE ON SODIUM FLOWING THROUGH BUNDLE
HEAT SUPPLIED BY DUMMY FUEL RODS = 180072.88 BTU/HR
HEAT ADDED TO SODIUM = 183578.88 BTU/HR
PERCENT HEAT BALANCE = 101.95

RESULTS FOR UNGROUNDED JUNCTION THERMOCOUPLES
FFM SERIES 2 TEST 9 RUN 501 DONE ON 30772 940

DESCRIPTION	TEMP DEG F	STD DEV	RISE AB INLET T	NORMALIZED TEMP
TC 1504U CH 37	628.5	0.960	35.14	1.422
TC 1706U CH 21	602.4	0.929	9.02	0.365
TC 1807U CH 24	593.7	0.873	0.28	0.011
TC 1108U CH 31	594.6	0.873	1.23	0.050
TC 0409U CH 13	593.4	0.822	0.0	0.0
TC 0509U CH 3	602.1	1.047	8.71	0.352
TC 1009U CH 29	593.9	0.909	0.47	0.019
TC 1409U CH 17	658.3	1.003	64.88	2.625
TC 1609U CH 21	666.7	1.019	73.28	2.965
TC 1914U CH 24	593.3	0.877	-0.06	-0.002
TC 0815U CH 8	593.3	0.909	-0.09	-0.004
TC 1316U CH 35	637.0	0.909	43.62	1.765
TC 1516U CH 37	673.7	1.003	80.34	3.250
TC 0817U CH 9	593.4	0.909	0.06	0.002
TC 1217U CH 33	630.9	0.929	37.52	1.518
TC 1318U CH 34	640.3	1.003	46.96	1.900
TC 1718U CH 22	615.5	1.253	22.09	0.894
TC 1219U CH 32	634.3	0.594	40.88	1.654
TC 1819U CH 24	594.2	0.340	0.79	0.032
TC 1120U CH 31	615.1	0.472	21.67	0.877
TC 0421U CH 13	598.7	0.509	5.33	0.216
TC 0521U CH 3	617.1	0.545	23.76	0.961
TC 1021U CH 29	615.8	0.594	22.44	0.908
TC 1421U CH 17	696.8	0.498	103.40	4.183
TC 1621U CH 21	663.4	0.708	70.04	2.833

RESULTS FOR GROUNDED JUNCTION THERMOCOUPLES
FFM SERIES 2 TEST 9 RUN 501 DONE ON 30772 940

DESCRIPTION	TEMP DEG F	STD DEV	RISE AB INLET T	NORMALIZED TEMP
TC 0118C CH 3	603.4	0.567	10.00	0.405
TC 0618D CH 4	622.0	0.594	28.66	1.159
TC 0618C CH 19	651.3	0.585	57.93	2.344
TC 0219A HEATER 2	594.7	0.574	1.29	0.052
TC 0219B CH 10	594.3	0.769	0.91	0.037
TC 0919A HTR 9 EXT	595.0	0.543	1.57	0.064
TC 0919B CH 29	595.2	0.656	1.80	0.073
TC 0718C CH 5	595.9	0.727	2.47	0.100
TC 0718D CH 6	596.5	0.926	3.16	0.128
TC 0319A HEATER 3	595.2	0.509	1.78	0.072
TC 0319B CH 12	594.7	0.340	1.35	0.055

RESULTS FOR DUCT WALL THERMOCOUPLES
FFM SERIES 2 TEST 9 RUN 501 DONE ON 30772 940

DESCRIPTION	TEMP DEG F	STD DEV	RISE AB INLET T	NORMALIZED TEMP
TC DOB04 DUCT B	593.6	0.740	0.25	0.010
TC DOE04 DUCT E	600.1	0.488	6.70	0.271
TC DOF04 DUCT F	601.9	0.712	8.52	0.345
TC DOB08 DUCT B	594.0	0.965	0.65	0.026
TC DOD08 DUCT D	595.1	0.574	1.70	0.069
TC DOF08 DUCT F	622.1	0.703	28.70	1.161
TC DOB12 DUCT B	593.7	0.792	0.30	0.012
TC DOE12 DUCT E	625.5	0.711	32.14	1.300
TC DOF12 DUCT F	604.0	0.873	10.61	0.429
TC DOB16 DUCT B	593.4	0.711	0.06	0.002
TC DOD16 DUCT D	615.3	0.858	21.89	0.886
TC DOF16 DUCT F	625.3	0.683	31.86	1.289
TC DOD18 DUCT D	617.5	0.699	24.13	0.976
TC DOE18 DUCT E	629.2	0.841	35.83	1.450
TC DAB18 DUCT AB	595.1	0.578	1.74	0.070
TC DDE18 DUCT DE	618.2	0.686	24.77	1.002
TC DEF18 DUCT EF	633.1	0.862	39.67	1.605
TC DOF18 DUCT F	635.8	0.841	42.46	1.718
TC DFA18 DUCT FA	624.6	0.822	31.23	1.263
TC DOB21 DUCT B	595.5	0.239	2.11	0.085
TC DOD21 DUCT D	613.6	0.367	20.24	0.819
TC DOF21 DUCT F	658.9	0.439	65.56	2.652
TC DOB23 DUCT B	596.7	0.439	3.28	0.133
TC DOD23 DUCT D	613.5	0.512	20.15	0.815
TC DOF23 DUCT F	657.9	0.486	64.53	2.611

RESULTS FOR THERMOCOUPLES IN CHANNEL EXITS
FFM SERIES 2 TEST 9 RUN 501 DONE ON 30772 940

DESCRIPTION	TEMP DEG F	STD DEV	RISE AB INLET T	NORMALIZED TEMP
TC EC03 EXIT CH 3	628.3	0.654	34.87	1.411
TC EC16 EXIT CH 16	635.4	0.704	42.00	1.699
TC EC17 EXIT CH 17	655.5	0.367	62.09	2.512
TC EC34 EXIT CH 34	672.1	0.560	78.74	3.185
TC EC35 EXIT CH 35	668.7	0.763	75.28	3.045
TC EC36 EXIT CH 36	654.3	0.815	60.95	2.466
TC EC06 EXIT CH 6	594.7	0.436	1.35	0.055
TC EC08 EXIT CH 8	596.6	0.957	3.19	0.129
TC EC27 EXIT CH 27	613.8	1.167	20.38	0.824
TC EA36 EXIT ANN EF	638.5	2.460	45.15	1.827
TC EA27 EXIT ANN BC	613.0	0.782	19.65	0.795
TC EA28 EXIT ANN C	624.9	0.703	31.56	1.277

RESULTS FOR THERMOCOUPLES INSIDE HEATERS
FFM SERIES 2 TEST 9 RUN 501 DONE ON 30772 940

DESCRIPTION	TEMP DEG F	STD DEV	RISE AB INLET T	NORMALIZED TEMP
TC R0118AB HTR 1 INT	601.5	1.035	8.11	0.328
TC R0219AB HTR 2 INT	594.2	0.654	0.85	0.034
TC R0418AB HTR 4 INT	599.8	0.363	6.43	0.260
TC R0518AB HTR 5 INT	611.5	0.594	18.14	0.734
TC R1019AB HEATER 10	595.4	0.601	2.06	0.083
TC R1218AB HEATER 12	628.5	0.477	35.15	1.422
TC R1318DE HEATER 13	636.8	0.442	43.39	1.755
TC R1418AB HEATER 14	840.0	0.737	246.63	9.977
TC R1518AB HEATER 15	796.2	0.307	202.82	8.205
TC R1618AB HEATER 16	884.3	0.740	290.86	11.767
TC R1718AB HEATER 17	613.9	0.381	20.55	0.831
TC R1817AB HEATER 18	594.1	0.557	0.74	0.030
TC R0118BC HEATER 1	602.7	0.807	9.34	0.378
TC R0118CD HEATER 1	602.6	1.111	9.21	0.373
TC R0118DE HEATER 1	598.9	0.786	5.55	0.225
TC R0219BC HEATER 2	593.4	0.722	0.04	0.002
TC R0418BC HEATER 4	601.1	0.588	7.67	0.310
TC R0418CD HEATER 4	601.9	0.759	8.48	0.343
TC R0418DE HEATER 4	607.7	0.946	14.29	0.578
TC R0518BC HEATER 5	610.4	0.775	17.00	0.688
TC R0518CD HEATER 5	609.0	0.900	15.64	0.633
TC R0718BC HEATER 7	594.8	1.180	1.42	0.057
TC R0718CD HEATER 7	594.0	0.946	0.62	0.025
TC R0718DE HEATER 7	594.0	1.032	0.64	0.026
TC R0818BC HEATER 8	593.6	0.938	0.21	0.008
TC R1019BC HEATER 10	594.8	0.574	1.38	0.056
TC R1718BC HEATER 17	612.4	0.946	19.00	0.769
TC R1918DE HEATER 19	593.7	0.725	0.33	0.013

OPERATING DATA FOR FFM SERIES 2 TEST 9 RUN 601
WHICH WAS DONE ON 30772 1037

DESCRIPTION	MEAN VALUE	STANDARD DEVIATION
HEATER 1 POWER KW	-0.03	0.0
HEATER 8,18,19 POWER	17.31	0.024
HTR 12,13,14 POWER	-0.09	0.018
HTR 2,7,9,17 POWER	17.31	0.024
HTR 4,5,11,15 POWER	-0.09	0.018
HTR 3,6,10,16 POWER	17.67	0.013
TOTAL POWER	51.65	0.120
TEST SECT FLOW, GPM	54.32	0.054
TEST SECT INLET PR	33.94	0.068
TEST SECT OUTLET PR	8.71	0.072
TOTAL FLOW, GPM	113.32	1.303
PUMP OUTLET PR, PSI	35.66	0.059
PUMP SPEED, RPM	1500.00	1.000
BLOWER SPEED, RPM	149.93	0.570
AIR FLOW (200 F) CFM	1.04	0.010
TC 313 TEST SECT IN	607.86	0.388
TC 317 TEST SECT OUT	633.00	0.420
TC 300 PUMP OUTLET	608.27	0.435
TC 318 RADIATOR IN	633.62	0.454
TC 334 RADIATOR OUT	606.82	1.341
TC 336 PUMP INLET	608.08	0.512
TC 332 RAD AIR IN	99.38	1.139
TC 331 RAD AIR OUT	351.20	2.386

HEAT BALANCE ON SODIUM FLOWING THROUGH BUNDLE
HEAT SUPPLIED BY DUMMY FUEL RODS = 178570.31 BTU/HR
HEAT ADDED TO SODIUM = 184006.69 BTU/HR
PERCENT HEAT BALANCE = 103.04

RESULTS FOR UNGROUNDED JUNCTION THERMOCOUPLES
FFM SERIES 2 TEST 9 RUN 601 DONE ON 30772 1037

DESCRIPTION	TEMP DEG F	STD DEV	RISE AB INLET T	NORMALIZED TEMP
TC 1504U CH 37	609.2	0.538	1.38	0.057
TC 1706U CH 21	658.2	0.520	50.32	2.063
TC 1807U CH 24	683.4	0.509	75.56	3.097
TC 1108U CH 31	607.8	0.499	-0.08	-0.003
TC 0409U CH 13	607.5	0.447	-0.32	-0.013
TC 0509U CH 3	608.0	0.454	0.11	0.005
TC 1009U CH 29	607.8	0.458	-0.03	-0.001
TC 1409U CH 17	608.1	0.590	0.24	0.010
TC 1609U CH 21	683.9	0.400	76.08	3.118
TC 1914U CH 24	610.8	0.528	2.93	0.120
TC 0815U CH 8	610.8	0.519	2.93	0.120
TC 1316U CH 35	625.0	0.504	17.15	0.703
TC 1516U CH 37	651.1	0.485	43.29	1.774
TC 0817U CH 9	608.7	0.446	0.87	0.036
TC 1217U CH 33	621.6	0.472	13.74	0.563
TC 1318U CH 34	623.4	0.451	15.52	0.636
TC 1718U CH 22	707.3	0.552	99.42	4.075
TC 1219U CH 32	623.3	0.681	15.41	0.632
TC 1819U CH 24	668.0	0.627	60.19	2.467
TC 1120U CH 31	614.7	0.620	6.83	0.280
TC 0421U CH 13	607.6	0.644	-0.27	-0.011
TC 0521U CH 3	610.0	0.647	2.18	0.089
TC 1021U CH 29	610.4	0.552	2.59	0.106
TC 1421U CH 17	620.9	0.657	13.08	0.536
TC 1621U CH 21	722.8	0.809	114.90	4.710

RESULTS FOR GROUNDED JUNCTION THERMOCOUPLES
FFM SERIES 2 TEST 9 RUN 601 DONE ON 30772 1037

DESCRIPTION	TEMP DEG F	STD DEV	RISE AB INLET T	NORMALIZED TEMP
TC 0118C CH 3	608.3	0.678	0.47	0.019
TC 0618D CH 4	617.5	0.593	9.60	0.393
TC 0618C CH 19	638.1	0.692	30.23	1.239
TC 0219A HEATER 2	608.7	0.724	0.81	0.033
TC 0219B CH 10	608.0	0.785	0.15	0.006
TC 0919A HTR 9 EXT	607.6	0.676	-0.28	-0.011
TC 0919B CH 29	607.9	0.755	0.09	0.004
TC 0718C CH 5	620.6	0.535	12.79	0.524
TC 0718D CH 6	624.4	0.769	16.58	0.680
TC 0319A HEATER 3	607.4	0.632	-0.41	-0.017
TC 0319B CH 12	607.4	0.779	-0.42	-0.017

RESULTS FOR DUCT WALL THERMOCOUPLES
FFM SERIES 2 TEST 9 RUN 601 DONE ON 30772 1037

DESCRIPTION	TEMP DEG F	STD DEV	RISE AB INLET T	NORMALIZED TEMP
TC D0B04 DUCT B	608.6	0.446	0.70	0.029
TC D0E04 DUCT E	607.8	0.615	-0.11	-0.005
TC D0F04 DUCT F	611.6	0.547	3.77	0.155
TC D0B08 DUCT B	608.2	0.520	0.33	0.014
TC D0D08 DUCT D	607.7	0.402	-0.13	-0.005
TC D0F08 DUCT F	622.7	0.483	14.87	0.609
TC D0B12 DUCT B	609.5	0.437	1.63	0.067
TC D0E12 DUCT E	611.4	0.510	3.56	0.146
TC D0F12 DUCT F	632.2	0.349	24.38	0.999
TC D0B16 DUCT B	615.6	0.470	7.78	0.319
TC D0D16 DUCT D	609.8	0.532	1.90	0.078
TC D0F16 DUCT F	641.7	0.507	33.87	1.388
TC D0D18 DUCT D	615.1	0.432	7.29	0.299
TC D0E18 DUCT E	623.8	0.515	15.99	0.655
TC DAB18 DUCT AB	641.5	0.428	33.67	1.380
TC DDE18 DUCT DE	615.8	0.484	7.93	0.325
TC DEF18 DUCT EF	621.6	0.455	13.72	0.562
TC D0F18 DUCT F	648.2	0.449	40.31	1.652
TC DFA18 DUCT FA	665.4	0.625	57.50	2.357
TC D0B21 DUCT B	610.4	0.621	2.59	0.106
TC D0D21 DUCT D	613.8	0.602	5.99	0.246
TC D0F21 DUCT F	669.8	0.684	61.98	2.540
TC D0B23 DUCT B	612.5	0.724	4.63	0.190
TC D0D23 DUCT D	614.3	0.656	6.46	0.265
TC D0F23 DUCT F	690.7	0.743	82.80	3.394

RESULTS FOR THERMOCOUPLES IN CHANNEL EXITS
FFM SERIES 2 TEST 9 RUN 601 DONE ON 30772 1037

DESCRIPTION	TEMP DEG F	STD DEV	RISE AB INLET T	NORMALIZED TEMP
TC EC03 EXIT CH 3	615.4	0.554	7.55	0.309
TC EC16 EXIT CH 16	616.2	0.642	8.30	0.340
TC EC17 EXIT CH 17	622.8	0.747	14.95	0.613
TC EC34 EXIT CH 34	644.8	0.939	36.93	1.514
TC EC35 EXIT CH 35	666.6	0.744	58.79	2.410
TC EC36 EXIT CH 36	669.8	0.912	61.92	2.538
TC EC06 EXIT CH 6	618.7	0.721	10.85	0.445
TC EC08 EXIT CH 8	611.4	0.718	3.50	0.143
TC EC27 EXIT CH 27	619.8	0.652	11.96	0.490
TC EA36 EXIT ANN EF	654.6	1.033	46.75	1.916
TC EA27 EXIT ANN BC	618.0	0.610	10.17	0.417
TC EA28 EXIT ANN C	629.4	1.201	21.59	0.885

RESULTS FOR THERMOCOUPLES INSIDE HEATERS
FFM SERIES 2 TEST 9 RUN 601 DONE ON 30772 1037

DESCRIPTION	TEMP DEG F	STD DEV	RISE AB INLET T	NORMALIZED TEMP
TC R0118AB HTR 1 INT	610.3	0.444	2.49	0.102
TC R0219AB HTR 2 INT	610.9	0.614	3.04	0.125
TC R0418AB HTR 4 INT	607.8	0.692	-0.03	-0.001
TC R0518AB HTR 5 INT	608.7	0.658	0.87	0.036
TC R1019AB HEATER 10	607.4	0.593	-0.50	-0.020
TC R1218AB HEATER 12	618.7	1.211	10.87	0.446
TC R1318DE HEATER 13	620.1	0.599	12.24	0.502
TC R1418AB HEATER 14	634.3	0.606	26.41	1.082
TC R1518AB HEATER 15	651.1	0.618	43.22	1.772
TC R1618AB HEATER 16	927.8	0.724	319.93	13.113
TC R1718AB HEATER 17	820.8	0.815	212.96	8.729
TC R1817AB HEATER 18	792.5	0.585	184.67	7.569
TC R0118BC HEATER 1	610.1	0.649	2.23	0.091
TC R0118CD HEATER 1	609.1	0.638	1.29	0.053
TC R0118DE HEATER 1	608.9	0.527	1.08	0.044
TC R0219BC HEATER 2	611.3	0.649	3.48	0.143
TC R0418BC HEATER 4	607.6	0.522	-0.23	-0.009
TC R0418CD HEATER 4	608.0	0.493	0.11	0.005
TC R0418DE HEATER 4	608.2	0.574	0.31	0.013
TC R0518BC HEATER 5	609.1	0.580	1.29	0.053
TC R0518CD HEATER 5	609.5	0.715	1.67	0.068
TC R0718BC HEATER 7	618.4	0.871	10.53	0.432
TC R0718CD HEATER 7	616.6	0.582	8.76	0.359
TC R0718DE HEATER 7	613.6	0.648	5.76	0.236
TC R0818BC HEATER 8	608.0	0.607	0.15	0.006
TC R1019BC HEATER 10	607.9	0.585	0.04	0.002
TC R1718BC HEATER 17	822.5	0.615	214.68	8.799
TC R1918DE HEATER 19	611.2	0.598	3.37	0.138

OPERATING DATA FOR FFM SERIES 2 TEST 10 RUN 104
WHICH WAS DONE ON 30372 1215

DESCRIPTION	MEAN VALUE	STANDARD DEVIATION
HEATER 1 POWER KW	17.50	0.007
HEATER 8,18,19 POWER	0.0	0.0
HTR 12,13,14 POWER	-0.04	0.0
HTR 2,7,9,17 POWER	-0.02	0.012
HTR 4,5,11,15 POWER	-0.04	0.007
HTR 3,6,10,16 POWER	-0.08	0.0
TOTAL POWER	16.42	0.063
TEST SECT FLOW, GPM	54.93	0.097
TEST SECT INLET PR	34.56	0.086
TEST SECT OUTLET PR	8.76	0.044
TOTAL FLOW, GPM	114.53	2.198
PUMP OUTLET PR, PSI	35.69	0.065
PUMP SPEED. RPM	1520.78	0.833
BLOWER SPEED, RPM	-2.57	0.075
AIR FLOW (200 F) CFM	1.01	0.007
TC 313 TEST SECT IN	610.80	0.308
TC 317 TEST SECT OUT	618.78	0.253
TC 300 PUMP OUTLET	610.71	0.346
TC 318 RADIATOR IN	618.60	0.731
TC 334 RADIATOR OUT	611.38	0.159
TC 336 PUMP INLET	611.03	0.218
TC 332 RAD AIR IN	111.27	0.443
TC 331 RAD AIR OUT	276.86	1.434

HEAT BALANCE ON SODIUM FLOWING THROUGH BUNDLE
HEAT SUPPLIED BY DUMMY FUEL RODS = 59762.50 BTU/HR
HEAT ADDED TO SODIUM = 59014.85 BTU/HR
PERCENT HEAT BALANCE = 98.75

RESULTS FOR UNGROUNDED JUNCTION THERMOCOUPLES
FFM SERIES 2 TEST 10 RUN 104 DONE ON 30372 1215

DESCRIPTION	TEMP DEG F	STD DEV	RISE AB INLET T	NORMALIZED TEMP
TC 1504U CH 37	611.0	0.300	0.22	0.027
TC 1706U CH 21	611.3	0.100	0.55	0.068
TC 1807U CH 24	610.6	0.256	-0.17	-0.021
TC 1108U CH 31	610.6	0.294	-0.24	-0.030
TC 0409U CH 13	612.1	0.314	1.33	0.165
TC 0509U CH 3	623.4	0.244	12.61	1.560
TC 1009U CH 29	611.3	0.295	0.47	0.058
TC 1409U CH 17	611.0	0.294	0.16	0.020
TC 1609U CH 21	611.3	0.418	0.55	0.068
TC 1914U CH 24	610.6	0.241	-0.15	-0.019
TC 0815U CH 8	612.7	0.206	1.93	0.239
TC 1316U CH 35	610.9	0.203	0.15	0.019
TC 1516U CH 37	611.0	0.239	0.17	0.021
TC 0817U CH 9	616.5	0.306	5.68	0.703
TC 1217U CH 33	611.0	0.198	0.16	0.020
TC 1318U CH 34	611.4	0.310	0.56	0.069
TC 1718U CH 22	618.3	0.228	7.51	0.929
TC 1219U CH 32	611.0	0.599	0.23	0.028
TC 1819U CH 24	611.3	0.508	0.49	0.061
TC 1120U CH 31	610.9	0.729	0.15	0.019
TC 0421U CH 13	621.3	0.581	10.54	1.304
TC 0521U CH 3	632.8	0.621	22.02	2.725
TC 1021U CH 29	611.4	0.570	0.56	0.069
TC 1421U CH 17	612.7	0.526	1.89	0.234
TC 1621U CH 21	618.2	0.474	7.42	0.918

RESULTS FOR GROUNDED JUNCTION THERMOCOUPLES
FFM SERIES 2 TEST 10 RUN 104 DONE ON 30372 1215

DESCRIPTION	TEMP DEG F	STD DEV	RISE AB INLET T	NORMALIZED TEMP
TC 0118C CH 3	691.0	0.478	80.23	9.928
TC 0118D CH 2	593.5	0.279	-17.29	-2.140
TC 0618D CH 4	641.1	0.594	30.26	3.745
TC 0618C CH 19	625.2	0.587	14.36	1.777
TC 0219A HEATER 2	624.2	0.652	13.40	1.658
TC 0219B CH 10	619.1	0.754	8.32	1.030
TC 0919A HTR 9 EXT	613.2	0.636	2.36	0.292
TC 0919B CH 29	612.0	0.603	1.22	0.151
TC 0718C CH 5	649.9	0.570	39.10	4.838
TC 0718D CH 6	648.1	0.537	37.28	4.613
TC 0319A HEATER 3	621.5	0.461	10.71	1.325
TC 0319B CH 12	617.9	0.721	7.07	0.875

RESULTS FOR DUCT WALL THERMOCOUPLES
FFM SERIES 2 TEST 10 RUN 104 DONE ON 30372 1215

DESCRIPTION	TEMP DEG F	STD DEV	RISE AB INLET T	NORMALIZED TEMP
TC DOB04 DUCT B	610.6	0.404	-0.18	-0.022
TC DOE04 DUCT E	610.7	0.245	-0.06	-0.007
TC DOF04 DUCT F	610.9	0.295	0.15	0.019
TC DOB08 DUCT B	610.1	0.161	-0.70	-0.087
TC DOD08 DUCT D	610.8	0.368	-0.01	-0.001
TC DOF08 DUCT F	610.8	0.295	-0.03	-0.004
TC DOB12 DUCT B	610.3	0.253	-0.50	-0.062
TC DOE12 DUCT E	611.2	0.320	0.42	0.052
TC DOF12 DUCT F	610.9	0.225	0.11	0.014
TC DOB16 DUCT B	610.5	0.098	-0.25	-0.031
TC DOD16 DUCT D	611.0	0.225	0.20	0.025
TC DOF16 DUCT F	610.5	0.382	-0.25	-0.031
TC DOD18 DUCT D	610.9	0.306	0.11	0.014
TC DOE18 DUCT E	611.0	0.394	0.18	0.022
TC DAB18 DUCT AB	610.9	0.366	0.14	0.017
TC DDE18 DUCT DE	611.1	0.410	0.32	0.040
TC DEF18 DUCT EF	610.6	0.321	-0.18	-0.022
TC DOF18 DUCT F	610.9	0.271	0.13	0.016
TC DFA18 DUCT FA	611.1	0.236	0.35	0.043
TC DOB21 DUCT B	610.5	0.566	-0.30	-0.037
TC DOD21 DUCT D	610.6	0.459	-0.16	-0.020
TC DOF21 DUCT F	610.8	0.590	0.03	0.004
TC DOB23 DUCT B	610.9	0.557	0.10	0.012
TC DOD23 DUCT D	611.3	0.720	0.45	0.056
TC DOF23 DUCT F	610.9	0.418	0.06	0.007

RESULTS FOR THERMOCOUPLES IN CHANNEL EXITS
FFM SERIES 2 TEST 10 RUN 104 DONE ON 30372 1215

DESCRIPTION	TEMP DEG F	STD DEV	RISE AB INLET T	NORMALIZED TEMP
TC EC03 EXIT CH 3	623.0	0.601	12.18	1.507
TC EC16 EXIT CH 16	613.8	0.552	3.02	0.374
TC EC17 EXIT CH 17	613.2	0.548	2.39	0.296
TC EC34 EXIT CH 34	611.3	0.577	0.53	0.066
TC EC35 EXIT CH 35	611.8	0.396	1.04	0.129
TC EC36 EXIT CH 36	611.9	0.612	1.14	0.141
TC EC06 EXIT CH 6	635.7	0.588	24.92	3.084
TC EC08 EXIT CH 8	615.0	0.441	4.18	0.517
TC EC27 EXIT CH 27	611.8	0.430	0.99	0.123
TC EA36 EXIT ANN EF	611.9	0.396	1.07	0.132
TC EA27 EXIT ANN BC	612.4	0.227	1.62	0.200
TC EA28 EXIT ANN C	612.0	0.332	1.17	0.145

RESULTS FOR THERMOCOUPLES INSIDE HEATERS
FFM SERIES 2 TEST 10 RUN 104 DONE ON 30372 1215

DESCRIPTION	TEMP DEG F	STD DEV	RISE AB INLET T	NORMALIZED TEMP
TC R0118AB HTR 1 INT	799.9	0.170	189.09	23.399
TC R0219AB HTR 2 INT	623.0	0.985	12.22	1.512
TC R0418AB HTR 4 INT	646.4	0.702	35.64	4.410
TC R0518AB HTR 5 INT	642.1	0.849	31.32	3.876
TC R1019AB HEATER 10	611.7	0.602	0.93	0.115
TC R1218AB HEATER 12	610.6	0.569	-0.19	-0.024
TC R1318DE HEATER 13	611.5	0.561	0.66	0.082
TC R1418AB HEATER 14	610.7	0.651	-0.10	-0.012
TC R1518AB HEATER 15	616.6	0.662	5.78	0.715
TC R1618AB HEATER 16	610.9	0.418	0.15	0.019
TC R1718AB HEATER 17	617.1	0.759	6.31	0.781
TC R1817AB HEATER 18	610.8	0.573	0.03	0.004
TC R0118BC HEATER 1	817.5	0.444	206.68	25.576
TC R0118CD HEATER 1	843.8	0.406	232.96	28.828
TC R0118DE HEATER 1	817.5	0.424	206.70	25.578
TC R0219BC HEATER 2	631.4	0.978	20.59	2.548
TC R0418BC HEATER 4	648.5	0.472	37.67	4.662
TC R0418CD HEATER 4	647.0	0.523	36.22	4.482
TC R0418DE HEATER 4	631.2	0.266	20.42	2.527
TC R0518BC HEATER 5	642.1	0.415	31.33	3.877
TC R0518CD HEATER 5	660.3	0.695	49.53	6.129
TC R0718BC HEATER 7	636.0	0.676	25.19	3.117
TC R0718CD HEATER 7	635.6	0.416	24.85	3.075
TC R0718DE HEATER 7	622.4	0.542	11.65	1.442
TC R0818BC HEATER 8	612.3	0.390	1.47	0.182
TC R1019BC HEATER 10	612.7	0.508	1.89	0.234
TC R1718BC HEATER 17	617.3	0.721	6.52	0.807
TC R1918DE HEATER 19	617.8	0.427	7.05	0.872

OPERATING DATA FOR FFM SERIES 2 TEST 10 RUN 104
WHICH WAS DONE ON 30872 1233

DESCRIPTION	MEAN VALUE	STANDARD DEVIATION
HEATER 1 POWER KW	18.24	0.019
HEATER 8,18,19 POWER	-0.01	0.018
HTR 12,13,14 POWER	-0.10	0.022
HTR 2,7,9,17 POWER	-0.05	0.018
HTR 4,5,11,15 POWER	-0.08	0.0
HTR 3,6,10,16 POWER	-0.14	0.022
TOTAL POWER	17.00	0.0
TEST SECT FLOW, GPM	54.13	0.048
TEST SECT INLET PR	34.12	0.080
TEST SECT OUTLET PR	8.71	0.050
TOTAL FLOW, GPM	112.44	1.616
PUMP OUTLET PR, PSI	35.63	0.068
PUMP SPEED, RPM	1499.60	0.894
BLOWER SPEED, RPM	77.40	0.625
AIR FLOW (200 F) CFM	1.00	0.005
TC 313 TEST SECT IN	605.03	0.485
TC 317 TEST SECT OUT	613.83	0.413
TC 300 PUMP OUTLET	604.55	0.207
TC 318 RADIATOR IN	613.33	0.522
TC 334 RADIATOR OUT	603.87	0.775
TC 336 PUMP INLET	604.34	0.502
TC 332 RAD AIR IN	299.93	1.139
TC 331 RAD AIR OUT	399.20	16.527

HEAT BALANCE ON SODIUM FLOWING THROUGH BUNDLE
HEAT SUPPLIED BY DUMMY FUEL RODS = 62289.57 BTU/HR
HEAT ADDED TO SODIUM = 64236.06 BTU/HR
PERCENT HEAT BALANCE = 103.12

RESULTS FOR UNGROUNDED JUNCTION THERMOCOUPLES
FFM SERIES 2 TEST 10 RUN 104 DONE ON 30872 1233

DESCRIPTION	TEMP DEG F	STD DEV	RISE AB INLET T	NORMALIZED TEMP
TC 1504U CH 37	604.8	0.579	-0.24	-0.028
TC 1706U CH 21	605.2	0.312	0.21	0.025
TC 1807U CH 24	604.7	0.318	-0.36	-0.042
TC 1108U CH 31	605.0	0.413	-0.06	-0.007
TC 0409U CH 13	606.1	0.424	1.08	0.127
TC 0509U CH 3	617.2	0.312	12.15	1.424
TC 1009U CH 29	605.0	0.645	-0.02	-0.002
TC 1409U CH 17	604.8	0.388	-0.25	-0.029
TC 1609U CH 21	604.8	0.186	-0.24	-0.028
TC 1914U CH 24	605.0	0.550	-0.06	-0.007
TC 0815U CH 8	607.2	0.550	2.14	0.251
TC 1316U CH 35	605.4	0.592	0.38	0.045
TC 1516U CH 37	604.7	0.424	-0.32	-0.037
TC 0817U CH 9	609.8	0.475	4.77	0.559
TC 1217U CH 33	604.7	0.413	-0.30	-0.035
TC 1318U CH 34	605.3	0.380	0.24	0.028
TC 1718U CH 22	611.5	0.294	6.43	0.754
TC 1219U CH 32	604.9	0.537	-0.10	-0.012
TC 1819U CH 24	606.0	0.659	0.95	0.111
TC 1120U CH 31	606.7	1.189	1.64	0.192
TC 0421U CH 13	617.1	0.664	12.03	1.410
TC 0521U CH 3	631.4	0.596	26.41	3.095
TC 1021U CH 29	605.3	0.634	0.24	0.028
TC 1421U CH 17	606.7	0.499	1.65	0.193
TC 1621U CH 21	611.4	0.498	6.39	0.749

RESULTS FOR GROUNDED JUNCTION THERMOCOUPLES
FFM SERIES 2 TEST 10 RUN 104 DONE ON 30872 1233

DESCRIPTION	TEMP DEG F	STD DEV	RISE AB INLET T	NORMALIZED TEMP
TC 0118C CH 3	690.3	0.623	85.26	9.991
TC 0618D CH 4	639.9	0.797	34.84	4.083
TC 0618C CH 19	620.7	0.465	15.68	1.838
TC 0219A HEATER 2	617.8	0.537	12.78	1.498
TC 0219B CH 10	613.0	0.605	7.99	0.936
TC 0919A HTR 9 EXT	607.2	0.804	2.16	0.253
TC 0919B CH 29	606.1	0.719	1.06	0.124
TC 0718C CH 5	645.1	0.737	40.04	4.692
TC 0718D CH 6	646.1	0.724	41.06	4.812
TC 0319A HEATER 3	616.0	0.578	10.96	1.284
TC 0319B CH 12	612.8	0.537	7.80	0.914

RESULTS FOR DUCT WALL THERMOCOUPLES
FFM SERIES 2 TEST 10 RUN 104 DONE ON 30872 1233

DESCRIPTION	TEMP DEG F	STD DEV	RISE AB INLET T	NORMALIZED TEMP
TC DOB04 DUCT B	605.1	0.380	0.08	0.009
TC DOE04 DUCT E	604.6	0.294	-0.41	-0.048
TC DOF04 DUCT F	605.2	0.533	0.16	0.019
TC DOB08 DUCT B	605.2	0.504	0.17	0.020
TC D D08 DUCT D	604.8	0.386	-0.18	-0.021
TC DOF08 DUCT F	605.1	0.359	0.07	0.008
TC DOB12 DUCT B	605.2	0.442	0.20	0.023
TC DOE12 DUCT E	605.0	0.297	-0.06	-0.007
TC DOF12 DUCT F	605.3	0.193	0.22	0.026
TC DOB16 DUCT B	604.8	0.359	-0.25	-0.029
TC DOD16 DUCT D	605.2	0.613	0.20	0.023
TC DOF16 DUCT F	605.2	0.386	0.16	0.019
TC DOD18 DUCT D	605.3	0.388	0.23	0.027
TC DOE18 DUCT E	605.3	0.502	0.27	0.032
TC DAB18 DUCT AB	604.9	0.358	-0.10	-0.012
TC DDE18 DUCT DE	605.4	0.386	0.34	0.040
TC DEF18 DUCT EF	604.6	0.248	-0.39	-0.046
TC DOF18 DUCT F	604.8	0.358	-0.18	-0.021
TC DFA18 DUCT FA	605.0	0.285	-0.05	-0.006
TC DOB21 DUCT B	604.5	0.597	-0.49	-0.057
TC DOD21 DUCT D	605.3	0.570	0.24	0.028
TC DOF21 DUCT F	605.2	0.504	0.21	0.025
TC DOB23 DUCT B	605.2	0.504	0.21	0.025
TC DOD23 DUCT D	605.5	0.770	0.46	0.054
TC DOF23 DUCT F	605.7	0.623	0.66	0.077

RESULTS FOR THERMOCOUPLES IN CHANNEL EXITS
FFM SERIES 2 TEST 10 RUN 104 DONE ON 30872 1233

DESCRIPTION	TEMP DEG F	STD DEV	RISE AB INLET T	NORMALIZED TEMP
TC EC03 EXIT CH 3	618.3	0.550	13.22	1.549
TC EC16 EXIT CH 16	608.3	0.537	3.24	0.380
TC EC17 EXIT CH 17	607.6	0.499	2.59	0.304
TC EC34 EXIT CH 34	605.6	0.424	0.59	0.069
TC EC35 EXIT CH 35	605.8	0.537	0.80	0.094
TC EC36 EXIT CH 36	606.5	0.590	1.46	0.171
TC EC06 EXIT CH 6	628.4	0.626	23.41	2.743
TC EC08 EXIT CH 8	609.7	0.724	4.70	0.551
TC EC27 EXIT CH 27	606.4	0.523	1.35	0.158
TC EA36 EXIT ANN EF	606.8	0.508	1.78	0.209
TC EA27 EXIT ANN BC	606.8	0.592	1.81	0.212
TC EA28 EXIT ANN C	606.6	0.730	1.55	0.182

RESULTS FOR THERMOCOUPLES INSIDE HEATERS
FFM SERIES 2 TEST 10 RUN 104 DONE ON 30872 1233

DESCRIPTION	TEMP DEG F	STD DEV	RISE AB INLET T	NORMALIZED TEMP
TC R0118AB HTR 1 INT	802.1	0.332	197.11	23.099
TC R0219AB HTR 2 INT	618.3	0.501	13.32	1.561
TC R0418AB HTR 4 INT	642.8	0.352	37.76	4.425
TC R0518AB HTR 5 INT	638.5	0.684	33.44	3.919
TC R1019AB HEATER 10	606.8	0.679	1.75	0.205
TC R1218AB HEATER 12	603.3	1.317	-1.70	-0.199
TC R1318DE HEATER 13	605.6	0.537	0.62	0.073
TC R1418AB HEATER 14	605.3	0.463	0.22	0.026
TC R1518AB HEATER 15	610.4	0.386	5.34	0.626
TC R1618AB HEATER 16	605.5	0.537	0.50	0.059
TC R1718AB HEATER 17	611.1	0.456	6.04	0.708
TC R1817AB HEATER 18	605.1	0.634	0.04	0.005
TC R0118BC HEATER 1	821.9	0.775	216.89	25.417
TC R0118CD HEATER 1	848.6	0.931	243.58	28.544
TC R0118DE HEATER 1	821.0	0.904	215.93	25.304
TC R0219BC HEATER 2	629.4	0.574	24.35	2.854
TC R0418BC HEATER 4	645.4	0.408	40.36	4.730
TC R0418CD HEATER 4	644.6	0.756	39.55	4.635
TC R0418DE HEATER 4	629.1	0.724	24.10	2.824
TC R0518BC HEATER 5	639.8	0.711	34.78	4.076
TC R0518CD HEATER 5	656.0	0.625	50.95	5.971
TC R0718BC HEATER 7	632.0	0.997	26.96	3.159
TC R0718CD HEATER 7	630.7	0.708	25.67	3.008
TC R0718DE HEATER 7	616.7	0.674	11.69	1.370
TC R0818BC HEATER 8	606.7	0.675	1.66	0.195
TC R1019BC HEATER 10	606.4	0.567	1.41	0.165
TC R1718BC HEATER 17	611.6	0.708	6.61	0.775
TC R1918DE HEATER 19	611.5	0.329	6.51	0.763

OPERATING DATA FOR FFM SERIES 2 TEST 10 RUN 204
WHICH WAS DONE ON 30872 1316

DESCRIPTION	MEAN VALUE	STANDARD DEVIATION
HEATER 1 POWER KW	-0.03	0.004
HEATER 8,18,19 POWER	0.0	0.0
HTR 12,13,14 POWER	-0.10	0.022
HTR 2,7,9,17 POWER	17.31	0.0
HTR 4,5,11,15 POWER	-0.09	0.018
HTR 3,6,10,16 POWER	-0.14	0.022
TOTAL POWER	16.52	0.0
TEST SECT FLOW, GPM	54.17	0.065
TEST SECT INLET PR	34.18	0.084
TEST SECT OUTLET PR	8.76	0.040
TOTAL FLOW, GPM	113.48	1.406
PUMP OUTLET PR, PSI	35.64	0.032
PUMP SPEED, RPM	1501.40	0.894
BLOWER SPEED, RPM	87.07	0.443
AIR FLOW (200 F) CFM	0.99	0.0
TC 313 TEST SECT IN	610.25	1.402
TC 317 TEST SECT OUT	618.69	1.172
TC 300 PUMP OUTLET	609.79	1.246
TC 318 RADIATOR IN	618.64	1.155
TC 334 RADIATOR OUT	606.90	1.001
TC 336 PUMP INLET	609.15	1.272
TC 332 RAD AIR IN	292.59	4.006
TC 331 RAD AIR OUT	379.26	17.134

HEAT BALANCE ON SODIUM FLOWING THROUGH BUNDLE
HEAT SUPPLIED BY DUMMY FUEL RODS = 59113.64 BTU/HR
HEAT ADDED TO SODIUM = 61562.64 BTU/HR
PERCENT HEAT BALANCE = 104.14

RESULTS FOR UNGROUNDED JUNCTION THERMOCOUPLES
FFM SERIES 2 TEST 10 RUN 204 DONE ON 30872 1316

DESCRIPTION	TEMP DEG F	STD DEV	RISE AB INLET T	NORMALIZED TEMP
TC 1504U CH 37	610.0	1.155	-0.29	-0.036
TC 1706U CH 21	610.1	1.272	-0.16	-0.020
TC 1807U CH 24	610.3	1.402	0.06	0.007
TC 1108U CH 31	610.2	1.402	-0.02	-0.002
TC 0409U CH 13	610.4	1.222	0.14	0.017
TC 0509U CH 3	610.3	1.443	0.08	0.010
TC 1009U CH 29	610.3	1.348	0.0	0.0
TC 1409U CH 17	610.0	1.155	-0.23	-0.028
TC 1609U CH 21	609.9	1.351	-0.31	-0.038
TC 1914U CH 24	611.9	1.120	1.69	0.209
TC 0815U CH 8	634.0	1.410	23.79	2.935
TC 1316U CH 35	609.8	1.125	-0.45	-0.056
TC 1516U CH 37	609.9	1.374	-0.32	-0.039
TC 0817U CH 9	637.0	1.169	26.73	3.298
TC 1217U CH 33	610.0	1.402	-0.26	-0.032
TC 1318U CH 34	609.8	1.318	-0.46	-0.057
TC 1718U CH 22	611.0	1.402	0.78	0.096
TC 1219U CH 32	609.6	1.227	-0.66	-0.081
TC 1819U CH 24	618.3	1.346	8.10	0.999
TC 1120U CH 31	609.7	1.061	-0.56	-0.069
TC 0421U CH 13	613.4	1.384	3.20	0.395
TC 0521U CH 3	611.5	1.481	1.24	0.153
TC 1021U CH 29	610.3	1.300	0.07	0.009
TC 1421U CH 17	609.6	1.232	-0.64	-0.079
TC 1621U CH 21	610.3	1.286	0.04	0.005

RESULTS FOR GROUNDED JUNCTION THERMOCOUPLES
FFM SERIES 2 TEST 10 RUN 204 DONE ON 30872 1316

DESCRIPTION	TEMP DEG F	STD DEV	RISE AB INLET T	NORMALIZED TEMP
TC 0118C CH 3	616.5	1.208	6.24	0.770
TC 0618D CH 4	614.2	1.157	3.91	0.482
TC 0618C CH 19	611.5	1.387	1.22	0.151
TC 0219A HEATER 2	690.7	1.329	80.43	9.924
TC 0219B CH 10	656.4	1.360	46.15	5.695
TC 0919A HTR 9 EXT	619.1	1.332	8.88	1.096
TC 0919B CH 29	613.7	1.187	3.48	0.429
TC 0718C CH 5	635.1	1.461	24.82	3.063
TC 0718D CH 6	629.9	1.374	19.66	2.426
TC 0319A HEATER 3	612.8	1.422	2.50	0.308
TC 0319B CH 12	611.4	1.189	1.14	0.141

RESULTS FOR DUCT WALL THERMCCOUPLES
FFM SERIES 2 TEST 10 RUN 204 DONE ON 30872 1316

DESCRIPTION	TEMP DEG F	STD DEV	RISE AB INLET T	NORMALIZED TEMP
TC D0B04 DUCT B	610.4	1.314	0.12	0.015
TC D0E04 DUCT E	610.7	1.402	0.44	0.054
TC D0F04 DUCT F	610.8	1.402	0.54	0.067
TC D0B08 DUCT B	610.5	1.297	0.21	0.026
TC D0D08 DUCT D	610.4	1.258	0.18	0.022
TC D0F08 DUCT F	610.8	1.182	0.52	0.064
TC D0B12 DUCT B	611.8	1.182	1.50	0.185
TC D0E12 DUCT E	610.6	1.252	0.34	0.042
TC D0F12 DUCT F	610.9	1.100	0.63	0.078
TC D0B16 DUCT B	616.0	1.416	5.80	0.716
TC D0D16 DUCT D	610.5	1.203	0.26	0.032
TC D0F16 DUCT F	611.2	1.410	0.99	0.122
TC D0D18 DUCT D	610.9	1.231	0.68	0.084
TC D0E18 DUCT E	610.8	1.258	0.60	0.074
TC DAB18 DUCT AB	612.3	1.374	2.08	0.257
TC DDE18 DUCT DE	610.9	1.258	0.70	0.086
TC DEF18 DUCT EF	611.1	1.100	0.85	0.105
TC D0F18 DUCT F	610.9	1.088	0.64	0.079
TC DFA18 DUCT FA	611.0	1.088	0.72	0.089
TC D0B21 DUCT B	611.7	1.312	1.45	0.179
TC D0D21 DUCT D	610.3	1.167	0.06	0.007
TC D0F21 DUCT F	610.3	1.241	0.0	0.0
TC D0B23 DUCT B	613.2	1.286	2.96	0.365
TC D0D23 DUCT D	610.5	1.528	0.23	0.028
TC D0F23 DUCT F	611.1	1.454	0.83	0.102

RESULTS FOR THERMOCOUPLES IN CHANNEL EXITS
FFM ERIES 2 TEST 10 RUN 204 DONE ON 30872 1316

DESCRIPTION	TEMP DEG F	STD DEV	RISE AB INLET T	NORMALIZED TEMP
TC EC03 EXIT CH 3	611.6	1.275	1.32	0.163
TC EC16 EXIT CH 16	610.3	1.213	0.07	0.009
TC EC17 EXIT CH 17	610.9	1.429	0.68	0.084
TC EC34 EXIT CH 34	611.1	1.365	0.81	0.100
TC EC35 EXIT CH 35	610.5	1.365	0.21	0.026
TC EC36 EXIT CH 36	612.4	1.312	2.15	0.265
TC EC06 EXIT CH 6	645.6	1.163	35.40	4.368
TC EC08 EXIT CH 8	641.6	1.462	31.34	3.867
TC EC27 EXIT CH 27	613.7	1.322	3.45	0.426
TC EA36 EXIT ANN EF	612.0	1.410	1.77	0.218
TC EA27 EXIT ANN BC	616.3	1.147	6.04	0.745
TC EA28 EXIT ANN C	612.7	1.190	2.41	0.297

RESULTS FOR THERMOCOUPLES INSIDE HEATERS
FFM SERIES 2 TEST 10 RUN 204 DONE ON 30872 1316

DESCRIPTION	TEMP DEG F	STD DEV	RISE AB INLET T	NORMALIZED TEMP
TC R0118AB HTR 1 INT	625.1	1.332	14.84	1.831
TC R0219AB HTR 2 INT	786.1	1.531	175.87	21.701
TC R0418AB HTR 4 INT	614.1	1.447	3.87	0.478
TC R0518AB HTR 5 INT	611.5	1.625	1.30	0.160
TC R1019AB HEATER 10	613.6	1.372	3.38	0.417
TC R1218AB HEATER 12	608.3	0.618	-1.95	-0.241
TC R1318DE HEATER 13	609.8	1.241	-0.44	-0.054
TC R1418AB HEATER 14	610.2	1.213	-0.03	-0.004
TC R1518AB HEATER 15	609.8	1.227	-0.40	-0.049
TC R1618AB HEATER 16	610.2	1.546	-0.04	-0.005
TC R1718AB HEATER 17	611.4	1.429	1.19	0.147
TC R1817AB HEATER 18	611.0	1.312	0.77	0.095
TC R0118BC HEATER 1	619.9	1.223	9.66	1.192
TC R0118CD HEATER 1	620.4	1.410	10.19	1.257
TC R0118DE HEATER 1	619.2	1.530	8.91	1.099
TC R0219BC HEATER 2	783.9	1.409	173.67	21.430
TC R0418BC HEATER 4	611.7	1.391	1.49	0.184
TC R0418CD HEATER 4	612.1	1.363	1.90	0.234
TC R0418DE HEATER 4	610.9	1.568	0.65	0.080
TC R0518BC HEATER 5	611.2	1.359	0.99	0.122
TC R0518CD HEATER 5	614.5	1.543	4.29	0.529
TC R0718BC HEATER 7	648.6	1.229	38.31	4.727
TC R0718CD HEATER 7	650.5	1.399	40.29	4.971
TC R0718DE HEATER 7	659.4	1.372	49.13	6.062
TC R0818BC HEATER 8	621.8	1.363	11.56	1.426
TC R1019BC HEATER 10	611.6	1.410	1.35	0.167
TC R1718BC HEATER 17	611.6	1.341	1.40	0.173
TC R1918DE HEATER 19	649.9	1.392	39.65	4.893

OPERATING DATA FOR FFM SERIES 2 TEST 10 RUN 304
WHICH WAS DONE ON 30872 1411

DESCRIPTION	MEAN VALUE	STANDARD DEVIATION
HEATER 1 POWER KW	-0.04	0.005
HEATER 8,18,19 POWER	0.0	0.0
HTR 12,13,14 POWER	-0.11	0.015
HTR 2,7,9,17 POWER	-0.03	0.020
HTR 4,5,11,15 POWER	-0.08	0.0
HTR 3,6,10,16 POWER	17.57	0.021
TOTAL POWER	16.52	0.0
TEST SECT FLOW, GPM	54.24	0.073
TEST SECT INLET PR	34.21	0.099
TEST SECT OUTLET PR	8.72	0.050
TOTAL FLOW, GPM	112.63	1.324
PUMP OUTLET PR, PSI	35.70	0.059
PUMP SPEED, RPM	1501.43	1.134
BLOWER SPEED, RPM	40.69	1.159
AIR FLOW (200 F) CFM	0.98	0.008
TC 313 TEST SECT IN	601.36	0.990
TC 317 TEST SECT OUT	609.79	1.109
TC 300 PUMP OUTLET	602.06	1.010
TC 318 RADIATOR IN	609.70	1.377
TC 334 RADIATOR OUT	601.90	1.356
TC 336 PUMP INLET	601.93	1.298
TC 332 RAD AIR IN	300.65	2.757
TC 331 RAD AIR OUT	355.32	8.057

HEAT BALANCE ON SODIUM FLOWING THROUGH BUNDLE
HEAT SUPPLIED BY DUMMY FUEL RODS = 60001.52 BTU/HR
HEAT ADDED TO SODIUM = 61721.39 BTU/HR
PERCENT HEAT BALANCE = 102.87

RESULTS FOR UNGROUNDED JUNCTION THERMOCOUPLES
FFM SERIES 2 TEST 10 RUN 304 DONE ON 30872 1411

DESCRIPTION	TEMP DEG F	STD DEV	RISE AB INLET T	NORMALIZED TEMP
TC 1504U CH 37	601.0	1.109	-0.32	-0.039
TC 1706U CH 21	601.6	1.050	0.20	0.024
TC 1807U CH 24	601.4	1.109	0.05	0.006
TC 1108U CH 31	602.6	1.109	1.27	0.155
TC 0409U CH 13	618.3	1.077	16.97	2.071
TC 0509U CH 3	603.1	1.166	1.77	0.216
TC 1009U CH 29	601.7	1.161	0.37	0.045
TC 1409U CH 17	601.1	1.239	-0.25	-0.031
TC 1609U CH 21	601.0	1.064	-0.31	-0.038
TC 1914U CH 24	601.7	1.107	0.35	0.043
TC 0815U CH 8	605.6	1.032	4.26	0.520
TC 1316U CH 35	601.7	1.077	0.35	0.043
TC 1516U CH 37	601.4	1.131	0.07	0.009
TC 0817U CH 9	613.0	1.128	11.62	1.418
TC 1 17U CH 33	601.5	1.190	0.13	0.016
TC 1318U CH 34	601.3	1.319	-0.11	-0.013
TC 1718U CH 22	601.2	0.962	-0.12	-0.015
TC 1219U CH 32	601.7	1.542	0.30	0.037
TC 1819U CH 24	602.2	1.298	0.86	0.105
TC 1120U CH 31	605.3	1.403	3.91	0.477
TC 0421U CH 13	633.2	1.449	31.86	3.888
TC 0521U CH 3	608.7	1.378	7.38	0.901
TC 1021U CH 29	605.9	1.337	4.52	0.552
TC 1421U CH 17	601.7	1.294	0.32	0.039
TC 1621U CH 21	601.6	1.334	0.23	0.028

RESULTS FOR GROUNDED JUNCTION THERMOCOUPLES
FFM SERIES 2 TEST 10 RUN 304 DONE ON 30872 1411

DESCRIPTION	TEMP DEG F	STD DEV	RISE AB INLET T	NORMALIZED TEMP
TC 0118C CH 3	617.3	1.352	15.92	1.943
TC 0618D CH 4	602.5	1.345	1.13	0.138
TC 0618C CH 19	601.8	1.303	0.49	0.060
TC 0 19A HEATER 2	643.4	1.422	42.04	5.130
TC 0219B CH 10	649.8	1.263	48.48	5.916
TC 0919A HTR 9 EXT	638.9	1.326	37.55	4.582
TC 0919B CH 29	630.1	1.320	28.70	3.502
TC 0718C CH 5	606.0	1.309	4.65	0.567
TC 0718D CH 6	604.5	1.626	3.13	0.382
TC 0319A HEATER 3	677.3	1.383	75.94	9.267
TC 0319B CH 12	653.1	1.380	51.76	6.316

RESULTS FOR DUCT WALL THERMOCOUPLES
FFM SERIES 2 TEST 10 RUN 304 DONE ON 30872 1411

DESCRIPTION	TEMP DEG F	STD DEV	RISE AB INLET T	NORMALIZED TEMP
TC D0B04 DUCT B	601.5	0.911	0.13	0.016
TC D0E04 DUCT E	601.3	0.973	-0.08	-0.010
TC D0F04 DUCT F	601.4	0.984	0.05	0.006
TC D0B08 DUCT B	601.1	0.936	-0.25	-0.031
TC D0D08 DUCT D	601.2	1.091	-0.17	-0.021
TC D0F08 DUCT F	601.4	1.036	0.05	0.006
TC D0B12 DUCT B	601.5	0.973	0.12	0.015
TC D0E12 DUCT E	601.6	0.870	0.29	0.035
TC D0F12 DUCT F	601.6	1.123	0.22	0.027
TC D0B16 DUCT B	601.5	0.973	0.12	0.015
TC D0D16 DUCT D	601.6	1.047	0.23	0.028
TC D0F16 DUCT F	601.5	0.986	0.13	0.016
TC D0D18 DUCT D	602.0	1.100	0.60	0.073
TC D0E18 DUCT E	601.5	0.941	0.19	0.023
TC DAB18 DUCT AB	601.6	0.985	0.28	0.034
TC DDE18 DUCT DE	601.7	0.933	0.31	0.038
TC DEF18 DUCT EF	601.3	0.888	-0.04	-0.005
TC D0F18 DUCT F	601.2	1.076	-0.18	-0.022
TC DFA18 DUCT FA	601.3	0.999	-0.11	-0.013
TC D0B21 DUCT B	603.8	1.246	2.43	0.297
TC D0D21 DUCT D	602.9	1.297	1.52	0.185
TC D0F21 DUCT F	601.5	1.283	0.16	0.020
TC D0B23 DUCT B	603.7	1.166	2.34	0.286
TC D0D23 DUCT D	604.8	1.397	3.42	0.417
TC D0F23 DUCT F	601.9	1.212	0.51	0.062

RESULTS FOR THERMOCOUPLES IN CHANNEL EXITS
FFM SERIES 2 TEST 10 RUN 304 DONE ON 30872 1411

DESCRIPTION	TEMP DEG F	STD DEV	RISE AB INLET T	NORMALIZED TEMP
TC EC03 EXIT CH 3	605.4	1.397	4.04	0.493
TC EC16 EXIT CH 16	603.6	1.221	2.27	0.277
TC EC17 EXIT CH 17	602.2	1.308	0.83	0.101
TC EC34 EXIT CH 34	602.3	1.149	0.90	0.110
TC EC35 EXIT CH 35	602.1	1.308	0.77	0.094
TC EC36 EXIT CH 36	602.3	1.156	0.96	0.117
TC EC06 EXIT CH 6	608.7	1.192	7.37	0.899
TC EC08 EXIT CH 8	608.3	1.137	6.97	0.851
TC EC27 EXIT CH 27	606.4	1.191	5.07	0.619
TC EA36 EXIT ANN EF	602.4	0.977	1.09	0.133
TC EA27 EXIT ANN BC	607.2	1.292	5.85	0.714
TC EA28 EXIT ANN C	605.3	1.152	3.96	0.483

RESULTS FOR THERMOCOUPLES INSIDE HEATERS
FFM SERIES 2 TEST 10 RUN 304 DONE ON 30872 1411

DESCRIPTION	TEMP DEG F	STD DEV	RISE AB INLET T	NORMALIZED TEMP
TC R0118AB HTR 1 INT	606.6	1.116	5.29	0.646
TC R0219AB HTR 2 INT	615.4	1.404	14.02	1.711
TC R0418AB HTR 4 INT	635.6	1.352	34.20	4.173
TC R0518AB HTR 5 INT	612.7	1.293	11.37	1.387
TC R 019AB HEATER 10	633.8	1.375	32.40	3.954
TC R1218AB HEATER 12	601.3	1.889	-0.06	-0.007
TC R1318DE HEATER 13	601.9	1.308	0.59	0.072
TC R1418AB HEATER 14	602.2	1.190	0.88	0.107
TC R1518AB HEATER 15	601.9	1.337	0.50	0.061
TC R1618AB HEATER 16	601.8	1.306	0.46	0.056
TC R1718AB HEATER 17	601.8	1.465	0.47	0.057
TC R1817AB HEATER 18	601.8	1.352	0.44	0.054
TC R0118BC HEATER 1	613.1	1.071	11.71	1.429
TC R0118CD HEATER 1	614.0	1.120	12.62	1.540
TC R0118DE HEATER 1	630.8	1.234	29.41	3.589
TC R0219BC HEATER 2	614.3	1.105	12.96	1.581
TC R0418BC HEATER 4	627.8	1.155	26.42	3.224
TC R0418CD HEATER 4	627.3	1.121	25.92	3.163
TC R0418DE HEATER 4	613.1	1.133	11.71	1.429
TC R0518BC HEATER 5	612.5	1.187	11.17	1.363
TC R0518CD HEATER 5	609.0	1.112	7.66	0.935
TC R0718BC HEATER 7	608.7	1.354	7.37	0.899
TC R0718CD HEATER 7	609.6	1.063	8.22	1.003
TC R0718DE HEATER 7	612.8	0.943	11.43	1.395
TC R0818BC HEATER 8	608.4	1.182	7.05	0.860
TC R1019BC HEATER 10	635.8	1.191	34.46	4.205
TC R 1718BC HEATER 17	601.7	1.000	0.37	0.045
TC R1918DE HEATER 19	614.7	1.062	13.36	1.630

OPERATING DATA FOR FFM SERIES 2 TEST 10 RUN 404
WHICH WAS DONE ON 30872 1459

DESCRIPTION	MEAN VALUE	STANDARD DEVIATION
HEATER 1 POWER KW	-0.03	0.005
HEATER 8,18,19 POWER	0.0	0.0
HTR 12,13,14 POWER	-0.10	0.022
HTR 2,7,9,17 POWER	-0.04	0.0
HTR 4,5,11,15 POWER	17.84	0.0
HTR 3,6,10,16 POWER	-0.14	0.022
TOTAL POWER	16.52	0.0
TEST SECT FLOW, GPM	54.26	0.080
TEST SECT INLET PR	34.20	0.080
TEST SECT OUTLET PR	8.77	0.074
TOTAL FLOW, GPM	112.34	1.057
PUMP OUTLET PR, PSI	35.71	0.036
PUMP SPEED, RPM	1503.00	1.000
BLOWER SPEED, RPM	71.13	2.652
AIR FLOW (200 F) CFM	0.97	0.0
TC 313 TEST SECT IN	606.18	0.665
TC 317 TEST SECT OUT	614.95	0.582
TC 300 PUMP OUTLET	605.60	0.697
TC 318 RADIATOR IN	614.07	0.736
TC 334 RADIATOR OUT	603.80	1.095
TC 336 PUMP INLET	604.68	0.914
TC 332 RAD AIR IN	287.16	2.514
TC 331 RAD AIR OUT	346.86	28.708

HEAT BALANCE ON SODIUM FLOWING THROUGH BUNDLE
HEAT SUPPLIED BY DUMMY FUEL RODS = 60923.59 BTU/HR
HEAT ADDED TO SODIUM = 64149.81 BTU/HR
PERCENT HEAT BALANCE = 105.30

RESULTS FOR UNGROUNDED JUNCTION THERMOCOUPLES
FFM SERIES 2 TEST 10 RUN 404 DONE ON 30872 1459

DESCRIPTION	TEMP DEG F	STD DEV	RISE AB INLET T	NORMALIZED TEMP
TC 1504U CH 37	605.8	0.623	-0.39	-0.047
TC 1706U CH 21	605.5	0.724	-0.67	-0.080
TC 1807U CH 24	605.9	0.649	-0.30	-0.036
TC 1108U CH 31	607.4	0.450	1.19	0.143
TC 0409U CH 13	656.3	0.462	50.13	6.019
TC 0509U CH 3	631.7	0.584	25.54	3.066
TC 1009U CH 29	605.7	0.550	-0.52	-0.062
TC 1409U CH 17	606.4	0.694	0.19	0.023
TC 1609U CH 21	605.5	0.666	-0.68	-0.082
TC 1914U CH 24	605.7	0.724	-0.51	-0.061
TC 0815U CH 8	605.7	0.584	-0.44	-0.053
TC 1316U CH 35	608.7	0.616	2.48	0.298
TC 1516U CH 37	605.7	0.699	-0.49	-0.059
TC 0817U CH 9	606.0	0.485	-0.15	-0.018
TC 1217U CH 33	610.7	0.571	4.48	0.538
TC 1318U CH 34	609.0	0.480	2.85	0.342
TC 1718U CH 22	605.7	0.615	-0.48	-0.058
TC 1219U CH 32	607.6	0.491	1.42	0.170
TC 1819U CH 24	605.2	0.376	-0.98	-0.118
TC 1120U CH 31	613.5	0.678	7.32	0.879
TC 0421U CH 13	690.3	0.582	84.10	10.097
TC 0521U CH 3	636.3	0.530	30.07	3.610
TC 1021U CH 29	608.8	0.385	2.65	0.318
TC 1421U CH 17	612.4	0.385	6.19	0.743
TC 1621U CH 21	605.4	0.530	-0.79	-0.095

RESULTS FOR GROUNDED JUNCTION THERMOCOUPLES
FFM SERIES 2 TEST 10 RUN 404 DONE ON 30872 1459

DESCRIPTION	TEMP DEG F	STD DEV	RISE AB INLET T	NORMALIZED TEMP
TC 0118C CH 3	644.0	0.465	37.80	4.538
TC 0618D CH 4	612.8	0.465	6.60	0.792
TC 0618C CH 19	608.7	0.453	2.52	0.303
TC 0219A HEATER 2	612.2	0.369	6.06	0.728
TC 0219B CH 10	611.7	0.376	5.56	0.668
TC 0919A HTR 9 EXT	609.9	0.376	3.68	0.442
TC 0919B CH 29	608.3	0.595	2.12	0.255
TC 0718C CH 5	607.7	0.609	1.52	0.182
TC 0718D CH 6	607.8	0.465	1.64	0.197
TC 0319A HEATER 3	628.2	0.493	22.04	2.646
TC 0319B CH 12	623.7	0.465	17.54	2.106

RESULTS FOR DUCT WALL THERMCCOUPLES
FFM SERIES 2 TEST 10 RUN 404 DONE ON 30872 1459

DESCRIPTION	TEMP DEG F	STD DEV	RISE AB INLET T	NORMALIZED TEMP
TC D0B04 DUCT B	606.3	0.741	0.10	0.012
TC D0E04 DUCT E	606.1	0.712	-0.11	-0.013
TC D0F04 DUCT F	606.2	0.712	-0.01	-0.001
TC D0B08 DUCT B	605.9	0.697	-0.26	-0.031
TC D0D08 DUCT D	606.0	0.697	-0.18	-0.022
TC D0F08 DUCT F	606.2	0.741	0.02	0.002
TC D0B12 DUCT B	606.3	0.616	0.14	0.017
TC D0E12 DUCT E	606.5	0.912	0.32	0.038
TC D0F12 DUCT F	606.3	0.549	0.17	0.020
TC D0B16 DUCT B	606.2	1.053	0.04	0.005
TC D0D16 DUCT D	606.8	0.524	0.61	0.073
TC D0F16 DUCT F	606.3	0.862	0.07	0.008
TC D0D18 DUCT D	607.3	0.342	1.07	0.128
TC D0E18 DUCT E	606.8	0.617	0.57	0.068
TC DAB18 DUCT AB	606.4	0.741	0.26	0.031
TC DDE18 DUCT DE	606.9	0.741	0.70	0.084
TC DEF18 DUCT EF	606.6	0.342	0.41	0.049
TC D0F18 DUCT F	606.0	0.665	-0.18	-0.022
TC DFA18 DUCT FA	606.1	0.665	-0.10	-0.012
TC D0B21 DUCT B	607.1	0.369	0.94	0.113
TC D0D21 DUCT D	609.2	0.331	3.02	0.363
TC D0F21 DUCT F	605.7	0.550	-0.45	-0.054
TC D0B23 DUCT B	607.4	0.648	1.23	0.148
TC D0D23 DUCT D	611.1	0.498	4.90	0.588
TC D0F23 DUCT F	605.7	0.371	-0.47	-0.056

RESULTS FOR THERMOCOUPLES IN CHANNEL EXITS
FFM ERIES 2 TEST 10 RUN 404 DONE ON 30872 1459

DESCRIPTION	TEMP DEG F	STD DEV	RISE AB INLET T	NORMALIZED TEMP
TC EC03 EXIT CH 3	623.8	0.664	17.61	2.114
TC EC16 EXIT CH 16	619.6	0.668	13.38	1.606
TC EC17 EXIT CH 17	606.9	0.376	0.68	0.082
TC EC34 EXIT CH 34	608.2	0.369	1.98	0.238
TC EC35 EXIT CH 35	605.9	0.604	-0.30	-0.036
TC EC36 EXIT CH 36	606.1	0.550	-0.05	-0.006
TC EC06 EXIT CH 6	606.9	0.491	0.72	0.086
TC EC08 EXIT CH 8	607.3	0.491	1.13	0.136
TC EC27 EXIT CH 27	610.5	0.730	4.36	0.523
TC EA36 EXIT ANN EF	606.6	0.498	0.43	0.052
TC EA27 EXIT ANN BC	610.8	0.491	4.66	0.559
TC EA28 EXIT ANN C	611.9	0.581	5.73	0.688

RESULTS FOR THERMOCOUPLES INSIDE HEATERS
FFM SERIES 2 TEST 10 RUN 404 DONE ON 30872 1459

DESCRIPTION	TEMP DEG F	STD DEV	RISE AB INLET T	NORMALIZED TEMP
TC R0118AB HTR 1 INT	617.0	0.690	10.86	1.304
TC R0219AB HTR 2 INT	606.6	0.550	0.41	0.049
TC R0418AB HTR 4 INT	858.9	0.441	252.72	30.342
TC R0518AB HTR 5 INT	646.8	0.550	40.57	4.871
TC R1019AB HEATER 10	610.3	0.566	4.10	0.492
TC R 1218AB HEATER 12	611.5	1.922	5.35	0.642
TC R1318DE HEATER 13	611.3	0.566	5.12	0.615
TC R1418AB HEATER 14	606.9	0.369	0.72	0.086
TC R1518AB HEATER 15	606.2	0.582	-0.02	-0.002
TC R1618AB HEATER 16	605.2	0.453	-0.98	-0.118
TC R1718AB HEATER 17	605.5	0.435	-0.64	-0.077
TC R1817AB HEATER 18	605.2	0.376	-1.00	-0.120
TC R0118BC HEATER 1	628.9	0.670	22.72	2.728
TC R0118CD HEATER 1	629.7	0.563	23.55	2.827
TC R0118DE HEATER 1	647.4	0.556	41.18	4.944
TC R0219BC HEATER 2	607.6	0.742	1.42	0.170
TC R0418BC HEATER 4	819.2	0.507	212.98	25.571
TC R0418CD HEATER 4	808.5	0.666	202.33	24.292
TC R0418DE HEATER 4	830.2	0.694	224.04	26.899
TC R0518BC HEATER 5	645.6	0.434	39.42	4.733
TC R0518CD HEATER 5	625.6	0.458	19.38	2.327
TC R0718BC HEATER 7	607.6	0.448	1.40	0.168
TC R0718CD HEATER 7	607.2	0.395	1.00	0.120
TC R0718DE HEATER 7	606.1	0.360	-0.08	-0.010
TC R0818BC HEATER 8	605.9	0.701	-0.23	-0.028
TC R1019BC HEATER 10	611.4	0.724	5.21	0.626
TC R1718BC HEATER 17	605.4	0.507	-0.80	-0.096
TC R1918DE HEATER 19	605.3	0.787	-0.88	-0.106

OPERATING DATA FOR FFM SERIES 2 TEST 10 RUN 504
WHICH WAS DONE ON 30972 831

DESCRIPTION	MEAN VALUE	STANDARD DEVIATION
HEATER 1 POWER KW	-0.04	0.004
HEATER 8,18,19 POWER	0.0	0.0
HTR 12,13,14 POWER	-0.11	0.016
HTR 2,7,9,17 POWER	-0.07	0.016
HTR 4,5,11,15 POWER	17.84	0.0
HTR 3,6,10,16 POWER	-0.14	0.022
TOTAL POWER	16.52	0.0
TEST SECT FLOW, GPM	54.17	0.108
TEST SECT INLET PR	33.85	0.071
TEST SECT OUTLET PR	8.77	0.064
TOTAL FLOW, GPM	113.77	1.783
PUMP OUTLET PR, PSI	35.70	0.062
PUMP SPEED, RPM	1495.17	0.983
BLOWER SPEED, RPM	53.99	1.265
AIR FLOW (200 F) CFM	1.03	0.005
TC 313 TEST SECT IN	624.05	0.334
TC 317 TEST SECT OUT	632.01	0.451
TC 300 PUMP OUTLET	623.43	0.334
TC 318 RADIATOR IN	631.58	0.451
TC 334 RADIATOR OUT	624.40	0.390
TC 336 PUMP INLET	623.91	0.281
TC 332 RAD AIR IN	335.76	2.193
TC 331 RAD AIR OUT	363.57	3.975

HEAT BALANCE ON SODIUM FLOWING THROUGH BUNDLE
HEAT SUPPLIED BY DUMMY FUEL RODS = 60923.59 BTU/HR
HEAT ADDED TO SODIUM = 57849.42 BTU/HR
PERCENT HEAT BALANCE = 94.95

RESULTS FOR UNGROUNDED JUNCTION THERMOCOUPLES
FFM SERIES 2 TEST 1C RUN 504 DONE ON 30972 831

DESCRIPTION	TEMP DEG F	STD DEV	RISE AB INLET T	NORMALIZED TEMP
TC 1504U CH 37	623.7	0.328	-0.38	-0.045
TC 1706U CH 21	623.7	0.470	-0.37	-0.044
TC 1807U CH 24	623.7	0.315	-0.33	-0.039
TC 1108U CH 31	624.0	0.186	-0.06	-0.007
TC 0409U CH 13	625.1	0.199	1.04	0.124
TC 0509U CH 3	678.2	0.454	54.19	6.464
TC 1009U CH 29	623.6	0.416	-0.46	-0.055
TC 1409U CH 17	632.2	0.339	8.19	0.977
TC 1609U CH 21	624.1	0.327	0.03	0.004
TC 1914L CH 24	623.6	0.416	-0.46	-0.055
TC 0815L CH 8	623.5	0.444	-0.54	-0.064
TC 1316U CH 35	632.7	0.201	8.66	1.033
TC 1516U CH 37	625.2	0.416	1.14	0.136
TC 0817U CH 9	623.5	0.597	-0.54	-0.064
TC 1217U CH 33	628.0	0.297	3.95	0.471
TC 1318U CH 34	635.2	0.226	11.14	1.329
TC 1718U CH 22	625.4	0.327	1.40	0.167
TC 1219U CH 32	627.7	0.552	3.63	0.433
TC 1819U CH 24	623.8	0.644	-0.29	-0.035
TC 1120U CH 31	626.3	0.550	2.27	0.271
TC 0421U CH 13	633.5	0.581	9.42	1.124
TC 0521U CH 3	711.8	0.691	87.79	10.472
TC 1021U CH 29	625.1	0.536	1.10	0.131
TC 1421U CH 17	644.5	0.691	20.42	2.436
TC 1621U CH 21	626.9	0.511	2.82	0.336

RESULTS FOR GROUNDED JUNCTION THERMOCOUPLES
FFM SERIES 2 TEST 10 RUN 504 DONE ON 30972 831

DESCRIPTION	TEMP DEG F	STD DEV	RISE AB INLET T	NORMALIZED TEMP
TC 0118C CH 3	661.1	0.815	37.03	4.417
TC 0618D CH 4	678.4	0.642	54.39	6.488
TC 0618C CH 19	662.4	0.680	38.32	4.571
TC 0219A HEATER 2	625.6	0.626	1.60	0.191
TC 0219B CH 10	625.1	0.540	1.02	0.122
TC 0919A HTR 9 EXT	623.8	0.523	-0.27	-0.032
TC 0919B CH 29	623.8	0.731	-0.26	-0.031
TC 0718C CH 5	628.5	0.598	4.42	0.527
TC 0718D CH 6	629.4	0.619	5.38	0.642
TC 0319A HEATER 3	627.2	0.642	3.16	0.377
TC 0319B CH 12	626.6	0.509	2.52	0.301

RESULTS FOR DUCT WALL THERMOCOUPLES
FFM SERIES 2 TEST 10 RUN 504 DONE ON 30972 831

DESCRIPTION	TEMP DEG F	STD DEV	RISE AB INLET T	NORMALIZED TEMP
TC D0B04 DUCT B	623.8	0.203	-0.24	-0.029
TC D0E04 DUCT E	624.0	0.302	-0.07	-0.008
TC D0F04 DUCT F	623.7	0.354	-0.32	-0.038
TC D0B08 DUCT B	623.6	0.315	-0.41	-0.049
TC D0D08 DUCT D	623.5	0.358	-0.53	-0.063
TC D0F08 DUCT F	623.9	0.354	-0.12	-0.014
TC D0B12 DUCT B	623.6	0.355	-0.44	-0.052
TC D0E12 DUCT E	625.6	0.317	1.51	0.180
TC D0F12 DUCT F	624.1	0.317	0.01	0.001
TC D0B16 DUCT B	623.4	0.359	0.60	-0.072
TC D0D16 DUCT D	625.1	0.496	1.07	0.128
TC D0F16 DUCT F	624.2	0.350	0.17	0.020
TC D0D18 DUCT D	625.1	0.538	1.05	0.125
TC D0E18 DUCT E	627.3	0.313	3.21	0.383
TC DAB18 DUCT AB	623.7	0.524	-0.31	-0.037
TC DDE18 DUCT DE	625.5	0.359	1.47	0.175
TC DEF18 DUCT EF	624.3	0.410	0.21	0.025
TC D0F18 DUCT F	624.8	0.351	0.70	0.084
TC DFA18 DUCT FA	623.9	0.410	-0.19	-0.023
TC D0B21 DUCT B	623.7	0.434	-0.31	-0.037
TC D0D21 DUCT D	625.3	0.640	1.27	0.152
TC D0F21 DUCT F	625.1	0.372	1.08	0.129
TC D0B23 DUCT B	623.4	0.679	-0.62	-0.074
TC D0D23 DUCT D	625.8	0.724	1.70	0.203
TC D0F23 DUCT F	624.1	0.581	0.04	0.005

RESULTS FOR THERMOCOUPLES IN CHANNEL EXITS
FFM SERIES 2 TEST 10 RUN 504 DONE ON 30972 831

DESCRIPTION	TEMP DEG F	STD DEV	RISE AB INLET T	NORMALIZED TEMP
TC EC03 EXIT CH 3	683.8	0.666	59.76	7.129
TC EC16 EXIT CH 16	659.1	0.531	35.03	4.179
TC EC17 EXIT CH 17	630.5	0.659	6.49	0.774
TC EC34 EXIT CH 34	629.7	0.594	5.69	0.679
TC EC35 EXIT CH 35	625.8	0.435	1.74	0.208
TC EC36 EXIT CH 36	625.6	0.581	1.54	0.184
TC EC06 EXIT CH 6	626.2	0.646	2.14	0.255
TC EC08 EXIT CH 8	624.2	0.290	0.14	0.017
TC EC27 EXIT CH 27	627.1	0.475	3.01	0.359
TC EA36 EXIT ANN EF	626.9	0.498	2.83	0.338
TC EA27 EXIT ANN BC	626.9	0.297	2.82	0.336
TC EA28 EXIT ANN C	628.8	0.234	4.74	0.565

RESULTS FOR THERMOCOUPLES INSIDE HEATERS
FFM ERIES 2 TEST 10 RUN 504 DONE ON 30972 831

DESCRIPTION	TEMP DEG F	STD DEV	RISE AB INLET T	NORMALIZED TEMP
TC R0118AB HTR 1 INT	652.2	0.409	28.14	3.357
TC R0219AB HTR 2 INT	624.1	0.683	0.08	0.010
TC R0418AB HTR 4 INT	643.8	0.581	19.72	2.352
TC R0518AB HTR 5 INT	810.8	0.631	186.78	22.281
TC R1019AB HEATER 10	623.9	0.674	-0.19	-0.023
TC R1218AB HEATER 12	629.3	1.315	5.27	0.629
TC R1318DE HEATER 13	635.5	0.499	11.47	1.368
TC R1418AB HEATER 14	628.3	0.680	4.24	0.506
TC R1518AB HEATER 15	648.6	0.631	24.60	2.935
TC R1618AB HEATER 16	623.9	0.640	-0.11	-0.013
TC R1718AB HEATER 17	624.8	0.720	0.80	0.095
TC R1817AB HEATER 18	623.1	0.761	-0.93	-0.111
TC R0118BC HEATER 1	660.0	0.419	36.00	4.294
TC R0118CD HEATER 1	659.1	0.237	35.06	4.182
TC R0118DE HEATER 1	644.5	0.444	20.47	2.442
TC R0219BC HEATER 2	624.3	0.465	0.28	0.033
TC R0418BC HEATER 4	649.8	0.342	25.72	3.068
TC R0418CD HEATER 4	650.9	0.444	26.87	3.205
TC R0418DE HEATER 4	663.7	0.450	39.63	4.727
TC R0518BC HEATER 5	811.1	0.514	187.03	22.311
TC R0518CD HEATER 5	806.9	0.395	182.84	21.811
TC R0718BC HEATER 7	625.2	0.619	1.15	0.137
TC R0718CD HEATER 7	625.3	0.558	1.22	0.146
TC R0718DE HEATER 7	624.3	0.325	0.21	0.025
TC R0818BC HEATER 8	623.4	0.466	-0.67	-0.080
TC R1019BC HEATER 10	623.4	0.437	-0.61	-0.073
TC R1718BC HEATER 17	625.0	0.444	0.97	0.116
TC R1918DE HEATER 19	623.5	0.533	-0.52	-0.062

OPERATING DATA FOR FFM SERIES 2 TEST 10 RUN 604
WHICH WAS DONE ON 30972 919

DESCRIPTION	MEAN VALUE	STANDARD DEVIATION
HEATER 1 POWER KW	-0.04	0.004
HEATER 8,18,19 POWER	0.0	0.0
HTR 12,13,14 POWER	-0.11	0.016
HTR 2,7,9,17 POWER	-0.04	0.0
HTR 4,5,11,15 POWER	-0.09	0.016
HTR 3,6,10,16 POWER	17.56	0.039
TOTAL POWER	16.44	0.124
TEST SECT FLOW, GPM	54.09	0.106
TEST SECT INLET PR	34.01	0.054
TEST SECT OUTLET PR	8.78	0.042
TOTAL FLOW, GPM	112.53	1.017
PUMP OUTLET PR, PSI	35.76	0.087
PUMP SPEED, RPM	1496.33	1.033
BLOWER SPEED, RPM	33.96	2.381
AIR FLOW (200 F) CFM	1.02	0.005
TC 313 TEST SECT IN	595.91	0.121
TC 317 TEST SECT OUT	604.21	0.373
TC 300 PUMP OUTLET	595.65	0.408
TC 318 RADIATOR IN	603.82	0.302
TC 334 RADIATOR OUT	596.29	0.226
TC 336 PUMP INLET	595.76	0.285
TC 332 RAD AIR IN	299.74	2.693
TC 331 RAD AIR OUT	338.36	4.105

HEAT BALANCE ON SODIUM FLOWING THROUGH BUNDLE
HEAT SUPPLIED BY DUMMY FUEL RODS = 59967.39 BTU/HR
HEAT ADDED TO SODIUM = 60693.20 BTU/HR
PERCENT HEAT BALANCE = 101.21

RESULTS FOR UNGROUNDED JUNCTION THERMOCOUPLES
FFM SERIES 2 TEST 10 RUN 604 DONE ON 30972 919

DESCRIPTION	TEMP DEG F	STD DEV	RISE AB INLET T	NORMALIZED TEMP
TC 1504U CH 37	595.5	0.348	-0.45	-0.055
TC 1706U CH 21	616.7	0.402	20.78	2.534
TC 1807U CH 24	595.5	0.352	-0.37	-0.045
TC 1108U CH 31	595.5	0.441	-0.45	-0.055
TC 0409U CH 13	595.6	0.335	-0.32	-0.039
TC 0509U CH 3	598.0	0.158	2.14	0.261
TC 1009U CH 29	595.4	0.335	-0.52	-0.063
TC 1409U CH 17	596.0	0.131	0.07	0.009
TC 1609U CH 21	606.3	0.230	10.37	1.264
TC 1914U CH 24	595.4	0.335	-0.52	-0.063
TC 0815U CH 8	595.4	0.302	-0.54	-0.066
TC 1316U CH 35	596.3	0.302	0.43	0.052
TC 1516U CH 37	607.8	0.302	11.91	1.452
TC 0817U CH 9	595.8	0.171	-0.08	-0.010
TC 1217U CH 33	595.9	0.302	0.01	0.001
TC 1318U CH 34	596.7	0.388	0.76	0.093
TC 1718U CH 22	625.9	0.511	30.00	3.658
TC 1219U CH 32	596.1	0.614	0.18	0.022
TC 1819U CH 24	596.8	0.564	0.94	0.115
TC 1120U CH 31	595.6	0.517	-0.29	-0.035
TC 0421U CH 13	596.7	0.639	0.76	0.093
TC 0521U CH 3	602.2	0.640	6.28	0.766
TC 1021U CH 29	595.7	0.769	-0.19	-0.023
TC 1421U CH 17	599.1	0.438	3.20	0.390
TC 1621U CH 21	632.0	0.767	36.12	4.404

RESULTS FOR GROUNDED JUNCTION THERMOCOUPLES
FFM SERIES 2 TEST 10 RUN 604 DONE ON 30972 919

DESCRIPTION	TEMP DEG F	STD DEV	RISE AB INLET T	NORMALIZED TEMP
TC 0118C CH 3	609.8	0.528	13.89	1.694
TC 0618D CH 4	667.8	0.663	71.84	8.760
TC 0618C CH 19	665.4	0.601	69.48	8.472
TC 0219A HEATER 2	596.7	0.639	0.76	0.093
TC 0219B CH 10	596.1	0.779	0.20	0.024
TC 0919A HTR 9 EXT	595.7	0.560	-0.24	-0.029
TC 0919B CH 29	595.7	0.734	-0.24	-0.029
TC 0718C CH 5	615.5	0.468	19.61	2.391
TC 0718D CH 6	619.2	0.302	23.25	2.835
TC 0319A HEATER 3	596.0	0.457	0.13	0.016
TC 0319B CH 12	595.9	0.734	-0.04	-0.005

RESULTS FOR DUCT WALL THERMCCOUPLES
FFM SERIES 2 TEST 10 RUN 604 DONE ON 30972 919

DESCRIPTION	TEMP DEG F	STD DEV	RISE AB INLET T	NORMALIZED TEMP
TC DOB04 DUCT B	595.6	0.339	-0.35	-0.043
TC DOE04 DUCT E	595.4	0.278	-0.52	-0.063
TC DOF04 DUCT F	595.5	0.227	-0.37	-0.045
TC DOB08 DUCT B	595.8	0.233	-0.10	-0.012
TC DOD08 DUCT D	595.3	0.258	-0.58	-0.071
TC DOF08 DUCT F	595.6	0.428	-0.31	-0.038
TC DOB12 DUCT B	595.4	0.339	-0.52	-0.063
TC DOE12 DUCT E	595.7	0.247	-0.24	-0.029
TC DOF12 DUCT F	595.9	0.158	-0.01	-0.001
TC DOB16 DUCT B	595.7	0.172	-0.20	-0.024
TC DOD16 DUCT D	595.6	0.213	-0.32	-0.039
TC DOF16 DUCT F	599.5	0.335	3.58	0.437
TC DOD18 DUCT D	596.1	0.172	0.15	0.018
TC DOE18 DUCT E	596.0	0.352	0.08	0.010
TC DAB18 DUCT AB	596.1	0.285	0.20	0.024
TC DDE18 DUCT DE	595.6	0.258	-0.28	-0.034
TC DEF18 DUCT EF	596.6	0.464	0.67	0.082
TC DOF18 DUCT F	601.4	0.344	5.47	0.667
TC DFA18 DUCT FA	599.6	0.476	3.66	0.446
TC DOB21 DUCT B	595.6	0.827	-0.35	-0.043
TC DOD21 DUCT D	595.4	0.535	-0.48	-0.059
TC DOF21 DUCT F	604.3	0.528	8.39	1.023
TC DOB23 DUCT B	595.2	0.849	-0.69	-0.084
TC DOD23 DUCT D	595.9	0.827	-0.05	-0.006
TC DOF23 DUCT F	601.1	0.598	5.19	0.633

RESULTS FOR THERMOCOUPLES IN CHANNEL EXITS
FFM SERIES 2 TEST 10 RUN 604 DONE ON 30972 919

DESCRIPTION	TEMP DEG F	STD DEV	RISE AB INLET T	NORMALIZED TEMP
TC EC03 EXIT CH 3	605.3	0.627	9.44	1.151
TC EC16 EXIT CH 16	602.5	0.614	6.58	0.802
TC EC17 EXIT CH 17	605.0	0.614	9.06	1.105
TC EC34 EXIT CH 34	603.7	0.257	7.80	0.951
TC EC35 EXIT CH 35	607.6	0.639	11.68	1.424
TC EC36 EXIT CH 36	605.6	0.797	9.69	1.182
TC EC06 EXIT CH 6	610.4	0.716	14.52	1.771
TC EC08 EXIT CH 8	596.2	0.435	0.27	0.033
TC EC27 EXIT CH 27	597.7	0.584	1.83	0.223
TC EA36 EXIT ANN EF	605.8	0.435	9.89	1.206
TC EA27 EXIT ANN BC	598.0	0.508	2.07	0.252
TC EA28 EXIT ANN C	598.1	0.657	2.24	0.273

RESULTS FOR THERMOCOUPLES INSIDE HEATERS
FFM SERIES 2 TEST 1C RUN 604 DONE ON 30972 919

DESCRIPTION	TEMP DEG F	STD DEV	RISE AB INLET T	NORMALIZED TEMP
TC R0118AB HTR 1 INT	624.9	0.344	29.04	3.541
TC R0219AB HTR 2 INT	596.8	0.554	0.94	0.115
TC R0418AB HTR 4 INT	598.6	0.636	2.74	0.334
TC R0518AB HTR 5 INT	604.4	0.734	8.47	1.033
TC R1019AB HEATER 10	595.7	0.655	-0.25	-0.030
TC R1218AB HEATER 12	596.7	0.961	0.82	0.100
TC R1318DE HEATER 13	596.5	0.528	0.59	0.072
TC R1418AB HEATER 14	597.8	0.645	1.94	0.237
TC R1518AB HEATER 15	648.7	0.668	52.82	6.441
TC R1618AB HEATER 16	602.7	0.639	6.81	0.830
TC R1718AB HEATER 17	623.5	0.779	27.57	3.362
TC R1817AB HEATER 18	595.7	0.755	-0.21	-0.026
TC R0118BC HEATER 1	615.8	0.488	19.86	2.422
TC R0118CD HEATER 1	614.8	0.613	18.86	2.300
TC R0118DE HEATER 1	604.1	0.466	8.18	0.997
TC R0219BC HEATER 2	598.0	0.395	2.08	0.254
TC R0418BC HEATER 4	599.3	0.473	3.36	0.410
TC R0418CD HEATER 4	599.2	0.471	3.25	0.396
TC R0418DE HEATER 4	599.0	0.474	3.12	0.380
TC R0518BC HEATER 5	606.0	0.433	10.12	1.234
TC R0518CD HEATER 5	620.3	0.285	24.35	2.969
TC R0718BC HEATER 7	604.8	0.384	8.90	1.085
TC R0718CD HEATER 7	603.3	0.420	7.39	0.901
TC R0718DE HEATER 7	598.4	0.285	2.50	0.305
TC R0818BC HEATER 8	595.7	0.432	-0.19	-0.023
TC R1019BC HEATER 10	595.4	0.386	-0.51	-0.062
TC R1718BC HEATER 17	623.4	0.274	27.45	3.347
TC R1918DE HEATER 19	595.7	0.408	-0.20	-0.024

OPERATING DATA FOR FFM SERIES 2 TEST 1C RUN 704
WHICH WAS DONE ON 30972 1003

DESCRIPTION	MEAN VALUE	STANDARD DEVIATION
HEATER 1 POWER KW	-0.03	0.005
HEATER 8,18,19 POWER	0.0	0.0
HTR 12,13,14 POWER	-0.11	0.018
HTR 2,7,9,17 POWER	17.38	0.033
HTR 4,5,11,15 POWER	-0.09	0.018
HTR 3,6,10,16 POWER	-0.13	0.018
TOTAL POWER	16.57	0.107
TEST SECT FLOW, GPM	54.13	0.121
TEST SECT INLET PR	34.07	0.115
TEST SECT OUTLET PR	8.78	0.059
TOTAL FLOW, GPM	113.96	0.805
PUMP OUTLET PR, PSI	35.79	0.054
PUMP SPEED, RPM	1497.40	0.548
BLOWER SPEED, RPM	39.54	1.403
AIR FLOW (200 F) CFM	1.00	0.011
TC 313 TEST SECT IN	612.80	0.889
TC 317 TEST SECT OUT	621.11	0.878
TC 300 PUMP OUTLET	612.57	1.109
TC 318 RADIATOR IN	621.07	0.694
TC 334 RADIATOR OUT	613.22	1.305
TC 336 PUMP INLET	612.66	1.034
TC 332 RAD AIR IN	309.87	6.094
TC 331 RAD AIR OUT	348.40	7.444

HEAT BALANCE ON SODIUM FLOWING THROUGH BUNDLE
HEAT SUPPLIED BY DUMMY FUEL RODS = 59352.66 BTU/HR
HEAT ADDED TO SODIUM = 60533.81 BTU/HR
PERCENT HEAT BALANCE = 101.99

RESULTS FOR UNGROUNDED JUNCTION THERMOCOUPLES
FFM SERIES 2 TEST 10 RUN 704 DONE ON 30972 1003

DESCRIPTION	TEMP DEG F	STD DEV	RISE AB INLET T	NORMALIZED TEMP
TC 1504U CH 37	612.3	1.060	-0.45	-0.055
TC 1706U CH 21	616.2	0.848	3.43	0.421
TC 1807U CH 24	637.9	0.926	25.10	3.081
TC 1108U CH 31	612.7	0.820	-0.11	-0.013
TC 0409U CH 13	612.5	0.740	-0.31	-0.038
TC 0509U CH 3	612.7	0.837	-0.11	-0.013
TC 1009U CH 29	612.3	0.622	-0.49	-0.060
TC 1409U CH 17	612.8	0.851	-0.02	-0.002
TC 1609U CH 21	613.6	0.820	0.77	0.095
TC 1914U CH 24	614.0	0.962	1.18	0.145
TC 0815U CH 8	617.8	1.231	5.05	0.620
TC 1316U CH 35	612.8	0.926	-0.03	-0.004
TC 1516U CH 37	612.6	1.042	-0.16	-0.020
TC 0817U CH 9	615.2	0.987	2.43	0.298
TC 1217U CH 33	612.8	0.694	-0.03	-0.004
TC 1318U CH 34	612.7	0.694	-0.13	-0.016
TC 1718U CH 22	636.3	0.878	23.46	2.879
TC 1219U CH 32	612.9	0.866	0.15	0.018
TC 1819U CH 24	634.0	0.691	21.24	2.607
TC 1120U CH 31	612.9	0.699	0.09	0.011
TC 0421U CH 13	613.5	0.714	0.67	0.082
TC 0521U CH 3	613.8	0.465	1.02	0.125
TC 1021U CH 29	612.6	0.493	-0.24	-0.029
TC 1421U CH 17	612.9	0.613	0.15	0.018
TC 1621U CH 21	628.4	0.784	15.62	1.917

RESULTS FOR GROUNDED JUNCTION THERMOCOUPLES
FFM SERIES 2 TEST 10 RUN 704 DONE ON 30972 1003

DESCRIPTION	TEMP DEG F	STD DEV	RISE AB INLET T	NORMALIZED TEMP
TC 0118C CH 3	621.0	0.837	8.16	1.002
TC 0618D CH 4	618.6	0.711	5.76	0.707
TC 0618C CH 19	616.2	0.626	3.42	0.420
TC 0219A HEATER 2	620.8	0.463	8.04	0.987
TC 0219B CH 10	617.2	0.670	4.42	0.542
TC 0919A HTR 9 EXT	612.9	0.699	0.14	0.017
TC 0919B CH 29	613.0	0.743	0.19	0.023
TC 0718C CH 5	699.2	0.698	86.40	10.604
TC 0718D CH 6	683.9	0.863	71.14	8.731
TC 0319A HEATER 3	613.3	0.613	0.45	0.055
TC 0319B CH 12	613.2	0.795	0.37	0.045

RESULTS FOR DUCT WALL THERMOCOUPLES
FFM SERIES 2 TEST 10 RUN 704 DONE ON 30972 1003

DESCRIPTION	TEMP DEG F	STD DEV	RISE AB INLET T	NORMALIZED TEMP
TC DOB04 DUCT B	612.4	0.710	-0.35	-0.043
TC DOE04 DUCT E	612.3	0.718	-0.51	-0.063
TC DOF04 DUCT F	612.4	0.703	-0.35	-0.043
TC DOB08 DUCT B	612.8	0.848	-0.02	-0.002
TC DOD08 DUCT D	612.6	0.714	-0.20	-0.025
TC DOF08 DUCT F	612.5	0.733	-0.25	-0.031
TC DOB12 DUCT B	612.8	1.109	-0.04	-0.005
TC DOE12 DUCT E	612.6	0.740	-0.21	-0.026
TC DOF12 DUCT F	612.8	0.545	-0.05	-0.006
TC DOB16 DUCT B	615.6	0.700	2.82	0.346
TC DOD16 DUCT D	612.5	0.816	-0.33	-0.040
TC DOF16 DUCT F	612.8	0.563	0.03	0.004
TC DOD18 DUCT D	612.8	0.687	0.05	0.006
TC DOE18 DUCT E	612.5	0.816	-0.33	-0.040
TC DAB18 DUCT AB	616.8	0.837	3.95	0.485
TC DDE18 DUCT DE	612.5	0.816	-0.33	-0.040
TC DEF18 DUCT EF	612.5	0.692	-0.31	-0.038
TC DOF18 DUCT F	613.0	0.848	0.20	0.025
TC DFA18 DUCT FA	613.9	0.714	1.08	0.133
TC DOB21 DUCT B	613.2	0.489	0.40	0.049
TC DOD21 DUCT D	612.6	0.489	-0.17	-0.021
TC DOF21 DUCT F	613.8	0.550	0.95	0.117
TC DOB23 DUCT B	613.4	0.609	0.56	0.069
TC DOD23 DUCT D	612.7	0.454	-0.08	-0.010
TC DOF23 DUCT F	618.3	0.549	5.53	0.679

RESULTS FOR THERMOCOUPLES IN CHANNEL EXITS
FFM SERIES 2 TEST 10 RUN 704 DONE ON 30972 1003

DESCRIPTION	TEMP DEG F	STD DEV	RISE AB INLET T	NORMALIZED TEMP
TC EC03 EXIT CH 3	614.4	0.583	1.58	0.194
TC EC16 EXIT CH 16	613.7	0.626	0.92	0.113
TC EC17 EXIT CH 17	614.0	0.686	1.24	0.152
TC EC34 EXIT CH 34	614.5	0.550	1.70	0.209
TC EC35 EXIT CH 35	614.8	0.592	2.04	0.250
TC EC36 EXIT CH 36	616.8	0.550	3.95	0.485
TC EC06 EXIT CH 6	668.2	0.725	55.44	6.804
TC EC08 EXIT CH 8	616.3	0.829	3.51	0.431
TC EC27 EXIT CH 27	613.6	0.999	0.85	0.104
TC EA36 EXIT ANN EF	615.9	0.968	3.13	0.384
TC EA27 EXIT ANN BC	614.7	1.093	1.90	0.233
TC EA28 EXIT ANN C	613.2	0.974	0.37	0.045

RESULTS FOR THERMOCOUPLES INSIDE HEATERS
FFM SERIES 2 TEST 10 RUN 704 DONE ON 30972 1003

DESCRIPTION	TEMP DEG F	STD DEV	RISE AB INLET T	NORMALIZED TEMP
TC R0118AB HTR 1 INT	633.1	0.939	20.34	2.496
TC R0219AB HTR 2 INT	638.8	0.667	25.95	3.185
TC R0418AB HTR 4 INT	613.9	0.743	1.06	0.130
TC R0518AB HTR 5 INT	614.7	0.811	1.89	0.232
TC R1019AB HEATER 10	613.0	0.743	0.19	0.023
TC R1218AB HEATER 12	612.4	1.271	-0.44	-0.054
TC R1318DE HEATER 13	612.9	0.613	0.15	0.018
TC R1418AB HEATER 14	612.7	0.607	-0.12	-0.015
TC R1518AB HEATER 15	615.9	0.686	3.06	0.376
TC R1618AB HEATER 16	614.4	0.711	1.56	0.191
TC R1718AB HEATER 17	637.6	0.661	24.78	3.041
TC R1817AB HEATER 18	620.0	0.825	7.17	0.880
TC R0118BC HEATER 1	625.5	1.028	12.72	1.561
TC R0118CD HEATER 1	625.0	0.974	12.20	1.497
TC R0118DE HEATER 1	619.4	1.066	6.59	0.809
TC R0219BC HEATER 2	641.9	1.148	29.12	3.574
TC R0418BC HEATER 4	613.4	1.169	0.63	0.077
TC R0418CD HEATER 4	613.7	1.028	0.92	0.113
TC R0418DE HEATER 4	612.8	1.022	0.02	0.002
TC R0518BC HEATER 5	614.5	0.974	1.72	0.211
TC R0518CD HEATER 5	618.8	0.773	6.00	0.736
TC R0718BC HEATER 7	786.1	1.065	173.30	21.269
TC R0718CD HEATER 7	781.9	0.863	169.12	20.756
TC R0718DE HEATER 7	758.9	0.829	146.09	17.930
TC R0818BC HEATER 8	613.4	1.063	0.58	0.071
TC R1019BC HEATER 10	612.1	0.974	-0.68	-0.083
TC R1718BC HEATER 17	639.2	1.135	26.43	3.244
TC R1918DE HEATER 19	617.8	0.866	5.05	0.620

OPERATING CATA FOR FFM SERIES 2 TEST 10 RUN 804
WHICH WAS CCNE CN 30972 1035

DESCRIPTION	MEAN VALUE	STANDARD DEVIATION
HEATER 1 POWER KW	-0.03	0.005
HEATER 8,18,19 POWER	17.79	0.028
HTR 12,13,14 POWER	-0.10	0.022
HTR 2,7,9,17 POWER	-0.04	0.0
HTR 4,5,11,15 PCWER	-0.10	0.022
HTR 3,6,10,16 PCWER	-0.13	0.018
TOTAL PCWER	16.52	0.0
TEST SECT FLOW, GPM	54.40	0.121
TEST SECT INLET PR	34.17	0.106
TEST SECT CUTLET PR	8.80	0.030
TOTAL FLOW, GPM	114.16	1.356
PUMP CUTLET PR, PSI	35.97	0.024
PUMP SPEEC, RPM	1502.80	1.095
BLOWER SPEED, RPM	47.70	1.228
AIR FLOW (200 F) CFM	1.00	0.010
TC 313 TEST SECT IN	597.35	0.149
TC 317 TEST SECT CUT	605.73	0.095
TC 300 PUMP OUTLET	597.13	0.149
TC 318 RADIATOR IN	605.70	0.095
TC 334 RADIATOR OUT	597.35	0.159
TC 336 PUMP INLET	597.09	0.244
TC 332 RAD AIR IN	293.44	2.377
TC 331 RAC AIR CUT	342.03	8.718

HEAT BALANCE ON SCDIUM FLOWING THRCUGH BUNDLE
HEAT SUPPLIED BY DUMMY FUEL RODS = 60752.82 BTU/HR
HEAT ADDED TO SODIUM = 61607.42 BTU/HR
PERCENT HEAT BALANCE = 101.41

RESULTS FOR UNGROUNDED JUNCTION THERMOCOUPLES
FFM SERIES 2 TEST 10 RUN 804 DONE ON 30972 1035

DESCRIPTION	TEMP DEG F	STD DEV	RISE AB INLET T	NORMALIZED TEMP
TC 1504U CH 37	596.9	0.130	-0.40	-0.048
TC 1706U CH 21	597.0	0.209	-0.36	-0.044
TC 1807U CH 24	597.0	0.174	-0.30	-0.036
TC 1 08U CH 31	597.3	0.189	-0.08	-0.010
TC 0409U CH 13	597.1	0.130	-0.26	-0.031
TC 0509U CH 3	597.3	0.130	-0.06	-0.007
TC 1009U CH 29	597.2	0.155	-0.12	-0.015
TC 1409U CH 17	597.3	0.120	-0.01	-0.001
TC 1609U CH 21	597.4	0.140	0.01	0.001
TC 1914U CH 24	618.4	0.149	21.10	2.553
TC 0815U CH 8	661.9	0.149	64.54	7.810
TC 1316U CH 35	598.7	0.130	1.33	0.161
TC 1516U CH 37	600.6	0.120	3.21	0.388
TC 0817U CH 9	655.9	0.182	58.58	7.089
TC 1217U CH 33	597.4	0.095	0.05	0.006
TC 1318U CH 34	598.2	0.130	0.84	0.102
TC 1718U CH 22	599.6	0.155	2.25	0.272
TC 1219U CH 32	596.9	0.270	-0.47	-0.057
TC 1819U CH 24	610.3	0.320	12.97	1.569
TC 1120U CH 31	596.4	0.697	-0.93	-0.113
TC 0421U CH 13	596.6	0.359	-0.73	-0.088
TC 0521U CH 3	597.0	0.357	-0.34	-0.041
TC 1021U CH 29	597.0	0.309	-0.38	-0.046
TC 1421U CH 17	597.8	0.149	0.49	0.059
TC 1621U CH 21	600.0	0.531	2.64	0.319

RESULTS FOR GROUNDED JUNCTION THERMOCOUPLES
FFM SERIES 2 TEST 10 RUN 804 DONE ON 30972 1035

DESCRIPTION	TEMP DEG F	STD DEV	RISE AB INLET T	NORMALIZED TEMP
TC 0118C CH 3	597.2	0.357	-0.14	-0.017
TC 0618D CH 4	596.6	0.318	-0.79	-0.096
TC 0618C CH 19	597.1	0.102	-0.21	-0.025
TC 0219A HEATER 2	602.6	0.386	5.27	0.638
TC 0219B CH 10	603.3	0.282	6.00	0.726
TC 0919A HTR 9 EXT	598.2	0.418	0.83	0.100
TC 0919B CH 29	597.8	0.335	0.42	0.051
TC 0718C CH 5	598.2	0.386	0.88	0.107
TC 0718D CH 6	598.3	0.324	0.90	0.109
TC 0319A HEATER 3	596.8	0.270	-0.57	-0.069
TC 0319B CH 12	597.1	0.374	-0.25	-0.030

RESULTS FOR DUCT WALL THERMCCOUPLES
FFM SERIES 2 TEST 10 RUN 804 DONE ON 30972 1035

DESCRIPTION	TEMP DEG F	STD DEV	RISE AB INLET T	NORMALIZED TEMP
TC DOB04 DUCT B	601.8	0.159	4.49	0.543
TC DOE04 DUCT E	597.2	0.159	-0.12	-0.015
TC DOF04 DUCT F	597.4	0.311	0.03	0.004
TC DOB08 DUCT B	602.1	0.130	4.78	0.578
TC DOD08 DUCT D	597.2	0.095	-0.15	-0.018
TC DOF08 DUCT F	597.1	0.174	-0.22	-0.027
TC DOB12 DUCT B	612.3	0.149	14.99	1.814
TC DOE12 DUCT E	597.2	0.130	-0.16	-0.019
TC DOF12 DUCT F	600.8	0.140	3.48	0.421
TC DOB16 DUCT B	621.8	0.149	24.43	2.956
TC DOD16 DUCT D	597.1	0.209	-0.26	-0.031
TC DOF16 DUCT F	601.3	0.149	4.00	0.484
TC DOD18 DUCT D	597.4	0.239	0.09	0.011
TC DOE18 DUCT E	598.8	0.149	1.40	0.169
TC DAB18 DUCT AB	609.6	0.140	12.26	1.484
TC DDE18 DUCT DE	597.4	0.174	0.08	0.010
TC DEF18 DUCT EF	599.2	0.149	1.82	0.220
TC DOF18 DUCT F	601.4	0.130	4.07	0.493
TC DFA18 DUCT FA	602.7	0.120	5.39	0.652
TC DOB21 DUCT B	608.5	0.324	11.20	1.355
TC DOD21 DUCT D	597.1	0.265	-0.25	-0.030
TC DOF21 DUCT F	601.3	0.324	3.92	0.474
TC DOB23 DUCT B	614.7	0.453	17.32	2.096
TC DOD23 DUCT D	597.5	0.102	0.18	0.022
TC DOF23 DUCT F	603.2	0.320	5.89	0.713

RESULTS FOR THERMOCOUPLES IN CHANNEL EXITS
FFM SERIES 2 TEST 10 RUN 804 DONE ON 30972 1035

DESCRIPTION	TEMP DEG F	STD DEV	RISE AB INLET T	NORMALIZED TEMP
TC EC03 EXIT CH 3	597.5	0.150	0.14	0.017
TC EC16 EXIT CH 16	598.6	0.309	1.24	0.150
TC EC17 EXIT CH 17	599.7	0.301	2.39	0.289
TC EC34 EXIT CH 34	602.1	0.207	4.76	0.576
TC EC35 EXIT CH 35	602.3	0.316	4.93	0.597
TC EC36 EXIT CH 36	605.6	0.318	8.28	1.002
TC EC06 EXIT CH 6	603.6	0.386	6.28	0.760
TC EC08 EXIT CH 8	632.4	0.283	35.05	4.241
TC EC27 EXIT CH 27	604.3	0.242	7.00	0.847
TC EA36 EXIT ANN EF	605.4	0.145	8.01	0.969
TC EA27 EXIT ANN BC	607.9	0.102	10.57	1.279
TC EA28 EXIT ANN C	601.2	0.371	3.87	0.468

RESULTS FOR THERMOCOUPLES INSIDE HEATERS
FFM SERIES 2 TEST 10 RUN 804 DONE ON 30972 1035

DESCRIPTION	TEMP DEG F	STD DEV	RISE AB INLET T	NORMALIZED TEMP
TC R0118AB HTR 1 INT	597.3	0.174	0.0	0.0
TC R0219AB HTR 2 INT	612.8	0.268	15.50	1.876
TC R0418AB HTR 4 INT	597.0	0.357	-0.34	-0.041
TC R0518AB HTR 5 INT	597.0	0.309	-0.38	-0.046
TC R 019AB HEATER 10	597.4	0.285	0.08	0.010
TC R1218AB HEATER 12	598.5	1.866	1.15	0.139
TC R1318DE HEATER 13	597.8	0.263	0.44	0.053
TC R 1418AB HEATER 14	599.6	0.320	2.27	0.275
TC R1518AB HEATER 15	597.2	0.320	-0.11	-0.013
TC R1618AB HEATER 16	602.2	0.263	4.87	0.589
TC R1718AB HEATER 17	599.2	0.265	1.83	0.221
TC R1817AB HEATER 18	609.1	0.265	11.78	1.425
TC R0118BC HEATER 1	597.1	0.382	-0.21	-0.025
TC R0118CD HEATER 1	597.4	0.277	0.06	0.007
TC R0118DE HEATER 1	597.5	0.277	0.16	0.019
TC R0219BC HEATER 2	607.2	0.516	9.81	1.187
TC R0418BC HEATER 4	597.1	0.301	-0.22	-0.027
TC R0418CD HEATER 4	597.0	0.149	-0.30	-0.036
TC R0418DE HEATER 4	596.9	0.341	-0.46	-0.056
TC R0518BC HEATER 5	597.0	0.527	-0.39	-0.047
TC R0518CD HEATER 5	597.0	0.330	-0.37	-0.045
TC R0718BC HEATER 7	603.2	0.340	5.82	0.704
TC R0718CD HEATER 7	604.2	0.305	6.81	0.824
TC R0718DE HEATER 7	614.4	0.207	17.08	2.067
TC R0818BC HEATER 8	824.1	0.540	226.74	27.437
TC R1019BC HEATER 10	596.8	0.383	-0.57	-0.069
TC R 1718BC HEATER 17	599.1	0.277	1.79	0.217
TC R1918DE HEATER 19	623.6	0.325	26.28	3.180

OPERATING DATA FOR FFM SERIES 2 TEST 1C RUN 904
WHICH WAS DONE ON 30972 1101

DESCRIPTION	MEAN VALUE	STANDARD DEVIATION
HEATER 1 POWER KW	-0.04	0.005
HEATER 8,18,19 POWER	0.0	0.0
HTR 12,13,14 POWER	-0.09	0.018
HTR 2,7,9,17 POWER	17.09	0.022
HTR 4,5,11,15 POWER	-0.08	0.0
HTR 3,6,10,16 POWER	-0.14	0.022
TOTAL POWER	16.23	0.107
TEST SECT FLOW, GPM	54.43	0.090
TEST SECT INLET PR	34.22	0.073
TEST SECT OUTLET PR	8.76	0.049
TOTAL FLOW, GPM	112.46	1.244
PUMP OUTLET PR, PSI	36.04	0.081
PUMP SPEED, RPM	1504.60	0.894
BLOWER SPEED, RPM	42.68	1.057
AIR FLOW (200 F) CFM	0.99	0.011
TC 313 TEST SECT IN	602.97	0.149
TC 317 TEST SECT OUT	611.26	0.182
TC 300 PUMP OUTLET	602.73	0.250
TC 318 RADIATOR IN	611.32	0.189
TC 334 RADIATOR OUT	603.36	0.166
TC 336 PUMP INLET	603.17	0.193
TC 332 RAD AIR IN	303.49	0.428
TC 331 RAD AIR OUT	343.15	16.476

HEAT BALANCE ON SODIUM FLOWING THROUGH BUNDLE
HEAT SUPPLIED BY DUMMY FUEL RODS = 58362.34 BTU/HR
HEAT ADDED TO SODIUM = 60879.34 BTU/HR
PERCENT HEAT BALANCE = 104.31

RESULTS FOR UNGROUNDED JUNCTION THERMOCOUPLES
FFM SERIES 2 TEST 10 RUN 904 DONE ON 30972 1101

DESCRIPTION	TEMP DEG F	STD DEV	RISE AB INLET T	NORMALIZED TEMP
TC 1504U CH 37	602.9	0.310	-0.11	-0.014
TC 1706U CH 21	602.9	0.311	-0.04	-0.005
TC 1807U CH 24	603.1	0.149	0.12	0.015
TC 1108U CH 31	603.4	0.193	0.40	0.050
TC 0409U CH 13	603.0	0.182	0.06	0.008
TC 0509U CH 3	602.9	0.193	-0.02	-0.003
TC 1009U CH 29	603.3	0.149	0.37	0.047
TC 1409U CH 17	603.0	0.149	0.05	0.006
TC 1609U CH 21	602.9	0.301	-0.05	-0.006
TC 1914U CH 24	610.2	0.170	7.27	0.915
TC 0815U CH 8	613.7	0.193	10.70	1.346
TC 1316U CH 35	602.9	0.305	-0.04	-0.005
TC 1516U CH 37	603.6	0.265	0.67	0.084
TC 0817U CH 9	629.7	0.358	26.74	3.365
TC 1217U CH 33	602.9	0.166	-0.04	-0.005
TC 1318U CH 34	602.8	0.166	-0.14	-0.018
TC 1718U CH 22	603.9	0.311	0.94	0.118
TC 1219U CH 32	602.8	0.451	-0.13	-0.016
TC 1819U CH 24	607.9	0.635	4.97	0.625
TC 1120U CH 31	603.6	0.778	0.65	0.082
TC 0421U CH 13	604.6	0.585	1.68	0.211
TC 0521U CH 3	603.2	0.651	0.20	0.025
TC 1021U CH 29	604.5	0.436	1.56	0.196
TC 1421U CH 17	603.3	0.635	0.29	0.036
TC 1621U CH 21	604.6	0.635	1.59	0.200

RESULTS FOR GROUNDED JUNCTION THERMOCOUPLES
FFM SERIES 2 TEST 10 RUN 904 DONE ON 30972 1101

DESCRIPTION	TEMP DEG F	STD DEV	RISE AB INLET T	NORMALIZED TEMP
TC 0118C CH 3	603.4	0.436	0.46	0.058
TC 0618D CH 4	602.8	0.411	-0.19	-0.024
TC 0618C CH 19	603.0	0.436	0.03	0.004
TC 0219A HEATER 2	630.2	0.798	27.20	3.423
TC 0219B CH 10	637.4	0.388	34.44	4.334
TC 0919A HTR 9 EXT	677.4	0.635	74.39	9.361
TC 0919B CH 29	653.7	0.451	50.77	6.389
TC 0718C CH 5	603.7	0.411	0.71	0.089
TC 0718D CH 6	603.3	0.686	0.32	0.040
TC 0319A HEATER 3	607.9	0.699	4.95	0.623
TC 0319B CH 12	607.3	0.617	4.37	0.550

RESULTS FOR DUCT WALL THERMOCOUPLES
FFM SERIES 2 TEST 10 RUN 904 DONE ON 30972 1101

DESCRIPTION	TEMP DEG F	STD DEV	RISE AB INLET T	NORMALIZED TEMP
TC D0B04 DUCT B	603.4	0.310	0.46	0.058
TC D0E04 DUCT E	603.2	0.127	0.19	0.024
TC D0F04 DUCT F	602.9	0.206	-0.02	-0.003
TC D0B08 DUCT B	608.1	0.301	5.18	0.652
TC D0D08 DUCT D	603.2	0.189	0.25	0.031
TC D0F08 DUCT F	603.1	0.193	0.17	0.021
TC D0B12 DUCT B	609.3	0.359	6.35	0.799
TC D0E12 DUCT E	603.1	0.145	0.11	0.014
TC D0F12 DUCT F	603.4	0.095	0.45	0.057
TC D0B16 DUCT B	609.6	0.193	6.65	0.837
TC D0D16 DUCT D	603.0	0.080	0.06	0.008
TC D0F16 DUCT F	604.3	0.080	1.36	0.171
TC D0D18 DUCT D	603.4	0.146	0.48	0.060
TC D0E18 DUCT E	603.0	0.182	0.06	0.008
TC DAB18 DUCT AB	607.8	0.145	4.79	0.603
TC DDE18 DUCT DE	603.0	0.258	-0.01	-0.001
TC DEF18 DUCT EF	603.5	0.189	0.58	0.073
TC D0F18 DUCT F	604.5	0.189	1.53	0.193
TC DFA18 DUCT FA	605.3	0.182	2.34	0.294
TC D0B21 DUCT B	612.7	0.427	9.71	1.222
TC D0D21 DUCT D	603.5	0.370	0.49	0.062
TC D0F21 DUCT F	604.9	0.651	1.93	0.243
TC D0B23 DUCT B	614.4	0.436	11.48	1.445
TC D0D23 DUCT D	604.3	0.533	1.31	0.165
TC D0F23 DUCT F	606.0	0.435	3.03	0.381

RESULTS FOR THERMOCOUPLES IN CHANNEL EXITS
FFM SERIES 2 TEST 10 RUN 904 DONE ON 30972 1101

DESCRIPTION	TEMP DEG F	STD DEV	RISE AB INLET T	NORMALIZED TEMP
TC EC03 EXIT CH 3	603.3	0.453	0.37	0.047
TC EC16 EXIT CH 16	604.1	0.605	1.09	0.137
TC EC17 EXIT CH 17	604.3	0.779	1.37	0.172
TC EC34 EXIT CH 34	605.7	0.436	2.73	0.344
TC EC35 EXIT CH 35	606.1	0.520	3.09	0.389
TC EC36 EXIT CH 36	608.8	0.607	5.87	0.739
TC EC06 EXIT CH 6	609.4	0.520	6.47	0.814
TC EC08 EXIT CH 8	620.0	0.210	17.08	2.149
TC EC27 EXIT CH 27	614.4	0.671	11.40	1.434
TC EA36 EXIT ANN EF	608.4	0.280	5.43	0.683
TC EA27 EXIT ANN BC	617.5	0.370	14.56	1.832
TC EA28 EXIT ANN C	607.7	0.336	4.72	0.594

RESULTS FOR THERMOCOUPLES INSIDE HEATERS
FFM SERIES 2 TEST 10 RUN 904 DONE ON 30972 1101

DESCRIPTION	TEMP DEG F	STD DEV	RISE AB INLET T	NORMALIZED TEMP
TC R0118AB HTR 1 INT	603.0	0.289	0.06	0.008
TC R0219AB HTR 2 INT	618.4	0.574	15.41	1.939
TC R0418AB HTR 4 INT	603.7	0.325	0.72	0.091
TC R0518AB HTR 5 INT	603.3	0.585	0.28	0.035
TC R1019AB HEATER 10	632.3	0.674	29.31	3.688
TC R1218AB HEATER 12	602.6	0.873	-0.35	-0.044
TC R1318DE HEATER 13	602.9	0.574	-0.07	-0.009
TC R1418AB HEATER 14	603.4	0.522	0.42	0.053
TC R1518AB HEATER 15	603.1	0.451	0.17	0.021
TC R1618AB HEATER 16	606.0	0.605	3.02	0.380
TC R1718AB HEATER 17	603.9	0.574	0.91	0.114
TC R1817AB HEATER 18	607.6	0.586	4.67	0.588
TC R0118BC HEATER 1	603.7	0.140	0.77	0.097
TC R0118CD HEATER 1	604.0	0.294	1.03	0.130
TC R0118DE HEATER 1	604.6	0.234	1.61	0.203
TC R0219BC HEATER 2	614.1	0.095	11.13	1.401
TC R0418BC HEATER 4	603.7	0.303	0.73	0.092
TC R0418CD HEATER 4	603.6	0.132	0.63	0.079
TC R0418DE HEATER 4	603.5	0.294	0.50	0.063
TC R0518BC HEATER 5	603.5	0.303	0.53	0.067
TC R0518CD HEATER 5	603.5	0.303	0.53	0.067
TC R0718BC HEATER 7	607.7	0.234	4.69	0.590
TC R0718CD HEATER 7	608.6	0.222	5.63	0.708
TC R0718DE HEATER 7	619.6	0.280	16.68	2.099
TC R0818BC HEATER 8	635.7	0.294	32.75	4.121
TC R1019BC HEATER 10	621.0	0.215	18.07	2.274
TC R1718BC HEATER 17	604.0	0.215	1.07	0.135
TC R1918DE HEATER 19	621.8	0.244	18.88	2.376

OPERATING DATA FOR FFM SERIES 2 TEST 10 RUN 1004
WHICH WAS DONE ON 30972 1132

DESCRIPTION	MEAN VALUE	STANDARD DEVIATION
HEATER 1 POWER KW	-0.03	0.005
HEATER 8,18,19 POWER	0.0	0.0
HTR 12,13,14 POWER	-0.12	0.0
HTR 2,7,9,17 POWER	-0.03	0.015
HTR 4,5,11,15 POWER	-0.09	0.020
HTR 3,6,10,16 POWER	17.53	0.031
TOTAL POWER	16.42	0.128
TEST SECT FLOW, GPM	54.42	0.042
TEST SECT INLET PR	34.25	0.129
TEST SECT OUTLET PR	8.77	0.056
TOTAL FLOW, GPM	113.34	1.919
PUMP OUTLET PR, PSI	36.00	0.078
PUMP SPEED, RPM	1504.57	0.787
BLOWER SPEED, RPM	52.27	3.031
AIR FLOW (200 F) CFM	0.99	0.005
TC 313 TEST SECT IN	604.59	0.569
TC 317 TEST SECT OUT	612.93	0.538
TC 300 PUMP OUTLET	604.43	0.513
TC 318 RADIATOR IN	612.51	0.430
TC 334 RADIATOR OUT	604.19	0.497
TC 336 PUMP INLET	604.02	0.392
TC 332 RAD AIR IN	300.16	1.641
TC 331 RAD AIR OUT	376.48	8.566

HEAT BALANCE ON SODIUM FLOWING THROUGH BUNDLE
HEAT SUPPLIED BY DUMMY FUEL RODS = 59864.95 BTU/HR
HEAT ADDED TO SODIUM = 61208.59 BTU/HR
PERCENT HEAT BALANCE = 102.24

RESULTS FOR UNGROUNDED JUNCTION THERMOCOUPLES
FFM SERIES 2 TEST 10 RUN 1004 DONE ON 30972 1132

DESCRIPTION	TEMP DEG F	STD DEV	RISE AB INLET T	NORMALIZED TEMP
TC 1504U CH 37	604.1	0.427	-0.48	-0.059
TC 1706U CH 21	604.6	0.473	0.0	0.0
TC 1807U CH 24	603.8	0.438	-0.81	-0.099
TC 1108U CH 31	605.9	0.543	1.29	0.158
TC 0409U CH 13	608.6	0.538	4.02	0.493
TC 0509U CH 3	604.5	0.567	-0.06	-0.007
TC 1009U CH 29	639.4	0.476	34.86	4.274
TC 1409U CH 17	604.6	0.553	-0.01	-0.001
TC 1609U CH 21	604.6	0.566	-0.03	-0.004
TC 1914U CH 24	609.7	0.361	5.14	0.630
TC 0815U CH 8	607.1	0.540	2.50	0.306
TC 1316U CH 35	604.5	0.590	-0.05	-0.006
TC 1516U CH 37	604.3	0.504	-0.27	-0.033
TC 0817U CH 9	611.0	0.401	6.40	0.785
TC 1217U CH 33	604.1	0.346	-0.48	-0.059
TC 1318U CH 34	604.5	0.552	-0.11	-0.013
TC 1718U CH 22	605.1	0.379	0.52	0.064
TC 1219U CH 32	604.4	0.889	-0.17	-0.021
TC 1819U CH 24	607.4	0.852	2.79	0.342
TC 1120U CH 31	606.5	0.916	1.91	0.234
TC 0421U CH 13	609.7	0.686	5.10	0.625
TC 0521U CH 3	604.9	0.816	0.27	0.033
TC 1021U CH 29	648.4	0.898	43.79	5.368
TC 1421U CH 17	604.4	0.780	-0.21	-0.026
TC 1621U CH 21	605.7	0.736	1.11	0.136

RESULTS FOR GROUNDED JUNCTION THERMOCOUPLES
FFM SERIES 2 TEST 10 RUN 1004 DONE ON 30972 1132

DESCRIPTION	TEMP DEG F	STD DEV	RISE AB INLET T	NORMALIZED TEMP
TC 0118C CH 3	605.1	0.868	0.51	0.063
TC 0618D CH 4	604.4	0.770	-0.16	-0.020
TC 0618C CH 19	604.2	0.665	-0.38	-0.047
TC 0219A HEATER 2	618.8	0.737	14.21	1.742
TC 0219B CH 10	622.1	0.745	17.55	2.152
TC 0919A HTR 9 EXT	649.3	0.632	44.73	5.484
TC 0919B CH 29	652.8	0.813	48.17	5.905
TC 0718C CH 5	604.3	0.707	-0.30	-0.037
TC 0518D CH 6	604.4	0.791	-0.22	-0.027
TC 0319A HEATER 3	626.8	0.764	22.25	2.728
TC 0319B CH 12	631.8	0.865	27.24	3.339

RESULTS FOR DUCT WALL THERMOCOUPLES
FFM SERIES 2 TEST 10 RUN 1004 DONE ON 30972 1132

DESCRIPTION	TEMP DEG F	STD DEV	RISE AB INLET T	NORMALIZED TEMP
TC D0B04 DUCT B	604.7	0.546	0.10	0.012
TC D0E04 DUCT E	604.0	0.409	-0.54	-0.066
TC D0F04 DUCT F	604.6	0.566	-0.03	-0.004
TC D0B08 DUCT B	610.2	0.590	5.58	0.684
TC D0D08 DUCT D	604.8	0.495	0.22	0.027
TC D0F08 DUCT F	604.3	0.495	-0.25	-0.031
TC D0B12 DUCT B	609.6	0.459	5.01	0.614
TC D0E12 DUCT E	604.3	0.500	-0.28	-0.034
TC D0F12 DUCT F	604.6	0.519	0.01	0.001
TC D0B16 DUCT B	608.6	0.453	4.06	0.498
TC D0D16 DUCT D	605.1	0.422	0.53	0.065
TC D0F16 DUCT F	605.5	0.459	0.91	0.112
TC D0D18 DUCT D	605.6	0.554	1.03	0.126
TC D0E18 DUCT E	604.7	0.600	0.12	0.015
TC DAB18 DUCT AB	607.7	0.453	3.11	0.381
TC DDE18 DUCT DE	605.1	0.594	0.53	0.065
TC DEF18 DUCT EF	604.8	0.593	0.16	0.020
TC D0F18 DUCT F	605.2	0.500	0.59	0.072
TC DFA18 DUCT FA	606.5	0.433	1.90	0.233
TC D0B21 DUCT B	621.6	0.820	17.01	2.085
TC D0D21 DUCT D	607.5	0.883	2.96	0.363
TC D0F21 DUCT F	606.1	0.784	1.51	0.185
TC D0B23 DUCT B	618.2	0.875	13.61	1.669
TC D0D23 DUCT D	610.3	0.794	5.74	0.704
TC D0F23 DUCT F	606.8	0.815	2.23	0.273

RESULTS FOR THERMOCOUPLES IN CHANNEL EXITS
FFM SERIES 2 TEST 10 RUN 1004 DONE ON 30972 1132

DESCRIPTION	TEMP DEG F	STD DEV	RISE AB INLET T	NORMALIZED TEMP
TC EC03 EXIT CH 3	604.9	0.820	0.34	0.042
TC EC16 EXIT CH 16	604.7	0.742	0.15	0.018
TC EC17 EXIT CH 17	605.5	0.686	0.90	0.110
TC EC34 EXIT CH 34	606.8	0.784	2.26	0.277
TC EC35 EXIT CH 35	606.8	0.770	2.22	0.272
TC EC36 EXIT CH 36	608.3	0.871	3.73	0.457
TC EC06 EXIT CH 6	606.3	0.899	1.71	0.210
TC EC08 EXIT CH 8	613.4	0.731	8.77	1.075
TC EC27 EXIT CH 27	617.1	0.549	12.49	1.531
TC EA36 EXIT ANN EF	607.8	0.834	3.19	0.391
TC EA27 EXIT ANN BC	617.7	0.558	13.14	1.611
TC EA28 EXIT ANN C	612.3	0.495	7.71	0.945

RESULTS FOR THERMOCOUPLES INSIDE HEATERS
FFM SERIES 2 TEST 10 RUN 1004 DONE ON 30972 1132

DESCRIPTION	TEMP DEG F	STD DEV	RISE AB INLET T	NORMALIZED TEMP
TC R0118AB HTR 1 INT	604.2	0.446	-0.39	-0.048
TC R0219AB HTR 2 INT	605.6	0.632	1.00	0.123
TC R0418AB HTR 4 INT	605.7	0.666	1.08	0.132
TC R0518AB HTR 5 INT	604.9	0.723	0.29	0.036
TC R1019AB HEATER 10	913.5	233.412	308.89	37.868
TC R1218AB HEATER 12	603.6	1.013	-1.02	-0.125
TC R1318DE HEATER 13	604.4	0.686	-0.17	-0.021
TC R1418AB HEATER 14	604.5	0.820	-0.09	-0.011
TC R1518AB HEATER 15	604.3	0.701	-0.28	-0.034
TC R1618AB HEATER 16	606.6	0.686	2.05	0.251
TC R1718AB HEATER 17	605.4	0.892	0.78	0.096
TC R1817AB HEATER 18	608.0	0.862	3.38	0.414
TC R0118BC HEATER 1	604.4	0.614	-0.22	-0.027
TC R0118CD HEATER 1	604.6	0.675	0.03	0.004
TC R0118DE HEATER 1	605.1	0.615	0.55	0.067
TC R0219BC HEATER 2	605.2	0.645	0.59	0.072
TC R0418BC HEATER 4	605.1	0.495	0.56	0.069
TC R0418CD HEATER 4	605.1	0.486	0.48	0.059
TC R0418DE HEATER 4	604.5	0.563	-0.06	-0.007
TC R0518BC HEATER 5	604.6	0.731	-0.01	-0.001
TC R0518CD HEATER 5	604.1	0.563	-0.51	-0.063
TC R0718BC HEATER 7	604.3	0.672	-0.28	-0.034
TC R0718CD HEATER 7	604.4	0.695	-0.20	-0.025
TC R0718DE HEATER 7	604.7	0.659	0.15	0.018
TC R0818BC HEATER 8	620.7	0.467	16.15	1.980
TC R1019BC HEATER 10	645.0	85.148	40.42	4.955
TC R1718BC HEATER 17	604.7	0.614	0.08	0.010
TC R1918DE HEATER 19	607.1	0.646	2.50	0.306

OPERATING DATA FOR FFM SERIES 2 TEST 10 RUN 1104
WHICH WAS DONE ON 30972 1225

DESCRIPTION	MEAN VALUE	STANDARD DEVIATION
HEATER 1 POWER KW	-0.04	0.005
HEATER 8,18,19 POWER	0.0	0.0
HTR 12,13,14 POWER	-0.10	0.022
HTR 2,7,9,17 POWER	-0.04	0.0
HTR 4,5,11,15 POWER	17.78	0.022
HTR 3,6,10,16 POWER	-0.14	0.022
TOTAL POWER	16.52	0.0
TEST SECT FLOW, GPM	54.35	0.076
TEST SECT INLET PR	34.28	0.110
TEST SECT OUTLET PR	8.74	0.022
TOTAL FLOW, GPM	113.94	0.979
PUMP OUTLET PR, PSI	35.99	0.042
PUMP SPEED, RPM	1504.40	0.548
BLOWER SPEED, RPM	37.39	1.072
AIR FLOW (200 F) CFM	0.99	0.004
TC 313 TEST SECT IN	612.98	0.268
TC 317 TEST SECT OUT	621.60	0.390
TC 300 PUMP OUTLET	613.10	0.155
TC 318 RADIATOR IN	621.24	0.376
TC 334 RADIATOR OUT	612.94	0.509
TC 336 PUMP INLET	613.12	0.381
TC 332 RAD AIR IN	301.17	1.405
TC 331 RAD AIR OUT	374.55	8.035

HEAT BALANCE ON SODIUM FLOWING THROUGH BUNDLE
HEAT SUPPLIED BY DUMMY FUEL RODS = 60718.70 BTU/HR
HEAT ADDED TO SODIUM = 63044.20 BTU/HR
PERCENT HEAT BALANCE = 103.83

RESULTS FOR UNGROUNDED JUNCTION THERMOCOUPLES
FFM SERIES 2 TEST 10 RUN 1104 DONE ON 30972 1225

DESCRIPTION	TEMP DEG F	STD DEV	RISE AB INLET T	NORMALIZED TEMP
TC 1504U CH 37	612.9	0.174	-0.05	-0.006
TC 1706U CH 21	612.9	0.376	-0.04	-0.005
TC 1807U CH 24	613.3	0.248	0.35	0.042
TC 1 08U CH 31	665.0	0.528	51.99	6.262
TC 0409U CH 13	652.2	0.397	39.20	4.722
TC 0509U CH 3	613.3	0.155	0.32	0.039
TC 1009U CH 29	621.4	0.278	8.42	1.014
TC 1409U CH 17	613.3	0.359	0.32	0.039
TC 1609U CH 21	613.3	0.250	0.34	0.041
TC 1914U CH 24	614.1	0.503	1.12	0.135
TC 0815U CH 8	613.7	0.376	0.71	0.086
TC 1 16U CH 35	613.7	0.410	0.70	0.084
TC 1516U CH 37	613.1	0.381	0.09	0.011
TC 0817U CH 9	614.9	0.381	1.94	0.234
TC 1217U CH 33	615.0	0.377	2.06	0.248
TC 1318U CH 34	613.2	0.278	0.22	0.026
TC 1718U CH 22	613.0	0.545	0.0	0.0
TC 1219U CH 32	614.7	0.418	1.68	0.202
TC 1819U CH 24	614.1	0.280	1.13	0.136
TC 1120U CH 31	671.8	0.430	58.80	7.083
TC 0421U CH 13	642.0	0.511	29.00	3.493
TC 0 21U CH 3	616.4	0.298	3.39	0.408
TC 1021U CH 29	634.5	0.478	21.51	2.591
TC 1421U CH 17	613.8	0.307	0.85	0.102
TC 1621U CH 21	613.8	0.386	0.83	0.100

RESULTS FOR GROUNDED JUNCTION THERMOCOUPLES
FFM SERIES 2 TEST 10 RUN 1104 DONE ON 30972 1225

DESCRIPTION	TEMP DEG F	STD DEV	RISE AB INLET T	NORMALIZED TEMP
TC 0118C CH 3	618.3	0.363	5.31	0.640
TC 0618D CH 4	613.7	0.299	0.74	0.089
TC 0618C CH 19	613.9	0.431	0.95	0.114
TC 0219A HEATER 2	619.0	0.206	6.07	0.731
TC 0219B CH 10	620.7	0.298	7.71	0.929
TC 0919A HTR 9 EXT	629.3	0.280	16.36	1.971
TC 0919B CH 29	631.5	0.367	18.53	2.232
TC 0718C CH 5	613.7	0.352	0.71	0.086
TC 0718D CH 6	614.2	0.871	1.22	0.147
TC 0319A HEATER 3	659.0	0.299	45.98	5.538
TC 0319B CH 12	665.8	0.275	52.77	6.356

RESULTS FOR DUCT WALL THERMOCOUPLES
FFM SERIES 2 TEST 10 RUN 1104 DONE ON 30972 1225

DESCRIPTION	TEMP DEG F	STD DEV	RISE AB INLET T	NORMALIZED TEMP
TC DOB04 DUCT B	613.0	0.377	0.04	0.005
TC DOE04 DUCT E	613.2	0.278	0.22	0.026
TC DOF04 DUCT F	613.3	0.390	0.32	0.039
TC DOB08 DUCT B	613.4	0.294	0.38	0.046
TC DOD08 DUCT D	619.2	0.250	6.21	0.748
TC DOF08 DUCT F	613.1	0.250	0.14	0.017
TC DOB12 DUCT B	614.1	0.174	1.15	0.139
TC DOE12 DUCT E	613.1	0.376	0.16	0.019
TC DOF12 DUCT F	613.3	0.427	0.29	0.035
TC DOB16 DUCT B	614.0	0.377	0.99	0.119
TC DOD16 DUCT D	615.2	0.250	2.21	0.266
TC DOF16 DUCT F	613.4	0.248	0.40	0.048
TC DOD18 DUCT D	617.8	0.381	4.77	0.575
TC DOE18 DUCT E	613.9	0.250	0.91	0.110
TC DAB18 DUCT AB	613.9	0.278	0.89	0.107
TC DDE18 DUCT DE	614.7	0.248	1.70	0.205
TC DEF18 DUCT EF	613.0	0.509	0.06	0.007
TC DOF18 DUCT F	613.1	0.320	0.12	0.014
TC DFA18 DUCT FA	613.5	0.275	0.57	0.069
TC DOB21 DUCT B	626.2	0.363	13.21	1.591
TC DOD21 DUCT D	630.0	0.275	17.07	2.056
TC DOF21 DUCT F	613.8	0.196	0.79	0.095
TC DOB23 DUCT B	622.4	0.299	9.42	1.135
TC DOD23 DUCT D	632.3	0.348	19.31	2.326
TC DOF23 DUCT F	614.0	0.405	1.04	0.125

RESULTS FOR THERMOCOUPLES IN CHANNEL EXITS
FFM SERIES 2 TEST 10 RUN 1104 DONE ON 30972 1225

DESCRIPTION	TEMP DEG F	STD DEV	RISE AB INLET T	NORMALIZED TEMP
TC EC03 EXIT CH 3	615.3	0.299	2.28	0.275
TC EC16 EXIT CH 16	615.4	0.553	2.46	0.296
TC EC17 EXIT CH 17	614.5	0.275	1.55	0.187
TC EC34 EXIT CH 34	615.3	0.299	2.37	0.285
TC EC35 EXIT CH 35	614.8	0.363	1.84	0.222
TC EC36 EXIT CH 36	616.8	0.386	3.77	0.454
TC EC06 EXIT CH 6	614.8	0.405	1.81	0.218
TC EC08 EXIT CH 8	619.9	0.429	6.95	0.837
TC EC27 EXIT CH 27	624.6	0.569	11.59	1.396
TC EA36 EXIT ANN EF	615.8	0.496	2.80	0.337
TC EA27 EXIT ANN BC	623.9	0.354	10.97	1.321
TC EA28 EXIT ANN C	622.8	0.397	9.84	1.185

RESULTS FOR THERMOCOUPLES INSIDE HEATERS
FFM SERIES 2 TEST 10 RUN 1104 DONE ON 30972 1225

DESCRIPTION	TEMP DEG F	STD DEV	RISE AB INLET T	NORMALIZED TEMP
TC R0118AB HTR 1 INT	613.8	0.297	0.79	0.095
TC R0219AB HTR 2 INT	614.2	0.307	1.18	0.142
TC R0418AB HTR 4 INT	625.9	0.489	12.93	1.557
TC R0518AB HTR 5 INT	616.9	0.507	3.97	0.478
TC R1019AB HEATER 10	630.7	0.418	17.68	2.130
TC R1218AB HEATER 12	614.3	0.185	1.32	0.159
TC R1318DE HEATER 13	614.7	0.386	1.73	0.208
TC R1418AB HEATER 14	613.5	0.299	0.53	0.064
TC R1518AB HEATER 15	613.7	0.307	0.70	0.084
TC R1618AB HEATER 16	613.9	0.386	0.95	0.114
TC R1718AB HEATER 17	613.5	0.298	0.49	0.059
TC R1817AB HEATER 18	613.9	0.307	0.93	0.112
TC R0118BC HEATER 1	615.8	0.429	2.77	0.334
TC R0118CD HEATER 1	615.6	0.397	2.67	0.322
TC R0118DE HEATER 1	620.0	0.354	7.05	0.849
TC R0219BC HEATER 2	613.2	0.397	0.19	0.023
TC R0418BC HEATER 4	623.0	0.431	10.00	1.205
TC R0418CD HEATER 4	622.5	0.413	9.54	1.149
TC R0418DE HEATER 4	618.6	0.536	5.62	0.677
TC R0518BC HEATER 5	616.4	0.278	3.44	0.414
TC R0518CD HEATER 5	614.6	0.354	1.67	0.201
TC R0718BC HEATER 7	612.7	0.277	-0.25	-0.030
TC R0718CD HEATER 7	612.9	0.318	-0.11	-0.013
TC R0718DE HEATER 7	612.7	0.524	-0.24	-0.029
TC R0818BC HEATER 8	617.0	0.429	4.07	0.490
TC R1019BC HEATER 10	635.2	0.429	22.22	2.676
TC R1718BC HEATER 17	613.0	0.318	0.07	0.008
TC R1918DE HEATER 19	613.7	0.297	0.69	0.083

OPERATING DATA FOR FFM SERIES 2 TEST 10 RUN 1204
WHICH WAS DONE ON 30972 1255

DESCRIPTION	MEAN VALUE	STANDARD DEVIATION
HEATER 1 POWER KW	-0.03	0.0
HEATER 8,18,19 POWER	-0.01	0.018
HTR 12,13,14 POWER	17.30	0.018
HTR 2,7,9,17 POWER	-0.04	0.0
HTR 4,5,11,15 POWER	-0.08	0.0
HTR 3,6,10,16 POWER	-0.14	0.022
TOTAL POWER	15.86	0.103
TEST SECT FLOW, GPM	54.32	0.037
TEST SECT INLET PR	34.37	0.069
TEST SECT OUTLET PR	8.74	0.042
TOTAL FLOW, GPM	113.12	1.134
PUMP OUTLET PR, PSI	35.97	0.060
PUMP SPEED, RPM	1504.40	0.548
BLOWER SPEED, RPM	43.25	0.699
AIR FLOW (200 F) CFM	1.00	0.009
TC 313 TEST SECT IN	604.06	0.383
TC 317 TEST SECT OUT	611.97	0.362
TC 300 PUMP OUTLET	603.86	0.456
TC 318 RADIATOR IN	612.00	0.459
TC 334 RADIATOR OUT	604.06	0.285
TC 336 PUMP INLET	603.83	0.294
TC 332 RAD AIR IN	303.20	2.662
TC 331 RAD AIR OUT	371.58	9.192

HEAT BALANCE ON SODIUM FLOWING THROUGH BUNDLE
HEAT SUPPLIED BY DUMMY FUEL RODS = 59079.46 BTU/HR
HEAT ADDED TO SODIUM = 57960.25 BTU/HR
PERCENT HEAT BALANCE = 98.11

RESULTS FOR UNGROUNDED JUNCTION THERMOCOUPLES
FFM SERIES 2 TEST 10 RUN 1204 DONE ON 30972 1255

DESCRIPTION	TEMP DEG F	STD DEV	RISE AB INLET T	NORMALIZED TEMP
TC 1504U CH 37	603.7	0.285	-0.39	-0.048
TC 1706U CH 21	604.0	0.311	-0.03	-0.004
TC 1807U CH 24	604.1	0.500	0.03	0.004
TC 1108U CH 31	618.7	0.332	14.65	1.817
TC 0409U CH 13	610.3	0.563	6.19	0.768
TC 0509U CH 3	604.0	0.332	-0.05	-0.006
TC 1009U CH 29	610.5	0.479	6.46	0.801
TC 1409U CH 17	604.1	0.427	0.04	0.005
TC 1609U CH 21	604.1	0.320	0.04	0.005
TC 1914U CH 24	604.3	0.500	0.28	0.035
TC 0815U CH 8	604.4	0.361	0.34	0.042
TC 1316U CH 35	606.3	0.221	2.19	0.272
TC 1516U CH 37	603.9	0.512	-0.19	-0.024
TC 0817U CH 9	604.8	0.342	0.77	0.096
TC 1217U CH 33	643.8	0.233	39.72	4.926
TC 1318U CH 34	605.3	0.586	1.20	0.149
TC 1718U CH 22	604.1	0.435	0.04	0.005
TC 1219U CH 32	649.8	0.826	45.75	5.674
TC 1819U CH 24	603.9	0.823	-0.12	-0.015
TC 1 20U CH 31	632.2	0.975	28.18	3.495
TC 0421U CH 13	623.6	0.814	19.52	2.421
TC 0521U CH 3	607.6	0.915	3.54	0.439
TC 1021U CH 29	623.4	0.811	19.38	2.404
TC 1421U CH 17	607.1	0.741	3.03	0.376
TC 1621U CH 21	603.6	0.897	-0.47	-0.058

RESULTS FOR GROUNDED JUNCTION THERMOCOUPLES
FFM SERIES 2 TEST 10 RUN 1204 DONE ON 30972 1255

DESCRIPTION	TEMP DEG F	STD DEV	RISE AB INLET T	NORMALIZED TEMP
TC 0118C CH 3	605.6	0.897	1.50	0.186
TC 0618D CH 4	603.6	0.826	-0.43	-0.053
TC 0618C CH 19	603.8	0.908	-0.27	-0.033
TC 0219A HEATER 2	604.1	0.823	0.08	0.010
TC 0219B CH 10	604.4	0.802	0.36	0.045
TC 0919A HTR 9 EXT	610.1	0.814	6.04	0.749
TC 0919B CH 29	614.0	0.728	9.93	1.232
TC 0718C CH 5	603.1	0.646	-0.98	-0.122
TC 0718D CH 6	603.2	0.978	-0.86	-0.107
TC 0319A HEATER 3	613.5	0.897	9.42	1.168
TC 0319B CH 12	614.2	0.628	10.11	1.254

RESULTS FOR DUCT WALL THERMOCOUPLES
FFM SERIES 2 TEST 10 RUN 1204 DONE ON 30972 1255

DESCRIPTION	TEMP DEG F	STD DEV	RISE AB INLET T	NORMALIZED TEMP
TC D0B04 DUCT B	603.8	0.479	-0.26	-0.032
TC D0E04 DUCT E	604.0	0.320	-0.09	-0.011
TC D0F04 DUCT F	604.1	0.361	0.01	0.001
TC D0B08 DUCT B	604.0	0.408	-0.03	-0.004
TC D0D08 DUCT D	614.7	0.541	10.62	1.317
TC D0F08 DUCT F	603.8	0.332	-0.27	-0.033
TC D0B12 DUCT B	604.4	0.479	0.36	0.045
TC D0E12 DUCT E	606.9	0.342	2.82	0.350
TC D0F12 DUCT F	604.1	0.456	0.02	0.002
TC D0B16 DUCT B	604.7	0.342	0.65	0.081
TC D0D16 DUCT D	615.0	0.524	10.90	1.352
TC D0F16 DUCT F	604.2	0.221	0.16	0.020
TC D0D18 DUCT D	615.5	0.479	11.44	1.419
TC D0E18 DUCT E	606.3	0.332	2.29	0.284
TC DAB18 DUCT AB	604.6	0.297	0.50	0.062
TC DDE18 DUCT DE	609.8	0.411	5.74	0.712
TC DEF18 DUCT EF	605.4	0.355	1.38	0.171
TC D0F18 DUCT F	604.3	0.294	0.20	0.025
TC DFA18 DUCT FA	603.9	0.479	-0.16	-0.020
TC D0B21 DUCT B	613.1	0.708	9.00	1.116
TC D0D21 DUCT D	621.1	0.666	17.07	2.117
TC D0F21 DUCT F	603.6	0.666	-0.43	-0.053
TC D0B23 DUCT B	612.3	0.608	8.25	1.023
TC D0D23 DUCT D	625.1	0.807	21.06	2.612
TC D0F23 DUCT F	603.8	0.666	-0.23	-0.029

RESULTS FOR THERMOCOUPLES IN CHANNEL EXITS
FFM SERIES 2 TEST 10 RUN 1204 DONE ON 30972 1255

DESCRIPTION	TEMP DEG F	STD DEV	RISE AB INLET T	NORMALIZED TEMP
TC EC03 EXIT CH 3	607.6	0.897	3.53	0.438
TC EC16 EXIT CH 16	608.3	0.708	4.23	0.525
TC EC17 EXIT CH 17	605.2	0.716	1.14	0.141
TC EC34 EXIT CH 34	606.6	0.900	2.52	0.313
TC EC35 EXIT CH 35	605.1	0.897	1.03	0.128
TC EC36 EXIT CH 36	604.9	0.686	0.87	0.108
TC EC06 EXIT CH 6	604.5	1.028	0.48	0.060
TC EC08 EXIT CH 8	608.8	0.480	4.69	0.582
TC EC27 EXIT CH 27	617.4	0.525	13.36	1.657
TC EA36 EXIT ANN EF	606.3	0.388	2.22	0.275
TC EA27 EXIT ANN BC	616.3	0.585	12.19	1.512
TC EA28 EXIT ANN C	615.9	0.355	11.88	1.473

RESULTS FOR THERMOCOUPLES INSIDE HEATERS
FFM SERIES 2 TEST 10 RUN 1204 DONE ON 30972 1255

DESCRIPTION	TEMP DEG F	STD DEV	RISE AB INLET T	NORMALIZED TEMP
TC R0118AB HTR 1 INT	604.0	0.408	-0.03	-0.004
TC R0219AB HTR 2 INT	603.5	0.711	-0.51	-0.063
TC R0418AB HTR 4 INT	609.7	0.666	5.65	0.701
TC R0518AB HTR 5 INT	606.6	0.718	2.55	0.316
TC R1019AB HEATER 10	609.3	0.608	5.19	0.644
TC R1218AB HEATER 12	769.1	0.557	165.01	20.465
TC R1318DE HEATER 13	608.8	0.666	4.77	0.592
TC R1418AB HEATER 14	604.2	0.708	0.10	0.012
TC R1518AB HEATER 15	603.5	0.708	-0.57	-0.071
TC R1618AB HEATER 16	603.3	0.900	-0.71	-0.088
TC R1718AB HEATER 17	603.3	0.934	-0.80	-0.099
TC R1817AB HEATER 18	603.3	0.822	-0.78	-0.097
TC R0118BC HEATER 1	605.0	0.495	0.94	0.117
TC R0118CD HEATER 1	605.3	0.594	1.22	0.151
TC R0118DE HEATER 1	606.7	0.594	2.62	0.325
TC R0219BC HEATER 2	603.7	0.545	-0.33	-0.041
TC R0418BC HEATER 4	609.7	0.439	5.65	0.701
TC R0418CD HEATER 4	609.6	0.605	5.57	0.691
TC R0418DE HEATER 4	612.6	0.367	8.50	1.054
TC R0518BC HEATER 5	606.2	0.525	2.11	0.262
TC R0518CD HEATER 5	604.8	0.522	0.76	0.094
TC R0718BC HEATER 7	603.7	0.388	-0.38	-0.047
TC R0718CD HEATER 7	603.8	0.578	-0.24	-0.030
TC R0718DE HEATER 7	603.7	0.439	-0.40	-0.050
TC R0818BC HEATER 8	606.8	0.460	2.69	0.334
TC R1019BC HEATER 10	611.1	0.359	7.06	0.876
TC R1718BC HEATER 17	604.0	0.495	-0.06	-0.007
TC R1918DE HEATER 19	604.4	0.404	0.30	0.037

OPERATING DATA FOR FFM SERIES 2 TEST 10 RUN 1304
WHICH WAS DONE ON 30972 1324

DESCRIPTION	MEAN VALUE	STANDARD DEVIATION
HEATER 1 POWER KW	-0.04	0.005
HEATER 8,18,19 POWER	-0.01	0.018
HTR 12,13,14 POWER	17.89	0.022
HTR 2,7,9,17 POWER	-0.05	0.018
HTR 4,5,11,15 POWER	-0.08	0.0
HTR 3,6,10,16 POWER	-0.13	0.018
TOTAL POWER	16.52	0.0
TEST SECT FLOW, GPM	54.26	0.064
TEST SECT INLET PR	34.25	0.032
TEST SECT OUTLET PR	8.75	0.044
TOTAL FLOW, GPM	113.22	0.944
PUMP OUTLET PR, PSI	35.96	0.079
PUMP SPEED, RPM	1503.20	0.837
BLOWER SPEED, RPM	52.22	1.133
AIR FLOW (200 F) CFM	0.99	0.009
TC 313 TEST SECT IN	597.62	0.514
TC 317 TEST SECT OUT	605.94	0.514
TC 300 PUMP OUTLET	597.79	0.743
TC 318 RADIATOR IN	606.37	0.599
TC 334 RADIATOR OUT	597.62	0.620
TC 336 PUMP INLET	597.85	0.732
TC 332 RAD AIR IN	297.11	0.943
TC 331 RAD AIR OUT	350.02	11.481

HEAT BALANCE ON SODIUM FLOWING THROUGH BUNDLE
HEAT SUPPLIED BY DUMMY FUEL RODS = 61094.35 BTU/HR
HEAT ADDED TO SODIUM = 61001.28 BTU/HR
PERCENT HEAT BALANCE = 99.85

RESULTS FOR UNGROUNDED JUNCTION THERMOCOUPLES
FFM SERIES 2 TEST 10 RUN 1304 DONE ON 30972 1324

DESCRIPTION	TEMP DEG F	STD DEV	RISE AB INLET T	NORMALIZED TEMP
TC 1504U CH 37	597.6	0.886	-0.04	-0.005
TC 1706U CH 21	597.9	0.470	0.32	0.038
TC 1807U CH 24	597.6	0.714	0.03	0.004
TC 1108U CH 31	601.5	0.474	3.85	0.462
TC 0409U CH 13	602.4	0.520	4.83	0.580
TC 0509U CH 3	604.5	0.520	6.88	0.826
TC 1009U CH 29	601.0	0.745	3.40	0.408
TC 1409U CH 17	621.8	0.909	24.23	2.908
TC 1609U CH 21	598.0	0.771	0.37	0.044
TC 1914U CH 24	597.8	0.618	0.20	0.024
TC 0815U CH 8	597.4	0.683	-0.17	-0.020
TC 1316U CH 35	658.0	0.520	60.36	7.244
TC 1516U CH 37	597.8	0.632	0.16	0.019
TC 0817U CH 9	597.9	0.599	0.30	0.036
TC 1217U CH 33	623.1	0.605	25.46	3.055
TC 1318U CH 34	629.1	0.691	31.48	3.778
TC 1718U CH 22	598.1	0.674	0.53	0.064
TC 1219U CH 32	620.0	0.477	22.35	2.682
TC 1819U CH 24	598.2	0.718	0.56	0.067
TC 1120U CH 31	610.4	0.758	12.75	1.530
TC 0421U CH 13	614.3	0.605	16.72	2.007
TC 0521U CH 3	623.3	0.649	25.69	3.083
TC 1021U CH 29	607.8	0.511	10.23	1.228
TC 1421U CH 17	630.7	0.602	33.04	3.965
TC 1621U CH 21	598.3	0.734	0.66	0.079

RESULTS FOR GROUNDED JUNCTION THERMOCOUPLES
FFM SERIES 2 TEST 10 RUN 1304 DONE ON 30972 1324

DESCRIPTION	TEMP DEG F	STD DEV	RISE AB INLET T	NORMALIZED TEMP
TC 0118C CH 3	608.0	0.750	10.43	1.252
TC 0618D CH 4	602.2	0.750	4.58	0.550
TC 0618C CH 19	599.9	0.598	2.25	0.270
TC 0219A HEATER 2	598.4	0.543	0.74	0.089
TC 0219B CH 10	598.6	0.649	1.02	0.122
TC 0919A HTR 9 EXT	600.0	0.718	2.39	0.287
TC 0919B CH 29	600.9	0.511	3.26	0.391
TC 0718C CH 5	598.2	0.758	0.54	0.065
TC 0718D CH 6	598.2	0.391	0.62	0.074
TC 0319A HEATER 5	602.5	0.583	4.84	0.581
TC 0319B CH 12	602.4	0.734	4.76	0.571

RESULTS FOR DUCT WALL THERMOCOUPLES
FFM SERIES 2 TEST 10 RUN 1304 DONE ON 30972 1324

DESCRIPTION	TEMP DEG F	STD DEV	RISE AB INLET T	NORMALIZED TEMP
TC D0B04 DUCT B	597.7	0.683	0.05	0.006
TC D0E04 DUCT E	598.8	0.697	1.16	0.139
TC D0F04 DUCT F	597.6	0.527	0.0	0.0
TC D0B08 DUCT B	597.5	0.472	-0.07	-0.008
TC D0D08 DUCT D	601.7	0.549	4.04	0.485
TC D0F08 DUCT F	597.8	0.531	0.23	0.028
TC D0B12 DUCT B	597.9	0.632	0.26	0.031
TC D0E12 DUCT E	603.9	0.691	6.28	0.754
TC D0F12 DUCT F	598.0	0.336	0.36	0.043
TC D0B16 DUCT B	597.8	0.732	0.21	0.025
TC D0D16 DUCT D	607.2	0.472	9.58	1.150
TC D0F16 DUCT F	597.8	0.608	0.17	0.020
TC D0D18 DUCT D	605.5	0.442	7.93	0.952
TC D0E18 DUCT E	608.5	0.683	10.88	1.306
TC DAB18 DUCT AB	598.1	0.469	0.49	0.059
TC DDE18 DUCT DE	608.5	0.691	10.86	1.303
TC DEF18 DUCT EF	599.9	0.697	2.28	0.274
TC D0F18 DUCT F	598.3	0.359	0.63	0.076
TC DFA18 DUCT FA	597.8	0.714	0.15	0.018
TC D0B21 DUCT B	601.3	0.511	3.63	0.436
TC D0D21 DUCT D	608.0	0.543	10.36	1.243
TC D0F21 DUCT F	598.3	0.483	0.68	0.082
TC D0B23 DUCT B	601.8	0.506	4.18	0.502
TC D0D23 DUCT D	609.8	0.685	12.15	1.458
TC D0F23 DUCT F	598.1	0.556	0.52	0.062

RESULTS FOR THERMOCOUPLES IN CHANNEL EXITS
FFM SERIES 2 TEST 10 RUN 1304 DONE ON 30972 1324

DESCRIPTION	TEMP DEG F	STD DEV	RISE AB INLET T	NORMALIZED TEMP
TC EC03 EXIT CH 3	620.0	0.543	22.36	2.683
TC EC16 EXIT CH 16	616.8	0.685	19.18	2.302
TC EC17 EXIT CH 17	600.6	0.584	3.01	0.361
TC EC34 EXIT CH 34	614.6	0.845	16.99	2.039
TC EC35 EXIT CH 35	600.7	0.645	3.04	0.365
TC EC36 EXIT CH 36	600.9	0.511	3.26	0.391
TC EC06 EXIT CH 6	599.2	0.602	1.61	0.193
TC EC08 EXIT CH 8	601.3	0.667	3.66	0.439
TC EC27 EXIT CH 27	608.6	0.328	10.98	1.318
TC EA36 EXIT ANN EF	601.0	0.602	3.40	0.408
TC EA27 EXIT ANN BC	607.5	0.602	9.90	1.188
TC EA28 EXIT ANN C	609.9	0.602	12.26	1.471

RESULTS FOR THERMOCOUPLES INSIDE HEATERS
FFM SERIES 2 TEST 10 RUN 1304 DONE ON 30972 1324

DESCRIPTION	TEMP DEG F	STD DEV	RISE AB INLET T	NORMALIZED TEMP
TC R0118AB HTR 1 INT	603.2	0.875	5.60	0.672
TC R0219AB HTR 2 INT	598.2	0.704	0.56	0.067
TC R0418AB HTR 4 INT	608.3	0.511	10.63	1.276
TC R0518AB HTR 5 INT	617.0	0.598	19.37	2.325
TC R1019AB HEATER 10	600.0	0.491	2.36	0.283
TC R1218AB HEATER 12	617.6	0.175	20.02	2.403
TC R1318DE HEATER 13	833.0	0.723	235.38	28.248
TC R1418AB HEATER 14	602.8	0.511	5.13	0.616
TC R1518AB HEATER 15	598.6	0.511	0.96	0.115
TC R1618AB HEATER 16	597.9	0.491	0.29	0.035
TC R1718AB HEATER 17	597.9	0.511	0.33	0.040
TC R1817AB HEATER 18	597.9	0.718	0.31	0.037
TC R0118BC HEATER 1	605.3	0.545	7.71	0.925
TC R0118CD HEATER 1	605.2	0.463	7.60	0.912
TC R0118DE HEATER 1	604.0	0.545	6.38	0.766
TC R0219BC HEATER 2	597.1	0.602	-0.50	-0.060
TC R0418BC HEATER 4	609.2	0.620	11.60	1.392
TC R0418CD HEATER 4	609.5	0.405	11.91	1.429
TC R0418DE HEATER 4	620.3	0.421	22.72	2.727
TC R0518BC HEATER 5	615.1	0.602	17.51	2.101
TC R0518CD HEATER 5	608.6	0.602	11.01	1.321
TC R0718BC HEATER 7	597.2	0.239	-0.45	-0.054
TC R0718CD HEATER 7	597.3	0.602	-0.37	-0.044
TC R0718DE HEATER 7	597.1	0.448	-0.47	-0.056
TC R0818BC HEATER 8	598.4	0.352	0.74	0.089
TC R1019BC HEATER 10	599.3	0.380	1.72	0.206
TC R1718BC HEATER 17	597.4	0.435	-0.20	-0.024
TC R1918DE HEATER 19	597.4	0.336	-0.19	-0.023

OPERATING DATA FOR FFM SERIES 2 TEST 1C RUN 1404
WHICH WAS DONE ON 30972 1351

DESCRIPTION	MEAN VALUE	STANDARD DEVIATION
HEATER 1 POWER KW	-0.03	0.005
HEATER 8,18,19 POWER	0.0	0.0
HTR 12,13,14 POWER	17.97	0.022
HTR 2,7,9,17 POWER	-0.04	0.0
HTR 4,5,11,15 POWER	-0.09	0.018
HTR 3,6,10,16 POWER	-0.14	0.022
TOTAL POWER	16.57	0.107
TEST SECT FLOW, GPM	54.30	0.056
TEST SECT INLET PR	34.31	0.123
TEST SECT OUTLET PR	8.75	0.046
TOTAL FLOW, GPM	113.12	1.985
PUMP OUTLET PR, PSI	35.93	0.080
PUMP SPEED, RPM	1504.00	0.707
BLOWER SPEED, RPM	48.71	0.944
AIR FLOW (200 F) CFM	0.99	0.0
TC 313 TEST SECT IN	606.27	0.763
TC 317 TEST SECT OUT	614.60	0.670
TC 300 PUMP OUTLET	605.64	0.522
TC 318 RADIATOR IN	614.21	0.529
TC 334 RADIATOR OUT	605.59	0.607
TC 336 PUMP INLET	605.71	0.547
TC 332 RAD AIR IN	298.28	2.073
TC 331 RAD AIR OUT	378.58	8.382

HEAT BALANCE ON SODIUM FLOWING THROUGH BUNDLE
HEAT SUPPLIED BY DUMMY FUEL RODS = 61367.50 BTU/HR
HEAT ADDED TO SODIUM = 60975.88 BTU/HR
PERCENT HEAT BALANCE = 99.36

RESULTS FOR UNGROUNDED JUNCTION THERMOCOUPLES
FFM SERIES 2 TEST 10 RUN 1404 DONE ON 30972 1351

DESCRIPTION	TEMP DEG F	STD DEV	RISE AB INLET T	NORMALIZED TEMP
TC 1504U CH 37	606.6	0.828	0.38	0.045
TC 1706U CH 21	605.8	0.512	-0.45	-0.054
TC 1807U CH 24	606.0	0.697	-0.31	-0.037
TC 1108U CH 31	607.1	0.559	0.87	0.104
TC 0409U CH 13	606.4	0.878	0.11	0.013
TC 0509U CH 3	611.5	0.697	5.19	0.619
TC 1009U CH 29	606.6	0.814	0.35	0.042
TC 1409U CH 17	669.2	0.637	62.93	7.506
TC 1609U CH 21	605.8	0.637	-0.42	-0.050
TC 1914U CH 24	605.7	0.607	-0.55	-0.066
TC 0815U CH 8	605.7	0.559	-0.53	-0.063
TC 1316U CH 35	631.7	0.736	25.43	3.033
TC 1516U CH 37	607.8	0.967	1.57	0.187
TC 0817U CH 9	605.7	0.559	-0.53	-0.063
TC 1217U CH 33	626.6	0.559	20.32	2.424
TC 1318U CH 34	635.1	0.763	28.80	3.435
TC 1718U CH 22	606.0	0.559	-0.30	-0.036
TC 1219U CH 32	627.5	0.693	21.26	2.536
TC 1819U CH 24	605.5	0.671	-0.80	-0.095
TC 1120U CH 31	617.9	0.961	11.68	1.393
TC 0421U CH 13	609.1	0.602	2.88	0.344
TC 0521U CH 3	620.6	0.673	14.35	1.712
TC 1021U CH 29	618.8	0.749	12.56	1.498
TC 1421U CH 17	685.9	0.677	79.66	9.502
TC 1621U CH 21	605.9	0.693	-0.34	-0.041

RESULTS FOR GROUNDED JUNCTION THERMOCOUPLES
FFM SERIES 2 TEST 10 RUN 1404 DONE ON 30972 1351

DESCRIPTION	TEMP DEG F	STD DEV	RISE AB INLET T	NORMALIZED TEMP
TC 0118C CH 3	610.9	0.866	4.65	0.555
TC 0618D CH 4	611.1	0.694	4.87	0.581
TC 0618C CH 19	610.9	0.677	4.61	0.550
TC 0219A HEATER 2	605.7	0.818	-0.60	-0.072
TC 0219B CH 10	605.9	0.905	-0.34	-0.041
TC 0919A HTR 9 EXT	606.3	0.781	0.08	0.010
TC 0919B CH 29	606.8	0.865	0.51	0.061
TC 0718C CH 5	605.7	0.727	-0.53	-0.063
TC 0718D CH 6	606.4	0.857	0.09	0.011
TC 0319A HEATER 3	606.7	0.701	0.45	0.054
TC 0319B CH 12	606.6	0.700	0.30	0.036

RESULTS FOR DUCT WALL THERMOCOUPLES
FFM SERIES 2 TEST 10 RUN 1404 DONE ON 30972 1351

DESCRIPTION	TEMP DEG F	STD DEV	RISE AB INLET T	NORMALIZED TEMP
TC D0B04 DUCT B	606.3	0.699	0.06	0.007
TC D0E04 DUCT E	611.8	0.699	5.48	0.654
TC D0F04 DUCT F	606.7	0.699	0.41	0.049
TC D0B08 DUCT B	606.2	0.699	-0.07	-0.008
TC D0D08 DUCT D	607.8	0.763	1.50	0.179
TC D0F08 DUCT F	608.9	0.632	2.67	0.318
TC D0B12 DUCT B	606.5	0.779	0.24	0.029
TC D0E12 DUCT E	625.9	0.844	19.59	2.337
TC D0F12 DUCT F	607.6	0.801	1.34	0.160
TC D0B16 DUCT B	606.0	0.655	-0.27	-0.032
TC D0D16 DUCT D	621.1	0.763	14.80	1.765
TC D0F16 DUCT F	608.4	0.549	2.17	0.259
TC D0D18 DUCT D	618.5	0.900	12.20	1.455
TC D0E18 DUCT E	624.0	0.699	17.78	2.121
TC DAB18 DUCT AB	606.3	0.763	0.08	0.010
TC DDE18 DUCT DE	618.4	0.699	12.18	1.453
TC DEF18 DUCT EF	621.8	0.632	15.57	1.857
TC D0F18 DUCT F	609.4	0.423	3.14	0.375
TC DFA18 DUCT FA	606.9	0.924	0.59	0.070
TC D0B21 DUCT B	607.0	0.727	0.77	0.092
TC D0D21 DUCT D	616.0	0.852	9.76	1.164
TC D0F21 DUCT F	608.9	0.727	2.60	0.310
TC D0B23 DUCT B	607.6	0.916	1.34	0.160
TC D0D23 DUCT D	616.1	0.822	9.88	1.179
TC D0F23 DUCT F	607.4	0.749	1.09	0.130

RESULTS FOR THERMOCOUPLES IN CHANNEL EXITS
FFM SERIES 2 TEST 10 RUN 1404 DONE ON 30972 1351

DESCRIPTION	TEMP DEG F	STD DEV	RISE AB INLET T	NORMALIZED TEMP
TC EC03 EXIT CH 3	628.9	0.579	22.64	2.701
TC EC16 EXIT CH 16	629.6	0.705	23.38	2.789
TC EC17 EXIT CH 17	639.8	1.086	33.53	3.999
TC EC34 EXIT CH 34	620.0	0.807	13.76	1.641
TC EC35 EXIT CH 35	611.0	0.671	4.72	0.563
TC EC36 EXIT CH 36	614.2	1.077	7.90	0.942
TC EC06 EXIT CH 6	606.5	0.830	0.23	0.027
TC EC08 EXIT CH 8	608.6	0.673	2.36	0.282
TC EC27 EXIT CH 27	616.4	0.896	10.10	1.205
TC EA36 EXIT ANN EF	618.2	1.055	11.94	1.424
TC EA27 EXIT ANN BC	615.2	0.889	8.92	1.064
TC EA28 EXIT ANN C	617.6	1.114	11.31	1.349

RESULTS FOR THERMOCOUPLES INSIDE HEATERS
FFM SERIES 2 TEST 10 RUN 1404 DONE ON 30972 1351

DESCRIPTION	TEMP DEG F	STD DEV	RISE AB INLET T	NORMALIZED TEMP
TC R0118AB HTR 1 INT	609.2	0.833	2.96	0.353
TC R0219AB HTR 2 INT	605.8	0.677	-0.47	-0.056
TC R0418AB HTR 4 INT	609.8	0.677	3.53	0.421
TC R0518AB HTR 5 INT	615.5	0.830	9.23	1.101
TC R1019AB HEATER 10	606.8	0.749	0.49	0.058
TC R1218AB HEATER 12	623.0	1.041	16.70	1.992
TC R1318DE HEATER 13	631.9	0.593	25.60	3.054
TC R1418AB HEATER 14	827.9	0.919	221.67	26.441
TC R1518AB HEATER 15	612.3	0.701	6.05	0.722
TC R1618AB HEATER 16	605.5	0.649	-0.74	-0.088
TC R1718AB HEATER 17	605.6	0.693	-0.66	-0.079
TC R1817AB HEATER 18	605.5	0.677	-0.72	-0.086
TC R0118BC HEATER 1	610.9	0.755	4.66	0.556
TC R0118CD HEATER 1	610.8	0.740	4.51	0.538
TC R0118DE HEATER 1	609.1	0.697	2.88	0.344
TC R0219BC HEATER 2	606.2	0.932	-0.09	-0.011
TC R0418BC HEATER 4	611.3	0.722	5.06	0.604
TC R0418CD HEATER 4	611.7	0.750	5.45	0.650
TC R0418DE HEATER 4	615.5	0.923	9.23	1.101
TC R0518BC HEATER 5	615.5	0.709	9.25	1.103
TC R0518CD HEATER 5	613.3	0.740	7.04	0.840
TC R0718BC HEATER 7	606.2	0.745	-0.11	-0.013
TC R0718CD HEATER 7	605.9	0.596	-0.40	-0.048
TC R0718DE HEATER 7	606.1	0.557	-0.13	-0.015
TC R0818BC HEATER 8	606.2	0.726	-0.11	-0.013
TC R1019BC HEATER 10	606.7	0.614	0.40	0.048
TC R1718BC HEATER 17	606.5	0.673	0.19	0.023
TC R1918DE HEATER 19	605.8	0.697	-0.51	-0.061

OPERATING DATA FOR FFM SERIES 2 TEST 10 RUN 1504
WHICH WAS DONE ON 30972 1414

DESCRIPTION	MEAN VALUE	STANDARD DEVIATION
HEATER 1 POWER KW	-0.03	0.0
HEATER 8,18,19 POWER	0.0	0.0
HTR 12,13,14 POWER	-0.10	0.022
HTR 2,7,9,17 POWER	-0.03	0.018
HTR 4,5,11,15 POWER	17.94	0.022
HTR 3,6,10,16 POWER	-0.14	0.022
TOTAL POWER	16.57	0.107
TEST SECT FLOW, GPM	54.31	0.124
TEST SECT INLET PR	34.36	0.062
TEST SECT OUTLET PR	8.77	0.061
TOTAL FLOW, GPM	112.98	1.501
PUMP OUTLET PR, PSI	35.87	0.042
PUMP SPEED, RPM	1504.20	0.837
BLOWER SPEED, RPM	55.49	0.986
AIR FLOW (200 F) CFM	0.99	0.004
TC 313 TEST SECT IN	608.24	0.285
TC 317 TEST SECT OUT	616.60	0.132
TC 300 PUMP OUTLET	608.03	0.256
TC 318 RADIATOR IN	616.52	0.697
TC 334 RADIATOR OUT	607.90	0.552
TC 336 PUMP INLET	608.09	0.277
TC 332 RAD AIR IN	301.19	0.681
TC 331 RAD AIR OUT	381.15	16.190

HEAT BALANCE ON SODIUM FLOWING THROUGH BUNDLE
HEAT SUPPLIED BY DUMMY FUEL RODS = 61265.05 BTU/HR
HEAT ADDED TO SODIUM = 61168.40 BTU/HR
PERCENT HEAT BALANCE = 99.84

RESULTS FOR UNGROUNDED JUNCTION THERMOCOUPLES
FFM SERIES 2 TEST 10 RUN 1504 DONE ON 30972 1414

DESCRIPTION	TEMP DEG F	STD DEV	RISE AB INLET T	NORMALIZED TEMP
TC 1504U CH 37	642.4	0.132	34.14	4.077
TC 1706U CH 21	608.2	0.132	-0.02	-0.002
TC 1807U CH 24	608.3	0.287	0.11	0.013
TC 1108U CH 31	608.3	0.287	0.01	0.001
TC 0409U CH 13	608.3	0.222	0.10	0.012
TC 0509U CH 3	610.8	0.256	2.53	0.302
TC 1009U CH 29	608.1	0.256	-0.12	-0.014
TC 1409U CH 17	611.3	0.132	3.11	0.371
TC 1609U CH 21	615.6	0.222	7.32	0.874
TC 1914U CH 24	608.1	0.132	-0.12	-0.014
TC 0815U CH 8	608.1	0.287	-0.09	-0.011
TC 1316U CH 35	617.7	0.287	9.49	1.133
TC 1516U CH 37	662.7	0.132	54.48	6.507
TC 0817U CH 9	608.1	0.287	-0.09	-0.011
TC 1 17U CH 33	617.3	0.132	9.09	1.086
TC 1318U CH 34	618.5	0.242	10.28	1.228
TC 1718U CH 22	610.9	0.224	2.70	0.322
TC 1219U CH 32	617.9	0.336	9.66	1.154
TC 1819U CH 24	607.9	0.336	-0.36	-0.043
TC 1120U CH 31	614.3	0.405	6.09	0.727
TC 0421U CH 13	609.0	0.557	0.74	0.088
TC 0521U CH 3	617.9	0.285	9.65	1.152
TC 1021U CH 29	614.0	0.174	5.73	0.684
TC 1421U CH 17	625.7	0.505	17.42	2.080
TC 1621U CH 21	616.2	0.405	7.94	0.948

RESULTS FOR GROUNDED JUNCTION THERMOCOUPLES
FFM SERIES 2 TEST 10 RUN 1504 DONE ON 30972 1414

DESCRIPTION	TEMP DEG F	STD DEV	RISE AB INLET T	NORMALIZED TEMP
TC 0118C CH 3	612.0	0.363	3.79	0.453
TC 0618D CH 4	634.3	0.378	26.02	3.108
TC 0618C CH 19	648.3	0.285	40.02	4.780
TC 0219A HEATER 2	608.0	0.408	-0.20	-0.024
TC 0219B CH 10	608.0	0.299	-0.24	-0.029
TC 0919A HTR 9 EXT	608.0	0.203	-0.26	-0.031
TC 0919B CH 29	608.4	0.341	0.12	0.014
TC 0718C CH 5	609.1	0.290	0.83	0.099
TC 0718D CH 6	609.3	0.310	1.08	0.129
TC 0319A HEATER 3	608.3	0.408	0.02	0.002
TC 0319B CH 12	608.2	0.398	-0.06	-0.007

RESULTS FOR DUCT WALL THERMOCOUPLES
FFM SERIES 2 TEST 10 RUN 1504 DONE ON 30972 1414

DESCRIPTION	TEMP DEG F	STD DEV	RISE AB INLET T	NORMALIZED TEMP
TC D0B04 DUCT B	608.4	0.193	0.18	0.021
TC D0E04 DUCT E	608.6	0.210	0.36	0.043
TC D0F04 DUCT F	612.6	0.110	4.32	0.516
TC D0B08 DUCT B	608.3	0.287	0.01	0.001
TC D0D08 DUCT D	608.0	0.110	-0.20	-0.024
TC D0F08 DUCT F	618.8	0.125	10.61	1.267
TC D0B12 DUCT B	608.1	0.287	-0.14	-0.017
TC D0E12 DUCT E	618.4	0.179	10.15	1.212
TC D0F12 DUCT F	610.4	0.287	2.16	0.258
TC D0B16 DUCT B	608.1	0.162	-0.15	-0.018
TC D0D16 DUCT D	613.6	0.132	5.34	0.638
TC D0F16 DUCT F	621.4	0.132	13.14	1.569
TC D0D18 DUCT D	615.3	0.287	7.04	0.841
TC D0E18 DUCT E	615.8	0.132	7.54	0.900
TC DAB18 DUCT AB	608.4	0.125	0.16	0.019
TC DDE18 DUCT DE	614.0	0.287	5.76	0.688
TC DEF18 DUCT EF	620.4	0.197	12.15	1.451
TC D0F18 DUCT F	625.8	0.162	17.60	2.102
TC DFA18 DUCT FA	612.4	0.253	4.16	0.497
TC D0B21 DUCT B	608.2	0.405	-0.02	-0.002
TC D0D21 DUCT D	613.3	0.328	5.03	0.601
TC D0F21 DUCT F	626.5	0.374	18.22	2.176
TC D0B23 DUCT B	608.4	0.408	0.12	0.014
TC D0D23 DUCT D	613.3	0.483	5.08	0.607
TC D0F23 DUCT F	613.8	0.348	5.58	0.666

RESULTS FOR THERMOCOUPLES IN CHANNEL EXITS
FFM SERIES 2 TEST 10 RUN 1504 DONE ON 30972 1414

DESCRIPTION	TEMP DEG F	STD DEV	RISE AB INLET T	NORMALIZED TEMP
TC EC03 EXIT CH 3	626.2	0.530	17.97	2.146
TC EC16 EXIT CH 16	627.7	0.374	19.42	2.319
TC EC17 EXIT CH 17	636.7	0.336	28.44	3.397
TC EC34 EXIT CH 34	641.0	0.130	32.74	3.910
TC EC35 EXIT CH 35	633.6	0.377	25.35	3.028
TC EC36 EXIT CH 36	628.7	0.411	20.48	2.446
TC EC06 EXIT CH 6	609.3	0.203	1.11	0.133
TC EC08 EXIT CH 8	609.3	0.190	1.05	0.125
TC EC27 EXIT CH 27	615.7	0.761	7.47	0.892
TC EA36 EXIT ANN EF	628.0	0.553	19.72	2.355
TC EA27 EXIT ANN BC	615.5	0.320	7.22	0.862
TC EA28 EXIT ANN C	619.9	0.385	11.70	1.397

RESULTS FOR THERMOCOUPLES INSIDE HEATERS
FFM SERIES 2 TEST 10 RUN 1504 DONE ON 30972 1414

DESCRIPTION	TEMP DEG F	STD DEV	RISE AB INLET T	NORMALIZED TEMP
TC R0118AB HTR 1 INT	612.5	0.287	4.31	0.515
TC R0219AB HTR 2 INT	608.2	0.405	-0.02	-0.002
TC R0418AB HTR 4 INT	609.7	0.285	1.45	0.173
TC R0518AB HTR 5 INT	615.3	0.215	7.10	0.848
TC R1019AB HEATER 10	608.4	0.341	0.12	0.014
TC R1218AB HEATER 12	615.6	0.645	7.33	0.875
TC R1318DE HEATER 13	617.5	0.504	9.28	1.108
TC R1418AB HEATER 14	626.7	0.336	18.44	2.202
TC R1518AB HEATER 15	784.8	0.457	176.60	21.091
TC R1618AB HEATER 16	611.9	0.543	3.65	0.436
TC R1718AB HEATER 17	610.3	0.299	2.03	0.242
TC R1817AB HEATER 18	608.0	0.374	-0.25	-0.030
TC R0118BC HEATER 1	612.0	0.550	3.79	0.453
TC R0118CD HEATER 1	611.9	0.371	3.63	0.434
TC R0118DE HEATER 1	610.2	0.260	1.97	0.235
TC R0219BC HEATER 2	607.7	0.418	-0.55	-0.066
TC R0418BC HEATER 4	610.7	0.294	2.42	0.289
TC R0418CD HEATER 4	610.9	0.496	2.69	0.321
TC R0418DE HEATER 4	612.6	0.261	4.36	0.521
TC R0518BC HEATER 5	615.3	0.377	7.04	0.841
TC R0518CD HEATER 5	615.7	0.418	7.45	0.890
TC R0718BC HEATER 7	608.1	0.261	-0.15	-0.018
TC R0718CD HEATER 7	608.2	0.418	-0.03	-0.004
TC R0718DE HEATER 7	608.1	0.377	-0.11	-0.013
TC R0818BC HEATER 8	608.1	0.320	-0.13	-0.016
TC R1019BC HEATER 10	608.0	0.261	-0.19	-0.023
TC R1718BC HEATER 17	610.2	0.196	1.96	0.234
TC R1918DE HEATER 19	607.8	0.183	-0.49	-0.059

OPERATING DATA FOR FFM SERIES 2 TEST 10 RUN 1604
WHICH WAS DONE ON 30972 1439

DESCRIPTION	MEAN VALUE	STANDARD DEVIATION
HEATER 1 POWER KW	-0.03	0.004
HEATER 8,18,19 POWER	0.0	0.0
HTR 12,13,14 POWER	-0.08	0.0
HTR 2,7,9,17 POWER	-0.03	0.018
HTR 4,5,11,15 POWER	-0.08	0.0
HTR 3,6,10,16 POWER	17.67	0.0
TOTAL POWER	16.52	0.0
TEST SECT FLOW, GPM	54.33	0.086
TEST SECT INLET PR	34.35	0.077
TEST SECT OUTLET PR	8.73	0.013
TOTAL FLOW, GPM	113.06	2.336
PUMP OUTLET PR, PSI	35.97	0.070
PUMP SPEED, RPM	1505.00	0.707
BLOWER SPEED, RPM	50.53	0.810
AIR FLOW (200 F) CFM	0.98	0.009
TC 313 TEST SECT IN	606.64	0.345
TC 317 TEST SECT OUT	615.00	0.234
TC 300 PUMP OUTLET	606.41	0.345
TC 318 RADIATOR IN	615.09	0.285
TC 334 RADIATOR OUT	605.84	0.507
TC 336 PUMP INLET	606.51	0.374
TC 332 RAD AIR IN	296.29	2.359
TC 331 RAD AIR OUT	338.98	1.461

HEAT BALANCE ON SODIUM FLOWING THROUGH BUNDLE
HEAT SUPPLIED BY DUMMY FUEL RODS = 60343.04 BTU/HR
HEAT ADDED TO SODIUM = 61226.26 BTU/HR
PERCENT HEAT BALANCE = 101.46

RESULTS FOR UNGROUNDED JUNCTION THERMOCOUPLES
FFM SERIES 2 TEST 10 RUN 1604 DONE ON 30972 1439

DESCRIPTION	TEMP DEG F	STD DEV	RISE AB INLET T	NORMALIZED TEMP
TC 1504U CH 37	607.6	0.480	0.94	0.114
TC 1706U CH 21	615.4	0.339	8.75	1.062
TC 1807U CH 24	606.3	0.352	-0.31	-0.038
TC 1108U CH 31	606.7	0.359	0.03	0.004
TC 0409U CH 13	606.3	0.397	-0.29	-0.035
TC 0509U CH 3	606.6	0.472	0.01	0.001
TC 1009U CH 29	606.5	0.415	-0.15	-0.018
TC 1409U CH 17	606.7	0.359	0.06	0.007
TC 1609U CH 21	670.0	0.480	63.36	7.690
TC 1914U CH 24	606.2	0.520	-0.46	-0.056
TC 0815U CH 8	606.1	0.525	-0.52	-0.063
TC 1216U CH 35	613.9	0.421	7.30	0.886
TC 1516U CH 37	631.4	0.402	24.80	3.010
TC 0817U CH 9	606.1	0.525	-0.52	-0.063
TC 1217U CH 33	612.7	0.472	6.06	0.735
TC 1318U CH 34	613.1	0.381	6.44	0.782
TC 1718U CH 22	625.3	0.345	18.67	2.266
TC 1219U CH 32	613.4	0.711	6.75	0.819
TC 1819U CH 24	606.8	0.534	0.15	0.018
TC 1120U CH 31	612.0	0.253	5.33	0.647
TC 0421U CH 13	606.6	0.760	-0.07	-0.009
TC 0521U CH 3	608.2	0.534	1.55	0.188
TC 1021U CH 29	609.1	0.534	2.45	0.297
TC 1421U CH 17	613.8	0.760	7.15	0.868
TC 1621U CH 21	677.6	0.573	70.92	8.607

RESULTS FOR GROUNDED JUNCTION THERMOCOUPLES
FFM SERIES 2 TEST 10 RUN 1604 DONE ON 30972 1439

DESCRIPTION	TEMP DEG F	STD DEV	RISE AB INLET T	NORMALIZED TEMP
TC 0118C CH 3	606.7	0.563	0.03	0.004
TC 0618D CH 4	612.5	0.695	5.88	0.714
TC 0618C CH 19	625.3	0.714	18.61	2.259
TC 0219A HEATER 2	606.2	0.565	-0.48	-0.058
TC 0219B CH 10	606.4	0.520	-0.19	-0.023
TC 0919A HTR 9 EXT	606.5	0.431	-0.13	-0.016
TC 0919B CH 29	606.5	0.530	-0.13	-0.016
TC 0718C CH 5	607.3	0.565	0.62	0.075
TC 0718D CH 6	607.3	0.881	0.68	0.083
TC 0319A HEATER 3	606.4	0.530	-0.23	-0.028
TC 0319B CH 12	606.3	0.613	-0.38	-0.046

RESULTS FOR DUCT WALL THERMOCOUPLES
FFM SERIES 2 TEST 10 RUN 1604 DONE ON 30972 1439

DESCRIPTION	TEMP DEG F	STD DEV	RISE AB INLET T	NORMALIZED TEMP
TC D0B04 DUCT B	606.3	0.578	-0.33	-0.040
TC D0E04 DUCT E	606.2	0.487	-0.47	-0.057
TC D0F04 DUCT F	610.2	0.559	3.53	0.428
TC D0B08 DUCT B	606.7	0.359	0.03	0.004
TC D0D08 DUCT D	606.5	0.367	-0.18	-0.022
TC D0F08 DUCT F	619.9	0.487	13.25	1.608
TC D0B12 DUCT B	606.5	0.397	-0.09	-0.011
TC D0E12 DUCT E	609.5	0.525	2.83	0.343
TC D0F12 DUCT F	613.6	0.359	6.98	0.847
TC D0B16 DUCT B	606.4	0.549	-0.19	-0.023
TC D0D16 DUCT D	608.0	0.430	1.40	0.170
TC D0F16 DUCT F	623.3	0.487	16.63	2.018
TC D0D18 DUCT D	611.6	0.312	4.93	0.598
TC D0E18 DUCT E	613.8	0.314	7.15	0.868
TC DAB18 DUCT AB	607.7	0.427	1.03	0.125
TC DDE18 DUCT DE	610.3	0.497	3.66	0.444
TC DEF18 DUCT EF	617.6	0.345	10.92	1.325
TC D0F18 DUCT F	628.9	0.410	22.22	2.697
TC DFA18 DUCT FA	634.1	0.403	27.48	3.335
TC D0B21 DUCT B	606.7	0.604	0.04	0.005
TC D0D21 DUCT D	610.1	0.534	3.48	0.422
TC D0F21 DUCT F	647.0	0.534	40.38	4.901
TC D0B23 DUCT B	606.9	0.695	0.26	0.032
TC D0D23 DUCT D	610.5	0.835	3.88	0.471
TC D0F23 DUCT F	649.4	0.534	42.78	5.192

RESULTS FOR THERMOCOUPLES IN CHANNEL EXITS
FFM SERIES 2 TEST 10 RUN 1604 DONE ON 30972 1439

DESCRIPTION	TEMP DEG F	STD DEV	RISE AB INLET T	NORMALIZED TEMP
TC EC03 EXIT CH 3	612.6	0.563	5.96	0.723
TC EC16 EXIT CH 16	612.9	0.746	6.22	0.755
TC E 17 EXIT CH 17	618.4	0.530	11.74	1.425
TC EC34 EXIT CH 34	629.6	0.524	22.97	2.788
TC EC35 EXIT CH 35	648.1	0.709	41.43	5.028
TC EC36 EXIT CH 36	637.0	0.443	30.41	3.691
TC EC06 EXIT CH 6	607.5	0.530	0.84	0.102
TC EC08 EXIT CH 8	607.6	0.499	0.95	0.115
TC EC27 EXIT CH 27	614.5	0.398	7.86	0.954
TC EA36 EXIT ANN EF	629.3	0.519	22.63	2.747
TC EA27 EXIT ANN BC	612.6	0.424	5.98	0.726
TC EA28 EXIT ANN C	619.6	1.331	13.01	1.579

RESULTS FOR THERMOCOUPLES INSIDE HEATERS
FFM SERIES 2 TEST 10 RUN 1604 DONE ON 30972 1439

DESCRIPTION	TEMP DEG F	STD DEV	RISE AB INLET T	NORMALIZED TEMP
TC R0118AB HTR 1 INT	607.1	0.312	0.51	0.062
TC R0219AB HTR 2 INT	606.4	0.639	-0.23	-0.028
TC R0418AB HTR 4 INT	606.4	0.676	-0.22	-0.027
TC R0518AB HTR 5 INT	607.3	0.540	0.70	0.085
TC R1019AB HEATER 10	606.5	0.333	-0.17	-0.021
TC R1218AB HEATER 12	609.6	0.493	2.94	0.357
TC R1318DE HEATER 13	612.1	0.695	5.46	0.663
TC R1418AB HEATER 14	619.2	0.711	12.52	1.520
TC R1518AB HEATER 15	633.6	0.565	26.94	3.270
TC R1618AB HEATER 16	895.5	0.647	288.84	35.056
TC R1718AB HEATER 17	623.5	0.711	16.82	2.041
TC R1817AB HEATER 18	606.1	0.563	-0.52	-0.063
TC R0118BC HEATER 1	607.0	0.447	0.33	0.040
TC R0118CD HEATER 1	607.2	0.368	0.56	0.068
TC R0118DE HEATER 1	606.9	0.318	0.27	0.033
TC R0219BC HEATER 2	606.1	0.292	-0.54	-0.066
TC R0418BC HEATER 4	606.4	0.341	-0.21	-0.025
TC R0418CD HEATER 4	606.4	0.443	-0.26	-0.032
TC R0418DE HEATER 4	606.7	0.341	0.04	0.005
TC R0518BC HEATER 5	607.1	0.361	0.49	0.059
TC R0518CD HEATER 5	607.5	0.175	0.91	0.110
TC R0718BC HEATER 7	606.9	0.444	0.25	0.030
TC R0718CD HEATER 7	606.6	0.443	-0.08	-0.010
TC R0718DE HEATER 7	606.9	0.175	0.26	0.032
TC R0818BC HEATER 8	606.5	0.361	-0.16	-0.019
TC R1019BC HEATER 10	606.1	0.325	-0.54	-0.066
TC R1718BC HEATER 17	622.3	0.341	15.69	1.904
TC R1918DE HEATER 19	606.1	0.312	-0.49	-0.059

OPERATING DATA FOR FFM SERIES 2 TEST 10 RUN 1704
WHICH WAS DONE ON 30972 1507

DESCRIPTION	MEAN VALUE	STANDARD DEVIATION
HEATER 1 POWER KW	-0.04	0.005
HEATER 8,18,19 POWER	0.0	0.0
HTR 12,13,14 POWER	-0.11	0.016
HTR 2,7,9,17 POWER	17.69	0.058
HTR 4,5,11,15 POWER	-0.09	0.021
HTR 3,6,10,16 POWER	-0.14	0.022
TOTAL POWER	16.84	0.196
TEST SECT FLOW, GPM	54.36	0.054
TEST SECT INLET PR	34.34	0.110
TEST SECT OUTLET PR	8.75	0.052
TOTAL FLOW, GPM	113.55	1.863
PUMP OUTLET PR, PSI	36.00	0.055
PUMP SPEED, RPM	1504.83	0.753
BLOWER SPEED, RPM	57.45	0.736
AIR FLOW (200 F) CFM	0.99	0.005
TC 313 TEST SECT IN	603.90	0.153
TC 317 TEST SECT OUT	612.69	0.157
TC 300 PUMP OUTLET	604.10	0.203
TC 318 RADIATOR IN	612.61	0.266
TC 334 RADIATOR OUT	604.23	0.392
TC 336 PUMP INLET	604.12	0.233
TC 332 RAD AIR IN	303.13	3.384
TC 331 RAD AIR OUT	348.65	11.182

HEAT BALANCE ON SODIUM FLOWING THROUGH BUNDLE
HEAT SUPPLIED BY DUMMY FUEL RODS = 60411.30 BTU/HR
HEAT ADDED TO SODIUM = 64451.18 BTU/HR
PERCENT HEAT BALANCE = 106.69

RESULTS FOR UNGROUNDED JUNCTION THERMOCOUPLES
FFM SERIES 2 TEST 10 RUN 1704 DONE ON 30972 1507

DESCRIPTION	TEMP DEG F	STD DEV	RISE AB INLET T	NORMALIZED TEMP
TC 1504U CH 37	603.9	0.226	-0.04	-0.005
TC 1706U CH 21	649.2	0.219	45.27	5.495
TC 1807U CH 24	618.2	0.277	14.28	1.733
TC 1108U CH 31	604.3	0.105	0.37	0.045
TC 0409U CH 13	604.0	0.168	0.08	0.010
TC 0509U CH 3	603.9	0.091	0.0	0.0
TC 1009U CH 29	603.8	0.281	-0.12	-0.015
TC 1409U CH 17	604.3	0.105	0.39	0.047
TC 1609U CH 21	620.8	0.294	16.88	2.049
TC 1914U CH 24	604.6	0.177	0.74	0.090
TC 0815U CH 8	604.2	0.268	0.30	0.036
TC 1316U CH 35	608.2	0.195	4.26	0.517
TC 1516U CH 37	613.1	0.251	9.23	1.120
TC 0817U CH 9	603.8	0.090	-0.10	-0.012
TC 1217U CH 33	606.9	0.359	3.03	0.368
TC 1318U CH 34	607.6	0.195	3.73	0.453
TC 1718U CH 22	671.2	0.287	67.33	8.172
TC 1219U CH 32	606.7	0.669	2.77	0.336
TC 1819U CH 24	611.3	0.595	7.44	0.903
TC 1120U CH 31	604.5	1.280	0.63	0.076
TC 0421U CH 13	603.3	0.627	-0.63	-0.076
TC 0521U CH 3	603.6	0.732	-0.29	-0.035
TC 1021U CH 29	603.6	0.726	-0.28	-0.034
TC 1421U CH 17	607.1	0.581	3.24	0.393
TC 1621U CH 21	638.7	0.625	34.76	4.219

RESULTS FOR GROUNDED JUNCTION THERMOCOUPLES
FFM SERIES 2 TEST 10 RUN 1704 DONE ON 30972 1507

DESCRIPTION	TEMP DEG F	STD DEV	RISE AB INLET T	NORMALIZED TEMP
TC 0118C CH 3	603.4	0.733	-0.45	-0.055
TC 0618D CH 4	605.4	0.580	1.47	0.178
TC 0618C CH 19	611.7	0.656	7.76	0.942
TC 0219A HEATER 2	603.3	0.660	-0.57	-0.069
TC 0219B CH 10	603.6	0.479	-0.27	-0.033
TC 0919A HTR 9 EXT	603.2	0.525	-0.66	-0.080
TC 0919B CH 29	603.6	0.479	-0.27	-0.033
TC 0718C CH 5	608.4	0.705	4.47	0.543
TC 0718D CH 6	611.1	0.501	7.19	0.873
TC 0319A HEATER 3	603.5	0.479	-0.37	-0.045
TC 0319B CH 12	603.4	0.620	-0.48	-0.058

RESULTS FOR DUCT WALL THERMOCOUPLES
FFM SERIES 2 TEST 10 RUN 1704 DONE ON 30972 1507

DESCRIPTION	TEMP DEG F	STD DEV	RISE AB INLET T	NORMALIZED TEMP
TC D0B04 DUCT B	604.0	0.157	0.14	0.017
TC D0E04 DUCT E	603.8	0.178	-0.10	-0.012
TC D0F04 DUCT F	604.3	0.116	0.38	0.046
TC D0B08 DUCT B	603.9	0.167	0.02	0.002
TC D0D08 DUCT D	603.7	0.241	-0.22	-0.027
TC D0F08 DUCT F	605.4	0.195	1.52	0.184
TC D0B12 DUCT B	604.6	0.268	0.69	0.084
TC D0E12 DUCT E	604.5	0.091	0.65	0.079
TC D0F12 DUCT F	610.3	0.116	6.45	0.783
TC D0B16 DUCT B	605.4	0.233	1.50	0.182
TC D0D16 DUCT D	604.4	0.105	0.52	0.063
TC D0F16 DUCT F	613.0	0.116	9.15	1.111
TC D0D18 DUCT D	605.7	0.105	1.79	0.217
TC D0E18 DUCT E	608.3	0.090	4.45	0.540
TC DAB18 DUCT AB	609.7	0.235	5.76	0.699
TC DDE18 DUCT DE	605.8	0.088	1.91	0.232
TC DEF18 DUCT EF	610.1	0.109	6.18	0.750
TC D0F18 DUCT F	613.7	0.288	9.76	1.185
TC DFA18 DUCT FA	621.8	0.108	17.93	2.176
TC D0B21 DUCT B	603.6	0.705	-0.33	-0.040
TC D0D21 DUCT D	604.3	0.701	0.38	0.046
TC D0F21 DUCT F	618.8	0.595	14.86	1.804
TC D0B23 DUCT B	604.1	0.738	0.20	0.024
TC D0D23 DUCT D	604.8	0.694	0.85	0.103
TC D0F23 DUCT F	631.6	0.556	27.66	3.357

RESULTS FOR THERMOCOUPLES IN CHANNEL EXITS
FFM SERIES 2 TEST 10 RUN 1704 DONE ON 30972 1507

DESCRIPTION	TEMP DEG F	STD DEV	RISE AB INLET T	NORMALIZED TEMP
TC EC03 EXIT CH 3	605.5	0.775	1.56	0.189
TC EC16 EXIT CH 16	606.2	0.660	2.26	0.274
TC EC17 EXIT CH 17	608.6	0.611	4.72	0.573
TC EC34 EXIT CH 34	614.4	0.387	10.47	1.271
TC EC35 EXIT CH 35	620.7	0.527	16.84	2.044
TC EC36 EXIT CH 36	622.3	0.856	18.40	2.233
TC EC06 EXIT CH 6	608.6	0.439	4.66	0.566
TC EC08 EXIT CH 8	604.6	0.220	0.75	0.091
TC EC27 EXIT CH 27	608.1	0.322	4.18	0.507
TC EA36 EXIT ANN EF	620.3	0.408	16.45	1.997
TC EA27 EXIT ANN BC	607.4	0.200	3.52	0.427
TC EA28 EXIT ANN C	610.6	0.344	6.72	0.816

RESULTS FOR THERMOCOUPLES INSIDE HEATERS
FFM SERIES 2 TEST 10 RUN 1704 DONE ON 30972 1507

DESCRIPTION	TEMP DEG F	STD DEV	RISE AB INLET T	NORMALIZED TEMP
TC R0118AB HTR 1 INT	605.2	0.177	1.29	0.157
TC R0219AB HTR 2 INT	604.0	0.629	0.14	0.017
TC R0418AB HTR 4 INT	603.2	0.609	-0.66	-0.080
TC R0518AB HTR 5 INT	603.6	0.460	-0.25	-0.030
TC R1019AB HEATER 10	603.3	0.629	-0.64	-0.078
TC R1218AB HEATER 12	603.2	1.130	-0.72	-0.087
TC R1318DE HEATER 13	606.3	0.609	2.36	0.286
TC R1418AB HEATER 14	610.2	0.595	6.34	0.770
TC R1518AB HEATER 15	616.5	0.540	12.58	1.527
TC R1618AB HEATER 16	624.1	0.439	20.21	2.453
TC R1718AB HEATER 17	787.3	0.681	183.44	22.265
TC R1817AB HEATER 18	609.0	0.525	5.06	0.614
TC R0118BC HEATER 1	604.8	0.395	0.89	0.108
TC R0118CD HEATER 1	604.6	0.219	0.75	0.091
TC R0118DE HEATER 1	604.4	0.369	0.49	0.059
TC R0219BC HEATER 2	604.4	0.311	0.50	0.061
TC R0418BC HEATER 4	603.5	0.207	-0.38	-0.046
TC R0418CD HEATER 4	603.8	0.313	-0.11	-0.013
TC R0418DE HEATER 4	604.1	0.339	0.22	0.027
TC R0518BC HEATER 5	604.2	0.203	0.31	0.038
TC R0518CD HEATER 5	604.2	0.348	0.29	0.035
TC R0718BC HEATER 7	606.7	0.703	2.76	0.335
TC R0718CD HEATER 7	607.1	0.297	3.18	0.386
TC R0718DE HEATER 7	605.6	0.219	1.72	0.209
TC R0818BC HEATER 8	603.9	0.278	0.03	0.004
TC R1019BC HEATER 10	603.5	0.256	-0.39	-0.047
TC R1718BC HEATER 17	790.4	0.174	186.48	22.634
TC R1918DE HEATER 19	604.6	0.308	0.70	0.085

OPERATING DATA FOR FFM SERIES 2 TEST 10 RUN 1804
WHICH WAS DONE ON 30972 1527

DESCRIPTION	MEAN VALUE	STANDARD DEVIATION
HEATER 1 POWER KW	-0.03	0.005
HEATER 8,18,19 POWER	17.73	0.036
HTR 12,13,14 POWER	-0.10	0.022
HTR 2,7,9,17 POWER	-0.06	0.022
HTR 4,5,11,15 POWER	-0.09	0.018
HTR 3,6,10,16 POWER	-0.14	0.022
TOTAL POWER	16.47	0.107
TEST SECT FLOW, GPM	54.37	0.097
TEST SECT INLET PR	34.34	0.056
TEST SECT OUTLET PR	8.76	0.032
TOTAL FLOW, GPM	112.50	0.951
PUMP OUTLET PR, PSI	36.01	0.027
PUMP SPEED, RPM	1504.60	0.894
BLOWER SPEED, RPM	52.86	0.767
AIR FLOW (200 F) CFM	0.98	0.004
TC 313 TEST SECT IN	600.44	0.415
TC 317 TEST SECT OUT	609.12	0.616
TC 300 PUMP OUTLET	599.74	0.616
TC 318 RADIATOR IN	608.79	0.558
TC 334 RADIATOR OUT	599.69	0.703
TC 336 PUMP INLET	600.27	0.518
TC 332 RAD AIR IN	296.98	3.411
TC 331 RAD AIR OUT	343.13	19.376

HEAT BALANCE ON SODIUM FLOWING THROUGH BUNDLE
HEAT SUPPLIED BY DUMMY FUEL RODS = 60547.93 BTU/HR
HEAT ADDED TO SODIUM = 63717.61 BTU/HR
PERCENT HEAT BALANCE = 105.23

RESULTS FOR UNGROUNDED JUNCTION THERMOCOUPLES
FFM SERIES 2 TEST 10 RUN 1804 DONE ON 30972 1527

DESCRIPTION	TEMP DEG F	STD DEV	RISE AB INLET T	NORMALIZED TEMP
TC 1504U CH 37	600.0	0.554	-0.47	-0.057
TC 1706U CH 21	600.8	0.587	0.38	0.046
TC 1807U CH 24	663.9	0.572	63.48	7.696
TC 1108U CH 31	600.0	0.614	-0.44	-0.053
TC 0409U CH 13	600.5	0.614	0.06	0.007
TC 0509U CH 3	600.1	0.539	-0.38	-0.046
TC 1009U CH 29	600.3	0.415	-0.10	-0.012
TC 1409U CH 17	600.4	0.622	-0.07	-0.008
TC 1609U CH 21	601.3	0.572	0.85	0.103
TC 1914U CH 24	602.4	0.421	2.01	0.244
TC 0815U CH 8	602.9	0.572	2.48	0.301
TC 1316U CH 35	605.6	0.520	5.18	0.628
TC 1516U CH 37	607.5	0.622	7.06	0.856
TC 0817U CH 9	601.1	0.478	0.69	0.084
TC 1217U CH 33	603.4	0.368	2.99	0.363
TC 1318U CH 34	605.1	0.520	4.66	0.565
TC 1718U CH 22	609.6	0.622	9.13	1.107
TC 1219U CH 32	604.1	0.612	3.62	0.439
TC 1819U CH 24	654.6	0.469	54.14	6.564
TC 1120U CH 31	601.3	0.649	0.85	0.103
TC 0421U CH 13	599.9	0.496	-0.55	-0.067
TC 0521U CH 3	600.7	0.693	0.24	0.029
TC 1021U CH 29	600.2	0.485	-0.23	-0.028
TC 1421U CH 17	604.1	0.687	3.65	0.443
TC 1621U CH 21	609.4	0.469	8.96	1.086

RESULTS FOR GROUNDED JUNCTION THERMOCOUPLES
FFM SERIES 2 TEST 10 RUN 1804 DONE ON 30972 1527

DESCRIPTION	TEMP DEG F	STD DEV	RISE AB INLET T	NORMALIZED TEMP
TC 0118C CH 3	600.4	0.593	-0.08	-0.010
TC 0618D CH 4	600.6	0.447	0.12	0.015
TC 0618C CH 19	600.9	0.704	0.42	0.051
TC 0219A HEATER 2	600.8	0.780	0.35	0.042
TC 0219B CH 10	600.3	0.535	-0.19	-0.023
TC 0919A HTR 9 EXT	600.1	0.727	-0.31	-0.038
TC 0919B CH 29	600.2	0.637	-0.25	-0.030
TC 0718C CH 5	604.9	0.680	4.48	0.543
TC 0718D CH 6	607.1	0.806	6.62	0.803
TC 0319A HEATER 3	600.1	0.425	-0.34	-0.041
TC 0319B CH 12	600.3	0.723	-0.09	-0.011

RESULTS FOR DUCT WALL THERMOCOUPLES
FFM SERIES 2 TEST 10 RUN 1804 DONE ON 30972 1527

DESCRIPTION	TEMP DEG F	STD DEV	RISE AB INLET T	NORMALIZED TEMP
TC D0B04 DUCT B	601.7	0.472	1.28	0.155
TC D0E04 DUCT E	600.2	0.601	-0.22	-0.027
TC D0F04 DUCT F	600.8	0.650	0.33	0.040
TC D0B08 DUCT B	601.2	0.664	0.78	0.095
TC D0D08 DUCT D	600.2	0.644	-0.22	-0.027
TC D0F08 DUCT F	600.6	0.554	0.16	0.019
TC D0B12 DUCT B	601.9	0.531	1.48	0.179
TC D0E12 DUCT E	600.6	0.622	0.16	0.019
TC D0F12 DUCT F	610.3	0.429	9.81	1.189
TC D0B16 DUCT B	607.9	0.506	7.46	0.904
TC D0D16 DUCT D	600.5	0.588	0.09	0.011
TC D0F16 DUCT F	609.0	0.429	8.61	1.044
TC D0D18 DUCT D	601.4	0.588	0.96	0.116
TC D0E18 DUCT E	605.7	0.439	5.27	0.639
TC DAB18 DUCT AB	628.9	0.455	28.50	3.455
TC DDE18 DUCT DE	602.6	0.571	2.20	0.267
TC DEF18 DUCT EF	607.3	0.687	6.89	0.835
TC D0F18 DUCT F	608.8	0.601	8.35	1.012
TC DFA18 DUCT FA	612.7	0.421	12.29	1.490
TC D0B21 DUCT B	602.6	0.447	2.17	0.263
TC D0D21 DUCT D	601.3	0.594	0.82	0.099
TC D0F21 DUCT F	609.7	0.593	9.25	1.121
TC D0B23 DUCT B	604.1	0.612	3.62	0.439
TC D0D23 DUCT D	601.7	0.590	1.27	0.154
TC D0F23 DUCT F	622.0	0.768	21.58	2.616

RESULTS FOR THERMOCOUPLES IN CHANNEL EXITS
FFM SERIES 2 TEST 10 RUN 1804 DONE ON 30972 1527

DESCRIPTION	TEMP DEG F	STD DEV	RISE AB INLET T	NORMALIZED TEMP
TC EC03 EXIT CH 3	601.5	0.606	1.06	0.129
TC EC16 EXIT CH 16	603.6	0.594	3.12	0.378
TC EC17 EXIT CH 17	604.8	0.693	4.34	0.526
TC EC34 EXIT CH 34	609.6	0.693	9.21	1.117
TC EC35 EXIT CH 35	610.4	0.693	9.96	1.208
TC EC36 EXIT CH 36	614.0	0.485	13.59	1.648
TC EC06 EXIT CH 6	606.4	0.425	5.94	0.720
TC EC08 EXIT CH 8	602.5	0.772	2.07	0.251
TC EC27 EXIT CH 27	602.4	0.642	1.95	0.236
TC EA36 EXIT ANN EF	612.6	0.927	12.15	1.473
TC EA27 EXIT ANN BC	602.7	0.814	2.23	0.270
TC EA28 EXIT ANN C	604.0	0.459	3.58	0.434

RESULTS FOR THERMOCOUPLES INSIDE HEATERS
FFM SERIES 2 TEST 10 RUN 1804 DONE ON 30972 1527

DESCRIPTION	TEMP DEG F	STD DEV	RISE AB INLET T	NORMALIZED TEMP
TC R0118AB HTR 1 INT	600.8	0.702	0.40	0.048
TC R0219AB HTR 2 INT	602.6	0.526	2.18	0.264
TC R0418AB HTR 4 INT	600.2	0.561	-0.20	-0.024
TC R0518AB HTR 5 INT	600.2	0.484	-0.23	-0.028
TC R1019AB HEATER 10	600.2	0.704	-0.23	-0.028
TC R1218AB HEATER 12	600.2	0.687	-0.22	-0.027
TC R1318DE HEATER 13	604.5	0.699	4.07	0.493
TC R1418AB HEATER 14	608.0	0.526	7.58	0.919
TC R1518AB HEATER 15	601.4	0.721	0.93	0.113
TC R1618AB HEATER 16	611.1	0.704	10.69	1.296
TC R1718AB HEATER 17	611.2	0.687	10.73	1.301
TC R1817AB HEATER 18	784.8	0.361	184.33	22.348
TC R0118BC HEATER 1	600.1	0.784	-0.33	-0.040
TC R0118CD HEATER 1	600.0	0.784	-0.46	-0.056
TC R0118DE HEATER 1	600.0	0.590	-0.42	-0.051
TC R0219BC HEATER 2	601.4	0.548	0.98	0.119
TC R0418BC HEATER 4	599.6	0.584	-0.85	-0.103
TC R0418CD HEATER 4	599.5	0.735	-0.93	-0.113
TC R0418DE HEATER 4	599.8	0.570	-0.63	-0.076
TC R0518BC HEATER 5	599.4	0.548	-1.02	-0.124
TC R0518CD HEATER 5	599.4	0.735	-1.03	-0.125
TC R0718BC HEATER 7	604.7	0.619	4.26	0.516
TC R0718CD HEATER 7	604.1	0.686	3.62	0.439
TC R0718DE HEATER 7	604.0	0.686	3.54	0.429
TC R0818BC HEATER 8	599.7	0.548	-0.77	-0.093
TC R1019BC HEATER 10	599.2	0.496	-1.20	-0.145
TC R1718BC HEATER 17	611.6	0.686	11.19	1.357
TC R1918DE HEATER 19	602.6	0.448	2.19	0.266

OPERATING DATA FOR FFM SERIES 2 TEST 10 RUN 1904
WHICH WAS DONE ON 31072 915

DESCRIPTION	MEAN VALUE	STANDARD DEVIATION
HEATER 1 POWER KW	-0.04	0.005
HEATER 8,18,19 POWER	17.79	0.0
HTR 12,13,14 POWER	-0.09	0.018
HTR 2,7,9,17 POWER	-0.04	0.0
HTR 4,5,11,15 POWER	-0.08	0.0
HTR 3,6,10,16 POWER	-0.14	0.022
TOTAL POWER	16.52	0.0
TEST SECT FLOW, GPM	54.24	0.097
TEST SECT INLET PR	33.97	0.078
TEST SECT OUTLET PR	8.74	0.034
TOTAL FLOW, GPM	112.64	0.635
PUMP OUTLET PR, PSI	35.64	0.059
PUMP SPEED, RPM	1497.00	1.225
BLOWER SPEED, RPM	44.80	0.949
AIR FLOW (200 F) CFM	1.01	0.005
TC 313 TEST SECT IN	617.27	0.052
TC 317 TEST SECT OUT	625.89	0.297
TC 300 PUMP OUTLET	617.45	0.089
TC 318 RADIATOR IN	625.90	0.137
TC 334 RADIATOR OUT	618.14	0.052
TC 336 PUMP INLET	617.47	0.186
TC 332 RAD AIR IN	306.03	1.018
TC 331 RAD AIR OUT	366.45	6.627

HEAT BALANCE ON SODIUM FLOWING THROUGH BUNDLE
HEAT SUPPLIED BY DUMMY FUEL RODS = 60752.82 BTU/HR
HEAT ADDED TO SODIUM = 62839.47 BTU/HR
PERCENT HEAT BALANCE = 103.43

RESULTS FOR UNGROUNDED JUNCTION THERMOCOUPLES
FFM SERIES 2 TEST 10 RUN 1904 DONE ON 31072 915

DESCRIPTION	TEMP DEG F	STD DEV	RISE AB INLET T	NORMALIZED TEMP
TC 1504U CH 37	617.3	0.278	0.04	0.005
TC 1706U CH 21	617.4	0.186	0.15	0.018
TC 1807U CH 24	624.9	0.213	7.60	0.912
TC 1108U CH 31	617.3	0.052	0.04	0.005
TC 0409U CH 13	617.4	0.171	0.13	0.016
TC 0509U CH 3	617.1	0.237	-0.17	-0.020
TC 1009U CH 29	617.3	0.052	0.07	0.008
TC 1409U CH 17	617.3	0.052	0.04	0.005
TC 1609U CH 21	617.4	0.268	0.09	0.011
TC 1914U CH 24	666.9	0.260	49.66	5.959
TC 0815U CH 8	657.0	0.213	39.78	4.773
TC 1316U CH 35	619.5	0.273	2.23	0.268
TC 1516U CH 37	619.9	0.213	2.68	0.322
TC 0817U CH 9	631.7	0.299	14.41	1.729
TC 1217U CH 33	618.3	0.407	1.00	0.120
TC 1318U CH 34	619.7	0.052	2.39	0.287
TC 1718U CH 22	620.7	0.299	3.39	0.407
TC 1219U CH 32	618.6	0.644	1.38	0.166
TC 1819U CH 24	659.8	0.712	42.50	5.100
TC 1120U CH 31	617.8	0.744	0.58	0.070
TC 0421U CH 13	618.1	0.712	0.88	0.106
TC 0521U CH 3	618.0	0.796	0.73	0.088
TC 1021U CH 29	617.6	0.690	0.29	0.035
TC 1421U CH 17	618.9	0.477	1.65	0.198
TC 1621U CH 21	620.2	0.640	2.93	0.352

RESULTS FOR GROUNDED JUNCTION THERMOCOUPLES
FFM SERIES 2 TEST 10 RUN 1904 DONE ON 31072 915

DESCRIPTION	TEMP DEG F	STD DEV	RISE AB INLET T	NORMALIZED TEMP
TC 0118C CH 3	618.3	0.676	1.06	0.127
TC 0618D CH 4	618.0	0.574	0.75	0.090
TC 0618C CH 19	617.7	0.547	0.41	0.049
TC 0219A HEATER 2	621.1	0.528	3.86	0.463
TC 0219B CH 10	619.3	0.408	2.08	0.250
TC 0919A HTR 9 EXT	618.3	0.796	0.98	0.118
TC 0919B CH 29	617.5	0.528	0.20	0.024
TC 0718C CH 5	624.6	0.581	7.36	0.883
TC 0718D CH 6	625.1	0.499	7.82	0.938
TC 0319A HEATER 3	617.4	0.796	0.13	0.016
TC 0319B CH 12	617.6	0.574	0.34	0.041

RESULTS FOR DUCT WALL THERMCCOUPLES
FFM SERIES 2 TEST 10 RUN 1904 DONE ON 31072 915

DESCRIPTION	TEMP DEG F	STD DEV	RISE AB INLET T	NORMALIZED TEMP
TC DOB04 DUCT B	623.1	0.436	5.84	0.701
TC DOE04 DUCT E	617.3	0.052	0.03	0.004
TC DOF04 DUCT F	617.4	0.052	0.09	0.011
TC DOB08 DUCT B	618.0	0.171	0.71	0.085
TC DOD08 DUCT D	617.3	0.137	0.02	0.002
TC DOF08 DUCT F	616.9	0.273	-0.35	-0.042
TC DOB12 DUCT B	626.4	0.203	9.10	1.092
TC DOE12 DUCT E	616.9	0.354	-0.33	-0.040
TC DOF12 DUCT F	622.2	0.155	4.92	0.590
TC DOB16 DUCT B	643.1	0.089	25.87	3.104
TC DOD16 DUCT D	617.4	0.213	0.12	0.014
TC DOF16 DUCT F	620.4	0.089	3.13	0.376
TC DOD18 DUCT D	616.9	0.225	-0.35	-0.042
TC DOE18 DUCT E	619.7	0.120	2.41	0.289
TC DAB18 DUCT AB	635.2	0.260	17.89	2.147
TC DDE18 DUCT DE	617.6	0.237	0.34	0.041
TC DEF18 DUCT EF	619.7	0.213	2.42	0.290
TC DOF18 DUCT F	620.3	0.260	3.02	0.362
TC DFA18 DUCT FA	621.6	0.260	4.33	0.520
TC DOB21 DUCT B	621.8	0.471	4.52	0.542
TC DOD21 DUCT D	617.8	0.731	0.54	0.065
TC DOF21 DUCT F	621.0	0.779	3.70	0.444
TC DOB23 DUCT B	628.2	0.644	10.92	1.310
TC DOD23 DUCT D	617.5	0.495	0.25	0.030
TC DOF23 DUCT F	625.6	0.574	8.34	1.001

RESULTS FOR THERMOCOUPLES IN CHANNEL EXITS
FFM SERIES 2 TEST 10 RUN 1904 DONE ON 31072 915

DESCRIPTION	TEMP DEG F	STD DEV	RISE AB INLET T	NORMALIZED TEMP
TC EC03 EXIT CH 3	618.4	0.676	1.18	0.142
TC EC16 EXIT CH 16	618.8	0.574	1.48	0.178
TC EC17 EXIT CH 17	619.4	0.676	2.12	0.254
TC EC34 EXIT CH 34	621.6	0.472	4.35	0.522
TC EC35 EXIT CH 35	621.4	0.574	4.10	0.492
TC EC36 EXIT CH 36	625.3	0.880	8.02	0.962
TC EC06 EXIT CH 6	634.3	0.733	17.01	2.041
TC EC08 EXIT CH 8	651.4	0.336	34.14	4.097
TC EC27 EXIT CH 27	620.8	0.336	3.58	0.430
TC EA36 EXIT ANN EF	624.6	0.311	7.33	0.880
TC EA27 EXIT ANN BC	622.1	0.336	4.85	0.582
TC EA28 EXIT ANN C	621.6	0.366	4.37	0.524

RESULTS FOR THERMOCOUPLES INSIDE HEATERS
FFM SERIES 2 TEST 10 RUN 1904 DONE ON 31072 915

DESCRIPTION	TEMP DEG F	STD DEV	RISE AB INLET T	NORMALIZED TEMP
TC R0118AB HTR 1 INT	619.4	0.120	2.11	0.253
TC R0219AB HTR 2 INT	640.5	0.596	23.27	2.792
TC R0418AB HTR 4 INT	617.5	0.580	0.20	0.024
TC R0518AB HTR 5 INT	617.4	0.703	0.16	0.019
TC R1019AB HEATER 10	617.7	0.755	0.43	0.052
TC R1218AB HEATER 12	617.6	0.528	0.34	0.041
TC R1318DE HEATER 13	619.6	0.528	2.30	0.276
TC R1418AB HEATER 14	620.9	0.574	3.63	0.436
TC R1518AB HEATER 15	617.6	0.676	0.38	0.046
TC R1618AB HEATER 16	621.0	0.613	3.69	0.443
TC R1718AB HEATER 17	621.9	0.472	4.59	0.551
TC R1817AB HEATER 18	642.6	0.477	25.33	3.039
TC R0118BC HEATER 1	618.8	0.174	1.57	0.188
TC R0118CD HEATER 1	619.5	0.294	2.27	0.272
TC R0118DE HEATER 1	619.0	0.174	1.76	0.211
TC R0219BC HEATER 2	635.0	0.567	17.77	2.132
TC R0418BC HEATER 4	618.2	0.366	0.92	0.110
TC R0418CD HEATER 4	618.1	0.311	0.79	0.095
TC R0418DE HEATER 4	617.9	0.174	0.67	0.080
TC R0518BC HEATER 5	617.9	0.411	0.67	0.080
TC R0518CD HEATER 5	618.4	0.174	1.17	0.140
TC R0718BC HEATER 7	634.2	0.408	16.95	2.034
TC R0718CD HEATER 7	635.5	0.242	18.25	2.190
TC R0718DE HEATER 7	646.5	0.449	29.27	3.512
TC R0818BC HEATER 8	625.0	0.332	7.76	0.931
TC R1019BC HEATER 10	617.8	0.174	0.51	0.061
TC R1718BC HEATER 17	623.2	0.270	5.97	0.716
TC R1918DE HEATER 19	794.4	0.278	177.16	21.258

OPERATING DATA FOR FFM SERIES 2 TEST 11 RUN 101
WHICH WAS DONE ON 32872 1416

DESCRIPTION	MEAN VALUE	STANDARD DEVIATION
HEATER 1 POWER KW	0.50	0.0
HEATER 8,18,19 POWER	2.91	0.010
HTR 12,13,14 POWER	0.85	0.013
HTR 2,7,9,17 POWER	2.51	0.005
HTR 4,5,11,15 POWER	1.60	0.005
HTR 3,6,10,16 POWER	1.96	0.005
TOTAL POWER	10.24	0.0
TEST SECT FLOW, GPM	0.90	0.038
TEST SECT INLET PR	8.56	0.095
TEST SECT OUTLET PR	6.19	0.023
TOTAL FLOW, GPM	8.97	0.297
PUMP OUTLET PR, PSI	7.41	0.044
PUMP SPEED, RPM	173.06	0.669
BLOWER SPEED, RPM	1.92	5.694
AIR FLOW (200 F) CFM	0.96	0.005
TC 313 TEST SECT IN	588.98	0.419
TC 317 TEST SECT OUT	878.88	0.603
TC 300 PUMP OUTLET	591.52	0.477
TC 318 RADIATOR IN	747.68	0.650
TC 334 RADIATOR OUT	613.70	0.242
TC 336 PUMP INLET	593.83	0.366
TC 332 RAD AIR IN	132.97	0.256
TC 331 RAD AIR OUT	206.40	1.654

HEAT BALANCE ON SODIUM FLOWING THROUGH BUNDLE
HEAT SUPPLIED BY DUMMY FUEL RODS = 35276.94 BTU/HR
HEAT ADDED TO SODIUM = 35332.52 BTU/HR
PERCENT HEAT BALANCE = 100.16

RESULTS FOR UNGROUNDED JUNCTION THERMOCOUPLES
FFM SERIES 2 TEST 11 RUN 101 DONE ON 32872 1416

DESCRIPTION	TEMP DEG F	STD DEV	RISE AB INLET T	NORMALIZED TEMP
TC 1504U CH 37	628.6	0.146	39.67	0.137
TC 1706U CH 21	679.0	0.097	89.99	0.311
TC 1807U CH 24	706.2	0.294	117.23	0.405
TC 1108U CH 31	685.6	0.167	96.62	0.334
TC 0409U CH 13	705.5	0.463	116.52	0.403
TC 0509U CH 3	708.0	0.095	119.04	0.411
TC 1009U CH 29	708.3	0.290	119.37	0.412
TC 1409U CH 17	691.4	0.275	102.47	0.354
TC 1609U CH 21	720.0	0.207	131.01	0.453
TC 1914U CH 24	778.5	0.273	189.48	0.655
TC 0815U CH 8	821.2	0.239	232.22	0.802
TC 1316U CH 35	816.6	0.405	227.60	0.786
TC 1516U CH 37	794.6	0.222	205.62	0.710
TC 0817U CH 9	846.3	0.376	257.27	0.889
TC 1217U CH 33	798.4	0.294	209.38	0.723
TC 1318U CH 34	787.1	0.355	198.14	0.685
TC 1718U CH 22	849.8	0.303	260.80	0.901
TC 1219U CH 32	831.0	0.496	241.99	0.836
TC 1819U CH 24	878.8	0.625	289.77	1.001
TC 1120U CH 31	851.0	0.909	262.02	0.905
TC 0421U CH 13	879.2	0.511	290.25	1.003
TC 0521U CH 3	881.0	0.664	292.00	1.009
TC 1021U CH 29	878.3	0.320	289.35	1.000
TC 1421U CH 17	865.6	0.593	276.63	0.956
TC 1621U CH 21	887.8	0.466	298.80	1.032

RESULTS FOR GROUNDED JUNCTION THERMOCOUPLES
FFM SERIES 2 TEST 11 RUN 101 DONE ON 32872 1416

DESCRIPTION	TEMP DEG F	STD DEV	RISE AB INLET T	NORMALIZED TEMP
TC 0118C CH 3	844.4	0.615	255.43	0.882
TC 0618D CH 4	844.8	0.413	255.87	0.884
TC 0618C CH 19	840.9	0.566	251.92	0.870
TC 0219A HEATER 2	872.4	0.717	283.42	0.979
TC 0219B CH 10	871.2	0.719	282.19	0.975
TC 0919A HTR 9 EXT	857.6	0.311	268.66	0.928
TC 0919B CH 29	852.1	0.813	263.16	0.909
TC 0718C CH 5	861.2	1.224	272.20	0.940
TC 0718D CH 6	856.8	0.657	267.85	0.925
TC 0319A HEATER 3	854.5	0.592	265.48	0.917
TC 0319B CH 12	851.8	0.639	262.80	0.908

RESULTS FOR DUCT WALL THERMOCOUPLES
FFM SERIES 2 TEST 11 RUN 101 DONE ON 32872 1416

DESCRIPTION	TEMP DEG F	STD DEV	RISE AB INLET T	NORMALIZED TEMP
TC D0B04 DUCT B	641.5	0.228	52.55	0.182
TC D0E04 DUCT E	617.9	0.120	28.89	0.100
TC D0F04 DUCT F	623.8	0.233	34.81	0.120
TC D0B08 DUCT B	697.9	0.207	108.89	0.376
TC D0D08 DUCT D	676.9	0.182	87.90	0.304
TC D0F08 DUCT F	678.7	0.275	89.71	0.310
TC D0B12 DUCT B	762.3	0.146	173.36	0.599
TC D0E12 DUCT E	723.9	0.256	134.88	0.466
TC D0F12 DUCT F	736.5	0.179	147.49	0.510
TC D0B16 DUCT B	818.8	0.352	229.86	0.794
TC D0D16 DUCT D	784.8	0.323	195.83	0.677
TC D0F16 DUCT F	793.2	0.540	204.21	0.706
TC D0D18 DUCT D	817.2	0.555	228.20	0.788
TC D0E18 DUCT E	812.4	0.446	223.42	0.772
TC DAB18 DUCT AB	843.0	0.376	253.99	0.878
TC DDE18 DUCT DE	814.6	0.518	225.60	0.779
TC DEF18 DUCT EF	815.8	0.618	226.87	0.784
TC D0F18 DUCT F	820.5	0.512	231.56	0.800
TC DFA18 DUCT FA	829.4	0.294	240.38	0.830
TC D0B21 DUCT B	887.5	0.572	298.50	1.031
TC D0D21 DUCT D	861.8	0.463	272.85	0.943
TC D0F21 DUCT F	867.0	0.605	278.06	0.961
TC D0B23 DUCT B	895.4	0.496	306.39	1.059
TC D0D23 DUCT D	874.1	1.100	285.12	0.985
TC D0F23 DUCT F	880.8	0.614	291.83	1.008

RESULTS FOR THERMOCOUPLES IN CHANNEL EXITS
FFM SERIES 2 TEST 11 RUN 101 DONE ON 32872 1416

DESCRIPTION	TEMP DEG F	STD DEV	RISE AB INLET T	NORMALIZED TEMP
TC EC03 EXIT CH 3	878.3	0.355	289.30	1.000
TC EC16 EXIT CH 16	874.8	0.448	285.79	0.987
TC EC17 EXIT CH 17	875.4	0.463	286.43	0.990
TC EC34 EXIT CH 34	874.8	0.860	285.81	0.987
TC EC35 EXIT CH 35	875.3	0.439	286.30	0.989
TC EC36 EXIT CH 36	876.0	0.471	287.01	0.992
TC EC06 EXIT CH 6	889.2	0.700	300.24	1.037
TC EC08 EXIT CH 8	891.6	0.498	302.66	1.046
TC EC27 EXIT CH 27	885.1	0.557	296.14	1.023
TC EA36 EXIT ANN EF	875.3	0.584	286.30	0.989
TC EA27 EXIT ANN BC	883.9	0.586	294.88	1.019
TC EA28 EXIT ANN C	879.1	0.570	290.14	1.002

RESULTS FOR THERMOCOUPLES INSIDE HEATERS
FFM SERIES 2 TEST 11 RUN 101 DONE ON 32872 1416

DESCRIPTION	TEMP DEG F	STD DEV	RISE AB INLET T	NORMALIZED TEMP
TC R0118AB HTR 1 INT	845.8	0.222	256.82	0.887
TC R0219AB HTR 2 INT	878.4	0.954	289.45	1.000
TC R0418AB HTR 4 INT	840.3	0.413	251.35	0.868
TC R0518AB HTR 5 INT	834.5	0.510	245.52	0.848
TC R1019AB HEATER 10	839.8	16.688	250.84	0.867
TC R1218AB HEATER 12	803.1	0.619	214.16	0.740
TC R1318DE HEATER 13	807.2	0.448	218.26	0.754
TC R1418AB HEATER 14	812.0	0.485	223.00	0.770
TC R1518AB HEATER 15	835.6	2.444	246.67	0.852
TC R1618AB HEATER 16	838.6	0.525	249.64	0.862
TC R1718AB HEATER 17	847.6	0.219	258.61	0.893
TC R1817AB HEATER 18	848.2	0.477	259.24	0.896
TC R0118BC HEATER 1	843.3	0.234	254.31	0.879
TC R0118CD HEATER 1	843.7	0.258	254.68	0.880
TC R0118DE HEATER 1	846.3	0.182	257.34	0.889
TC R0219BC HEATER 2	873.7	2.698	284.74	0.984
TC R0418BC HEATER 4	837.1	0.252	248.12	0.857
TC R0418CD HEATER 4	836.5	0.438	247.54	0.855
TC R0418DE HEATER 4	831.3	0.401	242.31	0.837
TC R0518BC HEATER 5	834.2	0.222	245.18	0.847
TC R0518CD HEATER 5	839.7	0.285	250.75	0.866
TC R0718BC HEATER 7	856.2	1.224	267.20	0.923
TC R0718CD HEATER 7	856.6	0.234	267.65	0.925
TC R0718DE HEATER 7	860.9	0.449	271.89	0.939
TC R0818BC HEATER 8	854.8	0.120	265.82	0.918
TC R1019BC HEATER 10	836.7	3.969	247.74	0.856
TC R1718BC HEATER 17	849.5	0.285	260.55	0.900
TC R1918DE HEATER 19	865.9	0.443	276.95	0.957

OPERATING DATA FOR FFM SERIES 2 TEST 11 RUN 102
WHICH WAS DONE ON 32972 1101

DESCRIPTION	MEAN VALUE	STANDARD DEVIATION
HEATER 1 POWER KW	1.00	0.004
HEATER 8,18,19 POWER	5.88	0.013
HTR 12,13,14 POWER	1.69	0.011
HTR 2,7,9,17 POWER	5.08	0.007
HTR 4,5,11,15 POWER	3.18	0.016
HTR 3,6,10,16 POWER	3.99	0.009
TOTAL POWER	20.58	0.050
TEST SECT FLOW, GPM	2.02	0.027
TEST SECT INLET PR	8.57	0.066
TEST SECT OUTLET PR	6.14	0.051
TOTAL FLOW, GPM	9.28	0.218
PUMP OUTLET PR, PSI	7.18	0.053
PUMP SPEED, RPM	150.10	1.502
BLOWER SPEED, RPM	107.53	44.386
AIR FLOW (200 F) CFM	0.97	0.0
TC 313 TEST SECT IN	581.08	0.310
TC 317 TEST SECT OUT	839.19	0.735
TC 300 PUMP OUTLET	580.21	1.836
TC 318 RADIATOR IN	822.35	3.080
TC 334 RADIATOR OUT	590.72	8.110
TC 336 PUMP INLET	578.18	2.608
TC 332 RAD AIR IN	126.54	1.319
TC 331 RAD AIR OUT	186.90	2.650

HEAT BALANCE ON SODIUM FLOWING THROUGH BUNDLE
HEAT SUPPLIED BY DUMMY FUEL RODS = 71100.19 BTU/HR
HEAT ADDED TO SODIUM = 70764.25 BTU/HR
PERCENT HEAT BALANCE = 99.53

RESULTS FOR UNGROUNDED JUNCTION THERMOCOUPLES
FFM SERIES 2 TEST 11 RUN 102 DONE ON 32972 1101

DESCRIPTION	TEMP DEG F	STD DEV	RISE AB INLET T	NORMALIZED TEMP
TC 1504U CH 37	613.4	0.681	32.37	0.125
TC 1706U CH 21	668.9	0.435	87.78	0.338
TC 1807U CH 24	702.4	0.618	121.30	0.468
TC 1108U CH 31	654.9	0.607	73.87	0.285
TC 0409U CH 13	685.7	0.857	104.62	0.403
TC 0509U CH 3	691.6	0.883	110.56	0.426
TC 1009U CH 29	675.0	0.480	93.89	0.362
TC 1409U CH 17	660.7	0.580	79.59	0.307
TC 1609U CH 21	701.6	0.707	120.51	0.465
TC 1914U CH 24	763.5	0.640	182.47	0.704
TC 0815U CH 8	810.7	0.818	229.60	0.885
TC 1316U CH 35	755.9	0.622	174.84	0.674
TC 1516U CH 37	755.6	1.077	174.52	0.673
TC 0817U CH 9	831.9	1.194	250.86	0.967
TC 1217U CH 33	737.3	0.942	156.19	0.602
TC 1318U CH 34	735.9	0.844	154.84	0.597
TC 1718U CH 22	836.0	1.123	254.89	0.983
TC 1219U CH 32	761.9	0.637	180.81	0.697
TC 1819U CH 24	865.8	1.153	284.76	1.098
TC 1120U CH 31	781.1	1.147	200.01	0.771
TC 0421U CH 13	827.1	0.710	246.02	0.949
TC 0521U CH 3	838.6	0.897	257.56	0.993
TC 1021U CH 29	809.4	1.042	228.33	0.880
TC 1421U CH 17	809.0	0.888	227.90	0.879
TC 1621U CH 21	860.6	0.680	279.56	1.078

RESULTS FOR GROUNDED JUNCTION THERMOCOUPLES
FFM SERIES 2 TEST 11 RUN 102 DONE ON 32972 1101

DESCRIPTION	TEMP DEG F	STD DEV	RISE AB INLET T	NORMALIZED TEMP
TC 0118C CH 3	813.1	1.453	232.05	0.895
TC 0618D CH 4	818.0	1.237	236.96	0.914
TC 0618C CH 19	811.2	0.803	230.09	0.887
TC 0219A HEATER 2	851.8	1.049	270.76	1.044
TC 0219B CH 10	847.3	0.962	266.23	1.027
TC 0919A HTR 9 EXT	808.5	0.743	227.46	0.877
TC 0919B CH 29	793.8	1.231	212.71	0.820
TC 0718C CH 5	850.3	1.091	269.27	1.038
TC 0718D CH 6	845.4	2.114	264.28	1.019
TC 0319A HEATER 3	808.2	0.808	227.10	0.876
TC 0319B CH 12	802.4	0.829	221.30	0.853

RESULTS FOR DUCT WALL THERMOCOUPLES
FFM SERIES 2 TEST 11 RUN 102 DONE ON 32972 1101

DESCRIPTION	TEMP DEG F	STD DEV	RISE AB INLET T	NORMALIZED TEMP
TC DOB04 DUCT B	626.9	0.341	45.82	0.177
TC DOE04 DUCT E	602.5	0.607	21.47	0.083
TC DOF04 DUCT F	609.4	0.560	28.36	0.109
TC DOB08 DUCT B	675.3	0.615	94.19	0.363
TC DOD08 DUCT D	645.2	0.736	64.15	0.247
TC DOF08 DUCT F	652.1	0.570	71.03	0.274
TC DOB12 DUCT B	740.7	0.534	159.58	0.615
TC DOE12 DUCT E	681.5	0.776	100.47	0.387
TC DOF12 DUCT F	706.1	0.826	125.03	0.482
TC DOB16 DUCT B	795.6	0.667	214.56	0.827
TC DOD16 DUCT D	724.0	0.578	142.97	0.551
TC DOF16 DUCT F	752.5	0.637	171.44	0.661
TC DOD18 DUCT D	751.0	1.123	169.88	0.655
TC DOE18 DUCT E	754.0	0.763	172.92	0.667
TC DAB18 DUCT AB	817.2	0.934	236.15	0.911
TC DDE18 DUCT DE	752.1	0.898	171.07	0.660
TC DEF18 DUCT EF	763.0	0.740	181.92	0.701
TC DOF18 DUCT F	776.3	0.745	195.17	0.753
TC DFA18 DUCT FA	795.4	0.970	214.35	0.827
TC DOB21 DUCT B	837.7	0.874	256.58	0.989
TC DOD21 DUCT D	791.1	0.646	210.01	0.810
TC DOF21 DUCT F	821.8	0.825	240.73	0.928
TC DOB23 DUCT B	852.5	0.884	271.42	1.047
TC DOD23 DUCT D	804.7	0.805	223.60	0.862
TC DOF23 DUCT F	839.4	0.902	258.33	0.996

RESULTS FOR THERMOCOUPLES IN CHANNEL EXITS
FFM SERIES 2 TEST 11 RUN 102 DONE ON 32972 1101

DESCRIPTION	TEMP DEG F	STD DEV	RISE AB INLET T	NORMALIZED TEMP
TC EC03 EXIT CH 3	829.7	0.567	248.61	0.959
TC EC16 EXIT CH 16	814.1	0.744	233.07	0.899
TC EC17 EXIT CH 17	816.1	0.644	235.06	0.906
TC EC34 EXIT CH 34	809.5	0.576	228.47	0.881
TC EC35 EXIT CH 35	816.2	0.598	235.13	0.907
TC EC36 EXIT CH 36	820.3	0.650	239.22	0.922
TC EC06 EXIT CH 6	865.0	1.020	283.92	1.095
TC EC08 EXIT CH 8	857.1	1.402	276.03	1.064
TC EC27 EXIT CH 27	833.7	1.517	252.65	0.974
TC EA36 EXIT ANN EF	820.3	1.165	239.26	0.923
TC EA27 EXIT ANN BC	830.3	1.354	249.24	0.961
TC EA28 EXIT ANN C	822.8	1.638	241.71	0.932

RESULTS FOR THERMOCOUPLES INSIDE HEATERS
FFM SERIES 2 TEST 11 RUN 102 DONE ON 32972 1101

DESCRIPTION	TEMP DEG F	STD DEV	RISE AB INLET T	NORMALIZED TEMP
TC R0118AB HTR 1 INT	823.0	0.782	241.91	0.933
TC R0219AB HTR 2 INT	870.8	0.982	289.71	1.117
TC R0418AB HTR 4 INT	813.2	0.933	232.09	0.895
TC R0518AB HTR 5 INT	801.5	0.995	220.40	0.850
TC R1019AB HEATER 10	785.3	18.674	204.19	0.787
TC R1218AB HEATER 12	745.7	1.538	164.63	0.635
TC R1318DE HEATER 13	753.3	0.964	172.17	0.664
TC R1418AB HEATER 14	762.5	0.641	181.44	0.700
TC R1518AB HEATER 15	808.5	6.199	227.46	0.877
TC R1618AB HEATER 16	812.6	0.874	231.54	0.893
TC R1718AB HEATER 17	838.7	0.884	257.64	0.993
TC R1817AB HEATER 18	840.9	0.977	259.82	1.002
TC R0118BC HEATER 1	819.3	1.348	238.18	0.918
TC R0118CD HEATER 1	821.0	1.388	239.90	0.925
TC R0118DE HEATER 1	825.2	1.059	244.15	0.941
TC R0219BC HEATER 2	862.1	6.757	281.02	1.084
TC R0418BC HEATER 4	805.4	0.997	224.37	0.865
TC R0418CD HEATER 4	804.4	0.866	223.37	0.861
TC R0418DE HEATER 4	792.0	1.037	210.95	0.813
TC R0518BC HEATER 5	802.9	1.206	221.78	0.855
TC R0518CD HEATER 5	813.2	1.180	232.10	0.895
TC R0718BC HEATER 7	852.8	2.584	271.73	1.048
TC R0718CD HEATER 7	852.7	1.307	271.62	1.047
TC R0718DE HEATER 7	859.5	1.159	278.40	1.074
TC R0818BC HEATER 8	836.2	1.477	255.09	0.984
TC R1019BC HEATER 10	805.7	12.160	224.62	0.866
TC R1718BC HEATER 17	841.3	1.003	260.20	1.003
TC R1918DE HEATER 19	867.1	1.859	286.01	1.103

OPERATING DATA FOR FFM SERIES 2 TEST 11 RUN 102
WHICH WAS DONE ON 32972 1126

DESCRIPTION	MEAN VALUE	STANDARD DEVIATION
HEATER 1 POWER KW	1.00	0.005
HEATER 8,18,19 POWER	5.91	0.007
HTR 12,13,14 POWER	1.68	0.004
HTR 2,7,9,17 POWER	5.09	0.005
HTR 4,5,11,15 POWER	3.21	0.011
HTR 3,6,10,16 POWER	4.02	0.005
TOTAL POWER	20.71	0.0
TEST SECT FLOW, GPM	2.02	0.027
TEST SECT INLET PR	8.59	0.069
TEST SECT OUTLET PR	6.17	0.054
TOTAL FLOW, GPM	9.19	0.065
PUMP OUTLET PR, PSI	7.21	0.075
PUMP SPEED, RPM	149.60	1.231
BLOWER SPEED, RPM	75.41	0.559
AIR FLOW (200 F) CFM	0.97	0.005
TC 313 TEST SECT IN	596.84	0.149
TC 317 TEST SECT OUT	850.62	0.354
TC 300 PUMP OUTLET	603.25	0.171
TC 318 RADIATOR IN	837.90	0.330
TC 334 RADIATOR OUT	644.85	0.625
TC 336 PUMP INLET	607.33	0.248
TC 332 RAD AIR IN	138.95	0.207
TC 331 RAD AIR OUT	210.91	0.549

HEAT BALANCE ON SODIUM FLOWING THROUGH BUNDLE
HEAT SUPPLIED BY DUMMY FUEL RODS = 71407.50 BTU/HR
HEAT ADDED TO SODIUM = 69288.06 BTU/HR
PERCENT HEAT BALANCE = 97.03

RESULTS FOR UNGROUNDED JUNCTION THERMOCOUPLES
FFM SERIES 2 TEST 11 RUN 102 DONE ON 32972 1126

DESCRIPTION	TEMP DEG F	STD DEV	RISE AB INLET T	NORMALIZED TEMP
TC 1504U CH 37	626.9	0.450	30.04	0.115
TC 1706U CH 21	683.1	0.436	86.23	0.330
TC 1807U CH 24	716.8	0.268	119.91	0.458
TC 1108U CH 31	668.3	0.278	71.49	0.273
TC 0409U CH 13	699.8	0.297	102.97	0.394
TC 0509U CH 3	705.5	0.278	108.63	0.415
TC 1009U CH 29	688.6	0.397	91.75	0.351
TC 1409U CH 17	674.0	0.361	77.13	0.295
TC 1609U CH 21	715.3	0.258	118.45	0.453
TC 1914U CH 24	777.5	0.407	180.64	0.691
TC 0815U CH 8	825.9	0.639	229.02	0.876
TC 1316U CH 35	769.0	0.268	172.13	0.658
TC 1516U CH 37	768.7	0.479	171.89	0.657
TC 0817U CH 9	846.5	0.530	249.67	0.955
TC 1217U CH 33	749.6	0.225	152.77	0.584
TC 1318U CH 34	748.7	0.509	151.83	0.581
TC 1718U CH 22	849.7	0.376	252.86	0.967
TC 1219U CH 32	774.8	0.280	177.98	0.681
TC 1819U CH 24	880.6	1.150	283.77	1.085
TC 1120U CH 31	794.6	0.709	197.74	0.756
TC 0421U CH 13	841.6	0.815	244.73	0.936
TC 0521U CH 3	853.0	0.674	256.21	0.980
TC 1021U CH 29	822.3	0.426	225.45	0.862
TC 1421U CH 17	822.7	0.610	225.89	0.864
TC 1621U CH 21	875.1	0.758	278.27	1.064

RESULTS FOR GROUNDED JUNCTION THERMOCOUPLES
FFM SERIES 2 TEST 11 RUN 102 DONE ON 32972 1126

DESCRIPTION	TEMP DEG F	STD DEV	RISE AB INLET T	NORMALIZED TEMP
TC 0118C CH 3	827.6	1.993	230.72	0.882
TC 0618D CH 4	832.5	0.261	235.69	0.901
TC 0618C CH 19	826.4	0.872	229.54	0.878
TC 0219A HEATER 2	867.7	0.703	270.86	1.036
TC 0219B CH 10	861.4	0.638	264.59	1.012
TC 0919A HTR 9 EXT	822.7	0.567	225.89	0.864
TC 0919B CH 29	807.6	0.799	210.73	0.806
TC 0718C CH 5	864.5	0.749	267.64	1.023
TC 0718D CH 6	857.6	1.637	260.78	0.997
TC 0319A HEATER 3	822.9	0.527	226.09	0.864
TC 0319B CH 12	816.9	0.687	220.05	0.841

RESULTS FOR DUCT WALL THERMOCOUPLES
FFM SERIES 2 TEST 11 RUN 102 DONE ON 32972 1126

DESCRIPTION	TEMP DEG F	STD DEV	RISE AB INLET T	NORMALIZED TEMP
TC DOB04 DUCT B	640.6	0.473	43.78	0.167
TC DOE04 DUCT E	615.6	0.202	18.80	0.072
TC DOF04 DUCT F	622.5	0.298	25.64	0.098
TC DOB08 DUCT B	688.5	0.354	91.71	0.351
TC DOD08 DUCT D	658.1	0.155	61.29	0.234
TC DOF08 DUCT F	665.4	0.155	68.55	0.262
TC DOB12 DUCT B	754.7	0.524	157.82	0.603
TC DOE12 DUCT E	693.7	0.290	96.82	0.370
TC DOF12 DUCT F	719.7	0.565	122.90	0.470
TC DOB16 DUCT B	809.2	0.525	212.33	0.812
TC DOD16 DUCT D	736.4	0.397	139.53	0.533
TC DOF16 DUCT F	765.7	0.459	168.83	0.646
TC DOD18 DUCT D	763.5	0.215	166.71	0.637
TC DOE18 DUCT E	766.4	0.388	169.54	0.648
TC DAB18 DUCT AB	830.3	0.363	233.42	0.892
TC DDE18 DUCT DE	764.0	0.248	167.15	0.639
TC DEF18 DUCT EF	775.3	0.363	178.50	0.682
TC DOF18 DUCT F	789.4	0.655	192.58	0.736
TC DFA18 DUCT FA	808.1	0.465	211.26	0.808
TC DOB21 DUCT B	851.3	0.952	254.51	0.973
TC DOD21 DUCT D	804.0	0.524	207.19	0.792
TC DOF21 DUCT F	834.9	0.550	238.03	0.910
TC DOB23 DUCT B	866.1	0.769	269.27	1.030
TC DOD23 DUCT D	816.2	0.674	219.36	0.839
TC DOF23 DUCT F	852.0	0.280	255.13	0.975

RESULTS FOR THERMOCOUPLES IN CHANNEL EXITS
FFM SERIES 2 TEST 11 RUN 102 DONE ON 32972 1126

DESCRIPTION	TEMP DEG F	STD DEV	RISE AB INLET T	NORMALIZED TEMP
TC EC03 EXIT CH 3	843.6	0.645	246.79	0.944
TC EC16 EXIT CH 16	827.8	0.462	230.95	0.883
TC EC17 EXIT CH 17	829.6	0.660	232.73	0.890
TC EC34 EXIT CH 34	823.2	0.673	226.37	0.866
TC EC35 EXIT CH 35	829.2	0.762	232.37	0.888
TC EC36 EXIT CH 36	833.7	0.880	236.85	0.906
TC EC06 EXIT CH 6	879.0	0.924	282.21	1.079
TC EC08 EXIT CH 8	870.8	0.989	273.98	1.048
TC EC27 EXIT CH 27	847.5	1.224	250.65	0.958
TC EA36 EXIT ANN EF	832.9	1.125	236.10	0.903
TC EA27 EXIT ANN BC	843.3	1.114	246.47	0.942
TC EA28 EXIT ANN C	835.6	1.045	238.79	0.913

RESULTS FOR THERMOCOUPLES INSIDE HEATERS
FFM SERIES 2 TEST 11 RUN 102 DONE ON 32972 1126

DESCRIPTION	TEMP DEG F	STD DEV	RISE AB INLET T	NORMALIZED TEMP
TC R0118AB HTR 1 INT	837.2	0.885	240.38	0.919
TC R0219AB HTR 2 INT	885.4	0.881	288.56	1.103
TC R0418AB HTR 4 INT	826.5	0.951	229.71	0.878
TC R0518AB HTR 5 INT	816.5	0.960	219.69	0.840
TC R1019AB HEATER 10	813.4	28.257	216.59	0.828
TC R1218AB HEATER 12	757.7	0.614	160.85	0.615
TC R1318DE HEATER 13	766.5	0.372	169.71	0.649
TC R1418AB HEATER 14	775.8	0.560	178.99	0.684
TC R1518AB HEATER 15	821.5	5.606	224.66	0.859
TC R1618AB HEATER 16	826.4	0.832	229.57	0.878
TC R1718AB HEATER 17	852.4	0.420	255.59	0.977
TC R1817AB HEATER 18	855.4	0.477	258.56	0.989
TC R0118BC HEATER 1	833.5	1.092	236.70	0.905
TC R0118CD HEATER 1	834.7	1.245	237.89	0.910
TC R0118DE HEATER 1	839.1	1.084	242.26	0.926
TC R0219BC HEATER 2	877.9	3.187	281.06	1.075
TC R0418BC HEATER 4	819.6	1.450	222.81	0.852
TC R0418CD HEATER 4	818.3	1.298	221.48	0.847
TC R0418DE HEATER 4	806.3	1.159	209.49	0.801
TC R0518BC HEATER 5	816.7	0.942	219.87	0.841
TC R0518CD HEATER 5	826.9	1.304	230.09	0.880
TC R0718BC HEATER 7	865.3	1.551	268.41	1.026
TC R0718CD HEATER 7	865.3	0.623	268.43	1.026
TC R0718DE HEATER 7	872.1	0.871	275.22	1.052
TC R0818BC HEATER 8	849.3	0.794	252.46	0.965
TC R1019BC HEATER 10	819.6	6.194	222.81	0.852
TC R1718BC HEATER 17	855.1	1.214	258.24	0.987
TC R1918DE HEATER 19	880.7	0.186	283.87	1.085

OPERATING DATA FOR FFM SERIES 2 TEST 11 RUN 103
WHICH WAS DONE ON 33072 959

DESCRIPTION	MEAN VALUE	STANDARD DEVIATION
HEATER 1 POWER KW	1.45	0.0
HEATER 8,18,19 POWER	8.64	0.004
HTR 12,13,14 POWER	2.88	0.032
HTR 2,7,9,17 POWER	7.88	0.004
HTR 4,5,11,15 POWER	4.81	0.014
HTR 3,6,10,16 POWER	6.18	0.009
TOTAL POWER	31.43	0.085
TEST SECT FLOW, GPM	3.05	0.058
TEST SECT INLET PR	8.74	0.129
TEST SECT OUTLET PR	6.15	0.040
TOTAL FLOW, GPM	10.57	0.186
PUMP OUTLET PR, PSI	8.13	0.055
PUMP SPEED, RPM	137.66	0.963
BLOWER SPEED, RPM	154.82	0.955
AIR FLOW (200 F) CFM	0.99	0.004
TC 313 TEST SECT IN	650.00	0.367
TC 317 TEST SECT OUT	905.02	0.060
TC 300 PUMP OUTLET	650.13	0.263
TC 318 RADIATOR IN	902.06	0.603
TC 334 RADIATOR OUT	660.10	0.972
TC 336 PUMP INLET	651.86	0.562
TC 332 RAD AIR IN	133.86	0.597
TC 331 RAD AIR OUT	198.58	0.828

HEAT BALANCE ON SODIUM FLOWING THROUGH BUNDLE
HEAT SUPPLIED BY DUMMY FUEL RODS = 108733.50 BTU/HR
HEAT ADDED TO SODIUM = 103663.44 BTU/HR
PERCENT HEAT BALANCE = 95.34

RESULTS FOR UNGROUNDED JUNCTION THERMOCOUPLES
FFM SERIES 2 TEST 11 RUN 103 DONE ON 33072 959

DESCRIPTION	TEMP DEG F	STD DEV	RISE AB INLET T	NORMALIZED TEMP
TC 1504U CH 37	679.5	0.421	29.48	0.110
TC 1706U CH 21	741.1	0.403	91.06	0.340
TC 1807U CH 24	777.8	0.499	127.85	0.478
TC 1108U CH 31	719.C	0.256	69.03	0.258
TC 0409U CH 13	759.5	0.276	109.49	0.409
TC 0509U CH 3	763.6	0.316	113.61	0.425
TC 1009U CH 29	736.3	0.360	86.34	0.323
TC 1409U CH 17	727.0	0.781	76.98	0.288
TC 1609U CH 21	769.7	0.475	119.66	0.447
TC 1914U CH 24	833.3	0.497	183.30	0.685
TC 0815U CH 8	892.7	0.486	242.66	0.907
TC 1316U CH 35	815.3	0.798	165.31	0.618
TC 1516U CH 37	820.1	0.329	170.09	0.636
TC 0817U CH 9	914.6	0.491	264.61	0.989
TC 1217U CH 33	794.7	1.185	144.69	0.541
TC 1318U CH 34	797.3	0.780	147.34	0.551
TC 1718U CH 22	916.0	0.713	266.03	0.995
TC 1219U CH 32	814.1	0.594	164.10	0.613
TC 1819U CH 24	948.5	0.465	298.53	1.116
TC 1120U CH 31	831.2	1.793	181.19	0.677
TC 0421U CH 13	893.8	0.953	243.80	0.911
TC 0521U CH 3	908.3	1.073	258.26	0.965
TC 1021U CH 29	857.2	0.500	207.22	0.775
TC 1421U CH 17	870.8	0.789	220.76	0.825
TC 1621U CH 21	937.4	0.746	287.43	1.075

RESULTS FOR GROUNDED JUNCTION THERMOCOUPLES
FFM SERIES 2 TEST 11 RUN 103 DONE ON 33072 959

DESCRIPTION	TEMP DEG F	STD DEV	RISE AB INLET T	NORMALIZED TEMP
TC 0118C CH 3	887.0	1.318	237.01	0.886
TC 0618D CH 4	895.4	0.465	245.41	0.917
TC 0618C CH 19	887.3	0.793	237.33	0.887
TC 0219A HEATER 2	937.6	1.091	287.59	1.075
TC 0219B CH 10	930.1	1.069	280.07	1.047
TC 0919A HTR 9 EXT	876.4	0.640	226.40	0.846
TC 0919B CH 29	853.9	0.513	203.92	0.762
TC 0718C CH 5	938.6	0.944	288.63	1.079
TC 0718D CH 6	931.3	0.866	281.27	1.052
TC 0319A HEATER 3	878.2	1.053	228.16	0.853
TC 0319B CH 12	870.1	0.709	220.07	0.823

RESULTS FOR DUCT WALL THERMOCOUPLES
FFM SERIES 2 TEST 11 RUN 103 DONE ON 33072 959

DESCRIPTION	TEMP DEG F	STD DEV	RISE AB INLET T	NORMALIZED TEMP
TC DOB04 DUCT B	692.0	0.215	41.96	0.157
TC DOE04 DUCT E	668.8	0.395	18.84	0.070
TC DOF04 DUCT F	674.7	0.477	24.71	0.092
TC DOB08 DUCT B	736.9	0.222	86.93	0.325
TC DOD08 DUCT D	704.5	0.367	54.50	0.204
TC DOF08 DUCT F	715.4	0.402	65.44	0.245
TC DOB12 DUCT B	805.0	0.421	154.97	0.579
TC DOE12 DUCT E	740.5	0.499	90.55	0.339
TC DOF12 DUCT F	770.9	0.452	120.87	0.452
TC DOB16 DUCT B	865.4	0.395	215.38	0.805
TC DOD16 DUCT D	775.9	0.352	125.95	0.471
TC DOF16 DUCT F	815.1	0.276	165.14	0.617
TC DOD18 DUCT D	801.2	0.337	151.17	0.565
TC DOE18 DUCT E	810.3	0.252	160.31	0.599
TC DAB18 DUCT AB	885.6	0.446	235.57	0.881
TC DDE18 DUCT DE	803.4	0.357	153.43	0.574
TC DEF18 DUCT EF	821.5	0.463	171.49	0.641
TC DOF18 DUCT F	838.8	0.110	188.83	0.706
TC DFA18 DUCT FA	860.5	0.352	210.52	0.787
TC DOB21 DUCT B	890.7	0.405	240.71	0.900
TC DOD21 DUCT D	839.9	0.196	189.92	0.710
TC DOF21 DUCT F	884.8	0.549	234.85	0.878
TC DOB23 DUCT B	908.4	0.362	258.43	0.966
TC DOD23 DUCT D	852.9	0.858	202.86	0.758
TC DOF23 DUCT F	905.3	0.261	255.30	0.954

RESULTS FOR THERMOCOUPLES IN CHANNEL EXITS
FFM SERIES 2 TEST 11 RUN 103 DONE ON 33072 959

DESCRIPTION	TEMP DEG F	STD DEV	RISE AB INLET T	NORMALIZED TEMP
TC EC03 EXIT CH 3	895.2	0.906	245.18	0.917
TC EC16 EXIT CH 16	873.1	0.545	223.15	0.834
TC EC17 EXIT CH 17	872.8	0.567	222.80	0.833
TC EC34 EXIT CH 34	861.9	0.571	211.95	0.792
TC EC35 EXIT CH 35	872.5	0.557	222.55	0.832
TC EC36 EXIT CH 36	877.2	0.514	227.19	0.849
TC EC06 EXIT CH 6	949.8	0.429	299.79	1.121
TC EC08 EXIT CH 8	926.4	0.470	276.41	1.033
TC EC27 EXIT CH 27	888.9	0.957	238.95	0.893
TC EA36 EXIT ANN EF	876.5	0.155	226.53	0.847
TC EA27 EXIT ANN BC	885.7	0.893	235.72	0.881
TC EA28 EXIT ANN C	876.6	1.471	226.63	0.847

RESULTS FOR THERMOCOUPLES INSIDE HEATERS
FFM SERIES 2 TEST 11 RUN 103 DONE ON 33072 959

DESCRIPTION	TEMP DEG F	STD DEV	RISE AB INLET T	NORMALIZED TEMP
TC R0118AB HTR 1 INT	903.3	1.014	253.27	0.947
TC R0219AB HTR 2 INT	962.6	0.943	312.65	1.169
TC R0418AB HTR 4 INT	887.3	0.764	237.31	0.887
TC R0518AB HTR 5 INT	874.0	1.323	224.04	0.838
TC R1019AB HEATER 10	889.8	29.745	239.85	0.897
TC R1218AB HEATER 12	803.5	0.758	153.52	0.574
TC R1318DE HEATER 13	816.1	0.874	166.12	0.621
TC R1418AB HEATER 14	825.8	0.669	175.84	0.657
TC R1518AB HEATER 15	884.8	9.280	234.75	0.878
TC R1618AB HEATER 16	885.9	0.584	235.90	0.882
TC R1718AB HEATER 17	924.0	0.333	274.02	1.024
TC R1817AB HEATER 18	920.8	0.155	270.83	1.012
TC R0118BC HEATER 1	898.7	0.714	248.71	0.930
TC R0118CD HEATER 1	900.4	0.674	250.44	0.936
TC R0118DE HEATER 1	905.6	0.635	255.63	0.956
TC R0219BC HEATER 2	954.6	4.633	304.56	1.139
TC R0418BC HEATER 4	879.6	0.355	229.58	0.858
TC R0418CD HEATER 4	878.2	0.616	228.21	0.853
TC R0418DE HEATER 4	861.9	0.940	211.95	0.792
TC R0518BC HEATER 5	877.2	0.626	227.17	0.849
TC R0518CD HEATER 5	889.8	0.443	239.82	0.897
TC R0718BC HEATER 7	942.0	1.418	292.05	1.092
TC R0718CD HEATER 7	943.6	1.099	293.60	1.098
TC R0718DE HEATER 7	950.8	0.535	300.80	1.125
TC R0818BC HEATER 8	919.9	0.989	269.93	1.009
TC R1019BC HEATER 10	875.8	14.402	225.75	0.844
TC R1718BC HEATER 17	926.9	1.093	276.94	1.035
TC R1918DE HEATER 19	962.9	0.430	312.92	1.170

OPERATING DATA FOR FFM SERIES 2 TEST 1 RUN 104
WHICH WAS DONE ON 33072 1401

DESCRIPTION	MEAN VALUE	STANDARD DEVIATION
HEATER 1 POWER KW	2.05	0.005
HEATER 8,18,19 POWER	11.24	0.013
HTR 12,13,14 POWER	3.76	0.076
HTR 2,7,9,17 POWER	10.00	0.019
HTR 4,5,11,15 POWER	6.30	0.022
HTR 3,6,10,16 POWER	8.01	0.008
TOTAL POWER	40.71	0.127
TEST SECT FLOW, GPM	4.09	0.035
TEST SECT INLET PR	9.01	0.093
TEST SECT OUTLET PR	6.17	0.046
TOTAL FLOW, GPM	11.31	0.114
PUMP OUTLET PR, PSI	8.10	0.026
PUMP SPEED, RPM	137.00	1.179
BLOWER SPEED, RPM	102.25	18.140
AIR FLOW (200 F) CFM	1.02	0.013
TC 313 TEST SECT IN	597.64	1.394
TC 317 TEST SECT OUT	847.24	0.320
TC 300 PUMP OUTLET	596.15	3.939
TC 318 RADIATOR IN	819.44	10.938
TC 334 RADIATOR OUT	597.94	6.047
TC 336 PUMP INLET	594.96	4.795
TC 332 RAD AIR IN	107.35	2.667
TC 331 RAD AIR OUT	302.08	7.564

HEAT BALANCE ON SODIUM FLOWING THROUGH BUNDLE
HEAT SUPPLIED BY DUMMY FUEL RODS = 141244.25 BTU/HR
HEAT ADDED TO SODIUM = 137942.75 BTU/HR
PERCENT HEAT BALANCE = 97.66

RESULTS FOR UNGROUNDED JUNCTION THERMOCOUPLES
FFM SERIES 2 TEST 1 RUN 104 DONE ON 33072 1401

DESCRIPTION	TEMP DEG F	STD DEV	RISE AB INLET T	NORMALIZED TEMP
TC 1504U CH 37	627.6	0.698	29.96	0.117
TC 1706U CH 21	687.4	1.141	89.78	0.351
TC 1807U CH 24	728.7	1.360	131.02	0.513
TC 1108U CH 31	663.1	0.590	65.47	0.256
TC 0409U CH 13	708.1	0.460	110.47	0.432
TC 0509U CH 3	711.3	0.947	113.71	0.445
TC 1009U CH 29	678.3	0.294	80.71	0.316
TC 1409U CH 17	671.9	0.693	74.24	0.290
TC 1609U CH 21	713.9	0.856	116.23	0.455
TC 1914U CH 24	776.2	0.811	178.60	0.699
TC 0815U CH 8	843.2	1.199	245.58	0.961
TC 1316U CH 35	753.9	1.037	156.26	0.611
TC 1516U CH 37	762.5	0.355	164.85	0.645
TC 0817U CH 9	864.3	1.310	266.69	1.043
TC 1217U CH 33	733.2	0.958	135.59	0.531
TC 1318U CH 34	738.0	0.834	140.34	0.549
TC 1718U CH 22	866.4	1.223	268.72	1.051
TC 1219U CH 32	750.8	0.752	153.21	0.599
TC 1819U CH 24	901.1	0.943	303.44	1.187
TC 1120U CH 31	766.0	1.565	168.38	0.659
TC 0421U CH 13	835.6	0.359	238.00	0.931
TC 0521U CH 3	850.5	0.470	252.90	0.990
TC 1021U CH 29	788.3	0.155	190.64	0.746
TC 1421U CH 17	811.0	0.845	213.33	0.835
TC 1621U CH 21	881.6	0.872	283.97	1.111

RESULTS FOR GROUNDED JUNCTION THERMOCOUPLES
FFM SERIES 2 TEST 1 RUN 104 DONE ON 33072 1401

DESCRIPTION	TEMP DEG F	STD DEV	RISE AB INLET T	NORMALIZED TEMP
TC 0118C CH 3	836.1	1.189	238.42	0.933
TC 0618D CH 4	845.4	0.662	247.81	0.970
TC 0618C CH 19	834.7	1.331	237.07	0.928
TC 0219A HEATER 2	889.7	0.335	292.03	1.143
TC 0219B CH 10	880.4	1.215	282.73	1.106
TC 0919A HTR 9 EXT	818.9	0.292	221.23	0.866
TC 0919B CH 29	791.1	0.427	193.48	0.757
TC 0718C CH 5	894.7	0.538	297.10	1.162
TC 0718D CH 6	885.0	1.846	287.32	1.124
TC 0319A HEATER 3	823.2	0.219	225.59	0.883
TC 0319B CH 12	813.3	0.388	215.70	0.844

RESULTS FOR DUCT WALL THERMOCOUPLES
FFM SERIES 2 TEST 1 RUN 104 DONE ON 33072 1401

DESCRIPTION	TEMP DEG F	STD DEV	RISE AB INLET T	NORMALIZED TEMP
TC DOB04 DUCT B	637.2	1.116	39.55	0.155
TC DOE04 DUCT E	616.8	0.719	19.12	0.075
TC DOF04 DUCT F	622.1	0.797	24.47	0.096
TC DOB08 DUCT B	678.1	0.645	80.42	0.315
TC DOD08 DUCT D	648.2	0.656	50.60	0.198
TC DOF08 DUCT F	660.4	0.612	62.77	0.246
TC DOB12 DUCT B	744.0	0.533	146.37	0.573
TC DOE12 DUCT E	681.9	0.612	84.23	0.330
TC DOF12 DUCT F	713.2	0.531	115.56	0.452
TC DOB16 DUCT B	805.9	0.956	208.26	0.815
TC DOD16 DUCT D	712.3	0.802	114.68	0.449
TC DOF16 DUCT F	756.7	0.355	159.09	0.622
TC DOD18 DUCT D	736.8	0.325	139.17	0.545
TC DOE18 DUCT E	748.2	0.664	150.53	0.589
TC DAB18 DUCT AB	823.3	0.721	225.64	0.883
TC DDE18 DUCT DE	740.0	0.789	142.37	0.557
TC DEF18 DUCT EF	761.0	0.463	163.40	0.639
TC DOF18 DUCT F	778.3	0.507	180.66	0.707
TC DFA18 DUCT FA	799.7	0.623	202.09	0.791
TC DOB21 DUCT B	821.8	0.594	224.17	0.877
TC DOD21 DUCT D	773.1	0.673	175.46	0.687
TC DOF21 DUCT F	822.0	0.828	224.36	0.878
TC DOB23 DUCT B	839.9	0.630	242.28	0.948
TC DOD23 DUCT D	784.1	1.100	186.49	0.730
TC DOF23 DUCT F	844.4	0.171	246.74	0.965

RESULTS FOR THERMOCOUPLES IN CHANNEL EXITS
FFM SERIES 2 TEST 1 RUN 104 DONE ON 33072 1401

DESCRIPTION	TEMP DEG F	STD DEV	RISE AB INLET T	NORMALIZED TEMP
TC EC03 EXIT CH 3	837.9	0.987	240.25	0.940
TC EC16 EXIT CH 16	810.7	0.738	213.08	0.834
TC EC17 EXIT CH 17	808.5	0.561	210.91	0.825
TC EC34 EXIT CH 34	795.0	0.479	197.39	0.772
TC EC35 EXIT CH 35	808.3	0.429	210.62	0.824
TC EC36 EXIT CH 36	813.5	0.288	215.84	0.845
TC EC06 EXIT CH 6	905.8	0.736	308.19	1.206
TC EC08 EXIT CH 8	869.1	1.023	271.46	1.062
TC EC27 EXIT CH 27	823.2	0.547	225.55	0.883
TC EA36 EXIT ANN EF	811.2	0.435	213.56	0.836
TC EA27 EXIT ANN BC	821.7	1.011	224.04	0.877
TC EA28 EXIT ANN C	812.9	0.793	215.31	0.842

RESULTS FOR THERMOCOUPLES INSIDE HEATERS
FFM SERIES 2 TEST 1 RUN 104 DONE ON 33072 1401

DESCRIPTION	TEMP DEG F	STD DEV	RISE AB INLET T	NORMALIZED TEMP
TC R0118AB HTR 1 INT	859.2	1.014	261.55	1.023
TC R0219AB HTR 2 INT	920.4	1.273	322.81	1.263
TC R0418AB HTR 4 INT	838.2	2.757	240.54	0.941
TC R0518AB HTR 5 INT	822.6	0.749	224.99	0.880
TC R1019AB HEATER 10	816.9	42.925	219.28	0.858
TC R1218AB HEATER 12	742.2	1.445	144.58	0.566
TC R1318DE HEATER 13	759.9	0.835	162.23	0.635
TC R1418AB HEATER 14	770.3	0.741	172.61	0.675
TC R1518AB HEATER 15	824.8	12.238	227.21	0.889
TC R1618AB HEATER 16	831.1	0.193	233.45	0.913
TC R1718AB HEATER 17	876.6	0.772	278.95	1.091
TC R1817AB HEATER 18	871.4	1.031	273.78	1.071
TC R0118BC HEATER 1	854.2	0.884	256.60	1.004
TC R0118CD HEATER 1	857.5	0.832	259.86	1.017
TC R0118DE HEATER 1	861.5	1.073	263.88	1.032
TC R0219BC HEATER 2	915.1	2.230	317.46	1.242
TC R0418BC HEATER 4	830.9	0.457	233.31	0.913
TC R0418CD HEATER 4	828.8	0.809	231.18	0.905
TC R0418DE HEATER 4	810.9	0.718	213.29	0.835
TC R0518BC HEATER 5	827.0	0.758	229.39	0.898
TC R0518CD HEATER 5	842.2	1.453	244.57	0.957
TC R0718BC HEATER 7	901.2	1.980	303.55	1.188
TC R0718CD HEATER 7	901.5	0.958	303.87	1.189
TC R0718DE HEATER 7	909.1	0.792	311.47	1.219
TC R0818BC HEATER 8	875.1	0.454	277.50	1.086
TC R1019BC HEATER 10	798.4	24.670	200.74	0.785
TC R1718BC HEATER 17	879.9	0.702	282.26	1.104
TC R1918DE HEATER 19	921.3	1.285	323.64	1.266

OPERATING DATA FOR FFM SERIES 2 TEST 11 RUN 201
WHICH WAS DONE ON 32872 1524

DESCRIPTION	MEAN VALUE	STANDARD DEVIATION
HEATER 1 POWER KW	0.50	0.0
HEATER 8,18,19 POWER	1.04	0.011
HTR 12,13,14 POWER	2.92	0.005
HTR 2,7,9,17 POWER	1.57	0.015
HTR 4,5,11,15 POWER	2.51	0.022
HTR 3,6,10,16 POWER	1.97	0.005
TOTAL POWER	10.40	0.033
TEST SECT FLOW, GPM	0.94	0.030
TEST SECT INLET PR	8.62	0.089
TEST SECT OUTLET PR	6.18	0.063
TOTAL FLOW, GPM	9.03	0.232
PUMP OUTLET PR, PSI	7.41	0.046
PUMP SPEED, RPM	174.96	1.282
BLOWER SPEED, RPM	24.94	2.404
AIR FLOW (200 F) CFM	0.96	0.004
TC 313 TEST SECT IN	609.42	0.275
TC 317 TEST SECT OUT	902.12	0.810
TC 300 PUMP OUTLET	610.53	0.059
TC 318 RADIATOR IN	762.10	1.066
TC 334 RADIATOR OUT	615.92	0.130
TC 336 PUMP INLET	611.44	0.324
TC 332 RAD AIR IN	131.41	0.038
TC 331 RAD AIR OUT	204.20	1.430

HEAT BALANCE ON SODIUM FLOWING THROUGH BUNDLE
HEAT SUPPLIED BY DUMMY FUEL RODS = 35891.64 BTU/HR
HEAT ADDED TO SODIUM = 37058.73 BTU/HR
PERCENT HEAT BALANCE = 103.25

RESULTS FOR UNGROUNDED JUNCTION THERMOCOUPLES
FFM SERIES 2 TEST 11 RUN 201 DONE ON 32872 1524

DESCRIPTION	TEMP DEG F	STD DEV	RISE AB INLET T	NORMALIZED TEMP
TC 1504U CH 37	668.7	0.717	59.26	0.209
TC 1706U CH 21	683.0	0.575	73.54	0.259
TC 1807U CH 24	687.5	0.545	78.04	0.275
TC 1108U CH 31	730.6	0.560	121.22	0.428
TC 0409U CH 13	762.9	1.784	153.48	0.541
TC 0509U CH 3	762.4	2.246	153.00	0.540
TC 1009U CH 29	730.3	0.488	120.84	0.426
TC 1409U CH 17	761.1	0.947	151.68	0.535
TC 1609U CH 21	729.4	0.308	120.01	0.423
TC 1914U CH 24	753.1	0.867	143.67	0.507
TC 0815U CH 8	798.8	1.107	189.37	0.668
TC 1316U CH 35	891.2	1.334	281.81	0.994
TC 1516U CH 37	839.3	1.264	229.90	0.811
TC 0817U CH 9	828.6	1.217	219.20	0.773
TC 1217U CH 33	870.3	1.494	260.91	0.920
TC 1318U CH 34	859.9	1.455	250.51	0.884
TC 1718U CH 22	852.9	0.852	243.47	0.859
TC 1219U CH 32	895.9	1.263	286.53	1.011
TC 1819U CH 24	858.3	1.142	248.92	0.878
TC 1120U CH 31	892.7	0.407	283.30	0.999
TC 0421U CH 13	922.5	0.949	313.06	1.104
TC 0521U CH 3	923.0	1.337	313.61	1.106
TC 1021U CH 29	897.5	1.000	288.06	1.016
TC 1421U CH 17	929.9	0.699	320.53	1.131
TC 1621U CH 21	900.9	0.554	291.46	1.028

RESULTS FOR GROUNDED JUNCTION THERMOCOUPLES
FFM SERIES 2 TEST 11 RUN 201 DONE ON 32872 1524

DESCRIPTION	TEMP DEG F	STD DEV	RISE AB INLET T	NORMALIZED TEMP
TC 0118C CH 3	882.9	1.851	273.53	0.965
TC 0618D CH 4	876.0	1.622	266.61	0.940
TC 0618C CH 19	875.4	1.345	266.02	0.938
TC 0219A HEATER 2	873.1	1.775	263.72	0.930
TC 0219B CH 10	872.0	1.805	262.56	0.926
TC 0919A HTR 9 EXT	871.8	1.140	262.42	0.926
TC 0919B CH 29	867.9	1.212	258.47	0.912
TC 0718C CH 5	857.1	1.712	247.72	0.874
TC 0718D CH 6	861.6	2.577	252.20	0.890
TC 0319A HEATER 3	886.7	0.893	277.27	0.978
TC 0319B CH 12	884.9	1.185	275.50	0.972

RESULTS FOR DUCT WALL THERMOCOUPLES
FFM SERIES 2 TEST 11 RUN 201 DONE ON 32872 1524

DESCRIPTION	TEMP DEG F	STD DEV	RISE AB INLET T	NORMALIZED TEMP
TC DOB04 DUCT B	639.9	0.587	30.46	0.107
TC DOE04 DUCT E	668.7	0.627	59.29	0.209
TC DOF04 DUCT F	656.2	0.352	46.82	0.165
TC DOB08 DUCT B	690.6	0.546	81.22	0.287
TC DOD08 DUCT D	717.7	0.325	108.28	0.382
TC DOF08 DUCT F	710.0	0.475	100.57	0.355
TC DOB12 DUCT B	750.1	0.664	140.65	0.496
TC DOE12 DUCT E	783.3	1.079	173.89	0.613
TC DOF12 DUCT F	765.1	0.493	155.66	0.549
TC DOB16 DUCT B	807.9	0.922	198.50	0.700
TC DOD16 DUCT D	829.1	0.639	219.67	0.775
TC DOF16 DUCT F	830.4	0.997	220.95	0.779
TC DOD18 DUCT D	858.9	0.976	249.49	0.880
TC DOE18 DUCT E	876.1	1.052	266.65	0.941
TC DAB18 DUCT AB	840.0	0.976	230.59	0.813
TC DDE18 DUCT DE	866.9	0.730	257.51	0.908
TC DEF18 DUCT EF	871.0	1.073	261.58	0.923
TC DOF18 DUCT F	857.6	0.696	248.16	0.875
TC DFA18 DUCT FA	848.5	0.928	239.12	0.844
TC DOB21 DUCT B	878.3	1.435	268.93	0.949
TC DOD21 DUCT D	901.3	1.026	291.93	1.030
TC DOF21 DUCT F	900.5	0.819	291.08	1.027
TC DOB23 DUCT B	892.6	1.240	283.15	0.999
TC DOD23 DUCT D	912.4	1.306	302.94	1.069
TC DOF23 DUCT F	908.9	1.002	299.49	1.056

RESULTS FOR THERMOCOUPLES IN CHANNEL EXITS
FFM SERIES 2 TEST 11 RUN 201 DONE ON 32872 1524

DESCRIPTION	TEMP DEG F	STD DEV	RISE AB INLET T	NORMALIZED TEMP
TC EC03 EXIT CH 3	910.6	1.174	301.18	1.062
TC EC16 EXIT CH 16	915.1	1.104	305.70	1.078
TC EC17 EXIT CH 17	914.0	0.926	304.63	1.075
TC EC34 EXIT CH 34	914.6	0.875	305.19	1.077
TC EC35 EXIT CH 35	912.7	1.138	303.26	1.070
TC EC36 EXIT CH 36	908.3	1.200	298.83	1.054
TC EC06 EXIT CH 6	901.4	1.207	291.94	1.030
TC EC08 EXIT CH 8	896.5	1.117	287.05	1.013
TC EC27 EXIT CH 27	895.5	1.254	286.12	1.009
TC EA36 EXIT ANN EF	906.4	1.076	296.96	1.048
TC EA27 EXIT ANN BC	896.8	1.056	287.37	1.014
TC EA28 EXIT ANN C	897.2	0.907	287.74	1.015

RESULTS FOR THERMOCOUPLES INSIDE HEATERS
FFM SERIES 2 TEST 11 RUN 201 DONE ON 32872 1524

DESCRIPTION	TEMP DEG F	STD DEV	RISE AB INLET T	NORMALIZED TEMP
TC R0118AB HTR 1 INT	874.9	1.733	265.48	0.936
TC R0219AB HTR 2 INT	872.3	2.313	262.85	0.927
TC R0418AB HTR 4 INT	883.5	1.989	274.09	0.967
TC R0518AB HTR 5 INT	883.5	1.497	274.11	0.967
TC R1019AB HEATER 10	864.2	10.083	254.77	0.899
TC R1218AB HEATER 12	875.2	1.704	265.75	0.937
TC R1318DE HEATER 13	888.5	1.359	279.06	0.984
TC R1418AB HEATER 14	884.4	1.161	274.95	0.970
TC R1518AB HEATER 15	874.0	5.086	264.55	0.933
TC R1618AB HEATER 16	856.5	0.673	247.12	0.872
TC R1718AB HEATER 17	846.0	1.014	236.62	0.835
TC R1817AB HEATER 18	825.9	0.682	216.47	0.764
TC R0118BC HEATER 1	877.0	1.330	267.54	0.944
TC R0118CD HEATER 1	876.9	1.133	267.47	0.944
TC R0118DE HEATER 1	875.3	0.976	265.91	0.938
TC R0219BC HEATER 2	875.9	3.205	266.44	0.940
TC R0418BC HEATER 4	884.7	2.116	275.26	0.971
TC R0418CD HEATER 4	884.9	1.605	275.52	0.972
TC R0418DE HEATER 4	888.8	1.692	279.33	0.985
TC R0518BC HEATER 5	882.0	1.804	272.62	0.962
TC R0518CD HEATER 5	877.9	1.567	268.53	0.947
TC R0718BC HEATER 7	847.2	0.686	237.76	0.839
TC R0718CD HEATER 7	847.5	0.639	238.13	0.840
TC R0718DE HEATER 7	847.1	0.761	237.68	0.838
TC R0818BC HEATER 8	837.4	1.313	227.95	0.804
TC R1019BC HEATER 10	857.8	5.500	248.39	0.876
TC R1718BC HEATER 17	847.0	0.318	237.63	0.838
TC R1918DE HEATER 19	840.8	0.843	231.38	0.816

OPERATING DATA FOR FFM SERIES 2 TEST 11 RUN 202
WHICH WAS DONE ON 32972 1242

DESCRIPTION	MEAN VALUE	STANDARD DEVIATION
HEATER 1 POWER KW	0.99	0.005
HEATER 8,18,19 POWER	1.72	0.016
HTR 12,13,14 POWER	5.86	0.011
HTR 2,7,9,17 POWER	3.18	0.005
HTR 4,5,11,15 POWER	5.25	0.008
HTR 3,6,10,16 POWER	3.91	0.014
TOTAL POWER	20.55	0.033
TEST SECT FLOW, GPM	2.12	0.034
TEST SECT INLET PR	8.53	0.098
TEST SECT OUTLET PR	6.15	0.019
TOTAL FLOW, GPM	9.31	0.241
PUMP OUTLET PR, PSI	7.18	0.025
PUMP SPEED, RPM	151.98	0.522
BLOWER SPEED, RPM	127.72	0.164
AIR FLOW (200 F) CFM	0.98	0.008
TC 313 TEST SECT IN	615.79	0.329
TC 317 TEST SECT OUT	872.12	0.758
TC 300 PUMP OUTLET	615.42	0.261
TC 318 RADIATOR IN	854.81	0.612
TC 334 RADIATOR OUT	626.53	1.963
TC 336 PUMP INLET	614.02	0.654
TC 332 RAD AIR IN	132.44	0.332
TC 331 RAD AIR OUT	198.15	0.602

HEAT BALANCE ON SODIUM FLOWING THROUGH BUNDLE
HEAT SUPPLIED BY DUMMY FUEL RODS = 71407.50 BTU/HR
HEAT ADDED TO SODIUM = 73062.88 BTU/HR
PERCENT HEAT BALANCE = 102.32

RESULTS FOR UNGROUNDED JUNCTION THERMOCOUPLES
FFM SERIES 2 TEST 11 RUN 202 DONE ON 32972 1242

DESCRIPTION	TEMP DEG F	STD DEV	RISE AB INLET T	NORMALIZED TEMP
TC 1504U CH 37	666.3	0.222	50.54	0.202
TC 1706U CH 21	680.0	0.150	64.17	0.256
TC 1807U CH 24	675.3	0.491	59.54	0.238
TC 1108U CH 31	729.8	0.367	114.03	0.455
TC 0409U CH 13	773.2	0.294	157.43	0.628
TC 0509U CH 3	771.0	0.303	155.18	0.619
TC 1009U CH 29	719.3	0.273	103.53	0.413
TC 1409U CH 17	766.7	0.612	150.91	0.602
TC 1609U CH 21	716.8	0.448	101.06	0.403
TC 1914U CH 24	716.2	0.114	100.37	0.401
TC 0815U CH 8	762.2	0.130	146.37	0.584
TC 1316U CH 35	883.2	0.602	267.45	1.068
TC 1516U CH 37	804.8	0.670	189.06	0.755
TC 0817U CH 9	789.8	0.275	174.00	0.695
TC 1217U CH 33	862.1	0.544	246.33	0.983
TC 1318U CH 34	844.3	0.754	228.49	0.912
TC 1718U CH 22	812.1	0.639	196.31	0.784
TC 1219U CH 32	888.6	0.396	272.85	1.089
TC 1819U CH 24	803.7	1.184	187.94	0.750
TC 1120U CH 31	880.7	1.420	264.89	1.057
TC 0421U CH 13	914.7	0.627	298.88	1.193
TC 0521U CH 3	902.6	0.817	286.79	1.145
TC 1021U CH 29	867.8	0.780	251.98	1.006
TC 1421U CH 17	918.0	0.691	302.23	1.206
TC 1621U CH 21	846.9	0.626	231.09	0.922

RESULTS FOR GROUNDED JUNCTION THERMOCOUPLES
FFM SERIES 2 TEST 11 RUN 202 DONE ON 32972 1242

DESCRIPTION	TEMP DEG F	STD DEV	RISE AB INLET T	NORMALIZED TEMP
TC 0118C CH 3	879.1	1.042	263.29	1.051
TC 0618D CH 4	862.3	0.535	246.55	0.984
TC 0618C CH 19	857.5	0.574	241.72	0.965
TC 0219A HEATER 2	841.0	1.139	225.17	0.899
TC 0219B CH 10	840.0	0.747	224.23	0.895
TC 0919A HTR 9 EXT	847.8	0.674	232.05	0.926
TC 0919B CH 29	841.8	0.809	226.02	0.902
TC 0718C CH 5	827.0	1.325	211.17	0.843
TC 0718D CH 6	832.5	0.803	216.73	0.865
TC 0319A HEATER 3	875.6	0.596	259.81	1.037
TC 0319B CH 12	872.6	0.599	256.80	1.025

RESULTS FOR DUCT WALL THERMOCOUPLES
FFM SERIES 2 TEST 11 RUN 202 DONE ON 32972 1242

DESCRIPTION	TEMP DEG F	STD DEV	RISE AB INLET T	NORMALIZED TEMP
TC DOB04 DUCT B	635.8	0.547	19.96	0.080
TC DOE04 DUCT E	668.0	0.193	52.17	0.208
TC DOF04 DUCT F	654.5	0.344	38.74	0.155
TC DOB08 DUCT B	671.3	0.434	55.49	0.221
TC DOD08 DUCT D	713.2	0.743	97.44	0.389
TC DOF08 DUCT F	697.1	0.483	81.36	0.325
TC DOB12 DUCT B	716.2	0.247	100.37	0.401
TC DOE12 DUCT E	768.4	0.439	152.59	0.609
TC DOF12 DUCT F	731.2	0.418	115.45	0.461
TC DOB16 DUCT B	761.1	0.206	145.27	0.580
TC DOD16 DUCT D	815.2	0.601	199.37	0.796
TC DOF16 DUCT F	792.4	0.477	176.61	0.705
TC DOD18 DUCT D	841.0	0.585	225.25	0.899
TC DOE18 DUCT E	858.6	0.326	242.77	0.969
TC DAB18 DUCT AB	789.4	0.581	173.59	0.693
TC DDE18 DUCT DE	848.6	0.448	232.84	0.929
TC DEF18 DUCT EF	845.4	0.585	229.63	0.917
TC DOF18 DUCT F	820.9	0.590	205.15	0.819
TC DFA18 DUCT FA	803.5	0.699	187.67	0.749
TC DOB21 DUCT B	821.8	0.551	206.03	0.822
TC DOD21 DUCT D	879.2	0.543	263.40	1.051
TC DOF21 DUCT F	857.0	0.623	241.20	0.963
TC DOB23 DUCT B	835.4	0.614	219.61	0.877
TC DOD23 DUCT D	892.0	0.584	276.25	1.103
TC DOF23 DUCT F	864.4	0.605	248.58	0.992

RESULTS FOR THERMOCOUPLES IN CHANNEL EXITS
FFM SERIES 2 TEST 11 RUN 202 DONE ON 32972 1242

DESCRIPTION	TEMP DEG F	STD DEV	RISE AB INLET T	NORMALIZED TEMP
TC EC03 EXIT CH 3	887.0	0.543	271.20	1.083
TC EC16 EXIT CH 16	897.0	0.679	281.19	1.122
TC EC17 EXIT CH 17	888.2	0.320	272.42	1.087
TC EC34 EXIT CH 34	894.2	0.573	278.43	1.111
TC EC35 EXIT CH 35	882.7	0.671	266.95	1.066
TC EC36 EXIT CH 36	868.3	1.047	252.48	1.008
TC EC06 EXIT CH 6	855.6	0.959	239.81	0.957
TC EC08 EXIT CH 8	343.3	0.964	227.54	0.908
TC EC27 EXIT CH 27	845.0	1.055	229.21	0.915
TC EA36 EXIT ANN EF	864.7	0.745	248.91	0.994
TC EA27 EXIT ANN BC	845.5	1.196	229.69	0.917
TC EA28 EXIT ANN C	853.9	1.270	238.15	0.951

RESULTS FOR THERMOCOUPLES INSIDE HEATERS
FFM SERIES 2 TEST 11 RUN 202 DONE ON 32972 1242

DESCRIPTION	TEMP DEG F	STD DEV	RISE AB INLET T	NORMALIZED TEMP
TC R0118AB HTR 1 INT	867.7	0.102	251.91	1.006
TC R0219AB HTR 2 INT	834.3	0.820	218.47	0.872
TC R0418AB HTR 4 INT	888.2	1.055	272.38	1.087
TC R0518AB HTR 5 INT	888.1	0.541	272.29	1.087
TC R1019AB HEATER 10	835.7	17.983	219.94	0.878
TC R1218AB HEATER 12	878.4	0.916	262.64	1.048
TC R1318DE HEATER 13	890.6	0.789	274.86	1.097
TC R1418AB HEATER 14	876.4	0.664	260.62	1.040
TC R1518AB HEATER 15	850.0	6.352	234.25	0.935
TC R1618AB HEATER 16	816.4	0.755	200.57	0.801
TC R1718AB HEATER 17	809.3	0.499	193.54	0.773
TC R1817AB HEATER 18	775.6	0.653	159.83	0.638
TC R0118BC HEATER 1	876.6	1.492	260.79	1.041
TC R0118CD HEATER 1	877.5	1.476	261.67	1.044
TC R0118DE HEATER 1	872.9	1.476	257.09	1.026
TC R0219BC HEATER 2	842.0	3.248	226.17	0.903
TC R0418BC HEATER 4	892.0	1.168	276.20	1.102
TC R0418CD HEATER 4	890.5	0.964	274.74	1.097
TC R0418DE HEATER 4	896.9	0.968	281.12	1.122
TC R0518BC HEATER 5	886.5	0.734	270.75	1.081
TC R0518CD HEATER 5	878.2	0.825	262.39	1.047
TC R0718BC HEATER 7	820.4	2.476	204.62	0.817
TC R0718CD HEATER 7	820.9	0.990	205.13	0.819
TC R0718DE HEATER 7	814.6	1.117	198.85	0.794
TC R0818BC HEATER 8	800.8	0.958	184.96	0.738
TC R1019BC HEATER 10	846.2	5.227	230.39	0.920
TC R1718BC HEATER 17	812.1	1.395	196.31	0.784
TC R1918DE HEATER 19	801.8	2.177	185.96	0.742

OPERATING DATA FOR FFM SERIES 2 TEST 11 RUN 203
WHICH WAS DONE ON 33072 1056

DESCRIPTION	MEAN VALUE	STANDARD DEVIATION
HEATER 1 POWER KW	1.47	0.007
HEATER 8,18,19 POWER	2.72	0.026
HTR 12,13,14 POWER	8.61	0.015
HTR 2,7,9,17 POWER	4.83	0.005
HTR 4,5,11,15 POWER	7.72	0.036
HTR 3,6,10,16 POWER	6.11	0.019
TOTAL POWER	30.90	0.099
TEST SECT FLOW, GPM	2.96	0.040
TEST SECT INLET PR	8.81	0.113
TEST SECT OUTLET PR	6.15	0.033
TOTAL FLOW, GPM	10.40	0.099
PUMP OUTLET PR, PSI	8.13	0.072
PUMP SPEED, RPM	137.00	1.432
BLOWER SPEED, RPM	126.70	0.903
AIR FLOW (200 F) CFM	0.99	0.0
TC 313 TEST SECT IN	591.18	0.396
TC 317 TEST SECT OUT	847.29	0.559
TC 300 PUMP OUTLET	588.58	0.456
TC 318 RADIATOR IN	847.93	0.472
TC 334 RADIATOR OUT	597.88	2.205
TC 336 PUMP INLET	585.21	0.850
TC 332 RAD AIR IN	93.59	0.429
TC 331 RAD AIR OUT	249.85	0.685

HEAT BALANCE ON SODIUM FLOWING THROUGH BUNDLE
HEAT SUPPLIED BY DUMMY FUEL RODS = 107435.75 BTU/HR
HEAT ADDED TO SODIUM = 102603.38 BTU/HR
PERCENT HEAT BALANCE = 95.50

RESULTS FOR UNGROUNDED JUNCTION THERMOCOUPLES
FFM SERIES 2 TEST 11 RUN 203 DONE ON 33072 1056

DESCRIPTION	TEMP DEG F	STD DEV	RISE AB INLET T	NORMALIZED TEMP
TC 1504U CH 37	638.9	0.158	47.69	0.178
TC 1706U CH 21	657.6	0.352	66.42	0.248
TC 1807U CH 24	650.8	1.330	59.58	0.222
TC 1108U CH 31	705.0	0.439	113.80	0.424
TC 0409U CH 13	757.4	0.535	166.24	0.620
TC 0509U CH 3	753.7	0.556	162.52	0.606
TC 1009U CH 29	693.1	0.421	101.95	0.380
TC 1409U CH 17	746.9	0.441	155.70	0.581
TC 1609U CH 21	694.0	0.256	102.82	0.383
TC 1914U CH 24	685.3	0.929	94.11	0.351
TC 0815U CH 8	735.6	0.954	144.45	0.539
TC 1316U CH 35	860.6	0.756	269.41	1.005
TC 1516U CH 37	770.3	0.843	179.16	0.668
TC 0817U CH 9	761.6	1.020	170.46	0.636
TC 1217U CH 33	839.4	0.868	248.20	0.926
TC 1318U CH 34	816.0	1.021	224.82	0.838
TC 1718U CH 22	784.6	0.931	193.42	0.721
TC 1219U CH 32	867.3	0.913	276.07	1.029
TC 1819U CH 24	768.0	1.091	176.83	0.659
TC 1120U CH 31	860.1	1.172	268.97	1.003
TC 0421U CH 13	906.6	1.199	315.38	1.176
TC 0521U CH 3	887.6	1.162	296.40	1.105
TC 1021U CH 29	843.9	0.654	252.68	0.942
TC 1421U CH 17	902.0	1.371	310.80	1.159
TC 1621U CH 21	809.9	0.866	218.77	0.816

RESULTS FOR GROUNDED JUNCTION THERMOCOUPLES
FFM SERIES 2 TEST 11 RUN 203 DONE ON 33072 1056

DESCRIPTION	TEMP DEG F	STD DEV	RISE AB INLET T	NORMALIZED TEMP
TC 0118C CH 3	867.9	0.972	276.72	1.032
TC 0618D CH 4	850.1	0.939	258.96	0.966
TC 0618C CH 19	842.3	1.116	251.13	0.936
TC 0219A HEATER 2	820.9	1.006	229.74	0.857
TC 0219B CH 10	819.2	0.875	228.03	0.850
TC 0919A HTR 9 EXT	827.0	0.741	235.78	0.879
TC 0919B CH 29	818.8	0.569	227.62	0.849
TC 0718C CH 5	804.9	1.948	213.72	0.797
TC 0718D CH 6	813.0	0.560	221.78	0.827
TC 0319A HEATER 3	860.5	0.656	269.34	1.004
TC 0319B CH 12	856.6	0.660	265.38	0.990

RESULTS FOR DUCT WALL THERMOCOUPLES
FFM SERIES 2 TEST 11 RUN 203 DONE ON 33072 1056

DESCRIPTION	TEMP DEG F	STD DEV	RISE AB INLET T	NORMALIZED TEMP
TC D0B04 DUCT B	608.7	0.270	17.56	0.065
TC D0E04 DUCT E	640.7	0.487	49.50	0.185
TC D0F04 DUCT F	627.3	0.132	36.09	0.135
TC D0B08 DUCT B	641.7	0.538	50.48	0.188
TC D0D08 DUCT D	686.5	0.333	95.31	0.355
TC D0F08 DUCT F	668.3	0.137	77.14	0.288
TC D0B12 DUCT B	684.2	0.358	93.01	0.347
TC D0E12 DUCT E	738.9	0.339	147.77	0.551
TC D0F12 DUCT F	696.6	0.314	105.44	0.393
TC D0B16 DUCT B	726.0	0.509	134.82	0.503
TC D0D16 DUCT D	789.2	0.276	198.00	0.738
TC D0F16 DUCT F	756.5	0.494	165.29	0.616
TC D0D18 DUCT D	815.3	0.379	224.13	0.836
TC D0E18 DUCT E	829.7	0.365	238.53	0.889
TC DAB18 DUCT AB	752.0	0.482	160.79	0.600
TC DDE18 DUCT DE	820.2	0.439	229.01	0.854
TC DEF18 DUCT EF	812.6	0.492	221.47	0.826
TC D0F18 DUCT F	785.4	0.535	194.19	0.724
TC DFA18 DUCT FA	765.9	0.248	174.75	0.652
TC D0B21 DUCT B	786.1	0.303	194.95	0.727
TC D0D21 DUCT D	854.7	0.627	263.50	0.983
TC D0F21 DUCT F	819.0	0.312	227.85	0.850
TC D0B23 DUCT B	798.1	0.378	206.88	0.771
TC D0D23 DUCT D	871.7	0.851	280.52	1.046
TC D0F23 DUCT F	825.6	0.515	234.38	0.874

RESULTS FOR THERMOCOUPLES IN CHANNEL EXITS
FFM SERIES 2 TEST 11 RUN 203 DONE ON 33072 1056

DESCRIPTION	TEMP DEG F	STD DEV	RISE AB INLET T	NORMALIZED TEMP
TC EC03 EXIT CH 3	870.2	0.891	279.03	1.040
TC EC16 EXIT CH 16	875.4	0.866	284.22	1.060
TC EC17 EXIT CH 17	861.2	0.782	269.98	1.007
TC EC34 EXIT CH 34	876.9	1.143	285.68	1.065
TC EC35 EXIT CH 35	853.6	0.290	262.38	0.978
TC EC36 EXIT CH 36	840.0	1.612	248.87	0.928
TC EC06 EXIT CH 6	826.5	1.064	235.36	0.878
TC EC08 EXIT CH 8	806.1	0.203	214.91	0.801
TC EC27 EXIT CH 27	808.1	0.636	216.95	0.809
TC EA36 EXIT ANN EF	836.5	1.031	245.37	0.915
TC EA27 EXIT ANN BC	808.8	0.601	217.57	0.811
TC EA28 EXIT ANN C	819.1	1.226	227.92	0.850

RESULTS FOR THERMOCOUPLES INSIDE HEATERS
FFM SERIES 2 TEST 11 RUN 203 DONE ON 33072 1056

DESCRIPTION	TEMP DEG F	STD DEV	RISE AB INLET T	NORMALIZED TEMP
TC R0118AB HTR 1 INT	859.1	0.429	267.93	0.999
TC R0219AB HTR 2 INT	812.3	1.365	221.17	0.825
TC R0418AB HTR 4 INT	884.8	0.697	293.64	1.095
TC R0518AB HTR 5 INT	882.1	0.964	290.92	1.085
TC R1019AB HEATER 10	840.1	31.022	248.94	0.928
TC R1218AB HEATER 12	865.5	0.542	274.32	1.023
TC R1318DE HEATER 13	876.7	1.348	285.55	1.065
TC R1418AB HEATER 14	857.3	0.792	266.17	0.993
TC R1518AB HEATER 15	835.4	7.577	244.25	0.911
TC R1618AB HEATER 16	785.8	0.282	194.66	0.726
TC R1718AB HEATER 17	783.9	0.852	192.74	0.719
TC R1817AB HEATER 18	739.3	0.724	148.17	0.553
TC R0118BC HEATER 1	868.9	0.801	277.77	1.036
TC R0118CD HEATER 1	870.2	1.164	279.02	1.040
TC R0118DE HEATER 1	864.9	0.920	273.75	1.021
TC R0219BC HEATER 2	825.5	4.956	234.29	0.874
TC R0418BC HEATER 4	887.5	1.468	296.31	1.105
TC R0418CD HEATER 4	885.7	1.291	294.48	1.098
TC R0418DE HEATER 4	892.1	1.074	300.97	1.122
TC R0518BC HEATER 5	881.3	1.670	290.13	1.082
TC R0518CD HEATER 5	871.0	0.768	279.82	1.043
TC R0718BC HEATER 7	803.6	1.220	212.41	0.792
TC R0718CD HEATER 7	801.8	0.968	210.66	0.786
TC R0718DE HEATER 7	792.1	0.614	200.94	0.749
TC R0818BC HEATER 8	774.5	0.781	183.33	0.684
TC R1019BC HEATER 10	821.5	6.385	230.31	0.859
TC R1718BC HEATER 17	786.5	0.398	195.35	0.728
TC R1918DE HEATER 19	774.5	0.697	183.37	0.684

OPERATING DATA FOR FFM SERIES 2 TEST 11 RUN 204
WHICH WAS DONE ON 33072 1458

DESCRIPTION	MEAN VALUE	STANDARD DEVIATION
HEATER 1 POWER KW	2.10	0.008
HEATER 8,18,19 POWER	3.65	0.029
HTR 12,13,14 POWER	11.11	0.013
HTR 2,7,9,17 POWER	6.41	0.021
HTR 4,5,11,15 POWER	10.45	0.035
HTR 3,6,10,16 POWER	8.15	0.009
TOTAL POWER	41.05	0.067
TEST SECT FLOW, GPM	4.03	0.021
TEST SECT INLET PR	8.92	0.094
TEST SECT OUTLET PR	6.18	0.048
TOTAL FLOW, GPM	11.26	0.154
PUMP OUTLET PR, PSI	8.08	0.038
PUMP SPEED, RPM	136.50	1.237
BLOWER SPEED, RPM	115.49	0.715
AIR FLOW (200 F) CFM	1.02	0.007
TC 313 TEST SECT IN	606.21	0.386
TC 317 TEST SECT OUT	861.62	0.694
TC 300 PUMP OUTLET	602.76	0.435
TC 318 RADIATOR IN	860.57	0.476
TC 334 RADIATOR OUT	604.53	5.556
TC 336 PUMP INLET	600.63	0.483
TC 332 RAD AIR IN	106.11	1.079
TC 331 RAD AIR OUT	291.24	1.716

HEAT BALANCE ON SODIUM FLOWING THROUGH BUNDLE
HEAT SUPPLIED BY DUMMY FUEL RODS = 142985.88 BTU/HR
HEAT ADDED TO SODIUM = 138768.38 BTU/HR
PERCENT HEAT BALANCE = 97.05

RESULTS FOR UNGROUNDED JUNCTION THERMOCOUPLES
FFM SERIES 2 TEST 11 RUN 204 DONE ON 33072 1458

DESCRIPTION	TEMP DEG F	STD DEV	RISE AB INLET T	NORMALIZED TEMP
TC 1504U CH 37	653.5	0.477	47.34	0.180
TC 1706U CH 21	674.6	0.583	68.38	0.260
TC 1807U CH 24	668.3	0.695	62.08	0.236
TC 1108U CH 31	720.3	0.293	114.08	0.433
TC 0409U CH 13	779.2	0.343	172.96	0.657
TC 0509U CH 3	775.1	0.644	168.86	0.642
TC 1009U CH 29	706.4	0.649	100.17	0.381
TC 1409U CH 17	765.7	0.641	159.47	0.606
TC 1609U CH 21	709.8	0.777	103.56	0.394
TC 1914U CH 24	696.4	0.836	90.22	0.343
TC 0815U CH 8	751.0	1.197	144.79	0.550
TC 1316U CH 35	873.1	0.740	266.88	1.014
TC 1516U CH 37	778.0	0.735	171.83	0.653
TC 0817U CH 9	777.3	1.264	171.07	0.650
TC 1217U CH 33	852.1	0.778	245.88	0.934
TC 1318U CH 34	826.3	0.747	220.07	0.836
TC 1718U CH 22	801.6	1.189	195.36	0.742
TC 1219U CH 32	880.8	0.862	274.62	1.043
TC 1819U CH 24	774.7	1.359	168.50	0.640
TC 1120U CH 31	878.8	1.062	272.54	1.036
TC 0421U CH 13	936.7	0.851	330.46	1.256
TC 0521U CH 3	922.3	0.913	316.14	1.201
TC 1021U CH 29	861.7	0.753	255.52	0.971
TC 1421U CH 17	922.3	0.950	316.08	1.201
TC 1621U CH 21	816.0	0.891	209.83	0.797

RESULTS FOR GROUNDED JUNCTION THERMOCOUPLES
FFM SERIES 2 TEST 11 RUN 204 DONE ON 33072 1458

DESCRIPTION	TEMP DEG F	STD DEV	RISE AB INLET T	NORMALIZED TEMP
TC 0118C CH 3	900.9	2.279	294.65	1.120
TC 0618D CH 4	878.6	1.072	272.44	1.035
TC 0618C CH 19	867.4	1.140	261.24	0.993
TC 0219A HEATER 2	842.1	0.636	235.88	0.896
TC 0219B CH 10	838.7	1.504	232.47	0.883
TC 0919A HTR 9 EXT	842.3	0.622	236.10	0.897
TC 0919B CH 29	834.9	0.672	228.74	0.869
TC 0718C CH 5	834.2	0.772	227.99	0.866
TC 0718D CH 6	838.6	1.268	232.39	0.883
TC 0319A HEATER 3	887.5	1.271	281.33	1.069
TC 0319B CH 12	879.6	0.866	273.37	1.039

RESULTS FOR DUCT WALL THERMOCOUPLES
FFM SERIES 2 TEST 11 RUN 204 DONE ON 33072 1458

DESCRIPTION	TEMP DEG F	STD DEV	RISE AB INLET T	NORMALIZED TEMP
TC DOB04 DUCT B	622.5	0.648	16.28	0.062
TC DOE04 DUCT E	654.0	0.542	47.84	0.182
TC DOF04 DUCT F	641.1	0.644	34.87	0.132
TC DOB08 DUCT B	653.6	0.440	47.36	0.180
TC DOD08 DUCT D	698.5	0.607	92.32	0.351
TC DOF08 DUCT F	681.8	0.513	75.64	0.287
TC DOB12 DUCT B	693.6	0.555	87.40	0.332
TC DOE12 DUCT E	750.0	0.715	143.81	0.546
TC DOF12 DUCT F	704.7	0.644	98.52	0.374
TC DOB16 DUCT B	733.4	0.969	127.24	0.483
TC DOD16 DUCT D	800.7	0.819	194.46	0.739
TC DOF16 DUCT F	762.4	0.525	156.19	0.593
TC DOD18 DUCT D	826.7	0.659	220.52	0.838
TC DOE18 DUCT E	838.1	0.581	231.93	0.881
TC DAB18 DUCT AB	756.5	1.061	150.31	0.571
TC DDE18 DUCT DE	829.5	0.692	223.30	0.848
TC DEF18 DUCT EF	820.2	0.596	213.99	0.813
TC DOF18 DUCT F	791.7	0.558	185.45	0.705
TC DFA18 DUCT FA	771.7	0.804	165.51	0.629
TC DOB21 DUCT B	793.1	0.894	186.91	0.710
TC DOD21 DUCT D	867.8	0.466	261.59	0.994
TC DOF21 DUCT F	822.9	0.392	216.70	0.823
TC DOB23 DUCT B	804.9	0.477	198.73	0.755
TC DOD23 DUCT D	887.1	0.727	280.87	1.067
TC DOF23 DUCT F	826.9	0.813	220.72	0.839

RESULTS FOR THERMOCOUPLES IN CHANNEL EXITS
FFM SERIES 2 TEST 11 RUN 204 DONE ON 33072 1458

DESCRIPTION	TEMP DEG F	STD DEV	RISE AB INLET T	NORMALIZED TEMP
TC EC03 EXIT CH 3	898.8	1.183	292.63	1.112
TC EC16 EXIT CH 16	894.5	1.006	288.31	1.096
TC EC17 EXIT CH 17	871.8	0.962	265.61	1.009
TC EC34 EXIT CH 34	891.1	1.052	284.85	1.082
TC EC35 EXIT CH 35	860.2	0.952	253.97	0.965
TC EC36 EXIT CH 36	845.4	1.175	239.23	0.909
TC EC06 EXIT CH 6	841.6	1.246	235.42	0.895
TC EC08 EXIT CH 8	814.7	0.738	208.49	0.792
TC EC27 EXIT CH 27	818.5	1.324	212.33	0.807
TC EA36 EXIT ANN EF	846.5	1.864	240.34	0.913
TC EA27 EXIT ANN BC	818.9	1.254	212.70	0.808
TC EA28 EXIT ANN C	833.8	0.715	227.60	0.865

RESULTS FOR THERMOCOUPLES INSIDE HEATERS
FFM SERIES 2 TEST 11 RUN 204 DONE ON 33072 1458

DESCRIPTION	TEMP DEG F	STD DEV	RISE AB INLET T	NORMALIZED TEMP
TC R0118AB HTR 1 INT	892.0	0.649	285.77	1.086
TC R0219AB HTR 2 INT	838.0	1.610	231.84	0.881
TC R0418AB HTR 4 INT	922.0	1.120	315.83	1.200
TC R0518AB HTR 5 INT	916.2	1.393	310.01	1.178
TC R1019AB HEATER 10	883.6	28.982	277.35	1.054
TC R1218AB HEATER 12	882.9	0.755	276.68	1.051
TC R1318DE HEATER 13	897.5	0.903	291.29	1.107
TC R1418AB HEATER 14	875.5	0.879	269.33	1.023
TC R1518AB HEATER 15	884.4	7.271	278.24	1.057
TC R1618AB HEATER 16	798.3	0.652	192.07	0.730
TC R1718AB HEATER 17	803.2	0.954	196.99	0.749
TC R1817AB HEATER 18	747.6	1.557	141.44	0.537
TC R0118BC HEATER 1	903.0	0.399	296.78	1.128
TC R0118CD HEATER 1	905.4	0.462	299.15	1.137
TC R0118DE HEATER 1	899.6	0.441	293.38	1.115
TC R0219BC HEATER 2	840.4	6.463	234.20	0.890
TC R0418BC HEATER 4	923.0	1.718	316.84	1.204
TC R0418CD HEATER 4	920.4	1.407	314.16	1.194
TC R0418DE HEATER 4	926.8	1.703	320.56	1.218
TC R0518BC HEATER 5	916.3	1.808	310.13	1.178
TC R0518CD HEATER 5	905.7	1.252	299.46	1.138
TC R0718BC HEATER 7	827.1	2.039	220.93	0.839
TC R0718CD HEATER 7	825.1	1.481	218.90	0.832
TC R0718DE HEATER 7	812.5	1.423	206.29	0.784
TC R0818BC HEATER 8	788.6	0.987	182.40	0.693
TC R1019BC HEATER 10	854.6	12.716	248.35	0.944
TC R1718BC HEATER 17	803.9	1.019	197.71	0.751
TC R1918DE HEATER 19	790.2	1.380	184.02	0.699

OPERATING DATA FOR FFM SERIES 2 TEST 12 RUN 101
WHICH WAS DONE ON 32072 1027

DESCRIPTION	MEAN VALUE	STANDARD DEVIATION
HEATER 1 POWER KW	8.76	0.013
HEATER 8,18,19 POWER	25.76	0.033
HTR 12,13,14 POWER	25.22	0.037
HTR 2,7,9,17 POWER	34.50	0.043
HTR 4,5,11,15 POWER	34.40	0.038
HTR 3,6,10,16 POWER	33.56	0.045
TOTAL POWER	160.71	0.166
TEST SECT FLOW, GPM	54.29	0.092
TEST SECT INLET PR	34.06	0.069
TEST SECT OUTLET PR	8.80	0.048
TOTAL FLOW, GPM	112.13	1.357
PUMP OUTLET PR, PSI	35.26	0.069
PUMP SPEED, RPM	1497.00	0.471
BLOWER SPEED, RPM	689.49	0.513
AIR FLOW (200 F) CFM	6.60	0.114
TC 313 TEST SECT IN	616.33	0.238
TC 317 TEST SECT OUT	691.60	0.290
TC 300 PUMP OUTLET	617.58	0.322
TC 318 RADIATOR IN	691.35	0.305
TC 334 RADIATOR OUT	610.20	0.386
TC 336 PUMP INLET	616.46	0.309
TC 332 RAD AIR IN	83.24	0.352
TC 331 RAD AIR OUT	179.67	0.270

HEAT BALANCE ON SODIUM FLOWING THROUGH BUNDLE
HEAT SUPPLIED BY DUMMY FUEL RODS = 553912.88 BTU/HR
HEAT ADDED TO SODIUM = 549419.69 BTU/HR
PERCENT HEAT BALANCE = 99.19

RESULTS FOR UNGROUNDED JUNCTION THERMOCOUPLES
FFM SERIES 2 TEST 12 RUN 101 DONE ON 32072 1027

DESCRIPTION	TEMP DEG F	STD DEV	RISE AB INLET T	NORMALIZED TEMP
TC 1504U CH 37	633.4	0.364	17.07	0.225
TC 1706U CH 21	652.1	0.381	35.78	0.471
TC 1807U CH 24	663.1	0.274	46.76	0.616
TC 1108U CH 31	652.0	0.320	35.68	0.470
TC 0409U CH 13	670.4	0.281	54.07	0.713
TC 0509U CH 3	668.6	0.406	52.30	0.689
TC 1009U CH 29	643.9	0.267	27.57	0.363
TC 1409U CH 17	661.2	0.280	44.90	0.592
TC 1609U CH 21	663.1	0.335	46.77	0.616
TC 1914U CH 24	661.0	0.263	44.69	0.589
TC 0815U CH 8	688.5	0.281	72.16	0.951
TC 1316U CH 35	681.9	0.309	65.53	0.864
TC 1516U CH 37	671.4	0.166	55.03	0.725
TC 0817U CH 9	696.0	0.223	79.72	1.051
TC 1217U CH 33	673.5	0.467	57.18	0.754
TC 1318U CH 34	669.7	0.371	53.38	0.703
TC 1718U CH 22	699.5	0.422	83.21	1.097
TC 1219U CH 32	676.3	0.555	59.97	0.790
TC 1819U CH 24	691.0	0.607	74.72	0.985
TC 1120U CH 31	683.8	0.648	67.43	0.889
TC 0421U CH 13	721.4	0.477	105.08	1.385
TC 0521U CH 3	722.9	0.577	106.57	1.404
TC 1021U CH 29	678.6	0.460	62.23	0.820
TC 1421U CH 17	708.8	0.506	92.48	1.219
TC 1621U CH 21	705.7	0.524	89.39	1.178

RESULTS FOR GROUNDED JUNCTION THERMOCOUPLES
FFM SERIES 2 TEST 12 RUN 101 DONE ON 32072 1027

DESCRIPTION	TEMP DEG F	STD DEV	RISE AB INLET T	NORMALIZED TEMP
TC 0118C CH 3	715.8	0.674	99.44	1.310
TC 0618D CH 4	707.0	0.499	90.66	1.195
TC 0618C CH 19	703.3	0.558	87.01	1.147
TC 0219A HEATER 2	711.2	0.543	94.90	1.251
TC 0219B CH 10	702.5	0.602	86.21	1.136
TC 0919A HTR 9 EXT	709.1	0.394	92.77	1.222
TC 0919B CH 29	694.6	0.369	78.32	1.032
TC 0718C CH 5	714.3	0.613	97.98	1.291
TC 0718D CH 6	705.3	0.917	88.95	1.172
TC 0319A HEATER 3	707.3	0.540	91.01	1.199
TC 0319B CH 12	696.6	0.414	80.30	1.058

RESULTS FOR DUCT WALL THERMOCOUPLES
FFM SERIES 2 TEST 12 RUN 101 DONE ON 32072 1027

DESCRIPTION	TEMP DEG F	STD DEV	RISE AB INLET T	NORMALIZED TEMP
TC D0B04 DUCT B	621.6	0.300	5.31	0.070
TC D0E04 DUCT E	619.6	0.407	3.32	0.044
TC D0F04 DUCT F	620.3	0.366	3.92	0.052
TC D0B08 DUCT B	624.1	0.396	7.75	0.102
TC D0D08 DUCT D	626.8	0.243	10.49	0.138
TC D0F08 DUCT F	630.9	0.278	14.57	0.192
TC D0B12 DUCT B	635.4	0.296	19.10	0.252
TC D0E12 DUCT E	638.5	0.411	22.21	0.293
TC D0F12 DUCT F	635.3	0.380	18.92	0.249
TC D0B16 DUCT B	655.0	0.239	38.65	0.509
TC D0D16 DUCT D	640.7	0.321	24.33	0.321
TC D0F16 DUCT F	646.8	0.296	30.48	0.402
TC D0D18 DUCT D	644.5	0.401	28.19	0.371
TC D0E18 DUCT E	650.0	0.352	33.70	0.444
TC DAB18 DUCT AB	652.0	0.265	35.67	0.470
TC DDE18 DUCT DE	641.0	0.137	24.64	0.325
TC DEF18 DUCT EF	649.9	0.284	33.58	0.443
TC D0F18 DUCT F	654.6	0.404	38.26	0.504
TC DFA18 DUCT FA	654.9	0.417	38.58	0.508
TC D0B21 DUCT B	655.9	0.561	39.56	0.521
TC D0D21 DUCT D	654.8	0.436	38.43	0.506
TC D0F21 DUCT F	667.3	0.401	50.98	0.672
TC D0B23 DUCT B	662.4	0.493	46.07	0.607
TC D0D23 DUCT D	662.3	0.593	45.92	0.605
TC D0F23 DUCT F	674.0	0.512	57.67	0.760

RESULTS FOR THERMOCOUPLES IN CHANNEL EXITS
FFM SERIES 2 TEST 12 RUN 101 DONE ON 32072 1027

DESCRIPTION	TEMP DEG F	STD DEV	RISE AB INLET T	NORMALIZED TEMP
TC EC03 EXIT CH 3	709.6	0.456	93.23	1.229
TC EC16 EXIT CH 16	701.3	0.511	84.95	1.119
TC EC17 EXIT CH 17	686.7	0.544	70.40	0.928
TC EC34 EXIT CH 34	680.7	0.526	64.41	0.849
TC EC35 EXIT CH 35	680.7	0.621	64.34	0.848
TC EC36 EXIT CH 36	681.3	0.559	64.92	0.856
TC EC06 EXIT CH 6	717.8	0.514	101.47	1.337
TC EC08 EXIT CH 8	699.6	0.366	83.25	1.097
TC EC27 EXIT CH 27	676.6	0.346	60.28	0.794
TC EA36 EXIT ANN EF	681.7	0.291	65.33	0.861
TC EA27 EXIT ANN BC	679.7	0.387	63.37	0.835
TC EA28 EXIT ANN C	678.2	0.395	61.86	0.815

RESULTS FOR THERMOCOUPLES INSIDE HEATERS
FFM SERIES 2 TEST 12 RUN 101 DONE ON 32072 1027

DESCRIPTION	TEMP DEG F	STD DEV	RISE AB INLET T	NORMALIZED TEMP
TC R0118AB HTR 1 INT	762.9	0.349	146.60	1.932
TC R0219AB HTR 2 INT	757.9	0.555	141.58	1.866
TC R0418AB HTR 4 INT	791.8	0.511	175.52	2.313
TC R0518AB HTR 5 INT	759.8	0.431	143.45	1.890
TC R1019AB HEATER 10	746.7	3.297	130.41	1.719
TC R1218AB HEATER 12	729.2	0.914	112.86	1.487
TC R1318DE HEATER 13	766.5	0.760	150.17	1.979
TC R1418AB HEATER 14	753.9	0.708	137.53	1.812
TC R1518AB HEATER 15	757.8	0.698	141.42	1.864
TC R1618AB HEATER 16	766.0	0.516	149.69	1.973
TC R1718AB HEATER 17	753.6	0.450	137.23	1.808
TC R1817AB HEATER 18	731.7	0.454	115.38	1.520
TC R0118BC HEATER 1	775.2	0.488	158.86	2.093
TC R0118CD HEATER 1	787.6	0.360	171.23	2.256
TC R0118DE HEATER 1	777.5	0.510	161.13	2.123
TC R0219BC HEATER 2	757.9	0.371	141.61	1.866
TC R0418BC HEATER 4	772.4	0.470	156.11	2.057
TC R0418CD HEATER 4	763.3	0.516	147.01	1.937
TC R0418DE HEATER 4	761.6	0.451	145.30	1.915
TC R0518BC HEATER 5	761.0	0.542	144.72	1.907
TC R0518CD HEATER 5	762.3	0.452	146.02	1.924
TC R0718BC HEATER 7	763.3	0.629	146.92	1.936
TC R0718CD HEATER 7	761.6	0.370	145.26	1.914
TC R0718DE HEATER 7	756.9	0.513	140.54	1.852
TC R0818BC HEATER 8	770.3	0.447	153.99	2.029
TC R1019BC HEATER 10	737.6	0.867	121.23	1.598
TC R1718BC HEATER 17	756.0	0.404	139.69	1.841
TC R1918DE HEATER 19	764.3	2.006	148.00	1.950

OPERATING DATA FOR FFM SERIES 2 TEST 12 RUN 102
WHICH WAS DONE ON 32072 1351

DESCRIPTION	MEAN VALUE	STANDARD DEVIATION
HEATER 1 POWER KW	8.75	0.009
HEATER 8,18,19 POWER	25.73	0.011
HTR 12,13,14 POWER	25.17	0.011
HTR 2,7,9,17 POWER	34.44	0.020
HTR 4,5,11,15 POWER	34.37	0.014
HTR 3,6,10,16 POWER	33.53	0.027
TOTAL POWER	160.48	0.110
TEST SECT FLOW, GPM	54.25	0.075
TEST SECT INLET PR	34.01	0.109
TEST SECT OUTLET PR	8.77	0.037
TOTAL FLOW, GPM	113.56	1.417
PUMP OUTLET PR, PSI	34.93	0.085
PUMP SPEED, RPM	1501.20	0.837
BLOWER SPEED, RPM	702.36	0.550
AIR FLOW (200 F) CFM	6.78	0.110
TC 313 TEST SECT IN	615.40	0.061
TC 317 TEST SECT OUT	691.54	0.061
TC 300 PUMP OUTLET	616.74	0.265
TC 318 RADIATOR IN	691.24	0.149
TC 334 RADIATOR OUT	610.10	0.320
TC 336 PUMP INLET	615.90	0.370
TC 332 RAD AIR IN	87.13	0.061
TC 331 RAD AIR OUT	181.79	0.307

HEAT BALANCE ON SODIUM FLOWING THROUGH BUNDLE
HEAT SUPPLIED BY DUMMY FUEL RODS = 553195.75 BTU/HR
HEAT ADDED TO SODIUM = 555522.56 BTU/HR
PERCENT HEAT BALANCE = 100.42

RESULTS FOR UNGROUNDED JUNCTION THERMOCOUPLES
FFM SERIES 2 TEST 12 RUN 102 DONE ON 32072 1351

DESCRIPTION	TEMP DEG F	STD DEV	RISE AB INLET T	NORMALIZED TEMP
TC 1504U CH 37	632.4	0.244	17.04	0.225
TC 1706U CH 21	651.6	0.239	36.22	0.478
TC 1807U CH 24	662.5	0.332	47.08	0.621
TC 1108U CH 31	651.9	0.149	36.48	0.481
TC 0409U CH 13	669.9	0.239	54.50	0.719
TC 0509U CH 3	668.0	0.239	52.64	0.694
TC 1009U CH 29	643.1	0.221	27.68	0.365
TC 1409U CH 17	660.7	0.061	45.30	0.597
TC 1609U CH 21	663.0	0.233	47.62	0.628
TC 1914U CH 24	660.6	0.233	45.16	0.596
TC 0815U CH 8	688.0	0.244	72.62	0.958
TC 1316U CH 35	681.4	0.239	65.96	0.870
TC 1516U CH 37	671.3	0.233	55.90	0.737
TC 0817U CH 9	695.6	0.307	80.18	1.057
TC 1217U CH 33	673.1	0.292	57.66	0.760
TC 1318U CH 34	669.2	0.239	53.82	0.710
TC 1718U CH 22	698.6	0.221	83.20	1.097
TC 1219U CH 32	675.6	0.203	60.23	0.794
TC 1819U CH 24	690.4	0.228	74.97	0.989
TC 1120U CH 31	683.6	0.374	68.18	0.899
TC 0421U CH 13	720.9	0.239	105.49	1.391
TC 0521U CH 3	722.3	0.263	106.90	1.410
TC 1021U CH 29	678.0	0.239	62.63	0.826
TC 1421U CH 17	707.9	0.285	92.49	1.220
TC 1621U CH 21	704.8	0.097	89.39	1.179

RESULTS FOR GROUNDED JUNCTION THERMOCOUPLES
FFM SERIES 2 TEST 12 RUN 102 DONE ON 32072 1351

DESCRIPTION	TEMP DEG F	STD DEV	RISE AB INLET T	NORMALIZED TEMP
TC 0118C CH 3	714.8	0.097	99.37	1.311
TC 0618D CH 4	706.4	0.386	91.05	1.201
TC 0618C CH 19	702.8	0.348	87.41	1.153
TC 0219A HEATER 2	710.6	0.141	95.23	1.256
TC 0219B CH 10	702.0	0.348	86.61	1.142
TC 0919A HTR 9 EXT	708.2	0.308	92.79	1.224
TC 0919B CH 29	694.5	0.239	79.13	1.044
TC 0718C CH 5	713.8	0.412	98.45	1.298
TC 0718D CH 6	706.7	1.211	91.28	1.204
TC 0319A HEATER 3	706.7	0.478	91.27	1.204
TC 0319B CH 12	696.5	0.308	81.11	1.070

RESULTS FOR DUCT WALL THERMCCOUPLES
FFM SERIES 2 TEST 12 RUN 102 DONE ON 32072 1351

DESCRIPTION	TEMP DEG F	STD DEV	RISE AB INLET T	NORMALIZED TEMP
TC DOB04 DUCT B	621.1	0.472	5.66	0.075
TC DOE04 DUCT E	619.1	0.189	3.68	0.049
TC DOF04 DUCT F	619.7	0.179	4.33	0.057
TC DOB08 DUCT B	623.2	0.265	7.76	0.102
TC DOD08 DUCT D	626.7	0.332	11.30	0.149
TC DOF08 DUCT F	630.8	0.179	15.39	0.203
TC DOB12 DUCT B	635.0	0.244	19.58	0.258
TC DOE12 DUCT E	638.4	0.179	23.03	0.304
TC DOF12 DUCT F	634.8	0.239	19.38	0.256
TC DOB16 DUCT B	654.9	0.061	39.54	0.521
TC DOD16 DUCT D	640.5	0.149	25.14	0.332
TC DOF16 DUCT F	646.7	0.224	31.31	0.413
TC DOD18 DUCT D	644.1	0.233	28.66	0.378
TC DOE18 DUCT E	650.0	0.061	34.60	0.456
TC DAB18 DUCT AB	651.9	0.179	36.49	0.481
TC DDE18 DUCT DE	641.3	0.239	25.88	0.341
TC DEF18 DUCT EF	649.9	0.061	34.46	0.454
TC DOF18 DUCT F	654.1	0.150	38.68	0.510
TC DFA18 DUCT FA	654.4	0.239	39.02	0.515
TC DOB21 DUCT B	655.4	0.367	40.01	0.528
TC DOD21 DUCT D	654.1	0.228	38.71	0.511
TC DOF21 DUCT F	667.2	0.097	51.77	0.683
TC DOB23 DUCT B	661.8	0.261	46.45	0.613
TC DOD23 DUCT D	660.8	0.190	45.41	0.599
TC DOF23 DUCT F	673.1	0.097	57.69	0.761

RESULTS FOR THERMOCOUPLES IN CHANNEL EXITS
FFM SERIES 2 TEST 12 RUN 102 DONE ON 32072 1351

DESCRIPTION	TEMP DEG F	STD DEV	RISE AB INLET T	NORMALIZED TEMP
TC EC03 EXIT CH 3	709.8	0.097	94.39	1.245
TC EC16 EXIT CH 16	700.6	0.228	85.19	1.124
TC EC17 EXIT CH 17	685.3	0.233	69.88	0.922
TC EC34 EXIT CH 34	680.1	0.348	64.71	0.853
TC EC35 EXIT CH 35	680.1	0.412	64.73	0.854
TC EC36 EXIT CH 36	681.6	0.097	66.19	0.873
TC EC06 EXIT CH 6	717.3	0.367	101.87	1.344
TC EC08 EXIT CH 8	698.7	0.462	83.27	1.098
TC EC27 EXIT CH 27	676.8	0.444	61.43	0.810
TC EA36 EXIT ANN EF	682.3	0.242	66.91	0.882
TC EA27 EXIT ANN BC	679.1	0.574	63.73	0.841
TC EA28 EXIT ANN C	679.3	0.588	63.89	0.843

RESULTS FOR THERMOCOUPLES INSIDE HEATERS
FFM SERIES 2 TEST 12 RUN 102 DONE ON 32072 1351

DESCRIPTION	TEMP DEG F	STD DEV	RISE AB INLET T	NORMALIZED TEMP
TC R0118AB HTR 1 INT	762.4	0.061	146.96	1.938
TC R0219AB HTR 2 INT	757.3	0.348	141.87	1.871
TC R0418AB HTR 4 INT	791.3	0.239	175.93	2.320
TC R0518AB HTR 5 INT	758.8	0.145	143.40	1.891
TC R1019AB HEATER 10	743.0	0.889	127.56	1.682
TC R1218AB HEATER 12	730.7	1.514	115.26	1.520
TC R1318DE HEATER 13	765.2	0.367	149.79	1.976
TC R1418AB HEATER 14	752.8	0.097	137.43	1.813
TC R1518AB HEATER 15	756.4	0.175	140.97	1.859
TC R1618AB HEATER 16	766.6	0.228	151.23	1.995
TC R1718AB HEATER 17	752.5	0.097	137.11	1.808
TC R1817AB HEATER 18	730.8	0.216	115.41	1.522
TC R0118BC HEATER 1	775.0	0.407	159.56	2.104
TC R0118CD HEATER 1	786.9	0.231	171.55	2.263
TC R0118DE HEATER 1	777.3	0.301	161.85	2.135
TC R0219BC HEATER 2	756.9	0.282	141.54	1.867
TC R0418BC HEATER 4	771.8	0.355	156.37	2.062
TC R0418CD HEATER 4	762.8	0.335	147.37	1.944
TC R0418DE HEATER 4	761.4	0.335	146.05	1.926
TC R0518BC HEATER 5	759.9	0.336	144.54	1.906
TC R0518CD HEATER 5	761.3	0.386	145.87	1.924
TC R0718BC HEATER 7	761.8	0.509	146.35	1.930
TC R0718CD HEATER 7	760.9	0.350	145.47	1.919
TC R0718DE HEATER 7	756.3	0.261	140.86	1.858
TC R0818BC HEATER 8	769.3	0.449	153.85	2.029
TC R1019BC HEATER 10	736.9	1.130	121.48	1.602
TC R1718BC HEATER 17	755.0	0.355	139.57	1.841
TC R1918DE HEATER 19	758.0	0.763	142.60	1.881

OPERATING DATA FOR FFM SERIES 2 TEST 12 RUN 103
WHICH WAS CONF ON 32072 1533

DESCRIPTION	MEAN VALUE	STANDARD DEVIATION
HEATER 1 POWER KW	8.81	0.004
HEATER 8,18,19 POWER	25.90	0.008
HTR 12,13,14 POWER	25.34	0.008
HTR 2,7,9,17 POWER	34.68	0.015
HTR 4,5,11,15 POWER	34.58	0.017
HTR 3,6,10,16 POWER	33.76	0.008
TOTAL POWER	161.50	0.0
TEST SECT FLOW, GPM	54.23	0.044
TEST SECT INLET PR	34.03	0.079
TEST SECT OUTLET PR	8.75	0.048
TOTAL FLOW, GPM	113.50	0.910
PUMP OUTLET PR, PSI	34.77	0.086
PUMP SPEED, RPM	1506.00	0.894
BLOWER SPEED, RPM	705.03	0.242
AIR FLOW (200 F) CFM	6.85	0.108
TC 313 TEST SECT IN	616.92	0.169
TC 317 TEST SECT OUT	693.03	0.280
TC 300 PUMP OUTLET	618.62	0.296
TC 318 RADIATOR IN	692.79	0.106
TC 334 RADIATOR OUT	611.26	0.154
TC 336 PUMP INLET	617.40	0.276
TC 332 RAD AIR IN	88.99	0.270
TC 331 RAD AIR OUT	183.24	0.230

HEAT BALANCE ON SODIUM FLOWING THROUGH BUNDLE
HEAT SUPPLIED BY DUMMY FUEL RODS = 556883.88 BTU/HR
HEAT ADDED TO SODIUM = 554800.44 BTU/HR
PERCENT HEAT BALANCE = 99.63

RESULTS FOR UNGROUNDED JUNCTION THERMOCOUPLES
FFM SERIES 2 TEST 12 RUN 103 DONE ON 32072 1533

DESCRIPTION	TEMP DEG F	STD DEV	RISE AB INLET T	NORMALIZED TEMP
TC 1504U CH 37	633.9	0.216	17.03	0.223
TC 1706U CH 21	653.5	0.088	36.59	0.479
TC 1807U CH 24	664.6	0.128	47.64	0.624
TC 1108U CH 31	653.5	0.158	36.54	0.478
TC 0409U CH 13	671.8	0.276	54.92	0.719
TC 0509U CH 3	669.6	0.194	52.66	0.689
TC 1009U CH 29	645.0	0.270	28.04	0.367
TC 1409U CH 17	662.2	0.158	45.30	0.593
TC 1609U CH 21	665.0	0.143	48.08	0.629
TC 1914U CH 24	662.1	0.241	45.18	0.591
TC 0815U CH 8	690.3	0.177	73.42	0.961
TC 1316U CH 35	683.6	0.183	66.72	0.873
TC 1516U CH 37	672.8	0.194	55.90	0.732
TC 0817U CH 9	697.5	0.116	80.63	1.055
TC 1217U CH 33	675.0	0.076	58.04	0.760
TC 1318U CH 34	670.8	0.257	53.85	0.705
TC 1718U CH 22	701.3	0.283	84.42	1.105
TC 1219U CH 32	677.4	0.279	60.46	0.791
TC 1819U CH 24	692.1	0.135	75.23	0.985
TC 1120U CH 31	685.2	0.311	68.32	0.894
TC 0421U CH 13	722.5	0.222	105.60	1.382
TC 0521U CH 3	724.0	0.240	107.06	1.401
TC 1021U CH 29	679.2	0.247	62.32	0.816
TC 1421U CH 17	709.5	0.233	92.60	1.212
TC 1621U CH 21	706.4	0.303	89.46	1.171

RESULTS FOR GROUNDED JUNCTION THERMOCOUPLES
FFM SERIES 2 TEST 12 RUN 103 DONE ON 32072 1533

DESCRIPTION	TEMP DEG F	STD DEV	RISE AB INLET T	NORMALIZED TEMP
TC 0118C CH 3	716.9	0.135	99.99	1.309
TC 0618D CH 4	707.7	0.435	90.75	1.188
TC 0618C CH 19	704.5	0.222	87.54	1.146
TC 0219A HEATER 2	712.4	0.289	95.49	1.250
TC 0219B CH 10	702.9	0.498	85.98	1.125
TC 0919A HTR 9 EXT	710.7	0.133	93.76	1.227
TC 0919B CH 29	696.5	0.241	79.59	1.042
TC 0718C CH 5	716.3	0.254	99.39	1.301
TC 0718D CH 6	707.3	0.747	90.39	1.183
TC 0319A HEATER 3	708.0	0.404	91.04	1.192
TC 0319B CH 12	698.1	0.420	81.23	1.063

RESULTS FOR DUCT WALL THERMOCOUPLES
FFM SERIES 2 TEST 12 RUN 103 DONE ON 32072 1533

DESCRIPTION	TEMP DEG F	STD DEV	RISE AB INLET T	NORMALIZED TEMP
TC DOB04 DUCT B	622.2	0.296	5.28	0.069
TC DOE04 DUCT E	620.2	0.106	3.29	0.043
TC DOF04 DUCT F	620.8	0.215	3.87	0.051
TC DOB08 DUCT B	624.6	0.194	7.72	0.101
TC DOD08 DUCT D	627.9	0.158	10.98	0.144
TC DOF08 DUCT F	631.8	0.082	14.93	0.195
TC DOB12 DUCT B	636.5	0.239	19.60	0.257
TC DOE12 DUCT E	639.5	0.082	22.57	0.295
TC DOF12 DUCT F	636.3	0.313	19.37	0.254
TC DOB16 DUCT B	656.4	0.161	39.51	0.517
TC DOD16 DUCT D	641.7	0.235	24.81	0.325
TC DOF16 DUCT F	647.7	0.264	30.82	0.403
TC DOD18 DUCT D	645.6	0.161	28.65	0.375
TC DOE18 DUCT E	651.5	0.128	34.58	0.453
TC DAB18 DUCT AB	653.4	0.077	36.52	0.478
TC DDE18 DUCT DE	642.3	0.200	25.37	0.332
TC DEF18 DUCT EF	650.9	0.179	33.96	0.445
TC DOF18 DUCT F	655.6	0.076	38.70	0.507
TC DFA18 DUCT FA	655.6	0.154	38.66	0.506
TC DOB21 DUCT B	656.1	0.270	39.19	0.513
TC DOD21 DUCT D	655.3	0.241	38.43	0.503
TC DOF21 DUCT F	668.4	0.236	51.47	0.674
TC DOB23 DUCT B	663.1	0.327	46.19	0.605
TC DOD23 DUCT D	662.1	0.491	45.16	0.591
TC DOF23 DUCT F	674.3	0.236	57.39	0.751

RESULTS FOR THERMOCOUPLES IN CHANNEL EXITS
FFM SERIES 2 TEST 12 RUN 103 DONE ON 32072 1533

DESCRIPTION	TEMP DEG F	STD DEV	RISE AB INLET T	NORMALIZED TEMP
TC EC03 EXIT CH 3	711.5	0.336	94.59	1.238
TC EC16 EXIT CH 16	702.2	0.469	85.30	1.117
TC EC17 EXIT CH 17	686.5	0.459	69.59	0.911
TC EC34 EXIT CH 34	681.4	0.266	64.44	0.844
TC EC35 EXIT CH 35	681.3	0.348	64.36	0.842
TC EC36 EXIT CH 36	682.8	0.419	65.88	0.862
TC EC06 EXIT CH 6	718.9	0.167	102.00	1.335
TC EC08 EXIT CH 8	701.3	0.237	84.43	1.105
TC EC27 EXIT CH 27	678.7	0.375	61.80	0.809
TC EA36 EXIT ANN EF	683.8	0.190	66.89	0.876
TC EA27 EXIT ANN BC	681.0	0.133	64.09	0.839
TC EA28 EXIT ANN C	680.8	0.208	63.85	0.836

RESULTS FOR THERMOCOUPLES INSIDE HEATERS
FFM SERIES 2 TEST 12 RUN 103 DONE ON 32072 1533

DESCRIPTION	TEMP DEG F	STD DEV	RISE AB INLET T	NORMALIZED TEMP
TC R0118AB HTR 1 INT	764.8	0.148	147.85	1.935
TC R0219AB HTR 2 INT	758.9	0.468	141.97	1.858
TC R0418AB HTR 4 INT	793.3	0.350	176.42	2.309
TC R0518AB HTR 5 INT	761.3	0.230	144.33	1.889
TC R1019AB HEATER 10	743.4	1.313	126.50	1.656
TC R1218AB HEATER 12	729.1	1.148	112.18	1.468
TC R1318DE HEATER 13	767.2	0.230	150.27	1.967
TC R1418AB HEATER 14	755.0	0.135	138.05	1.807
TC R1518AB HEATER 15	758.8	0.326	141.91	1.858
TC R1618AB HEATER 16	769.2	0.257	152.30	1.994
TC R1718AB HEATER 17	755.0	0.238	138.13	1.808
TC R1817AB HEATER 18	733.3	0.133	116.36	1.523
TC R0118BC HEATER 1	777.3	0.257	160.39	2.099
TC R0118CD HEATER 1	789.6	0.267	172.72	2.261
TC R0118DE HEATER 1	779.6	0.247	162.65	2.129
TC R0219BC HEATER 2	759.7	0.208	142.76	1.869
TC R0418BC HEATER 4	774.5	0.236	157.62	2.063
TC R0418CD HEATER 4	764.7	0.233	147.78	1.934
TC R0418DE HEATER 4	763.8	0.247	146.85	1.922
TC R0518BC HEATER 5	762.4	0.299	145.44	1.904
TC R0518CD HEATER 5	764.0	0.345	147.11	1.926
TC R0718BC HEATER 7	764.9	0.734	147.94	1.936
TC R0718CD HEATER 7	763.3	0.174	146.36	1.916
TC R0718DE HEATER 7	758.6	0.277	141.70	1.855
TC R0818BC HEATER 8	772.0	0.190	155.07	2.030
TC R1019BC HEATER 10	742.0	2.296	125.11	1.638
TC R1718BC HEATER 17	757.4	0.194	140.45	1.838
TC R1918DE HEATER 19	759.4	0.649	142.52	1.866

OPERATING DATA FOR FFM SERIES 2 TEST 13 RUN 104
WHICH WAS DONE ON 31072 1347

DESCRIPTION	MEAN VALUE	STANDARD DEVIATION
HEATER 1 POWER KW	14.35	0.011
HEATER 8,18,19 POWER	0.0	0.0
HTR 12,13,14 POWER	-0.09	0.018
HTR 2,7,9,17 POWER	-0.06	0.022
HTR 4,5,11,15 POWER	-0.07	0.018
HTR 3,6,10,16 POWER	-0.12	0.0
TOTAL POWER	13.27	0.131
TEST SECT FLOW, GPM	11.29	0.102
TEST SECT INLET PR	10.23	0.073
TEST SECT OUTLET PR	6.22	0.043
TOTAL FLOW, GPM	26.33	0.301
PUMP OUTLET PR, PSI	9.30	0.058
PUMP SPEED, RPM	348.86	2.673
BLOWER SPEED, RPM	43.76	1.326
AIR FLOW (200 F) CFM	0.99	0.026
TC 313 TEST SECT IN	593.09	0.253
TC 317 TEST SECT OUT	624.75	0.273
TC 300 PUMP OUTLET	593.32	0.354
TC 318 RADIATOR IN	624.67	0.278
TC 334 RADIATOR OUT	596.17	0.920
TC 336 PUMP INLET	593.41	0.398
TC 332 RAD AIR IN	327.77	0.791
TC 331 RAD AIR OUT	327.75	2.258

HEAT BALANCE ON SODIUM FLOWING THROUGH BUNDLE
HEAT SUPPLIED BY DUMMY FUEL RODS = 49005.25 BTU/HR
HEAT ADDED TO SODIUM = 48361.27 BTU/HR
PERCENT HEAT BALANCE = 98.69

RESULTS FOR UNGROUNDED JUNCTION THERMOCOUPLES
FFM SERIES 2 TEST 13 RUN 104 DONE ON 31072 1347

DESCRIPTION	TEMP DEG F	STD DEV	RISE AB INLET T	NORMALIZED TEMP
TC 1504U CH 37	592.6	0.512	-0.45	-0.014
TC 1706U CH 21	598.3	0.174	5.16	0.161
TC 1807U CH 24	594.2	0.278	1.12	0.035
TC 1108U CH 31	593.4	0.278	0.30	0.009
TC 0409U CH 13	613.0	0.155	19.95	0.622
TC 0509U CH 3	644.7	0.196	51.58	1.608
TC 1009U CH 29	593.3	0.298	0.22	0.007
TC 1409U CH 17	595.3	0.278	2.18	0.068
TC 1609U CH 21	595.5	0.314	2.45	0.076
TC 1914U CH 24	594.1	0.253	1.04	0.032
TC 0815U CH 8	607.3	0.350	14.24	0.444
TC 1316U CH 35	597.6	0.095	4.52	0.141
TC 1516U CH 37	596.0	0.174	2.88	0.090
TC 0817U CH 9	610.4	0.278	17.28	0.539
TC 1217U CH 33	596.7	0.115	3.61	0.113
TC 1318U CH 34	596.6	0.213	3.51	0.109
TC 1718U CH 22	623.9	0.268	30.85	0.962
TC 1219U CH 32	597.1	0.350	4.02	0.125
TC 1819U CH 24	603.8	0.281	10.73	0.334
TC 1120U CH 31	599.4	0.326	6.31	0.197
TC 0421U CH 13	658.7	0.520	65.57	2.044
TC 0521U CH 3	694.3	0.634	101.25	3.156
TC 1021U CH 29	598.4	0.265	5.28	0.165
TC 1421U CH 17	606.7	0.239	13.57	0.423
TC 1621U CH 21	613.0	0.350	19.94	0.622

RESULTS FOR GROUNDED JUNCTION THERMOCOUPLES
FFM SERIES 2 TEST 13 RUN 104 DONE ON 31072 1347

DESCRIPTION	TEMP DEG F	STD DEV	RISE AB INLET T	NORMALIZED TEMP
TC 0118C CH 3	776.4	0.944	183.29	5.713
TC 0618D CH 4	690.3	0.922	97.22	3.030
TC 0618C CH 19	655.0	0.290	61.89	1.929
TC 0219A HEATER 2	663.7	0.784	70.61	2.201
TC 0219B CH 10	644.1	0.724	50.99	1.589
TC 0919A HTR 9 EXT	608.4	0.159	15.33	0.478
TC 0919B CH 29	602.2	0.175	9.11	0.284
TC 0718C CH 5	713.5	0.780	120.43	3.754
TC 0718D CH 6	732.0	1.592	138.89	4.329
TC 0319A HEATER 3	635.9	0.316	42.79	1.334
TC 0319B CH 12	626.0	0.265	32.90	1.026

RESULTS FOR DUCT WALL THERMOCOUPLES
FEM SERIES 2 TEST 13 RUN 104 DONE ON 31072 1347

DESCRIPTION	TEMP DEG F	STD DEV	RISE AB INLET T	NORMALIZED TEMP
TC D0B04 DUCT B	592.7	0.323	-0.40	-0.012
TC D0E04 DUCT E	593.1	0.179	0.06	0.002
TC D0F04 DUCT F	592.9	0.256	-0.14	-0.004
TC D0B08 DUCT B	593.1	0.288	0.0	0.0
TC D0D08 DUCT D	593.6	0.120	0.48	0.015
TC D0F08 DUCT F	593.1	0.354	-0.02	-0.001
TC D0B12 DUCT B	593.5	0.278	0.38	0.012
TC D0E12 DUCT E	593.8	0.155	0.75	0.023
TC D0F12 DUCT F	593.4	0.288	0.32	0.010
TC D0B16 DUCT B	596.4	0.256	3.36	0.105
TC D0D16 DUCT D	594.3	0.352	1.20	0.037
TC D0F16 DUCT F	594.6	0.278	1.52	0.047
TC D0B18 DUCT B	594.9	0.352	1.78	0.055
TC D0E18 DUCT E	595.6	0.278	2.50	0.078
TC DAB18 DUCT AB	595.9	0.237	2.86	0.089
TC DDE18 DUCT DE	594.9	0.278	1.80	0.056
TC DEF18 DUCT EF	595.4	0.253	2.30	0.072
TC D0F18 DUCT F	596.3	0.103	3.26	0.102
TC DFA18 DUCT FA	597.1	0.288	3.98	0.124
TC D0B21 DUCT B	597.7	0.242	4.64	0.145
TC D0D21 DUCT D	597.9	0.280	4.77	0.149
TC D0F21 DUCT F	599.7	0.265	6.58	0.205
TC D0B23 DUCT B	599.1	0.398	6.03	0.188
TC D0D23 DUCT D	599.8	0.290	6.69	0.209
TC D0F23 DUCT F	599.8	0.311	6.70	0.209

RESULTS FOR THERMOCOUPLES IN CHANNEL EXITS
FEM SERIES 2 TEST 13 RUN 104 DONE ON 31072 1347

DESCRIPTION	TEMP DEG F	STD DEV	RISE AB INLET T	NORMALIZED TEMP
TC EC03 EXIT CH 3	649.8	0.545	56.76	1.769
TC EC16 EXIT CH 16	613.1	0.780	20.01	0.624
TC EC17 EXIT CH 17	604.0	0.281	10.93	0.341
TC EC34 EXIT CH 34	602.4	0.179	9.30	0.290
TC EC35 EXIT CH 35	602.3	0.110	9.16	0.286
TC EC36 EXIT CH 36	604.2	0.385	11.11	0.346
TC EC06 EXIT CH 6	676.6	0.348	83.53	2.604
TC EC08 EXIT CH 8	606.8	0.331	13.68	0.426
TC EC27 EXIT CH 27	603.4	0.268	10.28	0.320
TC EA36 EXIT ANN EF	605.2	0.465	12.10	0.377
TC EA27 EXIT ANN BC	605.1	0.095	12.06	0.376
TC EA28 EXIT ANN C	605.5	0.261	12.39	0.386

RESULTS FOR THERMOCOUPLES INSIDE HEATERS
FFM SERIES 2 TEST 13 RUN 104 DONE ON 31072 1347

DESCRIPTION	TEMP DEG F	STD DEV	RISE AB INLET T	NORMALIZED TEMP
TC R0118AB HTR 1 INT	871.4	0.729	278.35	8.676
TC R0219AB HTR 2 INT	667.8	0.537	74.76	2.330
TC R0418AB HTR 4 INT	727.4	0.786	134.28	4.186
TC R0518AB HTR 5 INT	708.0	0.634	114.93	3.582
TC R1019AB HEATER 10	608.9	0.350	15.80	0.492
TC R1218AB HEATER 12	597.2	0.438	4.14	0.129
TC R1318DE HEATER 13	600.0	0.239	6.91	0.215
TC R1418AB HEATER 14	598.0	0.290	4.89	0.152
TC R1518AB HEATER 15	629.4	0.537	36.28	1.131
TC R1618AB HEATER 16	599.3	0.239	6.19	0.193
TC R1718AB HEATER 17	623.9	0.265	30.80	0.960
TC R1817AB HEATER 18	596.6	0.281	3.55	0.111
TC R0118BC HEATER 1	885.4	0.845	292.29	9.111
TC R0118CD HEATER 1	905.9	1.080	312.81	9.750
TC R0118DE HEATER 1	884.8	0.927	291.72	9.093
TC R0219BC HEATER 2	703.9	1.098	110.85	3.455
TC R0418BC HEATER 4	722.1	0.935	129.03	4.022
TC R0418CD HEATER 4	720.3	0.512	127.25	3.966
TC R0418DE HEATER 4	676.3	0.561	83.26	2.595
TC R0518BC HEATER 5	710.5	0.813	117.46	3.661
TC R0518CD HEATER 5	739.5	1.056	146.39	4.563
TC R0718BC HEATER 7	685.0	0.495	91.90	2.865
TC R0718CD HEATER 7	681.7	0.444	88.60	2.762
TC R0718DE HEATER 7	644.2	0.624	51.14	1.594
TC R0818BC HEATER 8	602.0	0.189	8.92	0.278
TC R1019BC HEATER 10	610.5	0.413	17.44	0.544
TC R1718BC HEATER 17	624.6	0.413	31.48	0.981
TC R1918DE HEATER 19	616.1	0.386	22.98	0.716

OPERATING DATA FOR FFM SERIES 2 TEST 13 RUN 204
WHICH WAS DONE ON 31072 1417

DESCRIPTION	MEAN VALUE	STANDARD DEVIATION
HEATER 1 POWER KW	-0.03	0.0
HEATER 8,18,19 POWER	0.0	0.0
HTR 12,13,14 POWER	-0.08	0.0
HTR 2,7,9,17 POWER	14.14	0.018
HTR 4,5,11,15 POWER	-0.08	0.0
HTR 3,6,10,16 POWER	-0.12	0.0
TOTAL POWER	13.36	0.107
TEST SECT FLOW, GPM	11.25	0.025
TEST SECT INLET PR	10.25	0.105
TEST SECT OUTLET PR	6.26	0.031
TOTAL FLOW, GPM	26.13	0.386
PUMP OUTLET PR, PSI	9.27	0.046
PUMP SPEED, RPM	345.50	1.221
BLOWER SPEED, RPM	43.18	1.523
AIR FLOW (200 F) CFM	0.99	0.008
TC 313 TEST SECT IN	605.01	0.155
TC 317 TEST SECT OUT	636.85	0.155
TC 300 PUMP OUTLET	605.00	0.418
TC 318 RADIATOR IN	636.61	0.052
TC 334 RADIATOR OUT	606.64	1.058
TC 336 PUMP INLET	604.56	0.311
TC 332 RAD AIR IN	334.34	1.621
TC 331 RAD AIR OUT	332.63	2.674

HEAT BALANCE ON SODIUM FLOWING THROUGH BUNDLE
HEAT SUPPLIED BY DUMMY FUEL RODS = 48288.10 BTU/HR
HEAT ADDED TO SODIUM = 48304.07 BTU/HR
PERCENT HEAT BALANCE = 100.03

RESULTS FOR UNGROUNDED JUNCTION THERMOCOUPLES
FFM SERIES 2 TEST 13 RUN 204 DONE ON 31072 1417

DESCRIPTION	TEMP DEG F	STD DEV	RISE AB INLET T	NORMALIZED TEMP
TC 1504U CH 37	605.2	0.258	0.22	0.007
TC 1706U CH 21	605.9	0.354	0.94	0.030
TC 1807U CH 24	608.4	0.155	3.44	0.108
TC 1108U CH 31	605.5	0.310	0.45	0.014
TC 0409U CH 13	608.8	0.360	3.84	0.121
TC 0509U CH 3	608.3	0.185	3.30	0.104
TC 1009U CH 29	606.8	0.258	1.82	0.057
TC 1409U CH 17	605.1	0.310	0.05	0.002
TC 1609U CH 21	605.4	0.405	0.40	0.013
TC 1914U CH 24	622.3	0.322	17.30	0.544
TC 0815U CH 8	692.8	0.354	87.74	2.757
TC 1316U CH 35	605.8	0.258	0.78	0.025
TC 1516U CH 37	605.9	0.310	0.91	0.029
TC 0817U CH 9	732.6	0.322	127.62	4.009
TC 1217U CH 33	605.4	0.155	0.42	0.013
TC 1318U CH 34	605.3	0.052	0.28	0.009
TC 1718U CH 22	620.8	0.155	15.78	0.496
TC 1219U CH 32	606.0	0.699	0.97	0.030
TC 1819U CH 24	646.3	0.574	41.33	1.298
TC 1120U CH 31	606.7	0.636	1.71	0.054
TC 0421U CH 13	630.1	0.540	25.09	0.788
TC 0521U CH 3	619.2	0.479	14.18	0.446
TC 1021U CH 29	610.5	0.430	5.45	0.171
TC 1421U CH 17	607.1	0.560	2.11	0.066
TC 1621U CH 21	614.3	0.540	9.25	0.291

RESULTS FOR GROUNDED JUNCTION THERMOCOUPLES
FFM SERIES 2 TEST 13 RUN 204 DONE ON 31072 1417

DESCRIPTION	TEMP DEG F	STD DEV	RISE AB INLET T	NORMALIZED TEMP
TC 0118C CH 3	638.5	0.443	33.45	1.051
TC 0618D CH 4	622.1	0.527	17.07	0.536
TC 0618C CH 19	615.7	0.745	10.73	0.337
TC 0219A HEATER 2	800.4	0.561	195.36	6.138
TC 0219B CH 10	764.9	0.527	159.91	5.024
TC 0919A HTR 9 EXT	651.4	0.733	46.39	1.457
TC 0919B CH 29	632.2	0.462	27.18	0.854
TC 0718C CH 5	690.5	0.723	85.51	2.686
TC 0718D CH 6	675.9	1.567	70.94	2.229
TC 0319A HEATER 3	629.0	0.574	23.97	0.753
TC 0319B CH 12	623.8	0.494	18.77	0.590

RESULTS FOR DUCT WALL THERMOCOUPLES
FEM SERIES 2 TEST 13 RUN 204 DONE ON 31072 1417

DESCRIPTION	TEMP DEG F	STD DEV	RISE AB INLET T	NORMALIZED TEMP
TC DOB04 DUCT B	606.7	0.258	0.70	0.022
TC DOF04 DUCT F	605.0	0.323	-0.02	-0.001
TC DOF04 DUCT F	605.1	0.297	0.08	0.003
TC DOB08 DUCT B	607.6	0.248	2.62	0.082
TC DOD08 DUCT D	605.0	0.155	0.04	0.001
TC DOF08 DUCT F	605.1	0.155	0.14	0.004
TC DOB12 DUCT B	617.6	0.155	12.64	0.397
TC DOF12 DUCT F	604.8	0.052	-0.24	-0.008
TC DOF12 DUCT F	605.4	0.052	0.36	0.011
TC DOB16 DUCT B	637.0	0.371	31.96	1.004
TC DOD16 DUCT D	606.0	0.052	1.00	0.031
TC DOF16 DUCT F	606.4	0.155	1.42	0.045
TC DOD18 DUCT D	606.3	0.299	1.28	0.040
TC DOE18 DUCT E	605.5	0.190	0.51	0.016
TC DAB18 DUCT AB	624.3	0.248	19.26	0.605
TC DDE18 DUCT DE	606.0	0.248	1.00	0.031
TC DEF18 DUCT EF	605.6	0.348	0.63	0.020
TC DOF18 DUCT F	606.0	0.052	0.98	0.031
TC DFA18 DUCT FA	608.9	0.258	3.92	0.123
TC DOB21 DUCT B	625.6	0.444	20.62	0.648
TC DOD21 DUCT D	607.8	0.443	2.77	0.087
TC DOF21 DUCT F	608.6	0.537	3.56	0.112
TC DOB23 DUCT B	629.8	0.325	24.77	0.778
TC DOD23 DUCT D	608.3	0.540	3.33	0.105
TC DOF23 DUCT F	614.0	0.521	9.02	0.283

RESULTS FOR THERMOCOUPLES IN CHANNEL EXITS
FEM SERIES 2 TEST 13 RUN 204 DONE ON 31072 1417

DESCRIPTION	TEMP DEG F	STD DEV	RISE AB INLET T	NORMALIZED TEMP
TC EC03 EXIT CH 3	617.7	0.601	12.69	0.399
TC EC16 EXIT CH 16	609.6	0.574	4.57	0.144
TC EC17 EXIT CH 17	608.4	0.350	3.38	0.106
TC EC34 EXIT CH 34	607.8	0.443	2.83	0.089
TC EC35 EXIT CH 35	608.5	0.560	3.51	0.110
TC EC36 EXIT CH 36	610.9	0.525	5.85	0.184
TC EC06 EXIT CH 6	680.6	0.560	75.55	2.374
TC EC08 EXIT CH 8	673.1	0.397	68.14	2.141
TC EC27 EXIT CH 27	630.5	0.866	25.48	0.801
TC EA36 EXIT ANN EF	609.9	0.647	4.89	0.154
TC EA27 EXIT ANN BC	632.1	1.004	27.10	0.851
TC EA28 EXIT ANN C	621.4	1.469	16.43	0.516

RESULTS FOR THERMOCOUPLES INSIDE HEATERS
FFM SERIES 2 TEST 13 RUN 204 DONE ON 31072 1417

DESCRIPTION	TEMP DEG F	STD DEV	RISE AB INLET T	NORMALIZED TEMP
TC R0118AB HTR 1 INT	644.9	0.323	39.90	1.254
TC R0219AB HTR 2 INT	854.0	0.649	249.04	7.824
TC R0418AB HTR 4 INT	637.8	0.479	32.78	1.030
TC R0518AB HTR 5 INT	619.0	0.673	13.98	0.439
TC R1019AB HEATER 10	636.4	0.495	31.37	0.986
TC R1218AB HEATER 12	606.0	0.693	1.04	0.033
TC R1318DE HEATER 13	606.3	0.550	1.33	0.042
TC R1418AB HEATER 14	606.1	0.560	1.13	0.036
TC R1518AB HEATER 15	611.3	0.699	6.29	0.198
TC R1618AB HEATER 16	608.1	0.430	3.13	0.098
TC R1718AB HEATER 17	622.7	0.479	17.68	0.555
TC R1817AB HEATER 18	623.2	0.697	18.15	0.570
TC R0118BC HEATER 1	640.8	0.405	35.78	1.124
TC R0118CD HEATER 1	642.6	0.435	37.62	1.182
TC R0118DE HEATER 1	662.0	0.369	57.00	1.791
TC R0219BC HEATER 2	856.6	0.465	251.62	7.905
TC R0418BC HEATER 4	626.4	0.322	21.40	0.672
TC R0418CD HEATER 4	626.9	0.369	21.88	0.687
TC R0418DE HEATER 4	614.9	0.213	9.92	0.312
TC R0518BC HEATER 5	618.4	0.620	13.44	0.422
TC R0518CD HEATER 5	625.4	0.369	20.36	0.640
TC R0718BC HEATER 7	710.4	0.103	105.41	3.312
TC R0718CD HEATER 7	713.7	0.620	108.72	3.416
TC R0718DE HEATER 7	736.7	0.550	131.70	4.138
TC R0818BC HEATER 8	675.8	0.354	70.84	2.226
TC R1019BC HEATER 10	624.3	0.376	19.26	0.605
TC R1718BC HEATER 17	623.2	0.323	18.18	0.571
TC R1918DE HEATER 19	731.5	0.276	126.48	3.974

OPERATING DATA FOR FFM SERIES 2 TEST 13 RUN 304
WHICH WAS DONE ON 31072 1452

DESCRIPTION	MEAN VALUE	STANDARD DEVIATION
HEATER 1 POWER KW	-0.03	0.0
HEATER 8,18,19 POWER	0.0	0.0
HTR 12,13,14 POWER	-0.09	0.016
HTR 2,7,9,17 POWER	-0.04	0.0
HTR 4,5,11,15 POWER	-0.08	0.0
HTR 3,6,10,16 POWER	14.35	0.016
TOTAL POWER	13.33	0.124
TEST SECT FLOW, GPM	11.19	0.069
TEST SECT INLET PR	10.21	0.081
TEST SECT OUTLET PR	6.26	0.049
TOTAL FLOW, GPM	26.01	0.225
PUMP OUTLET PR, PSI	9.24	0.068
PUMP SPEED, RPM	346.17	0.931
BLOWER SPEED, RPM	39.75	1.296
AIR FLOW (200 F) CFM	0.98	0.005
TC 313 TEST SECT IN	611.58	0.173
TC 317 TEST SECT OUT	643.48	0.251
TC 300 PUMP OUTLET	611.63	0.244
TC 318 RADIATOR IN	643.20	0.264
TC 334 RADIATOR OUT	613.57	1.014
TC 336 PUMP INLET	611.13	0.451
TC 332 RAD AIR IN	336.27	1.336
TC 331 RAD AIR OUT	344.21	7.245

HEAT BALANCE ON SODIUM FLOWING THROUGH BUNDLE
HEAT SUPPLIED BY DUMMY FUEL RODS = 49005.25 BTU/HR
HEAT ADDED TO SODIUM = 48053.38 BTU/HR
PERCENT HEAT BALANCE = 98.06

RESULTS FOR UNGROUNDED JUNCTION THERMOCOUPLES
FPM SERIES 2 TEST 13 RUN 304 DONE ON 31072 1452

DESCRIPTION	TEMP DEG F	STD DEV	RISE AB INLET T	NORMALIZED TEMP
TC 1504U CH 37	611.4	0.164	-0.14	-0.004
TC 1706U CH 21	611.3	0.357	-0.23	-0.007
TC 1807U CH 24	611.6	0.318	-0.02	-0.001
TC 1108U CH 31	619.4	0.311	7.84	0.241
TC 0409U CH 13	663.6	0.280	52.03	1.599
TC 0509U CH 3	621.4	0.432	9.80	0.301
TC 1009U CH 29	619.1	0.416	7.50	0.231
TC 1409U CH 17	611.6	0.397	-0.02	-0.001
TC 1609U CH 21	611.6	0.281	0.04	0.001
TC 1914U CH 24	613.3	0.289	1.75	0.054
TC 0815U CH 8	641.4	0.203	29.81	0.916
TC 1316U CH 35	613.7	0.321	2.12	0.065
TC 1516U CH 37	611.6	0.280	0.05	0.002
TC 0817U CH 9	659.4	0.356	47.87	1.471
TC 1217U CH 33	613.7	0.397	2.14	0.066
TC 1318U CH 34	612.7	0.173	1.12	0.034
TC 1718U CH 22	614.9	0.441	3.35	0.103
TC 1219U CH 32	614.9	0.435	3.37	0.104
TC 1819U CH 24	618.6	0.326	7.06	0.217
TC 1120U CH 31	637.3	1.353	25.72	0.791
TC 0421U CH 13	721.1	0.426	109.50	3.366
TC 0521U CH 3	634.7	0.435	23.09	0.710
TC 1021U CH 29	640.1	0.384	28.52	0.877
TC 1421U CH 17	613.9	0.337	2.29	0.070
TC 1621U CH 21	613.4	0.322	1.79	0.055

RESULTS FOR GROUNDED JUNCTION THERMOCOUPLES
FPM SERIES 2 TEST 13 RUN 304 DONE ON 31072 1452

DESCRIPTION	TEMP DEG F	STD DEV	RISE AB INLET T	NORMALIZED TEMP
TC 0118C CH 3	677.5	0.521	65.93	2.027
TC 0618D CH 4	622.0	0.616	10.38	0.319
TC 0618C CH 19	617.3	0.407	5.77	0.177
TC 0219A HEATER 2	728.2	0.420	116.64	3.585
TC 0219B CH 10	739.2	0.337	127.61	3.923
TC 0919A HTR 9 EXT	713.0	0.521	101.41	3.117
TC 0919B CH 29	676.4	0.423	64.79	1.992
TC 0718C CH 5	646.2	0.372	34.62	1.064
TC 0718D CH 6	641.8	1.339	30.20	0.928
TC 0319A HEATER 3	810.6	0.393	199.00	6.117
TC 0319B CH 12	778.7	0.495	167.10	5.136

RESULTS FOR DUCT WALL THERMOCOUPLES
FFM SERIES 2 TEST 13 RUN 304 DONE ON 31072 1452

DESCRIPTION	TEMP DEG F	STD DEV	RISE AB INLET T	NORMALIZED TEMP
TC DOB04 DUCT B	611.5	0.315	-0.08	-0.002
TC DOE04 DUCT E	611.6	0.321	0.02	0.001
TC DOF04 DUCT F	611.3	0.255	-0.27	-0.008
TC DOB08 DUCT B	612.0	0.311	0.46	0.014
TC DOD08 DUCT D	613.8	0.315	2.26	0.069
TC DOF08 DUCT F	611.3	0.215	-0.25	-0.008
TC DOB12 DUCT B	613.4	0.237	1.86	0.057
TC DOE12 DUCT E	611.7	0.237	0.14	0.004
TC DOF12 DUCT F	611.4	0.224	-0.16	-0.005
TC DOB16 DUCT B	618.6	0.331	7.02	0.216
TC DOD16 DUCT D	615.6	0.315	3.98	0.122
TC DOF16 DUCT F	611.8	0.340	0.17	0.005
TC DOD18 DUCT D	618.5	0.340	6.89	0.212
TC DOE18 DUCT E	612.9	0.224	1.34	0.041
TC DAB18 DUCT AB	615.7	0.289	4.10	0.126
TC DDE18 DUCT DE	614.7	0.277	3.14	0.097
TC DEF18 DUCT EF	611.8	0.156	0.20	0.006
TC DOF18 DUCT F	611.8	0.148	0.17	0.005
TC DFA18 DUCT FA	612.2	0.251	0.58	0.018
TC DOB21 DUCT B	629.3	0.337	17.77	0.546
TC DOD21 DUCT D	627.7	0.426	16.08	0.494
TC DOF21 DUCT F	612.0	0.466	0.38	0.012
TC DOB23 DUCT B	630.1	0.462	18.48	0.568
TC DOD23 DUCT D	633.0	0.263	21.45	0.659
TC DOF23 DUCT F	613.1	0.465	1.56	0.048

RESULTS FOR THERMOCOUPLES IN CHANNEL EXITS
FFM SERIES 2 TEST 13 RUN 304 DONE ON 31072 1452

DESCRIPTION	TEMP DEG F	STD DEV	RISE AB INLET T	NORMALIZED TEMP
TC EC03 EXIT CH 3	625.9	0.529	14.30	0.440
TC EC16 EXIT CH 16	622.9	0.416	11.36	0.349
TC EC17 EXIT CH 17	613.9	0.472	2.37	0.073
TC EC34 EXIT CH 34	615.6	0.462	4.02	0.124
TC EC35 EXIT CH 35	613.6	0.356	2.04	0.063
TC EC36 EXIT CH 36	614.7	0.309	3.09	0.095
TC EC06 EXIT CH 6	634.4	0.516	22.79	0.701
TC EC08 EXIT CH 8	635.0	0.155	23.39	0.719
TC EC27 EXIT CH 27	639.4	0.407	27.84	0.856
TC EA36 EXIT ANN EF	614.9	0.267	3.35	0.103
TC EA27 EXIT ANN BC	639.3	0.637	27.77	0.854
TC EA28 EXIT ANN C	636.1	0.559	24.55	0.755

RESULTS FOR THERMOCOUPLES INSIDE HEATERS
FRM SERIES 2 TEST 13 RUN 304 DONE ON 31072 1452

DESCRIPTION	TEMP DEG F	STD DEV	RISE AB INLET T	NORMALIZED TEMP
TC R0118AB HTR 1 INT	645.4	0.274	33.86	1.041
TC R0219AB HTR 2 INT	653.8	0.378	42.25	1.299
TC R0418AB HTR 4 INT	707.7	0.651	96.10	2.954
TC R0518AB HTR 5 INT	646.1	0.354	34.52	1.061
TC R1019AB HEATER 10	739.2	0.776	127.58	3.922
TC R1218AB HEATER 12	613.2	1.121	1.62	0.050
TC R1318DE HEATER 13	613.6	0.302	2.01	0.062
TC R1418AB HEATER 14	612.0	0.443	0.38	0.012
TC R1518AB HEATER 15	614.6	0.195	3.02	0.093
TC R1618AB HEATER 16	612.0	0.486	0.39	0.012
TC R1718AB HEATER 17	615.2	0.522	3.66	0.113
TC R1817AB HEATER 18	613.5	0.322	1.95	0.060
TC R0118BC HEATER 1	663.8	0.374	52.24	1.606
TC R0118CD HEATER 1	667.3	0.437	55.72	1.713
TC R0118DE HEATER 1	708.5	0.416	96.93	2.980
TC R0219BC HEATER 2	666.2	0.312	54.60	1.678
TC R0418BC HEATER 4	680.4	0.310	68.85	2.116
TC R0418CD HEATER 4	680.0	0.353	68.38	2.102
TC R0418DE HEATER 4	649.6	0.195	37.99	1.168
TC R0518BC HEATER 5	645.4	0.353	33.86	1.041
TC R0518CD HEATER 5	638.0	0.393	26.44	0.813
TC R0718BC HEATER 7	648.3	0.632	36.70	1.128
TC R0718CD HEATER 7	649.5	0.227	37.88	1.164
TC R0718DE HEATER 7	647.2	0.409	35.66	1.096
TC R0818BC HEATER 8	645.4	0.235	33.79	1.039
TC R1019BC HEATER 10	750.2	0.441	138.65	4.262
TC R1718BC HEATER 17	615.2	0.337	3.59	0.110
TC R1918DE HEATER 19	646.6	0.569	35.06	1.078

OPERATING DATA FOR FFM SERIES 2 TEST 13 RUN 404
WHICH WAS DONE ON 31372 1311

DESCRIPTION	MEAN VALUE	STANDARD DEVIATION
HEATER 1 POWER KW	-0.03	0.0
HEATER 8,18,19 POWER	0.0	0.0
HTR 12,13,14 POWER	-0.08	0.0
HTR 2,7,9,17 POWER	-0.02	0.022
HTR 4,5,11,15 POWER	14.28	0.055
HTR 3,6,10,16 POWER	-0.12	0.0
TOTAL POWER	13.21	0.098
TEST SECT FLOW, GPM	11.54	0.046
TEST SECT INLET PR	10.34	0.098
TEST SECT OUTLET PR	6.28	0.050
TOTAL FLOW, GPM	26.57	0.244
PUMP OUTLET PR, PSI	8.80	0.055
PUMP SPEED, RPM	363.03	1.086
BLOWER SPEED, RPM	-1.88	0.069
AIR FLOW (200 F) CFM	0.99	0.005
TC 313 TEST SECT IN	598.69	0.134
TC 317 TEST SECT OUT	630.14	0.254
TC 300 PUMP OUTLET	603.02	0.567
TC 318 RADIATOR IN	629.87	2.263
TC 334 RADIATOR OUT	592.10	0.366
TC 336 PUMP INLET	596.31	0.303
TC 332 RAD AIR IN	322.54	1.316
TC 331 RAD AIR OUT	356.69	16.529

HEAT BALANCE ON SODIUM FLOWING THROUGH BUNDLE
HEAT SUPPLIED BY DUMMY FUEL RODS = 48766.20 BTU/HR
HEAT ADDED TO SODIUM = 49021.62 BTU/HR
PERCENT HEAT BALANCE = 100.52

RESULTS FOR UNGROUNDED JUNCTION THERMOCOUPLES
FEM SERIES 2 TEST 13 RUN 404 DONE ON 31372 1311

DESCRIPTION	TEMP DEG F	STD DEV	RISE AB INLET T	NORMALIZED TEMP
TC 1504U CH 37	598.4	0.296	-0.26	-0.008
TC 1706U CH 21	598.9	0.148	0.24	0.008
TC 1807U CH 24	598.5	0.151	-0.16	-0.005
TC 1108U CH 31	609.1	0.330	10.41	0.333
TC 0409U CH 13	728.2	0.568	129.55	4.141
TC 0509U CH 3	668.8	0.383	70.10	2.241
TC 1009U CH 29	600.5	0.148	1.78	0.057
TC 1409U CH 17	603.5	0.317	4.83	0.154
TC 1609U CH 21	598.7	0.246	0.04	0.001
TC 1914U CH 24	599.0	0.093	0.31	0.010
TC 0815U CH 8	601.3	0.312	2.63	0.084
TC 1316U CH 35	620.1	0.335	21.38	0.683
TC 1516U CH 37	600.0	0.169	1.29	0.041
TC 0817U CH 9	606.4	0.118	7.67	0.245
TC 1217U CH 33	626.6	0.335	27.93	0.893
TC 1318U CH 34	608.3	0.147	9.66	0.309
TC 1718U CH 22	601.6	0.208	2.89	0.092
TC 1219U CH 32	624.2	0.514	25.53	0.816
TC 1819U CH 24	600.2	0.390	1.47	0.047
TC 1120U CH 31	637.4	1.018	38.70	1.237
TC 0421U CH 13	757.4	0.629	158.73	5.074
TC 0521U CH 3	688.0	0.363	89.35	2.856
TC 1021U CH 29	622.3	0.355	23.66	0.756
TC 1421U CH 17	616.2	0.421	17.55	0.561
TC 1621U CH 21	600.7	0.470	2.01	0.064

RESULTS FOR GROUNDED JUNCTION THERMOCOUPLES
FEM SERIES 2 TEST 13 RUN 404 DONE ON 31372 1311

DESCRIPTION	TEMP DEG F	STD DEV	RISE AB INLET T	NORMALIZED TEMP
TC 0118C CH 3	719.2	0.612	120.53	3.853
TC 0618D CH 4	623.4	0.379	24.72	0.790
TC 0618C CH 19	614.5	0.467	15.80	0.505
TC 0219A HEATER 2	623.3	0.526	24.56	0.785
TC 0219B CH 10	622.7	0.526	24.04	0.768
TC 0919A HTR 9 EXT	620.3	0.247	21.65	0.692
TC 0919B CH 29	618.0	0.344	19.27	0.616
TC 0718C CH 5	616.0	0.506	17.34	0.554
TC 0718D CH 6	615.3	1.322	16.58	0.530
TC 0319A HEATER 3	674.3	0.726	75.65	2.418
TC 0319B CH 12	663.0	0.564	64.29	2.055

RESULTS FOR DUCT WALL THERMOCOUPLES
FFM SERIES 2 TEST 13 RUN 404 DONE ON 31372 1311

DESCRIPTION	TEMP DEG F	STD DEV	RISE AB INLET T	NORMALIZED TEMP
TC DOB04 DUCT B	598.8	0.260	0.08	0.003
TC DOE04 DUCT E	599.0	0.178	0.29	0.009
TC DOF04 DUCT F	598.8	0.206	0.14	0.004
TC DOB08 DUCT B	598.6	0.295	-0.06	-0.002
TC DOD08 DUCT D	604.7	0.147	6.02	0.192
TC DOF08 DUCT F	598.8	0.230	0.06	0.002
TC DOB12 DUCT B	598.9	0.230	0.22	0.007
TC DOE12 DUCT E	602.6	0.225	3.90	0.125
TC DOF12 DUCT F	599.2	0.201	0.52	0.017
TC DOB16 DUCT B	599.7	0.133	0.97	0.031
TC DOD16 DUCT D	611.6	0.271	12.94	0.414
TC DOF16 DUCT F	599.5	0.188	0.80	0.026
TC DOD18 DUCT D	619.5	0.151	20.84	0.666
TC DOE18 DUCT E	610.1	0.254	11.37	0.363
TC DAB18 DUCT AB	599.7	0.150	0.99	0.032
TC DDE18 DUCT DE	613.9	0.214	15.19	0.486
TC DEF18 DUCT EF	602.7	0.178	4.01	0.128
TC DOF18 DUCT F	599.9	0.192	1.19	0.038
TC DFA18 DUCT FA	599.8	0.148	1.16	0.037
TC DOB21 DUCT B	606.1	0.354	7.42	0.237
TC DOD21 DUCT D	628.6	0.392	29.93	0.957
TC DOF21 DUCT F	600.4	0.390	1.71	0.055
TC DOB23 DUCT B	607.4	0.373	8.69	0.278
TC DOD23 DUCT D	635.8	0.450	37.16	1.188
TC DOF23 DUCT F	600.8	0.469	2.15	0.069

RESULTS FOR THERMOCOUPLES IN CHANNEL EXITS
FFM SERIES 2 TEST 13 RUN 404 DONE ON 31372 1311

DESCRIPTION	TEMP DEG F	STD DEV	RISE AB INLET T	NORMALIZED TEMP
TC EC03 EXIT CH 3	635.1	0.698	36.45	1.165
TC EC16 EXIT CH 16	633.3	0.607	34.58	1.105
TC EC17 EXIT CH 17	610.3	0.432	11.65	0.372
TC EC34 EXIT CH 34	617.8	0.403	19.15	0.612
TC EC35 EXIT CH 35	604.8	0.360	6.16	0.197
TC EC36 EXIT CH 36	603.5	0.373	4.81	0.154
TC EC06 EXIT CH 6	613.8	0.466	15.14	0.484
TC EC08 EXIT CH 8	609.6	0.237	10.91	0.349
TC EC27 EXIT CH 27	619.9	0.450	21.18	0.677
TC EA36 EXIT ANN EF	605.3	0.271	6.65	0.213
TC EA27 EXIT ANN BC	620.6	0.130	21.90	0.700
TC EA28 EXIT ANN C	625.7	0.445	27.04	0.864

RESULTS FOR THERMOCOUPLES INSIDE HEATERS
FFM SERIES 2 TEST 13 RUN 4C4 DONE ON 31372 1311

DESCRIPTION	TEMP DEG F	STD DEV	RISE AB INLET T	NORMALIZED TEMP
TC R0118AB HTR 1 INT	644.7	0.397	45.98	1.470
TC R0219AB HTR 2 INT	611.6	0.498	12.89	0.412
TC R0418AB HTR 4 INT	909.3	1.033	310.65	9.929
TC R0518AB HTR 5 INT	708.5	0.382	109.78	3.509
TC R1019AB HEATER 10	625.7	0.384	27.01	0.863
TC R1218AB HEATER 12	626.5	0.862	27.80	0.889
TC R1318DE HEATER 13	624.5	0.472	25.85	0.826
TC R1418AB HEATER 14	604.5	0.279	5.84	0.187
TC R1518AB HEATER 15	607.5	0.295	8.79	0.281
TC R1618AB HEATER 16	599.2	0.336	0.52	0.017
TC R1718AB HEATER 17	601.1	0.483	2.43	0.078
TC R1817AB HEATER 18	599.1	0.497	0.43	0.014
TC R0118BC HEATER 1	679.1	0.270	80.44	2.571
TC R0118CD HEATER 1	681.0	0.360	82.34	2.632
TC R0118DE HEATER 1	701.5	0.428	102.80	3.286
TC R0219BC HEATER 2	617.3	0.305	18.57	0.594
TC R0418BC HEATER 4	878.5	0.644	279.79	8.943
TC R0418CD HEATER 4	867.0	0.624	268.33	3.577
TC R0418DE HEATER 4	875.8	0.615	277.12	8.858
TC R0518BC HEATER 5	705.5	0.164	106.83	3.415
TC R0518CD HEATER 5	656.2	0.479	57.47	1.837
TC R0718BC HEATER 7	613.9	0.287	15.19	0.486
TC R0718CD HEATER 7	613.3	0.234	14.58	0.466
TC R0718DE HEATER 7	608.8	0.442	10.15	0.324
TC R0818BC HEATER 8	605.3	0.303	6.58	0.210
TC R1019BC HEATER 10	635.3	0.174	36.63	1.171
TC R1718BC HEATER 17	601.8	0.286	3.12	0.100
TC R1918DE HEATER 19	606.0	0.651	7.35	0.235

OPERATING DATA FOR FFM SERIES 2 TEST 13 RUN 504
WHICH WAS DONE ON 31372 1336

DESCRIPTION	MEAN VALUE	STANDARD DEVIATION
HEATER 1 POWER KW	-0.03	0.009
HEATER 8,18,19 POWER	0.0	0.0
HTR 12,13,14 POWER	-0.08	0.0
HTR 2,7,9,17 POWER	-0.02	0.022
HTR 4,5,11,15 POWER	14.42	0.018
HTR 3,6,10,16 POWER	-0.12	0.0
TOTAL POWER	13.41	0.0
TEST SECT FLOW, GPM	11.53	0.028
TEST SECT INLET PR	10.33	0.082
TEST SECT OUTLET PR	6.28	0.037
TOTAL FLOW, GPM	26.45	0.195
PUMP OUTLET PR, PSI	8.75	0.107
PUMP SPEED, RPM	363.02	0.657
BLOWER SPEED, RPM	-2.02	0.0
AIR FLOW (200 F) CFM	0.98	0.010
TC 313 TEST SECT IN	605.60	0.200
TC 317 TEST SECT OUT	637.53	0.410
TC 300 PUMP OUTLET	611.01	0.253
TC 318 RADIATOR IN	637.02	0.276
TC 334 RADIATOR OUT	602.53	3.165
TC 336 PUMP INLET	604.74	1.326
TC 332 RAD AIR IN	326.74	3.770
TC 331 RAD AIR OUT	295.72	5.975

HEAT BALANCE ON SODIUM FLOWING THROUGH BUNDLE
HEAT SUPPLIED BY DUMMY FUEL RODS = 49244.30 BTU/HR
HEAT ADDED TO SODIUM = 49637.88 BTU/HR
PERCENT HEAT BALANCE = 100.80

RESULTS FOR UNGROUNDED JUNCTION THERMOCOUPLES
FEM SERIES 2 TEST 13 RUN 504 DONE ON 31372 1336

DESCRIPTION	TEMP DEG F	STD DEV	RISE AB INLET T	NORMALIZED TEMP
TC 1504U CH 37	607.5	0.205	1.93	0.061
TC 1706U CH 21	606.8	0.325	1.17	0.037
TC 1807U CH 24	605.4	0.322	-0.16	-0.005
TC 1108U CH 31	605.7	0.449	0.07	0.002
TC 0409U CH 13	618.1	0.443	12.53	0.396
TC 0509U CH 3	728.4	0.387	122.76	3.875
TC 1009U CH 29	605.3	0.436	-0.25	-0.008
TC 1409U CH 17	642.4	0.291	36.84	1.163
TC 1609U CH 21	607.9	0.200	2.26	0.071
TC 1914U CH 24	605.6	0.410	0.01	0.000
TC 0815U CH 8	606.5	0.276	0.92	0.029
TC 1316U CH 35	645.6	0.460	39.98	1.262
TC 1516U CH 37	616.5	0.220	10.92	0.345
TC 0817U CH 9	608.1	0.276	2.48	0.078
TC 1217U CH 33	636.6	0.410	31.03	0.980
TC 1318U CH 34	645.9	0.276	40.30	1.272
TC 1718U CH 22	616.3	0.457	10.69	0.337
TC 1219U CH 32	634.5	0.410	28.94	0.914
TC 1819U CH 24	606.1	0.430	0.53	0.017
TC 1120U CH 31	622.8	1.190	17.21	0.543
TC 0421U CH 13	650.2	0.413	44.57	1.407
TC 0521U CH 3	799.4	0.393	193.83	6.119
TC 1021U CH 29	615.4	0.479	9.83	0.310
TC 1421U CH 17	689.7	0.413	84.07	2.654
TC 1621U CH 21	613.5	0.419	7.93	0.250

RESULTS FOR GROUNDED JUNCTION THERMOCOUPLES
FEM SERIES 2 TEST 13 RUN 504 DONE ON 31372 1336

DESCRIPTION	TEMP DEG F	STD DEV	RISE AB INLET T	NORMALIZED TEMP
TC 0118C CH 3	720.6	0.531	114.96	3.629
TC 0618D CH 4	747.8	0.390	142.21	4.489
TC 0618C CH 19	716.3	0.718	110.68	3.494
TC 0219A HEATER 2	615.4	0.538	9.77	0.308
TC 0219B CH 10	613.1	0.506	7.55	0.238
TC 0919A HTR 9 EXT	610.4	0.410	4.76	0.150
TC 0919B CH 29	610.5	0.413	4.89	0.154
TC 0718C CH 5	625.9	0.269	20.29	0.641
TC 0718D CH 6	631.9	0.744	26.34	0.832
TC 0319A HEATER 3	621.5	0.241	15.90	0.502
TC 0319B CH 12	618.7	0.478	13.09	0.413

RESULTS FOR DUCT WALL THERMOCOUPLES
FFM SERIES 2 TEST 13 RUN 504 DONE ON 31372 1336

DESCRIPTION	TEMP DEG F	STD DEV	RISE AB INLET T	NORMALIZED TEMP
TC DOB04 DUCT B	605.7	0.200	0.08	0.003
TC DOE04 DUCT E	606.4	0.304	0.77	0.024
TC DOF04 DUCT F	605.8	0.388	0.21	0.007
TC DOB08 DUCT B	605.5	0.304	-0.11	-0.003
TC DOD08 DUCT D	606.0	0.386	0.40	0.013
TC DOF08 DUCT F	608.3	0.233	2.67	0.084
TC DOB12 DUCT B	605.5	0.261	-0.13	-0.004
TC DOE12 DUCT E	615.7	0.401	10.08	0.318
TC DOF12 DUCT F	607.0	0.270	1.42	0.045
TC DOB16 DUCT B	605.3	0.479	-0.27	-0.009
TC DOD16 DUCT D	616.8	0.266	11.20	0.354
TC DOF16 DUCT F	612.1	0.318	6.47	0.204
TC DOD18 DUCT D	619.2	0.261	13.61	0.430
TC DOE18 DUCT E	633.8	0.173	28.23	0.891
TC DAB18 DUCT AB	606.2	0.370	0.63	0.020
TC DDE18 DUCT DE	626.4	0.261	20.83	0.658
TC DEF18 DUCT EF	623.1	0.264	17.47	0.552
TC DOF18 DUCT F	617.5	0.182	11.93	0.377
TC DFA18 DUCT FA	610.3	0.233	4.73	0.149
TC DOB21 DUCT B	607.3	0.413	1.67	0.053
TC DOD21 DUCT D	622.5	0.479	16.87	0.533
TC DOF21 DUCT F	616.8	0.413	11.17	0.353
TC DOB23 DUCT B	607.8	0.241	2.16	0.068
TC DOD23 DUCT D	626.3	0.271	20.66	0.652
TC DOF23 DUCT F	612.8	0.405	7.23	0.228

RESULTS FOR THERMOCOUPLES IN CHANNEL EXITS
FFM SERIES 2 TEST 13 RUN 504 DONE ON 31372 1336

DESCRIPTION	TEMP DEG F	STD DEV	RISE AB INLET T	NORMALIZED TEMP
TC EC03 EXIT CH 3	728.7	0.315	123.10	3.886
TC EC16 EXIT CH 16	692.0	0.645	86.41	2.728
TC EC17 EXIT CH 17	642.6	0.641	36.96	1.167
TC EC34 EXIT CH 34	639.3	0.957	33.67	1.063
TC EC35 EXIT CH 35	631.1	0.624	25.54	0.806
TC EC36 EXIT CH 36	622.6	0.630	17.01	0.537
TC EC06 EXIT CH 6	627.9	1.243	22.30	0.704
TC EC08 EXIT CH 8	610.3	0.414	4.74	0.150
TC EC27 EXIT CH 27	619.0	0.683	13.43	0.424
TC EA36 EXIT ANN EF	628.4	0.727	22.81	0.720
TC EA27 EXIT ANN BC	620.0	0.690	14.42	0.455
TC EA28 EXIT ANN C	628.7	1.156	23.06	0.728

RESULTS FOR THERMOCOUPLES INSIDE HEATERS
FFM SERIES 2 TEST 13 RUN 504 DONE ON 31372 1336

DESCRIPTION	TEMP DEG F	STD DEV	RISE AB INLET T	NORMALIZED TEMP
TC R0118AB HTR 1 INT	715.5	0.261	109.94	3.471
TC R0219AB HTR 2 INT	614.2	0.360	8.57	0.271
TC R0418AB HTR 4 INT	684.6	0.286	79.04	2.495
TC R0518AB HTR 5 INT	864.4	0.242	258.77	8.169
TC R1019AB HEATER 10	611.0	0.425	5.36	0.169
TC R1218AB HEATER 12	631.6	1.106	26.02	0.821
TC R1318DE HEATER 13	652.5	0.608	46.86	1.479
TC R1418AB HEATER 14	634.4	0.347	28.77	0.908
TC R1518AB HEATER 15	678.9	0.423	73.33	2.315
TC R1618AB HEATER 16	609.4	0.407	3.83	0.121
TC R1718AB HEATER 17	615.4	0.489	9.76	0.308
TC R1817AB HEATER 18	605.5	0.413	-0.05	-0.002
TC R0118BC HEATER 1	721.0	0.454	115.45	3.645
TC R0118CD HEATER 1	718.1	0.466	112.55	3.553
TC R0118DE HEATER 1	679.5	0.444	73.94	2.334
TC R0219BC HEATER 2	619.2	0.458	13.59	0.429
TC R0418BC HEATER 4	709.3	0.562	103.68	3.273
TC R0418CD HEATER 4	711.0	0.318	105.38	3.327
TC R0418DE HEATER 4	730.6	0.473	124.98	3.945
TC R0518BC HEATER 5	865.1	0.334	259.49	8.192
TC R0518CD HEATER 5	862.0	0.514	256.39	8.094
TC R0718BC HEATER 7	620.1	0.342	14.54	0.459
TC R0718CD HEATER 7	619.1	0.528	13.52	0.427
TC R0718DE HEATER 7	612.0	0.537	6.45	0.204
TC R0818BC HEATER 8	606.4	0.618	0.85	0.027
TC R1019BC HEATER 10	612.8	0.550	7.20	0.227
TC R1718BC HEATER 17	615.8	0.458	10.23	0.323
TC R1918DE HEATER 19	607.1	0.468	1.50	0.047

OPERATING DATA FOR FFM SERIES 2 TEST 13 RUN 604
WHICH WAS DONE ON 31372 1358

DESCRIPTION	MEAN VALUE	STANDARD DEVIATION
HEATER 1 POWER KW	-0.03	0.0
HEATER 8,18,19 POWER	0.0	0.0
HTR 12,13,14 POWER	-0.07	0.018
HTR 2,7,9,17 POWER	-0.02	0.022
HTR 4,5,11,15 POWER	-0.06	0.022
HTR 3,6,10,16 POWER	14.43	0.018
TOTAL POWER	13.41	0.0
TEST SECT FLOW, GPM	11.56	0.049
TEST SECT INLET PR	10.29	0.042
TEST SECT OUTLET PR	6.26	0.029
TOTAL FLOW, GPM	26.37	0.390
PUMP OUTLET PR, PSI	8.76	0.049
PUMP SPEED, RPM	362.64	2.010
BLOWER SPEED, RPM	-2.43	0.093
AIR FLOW (200 F) CFM	0.98	0.008
TC 313 TEST SECT IN	613.95	0.631
TC 317 TEST SECT OUT	646.65	0.476
TC 300 PUMP OUTLET	619.27	0.233
TC 318 RADIATOR IN	645.85	0.597
TC 334 RADIATOR OUT	609.16	2.386
TC 336 PUMP INLET	612.12	0.704
TC 332 RAD AIR IN	329.76	2.118
TC 331 RAD AIR OUT	301.27	1.352

HEAT BALANCE ON SODIUM FLOWING THROUGH BUNDLE
HEAT SUPPLIED BY DUMMY FUEL RODS = 49278.45 BTU/HR
HEAT ADDED TO SODIUM = 50857.40 BTU/HR
PERCENT HEAT BALANCE = 103.20

RESULTS FOR UNGROUNDED JUNCTION THERMOCOUPLES
FFM SERIES 2 TEST 13 RUN 604 DONE ON 31372 1358

DESCRIPTION	TEMP DEG F	STD DEV	RISE AB INLET T	NORMALIZED TEMP
TC 1504U CH 37	615.1	0.588	1.12	0.035
TC 1706U CH 21	678.8	0.672	64.90	2.048
TC 1807U CH 24	616.9	0.520	2.93	0.092
TC 1108U CH 31	613.9	0.623	0.0	0.0
TC 0409U CH 13	615.2	0.535	1.23	0.039
TC 0509U CH 3	637.7	0.617	23.72	0.749
TC 1009U CH 29	614.1	0.333	0.16	0.005
TC 1409U CH 17	619.3	0.524	5.39	0.170
TC 1609U CH 21	655.4	0.631	41.46	1.309
TC 1914U CH 24	614.8	0.631	0.88	0.028
TC 0815U CH 8	615.3	0.541	1.32	0.042
TC 1316U CH 35	625.8	0.742	11.89	0.375
TC 1516U CH 37	649.8	0.453	35.90	1.133
TC 0817U CH 9	616.1	0.524	2.11	0.067
TC 1217U CH 33	621.2	0.485	7.29	0.230
TC 1318U CH 34	626.6	0.742	12.69	0.401
TC 1718U CH 22	711.0	0.500	97.08	3.064
TC 1219U CH 32	621.3	0.534	7.32	0.231
TC 1819U CH 24	620.2	0.563	6.24	0.197
TC 1120U CH 31	616.5	1.215	2.59	0.082
TC 0421U CH 13	626.2	0.563	12.28	0.388
TC 0521U CH 3	661.7	0.569	47.79	1.508
TC 1021U CH 29	616.0	0.607	2.01	0.063
TC 1421U CH 17	652.0	0.676	38.07	1.202
TC 1621U CH 21	709.1	0.474	95.11	3.002

RESULTS FOR GROUNDED JUNCTION THERMOCOUPLES
FFM SERIES 2 TEST 13 RUN 604 DONE ON 31372 1358

DESCRIPTION	TEMP DEG F	STD DEV	RISE AB INLET T	NORMALIZED TEMP
TC 0118C CH 3	665.0	0.851	51.05	1.611
TC 0618D CH 4	807.4	0.601	193.43	6.105
TC 0618C CH 19	796.0	0.775	182.10	5.747
TC 0219A HEATER 2	624.2	0.557	10.21	0.322
TC 0219B CH 10	620.7	0.672	6.71	0.212
TC 0919A HTR 9 EXT	615.6	0.607	1.67	0.053
TC 0919B CH 29	615.0	0.680	1.07	0.034
TC 0718C CH 5	680.1	0.784	66.15	2.088
TC 0718D CH 6	702.2	1.499	88.27	2.786
TC 0319A HEATER 3	619.0	0.629	5.08	0.160
TC 0319B CH 12	617.5	0.682	3.60	0.114

RESULTS FOR DUCT WALL THERMOCOUPLES
FFM SERIES 2 TEST 13 RUN 604 DONE ON 31372 1358

DESCRIPTION	TEMP DEG F	STD DEV	RISE AB INLET T	NORMALIZED TEMP
TC D0B04 DUCT B	614.0	0.520	0.10	0.003
TC D0F04 DUCT F	614.2	0.511	0.28	0.009
TC D0F04 DUCT F	614.7	0.464	0.74	0.023
TC D0B08 DUCT B	614.2	0.430	0.28	0.009
TC D0D08 DUCT D	614.3	0.651	0.38	0.012
TC D0F08 DUCT F	619.2	0.549	5.26	0.166
TC D0B12 DUCT B	614.7	0.563	0.71	0.022
TC D0E12 DUCT E	617.1	0.538	3.16	0.100
TC D0F12 DUCT F	622.3	0.485	8.33	0.263
TC D0B16 DUCT B	615.8	0.342	1.84	0.058
TC D0D16 DUCT D	616.2	0.464	2.22	0.070
TC D0F16 DUCT F	638.1	0.476	24.12	0.761
TC D0D18 DUCT D	617.5	0.540	3.56	0.112
TC D0E18 DUCT E	625.8	0.541	11.80	0.372
TC DAB18 DUCT AB	619.8	0.709	5.83	0.184
TC DDE18 DUCT DE	620.5	0.466	6.52	0.206
TC DEF18 DUCT EF	634.0	0.651	20.02	0.632
TC D0F18 DUCT F	647.5	0.651	33.56	1.059
TC DFA18 DUCT FA	643.7	0.651	29.72	0.938
TC D0B21 DUCT B	615.6	0.478	1.67	0.053
TC D0D21 DUCT D	618.3	0.563	4.34	0.137
TC D0F21 DUCT F	655.8	0.680	41.85	1.321
TC D0B23 DUCT B	616.1	0.530	2.17	0.068
TC D0D23 DUCT D	619.1	0.724	5.12	0.162
TC D0F23 DUCT F	641.0	0.530	27.07	0.854

RESULTS FOR THERMOCOUPLES IN CHANNEL EXITS
FFM SERIES 2 TEST 13 RUN 604 DONE ON 31372 1358

DESCRIPTION	TEMP DEG F	STD DEV	RISE AB INLET T	NORMALIZED TEMP
TC EC03 EXIT CH 3	666.7	2.125	52.78	1.666
TC EC16 EXIT CH 16	655.4	0.860	41.41	1.307
TC EC17 EXIT CH 17	654.4	0.686	40.43	1.276
TC EC34 EXIT CH 34	642.0	0.372	28.10	0.887
TC EC35 EXIT CH 35	653.2	0.608	39.28	1.240
TC EC36 EXIT CH 36	649.1	0.857	35.13	1.109
TC EC06 EXIT CH 6	659.2	1.081	45.28	1.429
TC EC08 EXIT CH 8	617.3	0.439	3.33	0.105
TC EC27 EXIT CH 27	620.9	0.370	6.99	0.221
TC EA36 EXIT ANN EF	646.8	0.772	32.85	1.037
TC EA27 EXIT ANN BC	620.9	0.377	7.00	0.221
TC EA28 EXIT ANN C	624.9	0.690	10.97	0.346

RESULTS FOR THERMOCOUPLES INSIDE HEATERS
FFM SERIES 2 TEST 13 RUN 604 DONE ON 31372 1358

DESCRIPTION	TEMP DEG F	STD DEV	RISE AB INLET T	NORMALIZED TEMP
TC R0118AB HTR 1 INT	724.5	0.740	110.56	3.489
TC R0219AB HTR 2 INT	638.9	0.563	24.98	0.788
TC R0418AB HTR 4 INT	641.9	0.784	27.96	0.882
TC R0518AB HTR 5 INT	666.6	0.608	52.65	1.662
TC R1019AB HEATER 10	615.5	0.588	1.53	0.048
TC R1218AB HEATER 12	619.7	1.242	5.71	0.180
TC R1318DE HEATER 13	625.6	0.670	11.62	0.367
TC R1418AB HEATER 14	635.0	0.574	21.03	0.664
TC R1518AB HEATER 15	769.3	0.762	155.33	4.902
TC R1618AB HEATER 16	652.8	0.666	38.82	1.225
TC R1718AB HEATER 17	701.5	0.431	87.52	2.762
TC R1817AB HEATER 18	618.3	0.562	4.31	0.136
TC R0118BC HEATER 1	687.3	0.348	73.33	2.314
TC R0118CD HEATER 1	684.4	0.545	70.48	2.224
TC R0118DE HEATER 1	655.6	0.449	41.62	1.314
TC R0219BC HEATER 2	640.8	0.507	26.81	0.846
TC R0418BC HEATER 4	645.8	0.592	31.84	1.005
TC R0418CD HEATER 4	646.1	0.515	32.20	1.016
TC R0418DE HEATER 4	639.5	0.449	25.60	0.808
TC R0518BC HEATER 5	671.6	0.348	57.66	1.820
TC R0518CD HEATER 5	713.1	0.310	99.13	3.129
TC R0718BC HEATER 7	655.0	0.560	41.09	1.297
TC R0718CD HEATER 7	651.9	0.435	37.92	1.197
TC R0718DE HEATER 7	631.2	0.535	17.25	0.544
TC R0818BC HEATER 8	614.7	0.316	0.73	0.023
TC R1019BC HEATER 10	615.4	0.454	1.46	0.046
TC R1718BC HEATER 17	698.4	0.597	84.50	2.667
TC R1918DE HEATER 19	616.3	0.839	2.34	0.074

OPERATING DATA FOR FFM SERIES 2 TEST 13 RUN 704
WHICH WAS DONE ON 31372 1432

DESCRIPTION	MEAN VALUE	STANDARD DEVIATION
HEATER 1 POWER KW	-0.03	0.009
HEATER 8,18,19 POWER	0.0	0.0
HTR 12,13,14 POWER	-0.08	0.0
HTR 2,7,9,17 POWER	14.09	0.036
HTR 4,5,11,15 POWER	-0.06	0.022
HTR 3,6,10,16 POWER	-0.12	0.0
TOTAL POWER	13.41	0.0
TEST SECT FLOW, GPM	11.58	0.037
TEST SECT INLET PR	10.27	0.074
TEST SECT OUTLET PR	6.29	0.032
TOTAL FLOW, GPM	26.55	0.171
PUMP OUTLET PR, PSI	8.72	0.074
PUMP SPEED, RPM	364.14	0.358
BLOWER SPEED, RPM	-2.53	0.0
AIR FLOW (200 F) CFM	0.98	0.004
TC 313 TEST SECT IN	606.50	0.725
TC 317 TEST SECT OUT	638.45	0.604
TC 300 PUMP OUTLET	616.55	0.331
TC 318 RADIATOR IN	637.94	0.725
TC 334 RADIATOR OUT	603.79	0.683
TC 336 PUMP INLET	605.92	0.405
TC 332 RAD AIR IN	324.22	2.387
TC 331 RAD AIR OUT	290.21	0.605

HEAT BALANCE ON SODIUM FLOWING THROUGH BUNDLE
HEAT SUPPLIED BY DUMMY FUEL RODS = 48117.34 BTU/HR
HEAT ADDED TO SODIUM = 49873.96 BTU/HR
PERCENT HEAT BALANCE = 103.65

RESULTS FOR UNGROUNDED JUNCTION THERMOCOUPLES
FFM SERIES 2 TEST 13 RUN 704 DONE ON 31372 1432

DESCRIPTION	TEMP DEG F	STD DEV	RISE AB INLET T	NORMALIZED TEMP
TC 1504U CH 37	606.8	0.530	0.26	0.008
TC 1706U CH 21	628.5	0.673	22.00	0.714
TC 1807U CH 24	680.0	0.530	73.52	2.385
TC 1108U CH 31	606.2	0.646	-0.29	-0.009
TC 0409U CH 13	607.4	0.673	0.90	0.029
TC 0509U CH 3	613.4	0.699	6.89	0.224
TC 1009U CH 29	606.3	0.781	-0.24	-0.008
TC 1409U CH 17	606.7	0.725	0.18	0.006
TC 1609U CH 21	612.7	0.570	6.20	0.201
TC 1914U CH 24	619.5	0.487	13.00	0.422
TC 0815U CH 8	624.3	0.673	17.84	0.579
TC 1316U CH 35	608.6	0.689	2.06	0.067
TC 1516U CH 37	611.8	0.750	5.29	0.172
TC 0817U CH 9	618.1	0.838	11.56	0.375
TC 1217U CH 33	607.7	0.591	1.16	0.038
TC 1318U CH 34	608.8	0.591	2.28	0.074
TC 1718U CH 22	700.1	0.587	93.65	3.038
TC 1219U CH 32	608.1	0.692	1.62	0.053
TC 1819U CH 24	689.4	0.432	82.93	2.690
TC 1120U CH 31	609.7	1.296	3.20	0.104
TC 0421U CH 13	615.2	0.733	8.66	0.281
TC 0521U CH 3	627.9	0.601	21.40	0.694
TC 1021U CH 29	607.6	0.601	1.10	0.036
TC 1421U CH 17	613.0	0.629	6.48	0.210
TC 1621U CH 21	654.0	0.610	47.52	1.542

RESULTS FOR GROUNDED JUNCTION THERMOCOUPLES
FFM SERIES 2 TEST 13 RUN 704 DONE ON 31372 1432

DESCRIPTION	TEMP DEG F	STD DEV	RISE AB INLET T	NORMALIZED TEMP
TC 0118C CH 3	633.8	0.592	27.32	0.886
TC 0618D CH 4	655.9	0.496	49.38	1.602
TC 0618C CH 19	642.7	0.618	36.22	1.175
TC 0219A HEATER 2	642.8	0.412	36.30	1.178
TC 0219B CH 10	628.7	0.574	22.20	0.720
TC 0919A HTR 9 EXT	610.7	0.592	4.18	0.136
TC 0919B CH 29	609.1	0.533	2.57	0.083
TC 0718C CH 5	797.7	0.182	191.17	6.202
TC 0718D CH 6	780.2	0.260	173.73	5.636
TC 0319A HEATER 3	611.8	0.707	5.34	0.173
TC 0319B CH 12	610.0	0.601	3.52	0.114

RESULTS FOR DUCT WALL THERMOCOUPLES
FFM SERIES 2 TEST 13 RUN 704 DONE ON 31372 1432

DESCRIPTION	TEMP DEG F	STD DEV	RISE AB INLET T	NORMALIZED TEMP
TC D0B04 DUCT B	606.6	0.700	0.10	0.003
TC D0E04 DUCT E	606.4	0.837	-0.14	-0.005
TC D0F04 DUCT F	606.3	0.699	-0.19	-0.006
TC D0B08 DUCT B	606.9	0.627	0.37	0.012
TC D0D08 DUCT D	606.5	0.604	0.03	0.001
TC D0F08 DUCT F	606.6	0.578	0.15	0.005
TC D0B12 DUCT B	612.5	0.825	6.00	0.195
TC D0E12 DUCT E	606.2	0.898	-0.29	-0.009
TC D0F12 DUCT F	610.0	0.659	3.52	0.114
TC D0B16 DUCT B	622.7	0.432	16.16	0.524
TC D0D16 DUCT D	606.5	0.646	0.05	0.002
TC D0F16 DUCT F	612.5	0.626	6.05	0.196
TC D0D18 DUCT D	606.8	0.550	0.25	0.008
TC D0E18 DUCT E	608.8	0.516	2.32	0.075
TC DAB18 DUCT AB	629.7	0.461	23.20	0.753
TC DDE18 DUCT DE	607.8	0.659	1.26	0.041
TC DEF18 DUCT EF	610.2	0.627	3.67	0.119
TC D0F18 DUCT F	614.3	0.602	7.80	0.253
TC DFA18 DUCT FA	623.4	0.646	16.89	0.548
TC D0B21 DUCT B	614.9	0.601	8.40	0.273
TC D0D21 DUCT D	607.6	0.629	1.14	0.037
TC D0F21 DUCT F	623.1	0.763	16.63	0.539
TC D0B23 DUCT B	618.1	0.412	11.56	0.375
TC D0D23 DUCT D	608.5	0.540	1.96	0.064
TC D0F23 DUCT F	632.6	0.483	26.10	0.847

RESULTS FOR THERMOCOUPLES IN CHANNEL EXITS
FFM SERIES 2 TEST 13 RUN 704 DONE ON 31372 1432

DESCRIPTION	TEMP DEG F	STD DEV	RISE AB INLET T	NORMALIZED TEMP
TC EC03 EXIT CH 3	630.3	0.746	23.81	0.772
TC EC16 EXIT CH 16	617.1	0.763	10.59	0.344
TC EC17 EXIT CH 17	615.8	0.545	9.26	0.300
TC EC34 EXIT CH 34	616.0	0.592	9.48	0.308
TC EC35 EXIT CH 35	618.9	0.618	12.42	0.403
TC EC36 EXIT CH 36	625.9	0.472	19.36	0.628
TC EC06 EXIT CH 6	726.2	0.379	119.69	3.883
TC EC08 EXIT CH 8	629.1	0.371	22.57	0.732
TC EC27 EXIT CH 27	613.2	0.280	6.70	0.217
TC EA36 EXIT ANN EF	625.1	0.363	18.58	0.603
TC EA27 EXIT ANN BC	615.4	0.494	8.86	0.287
TC EA28 EXIT ANN C	613.3	0.381	6.75	0.219

RESULTS FOR THERMOCOUPLES INSIDE HEATERS
FFM SERIES 2 TEST 13 RUN 704 DONE ON 31372 1432

DESCRIPTION	TEMP DEG F	STD DEV	RISE AB INLET T	NORMALIZED TEMP
TC R0118AB HTR 1 INT	676.4	0.541	69.94	2.269
TC R0219AB HTR 2 INT	736.0	0.379	129.49	4.201
TC R0418AB HTR 4 INT	620.9	0.326	14.37	0.466
TC R0518AB HTR 5 INT	626.3	0.483	19.80	0.642
TC R1019AB HEATER 10	609.9	0.533	3.43	0.111
TC R1218AB HEATER 12	604.7	1.416	-1.78	-0.058
TC R1318DE HEATER 13	608.4	0.794	1.91	0.062
TC R1418AB HEATER 14	610.1	0.601	3.58	0.116
TC R1518AB HEATER 15	636.6	0.575	30.13	0.977
TC R1618AB HEATER 16	626.6	0.618	20.14	0.653
TC R1718AB HEATER 17	706.4	0.338	99.91	3.241
TC R1817AB HEATER 18	640.0	0.654	33.55	1.088
TC R0118BC HEATER 1	650.1	0.417	43.56	1.413
TC R0118CD HEATER 1	649.3	0.495	42.82	1.389
TC R0118DE HEATER 1	638.1	0.495	31.60	1.025
TC R0219BC HEATER 2	716.1	0.477	109.59	3.555
TC R0418BC HEATER 4	620.8	0.689	14.33	0.455
TC R0418CD HEATER 4	621.2	0.556	14.73	0.478
TC R0418DE HEATER 4	616.4	0.477	9.88	0.321
TC R0518BC HEATER 5	628.3	0.388	21.76	0.706
TC R0518CD HEATER 5	649.3	0.545	42.81	1.389
TC R0718BC HEATER 7	848.6	0.221	242.08	7.853
TC R0718CD HEATER 7	842.9	0.322	236.39	7.659
TC R0718DE HEATER 7	822.4	0.612	215.88	7.003
TC R0818BC HEATER 8	613.1	0.477	6.60	0.214
TC R1019BC HEATER 10	609.0	0.727	2.49	0.081
TC R1718BC HEATER 17	709.3	0.620	102.85	3.337
TC R1918DE HEATER 19	656.7	0.725	50.22	1.629

OPERATING DATA FOR FFM SERIES 2 TEST 13 RUN 804
WHICH WAS DONE ON 31372 1451

DESCRIPTION	MEAN VALUE	STANDARD DEVIATION
HEATER 1 POWER KW	-0.03	0.0
HEATER 8,18,19 POWER	14.25	0.018
HTR 12,13,14 POWER	-0.08	0.0
HTR 2,7,9,17 POWER	-0.03	0.018
HTR 4,5,11,15 POWER	-0.07	0.018
HTR 3,6,10,16 POWER	-0.11	0.018
TOTAL POWER	13.27	0.131
TEST SECT FLOW, GPM	11.53	0.044
TEST SECT INLET PR	10.27	0.151
TEST SECT OUTLET PR	6.27	0.058
TOTAL FLOW, GPM	26.59	0.430
PUMP OUTLET PR, PSI	8.67	0.017
PUMP SPEED, RPM	363.76	0.646
BLOWER SPEED, RPM	-2.53	0.0
AIR FLOW (200 F) CFM	0.99	0.008
TC 313 TEST SECT IN	603.35	2.411
TC 317 TEST SECT OUT	634.57	1.823
TC 300 PUMP OUTLET	609.58	0.166
TC 318 RADIATOR IN	634.22	5.348
TC 334 RADIATOR OUT	604.41	3.920
TC 336 PUMP INLET	603.94	2.647
TC 332 RAD AIR IN	334.19	5.606
TC 331 RAD AIR OUT	284.51	1.896

HEAT BALANCE ON SODIUM FLOWING THROUGH BUNDLE
HEAT SUPPLIED BY DUMMY FUEL RODS = 48663.75 BTU/HR
HEAT ADDED TO SODIUM = 48565.31 BTU/HR
PERCENT HEAT BALANCE = 99.80

RESULTS FOR UNGROUNDED JUNCTION THERMOCOUPLES
FFM SERIES 2 TEST 13 RUN 804 DONE ON 31372 1451

DESCRIPTION	TEMP DEG F	STD DEV	RISE AB INLET T	NORMALIZED TEMP
TC 1504U CH 37	603.1	2.313	-0.20	-0.006
TC 1706U CH 21	603.3	2.370	-0.05	-0.002
TC 1807U CH 24	607.3	2.111	3.90	0.125
TC 1108U CH 31	603.1	1.990	-0.27	-0.009
TC 0409U CH 13	603.7	2.194	0.38	0.012
TC 0509U CH 3	603.4	2.159	0.01	0.000
TC 1009U CH 29	604.1	1.967	0.72	0.023
TC 1409U CH 17	602.7	2.330	-0.63	-0.020
TC 1609U CH 21	603.9	2.245	0.54	0.017
TC 1914U CH 24	673.1	2.238	69.79	2.231
TC 0815U CH 8	759.6	2.332	156.30	4.996
TC 1316U CH 35	606.3	2.227	2.91	0.093
TC 1516U CH 37	615.2	2.091	11.87	0.379
TC 0817U CH 9	744.2	2.329	140.82	4.501
TC 1217U CH 33	604.6	1.990	1.29	0.041
TC 1318U CH 34	607.0	2.236	3.67	0.117
TC 1718U CH 22	617.5	2.414	14.16	0.453
TC 1219U CH 32	604.7	2.128	1.32	0.042
TC 1819U CH 24	671.9	2.186	68.54	2.191
TC 1120U CH 31	603.3	2.207	-0.01	-0.000
TC 0421U CH 13	605.7	2.408	2.32	0.074
TC 0521U CH 3	604.9	2.431	1.55	0.050
TC 1021U CH 29	605.8	2.342	2.46	0.079
TC 1421U CH 17	607.0	2.250	3.68	0.118
TC 1621U CH 21	621.3	2.287	17.97	0.574

RESULTS FOR GROUNDED JUNCTION THERMOCOUPLES
FFM SERIES 2 TEST 13 RUN 804 DONE ON 31372 1451

DESCRIPTION	TEMP DEG F	STD DEV	RISE AB INLET T	NORMALIZED TEMP
TC 0118C CH 3	605.3	2.278	1.93	0.062
TC 0618D CH 4	605.5	2.319	2.14	0.068
TC 0618C CH 19	606.0	2.293	2.67	0.085
TC 0219A HEATER 2	647.7	2.042	44.33	1.417
TC 0219B CH 10	648.4	2.186	45.07	1.441
TC 0919A HTR 9 EXT	615.8	2.287	12.48	0.399
TC 0919B CH 29	610.1	2.368	6.74	0.215
TC 0718C CH 5	624.9	2.445	21.52	0.688
TC 0718D CH 6	617.9	2.259	14.53	0.464
TC 0319A HEATER 3	606.3	2.325	2.92	0.093
TC 0319B CH 12	605.7	2.160	2.33	0.074

RESULTS FOR DUCT WALL THERMOCOUPLES
FFM SERIES 2 TEST 13 RUN 804 DONE ON 31372 1451

DESCRIPTION	TEMP DEG F	STD DEV	RISE AB INLET T	NORMALIZED TEMP
TC DOB04 DUCT B	623.5	1.942	20.15	0.644
TC DOE04 DUCT E	603.0	1.811	-0.35	-0.011
TC DOF04 DUCT F	602.9	1.818	-0.47	-0.015
TC DOB08 DUCT B	642.7	2.064	39.37	1.259
TC DOD08 DUCT D	603.5	1.837	0.13	0.004
TC DOF08 DUCT F	603.2	1.946	-0.19	-0.006
TC DOB12 DUCT B	671.4	2.094	68.02	2.174
TC DOE12 DUCT E	603.2	1.887	-0.16	-0.005
TC DOF12 DUCT F	613.5	1.950	10.17	0.325
TC DOB16 DUCT B	702.2	1.904	98.86	3.160
TC DOD16 DUCT D	604.8	1.951	1.43	0.046
TC DOF16 DUCT F	617.0	1.894	13.61	0.435
TC DOD18 DUCT D	605.3	1.953	1.99	0.064
TC DOE18 DUCT E	607.2	2.057	3.82	0.122
TC DAB18 DUCT AB	667.0	1.780	63.67	2.035
TC DDE18 DUCT DE	605.8	1.742	2.42	0.077
TC DEF18 DUCT EF	611.1	1.797	7.73	0.247
TC DOF18 DUCT F	617.2	1.950	13.89	0.444
TC DFA18 DUCT FA	626.0	1.949	22.66	0.724
TC DOB21 DUCT B	678.3	2.140	75.00	2.397
TC DOD21 DUCT D	606.0	1.720	2.67	0.085
TC DOF21 DUCT F	621.5	1.885	18.20	0.582
TC DOB23 DUCT B	678.4	2.238	75.03	2.398
TC DOD23 DUCT D	605.6	1.972	2.25	0.072
TC DOF23 DUCT F	634.5	2.087	31.15	0.996

RESULTS FOR THERMOCOUPLES IN CHANNEL EXITS
FFM SERIES 2 TEST 13 RUN 804 DONE ON 31372 1451

DESCRIPTION	TEMP DEG F	STD DEV	RISE AB INLET T	NORMALIZED TEMP
TC EC03 EXIT CH 3	606.5	2.271	3.16	0.101
TC EC16 EXIT CH 16	606.3	2.050	2.96	0.095
TC EC17 EXIT CH 17	609.3	2.053	5.94	0.190
TC EC34 EXIT CH 34	617.6	1.935	14.26	0.456
TC EC35 EXIT CH 35	619.9	2.076	16.59	0.530
TC EC36 EXIT CH 36	631.1	2.983	27.78	0.888
TC EC06 EXIT CH 6	635.2	2.076	31.88	1.019
TC EC08 EXIT CH 8	700.8	1.935	97.41	3.114
TC EC27 EXIT CH 27	638.5	2.388	35.18	1.125
TC EA36 EXIT ANN EF	629.8	2.530	26.42	0.845
TC EA27 EXIT ANN BC	640.3	2.712	36.98	1.182
TC EA28 EXIT ANN C	620.8	1.478	17.48	0.559

RESULTS FOR THERMOCOUPLES INSIDE HEATERS
FFM SERIES 2 TEST 13 RUN 804 DONE ON 31372 1451

DESCRIPTION	TEMP DEG F	STD DEV	RISE AB INLET T	NORMALIZED TEMP
TC R0118AB HTR 1 INT	607.4	2.135	4.06	0.130
TC R0219AB HTR 2 INT	655.0	2.563	51.62	1.650
TC R0418AB HTR 4 INT	605.3	2.271	1.96	0.063
TC R0518AB HTR 5 INT	603.8	2.439	0.48	0.015
TC R1019AB HEATER 10	610.9	2.161	7.58	0.242
TC R1218AB HEATER 12	603.0	1.941	-0.38	-0.012
TC R1318DE HEATER 13	605.8	2.206	2.44	0.078
TC R1418AB HEATER 14	609.2	2.174	5.82	0.186
TC R1518AB HEATER 15	606.8	2.416	3.49	0.112
TC R1618AB HEATER 16	623.6	2.271	20.28	0.648
TC R1718AB HEATER 17	617.9	2.271	14.52	0.464
TC R1817AB HEATER 18	655.6	2.264	52.24	1.670
TC R0118BC HEATER 1	607.2	2.180	3.83	0.122
TC R0118CD HEATER 1	607.3	2.076	3.95	0.126
TC R0118DE HEATER 1	608.9	2.395	5.54	0.177
TC R0219BC HEATER 2	643.9	2.232	40.51	1.295
TC R0418BC HEATER 4	605.2	2.199	1.87	0.060
TC R0418CD HEATER 4	605.2	2.373	1.82	0.058
TC R0418DE HEATER 4	604.2	2.062	0.85	0.027
TC R0518BC HEATER 5	604.7	2.256	1.37	0.044
TC R0518CD HEATER 5	605.5	2.224	2.17	0.069
TC R0718BC HEATER 7	637.9	2.259	34.56	1.105
TC R0718CD HEATER 7	640.8	1.983	37.42	1.196
TC R0718DE HEATER 7	662.3	2.201	58.91	1.883
TC R0818BC HEATER 8	871.0	2.291	267.68	8.557
TC R1019BC HEATER 10	607.7	2.062	4.35	0.139
TC R1718BC HEATER 17	618.9	2.143	15.53	0.496
TC R1918DE HEATER 19	704.1	1.944	100.79	3.222

OPERATING DATA FOR FFM SERIES 2 TEST 13 RUN 904
WHICH WAS DONE ON 31372 1511

DESCRIPTION	MEAN VALUE	STANDARD DEVIATION
HEATER 1 POWER KW	-0.03	0.0
HEATER 8,18,19 POWER	0.0	0.0
HTR 12,13,14 POWER	-0.07	0.018
HTR 2,7,9,17 POWER	13.76	0.022
HTR 4,5,11,15 POWER	-0.06	0.022
HTR 3,6,10,16 POWER	-0.12	0.0
TOTAL POWER	13.12	0.107
TEST SECT FLOW, GPM	11.54	0.036
TEST SECT INLET PR	10.27	0.139
TEST SECT OUTLET PR	6.25	0.055
TOTAL FLOW, GPM	26.36	0.175
PUMP OUTLET PR, PSI	8.63	0.027
PUMP SPEED, RPM	363.68	1.184
BLOWER SPEED, RPM	-2.50	0.076
AIR FLOW (200 F) CFM	0.98	0.004
TC 313 TEST SECT IN	613.51	0.822
TC 317 TEST SECT OUT	644.61	0.876
TC 300 PUMP OUTLET	619.78	0.202
TC 318 RADIATOR IN	644.05	0.545
TC 334 RADIATOR OUT	608.40	0.758
TC 336 PUMP INLET	611.50	0.743
TC 332 RAD AIR IN	328.33	1.485
TC 331 RAD AIR OUT	295.91	1.401

HEAT BALANCE ON SODIUM FLOWING THROUGH BUNDLE
HEAT SUPPLIED BY DUMMY FUEL RODS = 46990.39 BTU/HR
HEAT ADDED TO SODIUM = 48288.56 BTU/HR
PERCENT HEAT BALANCE = 102.76

RESULTS FOR UNGROUNDED JUNCTION THERMOCOUPLES
FFM SERIES 2 TEST 13 RUN 904 DONE ON 31372 1511

DESCRIPTION	TEMP DEG F	STD DEV	RISE AB INLET T	NORMALIZED TEMP
TC 1504U CH 37	613.4	0.876	-0.10	-0.003
TC 1706U CH 21	613.5	0.723	0.02	0.001
TC 1807U CH 24	613.8	0.772	0.31	0.010
TC 1108U CH 31	615.3	0.855	1.82	0.060
TC 0409U CH 13	615.8	0.820	2.24	0.074
TC 0509U CH 3	614.0	1.093	0.50	0.017
TC 1009U CH 29	621.5	0.852	8.03	0.265
TC 1409U CH 17	613.7	0.822	0.18	0.006
TC 1609U CH 21	614.0	0.999	0.52	0.017
TC 1914U CH 24	643.3	0.885	29.80	0.985
TC 0815U CH 8	677.0	0.889	63.46	2.097
TC 1316U CH 35	614.6	0.822	1.12	0.037
TC 1516U CH 37	617.6	0.918	4.07	0.134
TC 0817U CH 9	717.5	0.876	104.00	3.436
TC 1217U CH 33	614.3	0.733	0.76	0.025
TC 1318U CH 34	614.6	0.836	1.09	0.036
TC 1718U CH 22	619.6	0.870	6.07	0.201
TC 1219U CH 32	614.4	0.944	0.87	0.029
TC 1819U CH 24	641.3	1.025	27.81	0.919
TC 1120U CH 31	616.6	0.943	3.05	0.101
TC 0421U CH 13	627.6	0.820	14.05	0.464
TC 0521U CH 3	616.8	0.955	3.33	0.110
TC 1021U CH 29	629.0	0.793	15.45	0.511
TC 1421U CH 17	614.5	0.938	1.03	0.034
TC 1621U CH 21	621.9	1.090	8.41	0.278

RESULTS FOR GROUNDED JUNCTION THERMOCOUPLES
FFM SERIES 2 TEST 13 RUN 904 DONE ON 31372 1511

DESCRIPTION	TEMP DEG F	STD DEV	RISE AB INLET T	NORMALIZED TEMP
TC 0118C CH 3	621.9	0.991	8.44	0.279
TC 0618D CH 4	614.4	0.759	0.90	0.030
TC 0618C CH 19	614.5	1.016	1.00	0.033
TC 0219A HEATER 2	727.1	0.830	113.62	3.754
TC 0219B CH 10	756.5	0.913	143.04	4.726
TC 0919A HTR 9 EX7	766.8	0.975	153.29	5.065
TC 0919B CH 29	728.3	1.362	114.81	3.794
TC 0718C CH 5	628.2	0.855	14.70	0.486
TC 0718D CH 6	624.1	1.066	10.58	0.350
TC 0319A HEATER 3	649.3	0.833	35.75	1.181
TC 0319B CH 12	649.4	0.932	35.93	1.187

RESULTS FOR DUCT WALL THERMOCOUPLES
FFM SERIES 2 TEST 13 RUN 904 DONE ON 31372 1511

DESCRIPTION	TEMP DEG F	STD DEV	RISE AB INLET T	NORMALIZED TEMP
TC DOB04 DUCT B	615.4	0.963	1.88	0.062
TC DOE04 DUCT E	613.5	0.723	0.0	0.0
TC DOF04 DUCT F	613.4	0.580	-0.10	-0.003
TC DOB08 DUCT B	640.2	0.671	26.71	0.883
TC DOD08 DUCT D	614.9	0.723	1.38	0.046
TC DOF08 DUCT F	614.0	0.885	0.47	0.016
TC DOB12 DUCT B	647.9	0.906	34.40	1.137
TC DOE12 DUCT E	614.5	0.885	0.95	0.031
TC DOF12 DUCT F	616.6	0.802	3.12	0.103
TC DOB16 DUCT B	655.0	0.984	41.51	1.372
TC DOD16 DUCT D	617.5	0.723	3.98	0.132
TC DOF16 DUCT F	619.1	0.855	5.58	0.184
TC DOD18 DUCT D	618.4	0.762	4.91	0.162
TC DOE18 DUCT E	615.9	0.876	2.42	0.080
TC DAB18 DUCT AB	643.4	0.605	29.93	0.989
TC DDE18 DUCT DE	617.4	0.829	3.93	0.130
TC DEF18 DUCT EF	617.1	0.921	3.62	0.120
TC DOF18 DUCT F	619.0	0.568	5.51	0.182
TC DFA18 DUCT FA	623.9	0.763	10.37	0.343
TC DOB21 DUCT B	679.3	0.932	65.79	2.174
TC DOD21 DUCT D	620.4	0.929	6.86	0.227
TC DOF21 DUCT F	621.2	0.806	7.69	0.254
TC DOB23 DUCT B	676.7	0.803	63.15	2.087
TC DOD23 DUCT D	621.6	1.010	8.09	0.267
TC DOF23 DUCT F	628.5	0.876	14.95	0.494

RESULTS FOR THERMOCOUPLES IN CHANNEL EXITS
FFM SERIES 2 TEST 13 RUN 904 DONE ON 31372 1511

DESCRIPTION	TEMP DEG F	STD DEV	RISE AB INLET T	NORMALIZED TEMP
TC EC03 EXIT CH 3	616.3	0.839	2.75	0.091
TC EC16 EXIT CH 16	615.7	0.839	2.17	0.072
TC EC17 EXIT CH 17	617.3	1.016	3.76	0.124
TC EC34 EXIT CH 34	620.0	0.838	6.48	0.214
TC EC35 EXIT CH 35	621.8	0.929	8.24	0.272
TC EC36 EXIT CH 36	628.1	0.896	14.64	0.484
TC EC06 EXIT CH 6	636.3	0.759	22.84	0.755
TC EC08 EXIT CH 8	673.8	0.590	60.32	1.993
TC EC27 EXIT CH 27	659.7	1.312	46.20	1.527
TC EA36 EXIT ANN EF	626.1	0.838	12.62	0.417
TC EA27 EXIT ANN BC	654.3	2.040	40.77	1.347
TC EA28 EXIT ANN C	632.1	1.042	18.55	0.613

RESULTS FOR THERMOCOUPLES INSIDE HEATERS
FFM SERIES 2 TEST 13 RUN 904 DONE ON 31372 1511

DESCRIPTION	TEMP DEG F	STD DEV	RISE AB INLET T	NORMALIZED TEMP
TC R0118AB HTR 1 INT	618.9	1.010	5.42	0.179
TC R0219AB HTR 2 INT	656.5	1.025	43.03	1.422
TC R0418AB HTR 4 INT	624.1	0.911	10.62	0.351
TC R0518AB HTR 5 INT	615.8	0.906	2.31	0.076
TC R1019AB HEATER 10	703.5	0.991	90.04	2.975
TC R1218AB HEATER 12	612.0	1.399	-1.49	-0.049
TC R1318DE HEATER 13	613.9	0.906	0.37	0.012
TC R1418AB HEATER 14	615.1	0.906	1.55	0.051
TC R1518AB HEATER 15	614.8	0.932	1.33	0.044
TC R1618AB HEATER 16	622.6	1.068	9.05	0.299
TC R1718AB HEATER 17	619.3	0.991	5.84	0.193
TC R1817AB HEATER 18	635.5	1.025	22.01	0.727
TC R0118BC HEATER 1	621.1	1.164	7.60	0.251
TC R0118CD HEATER 1	621.6	0.828	8.14	0.269
TC R0118DE HEATER 1	631.9	0.932	18.44	0.609
TC R0219BC HEATER 2	656.5	1.026	43.00	1.421
TC R0418BC HEATER 4	620.0	1.164	6.52	0.215
TC R0418CD HEATER 4	620.1	0.981	6.58	0.217
TC R0418DE HEATER 4	616.0	0.885	2.50	0.083
TC R0518BC HEATER 5	615.8	0.885	2.26	0.075
TC R0518CD HEATER 5	615.7	0.885	2.18	0.072
TC R0718BC HEATER 7	637.5	1.059	24.00	0.793
TC R0718CD HEATER 7	639.2	0.849	25.66	0.848
TC R0718DE HEATER 7	653.7	0.797	40.22	1.329
TC R0818BC HEATER 8	730.4	1.020	116.88	3.862
TC R1019BC HEATER 10	671.5	0.913	58.01	1.917
TC R1718BC HEATER 17	619.5	0.902	6.02	0.199
TC R1918DE HEATER 19	674.5	1.363	60.98	2.015

OPERATING DATA FOR FFM SERIES 2 TEST 13 RUN 1004
WHICH WAS DONE ON 31472 904

DESCRIPTION	MEAN VALUE	STANDARD DEVIATION
HEATER 1 POWER KW	-0.03	0.0
HEATER 8,18,19 POWER	0.0	0.0
HTR 12,13,14 POWER	-0.08	0.0
HTR 2,7,9,17 POWER	-0.04	0.0
HTR 4,5,11,15 POWER	-0.08	0.0
HTR 3,6,10,16 POWER	14.38	0.022
TOTAL POWER	13.41	0.0
TEST SECT FLOW, GPM	11.47	0.078
TEST SECT INLET PR	10.26	0.069
TEST SECT OUTLET PR	6.35	0.030
TOTAL FLOW, GPM	27.25	0.256
PUMP OUTLET PR, PSI	8.90	0.049
PUMP SPEED, RPM	350.00	0.794
BLOWER SPEED, RPM	47.94	0.500
AIR FLOW (200 F) CFM	0.99	0.011
TC 313 TEST SECT IN	614.47	1.035
TC 317 TEST SECT OUT	646.80	1.367
TC 300 PUMP OUTLET	615.15	0.768
TC 318 RADIATOR IN	646.59	1.348
TC 334 RADIATOR OUT	615.00	1.430
TC 336 PUMP INLET	614.18	0.659
TC 332 RAD AIR IN	315.07	1.337
TC 331 RAD AIR OUT	350.38	2.670

HEAT BALANCE ON SODIUM FLOWING THROUGH BUNDLE
HEAT SUPPLIED BY DUMMY FUEL RODS = 49107.70 BTU/HR
HEAT ADDED TO SODIUM = 49832.60 BTU/HR
PERCENT HEAT BALANCE = 101.58

RESULTS FOR UNGROUNDED JUNCTION THERMOCOUPLES
FFM SERIES 2 TEST 13 RUN 1004 DONE ON 31472 904

DESCRIPTION	TEMP DEG F	STD DEV	RISE AB INLET T	NORMALIZED TEMP
TC 1504U CH 37	614.6	1.166	0.10	0.003
TC 1706U CH 21	614.2	1.056	-0.24	-0.008
TC 1807U CH 24	614.4	1.041	-0.02	-0.001
TC 1108U CH 31	624.8	1.071	10.32	0.324
TC 0409U CH 13	624.0	1.010	9.49	0.298
TC 0509U CH 3	614.6	1.041	0.14	0.004
TC 1009U CH 29	719.0	1.063	104.49	3.283
TC 1409U CH 17	614.5	1.071	0.08	0.003
TC 1609U CH 21	614.4	1.181	-0.06	-0.002
TC 1914U CH 24	635.9	1.194	21.43	0.673
TC 0815U CH 8	636.3	0.913	21.87	0.687
TC 1316U CH 35	615.6	1.071	1.10	0.035
TC 1516U CH 37	616.5	1.166	2.00	0.063
TC 0817U CH 9	658.4	1.190	43.96	1.381
TC 1217U CH 33	615.4	1.109	0.98	0.031
TC 1318U CH 34	614.9	0.915	0.41	0.013
TC 1718U CH 22	617.8	1.041	3.32	0.104
TC 1219U CH 32	617.1	0.981	2.68	0.084
TC 1819U CH 24	629.9	0.959	15.45	0.485
TC 1120U CH 31	634.4	1.189	19.93	0.626
TC 0421U CH 13	640.5	0.710	26.03	0.818
TC 0521U CH 3	618.2	0.849	3.77	0.118
TC 1021U CH 29	744.8	1.203	130.35	4.095
TC 1421U CH 17	615.7	0.862	1.23	0.039
TC 1621U CH 21	619.8	0.866	5.32	0.167

RESULTS FOR GROUNDED JUNCTION THERMOCOUPLES
FFM SERIES 2 TEST 13 RUN 1004 DONE ON 31472 904

DESCRIPTION	TEMP DEG F	STD DEV	RISE AB INLET T	NORMALIZED TEMP
TC 0118C CH 3	624.4	0.695	9.91	0.311
TC 0618D CH 4	615.8	0.695	1.29	0.041
TC 0618C CH 19	615.5	0.594	1.05	0.033
TC 0219A HEATER 2	669.3	0.970	54.86	1.724
TC 0219B CH 10	679.9	0.953	65.46	2.057
TC 0919A HTR 9 EXT	750.8	1.333	136.29	4.282
TC 0919B CH 29	733.4	0.766	118.94	3.737
TC 0718C CH 5	618.5	0.842	4.06	0.128
TC 0718D CH 6	617.3	0.809	2.87	0.090
TC 0319A HEATER 3	727.2	0.795	112.71	3.541
TC 0319B CH 12	744.8	1.091	130.31	4.094

RESULTS FOR DUCT WALL THERMOCOUPLES
FFM SERIES 2 TEST 13 RUN 1004 DONE ON 31472 904

DESCRIPTION	TEMP DEG F	STD DEV	RISE AB INLET T	NORMALIZED TEMP
TC DOB04 DUCT B	615.1	1.070	0.67	0.021
TC DOE04 DUCT E	614.6	1.109	0.15	0.005
TC DOF04 DUCT F	614.3	1.109	-0.14	-0.004
TC DOB08 DUCT B	635.6	1.367	21.13	0.664
TC DOD08 DUCT D	623.4	1.345	8.95	0.281
TC DOF08 DUCT F	614.7	1.093	0.27	0.008
TC DOB12 DUCT B	639.3	1.092	24.79	0.779
TC DOE12 DUCT E	616.2	1.336	1.72	0.054
TC DOF12 DUCT F	616.5	1.367	2.03	0.064
TC DOB16 DUCT B	639.8	1.215	25.32	0.796
TC DOD16 DUCT D	627.5	1.231	13.08	0.411
TC DOF16 DUCT F	617.9	1.261	3.42	0.107
TC DOD18 DUCT D	630.4	1.009	15.94	0.501
TC DOE18 DUCT E	617.8	1.152	3.35	0.105
TC DAB18 DUCT AB	635.6	1.370	21.11	0.663
TC DDE18 DUCT DE	623.4	1.250	8.89	0.279
TC DEF18 DUCT EF	617.4	1.398	2.95	0.093
TC DOF18 DUCT F	617.9	1.070	3.45	0.108
TC DFA18 DUCT FA	621.3	1.367	6.79	0.213
TC DOB21 DUCT B	683.6	1.102	69.14	2.172
TC DOD21 DUCT D	640.9	1.377	26.40	0.829
TC DOF21 DUCT F	620.2	1.133	5.69	0.179
TC DOB23 DUCT B	680.0	1.102	65.54	2.059
TC DOD23 DUCT D	643.5	0.981	29.04	0.912
TC DOF23 DUCT F	625.8	1.043	11.35	0.357

RESULTS FOR THERMOCOUPLES IN CHANNEL EXITS
FFM SERIES 2 TEST 13 RUN 1004 DONE ON 31472 904

DESCRIPTION	TEMP DEG F	STD DEV	RISE AB INLET T	NORMALIZED TEMP
TC EC03 EXIT CH 3	620.4	1.042	5.89	0.185
TC EC16 EXIT CH 16	618.0	0.971	3.54	0.111
TC EC17 EXIT CH 17	617.5	1.103	3.06	0.096
TC EC34 EXIT CH 34	620.8	1.065	6.35	0.200
TC EC35 EXIT CH 35	622.4	0.646	7.94	0.249
TC EC36 EXIT CH 36	631.6	1.397	17.12	0.538
TC EC06 EXIT CH 6	627.4	0.683	12.92	0.406
TC EC08 EXIT CH 8	663.7	1.173	54.25	1.704
TC EC27 EXIT CH 27	669.6	1.190	55.17	1.733
TC EA36 EXIT ANN EF	631.4	0.684	16.92	0.532
TC EA27 EXIT ANN BC	668.1	1.228	53.61	1.684
TC EA28 EXIT ANN C	647.8	1.799	33.34	1.048

RESULTS FOR THERMOCOUPLES INSIDE HEATERS
FFM SERIES 2 TEST 13 RUN 1004 DONE ON 31472 904

DESCRIPTION	TEMP DEG F	STD DEV	RISE AB INLET T	NORMALIZED TEMP
TC R0118AB HTR 1 INT	617.9	0.908	3.40	0.107
TC R0219AB HTR 2 INT	629.6	0.862	15.17	0.477
TC R0418AB HTR 4 INT	631.2	0.862	16.75	0.526
TC R0518AB HTR 5 INT	618.9	0.862	4.45	0.140
TC R1019AB HEATER 10	987.6	88.614	373.18	11.725
TC R1218AB HEATER 12	618.7	1.117	4.26	0.134
TC R1318DE HEATER 13	615.6	0.869	1.18	0.037
TC R1418AB HEATER 14	615.9	1.139	1.43	0.045
TC R1518AB HEATER 15	615.4	0.750	0.90	0.028
TC R1618AB HEATER 16	619.9	0.862	5.45	0.171
TC R1718AB HEATER 17	617.8	0.808	3.32	0.104
TC R1817AB HEATER 18	630.1	0.930	15.62	0.491
TC R0118BC HEATER 1	622.8	0.815	8.30	0.261
TC R0118CD HEATER 1	623.5	0.733	9.05	0.284
TC R0118DE HEATER 1	632.0	0.819	17.50	0.550
TC R0219BC HEATER 2	630.8	0.733	16.37	0.514
TC R0418BC HEATER 4	625.5	0.684	11.00	0.346
TC R0418CD HEATER 4	625.4	0.776	10.98	0.345
TC R0418DE HEATER 4	621.3	0.898	6.87	0.216
TC R0518BC HEATER 5	619.0	0.760	4.49	0.141
TC R0518CD HEATER 5	618.0	0.688	3.54	0.111
TC R0718BC HEATER 7	621.1	0.871	6.65	0.209
TC R0718CD HEATER 7	621.9	0.634	7.42	0.233
TC R0718DE HEATER 7	625.8	0.650	11.30	0.355
TC R0818BC HEATER 8	691.9	0.824	77.42	2.432
TC R1019BC HEATER 10	827.6	36.142	213.15	6.697
TC R1718BC HEATER 17	618.5	0.760	4.03	0.127
TC R1918DE HEATER 19	637.6	0.594	23.17	0.728

OPERATING DATA FOR FFM SERIES 2 TEST 13 RUN 1104
WHICH WAS DONE ON 31472 935

DESCRIPTION	MEAN VALUE	STANDARD DEVIATION
HEATER 1 POWER KW	-0.03	0.0
HEATER 8,18,19 POWER	0.0	0.0
HTR 12,13,14 POWER	-0.08	0.0
HTR 2,7,9,17 POWER	-0.03	0.018
HTR 4,5,11,15 POWER	14.53	0.013
HTR 3,6,10,16 POWER	-0.10	0.022
TOTAL POWER	13.41	0.0
TEST SECT FLOW, GPM	11.38	0.018
TEST SECT INLET PR	10.28	0.049
TEST SECT OUTLET PR	6.33	0.025
TOTAL FLOW, GPM	27.06	0.163
PUMP OUTLET PR, PSI	8.86	0.042
PUMP SPEED, RPM	349.10	0.938
BLOWER SPEED, RPM	57.41	28.345
AIR FLOW (200 F) CFM	0.98	0.004
TC 313 TEST SECT IN	608.71	5.635
TC 317 TEST SECT OUT	640.17	5.188
TC 300 PUMP OUTLET	612.04	4.997
TC 318 RADIATOR IN	639.79	5.107
TC 334 RADIATOR OUT	621.97	7.306
TC 336 PUMP INLET	612.94	5.338
TC 332 RAD AIR IN	314.90	20.364
TC 331 RAD AIR OUT	321.56	26.207

HEAT BALANCE ON SODIUM FLOWING THROUGH BUNDLE
HEAT SUPPLIED BY DUMMY FUEL RODS = 49619.95 BTU/HR
HEAT ADDED TO SODIUM = 48226.35 BTU/HR
PERCENT HEAT BALANCE = 97.19

RESULTS FOR UNGROUNDED JUNCTION THERMOCOUPLES
FFM SERIES 2 TEST 13 RUN 1104 DONE ON 31472 935

DESCRIPTION	TEMP DEG F	STD DEV	RISE AB INLET T	NORMALIZED TEMP
TC 1504U CH 37	608.4	5.802	-0.29	-0.009
TC 1706U CH 21	608.6	5.689	-0.06	-0.002
TC 1807U CH 24	608.6	5.929	-0.14	-0.004
TC 1108U CH 31	714.7	5.633	106.00	3.275
TC 0409U CH 13	700.9	5.676	92.24	2.850
TC 0509U CH 3	610.5	5.608	1.78	0.055
TC 1009U CH 29	651.0	5.668	42.26	1.306
TC 1409U CH 17	608.6	5.558	-0.10	-0.003
TC 1609U CH 21	608.5	5.793	-0.23	-0.007
TC 1914U CH 24	613.6	5.515	4.86	0.150
TC 0815U CH 8	615.9	5.722	7.18	0.222
TC 1316U CH 35	614.1	5.428	5.36	0.166
TC 1516U CH 37	608.6	5.598	-0.13	-0.004
TC 0817U CH 9	625.4	5.444	16.70	0.516
TC 1217U CH 33	618.9	5.543	10.19	0.315
TC 1318U CH 34	609.9	5.674	1.20	0.037
TC 1718U CH 22	609.6	5.584	0.91	0.028
TC 1219U CH 32	620.5	5.649	11.75	0.363
TC 1819U CH 24	612.9	5.619	4.21	0.130
TC 1120U CH 31	742.0	5.548	133.25	4.117
TC 0421U CH 13	664.9	5.838	56.22	1.737
TC 0521U CH 3	620.7	5.671	12.00	0.371
TC 1021U CH 29	687.8	5.609	79.12	2.444
TC 1421U CH 17	610.8	5.619	2.13	0.066
TC 1621U CH 21	609.5	5.619	0.83	0.026

RESULTS FOR GROUNDED JUNCTION THERMOCOUPLES
FFM SERIES 2 TEST 13 RUN 1104 DONE ON 31472 935

DESCRIPTION	TEMP DEG F	STD DEV	RISE AB INLET T	NORMALIZED TEMP
TC 0118C CH 3	636.3	5.669	27.59	0.852
TC 0618D CH 4	611.9	5.515	3.18	0.098
TC 0618C CH 19	610.3	5.771	1.56	0.048
TC 0219A HEATER 2	636.0	5.686	27.26	0.842
TC 0219B CH 10	640.9	5.686	32.24	0.996
TC 0919A HTR 9 EXT	673.4	5.586	64.69	1.999
TC 0919B CH 29	676.6	5.609	67.90	2.098
TC 0718C CH 5	611.6	5.552	2.93	0.091
TC 0718D CH 6	610.5	5.947	1.75	0.054
TC 0319A HEATER 3	722.6	5.812	113.86	3.518
TC 0319B CH 12	732.3	5.558	123.54	3.817

RESULTS FOR DUCT WALL THERMOCOUPLES
FFM SERIES 2 TEST 13 RUN 1104 DONE ON 31472 935

DESCRIPTION	TEMP DEG F	STD DEV	RISE AB INLET T	NORMALIZED TEMP
TC D0B04 DUCT B	608.1	5.511	-0.62	-0.019
TC D0E04 DUCT E	608.6	5.471	-0.08	-0.002
TC D0F04 DUCT F	608.0	5.373	-0.72	-0.022
TC D0B08 DUCT B	611.3	5.208	2.57	0.079
TC D0D08 DUCT D	645.9	5.300	37.24	1.150
TC D0F08 DUCT F	608.0	5.235	-0.74	-0.023
TC D0B12 DUCT B	614.1	5.447	5.37	0.166
TC D0E12 DUCT E	611.7	5.342	2.96	0.091
TC D0F12 DUCT F	608.7	5.428	-0.02	-0.001
TC D0B16 DUCT B	615.7	5.238	6.95	0.215
TC D0D16 DUCT D	637.7	5.134	28.98	0.895
TC D0F16 DUCT F	608.7	5.176	-0.04	-0.001
TC D0D18 DUCT D	651.6	5.566	42.90	1.325
TC D0E18 DUCT E	613.1	5.297	4.38	0.135
TC DAB18 DUCT AB	613.6	5.133	4.87	0.150
TC DDE18 DUCT DE	622.3	5.135	13.56	0.419
TC DEF18 DUCT EF	610.2	5.377	1.46	0.045
TC D0F18 DUCT F	608.9	5.318	0.16	0.005
TC DFA18 DUCT FA	608.9	5.235	0.24	0.007
TC D0B21 DUCT B	644.3	5.178	35.62	1.100
TC D0D21 DUCT D	680.1	5.195	71.40	2.206
TC D0F21 DUCT F	609.3	5.483	0.58	0.018
TC D0B23 DUCT B	643.9	5.297	35.18	1.087
TC D0D23 DUCT D	686.8	5.386	78.06	2.412
TC D0F23 DUCT F	611.3	5.203	2.62	0.081

RESULTS FOR THERMOCOUPLES IN CHANNEL EXITS
FFM SERIES 2 TEST 13 RUN 1104 DONE ON 31472 935

DESCRIPTION	TEMP DEG F	STD DEV	RISE AB INLET T	NORMALIZED TEMP
TC EC03 EXIT CH 3	622.6	5.753	13.87	0.428
TC EC16 EXIT CH 16	613.1	5.339	9.41	0.291
TC EC17 EXIT CH 17	612.6	5.515	3.86	0.119
TC EC34 EXIT CH 34	613.4	5.287	4.68	0.145
TC EC35 EXIT CH 35	612.6	5.395	3.85	0.119
TC EC36 EXIT CH 36	615.6	5.550	6.94	0.214
TC EC06 EXIT CH 6	618.5	5.775	9.84	0.304
TC EC08 EXIT CH 8	642.4	5.075	33.73	1.042
TC EC27 EXIT CH 27	655.8	5.392	47.05	1.454
TC EA36 EXIT ANN EF	616.3	5.423	7.58	0.234
TC EA27 EXIT ANN BC	655.7	5.397	46.95	1.450
TC EA28 EXIT ANN C	652.2	5.417	43.50	1.344

RESULTS FOR THERMOCOUPLES INSIDE HEATERS
FFM SERIES 2 TEST 13 RUN 1104 DONE ON 31472 935

DESCRIPTION	TEMP DEG F	STD DEV	RISE AB INLET T	NORMALIZED TEMP
TC R0118AB HTR 1 INT	619.0	5.622	10.25	0.317
TC R0219AB HTR 2 INT	616.4	5.464	7.68	0.237
TC R0418AB HTR 4 INT	653.4	5.574	44.72	1.382
TC R0518AB HTR 5 INT	629.9	5.730	21.22	0.656
TC R1019AB HEATER 10	679.6	5.730	70.94	2.192
TC R1218AB HEATER 12	621.7	5.540	12.97	0.401
TC R1318DE HEATER 13	614.4	5.484	5.70	0.176
TC R1418AB HEATER 14	609.4	5.336	0.67	0.021
TC R1518AB HEATER 15	609.5	5.512	0.78	0.024
TC R1618AB HEATER 16	609.3	5.410	0.59	0.018
TC R1718AB HEATER 17	609.3	5.566	0.64	0.020
TC R1817AB HEATER 18	612.3	5.401	3.55	0.110
TC R0118BC HEATER 1	629.3	5.497	20.63	0.637
TC R0118CD HEATER 1	630.1	5.725	21.37	0.660
TC R0118DE HEATER 1	639.1	5.707	30.43	0.940
TC R0219BC HEATER 2	617.4	5.658	8.65	0.267
TC R0418BC HEATER 4	646.7	5.759	37.95	1.172
TC R0418CD HEATER 4	644.4	5.794	35.72	1.104
TC R0418DE HEATER 4	638.3	5.564	29.61	0.915
TC R0518BC HEATER 5	629.9	5.737	21.18	0.654
TC R0518CD HEATER 5	621.2	5.671	12.46	0.385
TC R0718BC HEATER 7	612.9	5.231	4.23	0.131
TC R0718CD HEATER 7	613.0	5.522	4.32	0.133
TC R0718DE HEATER 7	613.5	5.632	4.79	0.148
TC R0818BC HEATER 8	638.6	5.346	29.88	0.923
TC R1019BC HEATER 10	699.2	5.484	90.45	2.794
TC R1718BC HEATER 17	609.5	5.721	0.81	0.025
TC R1918DE HEATER 19	617.4	5.615	8.67	0.268

OPERATING DATA FOR FFM SERIES 2 TEST 13 RUN 1204
WHICH WAS DONE ON 31472 1010

DESCRIPTION	MEAN VALUE	STANDARD DEVIATION
HEATER 1 POWER KW	-0.03	0.0
HEATER 8,18,19 POWER	0.0	0.0
HTR 12,13,14 POWER	14.18	0.022
HTR 2,7,9,17 POWER	-0.07	0.018
HTR 4,5,11,15 POWER	-0.08	0.0
HTR 3,6,10,16 POWER	-0.11	0.018
TOTAL POWER	12.98	0.107
TEST SECT FLOW, GPM	11.37	0.022
TEST SECT INLET PR	10.22	0.064
TEST SECT OUTLET PR	6.31	0.047
TOTAL FLOW, GPM	26.91	0.135
PUMP OUTLET PR, PSI	8.84	0.046
PUMP SPEED, RPM	349.34	0.669
BLOWER SPEED, RPM	48.00	0.811
AIR FLOW (200 F) CFM	0.98	0.007
TC 313 TEST SECT IN	601.09	0.511
TC 317 TEST SECT OUT	632.47	0.463
TC 300 PUMP OUTLET	602.57	0.061
TC 318 RADIATOR IN	632.09	0.436
TC 334 RADIATOR OUT	605.20	5.502
TC 336 PUMP INLET	602.02	0.265
TC 332 RAD AIR IN	315.21	2.290
TC 331 RAD AIR OUT	344.84	4.869

HEAT BALANCE ON SODIUM FLOWING THROUGH BUNDLE
HEAT SUPPLIED BY DUMMY FUEL RODS = 48424.70 BTU/HR
HEAT ADDED TO SODIUM = 48164.13 BTU/HR
PERCENT HEAT BALANCE = 99.46

RESULTS FOR UNGROUNDED JUNCTION THERMOCOUPLES
FFM SERIES 2 TEST 13 RUN 1204 DONE ON 31472 1010

DESCRIPTION	TEMP DEG F	STD DEV	RISE AB INLET T	NORMALIZED TEMP
TC 1504U CH 37	601.0	0.740	-0.10	-0.003
TC 1706U CH 21	600.9	0.742	-0.21	-0.007
TC 1807U CH 24	601.2	0.614	0.11	0.003
TC 1108U CH 31	656.4	0.616	55.29	1.752
TC 0409U CH 13	645.1	0.742	44.01	1.395
TC 0509U CH 3	604.0	0.779	2.87	0.091
TC 1009U CH 29	630.6	0.622	29.48	0.934
TC 1409U CH 17	602.9	0.712	1.82	0.058
TC 1609U CH 21	601.1	0.640	0.0	0.0
TC 1914U CH 24	603.1	0.640	2.06	0.065
TC 0815U CH 8	604.6	0.393	3.56	0.113
TC 1316U CH 35	627.3	0.592	26.19	0.830
TC 1516U CH 37	601.2	0.742	0.11	0.003
TC 0817U CH 9	608.1	0.711	7.06	0.224
TC 1217U CH 33	683.8	0.973	82.66	2.620
TC 1318U CH 34	607.3	0.617	6.16	0.195
TC 1718U CH 22	601.8	0.439	0.72	0.023
TC 1219U CH 32	726.5	0.783	125.39	3.974
TC 1819U CH 24	603.5	0.571	2.44	0.077
TC 1120U CH 31	689.1	0.628	88.01	2.790
TC 0421U CH 13	652.3	0.504	51.16	1.622
TC 0521U CH 3	612.7	0.403	11.61	0.368
TC 1021U CH 29	674.9	0.628	73.85	2.341
TC 1421U CH 17	608.8	0.524	7.73	0.245
TC 1621U CH 21	601.9	0.718	0.85	0.027

RESULTS FOR GROUNDED JUNCTION THERMOCOUPLES
FFM SERIES 2 TEST 13 RUN 1204 DONE ON 31472 1010

DESCRIPTION	TEMP DEG F	STD DEV	RISE AB INLET T	NORMALIZED TEMP
TC 0118C CH 3	622.2	0.597	21.07	0.668
TC 0618D CH 4	605.1	0.408	4.03	0.128
TC 0618C CH 19	603.5	0.676	2.40	0.076
TC 0219A HEATER 2	611.8	0.489	10.73	0.340
TC 0219B CH 10	613.4	0.597	12.35	0.391
TC 0919A HTR 9 EXT	648.5	0.567	47.44	1.504
TC 0919B CH 29	660.8	0.524	59.69	1.892
TC 0718C CH 5	603.4	0.579	2.35	0.074
TC 0718D CH 6	602.2	1.565	1.12	0.036
TC 0319A HEATER 3	642.5	0.668	41.38	1.312
TC 0319B CH 12	644.9	0.511	43.83	1.389

RESULTS FOR DUCT WALL THERMOCOUPLES
FFM SERIES 2 TEST 13 RUN 1204 DONE ON 31472 1010

DESCRIPTION	TEMP DEG F	STD DEV	RISE AB INLET T	NORMALIZED TEMP
TC DOB04 DUCT B	601.3	0.476	0.22	0.007
TC DOE04 DUCT E	604.6	0.436	3.50	0.111
TC DOF04 DUCT F	601.3	0.567	0.19	0.006
TC DOB08 DUCT B	602.3	0.439	1.22	0.039
TC DOD08 DUCT D	649.1	0.547	47.99	1.521
TC DOF08 DUCT F	602.0	0.439	0.96	0.030
TC DOB12 DUCT B	604.3	0.472	3.17	0.100
TC DOE12 DUCT E	617.9	0.511	16.86	0.534
TC DOF12 DUCT F	602.4	0.616	1.29	0.041
TC DOB16 DUCT B	605.1	0.348	3.98	0.126
TC DOD16 DUCT D	669.6	0.463	68.54	2.172
TC DOF16 DUCT F	602.7	0.203	1.60	0.051
TC DOD18 DUCT D	673.2	0.551	72.10	2.285
TC DOE18 DUCT E	622.7	0.439	21.64	0.686
TC DAB18 DUCT AB	604.2	0.348	3.08	0.098
TC DDE18 DUCT DE	653.8	0.574	52.69	1.670
TC DEF18 DUCT EF	608.5	0.498	7.46	0.236
TC DOF18 DUCT F	603.0	0.473	1.90	0.060
TC DFA18 DUCT FA	602.1	0.472	1.03	0.033
TC DOB21 DUCT B	624.9	0.307	23.83	0.755
TC DOD21 DUCT D	684.2	0.628	83.15	2.636
TC DOF21 DUCT F	603.2	0.759	2.09	0.066
TC DOB23 DUCT B	626.1	0.511	25.01	0.793
TC DOD23 DUCT D	693.1	0.584	92.05	2.918
TC DOF23 DUCT F	604.3	0.307	3.25	0.103

RESULTS FOR THERMOCOUPLES IN CHANNEL EXITS
FFM SERIES 2 TEST 13 RUN 1204 DONE ON 31472 1010

DESCRIPTION	TEMP DEG F	STD DEV	RISE AB INLET T	NORMALIZED TEMP
TC EC03 EXIT CH 3	614.2	0.577	13.11	0.416
TC EC16 EXIT CH 16	619.0	0.570	17.95	0.569
TC EC17 EXIT CH 17	610.9	0.740	9.83	0.312
TC EC34 EXIT CH 34	617.2	0.610	16.15	0.512
TC EC35 EXIT CH 35	607.1	0.530	6.00	0.190
TC EC36 EXIT CH 36	605.6	0.640	4.55	0.144
TC EC06 EXIT CH 6	607.1	0.511	6.03	0.191
TC EC08 EXIT CH 8	626.3	0.766	25.18	0.798
TC EC27 EXIT CH 27	638.1	1.416	37.01	1.173
TC EA36 EXIT ANN EF	606.2	0.581	5.14	0.163
TC EA27 EXIT ANN BC	637.1	1.669	35.98	1.140
TC EA28 EXIT ANN C	646.0	1.061	44.91	1.423

RESULTS FOR THERMOCOUPLES INSIDE HEATERS
FFM SERIES 2 TEST 13 RUN 1204 DONE ON 31472 1010

DESCRIPTION	TEMP DEG F	STD DEV	RISE AB INLET T	NORMALIZED TEMP
TC R0118AB HTR 1 INT	609.1	0.818	7.99	0.253
TC R0219AB HTR 2 INT	604.8	0.616	3.70	0.117
TC R0418AB HTR 4 INT	634.5	0.567	33.44	1.060
TC R0518AB HTR 5 INT	623.6	0.567	22.48	0.713
TC R1019AB HEATER 10	636.4	0.566	35.30	1.119
TC R1218AB HEATER 12	808.6	0.737	207.52	6.578
TC R1318DE HEATER 13	626.5	0.725	25.44	0.806
TC R1418AB HEATER 14	605.0	0.567	3.96	0.126
TC R1518AB HEATER 15	602.7	0.632	1.63	0.052
TC R1618AB HEATER 16	602.0	0.577	0.95	0.030
TC R1718AB HEATER 17	601.7	0.690	0.64	0.020
TC R1817AB HEATER 18	603.3	0.448	2.18	0.069
TC R0118BC HEATER 1	616.0	0.741	14.88	0.472
TC R0118CD HEATER 1	616.7	0.628	15.57	0.494
TC R0118DE HEATER 1	620.2	0.624	19.14	0.607
TC R0219BC HEATER 2	604.8	0.869	3.74	0.119
TC R0418BC HEATER 4	633.0	0.676	31.89	1.011
TC R0418CD HEATER 4	632.0	0.574	30.88	0.979
TC R0418DE HEATER 4	638.8	0.704	37.68	1.194
TC R0518BC HEATER 5	622.2	0.629	21.12	0.669
TC R0518CD HEATER 5	611.8	0.574	10.66	0.338
TC R0718BC HEATER 7	603.0	0.760	1.87	0.059
TC R0718CD HEATER 7	603.2	0.475	2.10	0.067
TC R0718DE HEATER 7	603.5	0.614	2.45	0.078
TC R0818BC HEATER 8	615.7	0.741	14.64	0.464
TC R1019BC HEATER 10	638.7	0.656	37.60	1.192
TC R1718BC HEATER 17	602.2	0.692	1.08	0.034
TC R1918DE HEATER 19	604.1	0.384	3.03	0.096

OPERATING DATA FOR FFM SERIES 2 TEST 13 RUN 1304
WHICH WAS DONE ON 31472 1033

DESCRIPTION	MEAN VALUE	STANDARD DEVIATION
HEATER 1 POWER KW	-0.03	0.0
HEATER 8,18,19 POWER	0.0	0.0
HTR 12,13,14 POWER	14.54	0.022
HTR 2,7,9,17 POWER	-0.04	0.0
HTR 4,5,11,15 POWER	-0.08	0.0
HTR 3,6,10,16 POWER	-0.12	0.0
TOTAL POWER	13.41	0.0
TEST SECT FLOW, GPM	11.38	0.044
TEST SECT INLET PR	10.23	0.072
TEST SECT OUTLET PR	6.30	0.040
TOTAL FLOW, GPM	26.96	0.152
PUMP OUTLET PR, PSI	8.85	0.054
PUMP SPEED, RPM	349.36	1.542
BLOWER SPEED, RPM	64.22	18.315
AIR FLOW (200 F) CFM	0.98	0.005
TC 313 TEST SECT IN	604.53	1.693
TC 317 TEST SECT OUT	637.50	1.260
TC 300 PUMP OUTLET	603.72	1.904
TC 318 RADIATOR IN	637.55	1.315
TC 334 RADIATOR OUT	603.99	3.282
TC 336 PUMP INLET	603.31	2.258
TC 332 RAD AIR IN	308.02	5.160
TC 331 RAD AIR OUT	369.73	12.303

HEAT BALANCE ON SODIUM FLOWING THROUGH BUNDLE
HEAT SUPPLIED BY DUMMY FUEL RODS = 49654.10 BTU/HR
HEAT ADDED TO SODIUM = 50604.11 BTU/HR
PERCENT HEAT BALANCE = 101.91

RESJLTS FOR UNGROUNDED JUNCTION THERMOCCUPLES
FFM SERIES 2 TEST 13 RUN 1304 DONE ON 31472 1033

DESCRIPTION	TEMP DEG F	STD DEV	RISE AB INLET T	NORMALIZED TEMP
TC 1504U CH 37	604.9	1.543	0.39	0.012
TC 1706U CH 21	604.4	1.348	-0.08	-0.002
TC 1807U CH 24	604.7	1.416	0.14	0.004
TC 1108U CH 31	621.9	1.543	17.41	0.538
TC 0409U CH 13	632.6	1.393	28.08	0.868
TC 0509U CH 3	639.8	1.496	35.26	1.090
TC 1009U CH 29	614.6	1.493	10.08	0.312
TC 1409U CH 17	672.6	1.598	68.12	2.106
TC 1609U CH 21	604.6	1.413	0.10	0.003
TC 1914U CH 24	604.8	1.416	0.32	0.010
TC 0815U CH 8	605.1	1.521	0.57	0.018
TC 1316U CH 35	741.2	1.415	136.67	4.225
TC 1516U CH 37	606.3	1.367	1.78	0.055
TC 0817U CH 9	606.9	1.405	2.34	0.072
TC 1217U CH 33	700.0	1.466	95.52	2.953
TC 1318U CH 34	676.9	1.607	72.38	2.237
TC 1718U CH 22	605.8	1.548	1.22	0.038
TC 1219U CH 32	691.0	1.530	86.48	2.673
TC 1819U CH 24	605.5	1.530	0.94	0.029
TC 1120U CH 31	661.4	1.329	56.88	1.758
TC 0421U CH 13	652.9	1.605	48.38	1.495
TC 0521U CH 3	636.2	1.605	31.64	0.978
TC 1021U CH 29	651.1	1.453	46.58	1.440
TC 1421U CH 17	675.2	1.793	70.68	2.185
TC 1621U CH 21	606.0	1.530	1.46	0.045

RESULTS FOR GROUNDED JUNCTION THERMOCOUPLES
FFM SERIES 2 TEST 13 RUN 1304 DONE ON 31472 1033

DESCRIPTION	TEMP DEG F	STD DEV	RISE AB INLET T	NORMALIZED TEMP
TC 0118C CH 3	641.3	1.659	36.77	1.137
TC 0618D CH 4	621.3	1.745	16.74	0.517
TC 0618C CH 19	616.7	1.784	12.18	0.376
TC 0219A HEATER 2	610.9	1.584	6.37	0.197
TC 0219B CH 10	611.5	1.624	6.98	0.216
TC 0919A HTR 9 EXT	626.8	1.659	22.27	0.688
TC 0919B CH 29	633.4	1.650	28.89	0.893
TC 0718C CH 5	608.9	1.784	4.38	0.135
TC 0718D CH 6	609.7	2.373	5.20	0.161
TC 0319A HEATER 3	628.4	1.626	23.86	0.738
TC 0319B CH 12	627.9	1.517	23.34	0.721

RESULTS FOR DUCT WALL THERMOCOUPLES
FFM SERIES 2 TEST 13 RUN 1304 DONE ON 31472 1033

DESCRIPTION	TEMP DEG F	STD DEV	RISE AB INLET T	NORMALIZED TEMP
TC DOB04 DUCT B	605.2	1.594	0.64	0.020
TC DOE04 DUCT E	625.6	1.347	21.11	0.653
TC DOF04 DUCT F	605.5	1.340	1.00	0.031
TC DOB08 DUCT B	605.3	1.372	0.76	0.023
TC DOD08 DUCT D	624.0	1.319	19.43	0.601
TC DOF08 DUCT F	607.2	1.367	2.68	0.083
TC DOB12 DUCT B	605.4	1.172	0.92	0.028
TC DOE12 DUCT E	638.9	1.442	34.37	1.062
TC DOF12 DUCT F	607.1	1.372	2.58	0.080
TC DOB16 DUCT B	605.8	1.347	1.25	0.039
TC DOD16 DUCT D	658.0	1.341	53.44	1.652
TC DOF16 DUCT F	608.6	1.172	4.06	0.125
TC DOD18 DUCT D	657.1	1.309	52.61	1.626
TC DOE18 DUCT E	668.6	1.400	64.07	1.980
TC DAB18 DUCT AB	606.2	1.454	1.64	0.051
TC DDE18 DUCT DE	666.8	1.396	62.28	1.925
TC DEF18 DUCT EF	627.8	1.410	23.24	0.718
TC DOF18 DUCT F	609.8	1.498	5.29	0.164
TC DFA18 DUCT FA	607.2	1.454	2.68	0.083
TC DOB21 DUCT B	615.0	1.454	10.49	0.324
TC DOD21 DUCT D	661.6	1.422	57.12	1.766
TC DOF21 DUCT F	609.8	1.475	5.26	0.163
TC DOB23 DUCT B	616.3	1.491	11.74	0.363
TC DOD23 DUCT D	667.5	1.567	62.96	1.946
TC DOF23 DUCT F	608.4	1.389	3.86	0.119

RESULTS FOR THERMOCOUPLES IN CHANNEL EXITS
FFM SERIES 2 TEST 13 RUN 1304 DONE ON 31472 1033

DESCRIPTION	TEMP DEG F	STD DEV	RISE AB INLET T	NORMALIZED TEMP
TC EC03 EXIT CH 3	633.0	1.565	28.49	0.881
TC EC16 EXIT CH 16	641.3	1.485	36.82	1.138
TC EC17 EXIT CH 17	638.8	1.927	34.28	1.060
TC EC34 EXIT CH 34	694.0	1.815	89.52	2.767
TC EC35 EXIT CH 35	632.3	2.606	27.73	0.857
TC EC36 EXIT CH 36	616.5	2.109	11.98	0.370
TC EC06 EXIT CH 6	609.9	1.517	5.34	0.165
TC EC08 EXIT CH 8	616.1	1.638	11.59	0.358
TC EC27 EXIT CH 27	619.5	1.578	15.02	0.464
TC EA36 EXIT ANN EF	623.4	2.477	18.88	0.584
TC EA27 EXIT ANN BC	616.7	0.861	12.14	0.375
TC EA28 EXIT ANN C	620.9	1.097	16.42	0.508

RESULTS FOR THERMOCOUPLES INSIDE HEATERS
FFM SERIES 2 TEST 13 RUN 1304 DONE ON 31472 1033

DESCRIPTION	TEMP DEG F	STD DEV	RISE AB INLET T	NORMALIZED TEMP
TC R0118AB HTR 1 INT	626.9	1.713	22.33	0.690
TC R0219AB HTR 2 INT	607.8	1.843	3.24	0.100
TC R0418AB HTR 4 INT	646.0	1.542	41.50	1.283
TC R0518AB HTR 5 INT	660.0	1.779	55.49	1.715
TC R1019AB HEATER 10	621.1	1.631	16.58	0.513
TC R1218AB HEATER 12	688.0	1.640	83.47	2.580
TC R1318DE HEATER 13	875.1	1.807	270.58	8.364
TC R1418AB HEATER 14	624.7	1.366	20.19	0.624
TC R1518AB HEATER 15	612.5	1.430	8.02	0.248
TC R1618AB HEATER 16	605.3	1.409	0.76	0.023
TC R1718AB HEATER 17	605.8	1.665	1.28	0.040
TC R1817AB HEATER 18	605.2	1.565	0.69	0.021
TC R0118BC HEATER 1	634.8	1.605	30.27	0.936
TC R0118CD HEATER 1	635.1	1.632	30.56	0.945
TC R0118DE HEATER 1	631.3	1.229	26.74	0.827
TC R0219BC HEATER 2	609.1	1.564	4.57	0.141
TC R0418BC HEATER 4	653.0	1.362	48.49	1.499
TC R0418CD HEATER 4	654.2	1.604	49.71	1.537
TC R0418DE HEATER 4	691.4	1.631	86.83	2.686
TC R0518BC HEATER 5	657.0	1.504	52.47	1.622
TC R0518CD HEATER 5	635.3	1.493	30.81	0.952
TC R0718BC HEATER 7	608.5	1.793	3.96	0.122
TC R0718CD HEATER 7	607.8	1.548	3.28	0.101
TC R0718DE HEATER 7	606.6	1.594	2.03	0.063
TC R0818BC HEATER 8	610.0	1.783	5.43	0.168
TC R1019BC HEATER 10	623.5	1.529	18.95	0.586
TC R1718BC HEATER 17	606.4	1.564	1.89	0.058
TC R1918DE HEATER 19	604.7	1.484	0.13	0.004

OPERATING DATA FOR FFM SERIES 2 TEST 13 RUN 1404
WHICH WAS DONE ON 31472 1110

DESCRIPTION	MEAN VALUE	STANDARD DEVIATION
HEATER 1 POWER KW	-0.03	0.0
HEATER 8,18,19 POWER	0.0	0.0
HTR 12,13,14 POWER	14.32	0.0
HTR 2,7,9,17 POWER	-0.02	0.022
HTR 4,5,11,15 POWER	-0.08	0.0
HTR 3,6,10,16 POWER	-0.10	0.022
TOTAL POWER	13.17	0.0
TEST SECT FLOW, GPM	11.34	0.035
TEST SECT INLET PR	10.22	0.049
TEST SECT OUTLET PR	6.33	0.032
TOTAL FLOW, GPM	26.47	0.202
PUMP OUTLET PR, PSI	8.77	0.059
PUMP SPEED, RPM	347.72	1.320
BLOWER SPEED, RPM	[illegible]	9.434
AIR FLOW (200 F) CFM	0.99	0.011
TC 313 TEST SECT IN	586.58	0.263
TC 317 TEST SECT OUT	618.93	0.407
TC 300 PUMP OUTLET	586.45	0.296
TC 318 RADIATOR IN	618.93	0.539
TC 334 RADIATOR OUT	586.83	0.202
TC 336 PUMP INLET	586.01	0.401
TC 332 RAD AIR IN	305.41	1.278
TC 331 RAD AIR OUT	336.32	16.884

HEAT BALANCE ON SODIUM FLOWING THROUGH BUNDLE
HEAT SUPPLIED BY DUMMY FUEL RODS = 48902.80 BTU/HR
HEAT ADDED TO SODIUM = 49715.30 BTU/HR
PERCENT HEAT BALANCE = 101.66

RESULTS FOR UNGROUNDED JUNCTION THERMOCOUPLES
FFM SERIES 2 TEST 13 RUN 1404 DONE ON 31472 1110

DESCRIPTION	TEMP DEG F	STD DEV	RISE AB INLET T	NORMALIZED TEMP
TC 1504U CH 37	591.4	0.473	4.80	0.151
TC 1706U CH 21	586.8	0.590	0.25	0.008
TC 1807U CH 24	586.7	0.284	0.11	0.003
TC 1108U CH 31	590.7	0.367	4.12	0.129
TC 0409U CH 13	589.7	0.384	3.09	0.097
TC 0509U CH 3	607.8	0.530	21.20	0.666
TC 1009U CH 29	588.0	0.174	1.47	0.046
TC 1409U CH 17	730.3	0.320	143.71	4.516
TC 1609U CH 21	587.1	0.499	0.49	0.015
TC 1914U CH 24	586.5	0.408	-0.07	-0.002
TC 0815U CH 8	587.2	0.466	0.58	0.018
TC 1316U CH 35	677.9	0.407	91.29	2.869
TC 1516U CH 37	602.8	0.263	16.22	0.510
TC 0817U CH 9	587.2	0.263	0.62	0.019
TC 1217U CH 33	661.3	0.407	74.71	2.348
TC 1318U CH 34	685.4	0.522	98.82	3.105
TC 1718U CH 22	588.7	0.366	2.10	0.066
TC 1219U CH 32	658.1	0.401	71.48	2.246
TC 1819U CH 24	586.8	0.448	0.26	0.008
TC 1120U CH 31	633.4	0.376	46.80	1.471
TC 0421U CH 13	608.0	0.460	21.46	0.674
TC 0521U CH 3	622.0	0.615	35.42	1.113
TC 1021U CH 29	622.3	0.460	35.72	1.123
TC 1421U CH 17	769.2	0.421	182.62	5.739
TC 1621U CH 21	589.0	0.460	2.44	0.077

RESULTS FOR GROUNDED JUNCTION THERMOCOUPLES
FFM SERIES 2 TEST 13 RUN 1404 DONE ON 31472 1110

DESCRIPTION	TEMP DEG F	STD DEV	RISE AB INLET T	NORMALIZED TEMP
TC 0118C CH 3	607.6	0.244	21.05	0.662
TC 0618D CH 4	610.9	0.366	24.35	0.765
TC 0618C CH 19	611.5	0.460	24.94	0.784
TC 0219A HEATER 2	588.7	0.268	2.11	0.066
TC 0219B CH 10	588.5	0.465	1.91	0.060
TC 0919A HTR 9 EXT	597.0	0.453	10.41	0.327
TC 0919B CH 29	602.3	0.459	15.71	0.494
TC 0718C CH 5	589.5	0.717	2.90	0.091
TC 0718D CH 6	589.0	0.835	2.41	0.076
TC 0319A HEATER 3	594.7	0.549	8.13	0.255
TC 0319B CH 12	594.6	0.453	7.99	0.251

RESULTS FOR DUCT WALL THERMOCOUPLES
FFM SERIES 2 TEST 13 RUN 1404 DONE ON 31472 1110

DESCRIPTION	TEMP DEG F	STD DEV	RISE AB INLET T	NORMALIZED TEMP
TC DOB04 DUCT B	586.5	0.379	-0.05	-0.002
TC DOE04 DUCT E	613.1	0.263	26.54	0.834
TC DOF04 DUCT F	592.4	0.433	5.86	0.184
TC DOB08 DUCT B	587.4	0.527	0.79	0.025
TC DOD08 DUCT D	593.3	0.263	6.70	0.211
TC DOF08 DUCT F	602.8	0.307	16.18	0.508
TC DOB12 DUCT B	587.2	0.285	0.61	0.019
TC DOE12 DUCT E	657.8	0.285	71.27	2.240
TC DOF12 DUCT F	594.5	0.530	7.92	0.249
TC DOB16 DUCT B	587.1	0.292	0.49	0.015
TC DOD16 DUCT D	635.9	0.185	49.29	1.549
TC DOF16 DUCT F	605.1	0.379	18.50	0.581
TC DOD18 DUCT D	634.8	0.340	48.25	1.516
TC DOE18 DUCT E	669.9	0.352	83.32	2.618
TC DAB18 DUCT AB	587.9	0.407	1.29	0.041
TC DDE18 DUCT DE	645.8	0.379	59.26	1.862
TC DEF18 DUCT EF	666.1	0.307	79.56	2.500
TC DOF18 DUCT F	612.4	0.599	25.80	0.811
TC DFA18 DUCT FA	594.2	0.263	7.66	0.241
TC DOB21 DUCT B	591.3	0.438	4.70	0.148
TC DOD21 DUCT D	634.2	0.403	47.59	1.496
TC DOF21 DUCT F	606.4	0.460	19.82	0.623
TC DOB23 DUCT B	592.5	0.448	5.96	0.187
TC DOD23 DUCT D	632.8	0.244	46.19	1.452
TC DOF23 DUCT F	596.3	0.237	9.69	0.305

RESULTS FOR THERMOCOUPLES IN CHANNEL EXITS
FFM SERIES 2 TEST 13 RUN 1404 DONE ON 31472 1110

DESCRIPTION	TEMP DEG F	STD DEV	RISE AB INLET T	NORMALIZED TEMP
TC EC03 EXIT CH 3	618.6	0.714	32.03	1.007
TC EC16 EXIT CH 16	640.9	0.829	54.32	1.707
TC EC17 EXIT CH 17	667.5	0.491	80.88	2.542
TC EC34 EXIT CH 34	676.8	0.733	90.17	2.834
TC EC35 EXIT CH 35	636.7	0.193	50.09	1.574
TC EC36 EXIT CH 36	618.0	1.406	31.38	0.986
TC EC06 EXIT CH 6	589.9	0.367	3.33	0.105
TC EC08 EXIT CH 8	594.7	0.550	8.08	0.254
TC EC27 EXIT CH 27	605.1	0.439	18.48	0.581
TC EA36 EXIT ANN EF	617.0	1.679	30.39	0.955
TC EA27 EXIT ANN BC	608.3	1.205	21.69	0.682
TC EA28 EXIT ANN C	615.9	0.863	29.35	0.922

RESULTS FOR THERMOCOUPLES INSIDE HEATERS
FFM SERIES 2 TEST 13 RUN 1404 DONE ON 31472 1110

DESCRIPTION	TEMP DEG F	STD DEV	RISE AB INLET T	NORMALIZED TEMP
TC R0118AB HTR 1 INT	604.2	0.174	17.59	0.553
TC R0219AB HTR 2 INT	588.1	0.388	1.54	0.048
TC R0418AB HTR 4 INT	606.3	0.448	19.70	0.619
TC R0518AB HTR 5 INT	624.7	0.624	38.08	1.197
TC R1019AB HEATER 10	593.8	0.316	7.26	0.228
TC R1218AB HEATER 12	653.3	0.448	66.69	2.096
TC R1318DE HEATER 13	678.7	0.415	92.16	2.896
TC R1418AB HEATER 14	862.3	0.543	275.70	8.664
TC R1518AB HEATER 15	614.6	0.244	28.05	0.881
TC R1618AB HEATER 16	588.8	0.316	2.22	0.070
TC R1718AB HEATER 17	588.4	0.559	1.86	0.058
TC R1817AB HEATER 18	587.3	0.582	0.75	0.024
TC R0118BC HEATER 1	605.6	0.242	19.01	0.597
TC R0118CD HEATER 1	605.4	0.372	18.83	0.592
TC R0118DE HEATER 1	600.7	0.463	14.12	0.444
TC R0219BC HEATER 2	588.8	0.342	2.25	0.071
TC R0418BC HEATER 4	611.7	0.479	25.13	0.790
TC R0418CD HEATER 4	612.5	0.265	25.92	0.815
TC R0418DE HEATER 4	627.6	0.265	40.98	1.288
TC R0518BC HEATER 5	622.5	0.253	35.97	1.130
TC R0518CD HEATER 5	613.5	0.192	26.91	0.846
TC R0718BC HEATER 7	588.7	0.466	2.09	0.066
TC R0718CD HEATER 7	588.4	0.386	1.83	0.058
TC R0718DE HEATER 7	587.9	0.342	1.37	0.043
TC R0818BC HEATER 8	587.9	0.561	1.35	0.042
TC R1019BC HEATER 10	594.2	0.350	7.61	0.239
TC R1718BC HEATER 17	588.3	0.233	1.70	0.053
TC R1918DE HEATER 19	585.9	0.381	-0.72	-0.023

OPERATING DATA FOR FFM SERIES 2 TEST 13 RUN 1504
WHICH WAS DONE ON 31472 1157

DESCRIPTION	MEAN VALUE	STANDARD DEVIATION
HEATER 1 POWER KW	-0.03	0.0
HEATER 8,18,19 POWER	0.0	0.0
HTR 12,13,14 POWER	-0.08	0.0
HTR 2,7,9,17 POWER	-0.03	0.021
HTR 4,5,11,15 POWER	14.36	0.016
HTR 3,6,10,16 POWER	-0.12	0.0
TOTAL POWER	13.17	0.0
TEST SECT FLOW, GPM	11.36	0.071
TEST SECT INLET PR	10.33	0.080
TEST SECT OUTLET PR	6.36	0.041
TOTAL FLOW, GPM	26.49	0.352
PUMP OUTLET PR, PSI	8.74	0.067
PUMP SPEED, RPM	350.07	1.328
BLOWER SPEED, RPM	57.25	18.617
AIR FLOW (200 F) CFM	0.97	0.015
TC 313 TEST SECT IN	611.15	3.815
TC 317 TEST SECT OUT	643.15	3.451
TC 300 PUMP OUTLET	613.80	2.396
TC 318 RADIATOR IN	642.26	3.716
TC 334 RADIATOR OUT	621.76	1.849
TC 336 PUMP INLET	614.51	2.375
TC 332 RAD AIR IN	334.17	5.491
TC 331 RAD AIR OUT	328.58	19.122

HEAT BALANCE ON SODIUM FLOWING THROUGH BUNDLE
HEAT SUPPLIED BY DUMMY FUEL RODS = 49039.40 BTU/HR
HEAT ADDED TO SODIUM = 48943.04 BTU/HR
PERCENT HEAT BALANCE = 99.80

RESULTS FOR UNGROUNDED JUNCTION THERMOCOUPLES
FFM SERIES 2 TEST 13 RUN 1504 DONE ON 31472 1157

DESCRIPTION	TEMP DEG F	STD DEV	RISE AB INLET T	NORMALIZED TEMP
TC 1504U CH 37	684.4	3.788	73.24	2.284
TC 1706U CH 21	612.7	3.797	1.51	0.047
TC 1807U CH 24	611.3	3.657	0.13	0.004
TC 1108U CH 31	611.3	3.622	0.14	0.004
TC 0409U CH 13	611.6	3.759	0.46	0.014
TC 0509U CH 3	624.0	3.918	12.89	0.402
TC 1009U CH 29	610.9	3.943	-0.23	-0.007
TC 1409U CH 17	639.4	3.834	28.26	0.881
TC 1609U CH 21	633.7	3.871	22.57	0.704
TC 1914U CH 24	610.7	3.925	-0.48	-0.015
TC 0815U CH 8	611.3	3.819	0.12	0.004
TC 1316U CH 35	659.4	3.680	48.22	1.504
TC 1516U CH 37	727.4	3.938	116.24	3.625
TC 0817U CH 9	611.3	3.727	0.17	0.005
TC 1217U CH 33	652.7	3.731	41.52	1.295
TC 1318U CH 34	662.3	3.949	51.11	1.594
TC 1718U CH 22	623.2	3.938	12.01	0.375
TC 1219U CH 32	650.8	3.867	39.70	1.238
TC 1819U CH 24	611.1	3.924	-0.07	-0.002
TC 1120U CH 31	634.7	3.986	23.53	0.734
TC 0421U CH 13	622.0	3.838	10.81	0.337
TC 0521U CH 3	651.3	3.640	40.17	1.253
TC 1021U CH 29	624.9	3.696	13.73	0.428
TC 1421U CH 17	697.2	3.840	86.03	2.683
TC 1621U CH 21	634.0	3.776	22.86	0.713

RESULTS FOR GROUNDED JUNCTION THERMOCOUPLES
FFM SERIES 2 TEST 13 RUN 1504 DONE ON 31472 1157

DESCRIPTION	TEMP DEG F	STD DEV	RISE AB INLET T	NORMALIZED TEMP
TC 0118C CH 3	630.9	3.782	19.78	0.617
TC 0618D CH 4	690.6	3.640	79.41	2.477
TC 0618C CH 19	722.9	3.920	111.73	3.485
TC 0219A HEATER 2	612.6	3.626	1.41	0.044
TC 0219B CH 10	611.9	3.778	0.80	0.025
TC 0919A HTR 9 EXT	612.9	3.806	1.79	0.056
TC 0919B CH 29	614.9	3.810	3.71	0.116
TC 0718C CH 5	616.3	3.778	5.16	0.161
TC 0718D CH 6	615.5	4.504	4.38	0.137
TC 0319A HEATER 3	613.8	3.845	2.60	0.081
TC 0319B CH 12	613.6	3.789	2.45	0.076

RESULTS FOR DUCT WALL THERMOCOUPLES
FEM SERIES 2 TEST 13 RUN 1504 DONE ON 31472 1157

DESCRIPTION	TEMP DEG F	STD DEV	RISE AB INLET T	NORMALIZED TEMP
TC D0B04 DUCT B	610.7	3.777	-0.44	-0.014
TC D0E04 DUCT E	614.2	3.800	3.09	0.096
TC D0F04 DUCT F	637.8	3.750	26.69	0.832
TC D0B08 DUCT B	611.2	3.849	0.03	0.001
TC D0D08 DUCT D	611.4	3.966	0.27	0.008
TC D0F08 DUCT F	655.8	3.685	44.68	1.394
TC D0B12 DUCT B	611.1	3.615	-0.09	-0.003
TC D0E12 DUCT E	650.9	3.618	39.76	1.240
TC D0F12 DUCT F	632.4	3.754	21.29	0.664
TC D0B16 DUCT B	611.3	3.813	0.15	0.005
TC D0D16 DUCT D	631.2	3.750	20.03	0.625
TC D0F16 DUCT F	666.7	3.634	55.58	1.733
TC D0D18 DUCT D	634.8	3.607	23.67	0.738
TC D0E18 DUCT E	659.2	3.755	48.02	1.498
TC DAB18 DUCT AB	613.0	3.793	1.87	0.058
TC DDE18 DUCT DE	644.6	3.724	33.44	1.043
TC DEF18 DUCT EF	679.0	3.598	67.86	2.116
TC D0F18 DUCT F	685.5	3.833	74.39	2.320
TC DFA18 DUCT FA	633.9	3.808	22.78	0.710
TC D0B21 DUCT B	612.1	3.845	0.99	0.031
TC D0D21 DUCT D	635.6	3.796	24.43	0.762
TC D0F21 DUCT F	676.3	3.745	65.11	2.031
TC D0B23 DUCT B	613.7	3.788	2.55	0.080
TC D0D23 DUCT D	636.7	3.579	25.58	0.798
TC D0F23 DUCT F	651.2	3.710	40.04	1.249

RESULTS FOR THERMOCOUPLES IN CHANNEL EXITS
FEM SERIES 2 TEST 13 RUN 1504 DONE ON 31472 1157

DESCRIPTION	TEMP DEG F	STD DEV	RISE AB INLET T	NORMALIZED TEMP
TC EC03 EXIT CH 3	650.7	2.932	39.55	1.234
TC EC16 EXIT CH 16	656.5	3.301	45.32	1.413
TC EC17 EXIT CH 17	684.7	4.542	73.58	2.295
TC EC34 EXIT CH 34	698.7	3.660	87.59	2.732
TC EC35 EXIT CH 35	689.5	3.237	78.35	2.444
TC EC36 EXIT CH 36	667.4	3.678	56.25	1.754
TC EC06 EXIT CH 6	615.9	3.720	4.74	0.148
TC EC08 EXIT CH 8	615.1	3.802	3.93	0.123
TC EC27 EXIT CH 27	626.4	4.635	15.23	0.475
TC EA36 EXIT ANN EF	655.8	4.790	44.69	1.394
TC EA27 EXIT ANN BC	627.9	4.225	16.77	0.523
TC EA28 EXIT ANN C	636.9	4.095	25.75	0.803

RESULTS FOR THERMOCOUPLES INSIDE HEATERS
FFM SERIES 2 TEST 13 RUN 1504 DONE ON 31472 1157

DESCRIPTION	TEMP DEG F	STD DEV	RISE AB INLET T	NORMALIZED TEMP
TC R0118AB HTR 1 INT	640.0	3.829	28.82	0.899
TC R0219AB HTR 2 INT	612.8	3.754	1.64	0.051
TC R0418AB HTR 4 INT	623.5	3.907	12.39	0.386
TC R0518AB HTR 5 INT	643.7	3.850	32.58	1.016
TC R1019AB HEATER 10	612.9	3.975	1.74	0.054
TC R1218AB HEATER 12	646.9	3.688	35.73	1.114
TC R1318DE HEATER 13	658.6	3.726	47.49	1.481
TC R1418AB HEATER 14	688.2	3.728	77.01	2.402
TC R1518AB HEATER 15	848.6	3.707	237.47	7.406
TC R1618AB HEATER 16	628.2	3.968	17.02	0.531
TC R1718AB HEATER 17	621.4	3.778	10.24	0.319
TC R1817AB HEATER 18	611.2	3.737	0.09	0.003
TC R0118BC HEATER 1	633.4	3.804	22.21	0.693
TC R0118CD HEATER 1	632.8	3.637	21.60	0.674
TC R0118DE HEATER 1	623.8	3.788	12.61	0.393
TC R0219BC HEATER 2	613.6	3.826	2.46	0.077
TC R0418BC HEATER 4	627.9	3.782	16.78	0.523
TC R0418CD HEATER 4	628.6	3.841	17.46	0.545
TC R0418DE HEATER 4	634.2	3.786	23.05	0.719
TC R0518BC HEATER 5	645.2	3.613	34.06	1.062
TC R0518CD HEATER 5	653.3	3.577	42.16	1.315
TC R0718BC HEATER 7	614.7	4.012	3.59	0.112
TC R0718CD HEATER 7	614.2	3.659	3.01	0.094
TC R0718DE HEATER 7	612.4	3.834	1.21	0.038
TC R0818BC HEATER 8	611.1	3.847	-0.06	-0.002
TC R1019BC HEATER 10	613.3	3.740	2.18	0.068
TC R1718BC HEATER 17	621.0	3.800	9.81	0.306
TC R1918DE HEATER 19	611.1	3.707	-0.03	-0.001

OPERATING DATA FOR FFM SERIES 2 TEST 13 RUN 1604
WHICH WAS DONE ON 31472 1220

DESCRIPTION	MEAN VALUE	STANDARD DEVIATION
HEATER 1 POWER KW	-0.03	0.0
HEATER 8,18,19 POWER	0.0	0.0
HTR 12,13,14 POWER	-0.08	0.0
HTR 2,7,9,17 POWER	-0.01	0.018
HTR 4,5,11,15 POWER	-0.08	0.0
HTR 3,6,10,16 POWER	14.17	0.018
TOTAL POWER	13.22	0.137
TEST SECT FLOW, GPM	11.43	0.041
TEST SECT INLET PR	10.32	0.086
TEST SECT OUTLET PR	6.36	0.050
TOTAL FLOW, GPM	26.56	0.256
PUMP OUTLET PR, PSI	8.78	0.036
PUMP SPEED, RPM	348.64	1.256
BLOWER SPEED, RPM	57.44	0.552
AIR FLOW (200 F) CFM	0.98	0.004
TC 313 TEST SECT IN	609.21	0.803
TC 317 TEST SECT OUT	641.81	0.963
TC 300 PUMP OUTLET	607.80	0.352
TC 318 RADIATOR IN	641.36	0.787
TC 334 RADIATOR OUT	609.33	0.511
TC 336 PUMP INLET	608.11	0.491
TC 332 RAD AIR IN	316.97	1.482
TC 331 RAD AIR OUT	365.71	11.968

HEAT BALANCE ON SODIUM FLOWING THROUGH BUNDLE
HEAT SUPPLIED BY DUMMY FUEL RODS = 48390.55 BTU/HR
HEAT ADDED TO SODIUM = 50193.71 BTU/HR
PERCENT HEAT BALANCE = 103.73

RESULTS FOR UNGROUNDED JUNCTION THERMOCOUPLES
FFM SERIES 2 TEST 13 RUN 1604 DONE ON 31472 1220

DESCRIPTION	TEMP DEG F	STD DEV	RISE AB INLET T	NORMALIZED TEMP
TC 1504U CH 37	620.4	0.666	11.16	0.355
TC 1706U CH 21	636.2	0.559	27.02	0.860
TC 1807U CH 24	610.2	0.790	0.98	0.031
TC 1108U CH 31	608.9	0.517	-0.31	-0.010
TC 0409U CH 13	609.6	0.716	0.36	0.011
TC 0509U CH 3	610.8	0.679	1.55	0.049
TC 1009U CH 29	609.3	0.650	0.09	0.003
TC 1409U CH 17	612.3	0.946	3.14	0.100
TC 1609U CH 21	737.5	0.687	128.29	4.082
TC 1914U CH 24	609.9	0.822	0.68	0.022
TC 0815U CH 8	609.7	0.835	0.53	0.017
TC 1316U CH 35	646.9	0.787	37.73	1.200
TC 1516U CH 37	691.9	1.049	82.71	2.632
TC 0817U CH 9	609.3	0.650	0.07	0.002
TC 1217U CH 33	638.1	0.892	28.89	0.919
TC 1318U CH 34	651.1	0.639	41.87	1.332
TC 1718U CH 22	667.3	0.955	58.06	1.847
TC 1219U CH 32	635.9	0.867	26.71	0.850
TC 1819U CH 24	611.6	0.811	2.37	0.075
TC 1120U CH 31	621.3	0.609	12.06	0.384
TC 0421U CH 13	613.0	0.755	3.75	0.119
TC 0521U CH 3	627.3	0.514	18.14	0.577
TC 1021U CH 29	615.0	0.947	5.83	0.185
TC 1421U CH 17	653.8	0.900	44.60	1.419
TC 1621U CH 21	737.9	0.946	128.70	4.095

RESULTS FOR GROUNDED JUNCTION THERMOCOUPLES
FFM SERIES 2 TEST 13 RUN 1604 DONE ON 31472 1220

DESCRIPTION	TEMP DEG F	STD DEV	RISE AB INLET T	NORMALIZED TEMP
TC 0118C CH 3	615.9	0.924	6.71	0.213
TC 0618D CH 4	655.4	1.028	46.24	1.471
TC 0618C CH 19	684.8	0.892	75.59	2.405
TC 0219A HEATER 2	610.1	0.840	0.86	0.027
TC 0219B CH 10	609.8	0.769	0.61	0.019
TC 0919A HTR 9 EXT	610.0	0.881	0.78	0.025
TC 0919B CH 29	610.6	0.760	1.42	0.045
TC 0718C CH 5	616.4	0.867	7.21	0.229
TC 0718D CH 6	618.6	1.418	9.38	0.298
TC 0319A HEATER 3	610.0	0.887	0.78	0.025
TC 0319B CH 12	609.8	0.619	0.58	0.018

RESULTS FOR DUCT WALL THERMOCOUPLES
FFM SERIES 2 TEST 13 RUN 1604 DONE ON 31472 1220

DESCRIPTION	TEMP DEG F	STD DEV	RISE AB INLET T	NORMALIZED TEMP
TC DOB04 DUCT B	610.2	0.996	1.02	0.032
TC DOE04 DUCT E	610.0	0.738	0.82	0.026
TC DOF04 DUCT F	628.3	0.787	19.11	0.608
TC DOB08 DUCT B	610.8	0.823	1.64	0.052
TC DOD08 DUCT D	609.7	0.709	0.50	0.016
TC DOF08 DUCT F	665.3	1.055	56.04	1.783
TC DOB12 DUCT B	611.5	0.963	2.26	0.072
TC DOE12 DUCT E	628.4	0.697	19.23	0.612
TC DOF12 DUCT F	660.0	0.935	50.84	1.618
TC DOB16 DUCT B	611.8	0.733	2.54	0.081
TC DOD16 DUCT D	617.4	0.787	8.15	0.259
TC DOF16 DUCT F	681.8	0.920	72.60	2.310
TC DOD18 DUCT D	621.0	0.758	11.83	0.376
TC DOE18 DUCT E	642.4	0.813	33.22	1.057
TC DAB18 DUCT AB	619.5	0.982	10.30	0.328
TC DDE18 DUCT DE	627.7	0.787	18.51	0.589
TC DEF18 DUCT EF	649.3	0.835	40.05	1.274
TC DOF18 DUCT F	696.6	0.955	87.42	2.782
TC DFA18 DUCT FA	721.1	0.812	111.88	3.560
TC DOB21 DUCT B	612.5	0.759	3.34	0.106
TC DOD21 DUCT D	623.0	0.902	13.80	0.439
TC DOF21 DUCT F	743.4	0.924	134.19	4.270
TC DOB23 DUCT B	612.9	0.759	3.72	0.118
TC DOD23 DUCT D	624.2	1.038	15.03	0.478
TC DOF23 DUCT F	730.8	0.809	121.60	3.869

RESULTS FOR THERMOCOUPLES IN CHANNEL EXITS
FFM SERIES 2 TEST 13 RUN 1604 DONE ON 31472 1220

DESCRIPTION	TEMP DEG F	STD DEV	RISE AB INLET T	NORMALIZED TEMP
TC EC03 EXIT CH 3	634.4	0.332	25.15	0.800
TC EC16 EXIT CH 16	636.7	0.769	27.49	0.875
TC EC17 EXIT CH 17	650.8	0.718	41.64	1.325
TC EC34 EXIT CH 34	679.6	0.886	70.44	2.241
TC EC35 EXIT CH 35	705.0	0.530	95.80	3.048
TC EC36 EXIT CH 36	702.4	1.795	93.22	2.966
TC EC06 EXIT CH 6	616.0	0.897	6.79	0.216
TC EC08 EXIT CH 8	612.7	0.929	3.46	0.110
TC EC27 EXIT CH 27	622.8	1.194	13.56	0.431
TC EA36 EXIT ANN EF	660.7	1.877	51.46	1.637
TC EA27 EXIT ANN BC	624.8	1.289	15.55	0.495
TC EA28 EXIT ANN C	634.0	2.064	24.83	0.790

RESULTS FOR THERMOCOUPLES INSIDE HEATERS
FFM SERIES 2 TEST 13 RUN 1604 DONE ON 31472 1220

DESCRIPTION	TEMP DEG F	STD DEV	RISE AB INLET T	NORMALIZED TEMP
TC R0118AB HTR 1 INT	622.8	0.691	13.57	0.432
TC R0219AB HTR 2 INT	611.6	1.005	2.44	0.078
TC R0418AB HTR 4 INT	612.9	0.991	3.65	0.116
TC R0518AB HTR 5 INT	620.0	0.733	10.78	0.343
TC R1019AB HEATER 10	610.4	0.924	1.17	0.037
TC R1218AB HEATER 12	631.8	1.009	22.59	0.719
TC R1318DE HEATER 13	645.4	0.924	36.17	1.151
TC R1418AB HEATER 14	660.3	1.028	51.06	1.625
TC R1518AB HEATER 15	706.7	0.772	97.52	3.103
TC R1618AB HEATER 16	964.0	0.775	354.81	11.289
TC R1718AB HEATER 17	656.4	0.863	47.20	1.502
TC R1817AB HEATER 18	612.2	0.915	2.97	0.094
TC R0118BC HEATER 1	617.9	0.854	8.74	0.278
TC R0118CD HEATER 1	617.0	0.786	7.78	0.248
TC R0118DE HEATER 1	614.1	0.875	4.85	0.154
TC R0219BC HEATER 2	612.1	0.962	2.89	0.092
TC R0418BC HEATER 4	613.8	1.005	4.61	0.147
TC R0418CD HEATER 4	614.6	1.005	5.41	0.172
TC R0418DE HEATER 4	616.2	1.028	7.01	0.223
TC R0518BC HEATER 5	621.2	0.926	11.96	0.381
TC R0518CD HEATER 5	625.9	0.962	16.71	0.532
TC R0718BC HEATER 7	615.0	1.263	5.79	0.184
TC R0718CD HEATER 7	613.8	0.929	4.60	0.146
TC R0718DE HEATER 7	612.2	1.102	2.95	0.094
TC R0818BC HEATER 8	609.9	1.028	0.74	0.024
TC R1019BC HEATER 10	610.5	0.914	1.29	0.041
TC R1718BC HEATER 17	653.4	0.879	44.22	1.407
TC R1918DE HEATER 19	608.8	0.727	-0.40	-0.013

OPERATING DATA FOR FFM SERIES 2 TEST 13 RUN 1704
WHICH WAS DONE ON 31472 1302

DESCRIPTION	MEAN VALUE	STANDARD DEVIATION
HEATER 1 POWER KW	-0.03	0.0
HEATER 8,18,19 POWER	0.0	0.011
HTR 12,13,14 POWER	-0.08	0.0
HTR 2,7,9,17 POWER	14.14	0.025
HTR 4,5,11,15 POWER	-0.08	0.0
HTR 3,6,10,16 POWER	-0.12	0.0
TOTAL POWER	13.41	0.0
TEST SECT FLOW, GPM	11.48	0.046
TEST SECT INLET PR	10.30	0.094
TEST SECT OUTLET PR	6.37	0.053
TOTAL FLOW, GPM	26.59	0.292
PUMP OUTLET PR, PSI	8.74	0.048
PUMP SPEED, RPM	349.70	1.165
BLOWER SPEED, RPM	40.11	1.405
AIR FLOW (200 F) CFM	0.97	0.008
TC 313 TEST SECT IN	605.35	1.334
TC 317 TEST SECT OUT	636.85	1.336
TC 300 PUMP OUTLET	606.10	1.342
TC 318 RADIATOR IN	636.81	1.281
TC 334 RADIATOR OUT	610.93	2.449
TC 336 PUMP INLET	606.38	1.483
TC 332 RAD AIR IN	330.56	5.663
TC 331 RAD AIR OUT	336.11	12.082

HEAT BALANCE ON SODIUM FLOWING THROUGH BUNDLE
HEAT SUPPLIED BY DUMMY FUEL RODS = 48288.10 BTU/HR
HEAT ADDED TO SODIUM = 48754.99 BTU/HR
PERCENT HEAT BALANCE = 100.97

RESULTS FOR UNGROUNDED JUNCTION THERMOCOUPLES
FFM SERIES 2 TEST 13 RUN 1704 DONE ON 31472 1302

DESCRIPTION	TEMP DEG F	STD DEV	RISE AB INLET T	NORMALIZED TEMP
TC 1504U CH 37	605.8	1.409	0.46	0.015
TC 1706U CH 21	698.5	1.337	93.20	2.987
TC 1807U CH 24	646.5	1.246	41.19	1.320
TC 1108U CH 31	605.5	1.325	0.19	0.006
TC 0409U CH 13	605.8	1.388	0.50	0.016
TC 0509U CH 3	606.6	1.358	1.27	0.041
TC 1009U CH 29	605.6	1.334	0.23	0.007
TC 1409U CH 17	606.0	1.399	0.67	0.021
TC 1609U CH 21	676.1	1.330	70.76	2.268
TC 1914U CH 24	609.6	1.299	4.27	0.137
TC 0815U CH 8	607.2	1.293	1.89	0.061
TC 1316U CH 35	625.2	1.269	19.81	0.635
TC 1516U CH 37	647.0	1.268	41.62	1.334
TC 0817U CH 9	606.5	1.450	1.11	0.036
TC 1217U CH 33	617.6	1.270	12.23	0.392
TC 1318U CH 34	628.0	1.361	22.68	0.727
TC 1718U CH 22	769.9	1.365	164.58	5.275
TC 1219U CH 32	616.6	1.209	11.29	0.362
TC 1819U CH 24	627.8	1.373	22.46	0.720
TC 1120U CH 31	607.8	1.334	2.43	0.078
TC 0421U CH 13	608.4	1.216	3.01	0.096
TC 0521U CH 3	619.3	1.270	13.98	0.448
TC 1021U CH 29	606.6	1.300	1.27	0.041
TC 1421U CH 17	627.4	1.250	22.09	0.708
TC 1621U CH 21	739.3	1.323	133.98	4.294

RESULTS FOR GROUNDED JUNCTION THERMOCOUPLES
FFM SERIES 2 TEST 13 RUN 1704 DONE ON 31472 1302

DESCRIPTION	TEMP DEG F	STD DEV	RISE AB INLET T	NORMALIZED TEMP
TC 0118C CH 3	611.4	1.263	6.02	0.193
TC 0618D CH 4	635.4	1.301	30.10	0.965
TC 0618C CH 19	652.8	1.353	47.49	1.522
TC 0219A HEATER 2	609.0	1.271	3.63	0.116
TC 0219B CH 10	607.5	1.219	2.13	0.068
TC 0919A HTR 9 EXT	605.9	1.336	0.60	0.019
TC 0919B CH 29	605.7	1.388	0.35	0.011
TC 0718C CH 5	637.3	1.205	31.99	1.025
TC 0718D CH 6	644.0	1.078	38.70	1.240
TC 0319A HEATER 3	606.3	1.334	0.93	0.030
TC 0319B CH 12	605.7	1.306	0.39	0.013

RESULTS FOR DUCT WALL THERMOCOUPLES
FFM SERIES 2 TEST 13 RUN 1704 DONE ON 31472 1302

DESCRIPTION	TEMP DEG F	STD DEV	RISE AB INLET T	NORMALIZED TEMP
TC D0B04 DUCT B	605.7	1.358	0.38	0.012
TC D0E04 DUCT E	605.5	1.382	0.14	0.004
TC D0F04 DUCT F	606.9	1.400	1.59	0.051
TC D0B08 DUCT B	606.6	1.273	1.29	0.041
TC D0D08 DUCT D	605.5	1.317	0.20	0.006
TC D0F08 DUCT F	615.5	1.319	10.13	0.325
TC D0B12 DUCT B	609.0	1.331	3.70	0.119
TC D0E12 DUCT E	610.1	1.407	4.75	0.152
TC D0F12 DUCT F	643.5	1.320	38.11	1.222
TC D0B16 DUCT B	612.4	1.353	7.07	0.227
TC D0D16 DUCT D	607.6	1.238	2.24	0.072
TC D0F16 DUCT F	648.0	1.321	42.65	1.367
TC D0D18 DUCT D	608.7	1.450	3.36	0.108
TC D0E18 DUCT E	621.8	1.360	16.49	0.529
TC DAB18 DUCT AB	630.1	1.344	24.72	0.792
TC DDE18 DUCT DE	611.9	1.291	6.60	0.212
TC DEF18 DUCT EF	623.3	1.266	17.91	0.574
TC D0F18 DUCT F	649.2	1.301	43.84	1.405
TC DFA18 DUCT FA	681.0	1.277	75.67	2.425
TC D0B21 DUCT B	610.7	1.269	5.39	0.173
TC D0D21 DUCT D	610.4	1.202	5.06	0.162
TC D0F21 DUCT F	669.2	1.267	63.88	2.048
TC D0B23 DUCT B	610.2	1.322	4.88	0.156
TC D0D23 DUCT D	611.1	1.149	5.76	0.185
TC D0F23 DUCT F	638.8	1.253	83.42	2.674

RESULTS FOR THERMOCOUPLES IN CHANNEL EXITS
FFM SERIES 2 TEST 13 RUN 1704 DONE ON 31472 1302

DESCRIPTION	TEMP DEG F	STD DEV	RISE AB INLET T	NORMALIZED TEMP
TC EC03 EXIT CH 3	624.6	1.222	19.30	0.619
TC EC16 EXIT CH 16	622.3	1.081	16.92	0.542
TC EC17 EXIT CH 17	630.5	1.152	25.16	0.806
TC EC34 EXIT CH 34	641.5	1.278	36.17	1.159
TC EC35 EXIT CH 35	657.2	1.375	51.83	1.661
TC EC36 EXIT CH 36	667.4	1.468	62.09	1.990
TC EC06 EXIT CH 6	625.8	1.256	20.40	0.654
TC EC08 EXIT CH 8	610.7	1.309	5.38	0.172
TC EC27 EXIT CH 27	614.6	1.173	9.23	0.296
TC EA36 EXIT ANN EF	658.3	1.625	52.99	1.698
TC EA27 EXIT ANN BC	615.3	1.227	9.99	0.320
TC EA28 EXIT ANN C	622.5	1.066	17.12	0.549

RESULTS FOR THERMOCOUPLES INSIDE HEATERS
FPM SERIES 2 TEST 13 RUN 1704 DONE ON 31472 1302

DESCRIPTION	TEMP DEG F	STD DEV	RISE AB INLET T	NORMALIZED TEMP
TC R0118AB HTR 1 INT	620.7	1.400	15.36	0.492
TC R0219AB HTR 2 INT	617.9	1.303	12.58	0.403
TC R0418AB HTR 4 INT	608.8	1.261	3.41	0.109
TC R0518AB HTR 5 INT	611.6	1.240	6.25	0.200
TC R1019AB HEATER 10	605.4	1.298	0.07	0.002
TC R1218AB HEATER 12	612.6	1.340	7.29	0.234
TC R1318DE HEATER 13	624.9	1.221	19.57	0.627
TC R1418AB HEATER 14	630.7	1.172	25.35	0.813
TC R1518AB HEATER 15	662.8	1.264	57.41	1.840
TC R1618AB HEATER 16	694.7	1.169	89.33	2.863
TC R1718AB HEATER 17	855.9	1.446	250.58	8.032
TC R1817AB HEATER 18	624.1	1.165	18.79	0.602
TC R0118BC HEATER 1	614.7	1.336	9.33	0.299
TC R0118CD HEATER 1	614.1	1.250	8.77	0.281
TC R0118DE HEATER 1	611.1	1.286	5.77	0.185
TC R0219BC HEATER 2	617.0	1.330	11.62	0.372
TC R0418BC HEATER 4	608.7	1.329	3.39	0.109
TC R0418CD HEATER 4	609.0	1.346	3.69	0.118
TC R0418DE HEATER 4	608.6	1.318	3.26	0.104
TC R0518BC HEATER 5	612.3	1.259	6.99	0.224
TC R0518CD HEATER 5	616.9	1.321	11.58	0.371
TC R0718BC HEATER 7	629.4	1.436	24.01	0.770
TC R0718CD HEATER 7	626.1	1.337	20.74	0.665
TC R0718DE HEATER 7	618.4	1.344	13.03	0.418
TC R0818BC HEATER 8	605.8	1.332	0.41	0.013
TC R1019BC HEATER 10	605.9	1.322	0.52	0.017
TC R1718BC HEATER 17	855.0	1.468	249.65	8.002
TC R1918DE HEATER 19	608.9	1.327	3.52	0.113

OPERATING DATA FOR FFM SERIES 2 TEST 13 RUN 1804
WHICH WAS DONE ON 31472 1334

DESCRIPTION	MEAN VALUE	STANDARD DEVIATION
HEATER 1 POWER KW	-0.03	0.009
HEATER 8,18,19 POWER	14.13	0.018
HTR 12,13,14 POWER	-0.08	0.0
HTR 2,7,9,17 POWER	-0.01	0.018
HTR 4,5,11,15 POWER	-0.08	0.0
HTR 3,6,10,16 POWER	-0.12	0.0
TOTAL POWER	13.07	0.131
TEST SECT FLOW, GPM	11.44	0.072
TEST SECT INLET PR	10.30	0.094
TEST SECT OUTLET PR	6.30	0.066
TOTAL FLOW, GPM	26.58	0.286
PUMP OUTLET PR, PSI	8.71	0.067
PUMP SPEED, RPM	349.44	1.574
BLOWER SPEED, RPM	24.27	1.604
AIR FLOW (200 F) CFM	0.97	0.009
TC 313 TEST SECT IN	592.40	0.463
TC 317 TEST SECT OUT	623.52	0.449
TC 300 PUMP OUTLET	592.27	0.298
TC 318 RADIATOR IN	623.39	0.563
TC 334 RADIATOR OUT	595.58	1.199
TC 336 PUMP INLET	592.17	0.359
TC 332 RAD AIR IN	317.52	1.596
TC 331 RAD AIR OUT	341.86	4.135

HEAT BALANCE ON SODIUM FLOWING THROUGH BUNDLE
HEAT SUPPLIED BY DUMMY FUEL RODS = 48253.95 BTU/HR
HEAT ADDED TO SODIUM = 48172.28 BTU/HR
PERCENT HEAT BALANCE = 99.83

RESULTS FOR UNGROUNDED JUNCTION THERMOCOUPLES
FFM SERIES 2 TEST 13 RUN 1804 DONE ON 31472 1334

DESCRIPTION	TEMP DEG F	STD DEV	RISE AB INLET T	NORMALIZED TEMP
TC 1504U CH 37	592.4	0.569	-0.02	-0.001
TC 1706U CH 21	599.7	0.299	7.28	0.234
TC 1807U CH 24	713.1	0.484	120.68	3.871
TC 1108U CH 31	592.1	0.525	-0.32	-0.010
TC 0409U CH 13	592.4	0.590	0.02	0.001
TC 0509U CH 3	592.3	0.405	-0.08	-0.003
TC 1009U CH 29	592.2	0.525	-0.24	-0.008
TC 1409U CH 17	592.2	0.642	-0.18	-0.006
TC 1609U CH 21	608.6	0.463	16.20	0.520
TC 1914U CH 24	609.7	0.239	17.30	0.555
TC 0815U CH 8	599.5	0.449	7.14	0.229
TC 1316U CH 35	608.8	0.418	16.41	0.526
TC 1516U CH 37	624.6	0.514	32.21	1.033
TC 0817U CH 9	595.2	0.648	2.84	0.091
TC 1217U CH 33	601.2	0.656	8.76	0.281
TC 1318U CH 34	611.2	0.525	18.82	0.604
TC 1718U CH 22	653.7	0.289	61.29	1.966
TC 1219U CH 32	600.5	0.449	8.13	0.261
TC 1819U CH 24	728.1	0.360	135.72	4.354
TC 1120U CH 31	594.7	1.015	2.29	0.073
TC 0421U CH 13	593.9	0.320	1.52	0.049
TC 0521U CH 3	598.8	0.290	6.41	0.206
TC 1021U CH 29	593.5	0.348	1.09	0.035
TC 1421U CH 17	607.4	0.282	15.00	0.481
TC 1621U CH 21	653.3	0.234	60.86	1.952

RESULTS FOR GROUNDED JUNCTION THERMOCOUPLES
FFM SERIES 2 TEST 13 RUN 1804 DONE ON 31472 1334

DESCRIPTION	TEMP DEG F	STD DEV	RISE AB INLET T	NORMALIZED TEMP
TC 0118C CH 3	595.2	0.348	2.83	0.091
TC 0618D CH 4	601.1	0.449	8.75	0.281
TC 0618C CH 19	604.3	0.448	11.92	0.382
TC 0219A HEATER 2	596.7	0.247	4.28	0.137
TC 0219B CH 10	595.6	0.418	3.17	0.102
TC 0919A HTR 9 EXT	592.7	0.376	0.30	0.010
TC 0919B CH 29	592.9	0.329	0.52	0.017
TC 0718C CH 5	620.4	0.224	27.96	0.897
TC 0718D CH 6	621.3	0.897	28.90	0.927
TC 0319A HEATER 3	592.6	0.318	0.25	0.008
TC 0319B CH 12	592.9	0.301	0.50	0.016

RESULTS FOR DUCT WALL THERMOCOUPLES
FFM SERIES 2 TEST 13 RUN 1804 DONE ON 31472 1334

DESCRIPTION	TEMP DEG F	STD DEV	RISE AB INLET T	NORMALIZED TEMP
TC DOB04 DUCT B	598.4	0.587	5.97	0.192
TC DOE04 DUCT E	592.4	0.525	0.02	0.001
TC DOF04 DUCT F	592.7	0.463	0.34	0.011
TC DOB08 DUCT B	598.0	0.405	5.62	0.180
TC DOD08 DUCT D	592.1	0.636	-0.26	-0.008
TC DOF08 DUCT F	595.7	0.463	3.26	0.105
TC DOB12 DUCT B	607.4	0.465	15.02	0.482
TC DOE12 DUCT E	594.9	0.299	2.54	0.081
TC DOF12 DUCT F	630.2	0.559	37.76	1.211
TC DOB16 DUCT B	625.4	0.525	33.04	1.060
TC DOD16 DUCT D	593.3	0.417	0.93	0.030
TC DOF16 DUCT F	627.4	0.449	34.98	1.122
TC DOD18 DUCT D	594.8	0.503	2.43	0.078
TC DOE18 DUCT E	606.8	0.503	14.37	0.461
TC DAB18 DUCT AB	685.3	0.233	92.85	2.979
TC DDE18 DUCT DE	597.7	0.441	5.29	0.170
TC DEF18 DUCT EF	609.5	0.463	17.09	0.548
TC DOF18 DUCT F	625.6	0.449	33.18	1.064
TC DFA18 DUCT FA	642.1	0.424	49.66	1.593
TC DOB21 DUCT B	610.1	0.424	17.68	0.567
TC DOD21 DUCT D	595.8	0.328	3.44	0.110
TC DOF21 DUCT F	633.3	0.300	40.88	1.311
TC DOB23 DUCT B	608.3	0.424	15.86	0.509
TC DOD23 DUCT D	596.6	0.499	4.21	0.135
TC DOF23 DUCT F	656.0	0.388	63.64	2.042

RESULTS FOR THERMOCOUPLES IN CHANNEL EXITS
FFM SERIES 2 TEST 13 RUN 1804 DONE ON 31472 1334

DESCRIPTION	TEMP DEG F	STD DEV	RISE AB INLET T	NORMALIZED TEMP
TC EC03 EXIT CH 3	601.9	0.145	9.46	0.303
TC EC16 EXIT CH 16	602.6	0.496	10.22	0.328
TC EC17 EXIT CH 17	607.8	0.102	15.38	0.493
TC EC34 EXIT CH 34	622.3	0.559	29.86	0.958
TC EC35 EXIT CH 35	630.9	0.603	38.51	1.235
TC EC36 EXIT CH 36	641.3	0.527	48.86	1.567
TC EC06 EXIT CH 6	616.8	2.133	24.36	0.781
TC EC08 EXIT CH 8	609.4	2.273	17.03	0.546
TC EC27 EXIT CH 27	600.2	1.379	7.76	0.249
TC EA36 EXIT ANN EF	638.5	0.949	46.07	1.478
TC EA27 EXIT ANN BC	601.4	0.908	8.96	0.287
TC EA28 EXIT ANN C	605.1	1.090	12.70	0.407

RESULTS FOR THERMOCOUPLES INSIDE HEATERS
FFM SERIES 2 TEST 13 RUN 1804 DONE ON 31472 1334

DESCRIPTION	TEMP DEG F	STD DEV	RISE AB INLET T	NORMALIZED TEMP
TC R0118AB HTR 1 INT	600.0	0.382	7.62	0.244
TC R0219AB HTR 2 INT	612.1	0.398	19.71	0.632
TC R0418AB HTR 4 INT	594.2	0.424	1.80	0.058
TC R0518AB HTR 5 INT	594.9	0.479	2.47	0.079
TC R1019AB HEATER 10	593.1	0.449	0.71	0.023
TC R1218AB HEATER 12	596.6	0.679	4.24	0.136
TC R1318DE HEATER 13	608.2	0.329	15.84	0.508
TC R1418AB HEATER 14	614.9	0.199	22.52	0.722
TC R1518AB HEATER 15	609.2	0.512	16.76	0.538
TC R1618AB HEATER 16	637.8	0.266	45.42	1.457
TC R1718AB HEATER 17	657.3	0.292	64.95	2.084
TC R1817AB HEATER 18	850.5	0.329	258.12	8.280
TC R0118BC HEATER 1	596.6	0.381	4.19	0.134
TC R0118CD HEATER 1	596.0	0.569	3.58	0.115
TC R0118DE HEATER 1	595.7	0.520	3.27	0.105
TC R0219BC HEATER 2	606.3	0.718	13.89	0.446
TC R0418BC HEATER 4	593.6	0.767	1.20	0.038
TC R0418CD HEATER 4	593.9	0.280	1.53	0.049
TC R0418DE HEATER 4	593.4	0.703	1.04	0.033
TC R0518BC HEATER 5	595.0	0.581	2.63	0.084
TC R0518CD HEATER 5	596.6	0.603	4.24	0.136
TC R0718BC HEATER 7	619.1	0.544	26.73	0.857
TC R0718CD HEATER 7	618.0	0.506	25.61	0.822
TC R0718DE HEATER 7	619.3	0.544	26.93	0.864
TC R0818BC HEATER 8	594.1	0.784	1.75	0.056
TC R1019BC HEATER 10	592.5	0.581	0.07	0.002
TC R1718BC HEATER 17	660.2	0.520	67.76	2.174
TC R1918DE HEATER 19	613.8	0.588	21.36	0.685

OPERATING DATA FOR FFM SERIES 2 TEST 13 RUN 1904
WHICH WAS DONE ON 31472 1358

DESCRIPTION	MEAN VALUE	STANDARD DEVIATION
HEATER 1 POWER KW	-0.03	0.0
HEATER 8,18,19 POWER	14.10	0.036
HTR 12,13,14 POWER	-0.08	0.0
HTR 2,7,9,17 POWER	-0.02	0.022
HTR 4,5,11,15 POWER	-0.08	0.0
HTR 3,6,10,16 POWER	-0.12	0.0
TOTAL POWER	13.12	0.107
TEST SECT FLOW, GPM	11.40	0.026
TEST SECT INLET PR	10.30	0.077
TEST SECT OUTLET PR	6.33	0.045
TOTAL FLOW, GPM	26.59	0.247
PUMP OUTLET PR, PSI	8.79	0.019
PUMP SPEED, RPM	349.18	0.715
BLOWER SPEED, RPM	72.98	13.769
AIR FLOW (200 F) CFM	0.97	0.004
TC 313 TEST SECT IN	603.54	3.362
TC 317 TEST SECT OUT	633.97	3.409
TC 300 PUMP OUTLET	606.35	2.430
TC 318 RADIATOR IN	633.53	3.332
TC 334 RADIATOR OUT	619.16	2.579
TC 336 PUMP INLET	608.49	2.114
TC 332 RAD AIR IN	318.41	8.771
TC 331 RAD AIR OUT	323.27	6.732

HEAT BALANCE ON SODIUM FLOWING THROUGH BUNDLE
HEAT SUPPLIED BY DUMMY FUEL RODS = 48151.50 BTU/HR
HEAT ADDED TO SODIUM = 46801.70 BTU/HR
PERCENT HEAT BALANCE = 97.20

RESULTS FOR UNGROUNDED JUNCTION THERMOCOUPLES
FFM SERIES 2 TEST 13 RUN 1904 DONE ON 31472 1358

DESCRIPTION	TEMP DEG F	STD DEV	RISE AB INLET T	NORMALIZED TEMP
TC 1504U CH 37	603.5	3.516	-0.01	-0.000
TC 1706U CH 21	604.3	3.800	0.71	0.023
TC 1807U CH 24	643.4	3.853	39.83	1.272
TC 1108U CH 31	603.3	3.432	-0.28	-0.009
TC 0409U CH 13	603.6	3.490	0.04	0.001
TC 0509U CH 3	603.8	3.408	0.28	0.009
TC 1009U CH 29	602.8	3.661	-0.69	-0.022
TC 1409U CH 17	603.2	3.598	-0.31	-0.010
TC 1609U CH 21	605.3	3.648	1.74	0.056
TC 1914U CH 24	713.1	3.709	109.55	3.499
TC 0815U CH 8	693.2	3.866	89.65	2.864
TC 1316U CH 35	609.1	3.549	5.59	0.179
TC 1516U CH 37	618.0	3.626	14.48	0.463
TC 0817U CH 9	641.7	3.945	38.17	1.219
TC 1217U CH 33	605.4	3.798	1.85	0.059
TC 1318U CH 34	609.4	3.773	5.90	0.188
TC 1718U CH 22	632.3	3.359	28.81	0.920
TC 1219U CH 32	605.8	3.359	2.30	0.073
TC 1819U CH 24	740.5	3.790	136.97	4.375
TC 1120U CH 31	602.8	3.157	-0.70	-0.022
TC 0421U CH 13	606.6	3.487	3.06	0.098
TC 0521U CH 3	608.8	3.589	5.26	0.168
TC 1021U CH 29	604.1	3.287	0.53	0.017
TC 1421U CH 17	609.8	3.632	6.21	0.198
TC 1621U CH 21	629.9	3.555	26.40	0.843

RESULTS FOR GROUNDED JUNCTION THERMOCOUPLES
FFM SERIES 2 TEST 13 RUN 1904 DONE ON 31472 1358

DESCRIPTION	TEMP DEG F	STD DEV	RISE AB INLET T	NORMALIZED TEMP
TC 0118C CH 3	608.3	3.574	4.75	0.152
TC 0618D CH 4	609.4	3.589	5.83	0.186
TC 0618C CH 19	608.7	3.462	5.18	0.165
TC 0219A HEATER 2	624.0	3.555	20.46	0.654
TC 0219B CH 10	617.3	3.399	13.79	0.440
TC 0919A HTR 9 EXT	605.9	3.555	2.32	0.074
TC 0919B CH 29	605.2	3.283	1.63	0.052
TC 0718C CH 5	645.8	3.689	42.21	1.348
TC 0718D CH 6	640.1	2.162	36.59	1.169
TC 0319A HEATER 3	605.3	3.352	1.77	0.057
TC 0319B CH 12	604.3	3.492	0.77	0.025

RESULTS FOR DUCT WALL THERMCCOUPLES
FFM SERIES 2 TEST 13 RUN 1904 DONE ON 31472 1358

DESCRIPTION	TEMP DEG F	STD DEV	RISE AB INLET T	NORMALIZED TEMP
TC DOB04 DUCT B	626.4	3.729	22.86	0.730
TC DOE04 DUCT E	602.8	3.675	-0.75	-0.024
TC DOF04 DUCT F	602.6	3.600	-0.95	-0.030
TC DOB08 DUCT B	617.1	3.455	13.55	0.433
TC DOD08 DUCT D	602.5	3.570	-1.03	-0.033
TC DOF08 DUCT F	603.8	3.499	0.23	0.007
TC DOB12 DUCT B	652.8	3.563	49.23	1.572
TC DOE12 DUCT E	603.7	3.284	0.15	0.005
TC DOF12 DUCT F	619.3	3.383	15.73	0.502
TC DOB16 DUCT B	688.6	3.517	85.05	2.717
TC DOD16 DUCT D	603.7	3.383	0.17	0.005
TC DOF16 DUCT F	619.6	3.485	16.03	0.512
TC DOD18 DUCT D	604.3	3.553	0.81	0.026
TC DOE18 DUCT E	609.4	3.284	5.89	0.188
TC DAB18 DUCT AB	680.9	3.575	77.37	2.471
TC DDE18 DUCT DE	605.5	3.309	1.98	0.063
TC DEF18 DUCT EF	613.4	3.357	9.88	0.316
TC DOF18 DUCT F	619.5	3.485	15.93	0.509
TC DFA18 DUCT FA	628.2	3.306	24.63	0.787
TC DOB21 DUCT B	640.1	3.231	36.53	1.167
TC DOD21 DUCT D	604.8	3.497	1.29	0.041
TC DOF21 DUCT F	623.2	3.578	19.65	0.628
TC DOB23 DUCT B	647.9	3.253	44.32	1.416
TC DOD23 DUCT D	605.4	3.027	1.90	0.061
TC DOF23 DUCT F	634.6	3.575	31.10	0.993

RESULTS FOR THERMOCOUPLES IN CHANNEL EXITS
FFM SERIES 2 TEST 13 RUN 1904 DONE ON 31472 1358

DESCRIPTION	TEMP DEG F	STD DEV	RISE AB INLET T	NORMALIZED TEMP
TC EC03 EXIT CH 3	610.2	3.614	6.70	0.214
TC EC16 EXIT CH 16	608.4	3.555	4.82	0.154
TC EC17 EXIT CH 17	611.0	3.492	7.45	0.238
TC EC34 EXIT CH 34	614.8	3.523	11.21	0.358
TC EC35 EXIT CH 35	619.7	3.049	16.18	0.517
TC EC36 EXIT CH 36	624.4	3.049	20.84	0.666
TC EC06 EXIT CH 6	678.5	4.029	74.97	2.395
TC EC08 EXIT CH 8	680.8	3.923	77.24	2.467
TC EC27 EXIT CH 27	620.2	3.197	16.64	0.532
TC EA36 EXIT ANN EF	623.4	2.682	19.82	0.633
TC EA27 EXIT ANN BC	623.4	2.804	19.84	0.634
TC EA28 EXIT ANN C	614.0	3.263	10.48	0.335

RESULTS FOR THERMOCOUPLES INSIDE HEATERS
FFM SERIES 2 TEST 13 RUN 1904 DONE ON 31472 1358

DESCRIPTION	TEMP DEG F	STD DEV	RISE AB INLET T	NORMALIZED TEMP
TC R0118AB HTR 1 INT	614.6	3.603	11.04	0.353
TC R0219AB HTR 2 INT	671.2	3.837	67.70	2.162
TC R0418AB HTR 4 INT	606.9	3.539	3.41	0.109
TC R0518AB HTR 5 INT	605.8	3.522	2.31	0.074
TC R1019AB HEATER 10	604.9	3.522	1.33	0.042
TC R1218AB HEATER 12	602.9	2.866	-0.61	-0.019
TC R1318DE HEATER 13	608.8	3.414	5.25	0.168
TC R1418AB HEATER 14	613.0	3.522	9.42	0.301
TC R1518AB HEATER 15	609.2	3.492	5.69	0.182
TC R1618AB HEATER 16	624.6	3.551	21.05	0.672
TC R1718AB HEATER 17	635.4	3.786	31.90	1.019
TC R1817AB HEATER 18	695.8	3.621	92.27	2.947
TC R0118BC HEATER 1	611.6	3.420	8.05	0.257
TC R0118CD HEATER 1	611.4	3.365	7.91	0.253
TC R0118DE HEATER 1	612.4	3.305	8.90	0.284
TC R0219BC HEATER 2	655.0	3.450	51.45	1.643
TC R0418BC HEATER 4	607.0	3.497	3.43	0.110
TC R0418CD HEATER 4	606.9	3.432	3.38	0.108
TC R0418DE HEATER 4	605.6	3.391	2.05	0.065
TC R0518BC HEATER 5	607.1	3.432	3.56	0.114
TC R0518CD HEATER 5	609.5	3.365	6.01	0.192
TC R0718BC HEATER 7	662.2	3.483	58.68	1.874
TC R0718CD HEATER 7	665.8	3.454	62.31	1.990
TC R0718DE HEATER 7	695.0	3.618	91.42	2.920
TC R0818BC HEATER 8	627.0	3.384	23.48	0.750
TC R1019BC HEATER 10	605.1	3.089	1.54	0.049
TC R1718BC HEATER 17	638.5	3.391	35.00	1.118
TC R1918DE HEATER 19	839.0	3.405	235.44	7.520

OPERATING DATA FOR FFM SERIES 2 TEST 14 RUN 101
WHICH WAS DONE ON 42572 941

DESCRIPTION	MEAN VALUE	STANDARD DEVIATION
HEATER 1 POWER KW	8.93	0.014
HEATER 8,18,19 POWER	39.33	0.033
HTR 12,13,14 POWER	13.11	0.033
HTR 2,7,9,17 POWER	44.25	0.067
HTR 4,5,11,15 POWER	26.00	0.052
HTR 3,6,10,16 POWER	34.78	0.049
TOTAL POWER	165.22	0.179
TEST SECT FLOW, GPM	54.59	0.100
TEST SECT INLET PR	33.55	0.126
TEST SECT OUTLET PR	8.89	0.079
TOTAL FLOW, GPM	114.02	0.896
PUMP OUTLET PR, PSI	35.81	0.038
PUMP SPEED, RPM	1481.40	1.949
BLOWER SPEED, RPM	650.52	0.455
AIR FLOW (200 F) CFM	5.93	0.143
TC 313 TEST SECT IN	647.02	0.166
TC 317 TEST SECT OUT	725.30	0.159
TC 300 PUMP OUTLET	648.39	0.130
TC 318 RADIATOR IN	724.74	0.270
TC 334 RADIATOR OUT	639.95	0.280
TC 336 PUMP INLET	646.43	0.280
TC 332 RAD AIR IN	78.59	0.537
TC 331 RAD AIR OUT	185.87	0.363

HEAT BALANCE ON SODIUM FLOWING THROUGH BUNDLE
HEAT SUPPLIED BY DUMMY FUEL RODS = 568255.81 BTU/HR
HEAT ADDED TO SODIUM = 569957.19 BTU/HR
PERCENT HEAT BALANCE = 100.30

RESULTS FOR UNGROUNDED JUNCTION THERMOCOUPLES
FFM SERIES 2 TEST 14 RUN 101 DONE ON 42572 941

DESCRIPTION	TEMP DEG F	STD DEV	RISE AB INLET T	NORMALIZED TEMP
TC 1504U CH 37	660.6	0.296	13.59	0.174
TC 1706U CH 21	691.8	0.903	44.78	0.574
TC 1807U CH 24	714.4	0.378	67.34	0.863
TC 1108U CH 31	673.0	0.189	26.01	0.333
TC 0409U CH 13	687.9	0.472	40.84	0.523
TC 0509U CH 3	688.6	0.590	41.62	0.533
TC 1009U CH 29	672.8	0.623	25.73	0.330
TC 1409U CH 17	673.0	0.456	26.01	0.333
TC 1609U CH 21	698.3	0.451	51.33	0.658
TC 1914U CH 24	712.9	0.221	65.88	0.844
TC 0815U CH 8	752.2	0.280	105.17	1.348
TC 1316U CH 35	694.2	0.120	47.14	0.604
TC 1516U CH 37	702.0	0.408	54.94	0.704
TC 0817U CH 9	762.6	0.844	115.57	1.481
TC 1217U CH 33	685.1	0.386	38.11	0.488
TC 1318U CH 34	686.4	0.499	39.34	0.504
TC 1718U CH 22	748.7	0.671	101.69	1.303
TC 1219U CH 32	687.0	0.543	40.02	0.513
TC 1819U CH 24	755.5	0.182	108.52	1.390
TC 1120U CH 31	695.3	0.186	48.31	0.619
TC 0421U CH 13	729.4	0.710	82.41	1.056
TC 0521U CH 3	727.5	0.369	80.48	1.031
TC 1021U CH 29	697.1	0.374	50.04	0.641
TC 1421U CH 17	709.6	0.984	62.59	0.802
TC 1621U CH 21	748.7	0.649	101.66	1.303

RESULTS FOR GROUNDED JUNCTION THERMOCOUPLES
FFM SERIES 2 TEST 14 RUN 101 DONE ON 42572 941

DESCRIPTION	TEMP DEG F	STD DEV	RISE AB INLET T	NORMALIZED TEMP
TC 0118C CH 3	737.6	2.006	90.56	1.160
TC 0618D CH 4	731.1	1.204	84.06	1.077
TC 0618C CH 19	725.7	0.283	78.70	1.008
TC 0219A HEATER 2	759.3	1.530	112.27	1.439
TC 0219B CH 10	748.6	0.848	101.54	1.301
TC 0919A HTR 9 EXT	754.5	1.292	107.51	1.378
TC 0919B CH 29	735.6	0.745	88.56	1.135
TC 0718C CH 5	764.1	1.470	117.07	1.500
TC 0718D CH 6	757.6	1.379	110.54	1.416
TC 0319A HEATER 3	731.8	0.477	84.78	1.086
TC 0319B CH 12	718.7	0.950	71.68	0.918

RESULTS FOR DUCT WALL THERMCCOUPLES
FFM SERIES 2 TEST 14 RUN 101 DONE ON 42572 941

DESCRIPTION	TEMP DEG F	STD DEV	RISE AB INLET T	NORMALIZED TEMP
TC DOB04 DUCT B	655.8	0.574	8.78	0.112
TC DOE04 DUCT E	648.5	0.182	1.44	0.018
TC DOF04 DUCT F	650.6	0.130	3.55	0.045
TC DOB08 DUCT B	657.0	0.374	9.98	0.128
TC DOD08 DUCT D	653.8	0.250	6.83	0.088
TC DOF08 DUCT F	660.4	0.182	13.41	0.172
TC DOB12 DUCT B	674.2	0.182	27.16	0.348
TC DOE12 DUCT E	661.6	1.020	14.59	0.187
TC DOF12 DUCT F	672.1	0.378	25.06	0.321
TC DOB16 DUCT B	705.5	0.614	58.44	0.749
TC DOD16 DUCT D	661.1	1.461	14.06	0.180
TC DOF16 DUCT F	681.4	0.320	34.36	0.440
TC DOD18 DUCT D	667.2	0.567	20.14	0.258
TC DOE18 DUCT E	674.4	0.634	27.37	0.351
TC DAB18 DUCT AB	701.7	0.499	54.68	0.701
TC DDE18 DUCT DE	664.5	0.130	17.49	0.224
TC DEF18 DUCT EF	677.0	0.619	30.02	0.385
TC DOF18 DUCT F	687.4	0.285	40.39	0.518
TC DFA18 DUCT FA	696.7	0.239	49.68	0.637
TC DOB21 DUCT B	685.4	0.388	38.42	0.492
TC DOD21 DUCT D	673.5	0.277	26.53	0.340
TC DOF21 DUCT F	704.1	1.323	57.08	0.731
TC DOB23 DUCT B	698.6	0.405	51.54	0.660
TC DOD23 DUCT D	677.9	3.675	30.86	0.395
TC DOF23 DUCT F	719.0	0.448	71.96	0.922

RESULTS FOR THERMOCOUPLES IN CHANNEL EXITS
FFM SERIES 2 TEST 14 RUN 101 DONE ON 42572 941

DESCRIPTION	TEMP DEG F	STD DEV	RISE AB INLET T	NORMALIZED TEMP
TC EC03 EXIT CH 3	736.2	0.336	89.22	1.143
TC EC16 EXIT CH 16	709.6	0.095	62.62	0.802
TC EC17 EXIT CH 17	705.5	0.270	58.50	0.750
TC EC34 EXIT CH 34	701.1	0.539	54.07	0.693
TC EC35 EXIT CH 35	709.9	0.120	62.89	0.806
TC EC36 EXIT CH 36	718.7	0.457	71.70	0.919
TC EC06 EXIT CH 6	765.7	0.289	118.68	1.521
TC EC08 EXIT CH 8	765.3	0.193	118.29	1.516
TC EC27 EXIT CH 27	705.8	0.301	58.83	0.754
TC EA36 EXIT ANN EF	715.0	0.114	67.94	0.871
TC EA27 EXIT ANN BC	711.7	0.126	64.66	0.828
TC EA28 EXIT ANN C	704.6	0.495	57.63	0.738

RESULTS FOR THERMOCOUPLES INSIDE HEATERS
FFM SERIES 2 TEST 14 RUN 101 DONE ON 42572 941

DESCRIPTION	TEMP DEG F	STD DEV	RISE AB INLET T	NORMALIZED TEMP
TC R0118AB HTR 1 INT	799.7	0.342	152.69	1.956
TC R0219AB HTR 2 INT	822.2	0.424	175.16	2.244
TC R0418AB HTR 4 INT	787.9	3.341	140.92	1.806
TC R0518AB HTR 5 INT	757.5	0.953	110.53	1.416
TC R1019AB HEATER 10	742.2	18.132	95.17	1.219
TC R1218AB HEATER 12	715.9	0.674	68.87	0.882
TC R1318DE HEATER 13	736.3	0.465	89.25	1.144
TC R1418AB HEATER 14	734.0	3.133	86.99	1.115
TC R1518AB HEATER 15	779.5	10.103	132.46	1.697
TC R1618AB HEATER 16	808.2	2.037	161.20	2.065
TC R1718AB HEATER 17	819.8	1.437	172.74	2.213
TC R1817AB HEATER 18	820.5	0.612	173.46	2.223
TC R0118BC HEATER 1	806.1	0.758	159.10	2.039
TC R0118CD HEATER 1	817.6	0.358	170.54	2.185
TC R0118DE HEATER 1	803.1	0.602	156.12	2.000
TC R0219BC HEATER 2	824.6	4.122	177.63	2.276
TC R0418BC HEATER 4	768.3	0.421	121.25	1.554
TC R0418CD HEATER 4	760.1	0.522	113.05	1.448
TC R0418DE HEATER 4	753.3	1.015	106.26	1.361
TC R0518BC HEATER 5	758.4	0.735	111.42	1.428
TC R0518CD HEATER 5	770.3	1.315	123.32	1.580
TC R0718BC HEATER 7	826.3	1.172	179.26	2.297
TC R0718CD HEATER 7	825.1	1.292	178.12	2.282
TC R0718DE HEATER 7	828.4	1.384	181.39	2.324
TC R0818BC HEATER 8	872.5	0.511	225.51	2.889
TC R1019BC HEATER 10	765.8	7.214	118.80	1.522
TC R1718BC HEATER 17	821.6	2.557	174.55	2.236
TC R1918DE HEATER 19	852.0	0.408	205.00	2.627

OPERATING DATA FOR FFM SERIES 2 TEST 14 RUN 201
WHICH WAS DONE ON 42572 1023

DESCRIPTION	MEAN VALUE	STANDARD DEVIATION
HEATER 1 POWER KW	8.97	0.015
HEATER 8,18,19 POWER	13.52	0.063
HTR 12,13,14 POWER	38.95	0.033
HTR 2,7,9,17 POWER	26.39	0.110
HTR 4,5,11,15 POWER	44.50	0.509
HTR 3,6,10,16 POWER	35.21	0.049
TOTAL POWER	165.82	0.449
TEST SECT FLOW, GPM	54.37	0.072
TEST SECT INLET PR	33.59	0.074
TEST SECT OUTLET PR	8.81	0.032
TOTAL FLOW, GPM	113.58	1.402
PUMP OUTLET PR, PSI	35.78	0.049
PUMP SPEED, RPM	1482.00	1.414
BLOWER SPEED, RPM	652.62	0.661
AIR FLOW (200 F) CFM	5.93	0.213
TC 313 TEST SECT IN	640.61	0.174
TC 317 TEST SECT OUT	720.09	0.471
TC 300 PUMP OUTLET	642.26	0.193
TC 318 RADIATOR IN	718.73	0.441
TC 334 RADIATOR OUT	635.09	0.355
TC 336 PUMP INLET	641.19	0.256
TC 332 RAD AIR IN	78.08	0.320
TC 331 RAD AIR OUT	184.14	0.311

HEAT BALANCE ON SODIUM FLOWING THROUGH BUNDLE
HEAT SUPPLIED BY DUMMY FUEL RODS = 572149.00 BTU/HR
HEAT ADDED TO SODIUM = 577265.88 BTU/HR
PERCENT HEAT BALANCE = 100.89

RESULTS FOR UNGROUNDED JUNCTION THERMOCOUPLES
FFM SERIES 2 TEST 14 RUN 201 DONE ON 42572 1023

DESCRIPTION	TEMP DEG F	STD DEV	RISE AB INLET T	NORMALIZED TEMP
TC 1504U CH 37	662.5	1.610	21.91	0.278
TC 1706U CH 21	672.8	0.320	32.19	0.409
TC 1807U CH 24	667.6	0.270	27.01	0.343
TC 1108U CH 31	688.7	1.756	48.13	0.611
TC 0409U CH 13	707.7	2.924	67.09	0.852
TC 0509U CH 3	706.6	3.714	65.97	0.837
TC 1009U CH 29	673.5	0.236	32.94	0.418
TC 1409U CH 17	708.5	0.584	67.92	0.862
TC 1609U CH 21	689.5	0.189	48.86	0.620
TC 1914U CH 24	668.2	0.534	27.58	0.350
TC 0815U CH 8	688.2	0.466	47.58	0.604
TC 1316U CH 35	729.2	1.396	88.58	1.124
TC 1516U CH 37	700.3	3.690	59.68	0.758
TC 0817U CH 9	700.3	0.320	59.74	0.758
TC 1217U CH 33	722.2	1.096	81.60	1.036
TC 1318U CH 34	711.5	1.315	70.86	0.900
TC 1718U CH 22	714.9	0.628	74.28	0.943
TC 1219U CH 32	725.9	0.929	85.27	1.082
TC 1819U CH 24	636.0	0.231	45.39	0.576
TC 1120U CH 31	729.1	1.865	88.48	1.123
TC 0421U CH 13	777.7	3.971	137.06	1.740
TC 0521U CH 3	781.2	5.131	140.57	1.784
TC 1021U CH 29	718.1	1.427	77.51	0.984
TC 1421U CH 17	770.8	2.009	130.22	1.653
TC 1621U CH 21	722.9	0.861	82.30	1.045

RESULTS FOR GROUNDED JUNCTION THERMOCOUPLES
FFM SERIES 2 TEST 14 RUN 201 DONE ON 42572 1023

DESCRIPTION	TEMP DEG F	STD DEV	RISE AB INLET T	NORMALIZED TEMP
TC 0118C CH 3	758.7	1.508	118.05	1.499
TC 0618D CH 4	746.3	0.713	105.72	1.342
TC 0618C CH 19	739.1	1.284	98.46	1.250
TC 0219A HEATER 2	727.1	1.198	86.51	1.098
TC 0219B CH 10	722.8	1.262	82.24	1.044
TC 0919A HTR 9 EXT	724.1	1.090	83.50	1.060
TC 0919B CH 29	715.6	1.034	74.96	0.952
TC 0718C CH 5	727.8	2.863	87.22	1.107
TC 0718D CH 6	720.9	1.204	80.27	1.019
TC 0319A HEATER 3	743.5	1.188	102.92	1.306
TC 0319B CH 12	735.9	1.624	95.31	1.210

RESULTS FOR DUCT WALL THERMCCOUPLES
FFM SERIES 2 TEST 14 RUN 201 DONE ON 42572 1023

DESCRIPTION	TEMP DEG F	STD DEV	RISE AB INLET T	NORMALIZED TEMP
TC DOB04 DUCT B	643.7	1.520	3.13	0.040
TC DOE04 DUCT E	646.3	0.270	5.74	0.073
TC DOF04 DUCT F	646.6	0.405	5.95	0.076
TC DOB08 DUCT B	646.5	0.435	5.92	0.075
TC DOD08 DUCT D	657.8	0.367	17.18	0.218
TC DOF08 DUCT F	657.8	0.552	17.23	0.219
TC DOB12 DUCT B	653.5	0.599	12.94	0.164
TC DOE12 DUCT E	674.7	0.460	34.06	0.432
TC DOF12 DUCT F	656.1	0.344	15.46	0.196
TC DOB16 DUCT B	666.9	1.804	26.26	0.333
TC DOD16 DUCT D	677.0	0.433	36.43	0.462
TC DOF16 DUCT F	670.1	0.668	29.49	0.374
TC DOD18 DUCT D	677.1	1.228	36.48	0.463
TC DOE18 DUCT E	684.2	0.674	43.58	0.553
TC DAB18 DUCT AB	660.9	1.688	20.33	0.258
TC DDE18 DUCT DE	676.6	0.596	35.96	0.456
TC DEF18 DUCT EF	681.6	0.520	40.98	0.520
TC DOF18 DUCT F	678.3	0.899	37.65	0.478
TC DFA18 DUCT FA	673.7	1.919	33.06	0.420
TC DOB21 DUCT B	681.5	0.294	40.94	0.520
TC DOD21 DUCT D	692.0	0.567	51.44	0.653
TC DOF21 DUCT F	694.4	1.490	53.75	0.682
TC DOB23 DUCT B	682.1	0.932	41.47	0.526
TC DOD23 DUCT D	703.6	1.806	63.01	0.800
TC DOF23 DUCT F	689.4	0.806	48.75	0.619

RESULTS FOR THERMOCOUPLES IN CHANNEL EXITS
FFM SERIES 2 TEST 14 RUN 201 DONE ON 42572 1023

DESCRIPTION	TEMP DEG F	STD DEV	RISE AB INLET T	NORMALIZED TEMP
TC EC03 EXIT CH 3	769.4	5.122	128.81	1.635
TC EC16 EXIT CH 16	751.8	3.442	111.23	1.412
TC EC17 EXIT CH 17	725.9	3.239	85.31	1.083
TC EC34 EXIT CH 34	719.6	1.448	79.02	1.003
TC EC35 EXIT CH 35	715.7	2.231	75.13	0.954
TC EC36 EXIT CH 36	706.4	0.538	65.84	0.836
TC EC06 EXIT CH 6	727.8	1.370	87.22	1.107
TC EC08 EXIT CH 8	701.0	0.625	60.39	0.767
TC EC27 EXIT CH 27	707.0	1.090	66.37	0.843
TC EA36 EXIT ANN EF	711.1	1.642	70.47	0.895
TC EA27 EXIT ANN BC	709.3	1.224	68.74	0.873
TC EA28 EXIT ANN C	715.0	1.706	74.40	0.944

RESULTS FOR THERMOCOUPLES INSIDE HEATERS
FFM SERIES 2 TEST 14 RUN 201 DONE ON 42572 1023

DESCRIPTION	TEMP DEG F	STD DEV	RISE AB INLET T	NORMALIZED TEMP
TC R0118AB HTR 1 INT	796.1	1.395	155.46	1.973
TC R0219AB HTR 2 INT	749.0	1.084	108.44	1.377
TC R0418AB HTR 4 INT	859.8	3.811	219.15	2.782
TC R0518AB HTR 5 INT	822.8	3.363	182.23	2.313
TC R1019AB HEATER 10	713.5	26.296	72.90	0.925
TC R1218AB HEATER 12	809.3	0.457	168.64	2.141
TC R1318DE HEATER 13	860.9	0.403	220.27	2.796
TC R1418AB HEATER 14	836.9	0.716	196.34	2.492
TC R1518AB HEATER 15	801.7	24.237	161.12	2.045
TC R1618AB HEATER 16	790.7	0.841	150.09	1.905
TC R1718AB HEATER 17	753.6	0.807	112.96	1.434
TC R1817AB HEATER 18	708.2	1.394	67.59	0.858
TC R0118BC HEATER 1	818.0	3.631	177.44	2.252
TC R0118CD HEATER 1	830.0	3.412	189.39	2.404
TC R0118DE HEATER 1	821.8	3.294	181.15	2.300
TC R0219BC HEATER 2	753.8	2.714	113.22	1.437
TC R0418BC HEATER 4	842.4	5.969	201.79	2.562
TC R0418CD HEATER 4	831.4	5.873	190.75	2.421
TC R0418DE HEATER 4	836.0	6.593	195.40	2.480
TC R0518BC HEATER 5	831.3	6.321	190.67	2.420
TC R0518CD HEATER 5	823.6	4.853	182.99	2.323
TC R0718BC HEATER 7	759.8	0.805	119.17	1.513
TC R0718CD HEATER 7	757.8	0.744	117.17	1.487
TC R0718DE HEATER 7	747.5	0.893	106.89	1.357
TC R0818BC HEATER 8	736.6	1.362	95.95	1.218
TC R1019BC HEATER 10	753.6	1.674	112.98	1.434
TC R1718BC HEATER 17	755.1	1.338	114.46	1.453
TC R1918DE HEATER 19	732.7	3.350	92.10	1.169

ORNL-TM-4113
UC-79, UC-79e, UC-79p

Internal Distribution

1. S. E. Beall
2. M. Bender
3. J. R. Buchanan
4. D. L. Clark
5. C. W. Collins
6. W. B. Cottrell
7. F. L. Culler, Jr.
8–17. M. H. Fontana
18. D. N. Fry
19. P. A. Gnadt
20. A. G. Grindell
21. W. O. Harms
22. H. W. Hoffman
23. T. S. Kress
24. R. N. Lyon
25. R. E. MacPherson
26. L. C. Oakes
27. L. F. Parsly
28. Myrtleen Sheldon
29. M. J. Skinner
30. D. G. Thomas
31. D. B. Trauger
32. J. L. Wantland
33. T. Kerlin (Consultant)
34. R. Saxe (Consultant)
35–36. Central Research Library
37. Y-12 Document Reference Section
38–40. Laboratory Records Dept.
41. Laboratory Records Dept. (RC)

External Distribution

42–43. Director, USAEC Division of Reactor Development and Technology, Washington, D.C. 20545

44. USAEC-RRD Senior Site Representative, Oak Ridge National Laboratory, P.O. Box X, Oak Ridge, Tennessee 37830

45. Research and Technical Support Division, USAEC Oak Ridge Operations Office, P.O. Box E, Oak Ridge, Tennessee 37830

46–289. For distribution as shown in TID-4500 Distribution Category, UC-79p and UC-79e, Liquid Metal Fast Breeder Reactors (Safety and Reactor Core Systems)