OAK RIDGE NATIONAL LABORATORY LIBRARIES
3 4456 0550203 3

CENTRAL RESEARCH LIBRARY

ORNL-TM-4410

cy. 48

ISOTOPE PROGRAM (NT) PROGRESS REPORT FOR QUARTER ENDING SEPTEMBER 30, 1973

J. H. Gillette

[redacted]

OAK RIDGE NATIONAL LABORATORY
CENTRAL RESEARCH LIBRARY
DOCUMENT COLLECTION
LIBRARY LOAN COPY
DO NOT TRANSFER TO ANOTHER PERSON
If you wish someone else to see this document, send in name with document and the library will arrange a loan.
UCN-7969
(3 3-67)

OAK RIDGE NATIONAL LABORATORY
OPERATED BY UNION CARBIDE CORPORATION • FOR THE U.S. ATOMIC ENERGY COMMISSION

This report was prepared as an account of work sponsored by the United States Government. Neither the United States nor the United States Atomic Energy Commission, nor any of their employees, nor any of their contractors, subcontractors, or their employees, makes any warranty, express or implied, or assumes any legal liability or responsibility for the accuracy, completeness or usefulness of any information, apparatus, product or process disclosed, or represents that its use would not infringe privately owned rights.

ORNL-TM-4410

Contract No. W-7405-eng-26

ISOTOPES DEVELOPMENT CENTER

ISOTOPE PROGRAM (NT) PROGRESS REPORT FOR QUARTER ENDING SEPTEMBER 30, 1973

J. H. Gillette

Isotopes Division

NOVEMBER 1973

NOTICE This document contains information of a preliminary nature and was prepared primarily for internal use at the Oak Ridge National Laboratory. It is subject to revision or correction and therefore does not represent a final report.

OAK RIDGE NATIONAL LABORATORY
Oak Ridge, Tennessee 37830
operated by
UNION CARBIDE CORPORATION
for the
U.S. ATOMIC ENERGY COMMISSION

OAK RIDGE NATIONAL LABORATORY LIBRARIES

3 4456 0550203 3

CONTENTS

	Page
TARGET FABRICATION AND DEVELOPMENT	1
High Neutron Yield Tritium Targets	1
NASA Skylab Brazing Experiment	2
Lithium Metal Neutron Dosimeters	3
ISOTOPIC SEPARATIONS	4
Source Development	4
RADIOISOTOPIC SEPARATIONS	5
Plutonium-241 Separation	5
Plutonium-244 Product Recovery	6
Beryllium-10 Charge Recovery	6
Promethium-147	7
180° OAK RIDGE SECTOR SEPARATOR DEVELOPMENT	7
CHEMICAL PROCESSING	8
Material in Process	8
Material Added to Inventory	8
ISOTOPES PREPARATIONS AND SALES	9
ADMINISTRATIVE	11

ISOTOPE PROGRAM (NT) PROGRESS REPORT FOR QUARTER ENDING SEPTEMBER 30, 1973

J. H. Gillette

TARGET FABRICATION AND DEVELOPMENT

High Neutron Yield Tritium Targets

At the request of Lawrence Livermore Laboratories (LLL), 22-cm-diam targets of ^{3}H-Ti were prepared for use on their 400-keV deuteron accelerator. Neutrons produced by the reaction $^3H_1(^3T_1,{}^0n_1)^4He_2$ are used at that facility for activation analysis, dosimetry, diagnostics, and a variety of biological experiments. An adequate neutron field is considered to be $\sim 7 \times 10^{11}$ $^0n_1$/sec·cm^2 which requires a total neutron yield of $\sim 3 \times 10^{12}$ $^0n_1$/sec from the target. To this end, the target was designed to withstand an influx of deuterium atomic ions of 8 mA and has operated at beam currents up to 12 mA with yields of 3×10^{12} $^0n_1$/sec. Because of the high power density the target is rotated at 1100 rpm and is water-cooled on the back side of the target. Even with this transient beam impingement and cooling, the surface temperature of the target has been measured at 500-600°C.

Preparation of the tritium-containing target by the ORNL Isotope Target Laboratory was performed by vapor blasting a blank substrate formed from "Amzirc" sheet (1-mm thickness) previously hydroformed at LLL to have a radius of curvature of 23 cm. Onto this prepared surface, a vapor deposited layer of high-purity titanium metal was formed in a vacuum of $\sim 4 \times 10^{-7}$ torr while the substrate was rotated and heated to 350°C. Using an electron-beam heating device (10 kW) to evaporate titanium crystal bar stock, rapid deposition was achieved so as to preserve a maximum number of "unpoisoned" adsorption sites.

Apparently because of the small quantity of interstitial tritium contained within the titanium lattice and because of the capability of achieving nearly theoretical tritium sorption, target "half-life" (that time required before the generated neutron yield decreased to one-half its original value under deuteron bombardment) was measured to be $\sim$2700 mA-hr at about 9-mA incident beam current. This is the longest target half-life measured for any such target used at LLL.

Because of the success of the 9-in.-diam tritium-containing targets, LLL personnel are now designing a 20-in.-diam target which is anticipated to yield $>10^{14}$ $^0n_1$/sec as compared with 3×10^{12} $^0n_1$/sec from the 9-in.-diam targets. ORNL Isotopes Division personnel will fabricate the first of these targets late in fiscal year 1974.

NASA Skylab Brazing Experiment

Two radioisotope tracer (^{110m}Ag) brazing samples from the first manned Skylab experiments have been returned to the ORNL Isotopes Division for analysis. The configuration of the braze samples is illustrated in Fig. 1. Pure nickel was used to fabricate both the ferrule and the pipe which were to be brazed in a vacuum of $\sim 10^{-5}$ torr in the space laboratory. Brazing temperature was achieved by a thermite-type, electrically ignited heat source surrounding the metal assembly. The braze alloy was contained as a split ring in the machined grooves of the ferrule (Fig. 1) preceding firing.

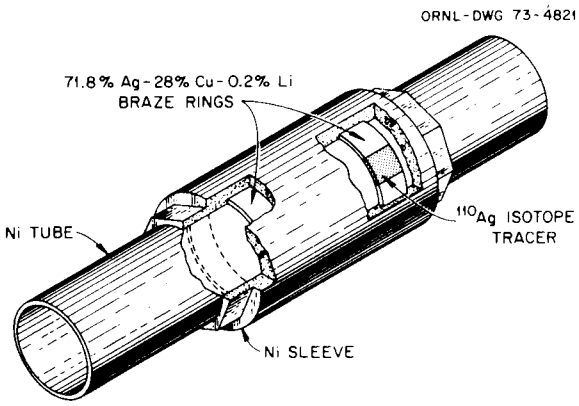

Fig. 1. NASA M-552 Braze Assembly.

Two samples of different spacing configurations were used in the Skylab experiment. The first sample (SLN-2) had a uniform annular spacing of 0.25 mm between the pipe and the ferrule; the second sample (SLN-4) was machined to have a tapered spacing varying from 0.00 to 0.75 mm from one end to the other between the pipe and the ferrule. Experiments with similar samples on earth showed that the braze alloy flowed into the 0.25-mm spacing and left no braze alloy in the original groove. The taper sample after brazing clearly showed a "water level" effect, i.e., the braze material sought its own level in the starved joint.

Although similar in many ways, the braze joints formed in space at near zero gravity (10^{-4} G) proved conclusively that helium leak tight joints could be formed and that starved joints were easily sealed. Figures 2 and 3 illustrate the location of braze alloy in both the 0.25-mm gap (SLN-2) and the 0.00- to 0.75-mm taper gap (SLN-4), respectively, after sectioning and plotting equi-intensity maps of the ^{110m}Ag contained in the brazes. Analysis and comparison of similar topographs obtained from ground-fired samples are now in progress, but it would seem that the following conclusions can be asserted.

1. Radioisotope tracer techniques are practical and efficient for space experimentation.

2. Fabrication or assembly of components in space by brazing is a valid and effective technique.

3. Helium leak tight joints can be formed in space, even under braze-starved conditions.

4. In excessive gaps, braze alloy can be found in both the wide and narrow areas of the joint — the braze alloy flow patterns are

not controlled by density differences, but by capillary and surface tension forces.

5. Although intermetallic compound formations have been observed on surfaces not in final contact with solidified braze material, these are solely Ni-Cu combinations and contain no silver. A silver-rich phase has been observed as isolated islands. (Combined results of Battelle Memorial Institute metallographic examination and ORNL radiotracer measurements.) This result is true for both earth- and space-fused samples.

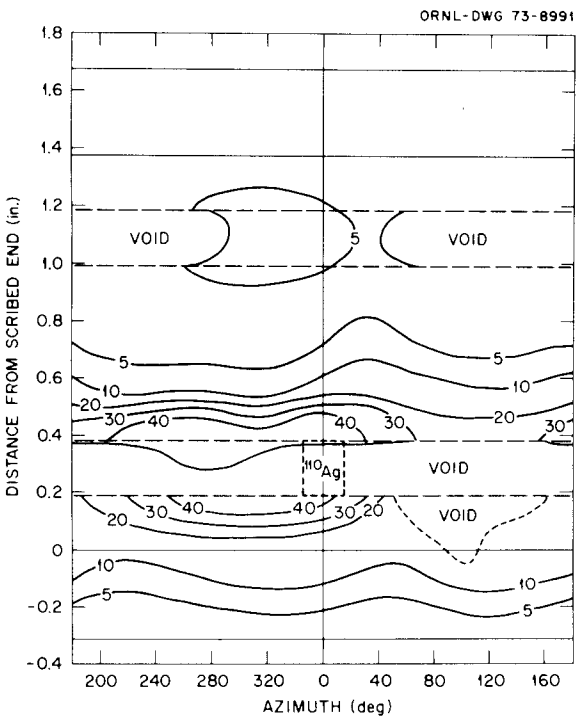

Fig. 2. Isotope Map of SLN-2.

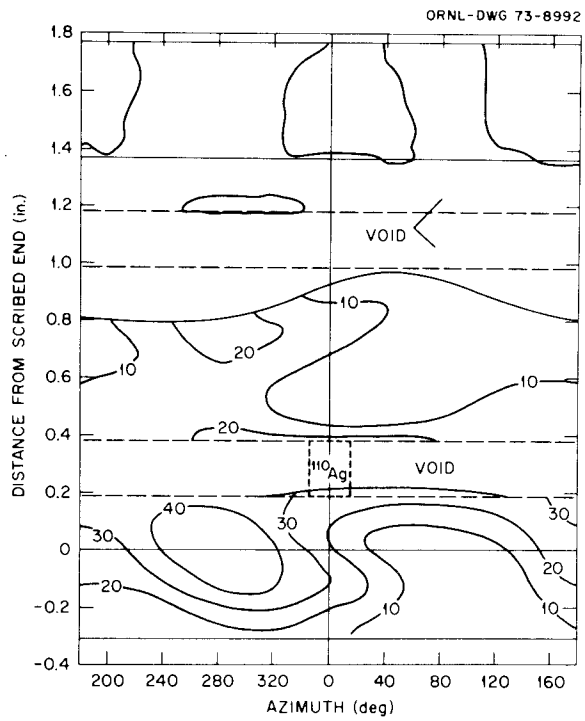

Fig. 3. Isotope Map of SLN-4.

Lithium Metal Neutron Dosimeters

Lithium-6 metal (99%) was extruded into 0.5-mm-diam wire at a die temperature of ∿90°C and under an argon atmosphere. Only very low extrusion pressures were required, e.g., ∿150 psi at 90°C, to cause the metal to flow rapidly through the die. This material was subsequently cut into 6.5-mm lengths and sealed in high-purity vanadium capsules. Subsequent use of these dosimeter capsules for mapping flux regions of CFRMF and EBR-II has been made. In practice the helium content of the capsule after irradiation is measured by mass spectrometry (Atomics International) and thus the dose can be calculated. In fabricating the dosimeters, it was possible to identify the contained quantity of ^{6}Li to ±5%.

ISOTOPIC SEPARATIONS

Isotopic separations of Ir, Os, Rb, and Zr continued through the 3-month interval in a total of 18 electromagnetic isotope separators. Iridium isotopes are being separated and collected in two beta-type separators; osmium in two alpha-type (48-in. radius) separators; rubidium in a segment of eight beta-type separators; and zirconium in six separators modified with 255° equipment. Iridium and osmium separations are being conducted on an 8-hr, 5-day-week basis, while rubidium and zirconium separations are being made on a 24-hr, 5-day-week basis. Based on current estimated weights, as derived from monitored and calculated ion beams along with determined retention values, the current requested quantities of iridium and rubidium isotopes will have been met by the end of the quarter, and these separations will be terminated. Tentatively, palladium and cadmium isotope separations are scheduled to follow.

Two different compounds of cadmium — cadmium fluoride and cadmium sulfide — are being tested under actual calutron operating conditions to compare output, focal properties and, ultimately, mass assays with the currently preferred charge system (cadmium oxide plus externally fed carbon tetrachloride).

Development activities in the stable isotopes program this quarter were concerned with (1) continuing to develop techniques for separating and recovering silicon isotopes with isotopic purities of 99.99+% ^{28}Si, 99% ^{29}Si, and 99% ^{30}Si in a single pass; (2) ion source modifications to improve the purity of tellurium isotopes; (3) varying electrode structures as a means of improving isotopic separations in such areas as increasing ion output, controlling sparking flurries, and improving isotopic purity; and (4) continuing the development of the ORSIS computer control system as it relates to extending the system to a calutron operation.

Source Development

Efforts to improve on the separation of silicon isotopes culminated in 99% purity for ^{30}Si and ^{29}Si, and >99.95% for ^{28}Si (the best purity of previously inventoried samples had been 95.55%, 95.28%, and 99.99%, respectively). Metered currents were equivalent to 390 mg of ^{30}Si, 590 mg of ^{29}Si, and 11.58 g of ^{28}Si. The isotopes were collected on purified graphite.

The improvement in purity resulted from a series of changes in the ion source to provide better beam resolution. The arc container was made much more shallow than normal, the electron-collimating slit was lengthened and moved forward to place the arc in apposition with the exit slit, and electrode structures were reduced markedly in size (eventually to 3/32-in. diameter) to achieve improvement in gas removal from the slit-electrode region. Initial runs were at a relatively low ion output (16-20 mA) in order to achieve the beam resolution needed to yield 99%

^{29}Si or ^{30}Si. By the end of the improvement effort, the output was increased to 35 mA, and with better levels of isotopic purity.

As a follow-up to the use of small-diameter electrodes with silicon, the ion source was modified to accommodate metallic tellurium charge. Here, the effort was directed to improving the purity of ^{122}Te (the best previous sample contained 95.44% ^{122}Te). The ion output was low (∿10 mA) and arc-chamber geometry changes are contemplated as a corrective measure.

The electrodes used in silicon and tellurium work were installed on units separating rubidium isotopes where sparking approaches intolerable levels with conventional systems. The accelerating voltage "kicks-off" some 30 to 40 times per hour of separation, and recorded times show that the voltage may be off for about 5% of the time. With the new electrodes installed, the sparking was materially reduced: kick-off occurred only 5 times per hour and downtime from sparking was only 1.5%. In addition to this increase in operational stability, the average ion output increased from 10 mA to 29 mA.

Receivers for rubidium ions were not changed coincidentally with installation of the electrodes, so direct comparison of isotopic purities is lacking. However, peak-to-valley ratios were better when the rod-type electrodes were in use, and this change in ratio is considered a fair indication of improvement in purity.

RADIOISOTOPIC SEPARATIONS

Plutonium-241 Separation

A plutonium isotope separation, with the objective of collecting >40 g of >90% ^{241}Pu, was started near the beginning of the quarter in the two plutonium separators. Although this is a new series, it is actually a continuation of a previous separation that had the original goal of 75-100 g of >90% ^{241}Pu. Approximately 35 g of >93% ^{241}Pu was recovered from the earlier separation effort.

The current separation is being made through the use of recovered feed batches with the following approximate isotopic composition: ^{238}Pu, 0.92%; ^{239}Pu, 23.80%; ^{240}Pu, 44.67%; ^{241}Pu, 13.39%; ^{242}Pu, 17.19%; and ^{244}Pu, 0.018%.

At the end of the quarter, ∿14.5 g of ^{241}Pu had been monitored into 13 collector pockets with an accumulation of 1293 innage hours. Of the ten preliminary mass assays completed, all were >90% ^{241}Pu.

Plutonium-244 Product Recovery

Recovery and purification of the ^{244}Pu enriched products, mentioned in an earlier report,[1] have essentially been completed:

Sample Number	^{244}Pu Products: Recovered Weight Plutonium (g)	Mass Assay (% ^{244}Pu)
297B[a]	3.278	98.58
297C	0.11[b]	87.36

[a]It should be noted that the "297A" and the "297B" samples shown in an earlier report were in fact blended with a third sample to become the 297B, as shown above. Almost all of this particular sample is currently on loan to Argonne National Laboratory for heat-capacity measurements. Groups in ORNL's Metals and Ceramics and Isotopes Divisions were responsible for high-firing the oxide and the special encapsulation that followed.

[b]Based on impure oxide.

Beryllium-10 Charge Recovery

Following the completion of a ^{10}Be isotopic enrichment program in four singly contained calutrons, the unresolved beryllium charge material was recovered from calutron parts for possible re-use. The stainless steel liners, carbon electrodes, and various calutron parts were washed with a solution consisting of 4 *M* HNO_3 containing a trace of hafnium to remove any beryllium-bearing material. The solution was filtered and evaporated and then the beryllium was concentrated and purified by precipitation as $Be(OH)_2$ in the presence of EDTA, similar to the procedure used for product purification. The resulting $Be(OH)_2$ was collected and ignited at low temperature (500°C) to BeO. According to a recent atomic absorption analysis, the resulting solids contain ∿80.4 g of beryllium, and spectrographic analysis shows them to be free of metallic impurities.

[1] J. H. Gillette, *Isotope Program (5000) Progress Report for Quarter Ending June 30, 1973*, ORNL-TM-4338, Oak Ridge National Laboratory.

Promethium-147

Radioactivity measurements made on the 1.325-g sample of $^{147}Pm_2O_3$, recovered from a graphite pocket following a recent calutron separation,[2] showed that the ^{146}Pm level had been reduced from 0.433 ppm (by activity) to 0.005 ppm (activity) in the product. This reduction represents a separation factor of 86.6 and verifies an earlier prediction (based on calutron contamination data) that the ^{146}Pm should be reduced by 50 to 100 times in one pass through the calutron.

A spark-source mass spectrometric analysis made on the product sample showed that it contained <1,000 ppm of total metal impurities, while the largest single impurity noted was 2,000 ppm of chlorine.

The entire sample, exclusive of analytical samples, was transferred to a stainless steel container and sent to McDonnell-Douglas for further testing.

180° OAK RIDGE SECTOR SEPARATOR DEVELOPMENT

Continued usage of the ORSIS computer control system during target preparations has uncovered no additional problems associated with separator-generated electrical noise and has verified that the solution to this problem reported last quarter is adequate. The separator has been run several hundred hours with no adverse effect on the computer control system. The choice of proper separator control action based on the measurement of noisy and rapidly varying signals represents one of the more formidable programming problems.

All capital equipment concerned with the $48,000 ORSIS computer system update is now on order with delivery on all items to be complete by March 1974. Engineering and computer software development will be ready for testing when the equipment has been installed. Applications programming to actually operate the ORSIS and research and development calutron with this new software system will take 4-6 more months to be ready for testing.

Additional separator-control equipment is now being installed on the ORSIS to utilize the existing computer system to the fullest extent possible as an interim step until the new computer equipment is installed. This step should demonstrate the feasibility of computer control of both the calutron and ORSIS by providing limited ion-beam

---

[2] *Ibid.*

tuning as well as quality-control checks and data readout. Much of the computer programming will have to be redone when the new computer system is operational, but the testing of hardware and control logic will provide a valuable base of information for use of the new system. This interim computer-control system should be on stream in about two months and will be used during target preparations and isotope separations until the new system is ready.

The following isotopes have been directly deposited onto thin carbon foils by use of an ion-beam deceleration receiver: 25 μg/cm of ^{160}Gd onto 50 μg/cm carbon, and 25 μg/cm of ^{168}Yb and ^{176}Hf onto 125 μg/cm carbon. The 50% breakage previously encountered during target preparation using the 25 μg/cm foils has been reduced to zero through use of the 125 μg/cm foils. An effort will be made to eliminate the breakage of the 25-μg/cm foils, since they are required for some uses.

Two new decel target and collection receivers are under construction. It appears that the use of the low-energy beam collection techniques with this type of receiver can produce isotopic enrichment factors in excess of 10^5 for both targets and collections for many low abundant isotopes where calutron enrichments would be many times lower (around 100).

CHEMICAL PROCESSING

Material in Process

Elements in chemical processing during the quarter ending September 30, 1973, are Hf, Ir, Hg, Os, Pt, Rb, Zn, and Zr.

Material Added to Inventory

Isotopic material released or made available to the Sales Department during the third quarter of calendar year 1973 is shown in Table 1, along with the appropriate separation data.

In addition to the 12 new lots of isotopes released to inventory, nine loan-return samples were processed and returned to inventory.

Table 1. Operations Status — July-September 1973

Element and Isotope	Series	Run Start	Run Finish	Innage Hours	Tank Hours	Charge Material	Estimated Recovery (g)	Estimated Purity (%)	Actual Recovery (g)	Actual Purity (%)	Requirements
^{196}Hg	PG	3-13-72	6-1-73	26,816	32,736	Hg	1.0	∿20	0.182[a]	33.97	50 g
^{200}Hg	PG	3-13-72	∿6-1-72	8,567	10,608[b]	Hg	7	>90	5.579[a] 4.162[a] 0.436[a]	95.74 93.33 88.07	50 g
^{201}Hg	PG	∿6-1-72	6-1-73	18,249	22,128[b]	Hg	17	>80	4.154 15.984[a]	92.02 83.19	50 g
^{180}Hf	PD	4-5-71	3-30-72	10,696	15,000	$HfO_2 + CCl_4$			107.572[c]	93.86	100 g
^{190}Pt	PI	4-3-72	5-16-73	3,000	4,400	$Pt + ClF_3$	0.18		0.212	4.19	50 g
^{192}Pt	PI	4-3-72	5-16-73	3,000	4,400	$Pt + ClF_3$	1.28		1.839	57.30	50 g
^{196}Pt	PI	4-3-72	5-16-73	3,000	4,400	$Pt + ClF_3$	35.0		40.893	97.51	50 g
^{198}Pt	PI	4-3-72	5-16-73	3,000	4,400	$Pt + ClF_3$	10.5		13.519	95.83	50 g
^{67}Zn	PL	1-2-73	4-27-73	13,309	15,744	Zn	45	>85	51.690[d]	89.68	15 g 50-95% 30 g >95%

[a]Material actually recovered from Series PG; inventory lots included material from previous separations.
[b]Split collection.
[c]Inventory sample consisted of crystal-bar metal and oxide.
[d]Material actually recovered from Series PL; inventory lot included material from previous separation.

ISOTOPES PREPARATIONS AND SALES

The stable isotope and radioisotope target and research material preparations for the quarter ending September 30, 1973, are given in Tables 2 and 3, respectively.

Table 2. Stable Isotope Preparations

Isotope	Number of Preparations	Isotope	Number of Preparations
Aluminum, normal	1	Manganese, normal	1
Beryllium, normal	2	Molybdenum-92	1
		Molybdenum-94	1
Calcium-40	2	Molybdenum-95	1
Calcium-42	1	Molybdenum-96	2
Calcium-43	1	Molybdenum-97	1
Calcium-44	6	Molybdenum-98	3
Calcium-48	2		
		Nickel-60	5
Carbon, normal	1		
		Platinum, normal	20
Cesium, normal	6	Platinum-195	1
		Platinum-196	2
Chromium-50	1		
Chromium-53	1	Praseodymium, normal	3
Cobalt-59	1	Silicon, normal	1
Copper-63	1	Tin-122	1
Gadolinium-156	1	Titanium-47	1
Gadolinium-162	1		
		Vanadium, normal	1
Germanium-70	1		
		Ytterbium-172	1
Iron-54	2	Ytterbium-173	1
Iron-56	1		
Iron-57	1	Yttrium, normal	3
Iron-58	1		
		Zinc-64	1
Lead-208	2		
		Zirconium-92	1
Magnesium-24	2	Zirconium-94	1
Magnesium-26	1	Zirconium-96	1

Table 3. Radioisotope Preparations

Isotope	Number of Preparations	Isotope	Number of Preparations
Americium-241	1	Thorium-232	2
Americium-243	2		
		Tritium-Erbium	3
Neptunium-237	4	Tritium-Titanium	1
Plutonium-239	6	Uranium-233	4
Plutonium-242	1	Uranium-235	9
Plutonium-244	1	Uranium-236	1
		Uranium-238	11

The isotope sales and services for the quarter ending September 30, 1973, are given in Table 4.

Table 4. Isotopes Sales and Services
July 1, 1973, Through September 30, 1973

	Shipments	Revenue
EM Isotopes Sales	684	$ 321,412
Non-EM Isotopes Sales	121	69,564
Services		
Stable Isotope Target Preparations		25,045
Radioisotope Target Preparations		1,600
Special Services		22,125
Reprocessing Returned Loans		9,507
Work for Others		45,253
Total Services		103,530
TOTAL	805	$ 494,506

ADMINISTRATIVE

Visitors to the IDC are shown in Table 5.

Table 5. IDC Visitors

Visitor	Affiliation	Subject Discussed
J. O. Denschlag	University of Mainz Mainz, West Germany	EM isotope separator program
K. Guttner	Physikalische Institut, Justus Liebig University Giessen, Arndstrasse 2 West Germany	Use of calutron as ion particle accelerators
H. Flotow	Argonne National Lab.	Sample preparation

INTERNAL DISTRIBUTION

1. M. A. Baker
2. P. S. Baker
3. E. E. Beauchamp
4. W. A. Bell
5. D. S. Billington
6. G. E. Boyd
7. F. N. Case
8. J. W. Cleland
9. T. F. Connolly
10. F. L. Culler
11. W. C. Davis
12. J. S. Drury

13-19. J. H. Gillette

20. W. M. Good
21. H. R. Gwinn
22. J. A. Harvey
23. C. E. Haynes
24. R. F. Hibbs
25. J. E. Keeton
26. O. L. Keller
27. E. H. Kobisk
28. E. Lamb
29. R. E. Leuze
30. L. O. Love
31. W. S. Lyon
32. F. C. Maienschein
33. H. H. Nichol
34. F. Perey
35. J. J. Pinajian
36. W. K. Prater
37. M. E. Ramsey
38. S. A. Reynolds
39. R. W. Schaich
40. M. R. Skidmore
41. M. J. Skinner
42. P. H. Stelson
43. H. F. Stringfield
44. A. M. Weinberg
45. J. R. Weir
46. J. C. White
47. A. Zucker

48-49. Central Research Library

50. Document Reference Section

51-56. Laboratory Records Department

57. Laboratory Records - RC

INTERNAL DISTRUBITION

58. N. F. Barr, Office of General Manager, AEC
59. R. C. Block, Rensselaer Polytechnic Institute
60. R. M. Brugger, Aerojet Nuclear Corporation
61. K. E. Chellis, Florida State University
62. R. E. Chrien, Brookhaven National Laboratory
63. J. T. Christy, AEC-RLOO
64. G. Cowan, Los Alamos Scientific Laboratory
65. B. J. Dropesky, Los Alamos Scientific Laboratory
66. L. Friedman, Brookhaven National Laboratory
67. K. A. Gschneidner, Jr., Iowa State University
68. M. E. Harris, Lawrence Livermore Laboratory
69. I. A. Hobbs, Savannah River Operations, AEC
70. R. W. Hoff, Lawrence Livermore Laboratory
71. H. E. Jackson, Argonne National Laboratory
72. J. S. Kirby-Smith, Division of Biomedical & Environmental Research, AEC
73. J. H. Lawrence, Lawrence Berkeley Laboratory

74. J. L. Lerner, Argonne National Laboratory
75. J. N. Maddox, Division of Biomedical & Environmental Research, AEC
76. W. B. Mann, National Bureau of Standards
77. J. W. Meadows, Lawrence Livermore Laboratory
78. M. C. Michel, Lawrence Berkeley Laboratory
79. R. A. Neumann, Princeton University
80. H. W. Newson, Duke University
81. A. O. C. Nier, University of Minnesota
82. H. A. O'Brien, Los Alamos Scientific Laboratory
83. D. M. Richman, Division of Physical Research, AEC
84. G. L. Rogosa, Division of Physical Research, AEC
85. B. C. Rusche, Savannah River Laboratory
86. W. D. Sandberg, Savannah River Operations, AEC
87. L. G. Stang, Brookhaven National Laboratory
88. W. L. Talbert, Jr., Iowa State University
89. G. Taplin, University of California, Los Angeles
90. J. M. Teem, Division of Physical Research, AEC
91-95. D. H. Turno, Savannah River Laboratory
96. A. R. Van Dyken, Division of Physical Research, AEC
97. M. Williams, Lawrence Livermore Laboratory
98. Research and Technical Support Division, ORO
99-100. Technical Information Center