DATE ISSUED DEC 6 - 1973

ORNL MASTER COPY

OAK RIDGE NATIONAL LABORATORY
OPERATED BY
UNION CARBIDE CORPORATION
NUCLEAR DIVISION

POST OFFICE BOX X
OAK RIDGE, TENNESSEE 37830

ORNL
CENTRAL FILES NUMBER
73-9-4

DATE: September 5, 1973

SUBJECT: Building 4507, High Level Chemical Development Facility—Operating Manual and Hazards Evaluation

TO: Distribution

FROM: J. H. Goode, CTD

ABSTRACT

The facilities and operations of Building 4507 (High-Level Chemical Development Facility) were reviewed from the standpoint of associated hazards (radiation, criticality, chemical, fire, and explosion) and were found to be satisfactory.

This document also contains information intended to aid individuals with current or future work assignments at Building 4507 and is expected to promote safe, efficient operations. Strict adherence to procedures and regulations should prevent excessive exposure of personnel to radiation and contamination. Included in the manual are descriptions of the building and attendant service features such as liquid and gaseous waste systems and the building airflow system.

NOTICE This document contains information of a preliminary nature and was prepared primarily for internal use at the Oak Ridge National Laboratory. It is subject to revision or correction and therefore does not represent a final report. The information is only for official use and no release to the public shall be made without the approval of the Law Department of Union Carbide Corporation, Nuclear Division.

ORNL
MASTER COPY

DATE ISSUED
DEC 6 - 1973

OAK RIDGE NATIONAL LABORATORY
operated by
UNION CARBIDE CORPORATION
NUCLEAR DIVISION

POST OFFICE BOX X
OAK RIDGE, TENNESSEE 37830

For Internal Use Only

ORNL
CENTRAL FILES NUMBER
73-9-4

DATE: September 5, 1973

SUBJECT: Building 4507, High Level Chemical Development Facility-Operating Manual and Hazards Evaluation

TO: Distribution

FROM: J. H. Goode

ABSTRACT

The facilities and operations of Building 4507 (High-Level Chemical Development Facility) were reviewed from the standpoint of associated hazards (radiation, criticality, chemical, fire, and explosion) and were found to be satisfactory.

This document also contains information intended to aid individuals with current or future work assignments at Building 4507 and is expected to promote safe, efficient operations. Strict adherence to procedures and regulations should prevent excessive exposure of personnel to radiation and contamination. Included in the manual are descriptions of the building and attendant service features such as liquid and gaseous waste systems and the building airflow system.

NOTICE This document contains information of a preliminary nature and was prepared primarily for internal use at the Oak Ridge National Laboratory. It is subject to revision or correction and therefore does not represent a final report. The information is only for official use and no release to the public shall be made without the approval of the Law Department of Union Carbide Corporation, Nuclear Division.

CONTENTS

1.0 INTRODUCTION 1
1.1 Purpose and Uses 1
1.2 Location and Distance from Other Facilities 1
1.3 Emergency Evacuation Routes 3
1.4 Building Description 3
1.4.1 General 3
1.4.2 Ventilation System 4
1.4.3 Fire Protection System 4
1.4.4 Radiation and Contamination Warning System . . . 10
1.4.5 Work Areas of Building 4507 11
1.4.6 Process and Auxiliary Equipment 13

2.0 CONTAINMENT OF BUILDING 4507 15
2.1 Cell Containment 15
2.1.1 General 15
2.1.2 Alpha Hazard Containment 16
2.1.3 Cell Support Equipment 17
2.2 Building Containment 20
2.2.1 Ventilation 20
2.2.2 General 21
2.2.3 Administrative Control 25

3.0 CHEMICAL PROCESSES 26

4.0 CRITICALITY 27

5.0 OPERATING SAFEGUARDS 29
5.1 Hazards Evaluations 29
5.2 Planning Experiments 30
5.3 Special Regulations Applying to the Penthouse 31

6.0 PERSONNEL EXPOSURE 34
6.1 Zoning 34
6.2 Smoking and Eating 37
6.3 Radioactive Sources 37

7.0 RADIATION AND CONTAMINATION CONTROL 38
7.1 Radiation Monitors 38
7.2 Containment System 41
7.2.1 Description 41
7.2.2 Instruments and Alarms 43
7.2.3 Central Panel Board 48
7.3 Neutron Threshold Detector Units 49
7.4 Removal of Building from Containment 50

CONTENTS (continued)

8.0 LIQUID WASTE SYSTEMS 50
8.1 Process Water Waste 50
8.2 Radioactive Waste System 52
8.3 Diversion Valve Pit for Radioactive Waste System . . . 53
8.4 Bldg. 4556 Radioactive Waste Drain 54

9.0 GASEOUS WASTES 54
9.1 Vessel Off-Gas System 54
9.2 Building Vacuum System 55

10.0 CELL VENTILATION SYSTEM 55
10.1 Bldg. 4556 Filter Pit 55
10.2 Cell Operation 60

11.0 SOLID WASTES 61
11.1 High-Level Solid Waste 61
11.2 Low-Level Solid Waste 61
11.3 Large-Scale Decontamination Operations 62

12.0 PROCESS HAZARDS 63
12.1 Gas Formation Leading to Pressure Conditions or Explosion Hazard 63
12.1.1 Hydrogen Formation in Sulfex Process 63
12.1.2 Hydrogen Formation During Dissolution of TRU Aluminum Targets 64
12.1.3 Solvent Vapors 64
12.1.4 Sodium or NaK Handling 65
12.2 Fires 66
12.3 Explosions 68
12.4 Loss of Containment Through Ventilation Failure . . . 69
12.5 Other Credible Accidents 69
12.5.1 Spills 69
12.5.2 Personnel Errors 70
12.6 Maximum Credible Accident 71

APPENDIX A: EMERGENCY PROCEDURES FOR BUILDING 4507 79
A-1: 4507 Emergency Evacuation Plan - Fire, Explosion, or Activity Release 80
A-2: Other Emergencies 81
A-3: General Emergency Procedures 82

APPENDIX B: ROUTINE OPERATING PROCEDURES 99
B-1: To Manually Place Building into Containment . . 100
B-2: To Remove Building from Manual Containment . . 100
B-3: To Work on 4507 Emergency Power System or Containment System 100
B-4: To Reset Evacuation Alarm Horns 100
B-5: Procedure for Jetting Tank 30 Pit Sump 101
B-6: Procedure for Jetting Cell 1 Pit Sump 105

B-7: Procedure for Jetting Cell 2 Floor Sump 106
B-8: Procedure for Jetting Cells 3 or 4 Sumps or Scuppers 106
B-9: Solution Transfer from T-30 to Cell 4 Storage . 107
B-10: Routine Building 4507 Checks 107
B-11: Transfer of Materials at Building 4507 114
B-12: 4507 Checklist for Scheduled Power Outage . . . 114

APPENDIX C: EXAMPLE OF TYPICAL RUNSHEET 117
C-1: Procedures and Samples for Short-Decay Experiments on LMFBR Fuels in Bldg. 4507 118

APPENDIX D: SODIUM AND NaK HANDLING PROCEDURES 121

APPENDIX E: FISSION PRODUCT CONTENT OF FUELS IN BLDG. 4507 CELLS. 127
E-1: Elemental Activity 128
E-2: Irradiation of HTGR Fuel Specimens 129
E-3: Elemental Activity (curies) in Uranium Portion of HTGR Fuel 131

APPENDIX F: BUILDING 4507 VACUUM SYSTEM 133
F-1: General 134
F-2: Operation of Vacuum System Startup 134
F-3: Operation of Vacuum System Shutdown 134
F-4: Details 134

APPENDIX G: OPERATION OF BUILDING 4556 CELL VENTILATION AND FILTRATION FACILITY 139

BUILDING 4507, HIGH-LEVEL CHEMICAL DEVELOPMENT FACILITY

1.0 INTRODUCTION

1.1 Purpose and Uses

Building 4507, the High-Level Chemical Development Facility, is a doubly contained, multi-storied structure erected in 1957, housing 4 hot cells shielded by the equivalent of 4 feet of high density concrete. The cells, each having a usable volume 10 feet long, 6 feet wide, and 11 feet high and served by master-slave manipulators, are used for laboratory or small-scale pilot plant operations with highly irradiated α-β-γ sources. The penthouse superstructure contains alpha-tight glove boxes, a shielded manipulator cave for small scale work, and a gantry crane for handling shielded casks.

The cells in Building 4507 have been used in development studies on fluoride volatility and aqueous processing of LWR fuels, separation of ^{232}U from ^{231}Pa, recovery of ^{241}Am and $^{242-244}Cm$ from plutonium and/or rare earth wastes, preparation of sol-gel microspheres of Am, Cm, and ^{238}Pu, HTGR head-end processing studies, and separation of fission products from aqueous wastes. The building is being used in 1973 for laboratory-scale HTGR and LMFBR head-end processing studies, including tests with short-cooled (30 days) fuel rods.

1.2 Location and Distance from Other Facilities

Figure 1, part of the Oak Ridge National Laboratory Permanent Facilities Plan, shows the location of the High-Level Chemical Development Facility in the plant complex. The distances of the various buildings

ORNL DWG 73-8623

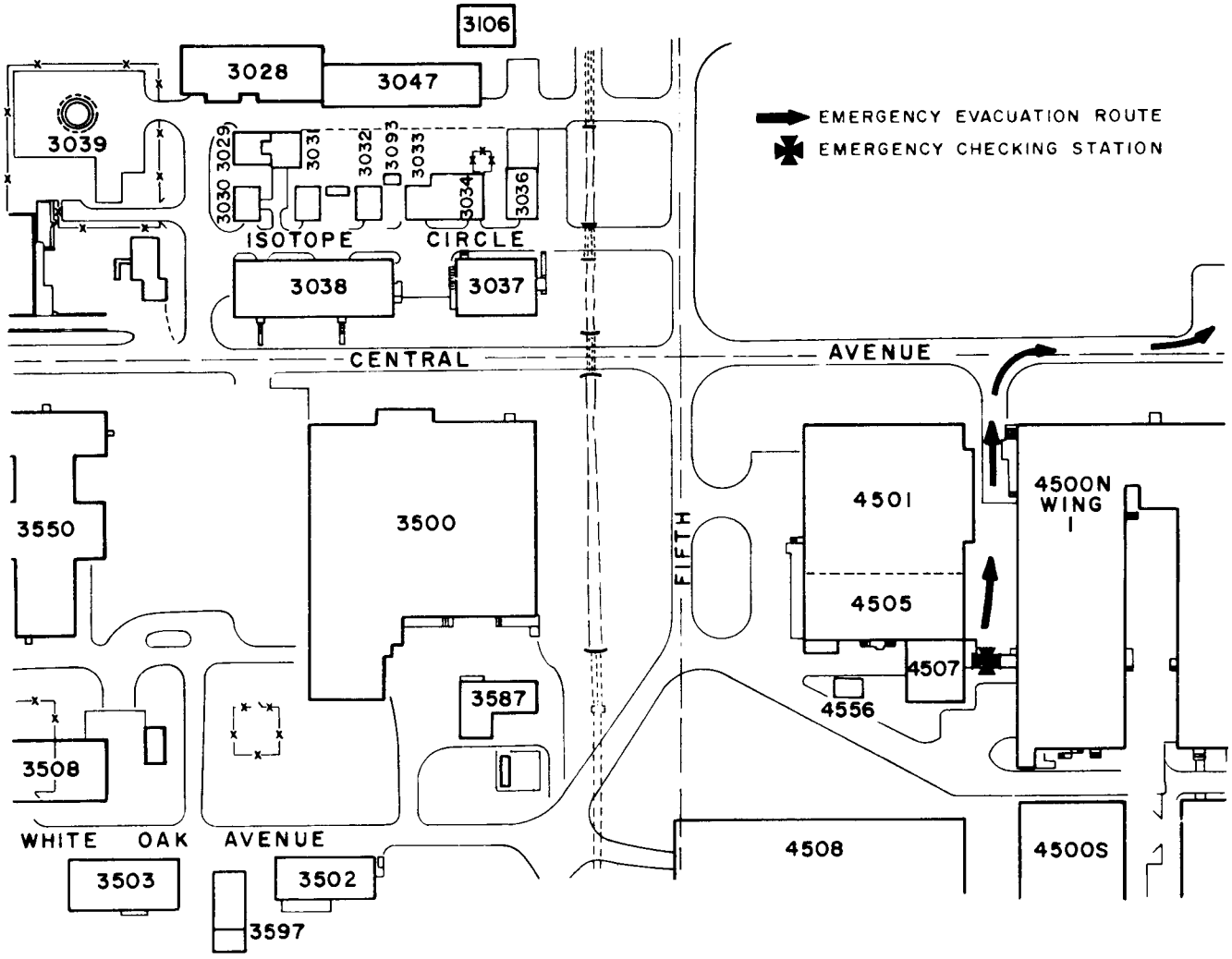

Fig. 1. Location of Bldg. 4507 and Emergency Evacuation Route.

from Building 4507 and the approximate number of occupants are:

Bldg. No.	Name	Distance ft	Distance Direction	Number of People Present: Weekdays	Number of People Present: Nights and Weekends[a]
4507	High-Level Chemical Development Facility	-	-	4-7	1-3
4505	Unit Operations	Abuts	North	65	1-2
4501	High-Level Radiochemical Cells (abuts 4505)	60	North	50	1-2
4508	Metals and Ceramics	100	South	200	1-5
4500	Central Research and Administration (Wing 1)	48	East	100	2-3
3587	Instrument Stores	400	West	4	0

[a]Includes janitors, regular shift personnel, and irregularly assigned technical personnel.

1.3 Emergency Evacuation Routes

In the event of a laboratory-wide emergency, as announced over the public address system and signalled by the wailing evacuation siren, experiments will be immediately shut down, the building put into containment by actuating the Manual Containment button, and personnel proceed via Central Avenue to the East Portal parking lot (Fig. 1), or as otherwise directed.

1.4 Building Description

1.4.1 General

Building 4507 is a 54-ft by 54-ft brick veneered, concrete block building with an insulated sheetmetal superstructure called the penthouse. A 10-ton gantry crane used for handling shielded casks of fuel and

analytical samples is located in the penthouse. Vestibule (air lock) personnel entrances are provided and the building is sealed against air leaks so as to be able to normally maintain at least -0.15 in. of water in the operating areas with respect to the atmosphere. The building and penthouse thus provide a secondary containment envelope for radioactive materials handled within the primary cell block which operates at a lower (-1 in. H_2O) pressure. Table 1 summarizes the floor space and containment volumes in the main areas of the building and in the 4 shielded hot cells. Table 2 is a general description of the cells, their shielding, services, and current uses. Containment features of the building and cells are described in detail below (Section 2.0).

1.4.2 Ventilation System

Ventilation for the building and cells (shown schematically in Figs. 2 and 3) is supplied by fans in the Bldg. 4556 filter house; roughing, HEPA, and optional charcoal filters provide the primary line of filtration prior to discharge of the air to the duct to the main ORNL filters at Bldg. 3106 and the 3039 exhaust stack. Details of the system are described in Section 10.0 and Appendix G.

1.4.3 Fire Protection System

The automatic fire protection and sprinkler systems in Bldg. 4507 are shown on Dwg. Nos. D-39803 through D-39806, D-39853, and D-39854R1. Manual fire alarm boxes are located (Fig. 4) behind the cells on the east wall of the charging area and on the outside west wall of the Operating Area, south of the vestibule door. Each cell has a fixed water spray (fog) nozzle, manually operated from the cell face for fire fighting

Table 1. Floor Space and Volume of Building 4507, High-Level Chemical Development Facility

Area	Length (ft)	Width (ft)	Height (ft)	Volume (ft^3)	Floor Space (ft^2)
Operating Area	51.0	16.9	15.8	13,591	863
Change Room	18.0	8.0	18.5	2,664	144
Charging Room	51.0	18.9	10.0	9,649	965
Makeup Area	51.0	18.9	8.5	8,202	965
Total Interior				34,106	2,937
Penthouse	51.0	21.5	17.75	19,463	1,096
Secondary Containment (Building) Total				53,569	4,033
Cells (each)	10.0	6.0	11.0	660 x 4	
Primary Containment Total				2,640	

Table 2. Description of Cells in Building 4507, High-Level Chemical Development Facility

Cell No.	Cell Liner Floor	Cell Liner Walls	Equiv. Std. Conc. Shielding (ft)	Process	Services Available to Cell
1	SST	Paint	5	HTGR head-end	Proc. water, vacuum, 15 psig air, VOG, 110V, gases, reagent ports
Cave	SST	SST	1.6	Same	Same
2	SST	Paint	5	LMFBR head-end	Same
3	SST	Paint	5	Standby	Same
4	SST	Paint	5	Standby	Same
Maint. Box	Paint	Glass & Paint	-	Standby	110V

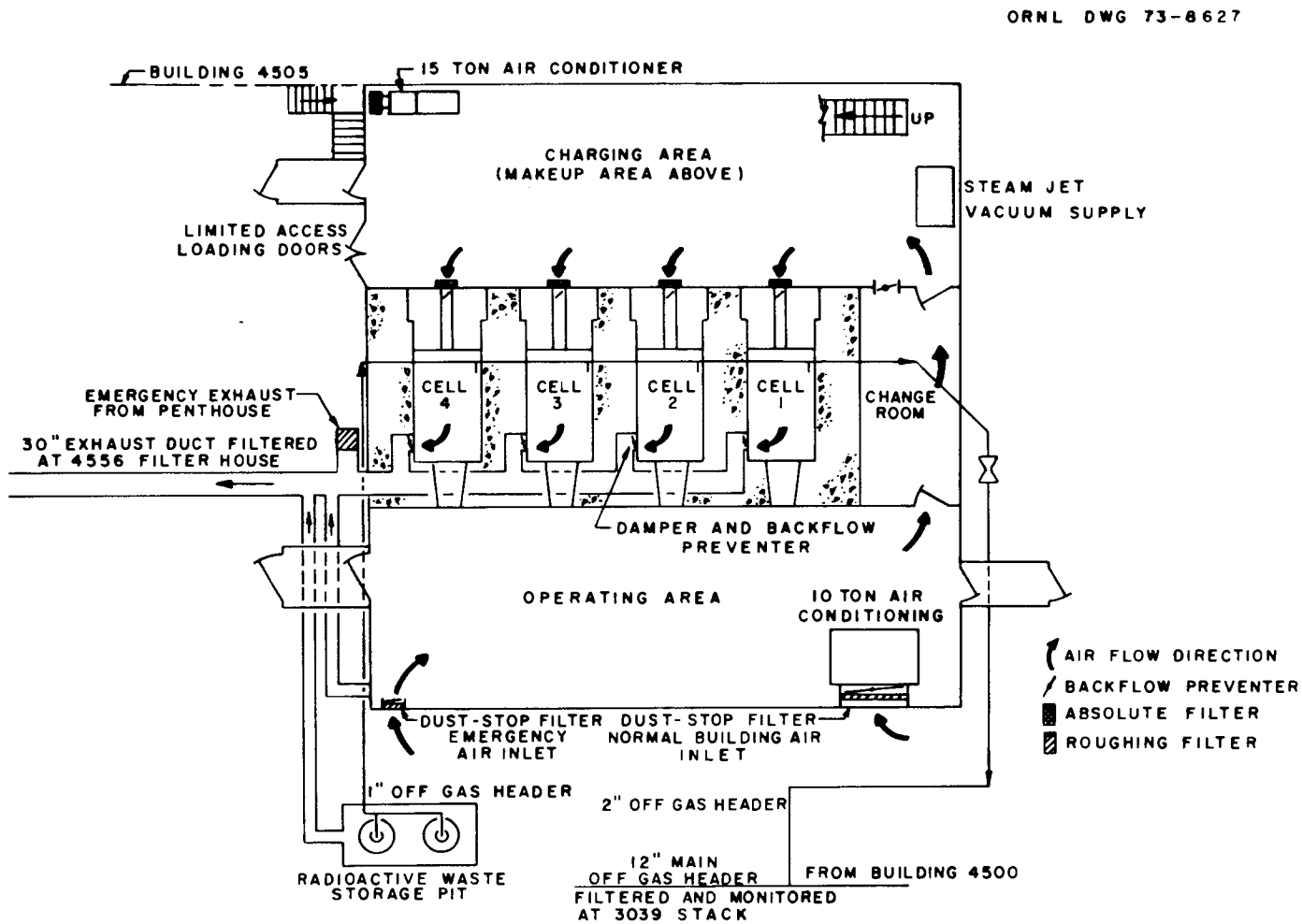

Fig. 2. Schematic Ventilation Plan for Bldg. 4507.

ORNL DWG 73-8622

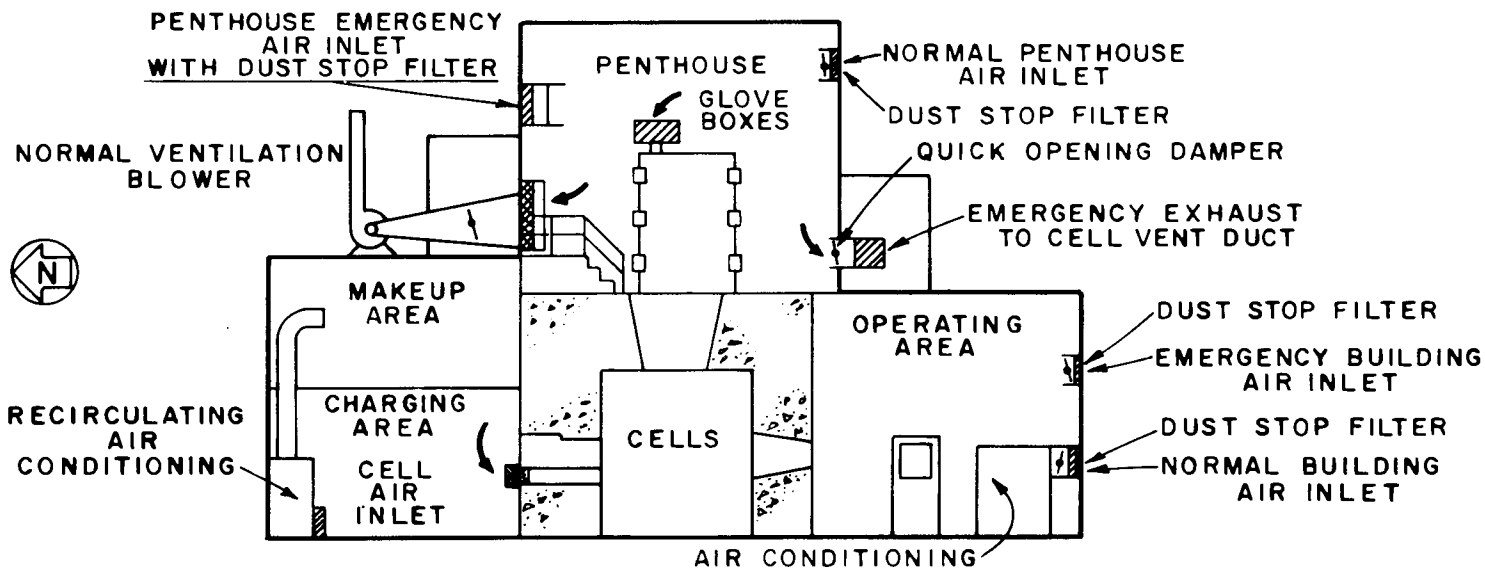

Fig. 3. Schematic Elevation of Bldg. 4507 Ventilation System.

ORNL DWG 73-8631

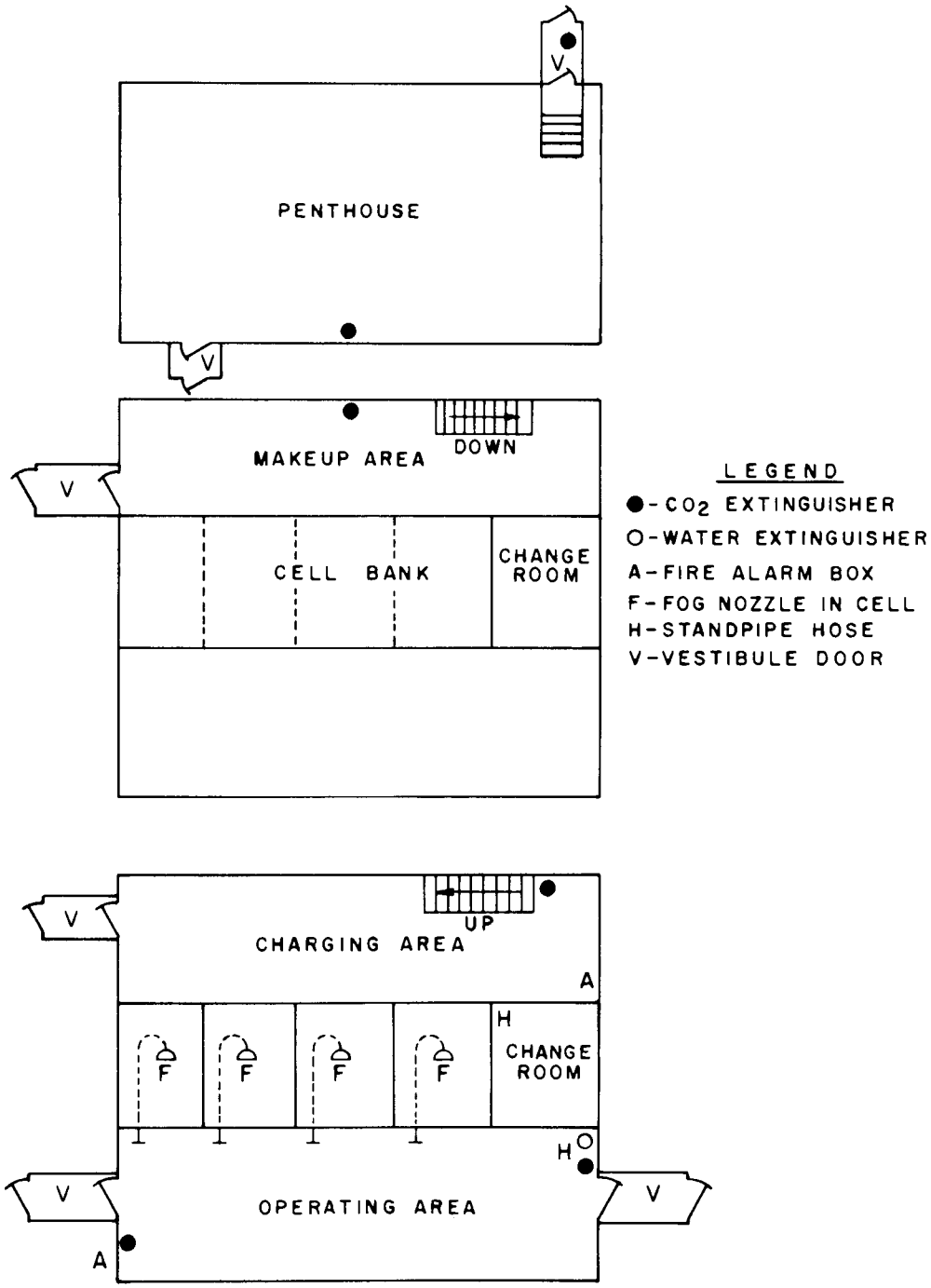

Fig. 4. Bldg. 4507 Fire Protection System.

purposes; manual operation is necessary to prevent build-up of excessive water in the cells. Heat detecting (165°F) sensors in each of the cells and throughout the building signal an alarm via the Gamewell Alarm system to the ORNL central panel. The Gamewell fire detection and alarm system is shown on D-26330.

Portable fire-fighting equipment is provided in 4507: one fire hose in the operating area and one in the Change Room; three portable fire extinguishers in the operations area, two in the charging area, one in the makeup area, and two in the penthouse (Fig. 4).

1.4.4 Radiation and Contamination Warning System

Radiation and contamination systems have been installed to continuously and automatically monitor gamma radiation, neutron radiation, and air contamination in the 4507 facility. These instruments and other components in the network provide health physics monitoring information, sound local alarms when abnormal conditions occur, and indicate the abnormal conditions on a central panelboard.

Operating personnel are first given warning when a "caution level" is detected by a monitron or beta-gamma air monitor, respectively. A second warning is given when a "high level" is detected. The neutron detectors operate "rate" or "burst" alarms when the alarm levels are exceeded.

The building is automatically "contained" when two or more monitrons, two or more beta-gamma air monitors, or any alpha air monitor detects a high level of radiation or air contamination. The building evacuation system operates automatically when two or more monitrons, or two or more

beta-gamma air monitors, or any alpha air monitor detect a "high level" of radiation or air contamination, or when two or more neutron monitors detect a neutron burst or a "high-rate" level. Details of the system are in Section 7.0.

1.4.5 Work Areas of Building 4507

Operating Area. - The ground-level operating area is a large gallery along the south face of the cell block. It contains the lead glass viewing windows, manipulator controls, instrument and control racks, desks, and the Applied Health Physics station for Bldg. 4507. The main personnel entrance, provided with a β-γ hand and foot counter and α-survey meter, is located there. All other entrances and exits from the building are emergency exits under administrative control.

Change Room. - The Change Room contains a lavatory, a urinal, and a shower, metal bins and cabinets for the storage of contamination zone clothing (Laundry Station 42) and shoes, shoe covers, gas masks, air suits, janitor supplies, etc. Laundry bags are provided for dirty clothes. A checking station for β-γ and α radioactive contamination is also located in the Change Room, and must be used by building personnel to prevent the spread of radioactive contamination from the potentially-contaminated rear areas into the front operating area. The Change Room doors must be kept closed at all times; these doors are a part of the ventilation control system.

Charging Area. - The ground-level charging area behind the cells contains tracks for the rolling cell doors, main electrical panels, the 75 kVA transformer for the building, the condenser for the building

vacuum steam jet, an air conditioner, and other service entrances. The area is normally kept free of radioactive contamination and is used as a shop by Plant and Engineering personnel assigned to the building. Metal cabinets and shelves are provided for storage of small items. The unvestibuled double door in the Charging Area is not to be opened without permission of supervision; the vestibuled door is an Emergency Exit under administrative control, and should not be used as a routine personnel exit or entrance.

Chemical Makeup Area. - This second level behind the cell block is used as a passageway to the Penthouse above the cell block. It is normally kept free of radioactive contamination, and may be used as a storage area for equipment and supplies. The area also contains a number of building services, instruments, and process vessels; these are described below.

Penthouse Area. - Irradiated fuel specimens and analytical samples are introduced and withdrawn from the cells and glove boxes in the penthouse area, using shielded casks and the gantry crane. Experimental equipment and solid wastes are also handled here. This area above the cells is normally considered a Contamination Zone because of the possibility of the accidental release of radionuclides. Lab coats or coveralls and shoe covers will be worn in the Penthouse. (The Building Supervisor and Applied Health Physics representative may temporarily declare the area a Regulated Zone when the cells are not operating and if the area is free of contamination.) A β-γ and an α monitoring station are located at the main personnel entrance to the Penthouse. Other instruments are

at work sites in the room. Some process equipment and instrumentation for the cells may also be located here. All personnel will observe regulations posted on the entrance door.

Radioactive Waste Storage Pit. - South of Building 4507 is an underground structure containing 2 tanks. This facility, shielded to handle approximately 250,000 curies of mixed fission products, is treated as if it were a "hot" cell. The pit is constructed of poured, steel-reinforced concrete with walls and base 12 in. thick. The pit is lined with stainless steel and equipped with a sump and steam jet connection to the adjacent 2-in. metal waste header leading to WC-14. Thus, if the 1000-gal storage tank or connection leak, the highly radioactive solution is retained in the pit until it can be jetted to a permanent storage tank. The pit is covered with 6 in. of lead, 3-in. of steel armorplate, and finally a 1/4-in. steel cover plate gasketed and bolted in place. The storage tanks are vented to the Building 4507 VOG system, and the pit is vented to the cell exhaust duct.

ORNL Drawings D-45657, E-45659, D-45660, C-45661, and C-SK-55 show the detailed piping connections and valving arrangements associated with the operation of the radioactive waste storage pit vessels T-25 and T-30. Drawing D-45696 shows details of the dry well and sump pump installed adjacent to the pit to minimize leakage of ground water into the pit. Instruments and alarms are connected to the central panelboard in Bldg. 4507.

1.4.6 Process and Auxiliary Equipment

Process equipment in Cells 1 and 2 of Building 4507 is of laboratory scale (5-50 g of fuel) and is expected to be of a continually changing

nature. In general, it consists of slightly modified laboratory glassware, hot plates, tube furnaces, thermocouples, balances, food blenders, sieve sets, etc. Items of specialized equipment include a laboratory crusher in Cell 1 to reduce the size of graphite HTGR fuel specimens and a small hydraulic shear in Cell 2 for cutting Zircaloy or stainless steel-clad LMFBR or LWR fuel rods. Stainless steel or quartz "burners" are used in the tube furnaces to contain fuel specimens being heated or burned during determination of fission product volatilities; filter packs and scrubbers are used in the cells to remove particulates and reactive materials, and gas holders to collect the non-condensables. These are later discharged to the plant vessel off-gas (VOG) system. Dissolution of the fuel specimens in mineral acids is used to prepare feed solutions for solvent extraction tests and for material balance purposes.

The Curium Recovery Facility process equipment, in standby in Cells 3 and 4, has been fully described in ORNL CF-65-7-69, CF-64-11-20, and CF-63-7-50; it is awaiting future removal and disposal. Much of the auxiliary out-of-cell equipment has already been removed for salvage.

Auxiliary equipment and services include building vacuum, supplied by a local steam jet (App. F), and cylinder gases piped from storage racks on the outside (south) wall of the building. Emergency electric power is supplied from Emergency Panel 5 in Bldg. 4505 (second floor) to operate the Bldg. 4556 cell ventilation fans, the radiation-contamination warning instruments of the containment system, and the emergency lighting. The 4507 Emergency Power Panel is located on the south wall of the Operating Area east of the Central Containment Panel.

2.0 CONTAINMENT OF BUILDING 4507

2.1 Cell Containment

2.1.1 General

Primary containment is provided by the cell block, which is 43 feet long, 18 ft wide, and 16 ft high. Each of the 4 cells has internal dimensions 6 ft wide, 10 ft long, and 11 ft high. In cells 1 and 4 there is a lead floor, beneath which are a pit and storage tanks, thus making the total cell height 15 ft from the bottom of the pits to the ceiling of the cell. (The tanks in the Cell 1 pit were isolated in 1972 by cutting and welding or capping all piping extending above the lead floors; vessel off-gas is being maintained on the tanks.) The pits and floors of the cells are lined with stainless steel and the concrete walls painted with Amercoat 33.

The front and side walls of the cells are 4-ft-thick barytes concrete. The front wall contains a 4-ft-thick lead glass window. The rear wall is 5-ft.-6-in.-thick concrete and the roof is 5-ft-thick concrete. All openings into the cells are gasketed and sealed against extraneous leaks, allowing air into the cells only through the filtered air inlet ducts and back-flow preventers in the rear doors.

A 6-ft-wide by 6-ft-6-in.-high opening in the rear of each cell is closed by a concrete door that rolls on wheels and track. This door is sealed by a gasket joint against an angle iron framework inside the cell. Security locks on the doors prevent unauthorized access to the cells. The original 4 x 6-ft openings in the tops of the cells have been filled

with special roof plugs to accommodate equipment handling facilities needed for each program.

Each cell has two 10-in.-diam sleeves in the operating (south) face for a pair of masterslave manipulators. In addition, the fronts of the cells have one 6-in. sleeve, one 3-in. sleeve, and 23 2-in. sleeves. The rear walls contain four 2-in. sleeves and one 3-in. sleeve to the second floor at the rear of the cell bank. The roof of each cell contains two 6-in. sleeves to the penthouse. Each of the above mentioned sleeves is sealed at the exterior by a gasket within a screwed cap or enters a special bulkhead located in the cell. The special lead-shielded plugs containing service lines are shown on Dwg. No. D-38617A.

2.1.2 Alpha Hazard Containment

Additional containment features provided in recognition of alpha hazards are as follows:

1. The manipulators are equipped with replaceable vinyl boots. The wall juncture is made with a compression rubber gasket seal ring on the inside of an extension of the manipulator sleeve (Dwg. No. D-53664). This ring is pushed into the cell with a following replacement ring with a new boot attached. Boots are replaced when punctured.
2. Bulkhead boxes are installed in Cells 3 and 4 in the rear top, and right and left front top corners of the cell. All service, chemical, and electrical

lines entering through the existing holes in the cell face and rear are sealed in passing through the walls of these boxes (Dwg. No. E-53550).

3. Sheet metal bulkheads have been installed immediately inside the rear cell entries to supplement the rear door gasketed seal (D-45943). These bulkheads contain air filters for cell ventilation (and in Cells 3 and 4, a viewing window containing glove ports). This permits minor maintenance to be performed in Cells 3 or 4 without breaking cell containment after proper decontamination.
4. A seal plate has been installed below the existing roof plug opening of Cells 3 and 4, and all penetrations through this plate are welded to it and form a continuous seal with roof area maintenance and sampling equipment.

2.1.3 Cell Support Equipment

Operating Area. - The operating area located at the window (south) side of the cells contains instrument panels and service piping racks. All water, air, steam, and services entering the cells from this area should be of metal construction and equipped with check valves to prevent contamination backup into the operating area. Spare lines terminating in the operating area are capped as well as plugged in the cell. The instrument panel recorders are fed from transmitters located in the makeup area at the rear of the cells. Wiring to the

cells enters the cells via bulkhead seals or is potted in rubber or plastic in shielded plugs.

Chemical Makeup Area. - The chemical makeup area was designed to contain tanks and pumps for feeding cold chemical streams to solvent extraction and other equipment in the cells. This area also contains the transmitters for air purge instruments, solution addition funnel stations for transferring solutions to the cell tanks, and a steam ejector that provides the building vacuum supply. Piping from this area is of metal construction and enters the cells via existing sleeves and through bulkhead boxes in Cells 3 and 4. Check valves are used on the service lines. Polyethylene tubing may be used only outside of the cells to extend instrument lines.

Penthouse Area. - A schematic layout of the equipment located in the west area of the penthouse is shown on Drawing E-53650. The large glove box straddling Cells 3 and 4 is an alpha-sealed equipment removal cubicle (D-45917) to be used for maintenance and transfer of large items of equipment. It is sealed from the cell during normal operation by lead and concrete shielding plugs and a gasketed seal plate. Items transferred into or out of this cubicle will be bagged utilizing standard alpha-contaminated transfers techniques.

A sample transfer system (E-53653) is connected to Cell 4 via an 8-in.-diam shielded transfer tube terminating in an alpha-sealed lead shielded glove box. Samples are transferred from this box via a sealed container into a shielded carrier or into the adjacent cold transfer box where alpha-contaminated transfer techniques are used. The cell

to box transfer tube has a gasketed shielding door at its upper terminus to limit the amount of cell contamination entering this box as well as shield personnel hands during necessary maintenance.

Small items of decontaminated equipment from Cells 3 and 4 may follow this hot-to-cold box route as well as the reverse procedure being used to admit small items to the cell.

The mixer-settler drive box (D-45820) is an alpha-sealed glove box containing motors for driving cell equipment. The tubes containing the flexible shafts are purged with ventilation air to limit contamination from the cell through the bearings. The shafts can be removed for maintenance by disconnecting in the cell and bagging them out through the port on top of this box.

Atop Cell 1 is a 4-ft-7-in. wide by 6-ft-6-in. long by 5-ft-6-in. high (interior) stainless steel glove box shielded by 6 inches of steel. This cave is equipped with a 6-in.-thick lead glass viewing window and a pair of Model G compact manipulators as well as with standard gloved ports inside the shielding. The cave was designed to serve as a medium-activity-level periscope-camera facility, sample and waste removal area, and equipment addition and removal station. A series of drawings (M-20641-E1-001-D ff) describes the cave. Normal bagging procedures are used for removal of alpha-active materials, plus shielded containers for alpha-beta-gamma active nuclides. The cave base is sealed to the cell block by concrete grout and caulking, while the alpha box itself is welded to cave base. Air flow is into the box from the penthouse through a HEPA filter inlet, and out of the box via the cell ventilation system below in Cell 1.

The top of Cell 2 is sealed by the standard gasketed steel containment plate (Dwg. No. D-38618A). The roof plug itself contains a nominal 6-in.-diam (5-3/4-in. actual) "sample" hole closed by a manually-operated slide valve with a steel cover plate and a nominal 14-in.-diam (13-in. actual) "waste removal" hole closed by a motor-driven ball valve and a concrete shielding plug (Dwg. No. D-54248).

Cells 1 and 2 like Cells 3 and 4 are now connected with intercell transfer ports. The transfer ports contain rolling carts which may be pushed between the cells using the manipulators. Doors on each end of the transfer mechanisms limit the air flow between cells. The Cell 1-2 unit is shown on Dwg. No. M-20641-CD-001E and -002E; the cell 3-4 unit is shown on Dwg. No. D-45895 ff.

2.2 Building Containment

2.2.1 Ventilation

Existing air flow patterns were shown schematically in Figs. 2 and 3 and in detail on Dwg. Nos. D-25756, D-38980, D-38981, and D-38986. Under normal conditions, filtered air is introduced into the building through the 10-ton air conditioner and an emergency air inlet in the front operating area, passes through the Change Room into the Charging Area through a backflow preventer, and enters the cells through "Dust-stop" and HEPA filters and backflow preventers on the rear cell doors. The cell ventilation system permits a maximum of 600 scfm of air to be withdrawn from each cell through a 16 x 24-in. vent and backflow preventer (Dwg. No. D-39299) at its base which connects to a 30-in. header leading to the Bldg. 4556 filter house, the 3106 central filtration

units, and 3039 stack. The operating area is maintained at -0.15 in. of water relative to the atmosphere, while the cells are normally maintained at about -1.4 inch of water relative to the operating area by adjustment of dampers. This provides a one-way flow pattern into areas of increasing contamination and hazard (Fig. 5a and Table 3). Under emergency conditions the normal air inlets are automatically closed, creating a higher vacuum in the building (Fig. 5b).

During the summer, ventilation air in the penthouse enters through three filtered inlets and is exhausted to the atmosphere through roughing and HEPA filters by a large blower mounted on the roof (Dwg. No. D-38983). Under emergency containment conditions, the inlets are automatically closed, the blower shut off, and a quick-opening pneumatic damper to the cell ventilation duct opened completely (Dwg. No. D-38984R1). In the winter, the blower is not operated, and air flows from the inlets to the partially open damper on the emergency exhaust duct.

All roughing and HEPA filters in 4507 and 4556 are routinely tested by the ORNL Inspection Engineering Department with di-octyl phthalate (DOP). Charcoal filters would be tested with ^{131}I tracer techniques.

2.2.2 General

The Building 4507 containment equipment locations, wiring diagrams, and indicating panels are shown on Dwg. Nos. D-39771R1, D-39772, and D-39773, and the alarm connections to the ORNL alarm panel at Guard Headquarters on Dwg. No. Q-1920-13. Other alarms signal Shift Patrol Headquarters in Bldg. 3105. Routine periodic surveillance is maintained

ORNL DWG 73-8628

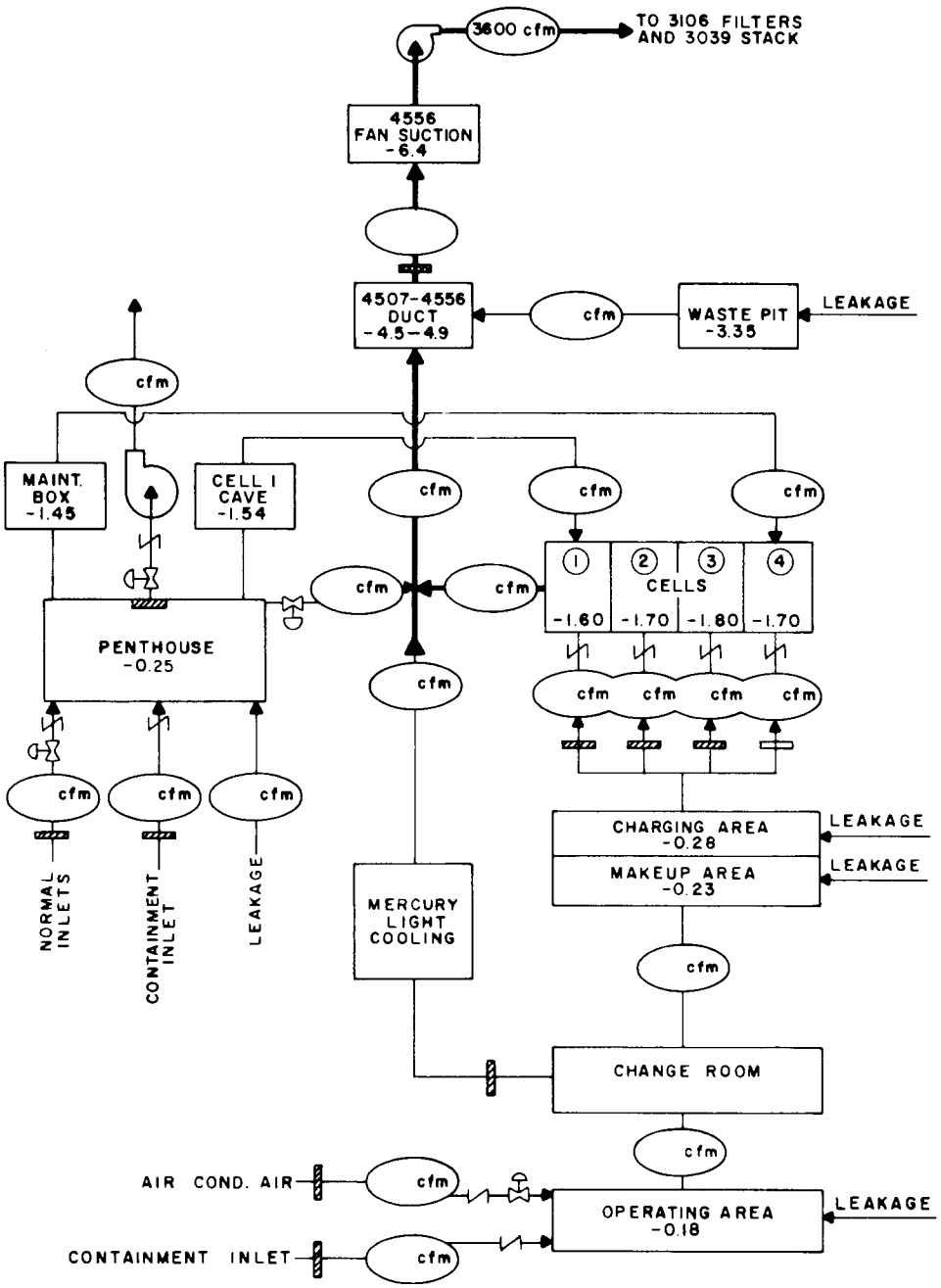

Fig. 5a. Bldg. 4507 Vacuum under Normal Conditions.

Table 3. Pressure Differentials in Building 4507

Area	Relative Pressure Differentials (in. H_2O)	
	Normal	Containment
Fan suction at 4556 to outside	-5.9	-5.2
20-in. duct at 4556 to outside	-4.3	-3.4
30-in. duct at 4507 to Operating Area	-3.9	-2.9
Operating Area to outside	-0.15	-0.27
Makeup Area to Operating Area	-0.20	-0.25
Charging Area to Operating Area	-0.25	-0.31
Penthouse (summer) to outside	-0.24	>0.5
Penthouse (winter) to outside	-0.21	>0.5
Waste Pit to Operating Area	-2.9	-2.2
Cell 1 to Operating Area	-1.45	-1.15
Cell 2 to Operating Area	-1.47	-1.15
Cell 3 to Operating Area	-1.45	-1.10
Cell 4 to Operating Area	-1.54	-1.15
Cell 1 Cave to Penthouse	-1.36	-1.0
Maintenance Box to Penthouse	-1.25	-1.0
Mixer-Settler Drive Box to Penthouse	-1.13	-1.0

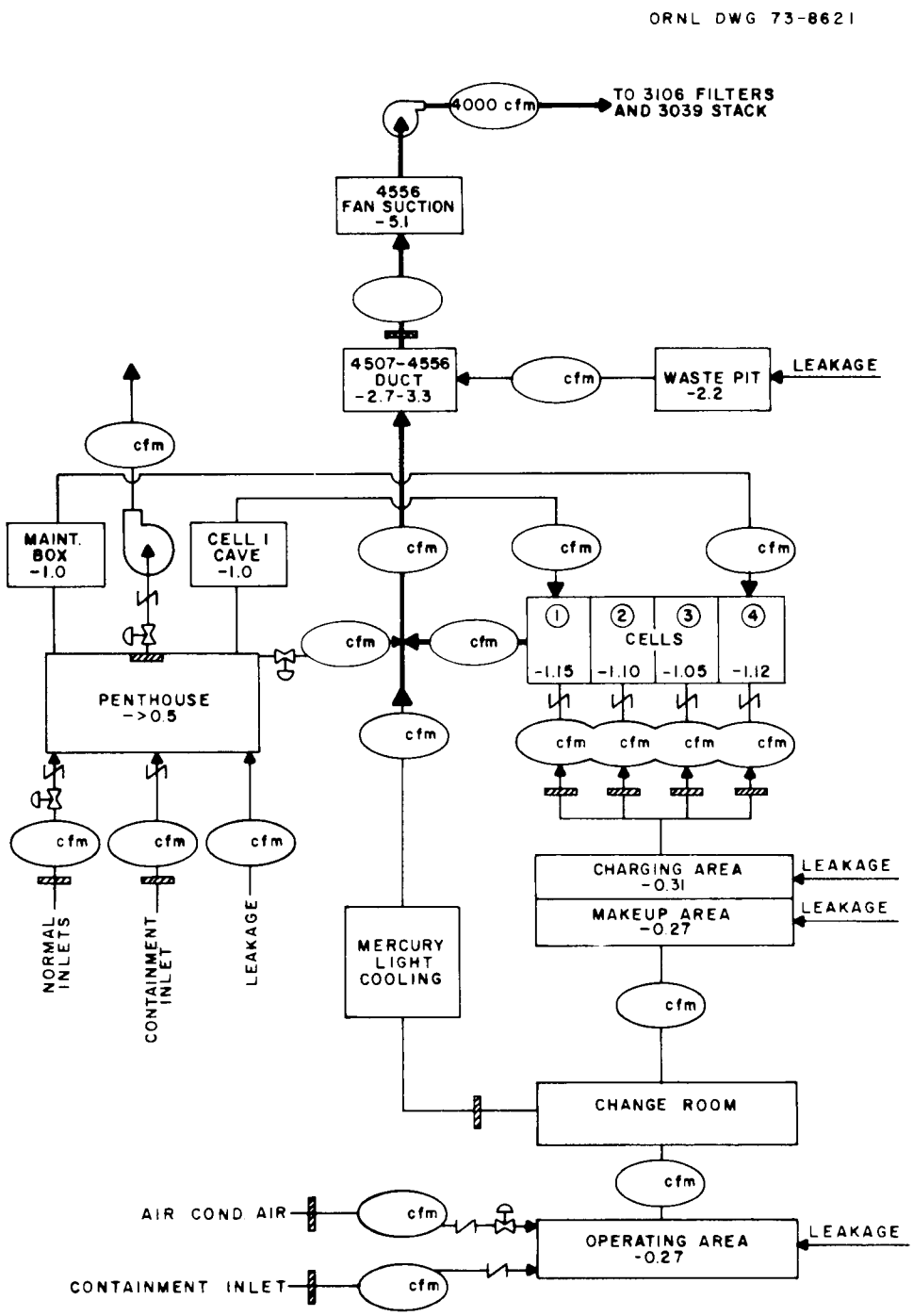

Fig. 5b. Bldg. 4507 Vacuum under Containment Conditions.

in 4507 by the Shift Patrol during nights and weekends. A remote readout of the 3039 stack radiation monitor is located on the containment panel in the operating area of 4507; this serves to indicate releases of gaseous fission products at the stack, and stimulate close observation of process conditions in 4507.

2.2.3 Administrative Control

Approval of the Building Supervisor or his alternate, and concurrence by HP is required to:

1. Open penthouse gantry crane door.
2. Open monorail door in charging area.
3. Open both doors simultaneously of any vestibule.
4. Change settings on cell exhaust dampers.
5. Open rear plug doors to "hot" cells.
6. Open any sealed access hole to "hot" cells.
7. Change settings on valves in valve pit or radioactive waste storage pit.
8. Perform maintenance or construction in or on the building.
9. Jet cell tanks in Cells 3 and 4 to send hot waste to WC-14.
10. Bring fissionable materials into the building or to transfer them between cells.

Permanently assigned Chemical Technology Division supervisors or Health Physics personnel may approve use of emergency exit vestibules and stairway to convey items in or out of the building. When thus used, only one door of the vestibule may be opened at a time such that secondary containment is not broken. HP surveillance is required to assure that no contamination escapes from the building.

Permanently assigned Chemical Technology Division supervisors may authorize minor maintenance work on equipment related only to their project in 4507. Before authorizing such work, the Chemical Technology Division supervisor must issue a Hazards Work Permit in duplicate. One copy is placed on a clipboard in the front operating area to inform others of work in progress.

Before maintenance work is performed in any cell or on any line or system directly connected to the cells, a Radiation Work Permit (RWP) must be issued by the Chemical Technology Division supervisor, and initialed by the building supervisor or his alternate. One copy of the RWP should be attached to the clipboard for information and final deposition. Health Physics aids in writing these permits.

3.0 CHEMICAL PROCESSES

Although Building 4507 has served as a pilot plant or a small production facility in the past, its use has reverted to the original purpose of small-scale development and demonstration of reactor fuel reprocessing flowsheets using highly irradiated samples. Process requirements usually change and are modified as each flowsheet develops; consequently no fixed flowsheet can be described. (Typical flowsheets are in Appendix C.) Current (1973) programs involve studies of head-end operations for HTGR and LMFBR processing. These operations include shearing stainless steel or Zircaloy-clad fuel rods containing UO_2 and/or $(U,Pu)O_2$, or crushing and grinding graphite shapes containing UO_2, $(U,Th)O_2$, UC_2, or $(U,Th)C_2$ fuel particles. The fuels may then be heated or burned in closed systems to volatilize gaseous fission

products and/or remove the graphite. The residues are leached with nitric acid, fluoride-catalyzed nitric acid, or other medium to dissolve the fuels for further treatment prior to recovery or disposal of the source and fissile materials.

The scale of operations in any experiment generally involves less than 50 g of fuel, and in most cases less than 10 g. Typical volumes of reagents are listed in Table 4.

Table 4. Reagents Used in Flowsheet Tests

Reagent	Approximate Total Volume, liters	
	HTGR	LMFBR
Air or oxygen	20-30	20-30
Inert gases	20-30	20-30
1 M NaOH	0.1	0.2
0.1 M HNO_3--0.05 M $Hg(NO_3)_2$	--	12-16
8 M HNO_3	0.1	0.2
8 M HNO_3--0.05 M HF	0.1	0.1
13 M HNO_3--0.1 M Al--0.05 M HF	0.1	0.1
15.8 M HNO_3	0.2	0.2

4.0 CRITICALITY

Criticality control in Building 4507 is by administrative supervision and mass limitation. The current Nuclear Safety Review NSR-621, under which operations are conducted, permits any one cell to contain up to 350 g of ^{235}U, or 250 g of ^{233}U or ^{239}Pu, or 250 g of any combination

thereof. The entire building may not contain twice those amounts. Under these limits the minimum natural-water moderated and reflected critical masses of 510 g for ^{239}Pu, 588 g for ^{233}U, and 800 g for ^{235}U should never be reached. Up-to-date inventories of fissionable material in each cell will be kept posted by each cell supervisor and no material brought into the building without permission. Excess materials should be stored in the Building 3597 Hot Garden and Canal.

Aqueous liquid wastes containing ^{233}U or ^{235}U must be diluted with ^{238}U to <1% ^{233}U or ^{235}U prior to discharge to the ORNL liquid waste system. Aqueous wastes containing ^{239}Pu must be diluted 100-fold (molar basis) with ^{232}Th prior to discharge. Proper records of the dilutions will be kept by cell supervision. Large quantities (>1 liter) of organic wastes will not be discharged to the liquid waste system without permission of the Operations Division.

Table 5, reproduced from the original Building 4507 Hazards Evaluation (ORNL CF-60-5-25), summarizes the effects of a nuclear incident of 10^{18} fissions within one of the cells. It indicates that such an incident would be contained by the primary containment (shielded cell) area. The effects on the environment of material released via the cell ventilation system in the table do not include the contribution of the additional line of HEPA filtration provided by the new Building 4556 filter house.

Table 5. Effects of Nuclear Reaction of 10^{18} Fissions Followed by Rupture of Vessel, Building 4507[a]

	Aerosol Release[b]	Gaseous fp Release[b]
Maximum downwind integrated dose from VOG release, rem	<0.001	0.61
Maximum downwind integrated dose from COG release, rem	<0.001	0.17
2-min dose from secondary containment shell, rem	<0.001	10.7
Maximum downwind integrated dose from building release, rem	<0.001	<0.001
Neutron + prompt gamma dose, rem	0.04[c]	

[a]Feed adjustment tank.

[b]Does not include effect of Bldg. 4556 HEPA filtration.

[c]Through concrete shield.

5.0 OPERATING SAFEGUARDS

5.1 Hazards Evaluations

All operations in Building 4507 must be conducted in a safe manner, so that exposures of operating personnel to ionizing radiation are minimal and so that no radioactive materials are released to the environment from the containment envelopes. Therefore, each new operation or project proposed for Building 4507 must submit a Hazards Evaluation Report to the building supervisor for approval, to the appropriate section chief or assistant section chief, to the Chemical Technology Radiation Control Officer, and in the case of a major project, to the Radioactive Operations Committee operating under the ORNL Radiation Safety and Control Department.

The advice and counsel of representatives of Applied Health Physics is mandatory. A guide for the preparation of such a Hazards Evaluation is included in Chapter 7 of the ORNL Radiation Safety and Control Training Manual.

5.2 Planning Experiments

It is suggested that operating procedures and run sheets (Appendix C) be prepared by the experimenters and submitted for approval before starting any operation. Changes in procedure must be approved by the building supervisor before they are instituted; this is necessary to ensure the safe operation of the other cells in the facility. No changes in piping, instrumentation, or other services may be made without approval for the same reason.

Experimenters and operators of each cell must familiarize themselves with the radiation control and alarm systems of Building 4507, with the emergency equipment available, and with the procedures for the emergency containment and evacuation of the building. Continued close cooperation between the experimenters, operators, supervision, and Health Physics will ensure the desired safe operation.

The following list of operating safeguards should be included in the planning of any experiment:

1. Built-in safeguards (fail-safe) for the experiment or process.
2. Procedural safeguards for the experiment or process.
3. Adequate transfer of information between shifts.
4. Control and recording of tank inventories.

5. Control and recording of fissionable material inventories.
6. Planning for emergency action in the experimental cell or support equipment.
7. The use of pressure relief devices to prevent rupture or uncontrolled leaks from process lines and vessels.[a]
8. Prevention of backup of radioactive materials into common utilities in the building.
9. Protection of instrumentation from process solutions.
10. Frequency and certification of instrument calibration.
11. Protection of steam jets against backup of process solutions.

5.3 Special Regulations Applying to the Penthouse

1. This area is normally a contamination zone. Shoe covers and lab coats or coveralls must be worn. Gloves taped to the sleeves must be worn when working in the glove boxes.
2. Lab coats should be kept in the air-lock. Lab coats left in the penthouse are considered contaminated (unless checked for contamination).
3. HP should be present when bagging out samples, trash, etc. When the bag-out operation is completed, the glove box, bag sealer, and surrounding floor area must be smeared by HP. In case HP cannot be present, the shift supervisor will smear the area and record the results and subsequent action taken in the log. All items leaving the high-level alpha glove boxes must be double bagged.

---

[a]Radioactive Operations Committee recommendation, ORNL CF-71-6-9 (June 1971).

4. Persons working in the glove boxes will slowly remove their hands from the gloves while the sleeves and gloves are monitored for alpha contamination. Contaminated clothing will be stripped off immediately and the port covered to prevent release of further activity if a breach occurs. The area will be quickly monitored to detect contamination on the surrounding equipment and floor.

5. A decontamination solution should be made up, ready to use, and stored on the north wall, along with cheese cloth and water.

6. All persons when leaving the immediate cell area and the penthouse will survey themselves at each place for alpha and beta-gamma contamination. Uncontaminated lab coats will be placed in the air lock. Lab coats which are contaminated will be placed in a plastic bag and left in the penthouse. Notify the building or shift supervisor immediately of contamination releases.

7. On encountering activity releases one will automatically take corrective action. Health Physics can be of great assistance in assessing the initial degree of damage; however, the shift supervisor is responsible for the safety and well being of his men.

8. The following table (Table 6) of transferable contamination levels should be used as a guide in determining the severity of spills. If the extent is unknown, the worst case will be assumed by personnel entering the area.

Table 6. Guide for Quick Estimation of Severity of Alpha Contamination Release[a]

Method of Detection[b,c]	Results (d/m/100 cm^2)	Requirements
Smear about 100 cm^2 and probe the smear on an alpha counter. Time the count rate if needed.	>3000	Evacuate and contain Maximum protection Radiation Work Permit
	>300	Coveralls, booties, gloves Respiratory protection if above MPC_a
	>3	Lab coat, shoecovers, gloves Respiratory protection if above MPC_a

[a]This guide will need to be adjusted by experience of the HP personnel and operating crew. It refers to localized contamination only. Widespread contamination cannot be handled by this means.

[b]Check hands directly on meter after every entry to any glove box. Change out of contaminated items immediately on finding any reading.

[c]Check all plastic bag seals and double bag immediately as a precaution.

9. Glove boxes must be kept free of trash. Do not leave your trash for the next person to bag out. Do not over-stuff the plastic bags or lard cans, you will probably break the seam of the bag.
10. Keep the floor clean.
11. Keep the north wall free of unnecessary items. No dead storage is permitted in this area. Only the most critical live storage is permitted.
12. Before operating the gantry crane, make sure that the rails are free of trash, wires, people, etc. The power must be shut off when the crane is standing for more than a few minutes to reset the alarm and prevent people from forgetting the blinking lights.

13. The gantry crane door may not be opened without supervisory approval.

14. Cask Handling. - A supply of adequately-sized and inspected wire rope "chokers" will be obtained from the Rigger (Ironworker) Loft at Building 7002, and used to handle all casks in Building 4507. Lifting capacities for each size of wire rope are attached to each choker on a small brass tag. The rated capacity of any crane or hoist must not be exceeded without approval of supervision and the Chemical Technology Division Safety Officer.
Use particular caution when handling heavy or massive items in the vicinity of the Cell 3-4 Curium Recovery Facility Maintenance Box. The glass must not be broken under any circumstances!

15. The glove ports on all of the Cell 3-4 maintenance box and auxiliary boxes must be kept covered by gloves or plastic sleeves and a metal disc or metal cover whenever they are not in actual use.

6.0 PERSONNEL EXPOSURE

6.1 Zoning

Exposure of operating personnel to ionizing radiation and contamination must be kept at an absolute minimum. This may be accomplished by adequate training of personnel and by observation of zoning practices established in accordance with the Health Physics Procedure Manual:
A "radiation zone" is an area where external radiation exposure to personnel is possible. A "contamination zone" is an area where the possibility of contamination of employees, environs, and/or equipment exists, and where there is a possibility that radioactive material may

be deposited inside the body. A "regulated zone" is an area where operations are restricted for the purpose of radioactive contamination control. This zone may contain radiation zones, contamination zones, or both, ranging in size from a small spot to a large area.

In Building 4507 the following zones and requirements have been established (Fig. 6):

Regulated Zone. - Entire building and loading area at west end. Either street or clean contamination zone clothing may be worn except in areas designated as contamination zones. Pocket dosimeters, film badges, and safety glasses must be worn by all personnel working in the building. Visitors authorized by supervision to enter radiation/contamination zones must wear an approved film badge and dosimeters.

Contamination Zones. - Cells 1, 2, 3, and 4, Penthouse, and other areas temporarily designated as contaminated. Contamination zone clothing required as specified at entrance to zone or on radiation work permit.

Radiation Zone. - Cells 1, 2, 3, and 4, maintenance box, Cell 1 cave, and other areas so designated. A radiation work permit is required for entry into radiation zones. Normal precautions to prevent exposures will be observed for work around radiation zones.

Personnel Monitoring. - Personnel are required to monitor themselves for both alpha and beta-gamma contamination when (1) leaving a contamination zone, (2) passing through the change room to the front operating area, and (3) before leaving the building (hand and foot counter and alpha counter).

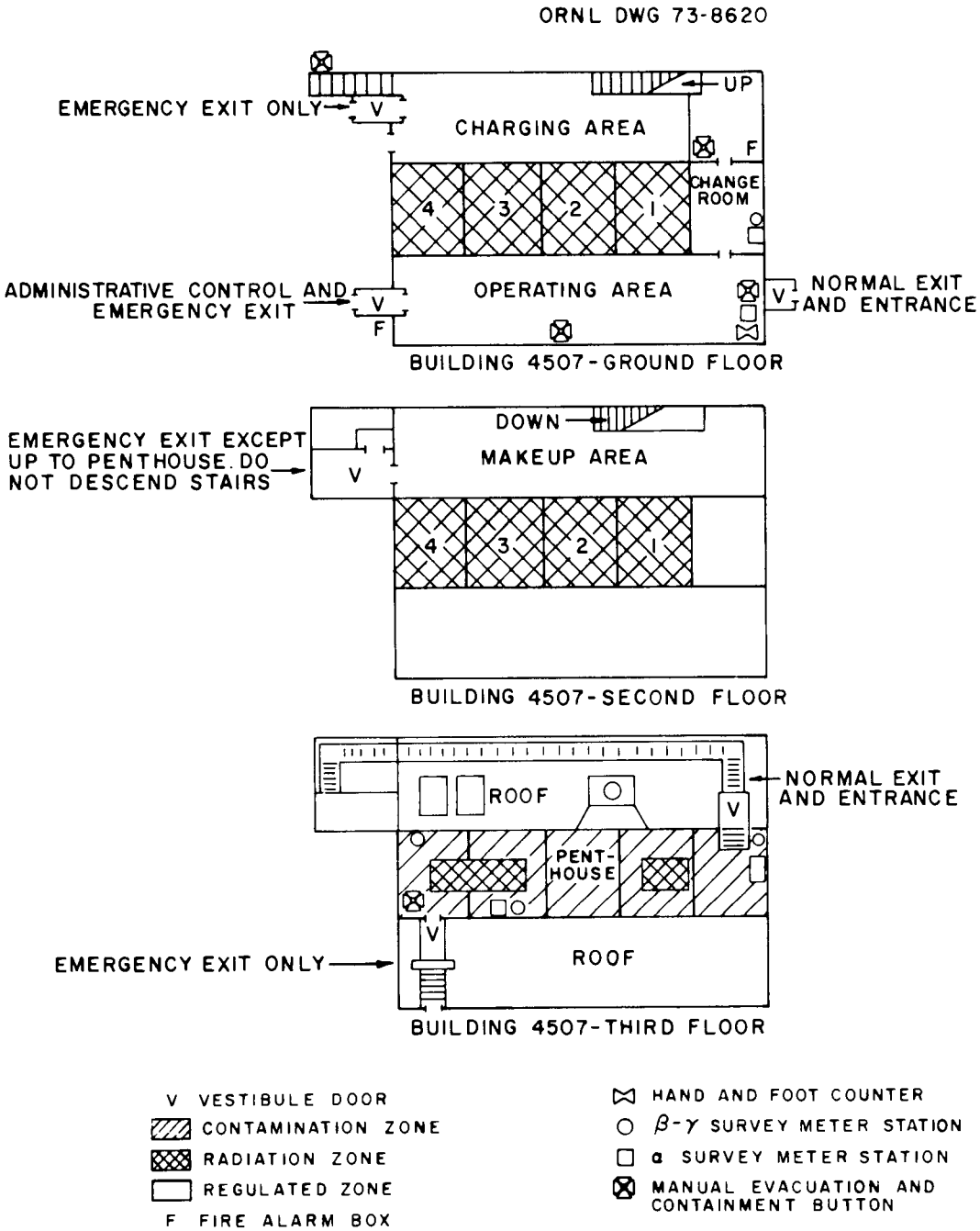

Fig. 6. Bldg. 4507 Zoning Areas.

6.2 Smoking and Eating

Smoking is permitted only in the front operating area. Eating or drinking (except for the water coolers) is not permitted anywhere in the building.

6.3 Radioactive Sources

The normal curie load for each cell under operating conditions is:

Cell Number	Program	Curie Load	
1	HTGR[a]	115	150-day-cooled, $^{235}UO_2$-ThO_2, (6 compacts)
2	LMFBR[b]	2600	30-day-cooled, 100,000 MWd/ton 25% PuO_2--75% UO_2 (4 rods)
3	Standby	-	-
4	Standby	-	-
1 Cave	HTGR	19	As above (<1 g fuel)

A normal curie load for the operating area is not recognized; sources of radiation must be kept within the designated contamination and radiation zones. Properly monitored and tagged tools, dirty laundry, analytical samples, etc., of less than 20 mr/hr, in sealed and/or shielded containers, may be brought through the operating area. During normal operation the gamma and neutron dose rate in the operating area is to be no greater than 0.25 mrem/hr, with permissible hot spots of small area, such as those opposite wall penetrations, no greater than 2.5 mrem/hr.

---

[a]Appendix E2.

[b]Appendix E1.

For special, non-routine operations such as when a TRU-HFIR rod is examined in front of the cell window, the neutron dose rate in the operating area may be approximately 2.5 mrem/hr. In limited access areas, not normally inhabited by operating personnel, the dose rate is to be less than 2.5 mrem/hr, with limited area hot spots no greater than ten times this value. For short-term, nonroutine operations, such as during equipment removal or carrier handling, radiation levels as high as 500 mrem/hr will be permitted. For very nonroutine operations, such as those involving special handling of small samples, radiation levels as high as 10 R/hr will be permitted under the direct supervision of the engineer in charge of operations and HP personnel.

7.0 RADIATION AND CONTAMINATION CONTROL

7.1 Radiation Monitors

The following radiation monitoring instruments (Table 7 and Fig. 7) are the responsibility of Building 4507 Applied Health Physics. Health Physics personnel make daily inspections of these instruments and arrange for maintenance as required. If an instrument is observed to be erratic or out of service, immediately refer the matter to the Health Physics office in 4500N Building, Room A-32, phone 3-6997. Maintenance of the instruments is performed by J. D. Blanton's group, phone 3-6875; the system is routinely tested quarterly by that group.

In addition to these instruments, in-cell beta-gamma radiation monitors (Q-2501) are located in each cell and in the Cell 1 Cave

Table 7. Building 4507 Instruments

	Alarm Level (mr)	Alarm Type	ORNL Prop. No.
CAAM Tape Type Operating Area S[a]	500 cpm	buzzer, lights	X-86348
CAAM Tape Type Charging Area N[a]	500 cpm	buzzer, lights	X-86350
CAAM Tape Type Penthouse S[a]	500 cpm	buzzer, lights	X-86359
CAM Filter Type Operating Area S[a]	1000 cpm	bell, buzzer, lights	X-66058
CAM Filter Type Charging Area N[a]	1000 cpm	bell, buzzer, lights	X-66054
CAM Tape Type Charging Area N[a]	1000 cpm	bell, buzzer, lights	X-80928
CAM Tape Type Penthouse N[a]	1000 cpm	bell, buzzer, lights	X-82065
CAM Tape Type Penthouse S[a]	1000 cpm	bell, buzzer, lights	X-80926
Monitron Operating Area S[a]	7.5 mr/hr	bell, buzzer, light	X-64420
Monitron Penthouse S[a]	7.5 mr/hr	bell, buzzer, light	X-100033
Monitron Charging Area Cell #1[a]	7.5 mr/hr	bell, buzzer, light	X-77444
Monitron Charging Area Cell #2[a]	7.5 mr/hr	bell, buzzer, light	X-64413
Monitron Charging Area Cell #3[a]	7.5 mr/hr	bell, buzzer, light	X-77443
Monitron Charging Area Cell #4[a]	7.5 mr/hr	bell, buzzer, light	X-64415
α Probe Q-2091 Operating Area E	500 cpm	buzzer	X-78786
α Probe Q-2091 Change Room	500 cpm	buzzer	X-78712
β-γ Probe Q-2091 Change Room	1000 cpm	buzzer	X-78787
β-γ Probe Q-2091 Makeup Area (2 probes)	1000 cpm	buzzer	X-79432
α Probe Q-2091 Penthouse S	500 cpm	buzzer	X-78479
α Probe Q-2091 Penthouse E	500 cpm	buzzer	X-78484
β-γ Probe Q-2091 Penthouse E	1000 cpm	buzzer	X-78480
β-γ Probe Q-2091 Penthouse S	1000 cpm	buzzer	X-86484
α Decade Scaler Operating Area S	none	none	X-92563
β-γ Decade Scaler Operating Area S	none	none	X-90010
β-γ Quintector Operating Area Cell Faces	5 mr/hr	electronic tone + light	X-111853
β-γ Hand & Foot Counter Operating Area S	none	none	X-72465
Neutron Monitor Operating Area S[a]	17 mr/hr	buzzer and light	X-92489
Neutron Monitor Charging Area N[a]	17 mr/hr	buzzer and light	X-92490
Neutron Monitor Penthouse Area N[a]	17 mr/hr	buzzer and light	X-92488
β-γ Process Water Monitor Penthouse N		buzzer and light	X-86317
α Process Water Monitor Cold Tunnel E		buzzer and light	
β-γ Process Water Monitor Cold Tunnel E		buzzer and light	
Cell 1 In-Cell Monitor (Q-2501)	none	none	X-86283
Cell 2 In-Cell Monitor (Q-2501)	none	none	X-89290
Cell 3 In-Cell Monitor (Q-2501)	none	none	X-89303
Cell 1 Cave Monitor (Q-2501)	none	none	X-89304

[a]Part of automatic containment system.

ORNL DWG 73-8633R1

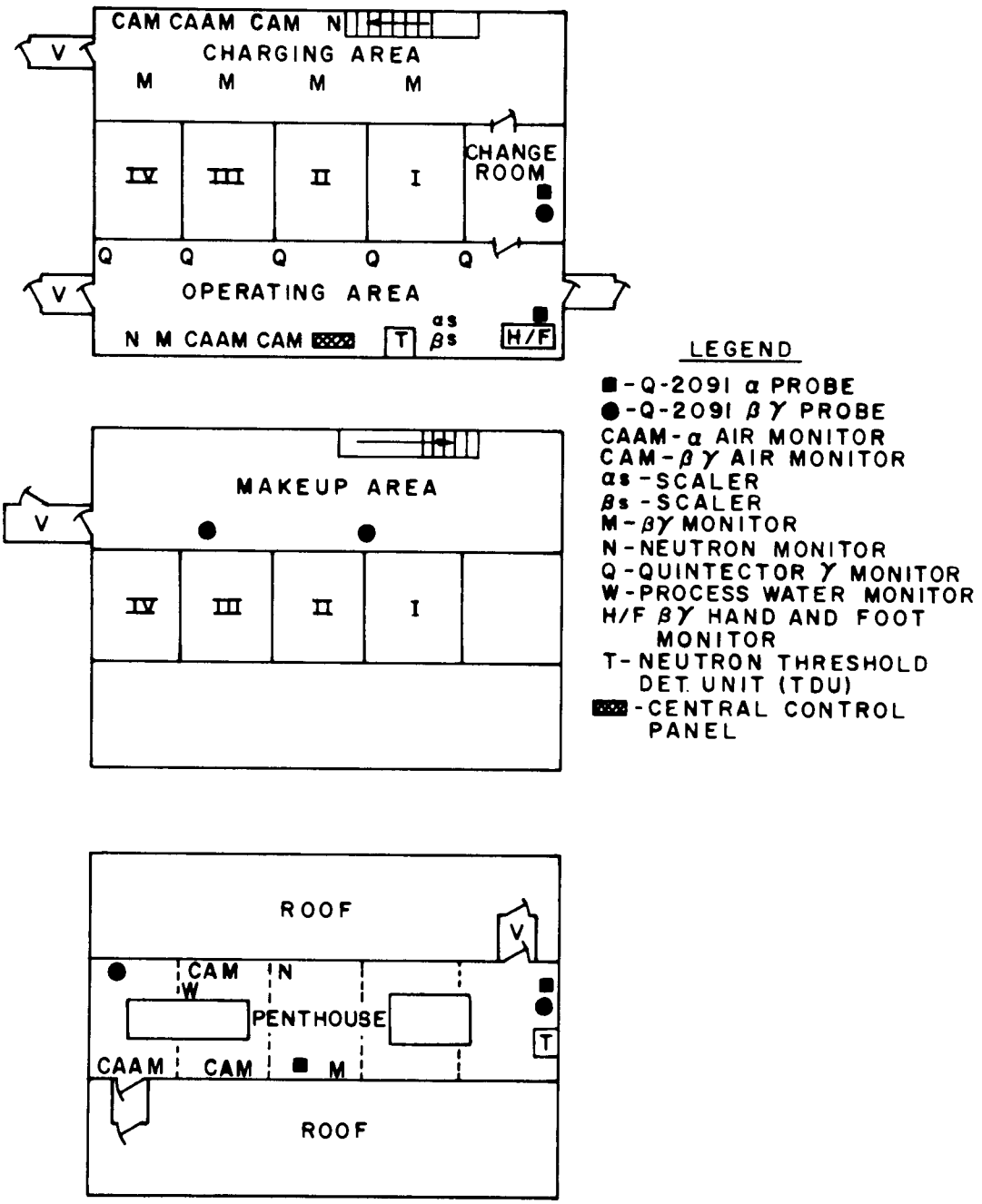

Fig. 7. Bldg. 4507 Radiation and Contamination Monitors.

facility. These and the Operating Area Quintector Gamma Monitor (Q-3006) are operational (process control) instruments and the responsibility of Building 4507 supervision.

7.2 Containment System

7.2.1 Description

The High Radiation Level Chemical Development Laboratory (Building 4507) is one of several facilities at Oak Ridge National Laboratory equipped with networks of radiation and air monitoring instruments connected to a central monitoring area within the building and to the Laboratory Emergency Control Center. Facility Radiation and Contamination Systems were installed in Building 4507 to continuously and automatically determine the radiation condition of the entire facility and to report this information to a central control panel within the building. Should the radiation level or the air activity in several isolated portions of the building exceed preset values, an audible alarm in the building will be actuated, the building containment system will be actuated, warning lights outside the building will flash, and an alarm signal will be transmitted to the Emergency Control Center, Building 2500. Details of the system are found in ORNL-TM-1668 (October 1966) by F. A. Russell, Jr., and D. J. Knowles.

The gamma radiation level is monitored by 6 monitrons located throughout the building (Table 8). The neutron radiation level is monitored by three neutron rate and burst detectors located throughout the building. Air is monitored for beta-gamma emitting particles by five continuous air

Table 8. Radiation Contamination and Neutron Monitors Installed in Building 4507

	Monitor No.
1. Facility Radiation Monitors[a,b]	
Cell 1	M1
Cell 2	M2
Cell 3	M3
Cell 4	M4
Operating Area	M5
Penthouse	M6
2. Facility Neutron Radiation Monitors[c]	
Operating Area	N1
Charging Area	N2
Penthouse	N3
3. Facility Alpha Contamination Alarm Monitors[f,g]	
Operating Area	A1
Charging Area	A2
Penthouse	A3
4. Facility Beta-Gamma Contamination Alarm Monitors[b]	
Operating Area[e]	B1
Charging Area, West[e]	B2
Charging Area, East[d]	B3
Penthouse, West[d]	B4
Penthouse, East[d]	B5

a. All monitors are Q-1154B-13.
b. Coincidence of any two high level alarms causes automatic evacuation and building containment.
c. All monitors are ORNL model Q-2562 Neutron Burst-Rate Detectors. Coincidence of either alarm from any two instruments causes automatic evacuation.
d. ORNL model Q-2240B-4 Constant Air Monitor.
e. ORNL model Q-1740 Mobile Air Monitor.
f. All monitors are ORNL model Q-2340 Constant Alpha air monitors.
g. Coincidence of any high level alarm causes evacuation and building containment.

monitors (CAM) and for alpha emitting particles by three continuous alpha air monitors (CAAM).

The high-level alarm outputs of the monitron indicator modules are connected to a coincidence module so that the building is contained and evacuation alarms are operated if high-level signals are received from one of four monitrons in the charging area and from either the penthouse or the operating area monitron, or the penthouse monitron and the operating area monitron. The high-level alarm outputs of the beta-gamma continuous air monitor indicator modules are connected so that the building is contained and evacuation alarms operate when any two of the continuous air monitors are in the "high level" alarm condition.

The high-level alarm outputs of the continuous alpha air monitor indicator modules are connected so that the building is contained and evacuation alarms operate when any one continuous alpha air monitoring instrument is in the "high level" alarm condition. The high-level alarm outputs of the neutron burst-rate detectors are connected so that evacuation alarms sound whenever two or more instruments are in alarm condition.

7.2.2 Instruments and Alarms

Monitron. - The Remote Monitron (ORNL Model Q-1154B) is an ac-powered, null-type radiation detection instrument for monitoring gamma radiation.

The instrument and alarms operate as follows:

1. A power failure or a disconnected power cord will cause the white lamp on the central control panel to burn brightly. After power is restored and a 1-min delay for warm-up, the white lamp resets itself. During this 1-min delay, the caution level alarm at the instrument might sound, but caution and high-level alarms are locked out and will not be sent to the central panel.
2. If the caution level of 7.5 mr/hr is exceeded, an electronic alarm circuit causes the yellow lamp on the central panel to burn brightly, a buzzer on the central alarm panel to sound, the red light on the monitron to light, and the bell at the instrument to ring. The alarms are automatically reset at the instrument when the radiation level decreases below 7.5 mr/hr, but they must be reset manually at the central panel.
3. The 0- to 1-ma meter output terminals are connected to the accessory meter relay, which is set to operate when the 23 mr/hr (high-level alarm) set-point is exceeded. At 23 mr/hr, the bell at the instrument will be ringing, since it started at 7.5 mr/hr, and the red lamp on the central panel will burn brightly. When the radiation level decreases to less than 23 mr/hr, the high-level alarm at the instrument is automatically reset. The central panel alarm is reset manually.

Air Monitors. - Two types of beta-gamma air monitors were installed: an older model, the Mobile Air Monitor (ORNL Model Q-1740B); and its

successor, the Beta-Gamma Continuous Air Monitor (ORNL Model Q-2240B). The alpha air monitors (ORNL Model Q-2340) are similar in appearance to the Q-2240 continuous air monitor.

Mobile Air Monitor. - This monitor consists of an aspirating system, a paper filter, a halogen-type Geiger-Mueller tube detector, a logarithmic count-rate meter, and visible and audible alarms. Any background radiation level within the range of the instrument can be suppressed, and from one to five decades may be selected for display on a strip-chart recorder. This scale arrangement allows the instrument to accumulate air contamination data while operating in areas where the background count is high.

A Model H, Leeds & Northrup Speedomax recorder with upscale, downscale, and set-point alarms indicates high radiation, instrument failure, and above tolerance contamination, respectively. The local alarm circuit is so arranged that, if the air contamination increases to a point above the set point, an amber local annunciator light, indicating tolerance level, is actuated. At very high radiation conditions, an alarm bell and a red annunciator light are actuated simultaneously. The local annunciator lights are mounted on top of the instrument cabinet so that operation of the monitor can be observed from any position in the immediate area. A time delay relay prevents remote alarms from operating until the instrument has warmed up after being turned on.

Beta-Gamma Continuous Air Monitor. - This monitor consists of an aspirating system, a paper-type filter, a halogen-type Geiger-Mueller tube detector, a linear count-rate meter, a recorder, and visible and

audible alarms. Air is drawn through the filter at 3 cfm (controlled manually) by a blower. A sample of dust particles in the air is collected on the paper-tape filter. The sample tape is advanced automatically every 24 hours. The tape may be advanced manually at any time by the operator. The detector counts the sample as it is being collected.

The rate meter has adjustable high-level and caution alarms. The instrument has an alarm panel with four lights, a bell, and a buzzer. When the caution set point is reached, an amber lamp is lighted and the buzzer is energized. There is no switch to silence the buzzer, and the operator is expected to advance the tape when this point is reached. When the high-level trip point is reached, a red lamp is lighted and the bell rings. The bell can be silenced by a toggle switch and, when this is done, an amber neon indicator is lighted.

When the filter tape breaks, a red neon indicator is energized and the caution circuit is energized through a flasher. The amber neon bulb burns continuously, and the caution light and the buzzer come on intermittently. If a tape breaks and, at the same time, the caution alarm sounds, the tape-break neon light, the caution light, and the buzzer will be on continuously. A test pushbutton permits checking the alarm panel by simultaneously simulating tape break and high-level alarm signals.

An auxiliary alarm chassis, mounted on the inside rear of the instrument, contains a meter-relay which when de-energized (reads zero) lights the instrument "inoperative" alarm on the central panel module.

Continuous Alpha Air Monitor. - This instrument consists of an aspirating system, a paper-tape filter, a scintillation detector, a linear count-rate meter, a recorder, and visible and audible alarms. Air is drawn through the filter at 3 cfm (controlled manually) by a blower. A sample of dust particles in the air is collected on the paper-tape filter. The sample tape is automatically advanced once every 24 hours, and after a caution level alarm. The tape may be advanced manually at any time by the operator. The detector, which counts the sample as it is being collected, is a silver-activated zinc sulfide scintillator having an effective detector diameter of 1-7/8 in. The detector window (nominal thickness of 1 mg/cm^2) is light-tight.

When the instrument connected to an indicator module is operating normally, all lamps on that module are dim. When the module receives a signal that the instrument is operating abnormally or that the caution level or the high-level alarm values have been exceeded, the lamps burn at full intensity: white for inoperative instrument, yellow for caution level, and red for high level. A signal is also generated by the module which causes a buzzer to sound. The white lamp indication will remain until the condition causing the alarm is cleared, at which time the lamp will return to the dim condition. The red and amber lights will remain bright until they are manually reset by means of a pushbutton on the indicator module. If the indicator module is reset when the alarm or abnormal condition still exists, the lamps will momentarily become dim when the reset button is depressed, and then will become bright and the buzzer will sound again when the reset button is released.

7.2.3 Central Panel Board

The central panelboard for the system is located in the Operating Area. It contains the lights and audible alarms, power supplies, and certain control switches.

Control Switches. - A key-operated switch, labeled "normal-disable," on the central control panelboard may be used to disconnect the air whistles and beacons during maintenance or abnormal operation periods. Since the Emergency Control Center receives an alarm signal when the switch is moved to the "disable" position, the Control Center should be notified before the switch is set at this position.

A large red pushbutton on the central control panel, labeled "manual evacuate," actuates the air whistles and beacons, transmits an alarm signal to the Emergency Control Center (if the Center has not already received an alarm), and contains the building, regardless of the position of the "normal-disable" switch. If the manual evacuation pushbutton has been used, it must be reset by pressing the "reset" pushbutton on the module to restore the system to the normal conditions. In addition to the central control panel location, four remote evacuation and containment pushbuttons are located (Fig. 6) (1) at the east vestibule door of the Operating Area, (2) at the Change Room door out of the Charging Area, (3) at the foot of the steps leading to the Penthouse (ground level), and (4) at the southwest corner of the Penthouse adjacent to the vestibule door.

A "manual building contain" pushbutton is provided which places the building in containment without sounding the evacuation alarm or sending an alarm signal to the emergency control center.

Acknowledge and reset pushbuttons for the annunciators are located on the containment control rack. These pushbuttons silence and reset the annunciators in the normal manner.

Caution and high-level alarms for alpha and for beta-gamma activities in the main 4507 process water drain (in the 4505 "Hot Tunnel") are located on the central control panel. Alarms from the Q-2091 beta-gamma "sleeve monitor" in the makeup area are also located there.

Power Supplies. - The main power for the system is 120-v, 60 cycle, and is supplied from the emergency power bus in Building 4507 to the 24-v dc power supply and the monitoring instruments.

The 24-v dc transistorized power supply is a regulated voltage and current unit. A green "power on" lamp on the control chassis and a neon lamp on the power supply panel will be brightly lighted to indicate that the power supplies are operating.

Vacuum and Liquid-Level Indicators. - The central panelboard in the Operating Area is also the location of a number of gages and audible alarms that indicate the condition of the building ventilation system, the vessel off-gas system, and the liquid levels in various sumps and pits.

7.3 Neutron Threshold Detector Units

Two neutron threshold detector units (TDU), remotely recoverable by Health Physics personnel from the outside of Bldg. 4507, have been installed to provide estimates of neutron flux and personnel doses in the event of a criticality accident in the building. One is located

in the south wall of the operating area and the other in the east wall of the penthouse.

7.4 Removal of Building from Containment

It should be recognized that there will be occasions of spurious containment caused by instrument failure or building power failure. When these occur, the building can be taken out of emergency containment by (1) pushing the "Reset" button on the containment switch which resets the relays, and (2) pushing the "Start" button on the switch which controls the penthouse exhaust fan. With these actions, the louvers on the various air inlets will open, returning the building to normal operating conditions.

8.0 LIQUID WASTE SYSTEMS

8.1 Process Water Waste

Process cooling water waste, arising from the operation of aspirators, heating jackets, coils, etc. (expected to contain only limited amounts of radioactive materials), leaves each cell via a 2-in. drain (Fig. 8) which ties to a common header exiting from the north side of the building. It continues into a tunnel in Bldg. 4505, passes through a radiation monitoring station, and then connects to a 4-in. process water waste header. Any alarm on the central control panel, which indicates radioactivity in the process drain, is a signal for all processes using the drain to cease operation until the cause of the alarm is found and corrected. Steam condensate from the tank heating coils in Cell 4 was

ORNL DWG 73-8625

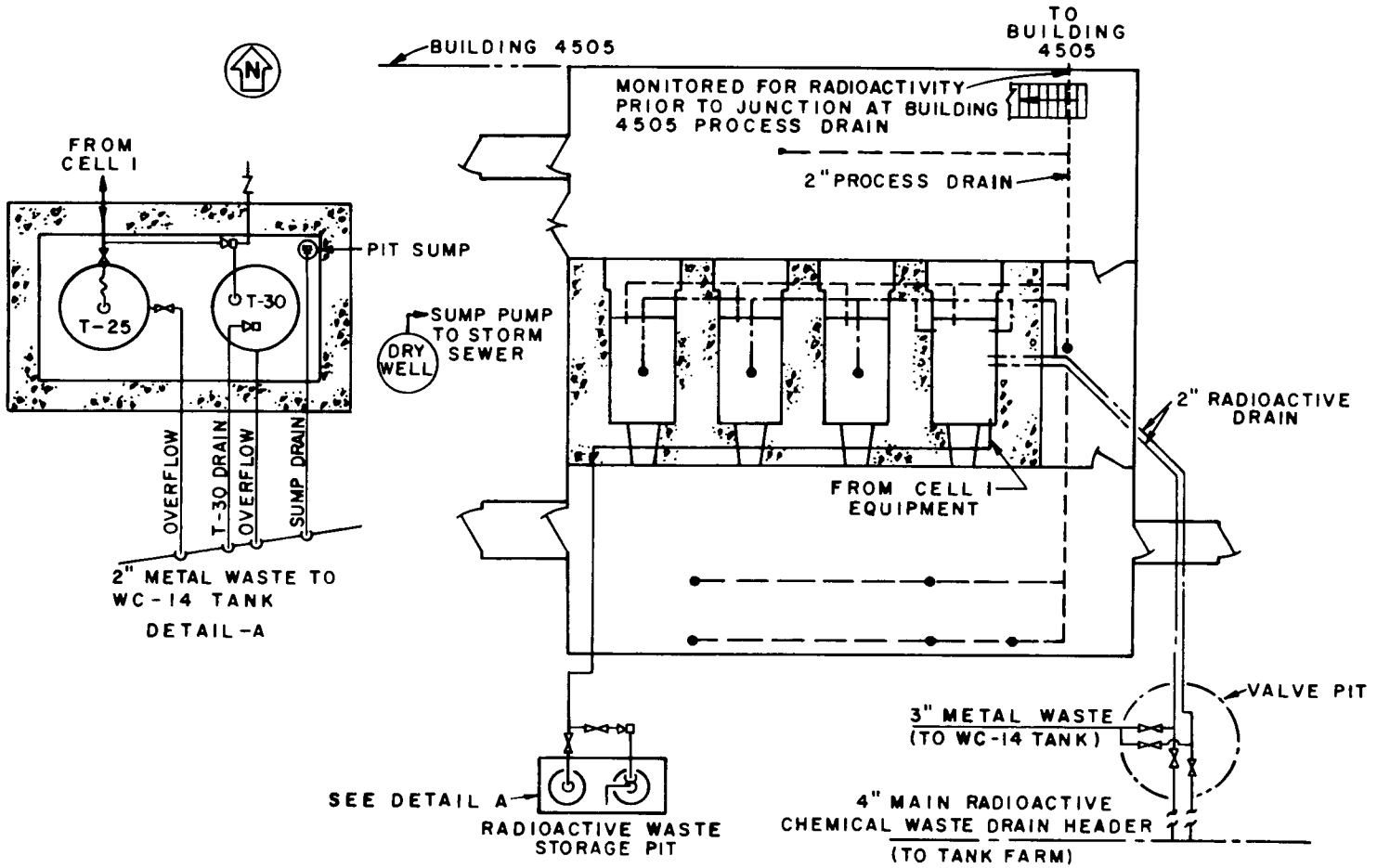

Fig. 8. Bldg. 4507 Liquid Waste Systems.

checked by sampling and discharged to the process drain of Cell 4. The cooling water from that cell was routed to a monitoring station located on the roof of Cell 4 and then discharged to the process drain. A leak of activity into this system automatically diverted the stream to the hot drain and sounded an alarm on the instrument panel in the Operating Area.

8.2 Radioactive Waste System

Liquid radioactive wastes are collected by two 2-in. headers (Fig. 8) which leave the east side of Bldg. 4507 and turn south to connect with the main 4-in. header between Bldg. 4500 and the Liquid Radioactive Waste Tank Farm. Diversion valves intercept the waste lines outside of Bldg. 4507. One line, formerly connected to the Cell 1 IMMI system, serves the table drains and Cave sink drain in Cell 1, while the other line serves the Pit Sump jet of Cell 1 and drains from the other 3 cells. Each cell is provided with a floor sump or scupper having a screened steam or water jet which discharges to the radioactive hot drain (RHD) system. These jet discharge lines are isolated (as recommended)[a] from the RHD system by remote-operated valves; this serves to prevent cross-contamination between cells during jetting or in the event of a stoppage in the RHD system. Elevated hot drains in each cell also discharge to the RHD system.

Typical high-level wastes from a single experiment with long-cooled LMFBR fuels may consist directly of about 500-ml of 4-6 M HNO_3 containing

---

[a]Hot Cells and Sources Committee, Review of Curium Recovery Facility (Bldg. 4507), CF-64-11-20 (Nov. 9, 1964).

up to about 8 g of uranium plus plutonium and about 60 Ci of mixed fission products.[a] Wastes from short-cooled (30-60 days) LMFBR experiments may contain about the same quantity of uranium plus plutonium and about 75 Ci of mixed fission products.[b] HTGR wastes are similar in character and volume, except that thorium replaced the plutonium in the fuel. Isotopic dilutions required for criticality control (Sect. 3.0) will increase the actual volume of high-level wastes.

Intermediate level wastes, such as 0.1 M HNO_3--0.05 M $Hg(NO_3)_2$ or 1 M NaOH scrubber solutions may amount to 16 liters or more per experiment, and contain no uranium or plutonium but from 1 μCi to as much as 10 mCi of ^{131}I/ml.

Up to 1 liter/week of organic wastes may be discharged to the RHD system. Larger quantities will be buried according to Section 5.2 of the Health Physics Manual.

8.3 Diversion Valve Pit for Radioactive Waste System

As outlined above, liquid radioactive wastes are collected by two 2-in. headers emerging from the east side of Building 4507 and turning south to connect with a 4-in. header, the so-called Chemical Waste Line, tying Building 4500 to the Liquid Radioactive Waste Tank Farm. The two 2-in. headers are intercepted by a valve pit located outside and adjacent to the southeast corner of Building 4507. One of the headers serves the entire bank of four cells; the other serves Cell 1 only.

---

[a]Based on analyses from LMFBR Run FR-118.

[b]Based on analyses from LMFBR Run FR-99.

Both lines are valved such that liquid waste can be routed directly south to the 4-in. header leading to the Tank Farm; or the liquid waste, if especially "hot", can be routed to a new 2-in. header, the so-called Metal Waste Line, leading west to WC-14, an underground tank for segregation and retention of such waste.

The valving arrangement and routing of these waste lines is diagrammed on the valve pit cover. The valves are fitted with extension handles through the cover, and are capped and locked to prevent tampering with the valve positions. Permission to change the valving arrangement must be obtained from building supervision. Drawings D-34263R1 and D-34264R1 describe the construction and piping arrangements in the valve pit.

8.4 Bldg. 4556 Radioactive Waste Drain

A 1-1/2-in.-diam stainless steel drain has been installed to serve the cell ventilation duct, filter housings, and fans in Bldg. 4556. This line, normally valved closed, runs southward underground from the southwest corner of Bldg. 4556 to intersect the main 4-in.-diam header to Waste Tank WC-11 near Bldg. 4508.

9.0 GASEOUS WASTES

9.1 Vessel Off-Gas System

A 2-in. stainless steel header provides vessel off-gas service for all four cells. Each cell must provide its own scrubber and filter through which the vessel off-gas must pass before entering the header.

The vessel off-gas system is instrumented to sound an alarm when the relative pressure in the header increases or drops below the desired 2 in. of water, negative. Normal gas flow in the header is estimated as less than 10 scfm.

The 2-in. header emerges underground from the east side of Building 4507 through a locked valve, and connects with the main 12-in. header from Building 4500. This line goes to the 3039 stack area, where the vessel off-gas is passed through a caustic scrubber installation, is filtered and monitored, and is then discharged to the stack.

9.2 Building Vacuum System

A local steam jet condenser system supplies vacuum to each of the cells (Appendix F). Connections within any cell must be provided with local traps and roughing filters to prevent radioactive particulates or liquids from entering lines leading to the vacuum system.

10.0 CELL VENTILATION SYSTEM

10.1 Bldg. 4556 Filter Pit

The cell ventilation system was partially described in Section 2.2, Building Containment. Building 4556 (Figs. 9-11), an underground structure located about 60 feet west of Bldg. 4507, intercepts the 30-in.-diam concrete cell off-gas (COG) duct before its junction with the main 4501-4505 duct near Fifth Street. The building contains 2 banks of filters in stainless steel housings, two 5-hp blowers (1 in standby) each having a capacity of about 3,800 cfm at 6 in. water and

ORNL DWG 73-8619

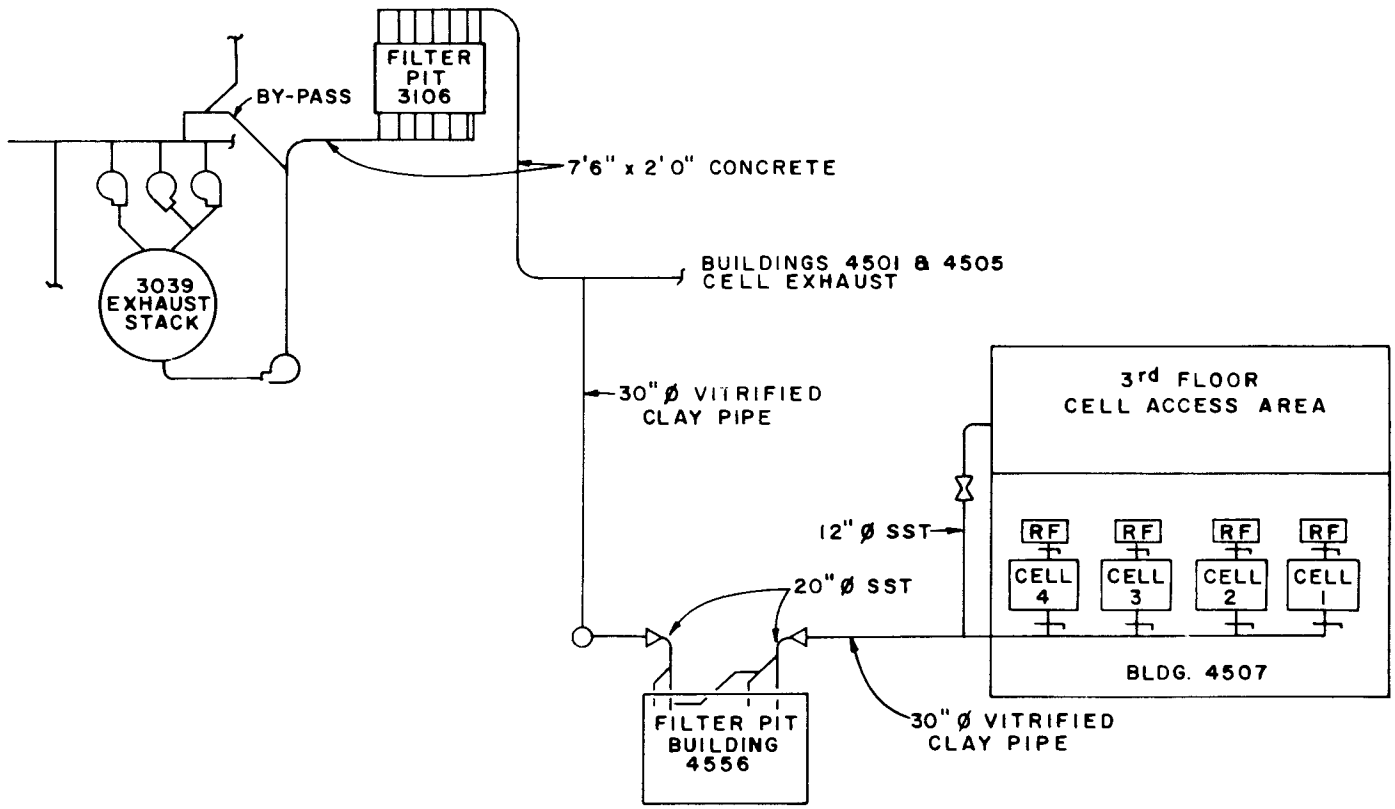

Fig. 9. Schematic Cell Ventilation System, Bldg. 4507.

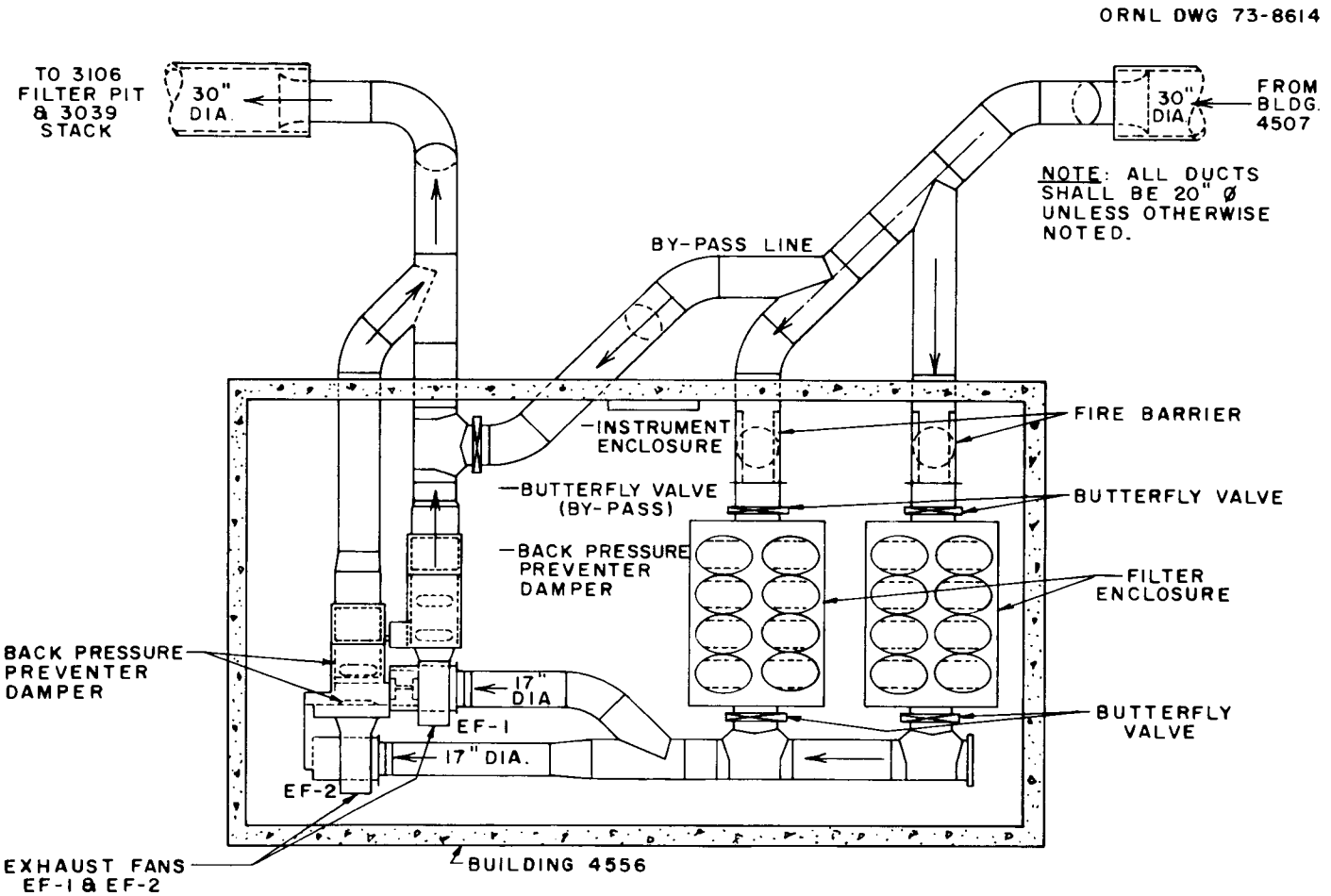

Fig. 10. Bldg. 4556 Filter Pit Layout.

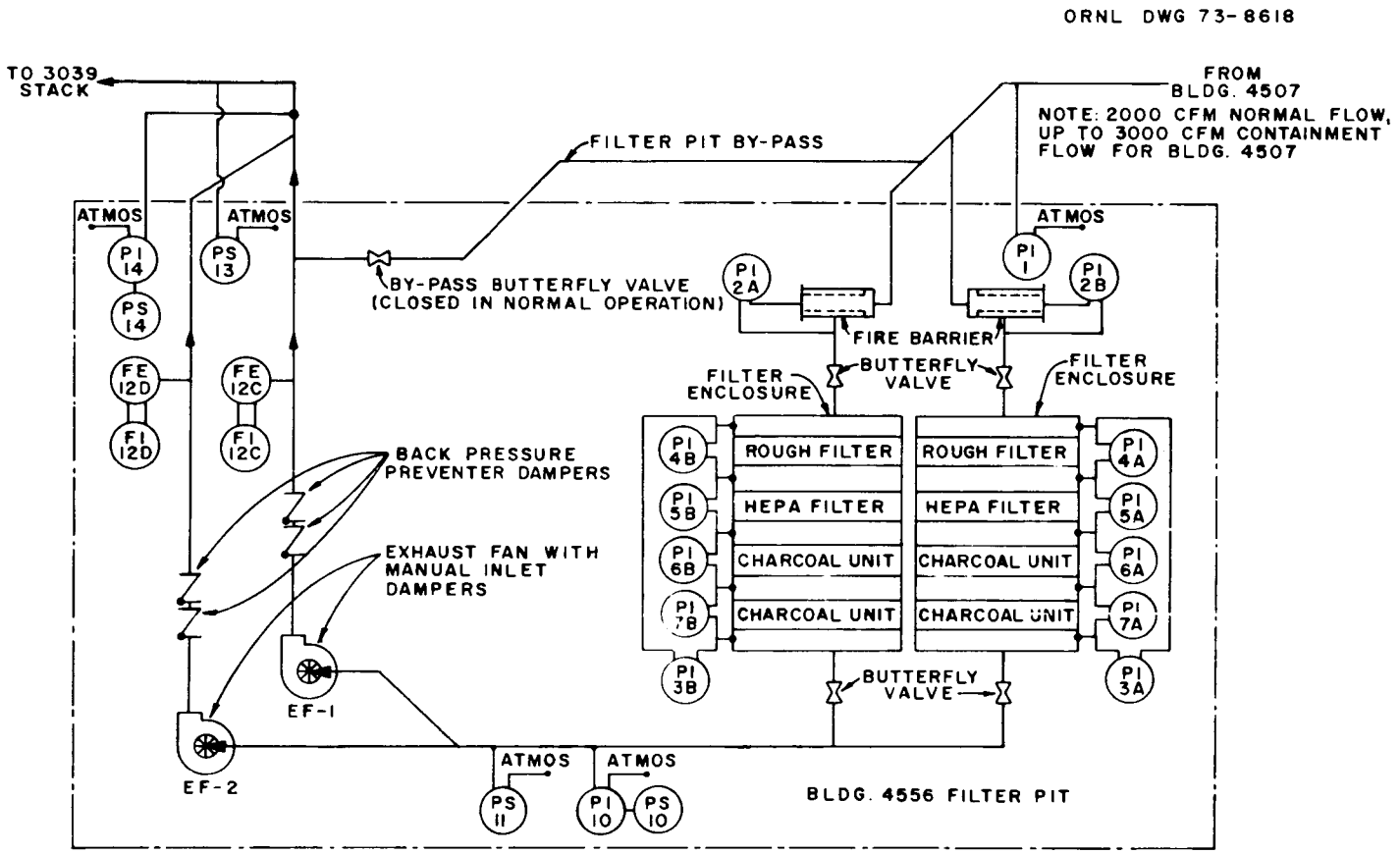

Fig. 11. Bldg. 4556 Schematic Flowsheet.

a by-pass system for emergency use. Each instrumented bank of filters has provisions for 1 roughing filter, 1 HEPA filter, and 2 charcoal filters. The filter banks are protected on the inlet ends by a fire barrier in the stainless steel duct. Valves permit isolation of either bank of filters for filter changes; normal bagging techniques are used for filter changes.

The fan instrumentation is so arranged that:

a. If the operating fan suction (detected by PS-10 and PS-11, Fig. 11) drops due to motor or fan failure, the standby fan automatically starts and an alarm is signalled in 4507 and at 3105.

b. If the vacuum in the fan discharge duct (detected by PS-13 and PS-14, Fig. 11) drops, i.e., if the duct is pressurized due to malfunction at the 3039 stack, both fans stop and an alarm is signalled in 4507 and at 3105. The fans must be restarted manually with a relay which resets PS-13/-14 when the vacuum in the duct has been restored.

The blowers automatically switch to the emergency power system in the event of failure of the normal 4507 power supply. If all electric power fails, a filter bypass valve must be opened manually. This permits the cell ventilation air to be exhausted by the auxiliary steam system at the 3039 stack with one line of filtration at Bldg. 3106. A remote alarm at 3105 alerts the Shift Patrol that the 4556 fans are not operating, and that the fans must be restarted or the bypass opened.

The cell ventilation system filters are routinely (semi-annually) tested with di-octyl phthalate (DOP) and the results reported by the

Inspection Engineering Department. Filters are changed when the pressure drop becomes too great or if the efficiency is $\leq$99.95%. Normal bagging procedures are used for the changes.

Radiation is not expected to be a problem during filter changes. Smears and probes were taken inside the 30-in.-diam concrete duct when sections were removed for the installation of Bldg. 4556; beta-gamma probes of only 3-4 mR/hr and alpha probes of <3000 dpm were found. The duct had been in use for over 14 years. The Health Physics representative in Bldg. 4507 makes routine weekly determinations of the radioactivity on the filters in Bldg. 4556, and is present at all filter changes.

10.2 Cell Operation

Each hot cell and glove box in Bldg. 4507 is maintained at greater than -1.0-in. H_2O in relation to the Operating Area or Penthouse. Air enters the cells through "Duststop" roughing filters and through HEPA filters; backflow preventers in the rear door ducts protect the inlet area from pressurizations within the cells. (Cells 3 and 4, the old Curium Recovery Facility, also have two 145-cfm HEPA filters in the alpha shield bulkheads inside the shielding door and two HEPA filters at the cell exhaust duct openings. The exit filters were rendered unnecessary when Bldg. 4556 filter pit was installed.)

Visible and audible alarms at the central panelboard in the Operating Area signal whenever the vacuum in any cell falls to less than -0.75-in. H_2O. Other alarms indicate loss of vacuum in any area throughout the building.

11.0 SOLID WASTES

11.1 High-Level Solid Waste

Routine high-level solid wastes from operations in Bldg. 4507 may be of three types: alpha, beta-gamma, and alpha-beta-gamma. Purely alpha-active wastes from cell, glove box, or cave operations are removed via bag ports and then doubly-contained in plastic and a metal can or box. Beta-gamma or alpha-beta-gamma wastes are withdrawn from the cells or cave into shielded containers for transfer to the Solid Waste Storage Area (Burial Ground). Radiation readings of up to 500 mr/hr at the surface of the casks are permitted; all casks must be bagged in plastic prior to removal from the Penthouse, and bear a properly executed Material Transfer Tag (UCN-2785) and Authorization for Storage of Radioactive Material (UCN-2822) form. Applied Health Physics personnel will monitor waste removal operations and promptly survey the area for contamination upon completion of the work. Operating personnel will promptly clean contaminated areas and/or casks. Casks of waste are handled by P and E rigger personnel (phone 3-6356).

11.2 Low-Level Solid Waste

Low-level and/or potentially contaminated wastes, such as blotter paper, cheesecloth, shoe covers, plastic film, rubber gloves, tools, etc. will be temporarily stored in plastic bag-lined yellow "hot cans." Hot cans will be emptied into the Yellow (hot) Dumpster on a regular basis; the bag liners will be twisted and taped or heat-sealed before removal from the contamination zone. When the Yellow Dumpster is filled,

the Dumpster will be monitored and tagged (UCN-2785) by Health Physics and a Waste Storage Authorization Form (UCN-2822) completed by operating personnel. The Dumpster will be moved by calling 3-6356.

11.3 Large-Scale Decontamination Operations

Large-scale decontamination operations will be conducted in such a manner that exposures to personnel will not exceed the permissible quarterly dose of ionizing radiation. Remote decontamination procedures must be utilized to reduce radiation levels to a reasonable limit before personnel may enter the radiation-contamination zones. Daily Radiation Work Permits (RWP), Form UCN-2779, will specify clothing requirements, working-time limitations, monitoring, etc., for each job, and will be approved by Health Physics and appropriate line supervision.

Some form of double-containment for the cells or glove boxes will be provided before they are opened. Vestibules and plastic tents are recommended; these provide zones which limit the spread of contamination through changes of clothing, bagging or containment of articles, and proper monitoring for contamination at zone boundaries. Proper air flow patterns and balances will be maintained.

Contaminated clothing and gas masks will be bagged and individually monitored and tagged by Health Physics before they are returned to the Decontamination Laundry or Industrial Safety Departments for cleaning. Wastes generated by the decontamination operation will be doubly-contained in plastic and/or other containers before disposal in the Yellow (hot) Dumpster, Yellow (hot) Truck, or lead-lined Dumpster.

Completed transfer tags (UCN-2785) and Waste Storage Authorization Forms (UCN-2822) will accompany each shipment.

12.0 PROCESS HAZARDS

12.1 Gas Formation Leading to Pressure Conditions or Explosion Hazard

12.1.1 Hydrogen Formation in Sulfex Process

The dissolution of stainless steel cladding in 6-8 M H_2SO_4 (Sulfex Process) generates hydrogen gas. A 1960 study on the safety and disposal by Sulfex hydrogen by Holmes et al.[a] recommended that an air-tight dissolver vessel be purged of oxygen with nitrogen prior to start-up, and then that the hydrogen concentration be kept at less than 4.1% (the minimum flammable concentration) by dilution with inert gases, air, or steam.

Sectioned LMFBR fuel rods contain an average of 20 wt % stainless steel cladding. According to the reaction:

$$Fe + H_2SO_4 \rightarrow H_2 + FeSO_4$$

and the data of Rom from the original (1960) 4507 Hazards Evaluation,[b] it can be calculated that a typical 10-g experimental batch of LMFBR fuel segments (i.e., 2-g cladding) would require a purge gas flow of 208 cc/min to dilute the hydrogen concentration to 3% during the initial peak evolution rate; smaller flows would be required thereafter.

---

[a] J. M. Holmes et al., Proposed Hydrogen Safety and Disposal Procedures for the PRFR Pilot Plant," ORNL-CF-60-1-124 (April 4, 1960).

[b] A. M. Rom, Bldg. 4507, High Level Chemical Development Facility, Hazards Evaluation, Vol. 10, ORNL-CF-60-5-25 (May 20, 1960).

12.1.2 Hydrogen Formation During Dissolution of TRU Aluminum Targets[a]

Approximately 125 STP liters of hydrogen gas was generated in the dissolution process for each 100 grams of aluminum dissolved. At a dissolution rate of 1 g/min, the hydrogen was generated at about 1 liter/minute. The hydrogen was diluted continuously with 2 ft^3/min (56 liter/min) air, giving a concentration of hydrogen in the air of about 2.2%, or less than the 4.1% minimum flammable concentration.

12.1.3 Solvent Vapors

Cells 1 and 2. - Small quantities (1 liter or less) of 15 to 30 vol % n-tributyl phosphate in n-dodecane diluent may be used in Cells 1 and 2 for batch tests of solvent extraction flowsheets. Another possible diluent could be Amsco 125-82. The closed cup flash point for Amsco 125-82 is 128°F, and for n-dodecane is 165°F. The lower flammable limits in air are reported to be 0.7 vol % for Amsco and 0.6 vol % for n-dodecane. The probability of solvent fire or explosion in the cell is not considered very likely since the low vapor pressure of diluent at room temperature and the small quantity of solvent used in the batch mixers does not permit an explosive concentration to develop in the 600 scfm cell ventilation system.

Cells 3 and 4. - Explosions or fires due to solvent vapors were possible only in a few process vessels in Cells 3 and 4; it was not possible that an explosive concentration could occur in a significant fraction of the volume of a cell since the temperature of the cells was

---

[a]Hot Cells and Sources Committee, Review of Curium Recovery Facility (Bldg. 4507), ORNL-CF-64-11-20 (Nov. 9, 1964).

well below the flash point of the solvent (Alamine-336 in diethyl benzene) (70-80°C) and the cell ventilation rate was sufficient to dilute vapors to below the minimum flammable concentration.

An explosion was possible in mixer-settlers only if temperature control was lost and there was a source of ignition. The mixer-settlers were normally maintained at ∿50°C while the flash point of the solvent was 70-80°C. If an explosion was to have occurred in the vapor space of a mixer settler, shock waves at the cell walls and window would have been less than those from the equivalent of 3 lbs TNT (the cell is designed to withstand the blast effects of 3 lbs TNT without gross breach of containment). The gas pressure in the cell would not have risen above atmospheric.

12.1.4 Sodium or NaK Handling

LMFBR irradiation capsules normally contain about 50-60 g of NaK-44 coolant in the annulus between the 0.25-in.-OD fuel rods and the 0.50-in.-OD stainless steel or Zircaloy outer capsule. This NaK is usually removed and reacted by Operations Division personnel before the cleaned fuel rods are delivered to Bldg. 4507. Copies of those procedures are included in Appendix D; these will be followed if intact irradiation capsules or other NaK or sodium-containing items are brought to Bldg. 4507. In brief, excess flammable materials are removed from the cell, all water supply valves are tagged "Do Not Operate," extra pans and trays are provided to work in, and NaK fire fighting materials are kept close-at-hand in the cell.

12.2 Fires

Fires within a cell may be extremely hazardous since they could conceivably raise the cell pressure and temperature and disperse radioactive material as smoke. A temperature sensor, mounted at the roof of each cell, sounds an alarm in the operating area and at the ORNL Gamewell master control panel if the temperature in any cell exceeds 165°F. In the event of a temperature alarm a manually operated water sprinkler head in the cells may be actuated at the discretion of operating personnel or firemen. The volume of water will thus be limited to the minimum for fire extinguishment. The cell sprinkler heads are not automatically actuated since water from an uncontrolled release cannot be removed conveniently from the cells.

Fires in the operating area, charging area, and penthouse would not cause a serious radiation hazard because these areas are protected by automatic water sprinkler systems and will contain relatively little radioactive material in a dispersible form.

The consequences of the worst credible fire in one of the Bldg. 4507 cells have been discussed by Vaughen, Peishel, et al., in the 1963 and 1964 Hazard Evaluations for Processing Transuranium Elements in the Curium Recovery Facility (Bldg. 4507). As a worst case, they assumed that radioactive solvent that might burn would be no more than the equivalent of 0.5 liters of solvent containing actinides and fission products at a concentration of 10 watts/liter (0.6 g ^{243}Am, 0.8 g ^{244}Cm, and 700 curies rare earth fission products). No more than 1% of the radioactive smoke (0.01 to 1 μ in size) was expected to pass through

the ventilation ducts and high efficiency filters and be exhausted through the ORNL 3039 stack. This release would have caused maximum downwind personnel doses from inhalation of less than 1 rem. No more than 35 square miles of ground downwind from the stack would have been contaminated to levels greater than 1000 d/min-dm^2 of beta-gamma and 30 d/min-dm^2 of alpha, even in the event of worst possible conditions for optimum rainout. Since that time the Bldg. 4556 filter system has been installed, thus limiting the release to the 3039 stack to only trace quantities.

The consequences of a solvent fire in Cell 1 or Cell 2, involving batch tests of HTGR or LMFBR solvent extraction flowsheets, would be less severe than those calculated for a fire in the Curium Recovery Facility since only about 0.1 liter of solvent and only about 180 Ci of fission products and heavy metals would be involved. [The LMFBR solvent extraction flowsheet specifies 2.1 volumes of 15% TBP--85% n-dodecane solvent per volume of feed; 50 ml of feed solution would contain 3.5 g U + Pu and 51 Ci total fission products per gram of U + Pu (Appendix E).]

Liquid metal fires caused by spilling NaK or sodium within a cell should cause little problem or hazard since unnecessary flammable materials are removed from the cell and the manipulator boots are kept away. The liquid metal handling procedures and safeguards outlined in Appendix D must be followed.

12.3 Explosions

Chattin, Vaughen, and others[a,b,c] have calculated the effects of a hydrogen-air explosion[d] in the dissolver tank for the hazard analysis of the Curium Recovery Facility:

"The effect of a hydrogen-air explosion in the vapor space of the dissolver or other process tankage would be to shatter the tank and generate a radioactive liquid aerosol in the cell air. The volume of H_2-air mixture that might be involved in an explosion would not exceed 10 cu ft. Explosion of 10 cu ft of H_2-air mixture would cause the cell pressure to rise instantaneously to approximately 60 in. w.g. above atmospheric but the capacity of the ventilation system is such that the cell pressure would return to less than atmospheric pressure in approximately 1 second. Such an explosion would generate shock waves less energetic than those from 3 lb TNT, which the cell may withstand without gross breach of containment."

"Using the methods of ORNL-3441, the quantity of radioactive liquid aerosol released through the in-cell filters to the 3039 stack would be that equivalent to one cell volume of air at an aerosol concentration of 0.14 mg/m^3 of air. Assuming that the liquid in the aerosol is at the

---

[a] F. R. Chattin et al., Safety and Radiation Control Procedures for Curium Recovery Facility (Bldg. 4507), ORNL-CF-65-7-69 (July 1965).

[b] V. C. A. Vaughen, Draft of Hazard Evaluation for Processing Transuranium Elements in Curium Recovery Facility (Bldg. 4507), (October 1964).

[c] F. L. Peishel, Hazard Evaluation for Processing Transuranium Elements in Cell 4, Bldg. 4507, CF-63-7-50 (July 1963).

[d] Energy Release for hydrogen = 57.78 kcal/mole H_2 (10.24 BTu/liter).

initial solution concentration (10 watts/liter), the radioactivity release to the environment would be 4×10^{-6} g ^{244}Cm and 3.6×10^{-3} curies of fission products. This release would cause maximum downwind doses not exceeding 1 mrem and no more than 0.02 square miles downwind contaminated above 1000 d/min-dm^2 of β-γ and 30 d/min-dm^2 of α."

12.4 Loss of Containment Through Ventilation Failure

Building 4507 depends on the Bldg. 4556 fan house and the ORNL COG system for its ventilation. A test of the over-all plant containment system demonstrated the capability of the containment features of Building 4507 under normal duct vacuum and under reduced duct vacuum (steam jenny operation). Should both the normal and standby systems fail, some slight draft would still be obtained from the 3039 stack by opening the manual bypass valve in Bldg. 4556. It is then necessary to put the building into containment, seal the cell air intakes on all hot cells (glove boxes included) and close any cell access or penetrations for the duration of low COG duct vacuum.

VOG duct failures are less hazardous; however, steps should be taken to minimize air flow into the tanks if the VOG system suffers a breakdown.

12.5 Other Credible Accidents

12.5.1 Spills

It is possible to slightly contaminate some areas of the Penthouse if a glove box glove or bag ruptures, or when loading or unloading shielded casks if the outside of the containers of radioactive material

or the interiors of the casks are highly contaminated. Torn gloves or bags must be replaced. The containers of radioactive materials must be closed with some type of lid, the outsides kept as clean as possible with bags, and blotting paper or plastic sheet used to protect the floor in the work areas. Health Physics surveillance and monitoring is required, and contaminated areas should be cleaned immediately. Due care must be used to align holes in the casks and the cell block to prevent hang-ups of containers. Lids of containers must be firmly attached to prevent loss of contents. Casks and other equipment should be cleaned as often as necessary to prevent the spread of contamination.

Since the Penthouse is within the containment shell of 4507, little or no contamination of the environment would occur if a spill took place. Prior experience has shown that a few thousand dpm of radioactive contamination can be easily cleaned with cheesecloth and detergent solution.

12.5.2 Personnel Errors

The greatest personnel error hazard in Bldg. 4507 is considered to be breaching or otherwise rupturing the Curium Recovery Facility Maintenance Box in the Penthouse. Residual plutonium, americium, and curium contamination levels are presumed to be very high inside the boxes, and a rupture has the potential of exposing personnel in the Penthouse to those materials. Great care must be used when handling casks or other massive objects with the gantry crane in the vicinity of the box so that a break does not occur. The reduced pressure in the

cells below the box will keep air flowing into the boxes, but eddy currents could allow some contamination to escape into the Penthouse, the secondary containment zone. In the event of cracked glass, torn glove, or small break, the personnel involved should follow the procedures in Section 5.3. Notify supervision and Health Physics at once.

In the event of a large rupture of the box, personnel will immediately notify supervision, put the building into the containment condition, and evacuate other persons by actuating the red Manual Evacuation/Containment switch in the southwest corner of the Penthouse. Leave the Penthouse, and wait in the Penthouse vestibules for Health Physics to monitor them for contamination. They may then proceed down the outside stairways to the emergency assembly point in the 4500N passageway. Standard emergency procedures for re-entry into the building will then be followed.

12.6 Maximum Credible Accident

The maximum credible accident in Bldg. 4507 would involve the release of fuel and fission products from highly irradiated LMFBR fuel rods containing 25% PuO_2--75% UO_2 fuel pellets clad in stainless steel. (Appendix E-1 summarizes ORIGEN calculations of the fission product content of 1 ton of the most highly irradiated fuel to be used in 4507.) Laboratory development operations in 4507 usually involve the handling of a maximum of 2 fuel rods of 25.5 g of irradiated uranium and plutonium. The total quantity of radionuclides in 2 rods is listed in Table 9.

Table 9. Radionuclide Content of Two Irradiated LMFBR Fuel Rods (100,000 MWd/ton, 25.5 g U + Pu, decay shown)

	30 days decay	90 days decay	180 days decay
Heavy Metals	31.875	30.345	29.070
All Fission Products	1300.500	711.500	425.850
Total	1332.375	741.845	455.920

The maximum release, which is not credible, would involve the vaporization of all of the fuel and all of the fission products from two 30-day-cooled fuel rods which had been sheared into short lengths, or 1332.375 Ci. If all of this vaporized material was carried by the cell ventilation to the Bldg. 4556 HEPA filters, essentially only the rare gases xenon and krypton would pass on to the main 3106 filter house and the 3039 stack. The ORNL HEPA filter system Test Report No. 2456 (August 8, 1972) showed that the 4556 filters operated at a minimum efficiency of 99.998%; in such a case 6.465 Ci of Xe + Kr and 0.027 Ci of other fission products would be released to the duct leading to the 3106 filter house. If the 4556 filters operated at the minimum acceptable efficiency (99.95%), 9.796 Ci (6.465 Ci Xe + Kr and 0.68 Ci others) would be released to the duct. This would be refiltered at 3106, releasing only the rare gases.

An improbable accidental release, involving two 30-day-cooled LMFBR fuel rods, could be as follows:

1. The cladding of the two fuel rods split or ruptured during irradiation, and the plenums of the rods were unknowingly filled with NaK from the outer capsule. If the Fibrafax insulation in the plenums was also omitted during fabrication of both of the rods, a maximum of 3.176 cm^3 (2.773 g of NaK-44) could enter the empty plenum. (It is improbable that rupture of the rods would not be detected during post-irradiation examination since fission gases Xe-Kr would appear in the cover gas samples from the outer capsule, and there would be little or no fission gas in the samples from the rods.)
2. The NaK-filled rods are then cut into short lengths with the hydraulic shear, intimately mixing the fuel, cladding, and NaK. Exposure to air allows the NaK to ignite, and, for the sake of the accident, the fire is permitted to burn without extinguishment.
3. The initial total radionuclide content of the two rods would be:

Heavy Metals (25.5 g)	31.875 Ci
Kr	0.472
Xe	5.993
I	38.250
Ru	200.430
Cs	11.271
All other fission products	1044.084
	1332.375 Ci

4. Fission gas sampling at 3525 before shearing would remove at least 75% of the xenon and krypton (4.849 Ci), leaving 1.616 Ci in the fuel.

5. The postulated fire would probably volatilize a maximum of:

100% of the Xe-Kr	1.616 Ci
50% of the Cs	5.636
100% of the I	38.250
50% of the Ru	100.430
1% of the others	10.441
1% of heavy metals	0.319
	156.692 Ci

6. In all cases, the 1.616 Ci of Xe-Kr would pass through the 4556 and 3106 filters and be released via the 3039 stack.

7. If all of the volatilized radionuclides passed through the ventilation ducts to 4556 without settling, and if the 4556 filters operated at 99.998% efficiency, only 1.616 Ci of Xe-Kr and 0.0031 Ci of fission products and heavy metals would pass through 4556 to the 3106 filter duct. This is not significant.

8. If the 4556 filters operated at 99.95% efficiency, only 1.616 Ci of Xe-Kr and 0.078 Ci of fission products and heavy metals would pass through to the 3106 filters. This is not significant.

A more credible accident envisioned for Bldg. 4507 involves the release of ^{131}I if the glass dissolver breaks during the dissolution of

30-day-cooled (U, Pu)O_2 pellets in nitric acid. A Pyrex glass dissolver and condenser are necessary to prevent sorption of iodine by metallic surfaces and in order to measure the corrosion of the stainless steel cladding around the fuel pellets. Under normal conditions, about 6 g of (U, Pu)O_2 is dissolved in 50 ml 8 M HNO_3 in a 125-ml Pyrex bottle on an electric hot plate. A 50 ml/min purge of air is used, after leak-testing the entire system, to carry the Xe-Kr fission gases through a condenser and countercurrent scrubber to a floating gas holder inside the cell (Fig. 12). All of the dissolution off-gases (6-16 liters) are collected for sampling, and are then discharged through a charcoal trap to the plant vessel off-gas system. Previous short-cooled tests with this equipment have shown that a decontamination factor (DF) for ^{131}I of greater than 6×10^4 is obtained across the scrubber column using the 0.1 M HNO_3--0.05 M $Hg(NO_3)_2$ scrub solution. The probability of failure of the stainless steel and heavy wall Pyrex pipe scrubber is slight, since the gas flow rate, the pump flow rate, and the collected volumes of the gas and scrub solutions are continuously monitored by the technicians operating the cell. Further, since the gas emerging from the scrubber is passed through a trap containing activated and iodized charcoal (for analytical purposes) and is then collected and held in the gas holder in the cell, the scrubber could completely fail to function and would still not release ^{131}I to the ventilation system.

In the case of this credible accident, we may assume that 6 g of the irradiated (U, Pu)O_2 contains 1.5 Ci of ^{131}I per gram of fuel, or

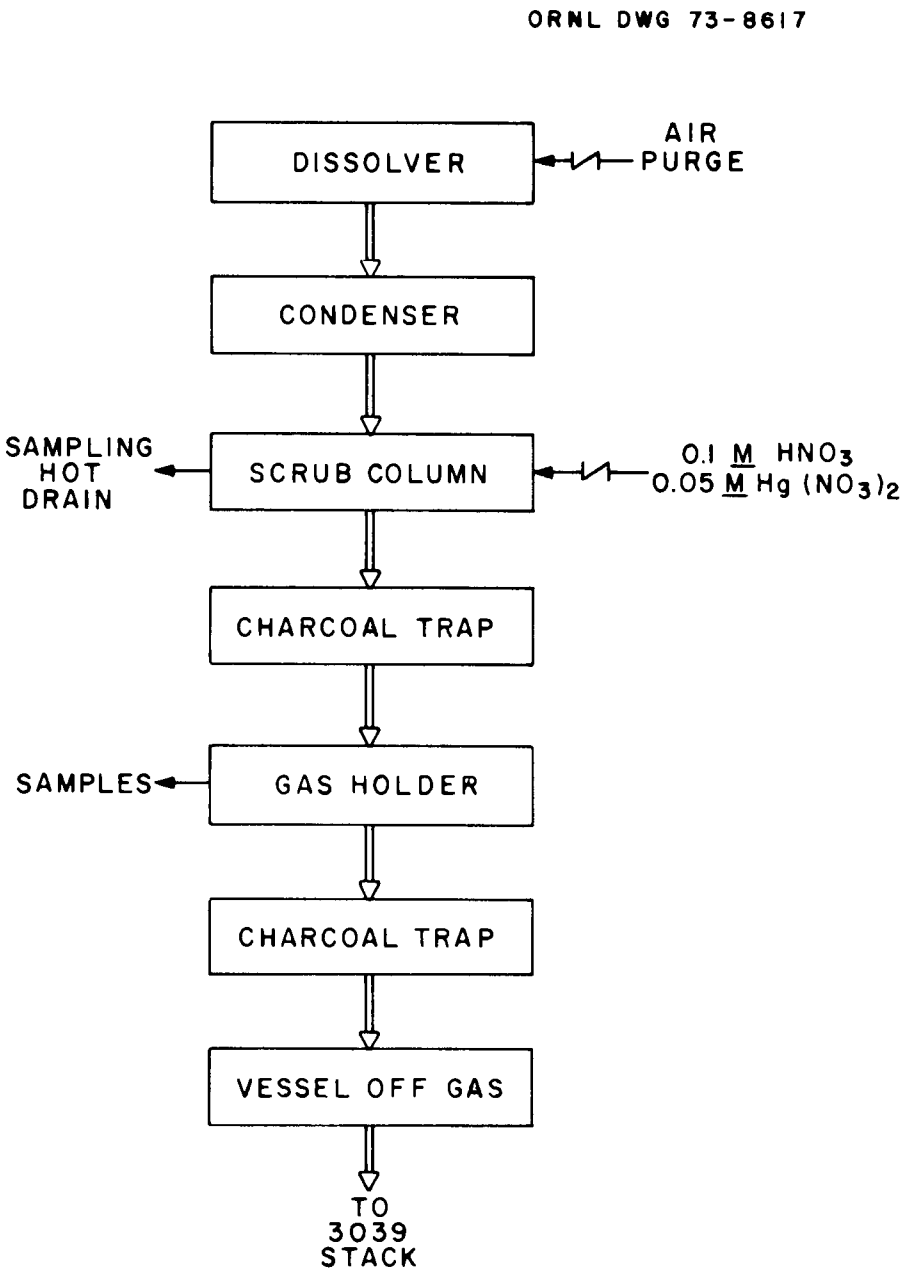

Fig. 12. Schematic Flowsheet Showing Off-Gas Treatment in LMFBR Fuel Processing Studies.

9.0 Ci. About 90% of the $(U, Pu)O_2$ would dissolve during the first 30 minutes, releasing about 8.1 Ci of ^{131}I—at a rate of 0.27 Ci/min—from the fuel. About 85% of the released ^{131}I (6.9 Ci) would volatilize and be carried to the scrubber at the rate of 0.23 Ci/min, leaving 1.2 Ci in the solution. If the dissolver broke completely during the reaction period, which is not likely because the heavy-wall Pyrex glass is annealed after fabrication, the 0.23 Ci of ^{131}I in the vapor space would be volatilized, and, while unlikely, a maximum of 1.2 Ci of ^{131}I could be possibly picked up by the cell ventilation air (∿600 cfm) and carried toward the Bldg. 4556 roughing and HEPA filters. Most, however, would remain in the liquid on the stainless steel tray in the cell. The spilled solution is absorbed in cheesecloth or paper tissues, and sealed in a waste container for burial along with the broken glass, etc. The tray is then washed clean with decontamination solution.

The release of ^{131}I to Bldg. 4556 is monitored at the point where the cell ventilation duct leaves Bldg. 4507. Continuous surveillance of the experiment is maintained at all times by the operating technicians. Charcoal filters in Bldg. 4556 should retain ^{131}I released from Bldg. 4507.

APPENDIX A

APPENDIX A: EMERGENCY PROCEDURES FOR BUILDING 4507

A-1: 4507 Emergency Evacuation Plan - Fire, Explosion, or Activity Release

If a continuous bell alarm or evacuation horn is heard:

1. Evacuate building by nearest exit.
2. As you leave, push red "Evacuate" button near your exit (Note location on building plan) to actuate building containment and sound evacuation horn audible throughout building. This will also summon Fire Department, Health Physics, Guards, and Laboratory Shift Supervisor.
3. Once outside, proceed to passageway connecting Building 4507 and Building 4500, Wing 1, the assembly point and emergency HP check station (Note location).
4. Remain at check station until surveyed and released by HP.
5. After assembly at check station, building supervisor or alternate will:
   a. Actuate building containment if not already done (Note location of outside "Evacuate" button).
   b. Actuate fire alarm box if not already done (Note location of outside box).
   c. Determine if everyone is out of the building and assembled.
   d. Hold assembled personnel at check station until aid arrives.

e. Appoint sentries for east and west ends of building to prevent unauthorized entry.

f. Appoint searcher and HP surveyor, dressed in protective clothing, to enter building and evacuate anyone remaining there.

7. Emergency equipment and protective clothing is stored in passageway between Building 4507 and 4500.

A-2: Other Emergencies

1. Emergencies requiring medical assistance, guards, etc., should be reported by telephone using the emergency telephone number posted beside each telephone (3-6358).

EMERGENCY TELEPHONE NUMBERS

Emergency Control Center	3-6358
Ambulance	3-6358
Fire	3-6358
Guard Headquarters	3-6646
Laboratory Shift Supervisor	3-6606
Health Physics	3-1692

2. Emergency Shutdown of Electrical Equipment. Each person responsible for the operation of any cell in the building shall determine the location of all cut-offs for building services supplying his cell with the assistance of the building supervisor, and shall inform his operating personnel of these locations by including them in his written procedures. Briefly, steam, water, air, and gas may be cut off in the Building 4505 cold tunnel; local electric power

at Power Panels X and Y (Fig. 13), and Lighting Panel "A" in the charging area; Lighting Panels "B" and "C" in operating area; vacuum in the Makeup Area. The main Building 4507 480 V, 3Ø electrical power shut-off is a labelled 400 amp circuit breaker located on a "Square D" panel in the Southeast sector of the basement of Building 4501, 15 ft NW of the double doors leading into the basement of Building 4505; it may be reached by going down the stairway at the east UNOP (4505) entrance, down the NE stairwell of 4501, or through the tunnel connecting 4500 and 4505. The main electrical (480 V, 3Ø) disconnect to the heater and lights in Building 4556 is on the east wall of the Charging Area next to containment horn controls; the Building 4556 ventilation fan normal and emergency power disconnects (2) are located on the south wall of the Operating Area near the Emergency Power Panel.

Power failure, shut-off of the main breaker in Building 4501, shut-off circuit 2 in Power Panel "Y" or circuits 11 and 12 in Lighting Panel "C" will cause the building to enter the "fail safe" containment condition.

3. Laboratory-Wide Evacuation. Shut down equipment and put building in containment. Evacuate as directed by P.A. system.

A-3: General Emergency Procedures

General emergency procedures are listed below. Specifically, the procedures are reinforced with competent and well-trained personnel, a technical supervisor for each shift, extensive HP coverage during the

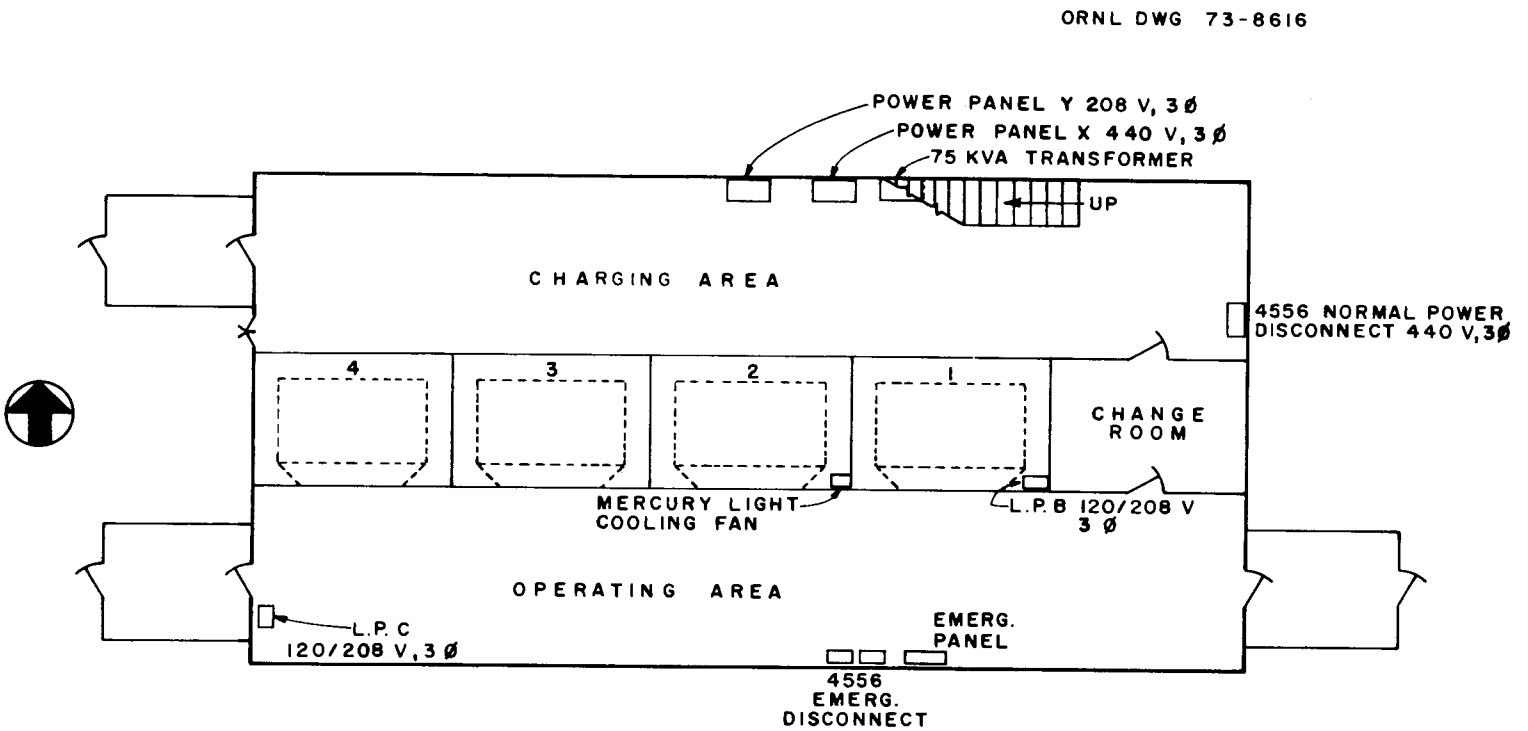

Fig. 13. Location of Electrical Supply Panels in Bldg. 4507.

startup period, and heavy investment in detection instruments and automatic controls. Fail-safe conditions are specified whenever they apply.

Every individual must be aware of the situation and be prepared to take immediate action at anytime to:

1. Minimize the hazard to personnel both within the plant area and within Building 4507.
2. Minimize the extent of the damage due to or resulting from the incident.

It is up to the building supervisor or the shift supervisor, in his absence, to determine the extent of the damage and the best course of action.

Certain procedures can be typical of emergencies within Bldg. 4507. These are listed below.

A-3.1. Loss of COG or VOG Duct Vacuum

Building 4507 depends on the Building 4556 blowers and on the plant COG system for all of its vacuum and ventilation. A test of the overall plant containment system demonstrated the capability of the containment features of Building 4507 under normal duct vacuum and under reduced duct vacuum (steam jenny operation). Should both the normal and standby systems fail some slight draft would still be obtained from the 3039 stack at the Isotopes Area. It is necessary to put the building into containment, seal the cell air intakes on all hot cells (glove boxes included), open the manual by-pass in Building 4556, and stop any cell access or penetrations for the duration of low COG duct vacuum.

VOG duct failures are less hazardous; however, steps should be taken to minimize air flow into the tanks if the VOG system suffers a breakdown.

Loss of COG or VOG Duct Vacuum Emergency Check List

Loss of COG

1. Put the building into containment.
2. Seal the cell air intakes on all hot cell (glove boxes included).
3. Stop any cell access or penetrations.
4. Open manual by-pass in Building 4556.
5. Evacuate the building unless critical shutdown procedures are in effect.
6. Reentry procedures is on p. 86 and 87.

VOG failures are less hazardous; minimize air flow into the tanks if the VOG system suffers a breakdown.

A-3.2. Loss of Normal Electrical Power

A loss of electrical power for Building 4507 will cause the building to enter the "fail safe" containment condition. Specifically, shutoff of the main breaker in Building 4501 basement, shutoff of circuit 2 in power panel "Y" (Charging Area, 4507) or circuits 11 and 12 in Lighting Panel "C" (Operating Area 4507) will cause this containment condition.

There are several effects that are likely to accompany a general power failure (e.g., power outage due to severe electrical storm) in addition to the building being put into containment. These include

numerous HP instrument alarms and alarm conditions for the telealarm systems or knockout of the telealarm relays used for all building vacuum and process alarms. All electrical process equipment will of course be off, forcing shutdown of all process operations immediately. Lapp pumps and circulating pumps using panelboard switches would remain off when power was restored. A containment condition caused by a power failure should initially be treated as one caused by an activity release unless the COG and VOG are operating properly. (The Building 4556 blowers are designed to switch to emergency power in case of failure of the normal system.) The normal procedure would be to quickly examine the cell pressure panelboard to determine that the COG duct vacuum is greater than 1 in. w.g. vacuum and that the VOG controllers in cells 1, 3, 4 were operating properly. If all is in order, then the hazard to personnel is minimal and immediate steps should be taken to minimize the hazard to the process and equipment. Cell vacuums may be temporarily boosted at the expense of the building by partially blocking the absolute filters on the back cell doors.

If both the COG (Building 4556 and 3039 stack) and VOG systems fail, then the hazard potential to personnel is great, and personnel should manually put 4507 into containment and immediately evacuate the building. Reentry should be made by a searcher, with normal reentry precautions, to check if the building off-gas systems are functioning properly on the normal or emergency off-gas system. If the COG and/or VOG systems are not operating satisfactorily the cell vacuums should be boosted by sealing the air intake filters on the doors and on the

penthouse glove boxes. The filter bypass valve in Building 4556 should be opened manually to increase the available vacuum. All process and building alarms should then be cleared, if possible, all HP instruments reset, and all electrical process equipment should be turned off. The personnel making the building entry will be charged with deciding whether there are any additional potential hazards caused by the power outage and forced shutdown that can be alleviated by further activities in the building at that time. If not, the building should remain empty and in containment until electrical power is restored.

Reentry should be made cautiously and with aid of HP when power is restored. As soon as building is cleared for normal activities, the building can be taken out of containment by pushing the containment reset button and starting the penthouse exhaust fan (only for summer operation and the Cell 1-2 mercury light cooling fan). A systematic checkout should be begun to find faulty telealarm relays, burned out bulbs, blown fuses, kicked out heaters, etc. Normal process operations should not be resumed until this checkout is complete.

Loss of Electrical Power to Building 4507 Checklist

1. A loss of electrical power will cause the building to go into containment.
2. Examine cell pressure panelboard to determine that the COG duct vacuum was greater than 1 in. W.G. vacuum and that VOG controllers in cells are operating properly. If the panelboard indicates that the VOG and COG are operating properly then proceed to item 3. If the COG and VOG systems fail see "Loss of COG or VOG Duct Vacuum."

3. Turn off all electrical process equipment.
4. Close bottom valves under head tanks in Makeup Area to prevent syphoning.
5. Reset all HP instruments; clear all process and building alarms if possible.
6. Evaluate whether there are any additional potential hazards caused by the power outage that can be alleviated by further activities in the building.
7. Evacuate the building.
8. Reentry procedure is on pages 86 and 87.
9. As soon as the building is cleared for normal activities, push containment reset button and start penthouse exhaust fan (for summer operation only) and reset and start Cell 1-2 mercury light cooling fan.
10. Start systematic check-out; check telealarm relays, light bulbs, fuses, heaters, etc.

A-3.3 Loss of Building Air Supply

Loss of the building air supply would cause the pneumatic instruments to be out of service. No air-operated valves could be changed, causing loss of process flexibility. The air-to-open ventilation inlets would close, putting the building into containment. Any air-operated in-cell transfer jets could not be operated. Liquid level and density measuring instruments would fail. Loss of air purge during aluminum or stainless steel dissolutions could allow buildup of

dangerous quantities of H_2 gas in the dissolver if dissolution were not terminated by dilution and cooling when purge was lost.

All systems depending on air pressure should be in operable conditions as soon as the air supply is restored, provided they were operating properly before the loss of air and no changes in valve setting, etc. were made during the air supply shutdown. A check should be made.

Loss of Building Air Supply Checklist

1. Leave tanks closed (no air venting).
2. Turn off liquid to the scrubbers.
3. When air supply is restored, systems should be in operable condition.
4. Check all systems using air pressure.

A-3.4 Loss of Other Services

Steam and water services are critical only during extended shutdowns. Loss of steam would result in no way of emptying the T-30 pit sump and in possible freezing of pipes in winter. Loss of cooling water could result in failure of condensers, heat exchangers, and cooling coils. Means could be devised to circumvent these possibilities, if necessary, in the time allowed.

A-3.5 Non-Liquid-Metal Fire in the Cells

One of the most hazardous credible accidents is a fire in a cell. This event has been discussed above (Sect. 12.2). Immediate actions would be:

1. Turn on the fog spray.
2. Turn off all the feed pumps (front panelboard).
3. Send someone to pull the fire alarm or call 3-6358 and report the fire.
4. Alert stack area - call 3-6234.
5. Send someone to cover the air inlets to the cell.
6. Jet water from floor of cell and pit to prevent flotation of the tanks.
7. Close bottom valves on head tanks in make-up area.
8. Evacuate the building of people not needed to combat the emergency. Have a gas mask within instant reach of each person remaining in the building. (LOCATED IN EACH AIRLOCK).

A-3.6 Sodium or NaK Fire in the Cells

DO NOT TURN ON THE FOG SPRAY!

All operations involving sodium or NaK will follow the procedures of Appendix D. Non-essential combustible materials will be removed from the cell and all water lines into the cell will be tagged "Do Not Operate." The recommended fire extinguishing equipment will be provided: these include argon gas piped into the cell, and a supply of powdered graphite and/or Met-L-X or Pyrene-G1 powder inside the cell, and a larger dry powder extinguisher of similar type piped into the cell.

Checklist for Sodium or NaK Fires

1. Allow very small fires of droplets, which obviously will cause no harm, to burn out after moving manipulators out of the way.
2. Snuff out small fires with argon cover gas. Keep graphite or Met-L-X supply handy. Cover burning material thoroughly, if necessary.
3. Notify supervision at once if fire appears to gain momentum.
4. Use large dry powder extinguisher.

A-3.7 Flotation of T-30 Due to Pit Flooding

Gross leakage of water into the T-30 pit or into the Cell 4 pit could float the storage tanks and disrupt the piping. The inleakage should be stopped and the solution jetted - if this is not possible then water should be added to the tanks to decrease their buoyancy. Telealarms and liquid level indicators at the central control panel indicate the condition and alarm points of these sumps. Procedures for jetting T-30 are given in Appendix B-5, and for jetting the scupper and/or sump in Cell 4 in Appendix B-8.

Vaughen calculated the empty T-30 tank could float when the water level reached 28 in. above the bottom of the 7-in.-deep sump (Fig. 14). The telealarm is set at 12% of full scale, or 12 in. from the bottom of the sump, allowing 16 in. of water "grace." [Some 50 in. of water would be required to float the tank when full (Fig. 15).] The water

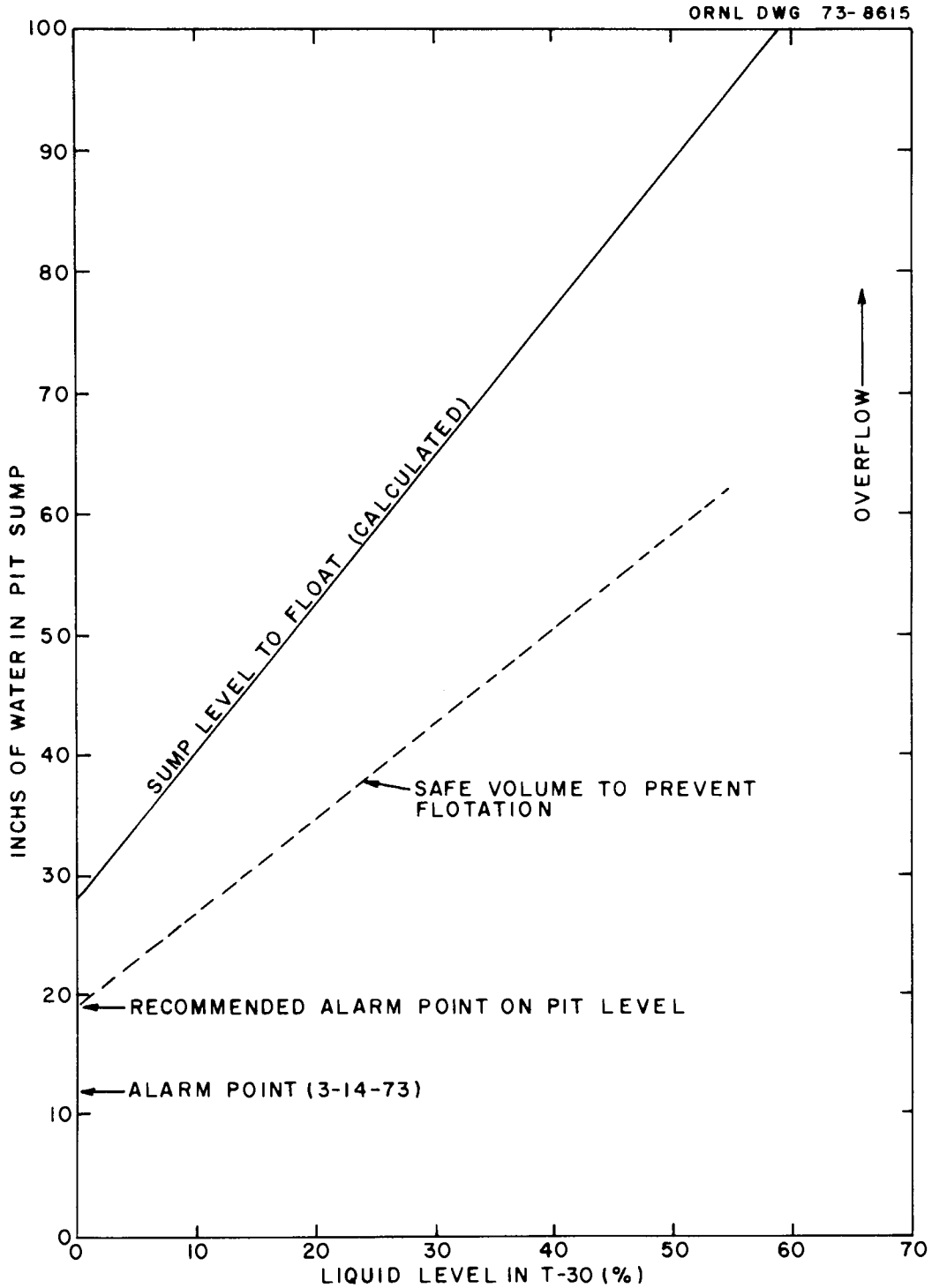

Fig. 14. Flotation of Tank T-30 due to Ground Water.

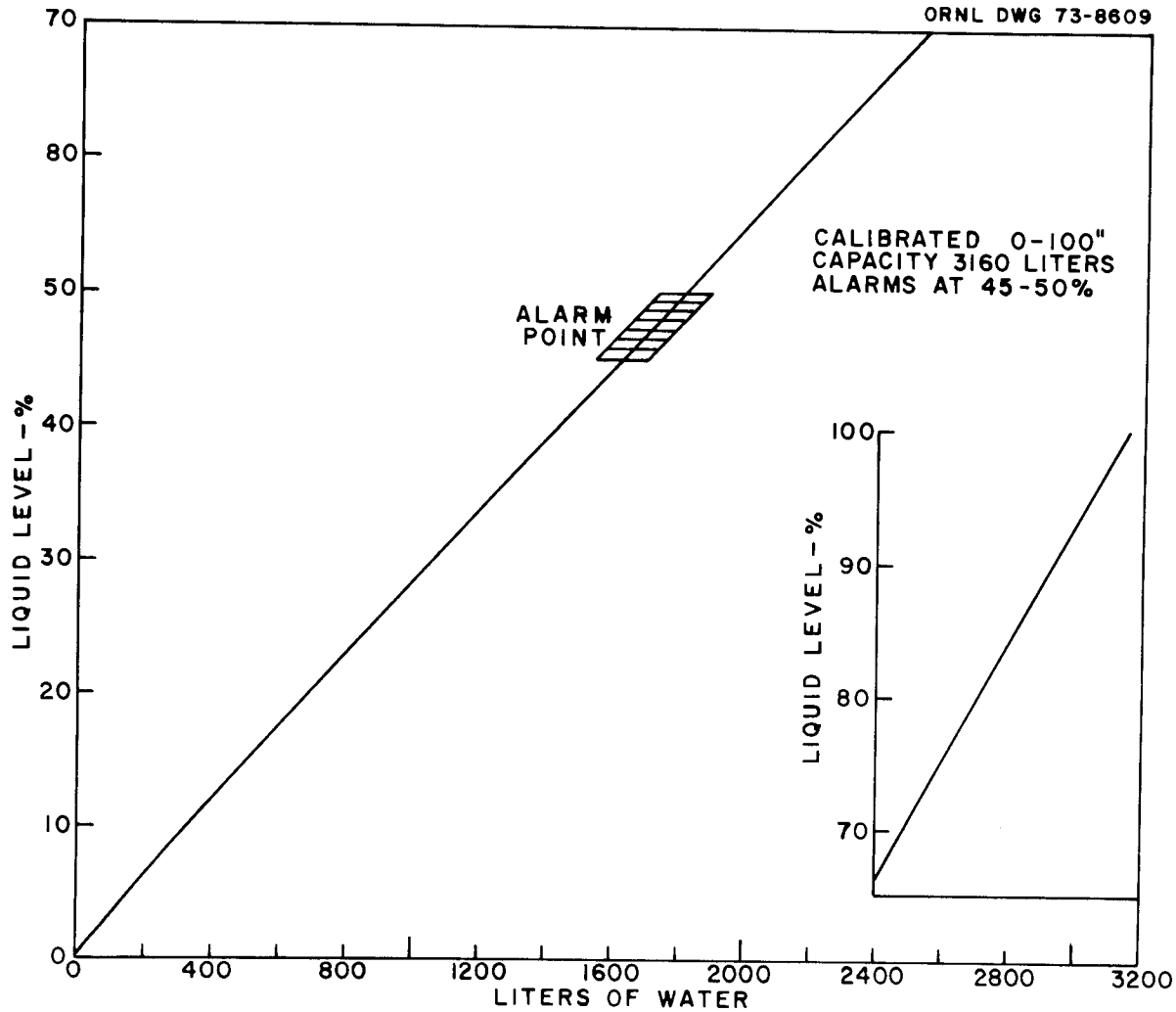

Fig. 15. Calibration Curve for Water in Tank T-30.

in the sump is to be routinely jetted at 11-in. depth by operating personnel or the shift patrol, using a steam jet located in the southwest corner of the Operating Area (Fig. 16).

The Cell 3 sump normally operates at <70% of full scale on its liquid level instrument, the Cell 4 sump at <5%, and the Cell 4 scupper at <20% of full scale. Labelled sump jet controls are located on the rack between Cells 3 and 4 in the Operating Area.

The Problem of Flotation of T-30. - T-30 tank could float if sufficient ground water or leakage from the cooling jacket were to fill the pit. The following calculations were made to assess the severity of this problem.

Tank Wt. 800 kg 1760 pounds

Tank Area 148 dm^2 16 ft^2

Wt. of Contents (18% on LR)
829 kg 1810 pounds

Water level to float empty tank

$$\frac{800}{148} = 5.4 \text{ dm} \quad 21\text{-in.}$$

Water level to float tank with present contents.

$$\frac{1620}{148} = 10.9 \text{ dm} \quad 43\text{-in.}$$

Measured from bottom of sump (7-in.) this would be 28-in. to float empty tank, 50-in. for 18% (Full) one.

Volume of water in pit to float empty tank:

Pit Area 328 dm^2 35.6 ft^2

Tank Area 148 dm^2 16 ft^2

Net Area 280 dm^2

ORNL DWG 73-8611

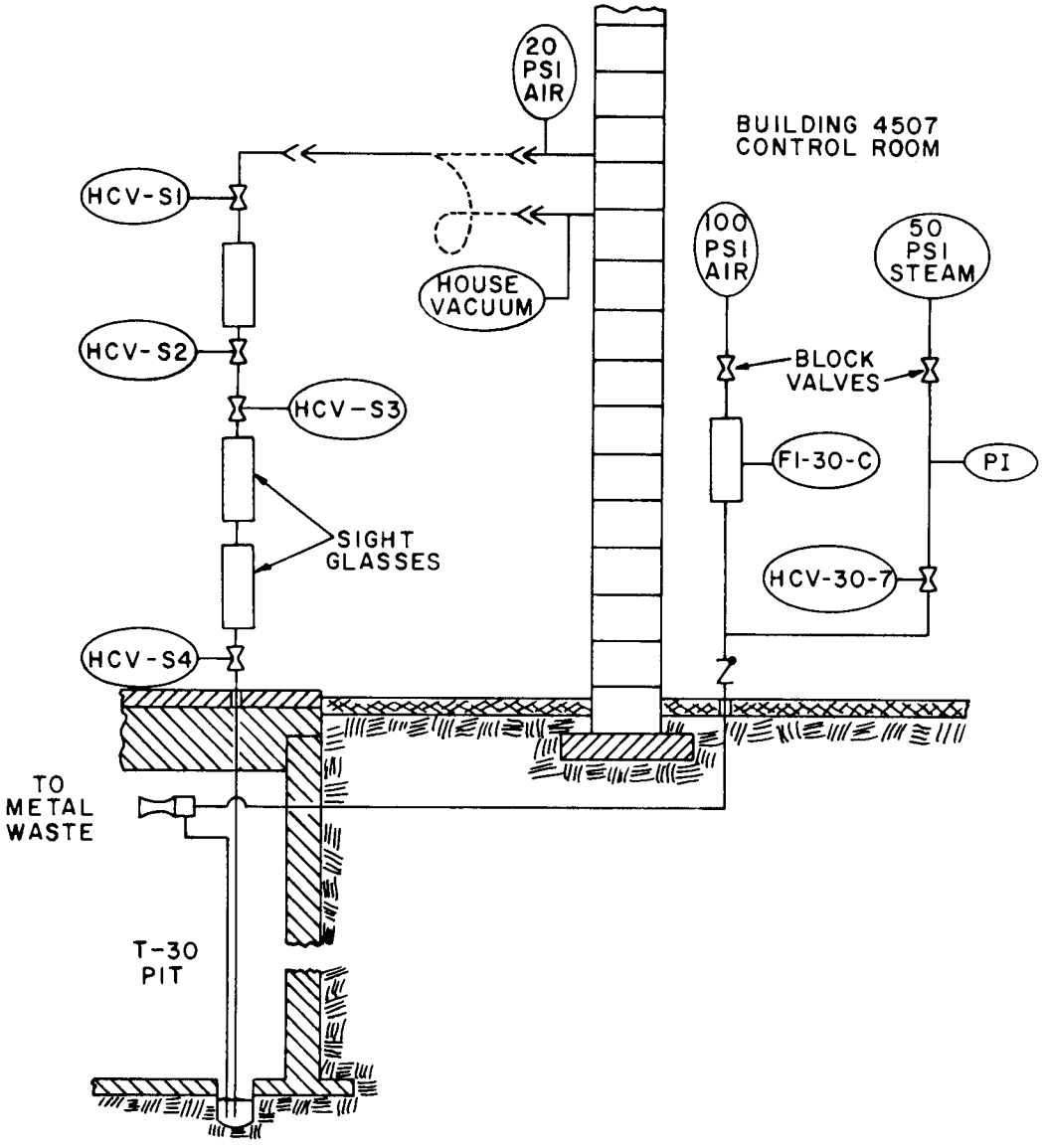

Fig. 16. Schematic Diagram Showing Sampler and Steam Jet for T-30 Sump.

Depth 5.4 dm

Volume - 280 x 5.4 = 1500 liters

(Sump volume, 33 l, is insignificant)

Volume of water to float 18% (full) tank (LR = 18%):

Net Area 280 dm^2

Depth 10.9 dm

Volume = 280 x 10.9 = 3000 liters

Above 10.9 dm (50-in. from bottom of sump) pit opens out.

Pit Area = 590 dm^2

Tank Area = 148 dm^2

Net Area = 442 dm^2

Volume per foot = 442 x 3.048 = 1340 liters/foot.

Pit Level Alarm:

Level alarm to be set at 12% of full scale reading of 100-in. This is 12-in. from bottom of sump, or 5-in. above pit floor. Alarm at this point gives 26-12 = 14-in. of grace before empty tank floats.

$$14 \times \frac{2.54}{10} \times 280 = 996 \text{ dm}^3 \text{ or } 996 \text{ liters.}$$

Present rate of cooling water flow is 1.7 l/minute. This allows $\frac{996}{1.7}$ = 586 minutes or ∿9.75 hr to do something about a ruptured water jacket.

Wt. of Tank:

Diameter - 4'6" 13.7 dm

Height - 7'6" 22.9 dm

Plate - 1/4-in. steel 0.0637 dm

Surface area = $2 \times 1/4\ \pi D^2$

$+ \pi DH$

$= 1/2 \cdot \pi \cdot 13.7^2 + \pi \cdot 13.7 \times 22.9$

29.75

$= 13.7 \times \pi\ (6.85 + 22.9)$

$= 1280\ dm^2$

Metal volume $= 1280 \times 0.0637 = 81.3\ dm^3$

Metal weight $= 81.3 \times 7.92 = 648$ kg

Tank Jacket

Diameter = 4'7" 14.0 dm

Height = 3'6" 10.7 dm

Thickness 11 gage = ∿0.11-in. = 0.028 dm.

Metal weight = $\pi \times 14.0 \times 10.7 \times 0.028 \times 7.92$

= 104 kg

Total tank weight

Vessel	648 kg
Jacket	104 kg
Misc. Parts & Nozzles	48 kg
Total Wt. =	800 kg

Tank Cross Section:

Diameter = 13.7 dm 4'6"

Area $= 1/4\ \pi\ D^2$

$= 148\ dm^2 = 16\text{-}ft^2$

APPENDIX B

APPENDIX B: ROUTINE OPERATING PROCEDURES

B-1: To Manually Place Building into Containment

1. Push Manual Contain button on control panel in Operating Area.
2. Silence horns and bells by pushing Silence Klaxon button on panel.
3. Silence Emergency Ventilation and 1st Level Dampers buzzers.

B-2: To Remove Building from Manual Containment

1. Push Manual Contain Reset button on control panel.
2. Restart blower in Penthouse (summer only).

B-3: To Work on 4507 Emergency Power System or Containment System

1. Notify Guard Headquarters (3-6646) of intent to disable containment system.
2. Disable containment system with key switch.
3. Silence containment horns and bells.
4. Perform necessary work or restore Emergency Power.
5. Clear up HP and/or containment instruments, and check function lights at central panel.
6. Call Guard Headquarters and notify of intent to reactivate system.
7. Reactivate system with disabling key.
8. Reset containment system by pushing reset buttons.

B-4: To Reset Evacuation Alarm Horns

1. Shut off all 4 nitrogen cylinders in Charging Area.
2. Push in both slide valves on solenoid valves on evacuation horns—one (No. 1) on east wall of Charging Area and one (No. 2) on east wall of penthouse.

3. Open 2 full nitrogen supply cylinders to system.
4. Replace 2 empty nitrogen supply cylinders.
5. Have HP survey empty cylinders, "green tag" them, place in rack outside building.
6. Order 2 replacement cylinders of nitrogen from Stores (phone 3-6476).
7. Check HORN TROUBLE lights on central control panel; they should not be burning. A pressure switch signals "horn trouble" when the cylinder pressure is less than 1000 psig. (Other pressure switches indicate Low Line Pressure at 80 psig, High Line Pressure at 120 psig; Normal Line Pressure is 100 psig.)

B-5: Procedure for Jetting Tank 30 Pit Sump

1. General

The pit containing the tank T-30 has a stainless steel liner across the floor to catch solution that might leak from T-30 (Figs. 14-16). However, the ground water table usually exceeds the height of this liner and consequently substantial inleakage occurs, especially in wet weather. A 7-in.-deep sump is located in one corner of the pit, and is instrumented to show the liquid level in the sump and pit on a gage on the central control panel and on a manometer at the operating face of Cell 4.

2. Jetting the Sump

Open the red valve between Fl 30-C and HCV 30-7 (steam supply) located in the SW corner of the Operating Area (Fig. 16).

Adjust Fl 30-C to about half scale (0.4) to admit purge air to the jet.

Open HCV 30-7 and observe level in sump as indicated on manometer at west side of Cell 4 window in control room.

Turn HCV 30-7 off at about 1.6 in. on manometer. Wait one minute to purge steam from the jet supply.

Turn off air purge (F1 30-C).

CAUTION: If the steam is not purged, liquid may be sucked into 4507 by the vacuum when the steam condenses.

3. Special Notes and Procedures

When the T-30 storage tank is in active use (rather than in a standby condition), the liquid in the sump must be checked for radioactivity before it is jetted. Any radiation in the sump contents will be assumed to be indicative of a leak in tank T-30 and immediate action must be taken to minimize further loss material (material in T-30 pit sump is currently not recoverable). If radiation is detected in the sump contents, immediately notify building supervisor.

Two people are required to sample the T-30 pit sump; preferably one of these should be a health physics surveyor if available. If the HP surveyor is unavailable one technician will monitor while the other will operate the sampler.

CAUTION: Use extreme care since if any radiation is to occur in the sump content it is likely to be quite high.

4. Preliminary Operations

Obtain PRMS (chirpers) in good working order.

Notify HP surveyor that a sump sampling is scheduled (or shift supervisor if during off shift operation).

Turn cutie pie on and check battery; check zero, set to most sensitive scale.

Close all sampler valves.

5. Clearing the Sample Tube

Referring to Fig. 17 attached:

Connect line between pressure source and HCV-S1. This pressurizes line.

Open HCV-S1 for about 10 seconds.

Close HCV-S1.

Open HCV-S2, -S3, -S4.

Note venting through tube.

Close HCV-S2, -S3, -S4.

Disconnect line from pressure source.

6. Sampling the Sump Contents

Connect line to vacuum source. CAUTION!

Open HCV-S1 for 1 minute.

Close HCV-S1.

Disconnect vacuum line (to prevent sucking liquid out of line into piping in operating areas in the event of a valve failure).

Open HCV-S2, -S3. CAUTION! Watch for radiation closely.

While observing sight glass and cutie pie, open HCV-S4 carefully until evidence of radiation is seen (quickly close HCV-S4) or liquid appears in the lower sight glass.

ORNL DWG 73-8610

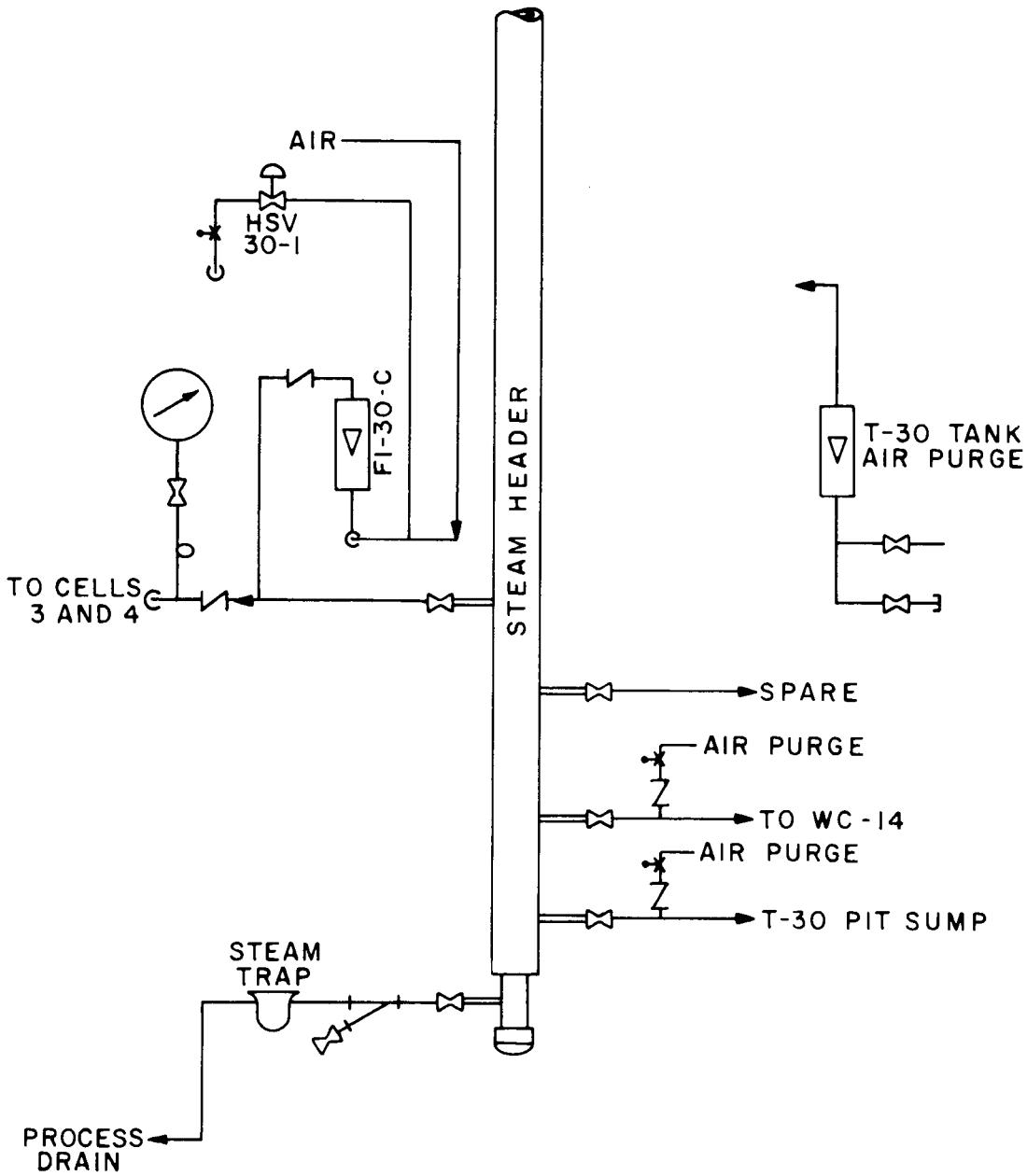

Fig. 17. Schematic Diagram of Steam Jet Controls. (SW Corner, Building 4507).

If no liquid is seen and no radiation is detected, it is likely that the vacuum was not sufficient. Close HCV-S2, -S3, -S4.

Reconnect vacuum line and repeat Sects. 6.1 through 6.6 carefully.

CAUTION: If the sight glass is completely full, it may appear to be empty. So if no liquid is seen, do not re-evacuate the system, but rather, repeat step 3 and watch for an interface to drop out of the sight glass.

If no radiation has been detected and liquid has been seen in the sight glass, blow down the sample line and close all valves.

Disconnect the sampler from the pressure vacuum source and return cutie pie to "off" position.

B-6: Procedure for Jetting Cell 1 Pit Sump

The Cell 1 sump is a stainless steel-lined pit approximately 9 ft by 6 ft by 4 ft deep filled with tanks and lead shielding walls. A liquid level probe was installed on the east wall (as shown on Dwgs. P-12225-CD-008D and M-12225-CD-004D); the depth of solution is indicated on a gage on the main control panel in the Operating Area. A telealarm signals when the solution depth reaches 4 inches. An S and K 1/2-in. jet with a screened suction leg was installed along the east wall. The jet discharges through a manually operated ball valve on the east wall to the RHD. The jet may be used with either steam or water, and is operated from the Makeup Area behind Cell 1.

1. Open ball valve to hot drain on east wall using manipulators.
2. Open steam valve (or water valve) in Makeup Area to jet supply. Operate jet until liquid level drops to zero.

3. Close steam valve to jet. Open water valve for 1 minute to cool system and collapse the vacuum generated by the steam jet.
4. Close ball valve to hot drain.

B-7: Procedure for Jetting Cell 2 Floor Sump

Open air-operated valve to hot drain using control handle under lead glass window in Operating Area. Turn on labelled process water supply to sump jet by opening two shut-off valves under the window. Listen to jet operation over in-cell PA system, and when the jet "sucks air" turn off both water valves and close the air-operated valve to the drain.

B-8: Procedure for Jetting Cells 3 or 4 Sumps or Scuppers

Water accumulated in Cells 3 or 4 sumps or scuppers may be sent to the RHD by using water jets located on the piping and valve rack between the two cells.

The valves for Cell 3 sump jet 331 are labelled HV-31-1 and HV-31-2, and are located west of the Cell 3 viewing window on the rack. The normal liquid level in Cell 3 sump is to be maintained at less than 70% of full scale on the gage on the central control panel.

The valves for Cell 4 scupper 441 and HCV-41A and HCV-41B are located east of the Cell 4 viewing window on the rack. Those for the Cell 4 sump 440 (HCV-40A and HCV-40B) are located in the same place. Normal level for the Cell 4 sump is <5% and for the Cell 4 scupper is <20% on the gages at the central control panel.

B-9: Solution Transfer from T-30 to Cell 4 Storage

1. General

Solution stored in T-30 may be transferred by steam jet to Cell 4 storage tanks T-416 and T-417 in ∿400-liter lots. From these tanks smaller lots may be transferred to the process as needed.

The transfer from T-30 is a hazardous operation requiring continuous assistance and coverage by the Health Physics Division personnel assigned to the building. Particular attention should be given to preventing any of the solution backing up into Cell 1. Cell 1 was disconnected from the Cells 3-4 Curium Recovery Facility in 1972, and many procedures below are no longer applicable (Fig. 18).

2. Preliminary

The procedure for the transfer of solutions stored in Tank T-30 to storage in T-416 and T-417 in Cell 4 is described in the document "Hazard Evaluation for Processing Transuranium Elements in the Curium Recovery Facility (Bldg. 4507)," by V. C. A. Vaughen, et al. Copies of the unpublished document are filed in Building 4507.

B-10: Routine Building 4507 Checks

Regular checks are made on operational and safety features of Building 4507; these are detailed below.

B-10.1 Normal Operational Check List

A check of the building and all phases of operation is made daily to ascertain the performance of systems and to insure that any malfunction is corrected as rapidly as possible. The building is checked by the

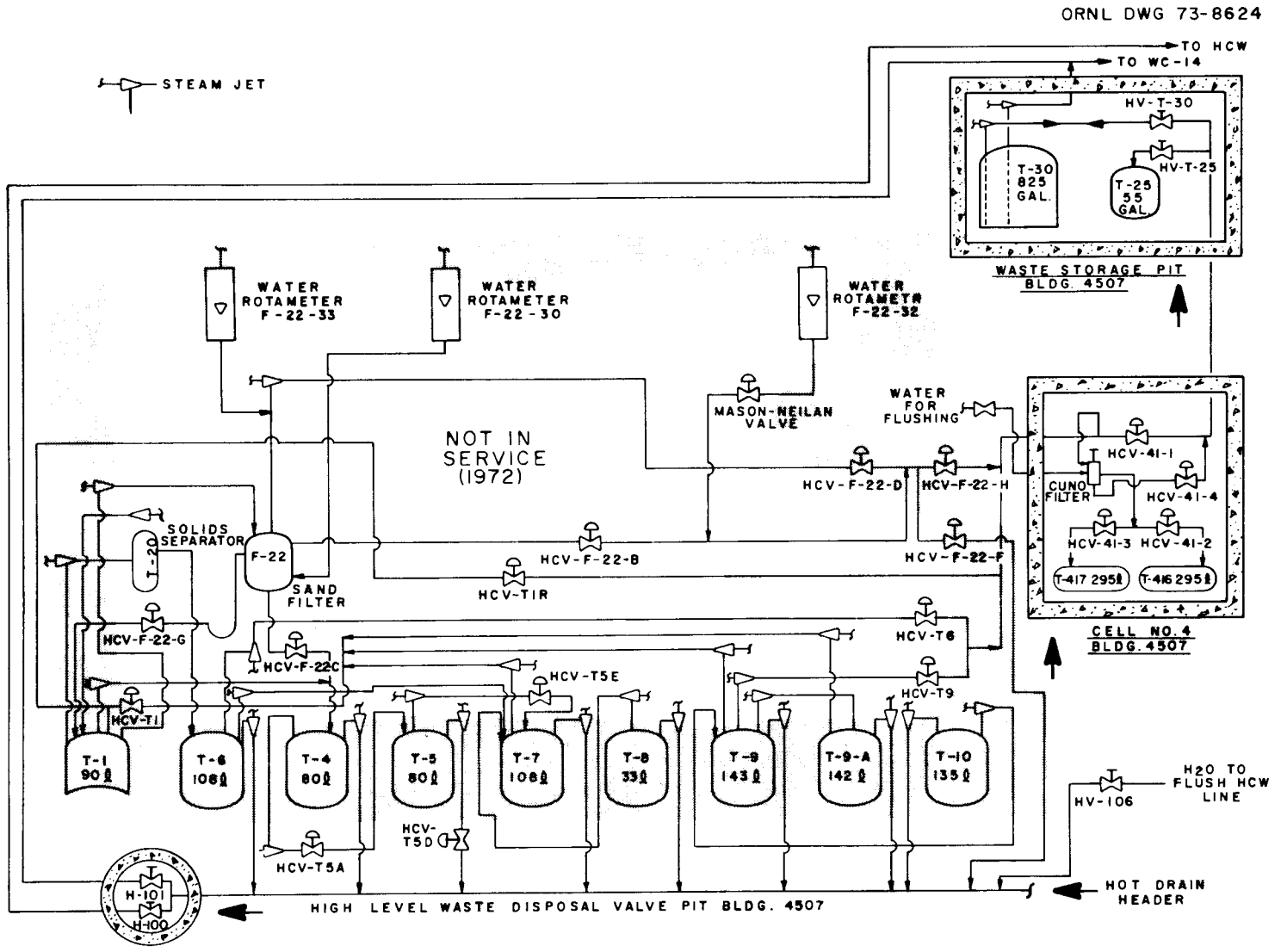

Fig. 18. Solution Transfer from T-30 to Cell 4 Storage.

Operations Division Patrol when unoccupied. The vacuums of all cells and operational areas are observed, as are the vessel off-gas systems in Cells 1, 3, and 4, and T-30. Essential cooling water rates to heat exchangers, tank coils and jackets are observed when necessary to condense steam and/or regulate temperatures; particular attention should be given to storage tanks which contain radioactive material for processing. The liquid level and specific gravity should be recorded to insure that no loss of material or buildup due to jacket rupture in these tanks escapes detection. The sump liquid level of each pit in which these tanks are located, are observed as a double check on any loss. Table B-10.1 is a copy of a typical Daily Building Check List used during operation of the Curium Recovery Facility. Malfunctions must be reported to supervision as soon as noted.

B-10.2 Containment Check List

The building is placed in containment monthly to assure that all related equipment functions properly. A containment panelboard located in the Operating Area shows when each feature of the system is actuated; an adjacent panelboard indicates by differential pressure gauges the air pressure in the cells (primary) and various operational areas (secondary). The Monthly Containment Checklist of Building 4507 is shown in Table B-10.2. All features are recorded before containment, each is inspected visually during containment, and recorded again after containment to note and correct, if possible, any defective equipment that impairs the containment efficiency.

Table B-10.1 Daily Building Check List

Week Ending _____

	Mon.	Tue.	Wed.	Thur.	Fri.	Sat.	Sun.
Off Gas (in.)							
Cell 1							
Cell 2							
Cell 3							
Cell 4							
Chg. Area							
MU Area							
Op. Area							
Penthouse							
COG Duct							
Waste Pit							
Vessel Off-Gas (in.)							
T-30							
Cell 1							
Cell 3							
Cell 4							
Purges (1 pm)							
Cell 4 Pit (65-70%)							
T-30							
Cooling Water (gpm)							
E-421							
E-425							
E-321							
E-403							
T-30							
Cell 4 Tanks							
T-416-LL (%)							
-Spg (%)							
-Temp. (°C)							
T-30							
-LL (%)							
-Spg (%)							
- Temp. (°C)							
Sumps (LL)							
Cell 4-Pit							
-Scupper							
Cell 3-Scupper							
Cell 1-Pit							
T-30-Pit							

Table B-10.1 Daily Building Check List (Cont'd)

	Mon.	Tue.	Wed.	Thur.	Fri.	Sat.	Sun.
Scrubbers							
Cell 4							
Caustic (%)							
Water (%)							
Cell 3							
Caustic (%)							
Water (%)							
MU Area							
Operating (yes)							
(no)							
Caustic Supply (in.)							
Initials							
Time							
Remarks							

Table B-10.2 Monthly Containment Checklist for Building 4507

1. OBSERVE THE FEATURES BELOW
2. EXAMINE ROUGHING FILTERS FOR CONDITION.
3. PUSH CONTAINMENT BUTTON.
4. RECHECK FEATURES.
5. PUSH CONTAINMENT RESET AND START PENTHOUSE FAN.
6. CORRECT ANY DEFICIENCIES.
7. VISUAL INSPECTION OF DAMPERS IS: ◐ OPEN; ⊖ CLOSED (located on the end of damper shaft).

	DATE		DATE		DATE	
	BEFORE	AFTER	BEFORE	AFTER	BEFORE	AFTER
A. CONTAINMENT PANEL						
B. VACUUM COG DUCT						
VOG						
CELL 1						
CELL 2						
CELL 3						
CELL 4						
OPERATING						
CHARGING						
MAKEUP						
PENTHOUSE						
WASTE PIT						
C. DAMPERS OPERATING						
(POSITION) 15 T A/C						
10 T A/C						
HOOD EXT.						
MAKEUP INT.						
PENT. INT.						
PENT. EXH.						
PENT. EMER. EXH.						
D. COMMENTS						
PERSON REPORTING, INIT.						

B-10.3 Filter Checks

All air entering the building passes through roughing filters; these filters will be replaced by operating personnel as required. The air inlet to each cell is filtered by a roughing and an absolute filter, and reverse flow through the inlet is prohibited by a backflow preventer. Air leaving Cells 3 and 4 is filtered also in the same manner and a backflow preventer prohibits flow from the off-gas duct into the cell.

Inspection of all absolute filters in the building and cells will be conducted every six months by the Inspection Engineering Department of the Plant and Equipment Division using installed DOP fog generators and sampling probes. Operating personnel will inspect the condition of the roughing filters and note the pressure drop across them, on a weekly basis during routine containment checks. An excessive pressure drop or physical damage will necessitate a filter replacement.

B-10.4 Health Physics Instruments

Health Physics personnel have the responsibility for the operation of all radiation monitoring instruments. Daily inspections of these instruments will be made and arrangements made immediately to correct any erratic or malfunctioning instrument. The type and location of all instruments and alarms in Building 4507 are given in Sect. 7.1 above.

B-10.5 Routine Health Physics Monitoring

Filters from the continuous air monitors and COG and VOG samplers are collected on schedule and counted for long-lived alpha and beta-gamma

activity. These data are analyzed on the computer and presented to the building supervisor for records. Any readings above 0.1 x MPC_a-40 are specially noted as near tolerance or above tolerance in the table of daily data. Health Physics personnel will inspect instruments daily, replace filter tape rolls as needed, and report malfunctions to I&C Division.

B-11: Transfer of Materials at Building 4507

Materials being transferred into or out of Building 4507 must be monitored and cleared by Health Physics, and must bear the appropriate HP tag showing its condition:

Material Transfer Radiation Hazard Tag (UCN-2785) - magenta and yellow

Decontamination Special Handling Tag (UCN-12) - magenta and yellow

Health Physics Restriction Tag (UCN-2491) - buff

Material Transfer Clearance (UCN-14) - green

Material Transfer Clearance (Property) (UCN-14A) - green

New materials from the Stores Department do not require these tags.

B-12: 4507 Checklist for Scheduled Power Outage

1. Notify Shift Patrol Monitoring Station (3-6234) that there will be an alarm signal from 4507. Notify Guard Headquarters (3-6646) of possible alarm from 4507 when power switches over.
2. Shut off nitrogen cylinders in Charging Area (behind cells) to prevent discharge of evacuation horns.

3. Observe normal vacuum indications on central control panels.

4. When normal power is disconnected, observe vacuum gages to see if cell ventilation fans switched to emergency power supply. If power switches, note whether "normal" vacuum is shown on gages. If power did not switch to emergency supply, go to 4556 pit and attempt to start blower by pushing Start Reset and turning start switch to No. 2 On, No. 1 in Standby position. If the fan does not start, open the Bypass butterfly valve overhead at foot of stairs in 4556; then manually put 4507 into containment by removing cover on Manual Contain button and pushing it - NOTE: NOT THE MANUAL EVACUATE button.

5. When normal power is shut off, the building will automatically go into containment. Push buttons on control panel to Silence Klaxons and Emergency Ventilation buzzers. Silence or Acknowledge Telealarm signals. If monitoring instruments alarm or otherwise malfunction, call Shift HP man.

6. When normal power is restored, make the same checks:

   a. No. 2 fan is operating; vacuums are normal.

   b. Push Manual Contain Reset button on control panel.

   c. Check position of slide valve (in-closed) of evacuation horn in box on east wall of Changing Area. If closed, open the cylinders of N_2 (2) that were closed earlier.

   d. Check whether all monitoring instrument lights are normal. If not, call HP.

   e. Close Bypass Valve in 4556 if it was opened manually.

f. Not necessary to restart blower in Penthouse. Red lights will still show on panel (ventilation section).

APPENDIX C

APPENDIX C: EXAMPLE OF TYPICAL RUNSHEET

C-1. Procedures and Samples for Short-Decay Experiments on LMFBR Fuels in Bldg. 4507

Run C: FR-45

I. Preliminary Date_____

II. Shearing Fuel Pin No. _____ Date_____

A. Preparation

1. Prepare _____ solutions for off-gas scrubbers. Fill scrubber head tanks, empty catch tanks.
2. Prepare solid adsorbant traps _____ and absolute filters for in-cell use.
3. Empty gas holder and flush with _____ gas. Starting volume:_____; _____ liters.
4. Evacuate _____ one-liter stainless steel gas bottles. Number:_____. Vacuum:_____-in. H_2O.
5. Determine tare weight of shear bowl:_ _____ g.
6. Place one fuel pin in shear magazine with top (plenum) end toward shear. (Blade down).
7. Assemble shear, scrubbers, and gas holder.
8. Purge system for _____ minutes with _____ c.f.h. flow of _____ gas.
9. Leak test system. _____OK.
10. Prepare (zero) equipment.

B. Shearing

1. Turn on scrubbers; flow = _____ ml/min at _____ hrs.

2. Turn on purge of _____ gas at flow of _____ c.f.h. at _____hrs.
3. Raise shear blade; push 1/2-inch (12 turns of 24 threads/inch feed screw) into body of shear. Cut off end plug.
4. Push _____ inch of fuel pin into shear, and cut off _____ of plenum.
5. Repeat _____times to cut off rest of plenum.
6. Push 1/4-inch of fuel pin into shear to cut off insulator pellet (ThO_2).
7. Push _____ -inch of fuel pin into shear, and cut off the first segment of the _____ -inch column of fuel.
8. Repeat _____ times. Save rest of pin in screw cap bottle.
9. Continue purge gas for _____ minutes.
10. Turn off purge gas.
11. Turn off and disconnect gas holder.

    Volume: _____ liters.
12. Turn off scrubber. Volume of scrub solution = _____ ml. Sample as _____. Analyze samples for Gr γ, Gr β, γ Scan, and tape, ^{131}I, $^{3}H_2O$, Te, _____
13. Connect evacuated stainless steel gas bottle No. ____ (_____-inch H_2O vacuum) to outlet of gas holder. Withdraw approximately 1-liter of gas by filling to just less than atmospheric pressure: (_____-inch H_2O). Set aside temporarily.
14. Connect gas holder outlet to disposal charcoal trap, and slowly empty gas onto/through the charcoal. Purge with _____ gas at _____ c.f.h. flow for _____minutes. Shut off charcoal trap and gas holder.

C. After Shearing Date_____

1. Open shear and feed magazine. Put all of fuel pin into shear bowl. Weigh. G:_____ T:_____ N:_____ g.
2. Separate plenum, end plugs, and insulator pellets from segmented fuel.
3. Reweigh plenum, end plugs, and ThO_2 pellets: _____ g.

APPENDIX D

APPENDIX D: SODIUM AND NaK HANDLING PROCEDURES

Pyrophoric metals must be handled with great care. Irradiation experiments (capsules) containing up to 65 g of NaK may have to be disassembled in the facility. The main precaution in working on these experiments is to prevent the flammables from igniting; and, if they ignite, to extinguish the flames before the fire gains momentum. If a fire should occur, attempts should first be made to put out the fire without using the installed extinguishing system; if the fire is very small and appears it will cause no harm to cell or equipment, it may be allowed to burn itself out. A cell fire extinguishing system should be used as a back-up system, i.e. when it appears that the fire might get out of control.

It would be very difficult to write procedures covering all experiments containing flammables or pyrophoric metals handled in a cell. In practice, each new job must be reviewed and necessary controls developed. A typical example of a job requiring such control is the removal of NaK from capsules. For this, the procedures and precautions given below (developed by the ORNL Operations Division) have been effective in preventing and controlling fires:

A. Preparation of the cells

(1) All nonessential combustibles are removed from the cell; valves to water lines leading into the cell are tagged "Do Not Operate." An orderly arrangement of equipment with an uncluttered work space is provided. Two stainless steel trays (about 12 in. by 16 in.) are provided to catch any drips of NaK.

(2) Fire extinguishing equipment is provided as follows: A cylinder of argon is set up outside the cell with a 1/4 in. line going into the cell to snuff out small fires; a metal funnel is attached to the end of the line for directing the argon flow on the NaK or oil fire. A tray of Metal-X powder (about a gallon) with a small scoop is placed in the cell for putting out NaK fires. A dry-powder fire extinguisher is set up outside the cell with a hose going into the cell for discharging on larger fires.

(3) The following items are put in the cell for use in reacting the NaK and disposal of it: one pint of 55% mineral oil and 45% butyl alcohol, one pint of mineral oil, one metal container (with a top that is easily removed and replaced) that will accommodate the specimen in the mineral oil-alcohol mixture, and one metal pot (about 1/4 full of mineral oil) with a screw top for disposal of the NaK.

(4) General comments:

a. Limit the amount of NaK in the cell to the contents of one capsule.

b. Seal the NaK in a metal container and remove from the cell immediately after removing from capsule. Do not leave in cell unattended, i.e., overnight.

c. Limit amount of oil and alcohol to one small metal pan with metal cover, i.e. about a pint. Metal cover to be kept in place at all times except when putting items into or removing from pan.

d. Keep cell as uncluttered and free of combustibles as possible.

e. When the manipulators are not in use they should be placed in a position to minimize the exposure of the plastic boots from a small fire involving NaK droplets.

B. Procedure

(1) Clamp the capsule vertically in a hacksaw vise and start cutting the containment of the capsule well above the NaK level; one stainless steel pan should be placed under the capsule to catch any drips of NaK. Once the saw blade has cut into the NaK containment, small flashes or smoke from the NaK will generally appear; using the bottle containing pure mineral oil, squirt oil on the saw blade and around the cut - this generally will provide a cover that will prevent the NaK from burning. If during the cutting process the NaK and oil flames, place the argon funnel over the capsule and flood the immediate area with argon. After completing the cut, squirt pure mineral oil into the capsule to provide a cover over the exposed NaK.

(2) The pot (with screw cap) for disposing of the NaK should be placed in the other stainless steel pan. Very carefully remove the capsule from the saw vise, hold it over the stainless steel pan, and pour the NaK from the capsule into the pot. Wash out the capsule with additional mineral oil and pour it into the NaK disposal pot; repeat this operation two or three times. Screw the top on the NaK pot and place it in a 6-in. diam x 10-in. long can. React any NaK in the stainless steel pans or floor of the cell by squirting with the 45-55% oil-alcohol mixture; this will slowly react the NaK.

(3) Replace the capsule in the saw vise in the vertical position. With the proper tools, loosen the specimen in the containment jacket. Set the metal container (pot) for accommodating the specimen in the stainless steel pan. Slowly lift the specimen from the containment jacket and place it in the specimen pot; add oil-alcohol mixture to the pot until it covers the specimen and place the top over the pot. (The oil and alcohol will slowly react the NaK on the capsule.)

(4) Squirt some mineral oil into the NaK containment jacket. If there seems to be several cc of NaK left, open the NaK disposal pot and pour the remaining NaK into it. Screw the cap back on

the NaK pot, place it in a 6-in. diam x 10-in. long can and monitor it. If reading less than 500 mr/hr, remove it through the vertical 6-in. plug and place it in a third container for a non-routine immediate shipment to the waste disposal area. If the can reads greater than 500 mr/hr, load the can into a carrier instead of the third container, and make immediate shipment to the waste disposal area.

(5) Clean the remaining NaK from the specimen by washing with oil and alcohol mixture. Place the specimen in a metal tube and prepare it for shipment in a 6-in. diam can. React the remaining NaK particles on the floor and in the pans with the oil and alcohol mixture; use the argon to extinguish any NaK that starts smoking or flashes. Always have the gallon container of Metal-X powder and scoop accessible for immediate use.

(6) If the job must be left unattended, always cover one pan with the other where NaK droplets exist. Place the oil and alcohol out of the working vicinity and above the floor level. Keep the tops on the NaK disposal pot and the specimen pot. Locate the in-cell end of the fire extinguisher hose in the potential fire vicinity.

(7) When all NaK is reacted, decontaminating with water can begin.

APPENDIX E

APPENDIX E: FISSION PRODUCT CONTENT OF FUELS IN BLDG. 4507 CELLS

Table E-1. Elemental activity (curies) in 2 fuel rods containing 25% PuO_2--75% UO_2 irradiated to 100,000 MWd/t (U + Pu) as a function of decay time

FUEL PINS AFTER IRRADIATION

POWER= 0.00MW, BURNUP= 2.MWD, FLUX= 9.81E 12N/CM**2-SEC

ELEMENTAL ACTIVITY, CURIES
BASIS = SUM OF RODS 1 AND 4

	INITIAL	15.DYS	30.DYS	60.DYS	90.DYS	120.DYS	150.DYS	180.DYS	210.DYS
H	6.10E-02	6.09E-02	6.07E-02	6.04E-02	6.02E-02	5.99E-02	5.96E-02	5.93E-02	5.91E-02
ZN	1.54E-03	7.22E-06	3.38E-08	7.38E-13	1.61E-17	3.52E-22	7.67E-27	1.67E-31	3.65E-36
GA	6.39E-02	1.04E-05	4.85E-08	1.06E-12	2.31E-17	5.05E-22	1.10E-26	2.40E-31	5.25E-36
GE	5.01E-01	1.29E-11	3.30E-21	2.18E-40	1.44E-59	0.0	0.0	0.0	0.0
AS	2.00E 00	2.47E-04	3.92E-07	9.84E-13	2.47E-18	6.19E-24	1.55E-29	3.90E-35	9.78E-41
SE	1.53E 01	2.13E-05	2.06E-05	2.06E-05	2.06E-05	2.06E-05	2.06E-05	2.06E-05	2.06E-05
BR	7.70E 01	3.18E-06	2.71E-09	1.96E-15	1.42E-21	1.03E-27	7.45E-34	5.40E-40	3.91E-46
KR	1.27E 02	3.99E-01	3.98E-01	3.96E-01	3.94E-01	3.92E-01	3.90E-01	3.88E-01	3.86E-01
RB	2.25E 02	1.76E-03	1.01E-03	3.32E-04	1.09E-04	3.59E-05	1.18E-05	3.88E-06	1.28E-06
SR	2.36E 02	1.62E 01	1.37E 01	1.00E 01	7.57E 00	5.91E 00	4.80E 00	4.05E 00	3.54E 00
Y	3.92E 02	2.23E 01	1.91E 01	1.42E 01	1.07E 01	8.28E 00	6.57E 00	5.37E 00	4.52E 00
ZR	1.94E 02	4.02E 01	3.43E 01	2.49E 01	1.81E 01	1.31E 01	9.53E 00	6.92E 00	5.03E 00
NB	5.15E 02	4.62E 01	4.40E 01	3.73E 01	3.01E 01	2.35E 01	1.80E 01	1.36E 01	1.01E 01
MO	4.53E 02	1.93E 00	4.65E-02	2.71E-05	1.58E-08	9.17E-12	5.34E-15	3.11E-18	1.81E-21
TC	5.02E 02	1.84E 00	4.54E-02	9.80E-04	9.54E-04	9.54E-04	9.54E-04	9.54E-04	9.54E-04
RU	2.51E 02	9.22E 01	8.12E 01	6.56E 01	5.53E 01	4.84E 01	4.34E 01	3.96E 01	3.66E 01
RH	3.51E 02	9.23E 01	8.13E 01	6.56E 01	5.53E 01	4.84E 01	4.34E 01	3.96E 01	3.66E 01
PD	3.38E 01	2.72E-05	1.64E-05	1.64E-05	1.64E-05	1.64E-05	1.64E-05	1.64E-05	1.64E-05
AG	2.99E 01	7.59E-01	2.07E-01	3.35E-02	2.10E-02	1.87E-02	1.72E-02	1.59E-02	1.46E-02
CD	3.12E 00	2.42E-02	1.53E-02	9.43E-03	5.81E-03	3.59E-03	2.21E-03	1.36E-03	8.42E-04
IN	5.62E 00	5.11E-03	4.82E-05	6.07E-09	1.18E-09	7.77E-10	5.13E-10	3.38E-10	2.23E-10
SN	1.93E 02	7.63E-01	5.31E-01	3.79E-01	3.13E-01	2.65E-01	2.24E-01	1.90E-01	1.61E-01
SB	3.29E 02	1.26E 00	9.23E-01	8.81E-01	8.62E-01	8.44E-01	8.27E-01	8.09E-01	7.92E-01
TE	3.96E 02	8.11E 00	4.25E 00	2.80E 00	2.02E 00	1.53E 00	1.21E 00	9.96E-01	8.44E-01
I	6.29E 02	1.63E 01	3.83E 00	2.81E-01	2.12E-02	1.61E-03	1.24E-04	1.24E-05	3.98E-06
XE	4.47E 02	1.45E 01	2.11E 00	6.76E-02	6.24E-03	9.94E-04	1.71E-04	2.95E-05	5.08E-06
CS	3.39E 02	8.31E 00	7.92E 00	7.65E 00	7.57E 00	7.53E 00	7.50E 00	7.48E 00	7.45E 00
BA	3.25E 02	3.59E 01	1.96E 01	9.15E 00	7.08E 00	6.66E 00	6.57E 00	6.54E 00	6.52E 00
LA	3.11E 02	3.37E 01	1.50E 01	2.95E 00	5.81E-01	1.15E-01	2.26E-02	4.45E-03	8.76E-04
CE	2.81E 02	8.13E 01	6.97E 01	5.42E 01	4.48E 01	3.87E 01	3.44E 01	3.12E 01	2.85E 01
PR	2.41E 02	7.21E 01	5.61E 01	4.31E 01	3.81E 01	3.50E 01	3.24E 01	3.01E 01	2.80E 01
ND	5.32E 01	1.00E 01	3.93E 00	6.03E-01	9.27E-02	1.42E-02	2.19E-03	3.36E-04	5.16E-05
PM	6.29E 01	1.70E 01	1.64E 01	1.59E 01	1.55E 01	1.51E 01	1.48E 01	1.44E 01	1.41E 01
SM	1.26E 01	2.54E-01	2.19E-01	2.19E-01	2.19E-01	2.19E-01	2.19E-01	2.19E-01	2.18E-01
EU	6.34E 00	2.43E 00	1.46E 00	7.31E-01	5.38E-01	4.79E-01	4.55E-01	4.40E-01	4.28E-01
GD	3.50E-01	9.40E-04	9.00E-04	8.26E-04	7.58E-04	6.96E-04	6.38E-04	5.86E-04	5.38E-04
TB	9.60E-02	1.58E-02	6.58E-03	3.23E-03	2.33E-03	1.74E-03	1.31E-03	9.80E-04	7.34E-04
DY	6.94E-03	4.09E-05	1.92E-06	4.20E-09	9.18E-12	2.01E-14	4.16E-17	2.17E-18	-1.83E-18
HO	1.04E-03	6.12E-05	2.87E-06	7.85E-09	1.60E-09	1.58E-09	1.58E-09	1.58E-09	1.58E-09
TOTALS	7.04E 03	6.16E 02	4.76E 02	3.57E 02	2.95E 02	2.55E 02	2.25E 02	2.02E 02	1.84E 02

E-2: Irradiation of HTGR Fuel Specimens

The amount of radioactivity involved in each experiment with irradiated HTGR fuel specimens is quite small. This can be illustrated by using the Ft. St. Vrain Reactor Post Irradiation Decay data shown in Tables E-2 and E-3. A typical experiment with this fuel would use one fuel stick, a graphite rod about 0.5 in. diam by 2 in. long containing about 2.7 grams of uranium and thorium which had cooled at least 150 days. Since the data in Tables E-2 and E-3 are given per metric ton (1×10^6 grams) of heavy metal charged, the values shown will have to be multiplied by 2.7×10^{-6} to give the curies per fuel stick. Thus, for a stick cooled 150 days, the heavy metal isotopes will contribute 1.94 curies and fission products will contribute 17.15 curies for a total of 19.08 curies. Since we anticipate that up to six sticks may be present in the cell at one time, the maximum activity present at any one time would be $\sim$115 curies.

Table E-2. Elemental Activity (curies) in Thorium Portion of HTGR Fuel

POST IRRADIATION TIME FOR THE THORIUM PART

POWER= 0.00Mw, BURNUP= 0.MWD, FLUX= 2.71E 13N/CM**2-SEC

NUCLIDE RADIOACTIVITY, CURIES
BASIS = ONE ELEMENT

	CHARGE	DISCHARGE	200.DY	360.DY	760.DY	3652.DY
H 3	0.0	1.44E-05	1.40E-05	1.37E-05	1.28E-05	8.22E-06
KR 85	0.0	9.57E-04	9.26E-04	9.00E-04	8.39E-04	5.05E-04
SR 89	0.0	3.03E-01	2.11E-02	2.50E-03	1.21E-05	2.19E-22
SR 90	0.0	3.51E-03	3.47E-03	3.43E-03	3.34E-03	2.75E-03
Y 90	0.0	3.60E-03	3.47E-03	3.43E-03	3.34E-03	2.75E-03
Y 91	0.0	2.76E-01	2.64E-02	4.00E-03	3.59E-05	5.61E-20
ZR 95	0.0	2.86E-01	3.39E-02	6.15E-03	8.63E-05	3.49E-16
NB 95M	0.0	5.85E-03	7.19E-04	1.30E-04	1.83E-06	7.40E-20
NB 95	0.0	2.06E-01	6.55E-02	1.30E-02	1.87E-04	7.57E-16
RU103	0.0	9.64E-02	2.91E-03	1.77E-04	1.61E-07	1.67E-29
RH103M	0.0	9.64E-02	2.91E-03	1.77E-04	1.61E-07	1.67E-29
RU106	0.0	3.23E-03	2.22E-03	1.64E-03	7.69E-04	3.26E-06
RH106	0.0	5.18E-03	2.22E-03	1.64E-03	7.69E-04	3.26E-06
CD115M	0.0	8.45E-05	3.37E-06	2.55E-07	4.04E-10	2.29E-30
SN123	0.0	1.51E-03	4.97E-04	2.05E-04	2.23E-05	2.42E-12
SB125	0.0	4.55E-04	4.25E-04	3.80E-04	2.87E-04	3.76E-05
TE125M	0.0	9.35E-05	1.66E-04	1.56E-04	1.19E-04	1.56E-05
SB126	0.0	5.54E-03	1.16E-07	1.57E-08	1.57E-08	1.57E-08
TE127M	0.0	4.34E-03	1.31E-03	4.75E-04	3.73E-05	3.73E-13
TE127	0.0	3.74E-02	1.30E-03	4.70E-04	3.69E-05	3.69E-13
TE129M	0.0	1.79E-02	3.06E-04	1.17E-05	3.37E-09	8.36E-35
TE129	0.0	1.30E-01	1.96E-04	7.52E-06	2.16E-09	5.36E-35
CS134	0.0	2.30E-04	1.91E-04	1.65E-04	1.14E-04	7.81E-06
CS136	0.0	3.26E-03	1.93E-07	3.81E-11	4.93E-19	0.0
CS137	0.0	3.64E-03	3.59E-03	3.55E-03	3.47E-03	2.89E-03
BA137M	0.0	3.40E-03	3.36E-03	3.32E-03	3.24E-03	2.70E-03
BA140	0.0	3.68E-01	7.27E-06	1.25E-09	1.40E-19	0.0
LA140	0.0	4.34E-01	8.37E-06	1.44E-09	5.65E-19	0.0
CE141	0.0	4.23E-01	5.90E-03	1.93E-04	3.70E-08	4.99E-35
PR143	0.0	3.88E-01	1.76E-05	5.37E-09	9.46E-18	0.0
CE144	0.0	8.56E-02	5.25E-02	3.55E-02	1.34E-02	1.15E-05
PR144	0.0	8.71E-02	5.25E-02	3.55E-02	1.34E-02	1.15E-05
ND147	0.0	1.36E-01	5.13E-07	2.35E-11	1.41E-20	0.0
PM147	0.0	1.01E-02	1.01E-02	9.01E-03	6.75E-03	8.31E-04
PM148M	0.0	6.40E-04	2.36E-05	1.69E-06	2.28E-09	4.27E-30
PM148	0.0	3.98E-03	1.90E-06	1.35E-07	1.84E-10	3.43E-31
SM151	0.0	2.72E-05	2.80E-05	2.79E-05	2.76E-05	2.59E-05
EU154	0.0	7.51E-06	7.34E-06	7.20E-06	6.86E-06	4.87E-06
EU155	0.0	4.92E-05	3.99E-05	3.38E-05	2.22E-05	1.07E-06
EU156	0.0	2.06E-03	2.01E-07	1.24E-10	1.55E-18	0.0
SUBTOT	0.0	3.44E 00	2.98E-01	1.26E-01	5.03E-02	1.25E-02
TOTALS	0.0	3.78E 01	2.98E-01	1.26E-01	5.03E-02	1.25E-02

Table E-3. Elemental Activity (curies) in Uranium Portion of HTGR Fuel

POST-IRRADIATION TIME FOR URANIUM PORTION

POWER= 0.00MW, BURNUP= 0.MWD, FLUX= 2.71E 13N/CM**2-SEC

NUCLIDE RADIOACTIVITY, CURIES
BASIS = ONE ELEMENT

	CHARGE	DISCHARGE	200.DY	360.DY	760.DY	3652.DY
H 3	0.0	2.07E-03	2.01E-03	1.96E-03	1.84E-03	1.18E-03
SE 79	0.0	1.72E-06	1.72E-06	1.72E-06	1.72E-06	1.72E-06
KR 85	0.0	6.18E-02	5.97E-02	5.80E-02	5.41E-02	3.25E-02
RB 86	0.0	2.06E-03	1.25E-06	3.32E-09	1.21E-15	0.0
SR 89	0.0	1.78E 01	1.24E 00	1.47E-01	7.11E-04	1.29E-20
SR 90	0.0	4.06E-01	4.01E-01	3.97E-01	3.86E-01	3.17E-01
Y 90	0.0	4.17E-01	4.01E-01	3.97E-01	3.86E-01	3.18E-01
Y 91	0.0	2.14E 01	2.04E 00	3.09E-01	2.77E-03	4.32E-18
ZR 93	0.0	8.57E-06	8.58E-06	8.58E-06	8.58E-06	8.58E-06
ZR 95	0.0	2.26E 01	2.68E 00	4.86E-01	6.82E-03	2.76E-16
NB 95M	0.0	4.67E-01	5.68E-02	1.03E-02	1.45E-04	5.85E-18
NB 95	0.0	2.18E 01	5.28E 00	1.03E 00	1.48E-02	5.98E-16
TC 99	0.0	5.59E-05	5.67E-05	5.67E-05	5.67E-05	5.67E-05
RU103	0.0	1.13E 01	3.40E-01	2.07E-02	1.90E-05	1.97E-27
RH103M	0.0	1.13E 01	3.40E-01	2.07E-02	1.90E-05	1.97E-27
RU106	0.0	5.94E-01	4.07E-01	3.01E-01	1.41E-01	6.00E-04
RH106	0.0	7.78E-01	4.07E-01	3.01E-01	1.41E-01	6.00E-04
AG110M	0.0	7.25E-05	4.19E-05	2.70E-05	9.04E-06	3.27E-09
AG110	0.0	6.38E-03	5.45E-06	3.52E-06	1.18E-06	4.26E-10
CD115M	0.0	2.53E-03	1.01E-04	7.64E-06	1.21E-08	6.88E-29
SN119M	0.0	6.19E-05	3.50E-05	2.28E-05	7.53E-06	2.48E-09
SN123	0.0	4.85E-02	1.60E-02	6.59E-03	7.17E-04	7.79E-11
SB124	0.0	3.52E-05	3.49E-06	5.50E-07	5.41E-09	1.67E-23
SB125	0.0	1.38E-02	1.24E-02	1.11E-02	8.36E-03	1.09E-03
TE125M	0.0	3.82E-03	4.94E-03	4.56E-03	3.46E-03	4.54E-04
SB126	0.0	7.89E-02	1.64E-06	4.35E-07	4.35E-07	4.35E-07
TE127M	0.0	8.98E-02	2.62E-02	9.48E-03	7.45E-04	7.70E-12
TE127	0.0	4.47E-01	2.59E-02	9.37E-03	7.37E-04	7.61E-12
TE129M	0.0	5.97E-01	1.02E-02	3.90E-04	1.12E-07	2.78E-33
TE129	0.0	3.35E 00	6.53E-03	2.50E-04	7.19E-08	1.78E-33
I131	0.0	1.05E 01	3.58E-07	3.72E-13	7.18E-26	0.0
XE131M	0.0	8.57E-02	2.13E-06	1.78E-10	-6.47E-19	0.0
CS134	0.0	5.35E-02	4.44E-02	3.83E-02	2.65E-02	1.82E-03
CS136	0.0	5.31E-02	1.24E-06	2.45E-10	-5.21E-19	0.0
CS137	0.0	4.06E-01	4.01E-01	3.97E-01	3.87E-01	3.22E-01
BA137M	0.0	3.80E-01	3.75E-01	3.71E-01	3.62E-01	3.01E-01
BA140	0.0	2.30E 01	4.55E-04	7.87E-08	3.13E-17	0.0
LA140	0.0	2.33E 01	5.23E-04	9.05E-08	3.59E-17	0.0
CE141	0.0	2.38E 01	3.32E-01	1.08E-02	2.08E-06	2.80E-33
PR143	0.0	2.12E 01	9.50E-04	2.90E-07	4.71E-16	0.0
CE144	0.0	1.06E 01	6.51E 00	4.40E 00	1.66E 00	1.43E-03
PR144	0.0	1.07E 01	6.51E 00	4.40E 00	1.66E 00	1.43E-03
ND147	0.0	8.59E 00	3.24E-05	1.50E-09	-5.86E-19	0.0
PM147	0.0	1.46E 00	1.35E 00	1.20E 00	9.01E-01	1.11E-01
PM148M	0.0	9.87E-02	3.64E-03	2.60E-04	3.54E-07	6.62E-28
PM148	0.0	5.77E-01	2.92E-04	2.09E-05	2.85E-08	5.32E-29
SM151	0.0	2.81E-03	2.85E-03	2.84E-03	2.82E-03	2.64E-03
EU152	0.0	1.90E-05	1.84E-05	1.79E-05	1.68E-05	1.06E-05
EU154	0.0	1.99E-03	1.94E-03	1.91E-03	1.82E-03	1.29E-03
EU155	0.0	5.28E-03	4.28E-03	3.62E-03	2.38E-03	1.15E-04
EU156	0.0	2.12E-01	2.06E-05	1.27E-08	1.19E-16	0.0
TB160	0.0	7.80E-05	1.14E-05	2.45E-06	5.24E-08	4.41E-20
SUBTOT	0.0	2.48E 02	2.93E 01	1.44E 01	6.15E 00	1.41E 00
TOTALS	0.0	1.95E 03	2.93E 01	1.44E 01	6.15E 00	1.41E 00

APPENDIX F

APPENDIX F: BUILDING 4507 VACUUM SYSTEM

F-1: General

A steam jet ejector was installed in Building 4507, replacing the former mechanical pump, to supply vacuum requirements for hot-cell experiments. A schematic drawing of the installation is shown in Fig. 19.

F-2: Operation of Vacuum System Startup

1. Open 1/2-in. 1PS valves on 80 psi process water supply (Fig. 19) to condenser (in Charging Area) and set bottom of FI rotameter at 2.0.
2. Open 1-in. gate valve on 80 psi steam supply to jet (in Makeup Area).
3. Open 1-1/2-in. ball valve (in Makeup Area) to the Vacuum Surge Tank.

F-3: Operation of Vacuum System Shutdown

1. Close 1-1/2 in. ball valve (in Makeup Area) to the Vacuum Surge Tank.
2. Close 1-in. gate valve (in Makeup Area) from 80 psi steam supply.
3. Close 1/2-in. valves on 80 psi process water supply to condenser.

F-4: Details

Steam Jet

A single-stage steam jet ejector, made from Type 316 stainless steel and sold by Penberthy Manufacturing Company, was used. The

ORNL DWG 66-61

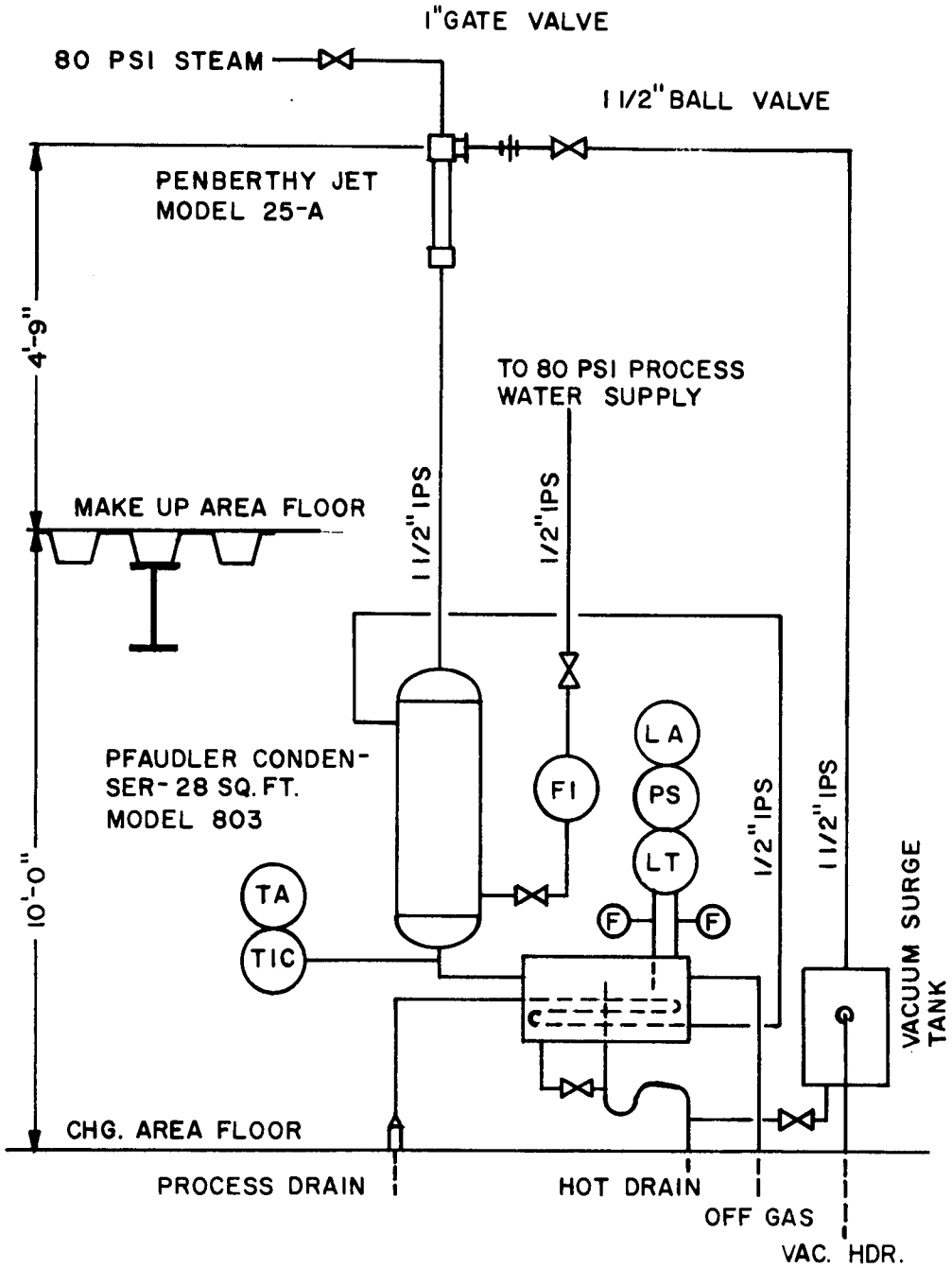

Fig. 19. Bldg. 4507 Steam Jet Building Vacuum Supply.

ejector is designated as Model 25-A and is rated to pump 16 lb/hr of dry air at 70°F for a suction pressure of 3 in. mercury absolute to a discharge pressure of 1 atm when supplied with 80 psig dry saturated steam. At these conditions, steam consumption will be 3.9 lb/min or 234 lb/hr. The ejector is supplied with special internal jets to obtain the desired performance and is fitted with a 1-in. NPS screwed steam connection, a 1-1/2-in. NPS screwed suction connection, and a 1-1/2-in. NPS screwed discharge connection. It is 16-7/8 in. overall length and belongs to the type designated as "20A Ejectors" shown in Bulletin 200 of the Penberthy Manufacturing Company. It was purchased in 1965 under ORNL Purchase Order No. 95X-7855.

Condenser

A surplus shell and tube heat exchanger, already owned by Chemical Technology Division, was located in storage. The condenser is described by the following:

Manufacture: Pfaudler Permutit, Inc.

Model: 803

Length: 3 ft

Shell: 8-in. NPS carbon steel pipe

Tubes: 3/4-in.-diam, 0.065-in. wall, Type 316 stainless steel; 48 tubes total on a 1-in. triangular pitch

Shell nozzles: one 1-1/2-in. NPS; one 2-in. NPS

Heat transfer area: 28 ft^2

Pfaudler drawing No.: 57470

The exchanger bears ORNL property No. X-62082 and was purchased in 1955 for the Metal Recovery Process under Purchase Order No. 29X-6362.

A heat transfer calculation was made on the exchanger using an overall heat transfer coefficient (U) of 144 Btu hr^{-1} ft^{-2} $°F^{-1}$, as recommended by those having experience with condensing vapors that contain 10% noncondensibles. Steam from the jet was assumed to condense and cool from 212 to 100°F, and the countercurrently flowing cooling water was assumed to rise from 50 to 100°F, leading to a log mean ΔT of 77°F. Using these data, the Q(Btu/hr) was calculated to be 310,000. This will adequately cool the 234 lb/hr of steam stated by manufacturer's literature as required, and, in fact, preliminary tests indicate adequate cooling. The condensed steam is sent through the seal water tank retained from the original vacuum pump installation for further cooling prior to discharge into the building hot drain.

Drawings

The drawings made for the steam jet system were:

P-12158-CD-232-D	(58167D) Condenser Detail for Jet Vacuum Station, 4507
P-12158-CD-233-E	(58168E) Steam Reducing Station and Steam Jet Vacuum Station 4507

APPENDIX G

APPENDIX G: OPERATION OF BUILDING 4556 CELL VENTILATION AND FILTRATION FACILITY

The Building 4556 cell ventilation and filtration facility, located 60 ft west of Building 4507, was designed by the ORNL General Engineering and Construction Division and was built by Rust Engineering Company in the summer of 1972. The detailed engineering and construction drawings for the facility are No.'s H-21230-EG-001-D through EG-009-D, EB-003-D through EB-5D, ED-001-D through ED-002-D, EA-001-D, and C-21230-EA-001-D

Brief operational procedures for the facility are:

1. Startup

   a. Open metal hatch over stairway to 4556.

   b. Turn on ventilating fan using switch on west edge of hatch.

   c. Turn on lights using switch on west edge of hatch.

   d. Turn switch (SW-1) to OFF position.

   e. Turn on main electrical disconnects (Fig. 20) for:

      Exhaust Fan No. 1 (east) EF-1

      Exhaust Fan No. 2 (west) EF-2

      Transformer Disconnect

      Transformer Disconnect

   f. Open butterfly valves at inlets and outlets of filter housings.

   g. To Run EF-1 and hold EF-2 in STANDBY:

      (1) Turn SW-1 to left, labelled EF-1 on, EF-2 standby. (EF-2 will start running.)

      (2) Push START RESET (PB-3) button. (EF-1 will start running, EF-1 pilot light will burn on 4556 control panel and in 4507, and EF-2 will be in standby.)

ORNL DWG 73-8629

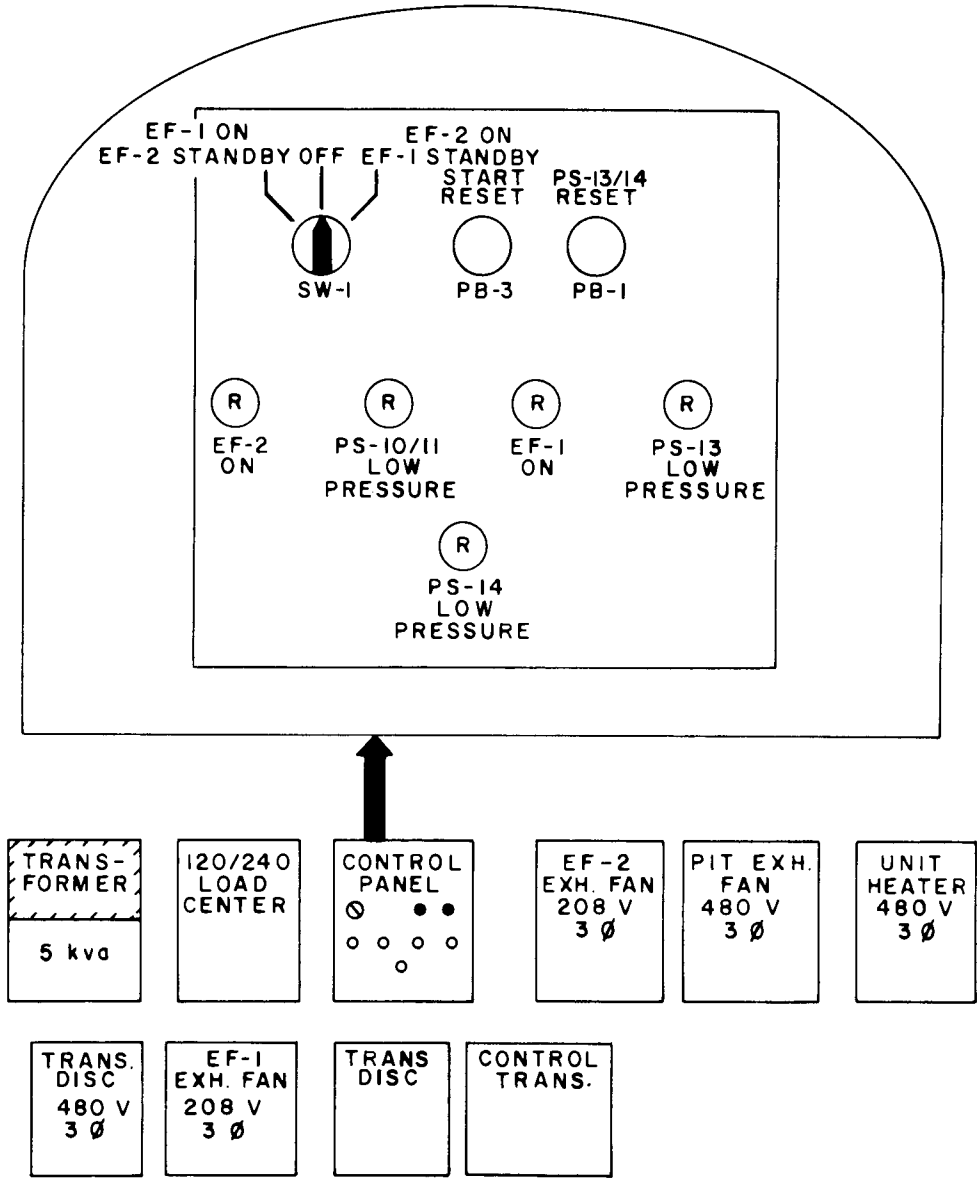

Fig. 20. Electrical Controls, Bldg. 4556 Filter Pit.

(3) Wait 30 seconds for time delay relay to operate (nothing should happen).

h. To Run EF-2 and hold EF-1 in STANDBY:

(1) Turn SW-1 to right, labelled EF-2 ON, EF-1 STANDBY (EF-1 will start running).

(2) Push START RESET (PB-3) button. (EF-2 will start running, EF-2 pilot light will burn on 4556 control panel and in 45 07, and EF-1 will be in standby.)

(3) Wait 30 seconds for time delay relay to operate (nothing should happen).

i. Close BYPASS butterfly valve.

j. Observe pressures and vacuum on gages.

k. Turn off lights, ventilating fan, close hatch.

2. Manual Shutdown of Fans

a. Open BYPASS butterfly valve to maintain ventilation in 4507.

b. Turn SW-1 to OFF position; fan will stop.

c. Close butterfly valves at inlets and outlets of filter housings.

3. Automatic Shutdown of Fans

a. Low Fan Suction (PS-10/11)

(1) Pressure switches PS-10 and PS-11, which measure the vacuum at the inlets of the fans, are set to operate at -2.0-in. of water (normal operating vacuum is about -5.6 in. of water). When the fan suction falls to less than -2.0 inches, the operating fan will automatically stop and the standby fan automatically start. (The caution light operates at -3.0 in. water.)

(2) Loss of fan suction may be due to:

(a) Loss of electric power to blower motor

(b) Failure of electric motor parts

(c) Broken belt drive to blower

(d) Motor or blower bearing trouble.

(3) If this happens, the following will occur:

(a) PS-10/11 LOW PRESSURE Telealarm and lights will give audible and visual signals at 4556 control panel, 4507 central control panel, and Shift Patrol Headquarters.

(b) Standby fan running alarm and lights will give audible and visual signals at 4507 central control panel and Shift Patrol Headquarters.

(c) The standby fan pilot light (EF-1 or EF-2) will turn on at 4507 and 4556 control panels.

(4) If the blowers switch automatically, do the following:

(a) Go to 4556 and determine why the fans switched.

(b) Determine whether repairs may be made easily; notify supervision if repairs are necessary.

(c) If no repairs are needed, attempt to restart the operating fan using procedure above (Appendix G-1). Observe operation to be sure the fan will continue in service.

(d) Clear all lights at 4507 central control panel.

b. Low Stack Vacuum (PS-13/-14)

(1) Pressure switches PS-13 and PS-14, which measure the vacuum in the duct at the discharge side of the blowers,

reflect the operation of the 3039 stack and the various facilities between 4556 and the stack. Normal vacuum in the duct produced by the electrically driven motors at 3039 is about 2.2 in. of water and about 1.8 in. of water when the steam-driven fans are operating. If the vacuum in the duct falls to less than -0.5 in. of water, the operating fan in Bldg. 4556 will automatically stop to prevent pressurization of the duct; the standby fan will also not operate. (A caution light will operate at -0.8-in. water.)

(2) Loss of duct vacuum may be due to:

(a) Electric motor failure at 3039

(b) "Steam-jenny" failure at 3039

(c) Massive air-leak into duct

(3) If the duct loses vacuum and the 4556 fans stop, the following will occur:

(a) PS-13/-14 low stack vacuum telealarm and lights will give audible and visual signals at 4556 control panel, 4507 central control panel, and at shift patrol headquarters.

(b) PS-10/-11 low pressure telealarm and lights will give audible and visual signal at 4556, 4507, and shift patrol headquarters.

(c) All telealarms on cell and building ventilation system will give audible and visual signals on 4507 central control panel.

(d) Both EF-1 and EF-2 pilot lights will be dark.

(4) If both 4556 blowers stop because of low stack vacuum, do the following:

(a) Push PS-13/-14 RESET button (PB-1) on Bldg. 4556 control panel or PS-13/-14 REMOTE RESET button (PB-2) on Bldg. 4507 central control panel to attempt to restart the fans.

(b) If the operating fan in 4556 does not start, or starts and stops again because of continued high pressure in the duct, put Bldg. 4507 into containment by pushing the MANUAL CONTAIN button on the 4507 central control panel.

(c) Push SILENCE KLAXON button to stop alarms.

(d) Use PA system to announce building evacuation for unnecessary personnel.

(e) Cover air inlets to cells and glove boxes to increase available vacuum.

(f) Open BYPASS valve in Bldg. 4556.

(g) When vacuum in duct has been restored, push PS-13/-14 RESET button to start for operation. Close bypass valve.

(h) Remove 4507 from containment, uncover air inlets, etc., and resume normal operation.

(i) Check condition of fans, vacuum, pressure drops, etc., in Bldg. 4556.

c. High Vacuum in Bldg. 4556 (PS-20)

(1) Pressure switch PS-20, located in Bldg. 4556, serves to shut off the 575 cfm pit ventilation fan in order to prevent the vacuum in Bldg. 4556 from becoming greater than 1/2 in. of water. This is a safety device to keep the building vacuum from becoming so great that the hatch doors cannot be opened by a person inside the building.

4. Changing Filters in 4556

a. Roughing and absolute filters will be changed when the pressure drop across the filters increases to the point that the vacuum in the cells is less than -0.75-in. water or when the radioactivity level at the filter housings increases to the point of creating an unnecessary hazard of exposure to operating and maintenance personnel.

b. Contaminated filters will be bagged out of the filter housings using established procedures for handling radioactive objects. Health Physcis surveillance is required during filter changes.

c. The filters in only one unit will be changed at a time; normal cell ventilation air will be pulled through the other bank of filters during the change.

d. Containment of the filters in the housings will be maintained using bags and rings on the bag ports.

5. Fire Barriers

a. Fire barriers are located in the stainless steel duct elbows just above the filter housings.

b. If the pressure drop across the fire barriers increases, the screens may be inspected through an observation port in the elbow of the duct. The port is protected by a metal containment plate bolted over the safety glass.

c. The fire barriers may be bagged - one at a time - out of the ducts, if clogged; and sent to another area for cleaning and decontamination. A temporary end plate for the ducts should be bolted over the bag closure while the fire barrier is removed. The air flow should be diverted through the other bank of filters during the cleaning operation by closing the inlet valve.

6. Operating Data for Blowers

a. Figure 21 describes the performance characteristics of the Size 1S Type ACF New York Blower fans in Bldg. 4556.

b. Figure 22 shows the volume of air moved by the Bldg. 4556 blowers versus the differential pressure as indicated at the control panel.

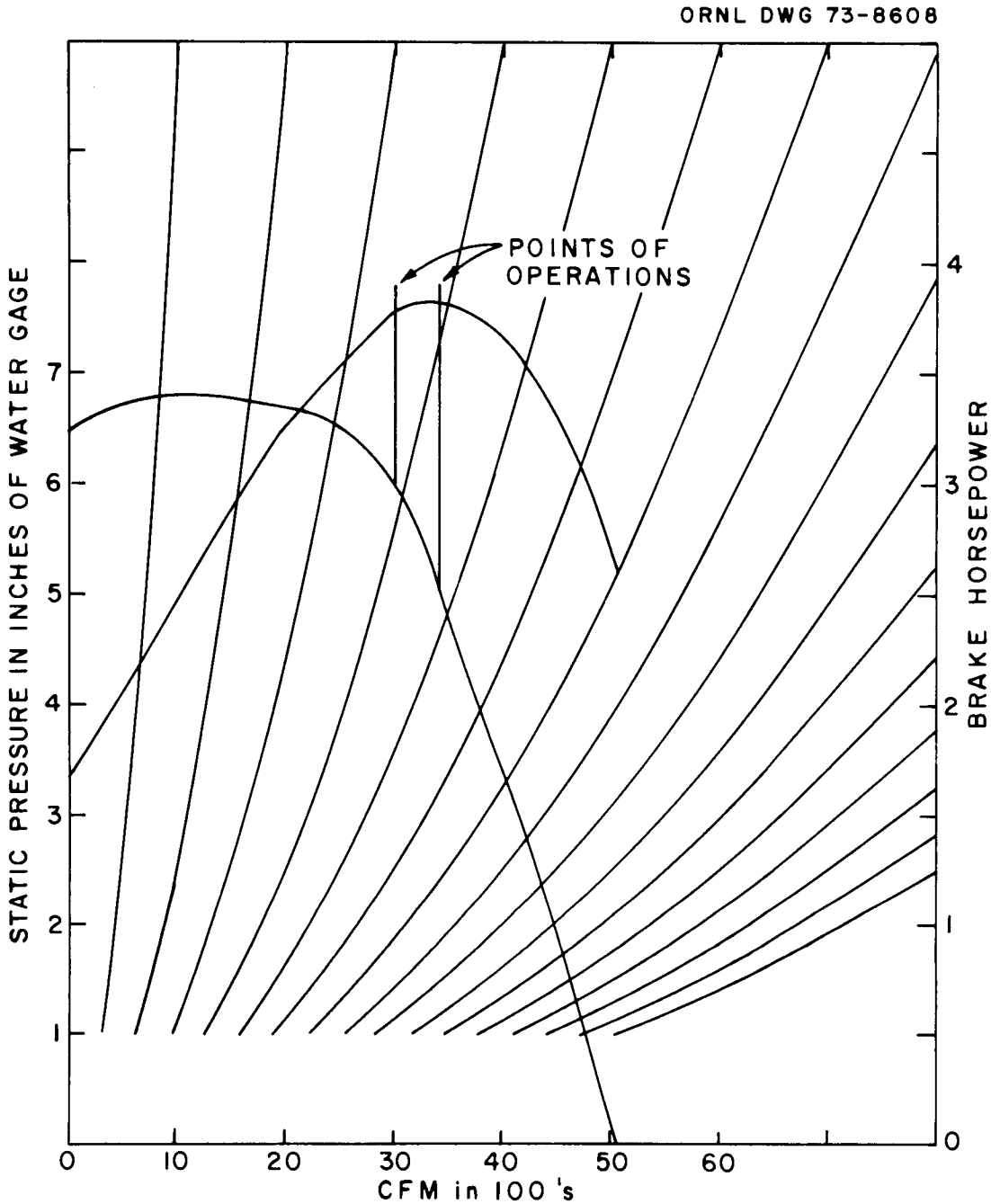

Fig. 21. Performance Characteristics of New York Blower Fan (Size 15, Type ACF, 3015 rpm).

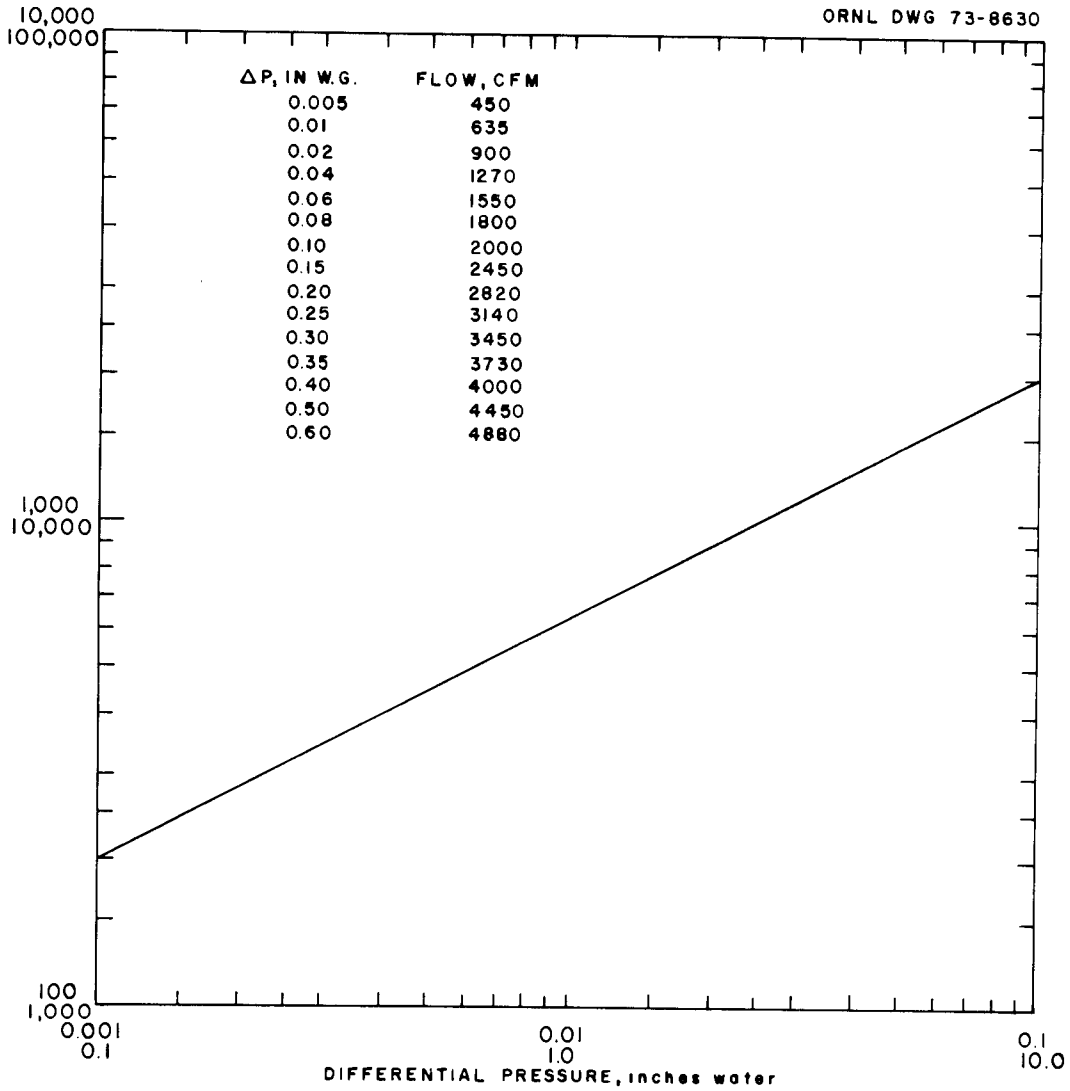

Fig. 22. Bldg. 4556 Air Flow vs. Differential Pressure.

DISTRIBUTION

1-9. R. G. Affel
10. T. A. Arehart
11. E. S. Bomar
12. R. E. Brooksbank
13. K. B. Brown
14. F. R. Bruce
15. T. G. Clark
16. F. L. Culler
17. D. E. Ferguson
18-22. C. L. Fitzgerald
23-32. J. H. Goode
33. J. H. Greene
34. P. W. Hembree
35. W. B. Howerton
36. J. E. Kahn
37. O. L. Kirkland
38. R. E. Leuze
39. B. Lieberman
40. J. C. Mailen
41. A. P. Malinauskas
42. L. E. McNeese
43. J. P. Nichols
44. K. J. Notz
45. J. B. Ruch
46. R. W. Schaich
47. C. D. Scott
48. E. L. Sharp
49. D. B. Trauger
50. V. C. A. Vaughen
51. B. T. Walters
52. E. J. Witkowski
53. R. G. Wymer
54-55. Central Research Library
56. Document Reference Section
57-58. Laboratory Records Department
59. Laboratory Records Department-RC