LOCKHEED MARTIN ENERGY RESEARCH LIBRARIES

3 4456 0448635 8

ORNL-5000

A Tabulation of Dose Equivalent per Microcurie-Day for Source and Target Organs of an Adult for Various Radionuclides

W. S. Snyder
Mary R. Ford
G. G. Warner
Sarah B. Watson

OAK RIDGE NATIONAL LABORATORY
CENTRAL RESEARCH LIBRARY
CIRCULATION SECTION
4500N ROOM 175

LIBRARY LOAN COPY
DO NOT TRANSFER TO ANOTHER PERSON.
if you wish someone else to see this report, send in name with report and the library will arrange a loan.

ORNL-118 (6-97)

OAK RIDGE NATIONAL LABORATORY
OPERATED BY UNION CARBIDE CORPORATION • FOR THE U.S. ATOMIC ENERGY COMMISSION

Printed in the United States of America. Available from
National Technical Information Service
U.S. Department of Commerce
5285 Port Royal Road, Springfield, Virginia 22161
Price: Printed Copy $10.60; Microfiche $2.25

This report was prepared as an account of work sponsored by the United States Government. Neither the United States nor the United States Atomic Energy Commission, nor any of their employees, nor any of their contractors, subcontractors, or their employees, makes any warranty, express or implied, or assumes any legal liability or responsibility for the accuracy, completeness or usefulness of any information, apparatus, product or process disclosed, or represents that its use would not infringe privately owned rights.

ORNL-5000
UC-41 — Health and Safety

Contract No. W-7405-eng-26

HEALTH PHYSICS DIVISION

A TABULATION OF DOSE EQUIVALENT PER MICROCURIE-DAY FOR SOURCE AND TARGET ORGANS OF AN ADULT FOR VARIOUS RADIONUCLIDES

W. S. Snyder, Mary R. Ford, G. G. Warner, and Sarah B. Watson

NOVEMBER 1974

OAK RIDGE NATIONAL LABORATORY
Oak Ridge, Tennessee 37830
operated by
UNION CARBIDE CORPORATION
for the
U.S. ATOMIC ENERGY COMMISSION

LOCKHEED MARTIN ENERGY RESEARCH LIBRARIES
3 4456 0448635 8

Preface

This report contains a description of the procedures used in estimating average dose equivalent to the various target organs as well as data on 60 radionuclides. It is planned to issue supplementary volumes in this same series until tabulations for the majority of radionuclides of interest to health physicists have been published. However, subsequent volumes will not include the text unless there have been changes in the procedures. The index for each volume will include all radionuclides for which tabulations have been published with an indication of the volume of the series in which the latest tabulation may be found. The authors are deeply conscious of the fact that many of the approximations made may not be the best in an absolute sense and will welcome constructive suggestions for their improvement.

The authors gratefully acknowledge the many hours of work of James Hickey who prepared the figures and of Sally Stockstill who typed and helped edit the report.

CONTENTS

	Page
Preface	iii
Abstract	1
Introduction	1
Decay Scheme Data	4
Absorbed Fractions for Photons	4
Electrons and Beta Rays	6
Alpha Particles and Recoil Nuclei	14
Additivity of S	16
Arrangement of Tables	19
Limitations	20
Appendix I, Description of the Mathematical Phantom	24
Composition of the Phantom	24
Description of the Phantom and Organs	27
Exterior of the Phantom	27
Organs	30
Appendix II, The Monte Carlo Technique	52
Statistics	54
Appendix III, Special Techniques for Estimating Specific Absorbed Fractions	57
Introduction	57
Method Using the Buildup Factor	57
Discussion	60
Other Approximate Techniques for Obtaining Absorbed Fractions	64
Muscle and Fat	65
Bone and Red and Yellow Marrow	66
Urinary Bladder	67
Extrapolation of the Specific Absorbed Fraction	68
Table A-3. Specific Absorbed Fraction of Photon Energy	71

List of Abbreviations Used in the Tables 93
Table 2; S, Average Dose Equivalent per Unit Accumulated Activity . . . 95

A TABULATION OF DOSE EQUIVALENT PER MICROCURIE-DAY FOR SOURCE AND TARGET ORGANS OF AN ADULT FOR VARIOUS RADIONUCLIDES

W. S. Snyder Mary R. Ford G. G. Warner* Sarah B. Watson*

ABSTRACT

A tabulation is presented of the average dose equivalent in various target organs per microcurie-day of activity in a source organ. For each radionuclide and each source and target organ, the dose equivalent due to photons, electrons, alpha particles, and recoil nuclei is given, each computed with the appropriate quality factor recommended by ICRP and NCRP. The total dose equivalent is listed also. Source organs include cortical bone, cancellous bone, and active bone marrow as well as other organs usually of concern to health physicists. Bone as a whole, endosteal cells (taken to lie within 10 μm of endosteal surfaces), red (active) marrow, and yellow marrow are indicated as target organs in addition to the organs usually considered in radiation protection programs. The absorbed fractions of photon energy have been recomputed using the methods developed in MIRD Pamphlet No. 5 but are based on a somewhat more realistic phantom than that used in the earlier calculation. When the Monte Carlo calculation did not give a sufficiently accurate result, various approximate procedures were used, and these are described. The tabulation is convenient to use because it avoids separate consideration of each product of the decay scheme and does not imply any restriction on the metabolic model to be used. However, the sources are considered to be uniformly distributed in the source organ, and only an average dose equivalent in the target organ is estimated.

INTRODUCTION

The energy expression used in computing dose equivalent (or MPC values) recommended by the National Committee on Radiation Protection (NCRP, 1959) and the International Commission on Radiological Protection (ICRP, 1959) is generally referred to as the effective energy. This effective energy is the weighted energy absorbed in an organ per disintegration of the radionuclide, the weighting factors being those related to the biological effectiveness of the

*Computer Sciences Division

radiation, the LET, or other conditions of exposure. The values tabulated here correspond in principle to these effective energy values, being the dose equivalent to the target organ for 1 μCi-day ($\sim 3.2 \times 10^9$ disintegrations) in the source organ. Thus, the tabulated quantity, termed S, may be used to obtain an average dose equivalent in the target organ by the simple formula

$$DE = U \times S \quad \text{(rem)} \tag{1}$$

where U represents the time integral of activity in the source organ, expressed in microcurie-days, and S is the dose equivalent per microcurie-day tabulated in this report for the source and target organs and nuclide considered. Thus S, more precisely $S(X \leftarrow Y)$, for a given source organ Y and target organ X, is given by

$$S = 51.15 \sum_i f_i \bar{E}_i \Phi_i (X \leftarrow Y) Q_i (X) N_i (X) \quad \text{(rem/μCi-day)} \tag{2}$$

where 51.15 = (g-rads/MeV) x (disintegrations/μCi-day), $\bar{E}_i$ is the average energy or unique energy of the i-th type of particle, f_i is the yield in particles of type i per disintegration, $\Phi_i(X \leftarrow Y)$ is the specific absorbed fraction of energy (or fraction of energy absorbed per gram of the target organ) for i-th type particles and for the source and target organs considered, and $Q_i(X)$ and $N_i(X)$ are the appropriate quality factor and modifying factor for i-type radiation in the target organ. The weights of the organs used in the phantom are specified in Table 1.

Actually, the tabulated values of S are much more general than the effective energy values given by NCRP and ICRP in that a value of S is given when the source and target organs are distinct. Sometimes this may be a significant alteration of the dose pattern obtained if radiation is restricted to the source organs. Generally, only the photons will make a contribution to this dose if the organs are well separated, but for tissues in close proximity (e.g., bone and active bone marrow) the contribution of electrons or beta rays should not be ignored.

The use of the quality factor, Q, and modifying factors is a convenience for the health physicist who usually will be interested in estimating dose equivalent

Table 1. Body Organs Used in this Report and in the Phantom with Masses from the Reference Man Report

Body Organs	Mass (g)	
	Reference Man Report	Phantom
Adrenals	14	15.5
Bladder	45 wall; 200 contents	45.13 wall; 200 contents
Gastrointestinal tract		
stomach	150 wall; 250 contents	150 wall; 246.9 contents
small intestine-contents	640 wall; 400 contents	1044 wall plus contents
upper large intestine	210 wall; 220 contents	109.2 wall; 220 contents
lower large intestine	160 wall; 135 contents	160.1 wall; 136.8 contents
Kidneys (both)	310	284.2
Liver	1,800	1,809
Lungs (both, with blood)	1,000	999.2
respiratory lymph nodes	15	15
Other tissue	48,000	48,480 (28,000 g suggested for muscle; 12,500 g for separable adipose tissue)
Ovaries (both)	11	8.268
Pancreas	100	60.27
Skeleton	10,000	10,470
cancellous bone	1,000	1,000
cortical bone	4,000	4,000
red bone marrow	1,500	1,500
yellow bone marrow	1,500	1,500
Skin	2,600	2,833
Spleen	180	173.6
Testes	35	37.08
Thymus	20	24.8
Thyroid	20	19.63
Uterus	80	65.4
Total body	70,000	69,880

or dose commitment. For any nuclide which does not produce alpha particles, Q = 1, and the results are equivalent to doses in rads. The user who wishes to compute an absorbed dose in rad will find it an easy task to convert from the values listed to the appropriate values for alpha particles and recoil ions. These adjustments and the basis of the estimates given are outlined below in some detail.

DECAY SCHEME DATA

Estimation of the energy absorbed by an organ implies knowledge of all the energy emitted; but the usual decay schemes found in compilations of decay data (for example, the compilation by Lederer et al., 1967) do not include radiations such as x-rays and Auger electrons resulting from rearrangements in the electron shells, and these contributions are quite tedious to compute. Fortunately, Dillman (1969, 1970, 1974) has published detailed decay data of the kind required for calculations of dose together with average beta energies for many radionuclides of interest, and he has designed a computer code which produces these data. It is this code which is used to produce the decay data used in this compilation.

ABSORBED FRACTIONS FOR PHOTONS

Apart from the difficulty involved in arriving at a complete listing of all radiations emitted per decay, considerable tedious calculations may be required to compute the total energy absorbed in body organs, particularly for photons. Snyder et al. (1969) have published in MIRD Pamphlet No. 5 absorbed fractions (AF) of photon energies for 12 monoenergetic photons ranging in energy from 0.01 to 4 MeV and distributed uniformly in each of 16 source organs of a mathematical anthropomorphic phantom whose organs approximate those of their prototypes in size, shape, composition, and density. A Monte-Carlo-type computer code was used in estimating the absorbed fraction for some 20 target organs. However, the estimates were judged to be statistically unreliable for some organs, and in such cases no value was given in MIRD Pamphlet No. 5. Thus, when the data are adequate, absorbed fractions for various organs can be estimated for many photons emitted in the decay of a particular radionuclide by interpolating on energy. Also, there may be many photons emitted per disintegration, and dose may be

required for a variety of source organs to many target organs. For example, if a radionuclide emits 10 x-rays and 4 gammas (not an unusual case) and is present in 6 source organs, 84 simple multiplications and interpolations are required in the table of absorbed fractions (MIRD Pamphlet No. 5) to determine the total photon contribution for just one target organ. If there are a number of target organs, these calculations become quite lengthy, and the tendency in this event could be to neglect the low-energy low-intensity emissions. While any such photon alone might make a negligible contribution to the overall dose, taken together all such emission in a decay may be quite significant.

The absorbed fractions for photons used in calculating S were obtained by two methods. The primary method was by use of the Monte Carlo technique, and all organ pairs where the coefficient of variation ($CV = 100\,\sigma_{\phi}/\phi$) did not exceed 50% were accepted on this basis. Detailed descriptions of the phantom and the Monte Carlo method of calculation are given in Appendices I and II. The second method makes use of the buildup factor reported by Berger (1968) in MIRD Pamphlet No. 2, and an absorbed fraction is computed for all organ pairs failing to meet the criterion mentioned above ($CV \leqq 50\%$). For the Monte Carlo technique a sample size of 60,000 photons was programmed for each computation.

The Monte Carlo technique seems to provide the only method available which takes account approximately of the size, shape, position, density, and composition of the various organs. The buildup factor method does not properly take into account either the density or the composition and, accordingly, is used only for situations where the Monte Carlo data did not meet the criterion mentioned above. From experience in studying estimates obtained by the Monte Carlo method for many organ pairs in successive runs, it is believed that when the coefficient of variation exceeds 50%, the result cannot be trusted within a factor of 2 to 5; and we estimate that the values obtained by use of the buildup factor generally would be expected to be more accurate than this. This method of obtaining a specific absorbed fraction is presented in Appendix III. Generally, the buildup factor method required only a sample of 30,000 photons. The table of specific absorbed fractions used in the calculation of S values is given in

Appendix III, and all values not obtained by the Monte Carlo calculation in the phantom are indicated. Other special techniques used for certain organs, e.g., bone and bladder, are also discussed in Appendix III.

ELECTRONS AND BETA RAYS

For electrons, positrons, and beta rays, the energy contributions of this short-range radiation are generally taken equal to 0 if the source and target organs are separated or to $\bar{E}$ (the average or unique energy of the electron) if they coincide. Among exceptions to this general rule are the organs with walls when the source is in the contents. This occurs in the four sections of the GI tract as well as in the case of the urinary bladder. In all such cases, the energy contribution is taken as $\bar{E}/2$ where $\bar{E}$ is the average energy of the beta or positron or equals the energy in the case of a monoenergetic electron. This amounts to using the dose on the surface of a half-space containing the source at a uniform concentration equal to that in the source tissue. Certainly this appears to be conservative for the GI tract in that the critical cells frequently are taken to be the mitosing cells which lie at some depth in the tissue and may be partially shielded by a layer of mucus.

The contributions of electrons, positrons, and beta rays to the active bone marrow and to the endosteal cells are based on calculations of Spiers (1968, 1973). The ICRP (1968) has recommended that osteogenic cells, assumed to lie within 10 μm of endosteal surfaces, be considered the radiosensitive cells for exposure to bone. The estimates of Spiers, shown in Fig. 1, are expressed as the ratio of the desired doses, D_S (endosteal cells), $\bar{D}_M$ (active bone marrow), to a dose D_0, representing the dose to a microscopic mass of soft tissue embedded in bone and farther from the boundary than the range of the electrons. This dose is computed assuming complete absorption of the energy of the emitted electron. These ratios D_S/D_0 and $\bar{D}_M/D_0$, which are independent of the level of activity assumed in the bone, averaged over cortical and cancellous bone have been given by Spiers for the following radionuclides: ^{90}Y ($\bar{E}$ = 0.927), ^{90}Sr ($\bar{E}$ = 0.200), ^{14}C ($\bar{E}$ = 0.049), ^{45}Ca ($\bar{E}$ = 0.076), ^{22}Na ($\bar{E}$ = 0.218), ^{18}F ($\bar{E}$ = 0.253),

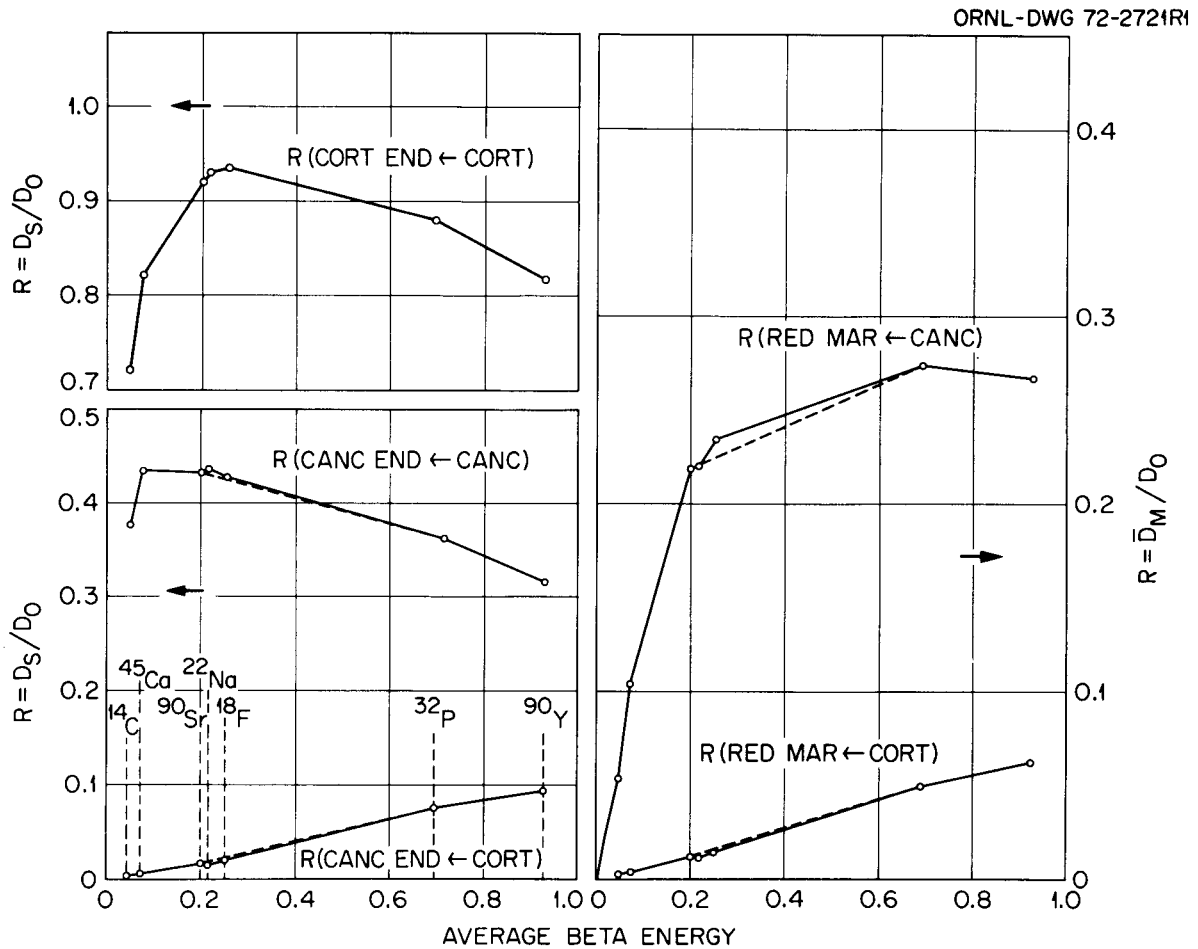

Fig. 1. Ratios of average endosteal dose and of average red marrow dose to the equilibrium dose in bone from beta emitters (Data from Spiers).

and ^{32}P ($\bar{E}$ = 0.695). Estimates for other beta emitters are interpolated or extrapolated on the basis of $\bar{E}$. In some cases the values for some of these radionuclides were quite close, and in these calculations the interpolation was done using the dashed line (shown in Fig. 1).

The dose rate, D_0, due to electron or beta radiation in a small mass of soft tissue is given by

$$D_0 = 51.15 \times 1.075 \times CM \times \frac{\Sigma f \bar{E}}{M} \quad \text{(rad/day)}, \tag{3}$$

where C is the concentration of the electron emitter (μCi/g) uniformly distributed in a mass M of bone, the constant 1.075 represents the ratio of stopping powers of bone and soft tissue, and $\bar{E}$ is the average energy of the beta (or unique energy for electrons), and it is supposed that the dose applies at distances from a boundary which are greater than the range of the electrons. The dose to a target organ X, which might be active marrow (red), endosteal cells on cancellous bone (E_{canc}), or endosteal cells on cortical bone (E_{cort}), corresponding to 1 μCi-day in the source organ Y, which might be either cortical or cancellous bone, is given by

$$S = \Sigma D_0(E_i) R_i(X \leftarrow Y) = 51.15 \times 1.075 \times 1 \times \frac{\sum_i f_i \bar{E}_i R_i(X \leftarrow Y)}{M_Y} \tag{4}$$

(rad/μCi-day),

the summation being over the electrons or beta rays emitted per disintegration with f_i, the corresponding yield, and R_i, the appropriate ratio D_S/D_0 or $\bar{D}_M/D_0$. In the formulas programmed for the computer for beta rays and electrons, one only needs to program $1.075\ R_i/M_Y$ explicitly since the computer will supply f_i and $\bar{E}_i$ from the decay scheme data and will then multiply the total by 51.15. In this case, the specific absorbed fraction of energy

$$\Phi_i(X \leftarrow Y) = 1.075\ R_i(X \leftarrow Y)/M_Y. \tag{5}$$

The printed values of S will be for total endosteal cells, E_{bone}, as the target rather than giving endosteal cells separately for those on cortical bone surfaces and those on cancellous bone surfaces. This is taken as a simple average since

the surface areas are approximately equal. Using E_{bone} to denote total endosteal cells,

$$S(E_{bone} \leftarrow cort) = 51.15 \times 1.075 \times \frac{1}{2} \Sigma f_i \bar{E}_i \left\{ R_i (E_{cort} \leftarrow cort) + R_i (E_{canc} \leftarrow cort) \right\} / M_{cort} \quad (6a)$$

and

$$S(E_{bone} \leftarrow canc) = 51.15 \times 1.075 \times \frac{1}{2} \Sigma f_i \bar{E}_i R_i (E_{canc} \leftarrow canc) / M_{canc} \quad (6b)$$

where cort and canc are abbreviations for cortical bone and cancellous bone, respectively. It will be noted that while the concentration in cortical bone makes a small contribution to the dose received by the endosteal cells on cancellous bone, Spiers has not given a comparable contribution from cancellous bone to endosteal cells on cortical bone, and this is assumed to be negligible here. Formulas (4), (5) and (6) summarize the results directly due to the work of Spiers, that is, with cancellous bone or cortical bone as source and with active marrow (red) or endosteal cells as target.

For electron or beta emitters in the skeleton, we consider four possible source tissues--cortical bone, cancellous bone, active bone marrow and yellow bone marrow--and these will be symbolized here by cort, canc, red, and yellow, respectively. Since cortical bone and cancellous bone have not been localized in the representation given in the phantom and quantitative data are scarce, it was decided only to attempt an estimate of dose to bone as a whole. The bone, as used here, is equivalent to mineral bone or hard bone (mass, 5,000 g in the Reference Man Report) (ICRP, in press). It does not include cartilage, which has a mass of $\sim$ 1,100 g, because what data are available generally indicate the concentration of bone-seekers in cartilage is low compared with the concentration in mineral bone. In addition to bone and red and yellow marrow as the three target tissues comprising the skeleton, there is a fourth target tissue, namely, endosteal cells near bone surfaces (E_{bone}). The choice of these

target tissues is, in part, due to the data of Spiers mentioned above which provide valuable detail on the distribution of dose to the red marrow and to endosteal cells. Also, the metabolic model developed by John Marshall and the ICRP Task Group on Aklaline Earth Metabolism in Adult Man (ICRP, 1973) supplies the metabolic data on the alkaline earth elements which are needed to implement the dosimetry of Spiers.

The values of $\Phi(X \leftarrow Y)$ must be specified with Y as the source tissue (taken as cort, canc, red, or yellow) and with X as target tissue (taken as bone, E_{bone}, red, or yellow). This will complete the dosimetric schema for electrons and betas if the 16 values of Φ can be specified. Needless to say, this can only be done approximately in the present state of our knowledge, but the values presented here, while often involving errors of 10-15%, seem to offer a plausible first approximation for a dosimetric model. It is important to develop such a model since there are radionuclides known which concentrate in one or other of the above source tissues; for example, ^{14}C, as well as several of the noble gases, is known to be present in the yellow marrow (essentially fat) to a greater extent than in most tissues of the body following an exposure. Nevertheless, the reader should not expect great accuracy from the formulas developed here and is again reminded that these are developed only for sources considered to be distributed uniformly in the source tissues, and the values only purport to lead to an average dose to the target tissue.

Now consider that cancellous bone and red bone marrow are contaminated at the same level--say, 1 μCi per gram--by a beta or electron emitter of a single energy--say, $\overline{E}_i$ with yield f_i. Then, assuming that the loss of energy to the yellow marrow and to cortical bone is small, one has

$$51.15 \times f_i \overline{E}_i \quad \text{(rads/day)} \tag{7}$$

as the corresponding dose rate to cancellous bone and to red marrow and also to endosteal cells present on cancellous bone surfaces. Subtracting the dose contributed from cancellous bone to the red marrow as given by (4), one obtains the dose to these tissues from a source in the red marrow. Thus one obtains for

an electron or beta ray of yield f_i per disintegration in red marrow the expression

$$51.15\, f_i \bar{E}_i - 51.15 \times 1.075\, f_i \bar{E}_i R_i (\text{red} \leftarrow \text{canc}) \quad (\text{rad/day})$$

as representing the dose to the red marrow from the source in red marrow. Equating the above to $51.15\, f_i E_i M_{red} \Phi_i(\text{red} \leftarrow \text{red})$, one obtains

$$\Phi(\text{red} \leftarrow \text{red}) = \frac{[1 - 1.075\, R_i\, (\text{red} \leftarrow \text{canc})]}{M_{red}}. \tag{8}$$

Similarly,

$$\Phi(E_{canc} \leftarrow \text{red}) = \frac{1 - 1.075\, R_i\, (E_{canc} \leftarrow \text{canc})}{M_{red}} \tag{9}$$

for the specific absorbed fraction of energy emitted in red bone marrow and with the indicated target. It follows that

$$\Phi(E_{bone} \leftarrow \text{red}) = \frac{1 - 1.075\, R_i (E_{canc} \leftarrow \text{canc})}{2\, M_{red}} \tag{10}$$

According to our basic assumptions, the energy originating in cancellous bone is essentially all absorbed either in red marrow or in cancellous bone. Thus

$$\Phi(\text{red} \leftarrow \text{canc})\, M_{red} + \Phi(\text{canc} \leftarrow \text{canc})\, M_{canc} = 1. \tag{11}$$

Substituting from (5), we obtain

$$\Phi(\text{canc} \leftarrow \text{canc}) = \frac{[1 - 1.075\, R_i\, (\text{red} \leftarrow \text{canc})\, M_{red}/M_{canc}]}{M_{canc}}. \tag{12}$$

Likewise, by our assumption, the energy absorbed in cancellous bone either originated in the red marrow or in cancellous bone. Thus the dose rate to cancellous bone from M_{red} μCi in the red marrow and M_{canc} μCi in the cancellous bone equals the dose rate to cancellous bone from the combined source, or

$$51.15\, f_i \bar{E}_i = 51.15\, f_i \bar{E}_i\, \Phi(\text{canc} \leftarrow \text{canc})\, M_{canc} + 51.15\, f_i \bar{E}_i\, \Phi(\text{canc} \leftarrow \text{red})\, M_{red}$$

or

$$\Phi(\text{canc} \leftarrow \text{red}) = 1.075\, R_i\,(\text{red} \leftarrow \text{canc})/M_{\text{canc}}\ , \tag{13}$$

as follows from (11). Since we will assume

$$\Phi(\text{canc} \leftarrow \text{cort}) = \Phi(\text{cort} \leftarrow \text{red}) = \Phi(\text{cort} \leftarrow \text{canc}) = 0, \tag{14}$$

we have

$$\Phi(\text{bone} \leftarrow \text{canc}) = \frac{M_{\text{canc}}\,\Phi(\text{canc} \leftarrow \text{canc})}{M_{\text{canc}} + M_{\text{cort}}}$$

$$= \left[1 - \frac{1.075\, R_i\,(\text{red} \leftarrow \text{canc})\, M_{\text{red}}}{M_{\text{canc}}}\right] \Big/ (M_{\text{canc}} + M_{\text{cort}}) \tag{15}$$

and

$$\Phi(\text{bone} \leftarrow \text{red}) = \frac{1.075\, R_i\,(\text{red} \leftarrow \text{canc})}{M_{\text{canc}} + M_{\text{cort}}}\ . \tag{16}$$

Since a major portion of the yellow marrow is concentrated in large masses, we take

$$\Phi(\text{yellow} \leftarrow \text{yellow}) = \frac{1}{M_{\text{yellow}}}\ , \tag{17}$$

and, hence,

$$\Phi(\text{cort} \leftarrow \text{yellow}) = 0 = \Phi(\text{bone} \leftarrow \text{yellow}). \tag{18}$$

Clearly these are not rigorously true, since some of the yellow marrow is widely distributed in the skeleton, but this assumption seems to be the best that is readily usable. If one assumes that red marrow, yellow marrow, and bone absorb energy proportional to their masses in all portions of the skeleton except the lower arms and the lower legs and that there the total energy is absorbed in yellow marrow and in bone (see Table A-2 of Appendix I), one finds that the absorbed fraction

$$\phi(\text{yellow} \leftarrow \text{yellow}) \cong 0.63$$

which seems reasonable since our assumption is clearly not conservative for the distributed portions of the yellow marrow. On similar grounds, we take

$$\Phi(\text{red} \leftarrow \text{yellow}) = 0 = \Phi(\text{yellow} \leftarrow \text{red}). \tag{19}$$

Again, it must be understood that these estimates are only for an average dose to the target organ; thus in (19) it is clear that a large portion of activity in the yellow marrow will not irradiate red marrow at all, and, similarly, when red marrow is the source, much of yellow marrow is entirely unirradiated. Similar remarks apply to

$$\Phi(\text{yellow} \leftarrow \text{canc}) = 0 = \Phi(\text{yellow} \leftarrow \text{cort}). \tag{20}$$

If yellow marrow is the source, then the endosteal cells on cortical bone (E_{cort}) are, for the most part, situated near the boundary of a half-space which is not contaminated, and thus

$$\Phi(E_{cort} \leftarrow \text{yellow}) = \frac{1}{2 M_{yellow}} . \tag{21}$$

This, again, is a considerable oversimplification but seems the best assumption to make unless one has a model involving detailed distributions of these two tissues. Since

$$\Phi(E_{canc} \leftarrow \text{yellow}) = 0$$

is taken as an acceptable approximation, we have

$$\Phi(E_{bone} \leftarrow \text{yellow}) = \frac{\Phi(E_{cort} \leftarrow \text{yellow})}{2} = \frac{1}{4 M_{yellow}} . \tag{22}$$

Finally, we assume complete absorption of electrons and beta rays in cortical bone, and thus

$$\Phi(\text{cort} \leftarrow \text{cort}) = \frac{1}{M_{cort}} \tag{23}$$

and

$$\Phi(\text{bone} \leftarrow \text{cort}) = \frac{M_{cort}\,\Phi(\text{cort} \leftarrow \text{cort})}{M_{cort} + M_{canc}} = \frac{1}{M_{cort} + M_{canc}} . \tag{24}$$

This completes the dosimetric values of the specific absorbed fraction for electrons and beta rays for the source and target tissues of the skeleton.

ALPHA PARTICLES AND RECOIL NUCLEI

For alpha particles and recoil nuclei, the energy is assumed to be absorbed in the source tissue except for organs with walls where, again, the energy contribution is estimated for a surface dose. That is, for most organs

$$S(X \leftarrow X) = 51.15 \times \Sigma\, f_i\, E_i\, Q_i N_i / M$$

and

$$S(X \leftarrow Y) = 0$$

if Y and X are separated; if the source is in the contents of a walled organ, the dose to the wall is taken as

$$S(\text{wall} \leftarrow \text{contents}) = 51.15 \times \Sigma\, f_i\, E_i\, Q_i N_i / 2\, M_{contents}. \tag{25}$$

This amounts to using

$$\Phi(X \leftarrow Y) = Q_i N_i / M_X \quad \text{or} \quad 0 \tag{26}$$

according as Y is identical with X or not except for the walled organs where

$$\Phi(\text{wall} \leftarrow \text{contents}) = Q_i N_i / 2M_{contents}; \tag{27}$$

the value of Q is taken as 10 for alpha particles and 20 for recoil nuclei, and this applies for all target organs. Some additional modifying factors, N, are used in special cases, as indicated below.

The gastrointestinal tract is covered by a layer of mucus which generally has a thickness exceeding the range of alpha particles. Biological experiments (Sullivan and Thompson, 1957) have demonstrated the ineffectiveness of alpha emitters when fed to rats, and the ICRP has therefore assigned a modifying factor

of N = 0.01 for the GI tract. Actually, the experiments showed no effect, but the assumption of 1% merely represents conservatism due to the possible varieties of chemical forms and conditions of exposure that might be operating. It is also some recognition of possible pathological conditions which might influence the result. This modifying factor of N = 0.01 is used only for the walls of the GI tract. Being of even shorter range than alphas, recoil nuclei are assumed not to penetrate the mucus and irradiate the mitosing cells, and thus the dose from these nuclei is considered to be zero.

Many attempts were made to compare various bone-seekers, e.g., ^{90}Sr, ^{239}Pu, ^{228}Th, with ^{226}Ra because of the long human experience with radium. The early experiments which used small laboratory animals and were at high levels of exposure indicated that many of the bone-seekers appeared to be more effective per unit dose in producing malignancies than ^{226}Ra. Therefore, the value of N = 5 was selected to represent this greater carcinogenetic potency in bone. Long-term experiments using dogs have since been undertaken, and they continue at the University of Utah, the University of California at Davis, and at other AEC laboratories. The value of N = 5 is still used by ICRP and NCRP for all alpha emitters depositing in bone except for isotopes of radium. The factor N = 5 is used, for example, when ^{228}Ra appears as a daughter of ^{228}Th, but N = 1 is used when ^{228}Ra is the parent. It is supposed that the increased potency is associated with the distribution of the radionuclide, and thus ^{228}Ra as a daughter element would not be expected to have the same distribution as does ^{228}Ra as parent. Also, there is a growing tendency to use the factor of N = 5 with radium isotopes of short half-time, because they presumably would decay near the bone surfaces where initial deposition takes place and thus give a higher dose to endosteal cells. Clearly, this is an area where practice is changing, and so in this tabulation we have used the factor N = 5 for all alpha emitters depositing in bone. The tabulations reported here may be used when the nuclide is a daughter or when it is the parent; thus the person using these data will have to decide whether he wishes to use the factor N = 5 in each

particular case and make the appropriate adjustment of the data. Accordingly, we have aimed at simplicity in the tables--namely, N = 5 is used for the energy of all alpha particles or of recoil ions absorbed in bone. A footnote to the table will serve to remind the user of the convention adopted here for radium isotopes. Here, again, only a dose to the total mineral bone is given; that is, bone has a weight of 5,000 g.

ADDITIVITY OF S

The function S possesses a number of properties of additivity, but these are all, in a sense, merely expressions of the conservation of energy. Using the notation of MIRD Pamphlet No. 1 and assuming that

$$\left\{X_i\right\}_{i=1}^{n} \qquad \text{and} \qquad \left\{Y_j\right\}_{j=1}^{m}$$

are any sets of discrete organs, or regions, of the body, V and W represent, respectively, the regions comprised of the totality of the two collectives, and activity is distributed uniformly in the regions V and W,

$$\phi(V \leftarrow W) = \sum_i \phi(X_i \leftarrow W) = \sum_j \phi(V \leftarrow Y_j) \frac{M_{Y_j}}{M_W} = \sum_i \sum_j \phi(X_i \leftarrow Y_j) \frac{M_{Y_j}}{M_W} . \tag{28}$$

This merely represents the statement that if energy is emitted uniformly in region W in the form of radiation of a particular kind and energy (photons, electrons, etc.), then in each subregion of W the fraction of total energy emitted in Y_j is M_{Y_j}/M_W and energy is additive among the regions. Expressing each ϕ in terms of the specific absorbed fraction (equals fraction of energy absorbed per gram = $\phi(V \leftarrow W)/M_V$), one has

$$\Phi(V \leftarrow W) = \sum_i \Phi(X_i \leftarrow W) \frac{M_{X_i}}{M_V} = \sum_j \Phi(V \leftarrow Y_j) \frac{M_{Y_j}}{M_W}$$

$$= \sum_i \sum_j \Phi(X_i \leftarrow Y_j) \times \frac{M_{X_i} M_{Y_j}}{M_V M_W} . \tag{29}$$

Expressing this in terms of S, one has

$$S(V \leftarrow W) = \sum_i S(X_i \leftarrow W) \frac{M_{X_i}}{M_V} = \sum_j S(V \leftarrow Y_j) \frac{M_{Y_j}}{M_W} \tag{30}$$

$$= \sum_i \sum_j S(X_i \leftarrow Y_j) \frac{M_{X_i} M_{Y_j}}{M_V M_W} .$$

Occasionally it is useful to consider the sets of organs

$$\{X_i\}_{i=1}^{n} \qquad \text{and} \qquad \{Y_j\}_{j=1}^{m}$$

together with their complementary sets TB-V and TB-W. Consider first the single source organ X and a single target organ Y. Then

$$M_Y S(Y \leftarrow X) + (M_{TB} - M_Y) S(TB - Y \leftarrow X) = M_{TB} S(TB \leftarrow X) \tag{31}$$

and

$$M_X S(Y \leftarrow X) + (M_{TB} - M_X) S(Y \leftarrow TB - X) = M_{TB} S(Y \leftarrow TB). \tag{32}$$

Combining these, one obtains

$$S(TB - Y \leftarrow TB - X)(M_{TB} - M_X)(M_{TB} - M_Y) = M_{TB}^2 S(TB \leftarrow TB) +$$

$$- M_{TB} M_X S(TB \leftarrow X) - M_{TB} M_Y S(Y \leftarrow TB) + M_X M_Y S(Y \leftarrow X). \tag{33}$$

The relation can always be expressed in terms of S for the primary organs or sets. However, situations may arise where one may wish to keep the complements, i.e., TB − V or TB − W, of the two sets in the relation. Thus,

$$S(TB \leftarrow TB) = S(TB - V \leftarrow TB) \frac{M_{TB} - M_V}{M_{TB}} + \sum_i S(X_i \leftarrow TB) \frac{M_{X_i}}{M_{TB}}$$

$$= S(TB - V \leftarrow TB - W) \frac{(M_{TB} - M_V)(M_{TB} - M_W)}{M_{TB}^2} +$$

$$+ S(TB-V\leftarrow W)\,\frac{(M_{TB}-M_V)\,M_W}{M_{TB}^2} + \sum_i S(X_i\leftarrow TB-W)\,\frac{M_{X_i}\,(M_{TB}-M_W)}{M_{TB}^2}$$

$$+ \sum_i S(X_i\leftarrow W)\,\frac{M_{X_i}\,M_W}{M_{TB}^2}\,. \tag{34}$$

Rearranging (34) and expanding W, one obtains

$$S(TB-V\leftarrow TB-W) = S(TB\leftarrow TB)\,\frac{M_{TB}^2}{(M_{TB}-M_V)\,(M_{TB}-M_W)} +$$

$$-\sum_j S(TB-V\leftarrow Y_j)\,\frac{M_{Y_j}}{(M_{TB}-M_W)} - \sum_i S(X_i\leftarrow TB-W)\,\frac{M_{X_i}}{M_{TB}-M_V}$$

$$-\sum_i\sum_j S(X_i\leftarrow Y_j)\,\frac{M_{X_i}\,M_{Y_j}}{(M_{TB}-M_V)\,(M_{TB}-M_W)}\,. \tag{35}$$

Finally, expanding on TB − V and TB − W, one obtains

$$S(TB-V\leftarrow TB-W) = S(TB\leftarrow TB)\,\frac{M_{TB}^2}{(M_{TB}-M_V)\,(M_{TB}-M_W)} +$$

$$-\sum_i \frac{M_{TB}\,M_{X_i}}{(M_{TB}-M_V)\,(M_{TB}-M_W)}\,S(X_i\leftarrow TB) +$$

$$-\sum_j S(TB\leftarrow Y_j)\,\frac{M_{TB}\,M_{Y_j}}{(M_{TB}-M_V)\,(M_{TB}-M_W)} + \sum_i\sum_j S(X_i\leftarrow Y_j)\,\frac{M_{X_i}\,M_{Y_j}}{(M_{TB}-M_V)\,(M_{TB}-M_W)} \tag{36}$$

and all of the S values occurring in the right member are tabulated. Similarly, for any organs X and Y, one has

$$S(TB-V\leftarrow Y) = S(TB\leftarrow Y)\,\frac{M_{TB}}{M_{TB}-M_V} - \sum_i S(X_i\leftarrow Y)\,\frac{M_{X_i}}{M_{TB}-M_V} \tag{37}$$

and

$$S(X \leftarrow TB - W) = S(X \leftarrow TB) \frac{M_{TB}}{M_{TB} - M_W} + \sum_j S(X \leftarrow Y_j) \frac{M_{Y_j}}{M_{TB} - M_W} . \tag{38}$$

In deriving the above relations, we have assumed that S is defined for a complete organ system which includes the total body and that the values of S are well defined. The organs of the phantom do exhaust the body, since one of them is an "organ" termed "other tissues"; however, a value of S is not given by the Monte Carlo technique for all these organs. In particular, the values of S for small target organs will usually be statistically unreliable and not all organs have been used as a source organ in a computer calculation. Thus the estimates of the various values of S given in the table are not all of equal validity. In particular, estimates obtained by use of the buildup factor have been used, and these might be expected to be high in most cases. Some estimates have been obtained by use of reciprocity or by extrapolation, and the relation of these estimates is not always clear. Thus the user should not be surprised if occasionally the use of the approximations given in the tables may lead to absurd values--perhaps a negative value on occasion. In such cases, it would not be the relation which is incorrect but the degree of approximation that one should question.

ARRANGEMENT OF TABLES

In Table 2 the values are listed according to the atomic number Z of the element and then by the mass number of the isotope. The date of preparation of the table and the date when the decay scheme was reviewed are indicated for each radionuclide. Each volume of the series will contain a complete index of all radionuclides for which an S table has been issued, including the number of the volume in which the latest revision appears.

Source organs are listed across the top of each table, and currently two pages are required to list them. The target organs are listed along the left side of the table. Values of S are listed separately for photons (G = gamma rays),

electrons (symbol B; includes beta rays and positrons), alpha particles with Q = 10 (symbol A) and recoil ions with Q = 20 (symbol R), and the total dose equivalent (symbol T). For alpha emitters in bone an additional factor N = 5 is used with the energy of the alpha particle and of the recoil nuclei. All of these values are in scientific notation (6.23 E-9 indicates 6.23×10^{-9}) and in units of rem to the target organ per microcurie-day in the source organ.

As discussed in Appendix III, the S values for photons listed under "muscle" either as a source organ or as a target organ are approximations obtained by several methods and may be inaccurate by as much as 20%. They are based on the values for the "other-tissue" compartment. This is because muscle has not been accurately included as an organ in the phantom, and the same is true for separable fat. For electrons, alpha particles, and recoil nuclei, the S values given are for muscle and are more accurate than the values for photons. If values for separable fat as a source organ are wanted and if separable fat is not the target, the values for muscle as source can be used for the photons. If S values for separable fat as a target organ are desired, they can be obtained by using the same values for photons as for muscle as target organ (error < 30%) and multiplying the electron, alpha particle, and recoil nuclei entries by 28/12.5 = 2.2 which represents the ratio of the masses of muscle and separable fat.

There is an S table for each radionuclide produced as a daughter; in addition, it is convenient to have some tables which include several radionuclides provided their radioactive half-time is short. In principle, the time should be short enough that the decay of the daughter would occur in a high percentage of cases in the same organ in which the parent nuclide decayed, and this is the basis for such composite tables as are given. Generally, there is meager biological data on the movement of such daughter radionuclides, but it is noted that the lung model involves biological half-times of the order of 15 minutes. This suggests an upper limit for the radioactive decay half-time, and, accordingly, the value of 5 minutes has been selected. Thus, whenever a parent radionuclide has a succession of daughters with radioactive decay half-times each less than 5 minutes, a table is included which provides the sum of

the S values for this parent and these daughters. In forming this table, it is assumed that each daughter radionuclide, as well as the parent, is present in the source organ for 1 μCi-day. Thus, these tables are useful only when it is judged that the microcurie-days accumulated by each radionuclide are equal. For example, ^{137}Cs decays to ^{137}Ba which has a radioactive half-life of ~ 2.5 minutes, and, accordingly, a composite table representing 1 μCi-day for each radionuclide of the chain will be given. Of course, the tables for ^{137}Cs and for ^{137}Ba also will be given so the user is not bound by this assumption.

LIMITATIONS

It should be noted that the values of S given here are computed on the basis of the 70-kg phantom and thus are appropriate only for an adult. The values of $(AF)_i$ for the source and target organs considered were computed only for sources distributed uniformly in the source organs and give only an average dose to the target organ. These average doses to target organs are those generally used by the ICRP and NCRP in their recommendations and thus may not be appropriate for cases where exposure may be at high levels, and one may need to consider the doses to portions of an organ. Likewise, the source is considered to be uniformly distributed in the source organ, because generally there is little information available on the actual distribution and also because of the complexity of the structure of the lung, skeleton, etc., which makes it difficult to program a realistic model. Thus it should be clearly understood by the users that the values of S given here were computed only for sources distributed uniformly and only provide an estimate of average dose to the target organ. This is particularly important in the case of the total body where it would be inappropriate to use the S value given here for a source in the total body if the activity were not approximately uniformly distributed; e.g., a measured body burden of ^{85}Sr would be expected to be largely in the skeleton or the lungs.

Of course, the descriptions of the organs used in the computer code are only approximations to a reference man, and the comparison is indicated in Table 1. However, there are a few cases where the approximation and the computation

procedure are especially questionable, and only these major difficulties will be mentioned here.

Dose from electrons is computed as a surface dose for the walls of the GI tract as well as for the bladder. This surface dose may be significantly larger than the dose received by the mitotic cells, but in the case of the GI tract, the thickness of the mucous layer, the concentration present in the mucus, and the depth of the mitotic cells all need to be taken into account.

If these values of S with total body as target organ are used to compute a dose to the total body, an average dose equivalent (rem) supposedly received by living tissue will be produced. In particular, for an alpha emitter passing through the GI tract, only 1% of the total energy emitted is included, and the energy supposedly absorbed in the contents is excluded. Energy absorbed in bladder contents is also excluded. The dose to each organ includes the proper values of Q for that organ, and thus this dose equivalent can be viewed as an average of the dose equivalents to the various organs of the body as estimated in this report.

REFERENCES

Berger, Martin J. (February 1968) "Energy Deposition in Water by Photons from Point Isotropic Sources," J. Nucl. Med. Suppl. No. 1: 15.

Dillman, L. T. (March 1969 and March 1970) "Radionuclide Decay Schemes and Nuclear Parameters for Use in Radiation-Dose Estimation," J. Nucl. Med. Suppl. No. 2: 10, 5 and Suppl. No. 4: 11, 5.

Dillman, L. T., and F. C. Von der Lage (1974) "Radionuclide Decay Schemes and Nuclear Parameters for Use in Radiation-Dose Estimation," J. Nucl. Med. Suppl. (in press).

International Commission on Radiological Protection (1959) Report of Committee II on Permissible Dose for Internal Radiation (1959) (Pergamon Press, London).

International Commission on Radiological Protection (1968) A Review of the Radiosensitivity of the Tissues in Bone (Pergamon Press, Oxford).

International Commission on Radiological Protection (1973) Alkaline Earth Metabolism in Adult Man (Pergamon Press, Oxford).

International Commission on Radiological Protection (In press) Report on a Reference Man (Pergamon Press, Oxford).

Lederer, C. M., et al. (1967) Table of Isotopes (John Wiley and Sons, Inc., New York) 6th edition.

Loevinger, Robert, and Mones Berman (1968) "A Schema for Absorbed-Dose Calculations for Biologically Distributed Radionuclides," J. Nucl. Med. Suppl. No. 1: 7.

National Committee on Radiation Protection (1959) Maximum Permissible Body Burdens and Maximum Permissible Concentrations of Radionuclides in Air and in Water for Occupational Exposure (National Bureau of Standards, Washington).

Snyder, W. S., et al. (Aug. 1969) "Estimates of Absorbed Fractions for Monoenergetic Photon Sources Uniformly Distributed in Various Organs of a Heterogeneous Phantom," J. Nucl. Med. Suppl. No. 3: 10, 5.

Spiers, F. W. (1968) Radioisotopes in the Human Body—Physical and Biological Aspects (Academic Press, New York).

Spiers, F. W. (1973) Personal communication to W. S. Snyder

Sullivan, M. F., and R. C. Thompson (1957) "Absence of Lethal Effects following Massive Oral Administration of Plutonium," Nature 180, 651.

APPENDIX I

DESCRIPTION OF THE MATHEMATICAL PHANTOM

The total-body phantom used in the Monte Carlo calculation of dose due to photons consists of three principal sections: (1) an elliptical cylinder representing the arms, torso and hips; (2) two truncated elliptical cones representing the two legs and feet and attached to this is a small region with a plane front surface to contain an approximation to the testicles; and (3) an elliptical cylinder representing the neck region and the lower portion of the head which is topped by half an ellipsoid. The exterior of the phantom is shown in Fig. A-1. It will be noted that the arms are not separated from the torso, and minor appendages such as fingers, feet, ears, chin, and nose are omitted. The dimensions of the phantom were chosen after consideration of the distribution of dimensions and weights of certain western populations (Altman and Dittmer, 1962; Krogman, 1941), of the phantoms designed by Hayes and Brucer (1960), and of the reference man (ICRP, in press).

Composition of the Phantom

The phantom consists of three types of tissue--a lung tissue, skeletal tissue and other soft tissue. The composition of each type and the density are specified in Table A-1. The skeletal system represents the total content of the intact skeleton and thus includes both bone and bone marrow. This material is considered to be homogeneously distributed in the skeleton. This is clearly a compromise due to our present inability to represent more accurately the bone and marrow spaces. The tissue composition shown in Table A-1 can only be regarded as an average, and clearly it is not representative of the different portions of the skeleton but only of the total.

The three tissue types used, i.e., lungs, skeleton and other tissues, are composed principally of hydrogen, carbon, nitrogen and oxygen. In the skeleton, additional elements amount to about 18% of the total mass, with calcium and phosphorus accounting for most of this. In the lungs, the composition is somewhat different from that of other soft tissues in the remainder of the phantom. This

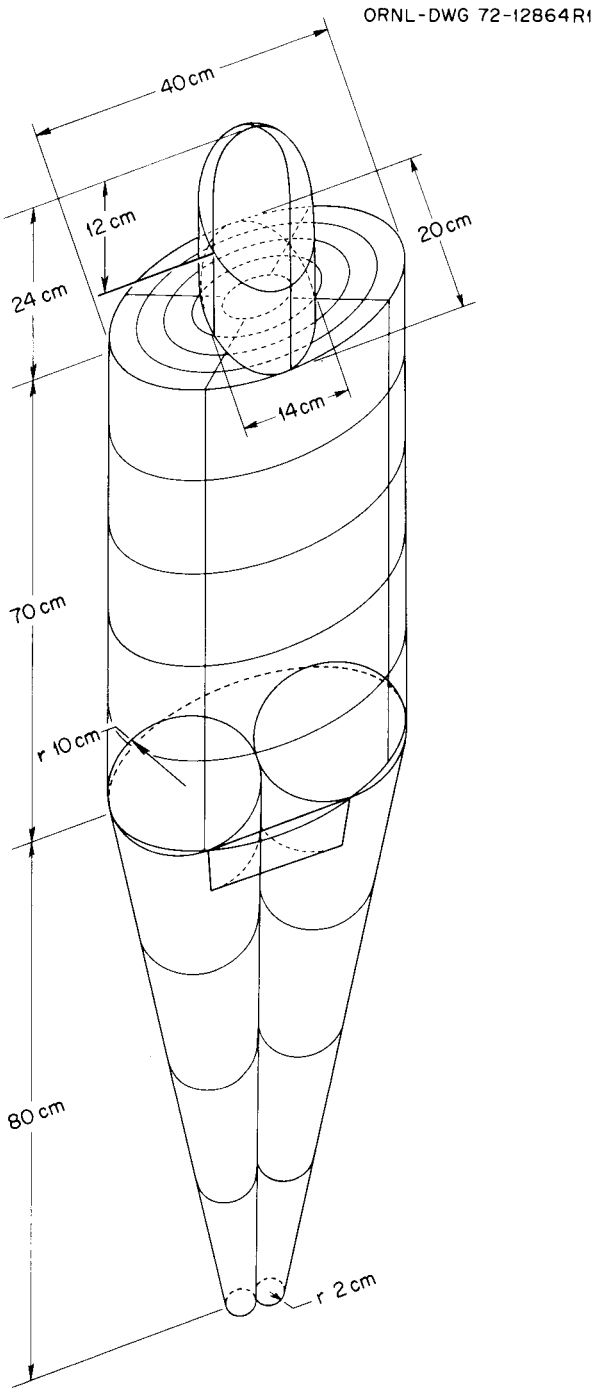

Fig. A-1. The adult human phantom.

Table A-1. Elemental Composition of Different Tissues of the Phantom (% by weight)

Element	Skeletal Tissue[a]	Lung Tissue[b]	Total Body Minus Skeleton and Lungs[c]
H	7.04	10.21	10.47
C	22.79	10.01	23.02
N	3.87	2.80	2.34
O	48.56	75.96	63.21
Na	0.32	0.19	0.13
Mg	0.11	7.4×10^{-3}	0.015
P	6.94	0.081	0.24
S	0.17	0.23	0.22
Cl	0.14	0.27	0.14
K	0.15	0.20	0.21
Ca	9.91	7.0×10^{-3}	0
Fe	8.0×10^{-3}	0.037	6.3×10^{-3}
Zn	4.8×10^{-3}	1.1×10^{-3}	3.2×10^{-3}
Rb	0	3.7×10^{-4}	5.7×10^{-4}
Sr	3.2×10^{-3}	5.9×10^{-6}	3.4×10^{-5}
Zr	0	0	8.0×10^{-4}
Pb	1.1×10^{-3}	4.1×10^{-5}	1.6×10^{-5}

[a]Density 1.4862 g/cm^3 [b]Density 0.2958 g/cm^3

[c]Density 0.9869 g/cm^3

seems to be because the lungs contain almost no fat and a larger fraction of blood than most organs. The densities of the skeletal region (bone plus marrow), lungs and the remainder of the phantom are approximately 1.4862, 0.2958 and 0.9869 g/cm^3, respectively. The values for the composition were obtained from Tipton et al. (1966) who have analyzed tissue specimens obtained from autopsies of 150 grossly normal U.S. adults. They analyzed these specimens for a wide variety of trace elements and selected values for the major chemical elements from the literature to be consistent with physiological data on content of fat, water and other constituents of these organs.

Description of the Phantom and Organs

Most of the estimates of absorbed fractions of photon energy (AF) or, equivalently, specific absorbed fractions of photon energy (Φ) used in producing the values of S given in the tables are produced by Monte-Carlo-type calculations based on a mathematical anthropomorphic phantom. The exterior of the phantom has approximately the form of the human body, although there has been no attempt to introduce small variations which would be presumed to have only a small effect on the scattering of photons. Similarly, the description of the interior organs, while generally approximately correct as to size, shape, position, composition and density, are simplified to provide formulas which are readily calculated on a digital computer. The exact specifications of the phantom and the internal organs are given below. See Fig. A-2 for a view of the principal organs.

Exterior of the Phantom

The body is represented as erect with the positive z-axis directed upward toward the head. The x-axis is directed to the phantom's left (the reader's right in Fig. A-1), and the y-axis is directed toward the posterior side of the phantom. The origin is taken at the center of the base of the "trunk" section of the phantom. The axes are calibrated in centimeters.

The "trunk" is a solid elliptical cylinder specified by

$$\left(\frac{x}{20}\right)^2 + \left(\frac{y}{10}\right)^2 \leqq 1, \quad 0 \leqq z \leqq 70$$

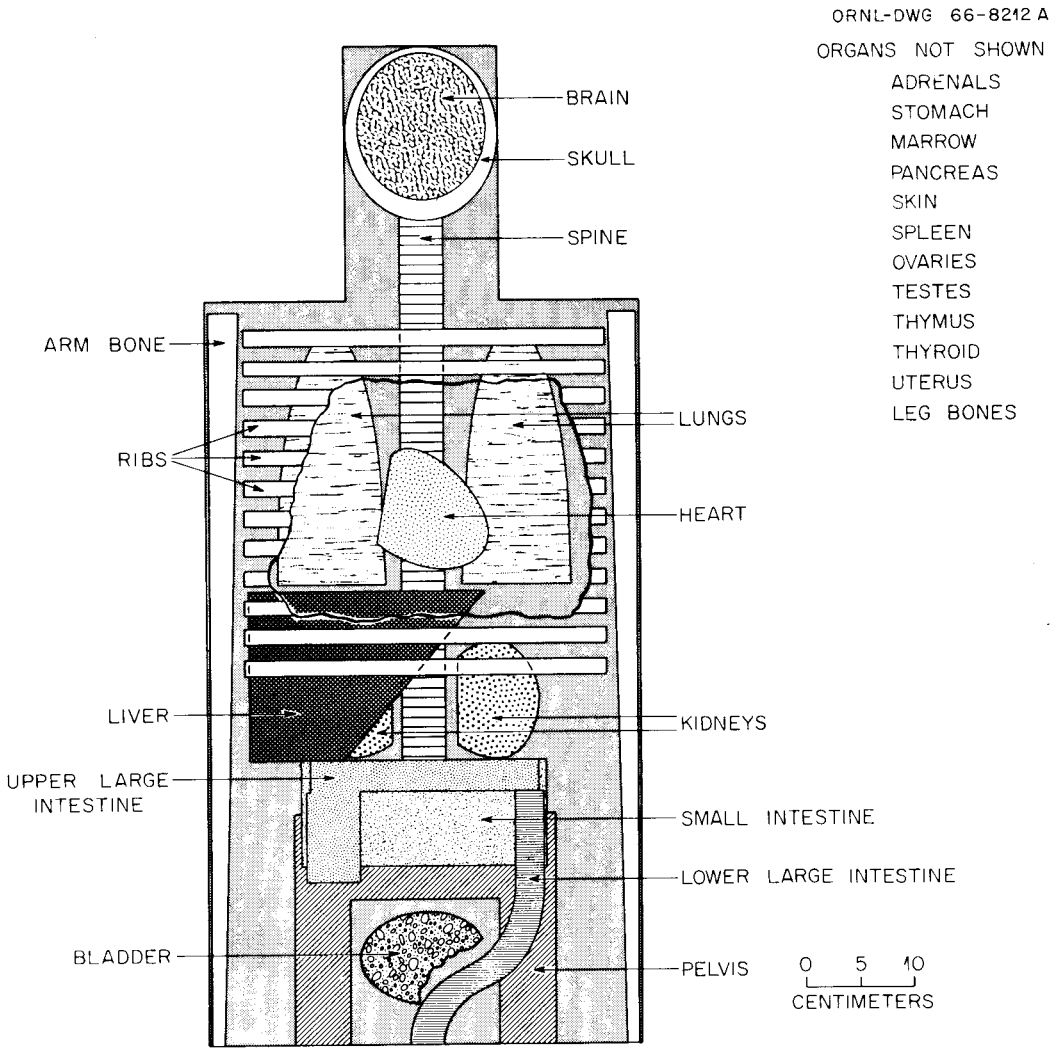

Fig. A-2. Anterior view of the principal organs in the head and trunk of the phantom used for MIRD Pamphlet No. 5.

so that the "trunk" includes the arms as well as the pelvic and hip bones from the point where the separation of the legs begins. The volume of the trunk section is 43,982 cm^3, and the mass, as indicated below, is 42,701 g.

The head section is a right elliptical cylinder topped by half an ellipsoid. The locus is specified by

$$\left(\frac{x}{7}\right)^2 + \left(\frac{y}{10}\right)^2 \leqq 1, \quad 70 \leqq z \leqq 85.5$$

or

$$\left(\frac{x}{7}\right)^2 + \left(\frac{y}{10}\right)^2 + \left(\frac{z - 85.5}{8.5}\right)^2 \leqq 1, \quad 85.5 \leqq z \leqq 94.$$

The total volume is 4,655 cm^3, and the mass, as indicated below, is 5,083 g.

The leg region of the phantom consists of the frustums of two circular cones specified by

$$x^2 + y^2 \leqq \pm x \left(20 + \frac{z}{5}\right), \quad -80 \leqq z \leqq 0,$$

where the plus sign defines the left leg and the minus sign the right. The total volume of both legs is 20,776 cm^3, and the mass, as discussed below, is 21,901 g. It is apparent that the leg region does not join smoothly to the trunk region, because the legs protrude slightly beyond the ellipse defining the trunk in the plane $z = 0$.

The genitalia region (male) of the phantom consists of the region specified by

$$-4.8 \leqq z \leqq 0 \quad -\left(10 + \frac{z}{10}\right) \leqq x \leqq 10 + \frac{z}{10}, \quad -\left(10 + \frac{z}{10}\right) \leqq y \leqq 0,$$

and

$$\left(x \pm \left(10 + \frac{z}{10}\right)\right)^2 + y^2 \geqq \left(10 + \frac{z}{10}\right)^2,$$

and this last inequality must hold for either choice of sign, i.e., the genitalia

region lies outside both legs. The genitalia region has a volume of 196.3 cm^3 and a mass of 193.7 g.

The phantom is subdivided into subregions by a geometrical grid. In the trunk this region is formed by the planes z = 0, 14, 28, 42, 56, and 70, planes $x = \pm y$, and concentric elliptic cylinders

$$\left(\frac{x}{20}\right)^2 + \left(\frac{y}{10}\right)^2 = \rho^2$$

where $\rho = 0.2$, 0.4, 0.6, and 0.8. The head is divided into eight regions defined by $x = \pm y$, $70 \leqq z \leqq 82$ and $82 \leqq z \leqq 94$. The legs are subdivided into regions by the planes z = − 20, − 40, − 60, or − 80. Although no data are given in this report for the chunks defined by this grid, the computer code provides estimates of dose and AF for each such subregion. These values are often useful in deciding whether to accept a given value or to program another calculation.

Organs

Skeletal System. The skeletal system consists of the 12 parts described below, and dose and AF are recorded separately for each part as well as for the total skeleton. A view of the total skeleton is shown in Fig. A-3.

Leg Bones. Each leg bone is the frustum of an elliptical cone. The expression for the left leg bone is

$$\left(x - 10 - \frac{8}{79.8}\,z\right)^2 + y^2 \leqq \left(3.5 + \frac{2.5}{79.8}\,z\right)^2, \quad -79.8 \leqq z \leqq 0.$$

The volume of both bones is 2,799 cm^3, and the mass is 4,160 g.

Arm Bones. Each arm bone is the frustum of an elliptical cone. The left one is defined by

$$\left[\frac{(1.4/138)\,(z - 69) + (x - 18.4)}{1.4}\right]^2 + \left(\frac{y}{2.7}\right)^2 \leqq \left[\frac{138 + (z - 69)}{138}\right]^2,$$

$0 \leqq z \leqq 69.$

ORNL-DWG 70-4810R

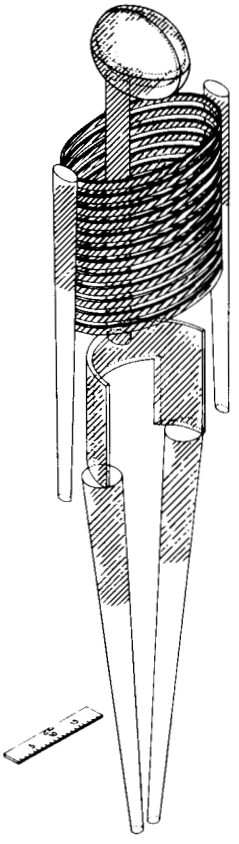

SKULL	13.1 %
VERTEBRAE	28.4 %
RIBS + STERNUM	10.2 %
SCAPULAE	4.8 %
HEAD AND NECK OF BOTH ARMS	1.9 %
BOTH CLAVICLES	1.6 %
HEAD AND NECK OF BOTH LEGS	3.8 %
PELVIS	36.2 %

TOTAL AMOUNT OF RED BONE MARROW: 1500 g

RED BONE MARROW

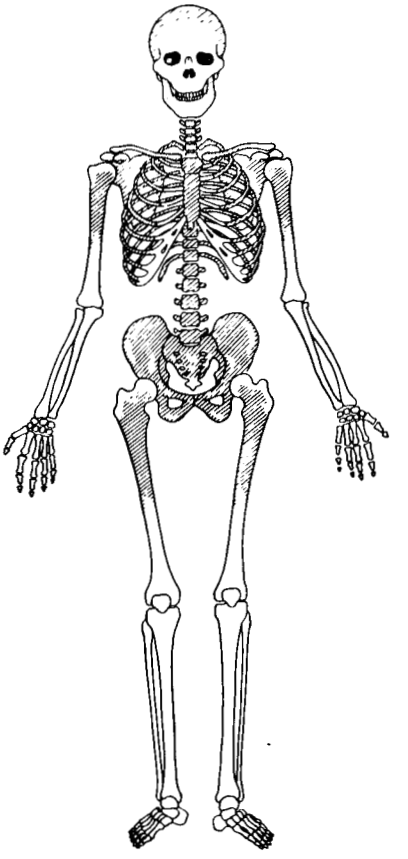

Fig. A-3. Idealized model of the skeleton for computer calculations (left) and a more realistic representation (right) with percentages of red bone marrow found in the shaded portions of the bones. Clavicles and scapulae not shown in phantom.

The volume of both arm bones is 956 cm^3 and the mass is 1,421 g.

Pelvis. The pelvis is a portion of the volume between two nonconcentric circular cylinders described by

$$x^2 + (y + 3)^2 \leqq (12)^2$$

$$x^2 + (y + 3.8)^2 \geqq (11.3)^2$$

$$y + 3 \geqq 0$$

$$0 \leqq z \leqq 22$$

$$y \leqq 5 \text{ if } z \leqq 14.$$

Its volume is 606.1 cm^3 and its mass is 900.8 g.

Spine. The spine is an elliptical cylinder given by

$$\left(\frac{x}{2}\right)^2 + \left(\frac{y - 5.5}{2.5}\right)^2 \leqq 1, \quad 22 \leqq z \leqq 78.5,$$

and has a volume of 887.5 cm^3 and a mass of 1,319 g. It is divided into three portions--an upper, middle and lower third--and dose and an AF are estimated separately for each portion. These divisions are formed by the planes $z = 70$ and $z = 35.1$.

Skull. The skull is the volume between two nonconcentric ellipsoids defined by

$$\left(\frac{x}{6}\right)^2 + \left(\frac{y}{9}\right)^2 + \left(\frac{z - 86.5}{6.5}\right)^2 \geqq 1$$

$$\left(\frac{x}{6.8}\right)^2 + \left(\frac{y}{9.8}\right)^2 + \left(\frac{z - 85.5}{8.3}\right)^2 \leqq 1$$

and has a volume of 846.6 cm^3 and a mass of 1,258 g.

Rib Cage. The rib volume is a series of bands between two concentric, right-vertical, elliptical cylinders. This region is sliced by a series of equispaced

horizontal planes into slabs, every other slice being a rib. The statements that must be satisfied are

$$\left(\frac{x}{17}\right)^2 + \left(\frac{y}{9.8}\right)^2 \leqq 1$$

$$\left(\frac{x}{16.5}\right)^2 + \left(\frac{y}{9.3}\right)^2 \geqq 1,$$

$$35.1 \leqq z \leqq 67.3;$$

$$\text{Integer}\left(\frac{z - 35.1}{1.4}\right) \text{ is even.}$$

Integer (u) is the integral part of u, i.e., integer (3.67) = 3, etc. Thus, "integer $(z - 35.1)/1.4$ is even" amounts to requiring that

$$0 \leqq \frac{z - 35.1}{1.4} < 1 \quad \text{or} \quad 2 \leqq \frac{z - 35.1}{1.4} < 3 \quad \text{or} \quad 4 \leqq \frac{z - 35.1}{1.4} < 5, \text{ etc.}$$

The total rib volume is 694 cm^3 and the mass is 1,031 g.

Clavicles. The clavicles are represented as two portions of a torus which lie along the circular arc $x^2 + (y - 11.1)^2 = 10^2$, $z = 68.25$, and has a smaller radius of 0.7883 cm. The clavicles include only the portion of the torus between the planes $11.1 - y = |x| \cot\theta$ with $\theta = 8^\circ\ 5.5'$ and $\theta = 48^\circ\ 12'$. The absolute value sign on x allows for both a right and a left clavicle. The volume of both clavicles is 54.7 cm^3, and the mass is about 82 g. The equations can be reduced to the form

$$(z - 68.25)^2 + \left(20 - \sqrt{x^2 + (y - 11.1)^2}\right)^2 \leqq 0.7883^2$$

and

$$0.89415 \leqq \frac{11.1 - y}{|x|} \leqq 7.0342, \quad y \leqq 0.$$

The clavicles lie slightly inside the cylinder defining the rib cage and just above the top rib. They are shown schematically in Fig. A-4.

ORNL-DWG 74-957

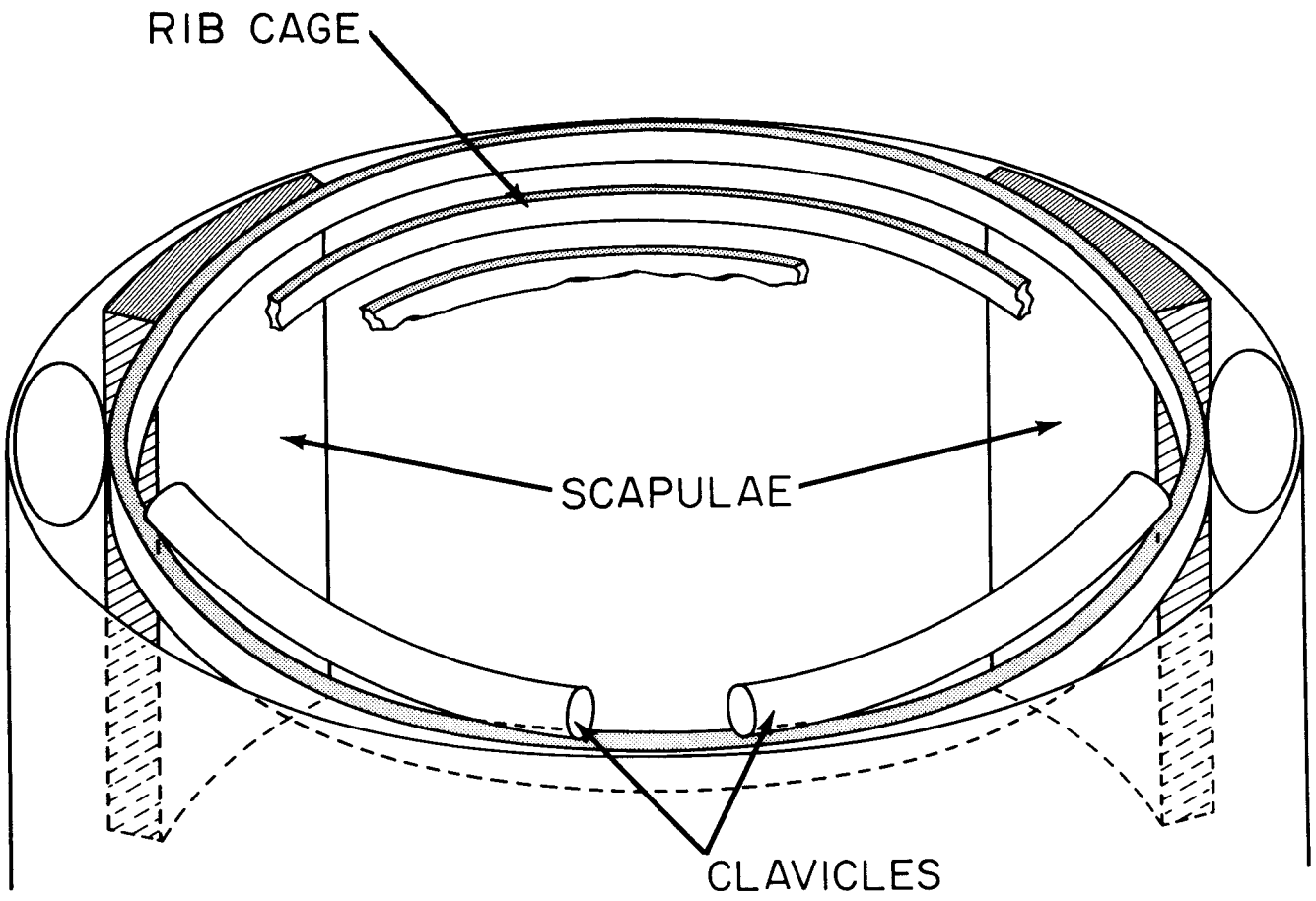

Fig. A-4. Detailed view of scapulae and clavicles.

Scapulae. The scapulae extend from $z = 64.5$ cm (the top of the 12th rib) to $z = 48.1$ cm and lie between two elliptical cylinders

$$\left(\frac{x}{17}\right)^2 + \left(\frac{y}{9.8}\right)^2 = 1 \qquad \text{(outer surface of ribs)}$$

and

$$\left(\frac{x}{19}\right)^2 + \left(\frac{y}{9.8}\right)^2 = 1 \qquad \text{(a somewhat larger cylinder).}$$

Although the lower portion of the scapula is somewhat smaller than the upper, this distinction is ignored here, and the left scapula will occupy all the above space between the planes $y = 0.25x$ and $y = 0.80x$.

Thus the test for point (x, y, z) to be in the left scapula is the following:

$50.9 \leqq z \leqq 67.3,$

$$\left(\frac{x}{19}\right)^2 + \left(\frac{y}{9.8}\right)^2 \leqq 1, \qquad \left(\frac{x}{17}\right)^2 + \left(\frac{y}{9.8}\right)^2 > 1$$

$y > 0, \quad 0.25 < y/x < 0.80.$

For the right scapula, only the last inequality needs to be replaced by

$0.25 < y/-x < 0.80.$

For both scapulae, one uses

$0.25 < y/|x| < 0.80,$

the other four inequalities being unaltered.

Consider the ellipse

$$\left(\frac{x}{a}\right)^2 + \left(\frac{y}{b}\right)^2 = 1.$$

The point (ρ,θ) lies on this ellipse if

$$\frac{\rho^2 \cos^2\theta}{a^2} + \frac{\rho^2 \sin^2\theta}{b^2} = 1,$$

or, equivalently, if

$$\rho = \frac{ab}{\sqrt{a^2 \sin^2\theta + b^2 \cos^2\theta}} .$$

The area of a sector of the ellipse is given by

$$A(\theta_1,\theta_2) = \int_{\theta_1}^{\theta_2} \frac{\rho^2}{2}\, d\theta = \int_{\theta_1}^{\theta_2} \frac{a^2 b^2 d\theta}{2(a^2 \sin^2\theta + b^2 \cos^2\theta}$$

$$= \frac{ab}{2}\left[\arctan \frac{a \tan\theta_2}{b} - \arctan \frac{a \tan\theta_1}{b}\right].$$

The volume of a "wedge" of height h with the base as indicated above is then

$$V = \frac{abh}{2}\left[\arctan \frac{a \tan\theta_2}{b} - \arctan \frac{a \tan\theta_1}{b}\right].$$

The volume of one scapula is then

$$V(\text{scapula}) = V_2 - V_1$$

where V_2 is obtained from the above formula by substituting $a = 19$, $b = 9.8$, $h = 16.4$, $\tan\theta_2 = 0.8$ and $\tan\theta_1 = 0.25$, and for V_1 one uses the same values except that $a = 17$. One finds

$$V(\text{scapula}) = V_2 - V_1 = 834.47 - 733.76 = 100.7 \text{ cm}^3.$$

For density of 1.4862 g/cm^3, one has a mass of 150.0 g for one scapula. The scapulae, as so defined, do not intersect the arm bones or the ribs or other designated organs of the phantom. The scapulae are included in Fig. A-4.

In Fig. A-3 a human adult skeleton has been sketched, and the areas which contain active bone marrow (red bone marrow) are cross-hatched. The idealized skeleton used for the phantom is sketched also with the corresponding areas cross-hatched. The red, or active, bone marrow is taken to total 1,500 g, and the same

weight is assigned to yellow bone marrow. The weights of the two marrow types are given in Table A-2, and they are assigned to the corresponding regions of bone and are assumed to be uniformly distributed in these regions. In calculating an absorbed fraction for red and for yellow marrow in these regions, it is assumed that the marrow absorbs energy per gram as efficiently as does bone. This assumption is not grossly wrong at energies of 200 keV or more, but it is increasingly inaccurate at energies below 100 keV. The effect is to somewhat overestimate the dose to marrow and to somewhat underestimate the dose to bone. This difficulty is due to the failure to find ways to program the intricate intermixture of bone and marrow spaces in a more realistic fashion. The composition of the skeleton, as given in Table A-1, has a density of 1.4862 g/cm^3 and thus is to be regarded as a homogeneous mixture of true bone and marrow and other organic constituents of the skeleton.

Adrenals. Each adrenal is half an ellipsoid atop a kidney. The left adrenal is given by

$$\left(\frac{x-4.5}{1.5}\right)^2 + \left(\frac{y-6.5}{0.5}\right)^2 + \left(\frac{z-38}{5}\right)^2 \leqq 1, \quad z \geqq 38;$$

the volume of both adrenals is 15.71 cm^3 (Fig. A-5), and the mass is 15.5 g.

Urinary bladder and contents. The bladder is regarded as an ellipsoid, and the defining inequalities are

$$\left(\frac{x}{4.958}\right)^2 + \left(\frac{y+4.5}{3.458}\right)^2 + \left(\frac{z-8}{3.458}\right)^2 \leqq 1$$

$$\left(\frac{x}{4.706}\right)^2 + \left(\frac{y+4.5}{3.206}\right)^2 + \left(\frac{z-8}{3.206}\right)^2 \geqq 1.$$

The volume is 45.73 cm^3, and the mass is 45.13 g. The contents have a volume of 202.6 cm^3 and mass of 200 g. This represents a moderately full bladder.

Dose to the bladder wall from a photon emitter present in the urine will vary greatly, depending on the degree of filling even for the same concentration or amount of activity present. The specific absorbed fraction, Φ(bladder$\leftarrow$content),

Table A-2. Masses of Red and Yellow Marrow and Bone in the Phantom

Bone Region	Red Marrow (g)	Bone (g)	Yellow Marrow (g)
Arms			
Upper*	28.5	474	9.5
Lower	0	520	389
Clavicles	24	49.2	8
Legs			
Upper**	57	2 036	19
Lower	0	1 588	461
Pelvis	543	177	181
Ribs	153	677	201
Scapulae	72	206	24
Skull			
Cranium***	178.5	557	59.5
Mandible	18	439	6
Spine			
Upper†	51	130	17
Middle	211.5	533	70.5
Lower‡	163.5	87.8	54.5
Total	1 500	7 474	1 500

*$69 \geqq z \geq 52.6$ **$0 \geqq z \geq -22.8$ ***$z \geq -3y + 77$

†$70 \leq z \leq 78.5$ ‡$0 \leq z \leq 35.1$

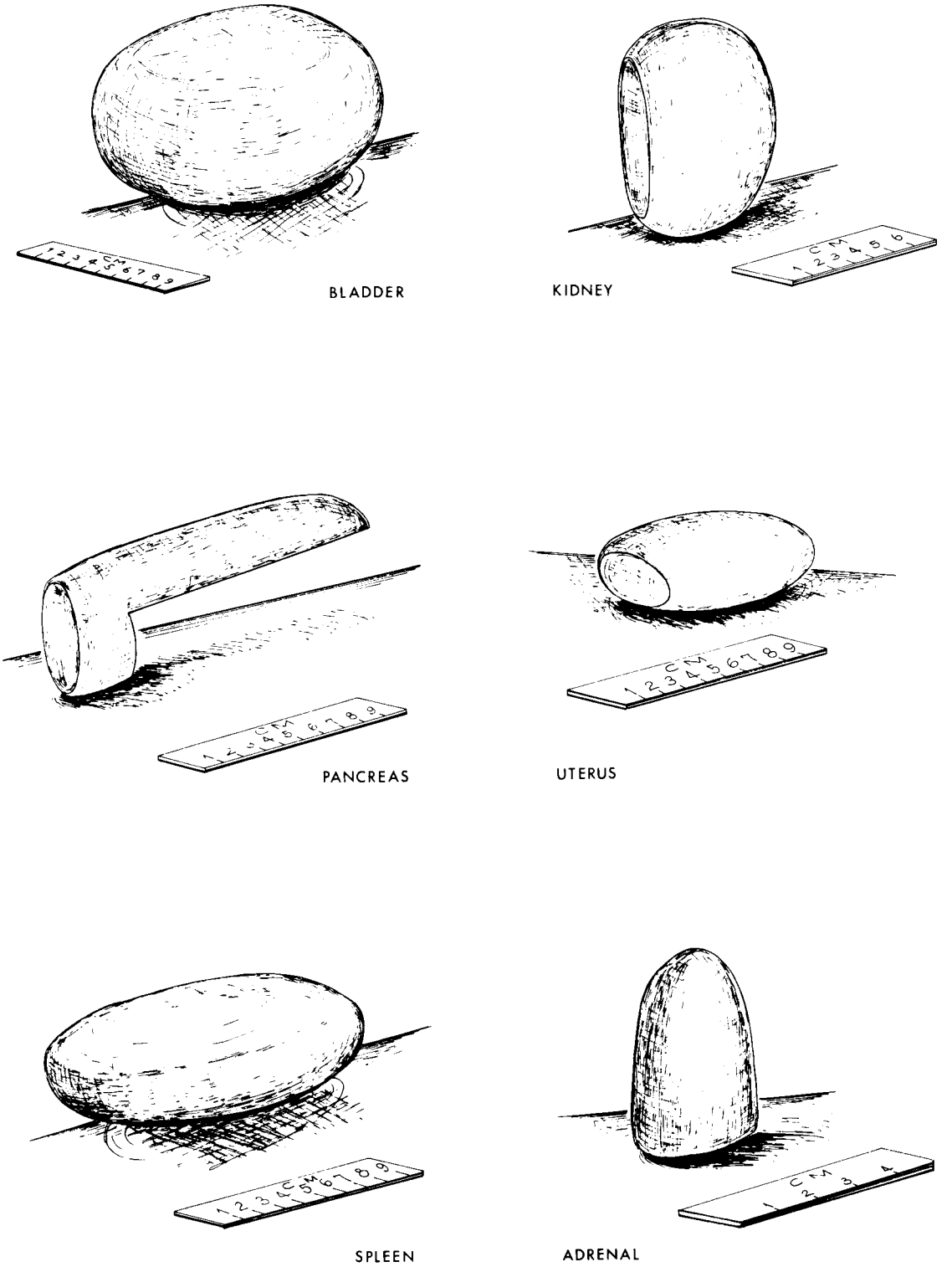

Fig. A-5. Mathematical models for bladder, kidneys, pancreas, uterus, spleen and adrenals.

will vary by approximately an order of magnitude (Snyder, Ford and Warner, 1970). Thus the user of these data should be aware that the values tabulated here are only appropriate for one size of bladder. The difference in Φ, or dose rate, to bladder walls of different sizes from other source organs outside the bladder is generally small. The bladder is shown in Fig. A-5.

Brain. The brain is an ellipsoid given by

$$\left(\frac{x}{6}\right)^2 + \left(\frac{y}{9}\right)^2 + \left(\frac{z - 86.5}{6.5}\right)^2 \leqq 1,$$

and the volume is 1,470 cm^3 and the mass is 1,451 g (Fig. A-7).

Gastrointestinal tract and contents — Stomach (S). The stomach is represented as the mass between two ellipsoids,

$$\left(\frac{x - 8}{4}\right)^2 + \left(\frac{y + 4}{3}\right)^2 + \left(\frac{z - 35}{8}\right)^2 \leqq 1$$

and

$$\left(\frac{x - 8}{3.387}\right)^2 + \left(\frac{y + 4}{2.387}\right)^2 + \left(\frac{z - 35}{7.387}\right)^2 \geqq 1.$$

The volume is 151.9 cm^3, and the mass 150 g; the contents have a volume of 250.2 cm^3 and a mass of 246.9 g. The thickness of the stomach wall is about 0.613 cm.

The stomach represented here is a "full" stomach, and the average dose rate, even for the same activity present, probably varies greatly depending on the degree of extension of the stomach, presence of air spaces, etc.

— Small Intestine (SI). The small intestine does not seem to remain in any "standard position" except the ends which are relatively fixed. Thus the small intestine is to be regarded as occupying a volume within which it is free to move. No attempt to determine a specific configuration is made here, and thus the wall and contents are not distinguished for estimation of photon dose. The

small intestinal wall has a mass of 640 g, and the contents have a mass of 400 g. Thus the total mass is 1,040 g, and the corresponding volume is about 1,054 cm^3. This volume, which lies in the pelvic region, is a section of a circular cylinder given by

$$x^2 + (y + 3.8)^2 \leqq (11.3)^2$$

$$-4.86 \leqq y \leqq 2.2$$

$$17 \leqq z \leqq 27,$$

but the portion of the large intestine within this region is excluded. The thickness of the wall is generally 0.3-0.4 cm, although the thickness of the duodenum is approximately 1/10 these values.

– Upper Large Intestine (ULI). The upper large intestine consists of an ascending colon and a transverse colon. The ascending colon is defined by the inequalities

$$(x + 8.5)^2 + (y + 2.36)^2 \leqq 2.5^2$$

$$(x + 8.5)^2 + (y + 2.36)^2 \geqq 1.7915^2$$

$$14.45 \leqq z \leqq 24.$$

The wall has a total volume of 91.22 cm^3 and a mass of 90.02 g. The inequalities

$$(x + 8.5)^2 + (y + 2.36)^2 \leqq 1.7915^2$$

$$14.45 \leqq z \leqq 24$$

define the contents of the ascending colon. The volume is 96.29, and the mass is 95.03 g. The thickness of the wall according to this model is 0.7085 cm.

The transverse colon is an elliptical cross-section and is defined by

$$\left(\frac{y + 2.36}{2.5}\right)^2 + \left(\frac{z - 25.5}{1.5}\right)^2 \leqq 1$$

$$\left(\frac{y + 2.36}{1.973}\right)^2 + \left(\frac{z - 25.5}{0.973}\right)^2 \geqq 1$$

$$-10.5 \leqq x \leqq 10.5.$$

The volume of the wall is 120.7 cm^3, and the mass is 119.2 g. By this model the thickness is about 0.53 cm. The contents are specified by

$$\left(\frac{y + 2.36}{1.973}\right)^2 + \left(\frac{z - 25.5}{0.973}\right)^2 \leqq 1$$

$$-10.5 \leqq x \leqq 10.5.$$

The volume is 126.7 cm^3, and the mass is 125 g.

– Lower Large Intestine (LLI). The lower large intestine consists of a descending colon and a sigmoid colon. The descending colon is described by the inequalities

$$\left(\frac{x - x_0}{1.88}\right)^2 + \left(\frac{y - y_0}{2.13}\right)^2 \leqq 1$$

$$\left(\frac{x - x_0}{1.58}\right)^2 + \left(\frac{y - y_0}{1.34}\right)^2 \geqq 1$$

$$8.72 \leqq z \leqq 24$$

where

$$x_0 = 9 + \frac{0.28\,(z - 24)}{15.28}$$

$$y_0 = \frac{2.5\,(8.72 - z)}{15.28}.$$

The descending colon has a volume of 90.59 cm^3 and a mass of 89.40 g. The thickness of the wall would vary between 0.3 cm and 0.79 cm according to this model.

The sigmoid colon consists of portions of two torii and is defined by the inequalities (upper portion)

$$\left(\sqrt{(x-3)^2 + (z-8.72)^2} - 5.72\right)^2 + y^2 \leqq 1.57^2$$

$$\left(\sqrt{(x-3)^2 + (z-8.72)^2} - 5.72\right)^2 + y^2 \geqq 0.91^2$$

$$x \geqq 3 \qquad \text{and} \qquad z \leqq 8.72$$

and (lower portion)

$$\left(\sqrt{(x-3)^2 + z^2} - 3\right)^2 + y^2 \leqq 1.57^2$$

$$\left(\sqrt{(x-3)^2 + z^2} - 3\right)^2 + y^2 \geqq 0.91^2$$

$$x \leqq 3 \qquad \text{and} \qquad z \geqq 0.$$

The volume of the sigmoid colon is 70.42 cm^3, and the mass is 69.50 g. The thickness of the wall would be 0.66 cm according to this model.

The entire gastrointestinal tract is sketched in Fig. A-6.

Heart. The heart is half an ellipsoid capped by a hemisphere which is cut by a plane. A rotation and translation are then effected. The heart (Fig. A-7) is represented by

$$x_1 = 0.6943\ (x + 1) - 0.3237\ (y + 3) - 0.6428\ (z - 51),$$

$$y_1 = 0.4226\ (x + 1) + 0.9063\ (y + 3),$$

$$z_1 = 0.5826\ (x + 1) - 0.2717\ (y + 3) + 0.7660\ (z - 51),$$

$$\left(\frac{x_1}{8}\right)^2 + \left(\frac{y_1}{5}\right)^2 + \left(\frac{z_1}{5}\right)^2 \leqq 1,$$

$$x_1^2 + y_1^2 + z_1^2 \leqq (5)^2 \qquad \text{if} \qquad x_1 < 0,$$

ORNL-DWG 73-12124

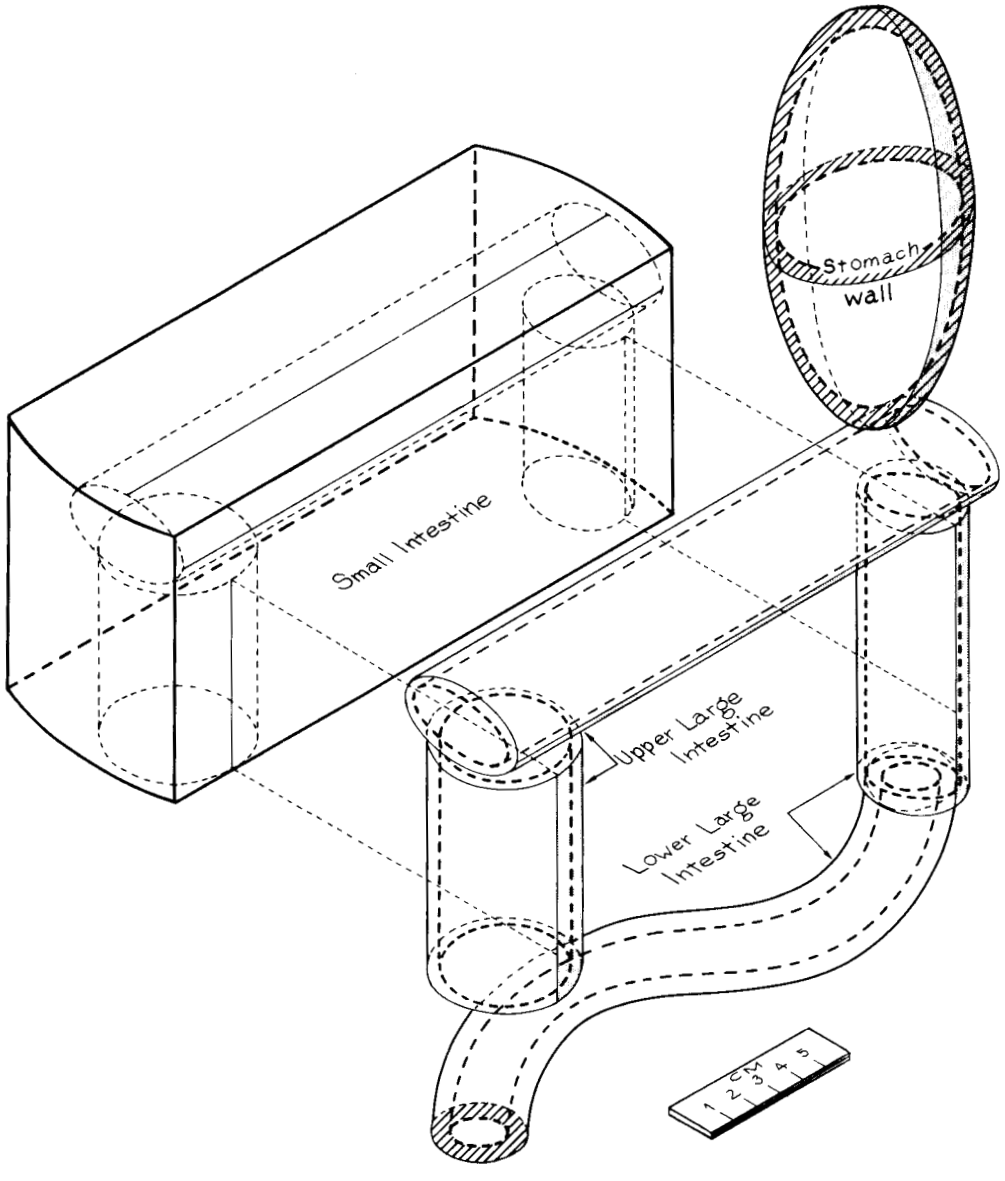

Fig. A-6. Mathematical model for the gastrointestinal tract.

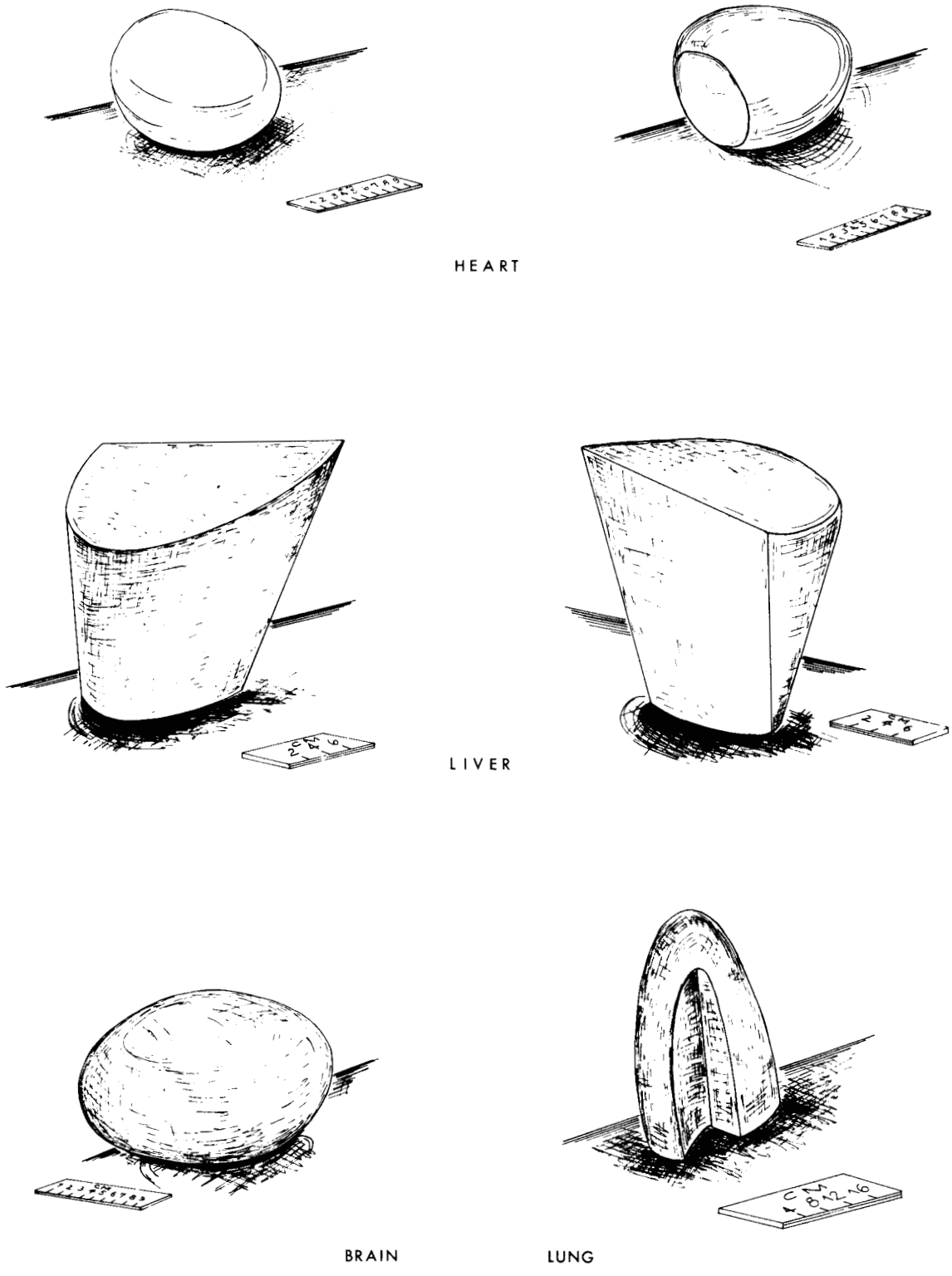

Fig. A-7. Mathematical models for the heart, liver, brain and lungs.

$$\frac{x_1}{3} + \frac{z_1}{5} \geqq -1 \qquad \text{if} \qquad x_1 < 0.$$

It has a volume of 603.1 cm^3 and a mass of 595.2 g.

Kidneys. Each kidney is an ellipsoid cut by a plane (Fig. A-5). The left kidney is given by

$$\left(\frac{x-6}{4.5}\right)^2 + \left(\frac{y-6}{1.5}\right)^2 + \left(\frac{z-32.5}{5.5}\right)^2 \leqq 1,$$

$$x \geqq 3.$$

The volume of both kidneys is 288 cm^3 and the mass is 284.2 g.

Liver. The liver is defined by an elliptical cylinder cut by a plane as follows:

$$\left(\frac{x}{16.5}\right)^2 + \left(\frac{y}{8}\right)^2 \leqq 1,$$

$$\frac{x}{35} + \frac{y}{45} - \frac{z}{43} \leqq -1,$$

$$27 \leqq z \leqq 43.$$

Its volume is 1,833 cm^3 (Fig. A-7) and its mass is 1,809 g.

Lungs. Each lung is half an ellipsoid with an anterior section removed. The defining expressions for the left lung are

$$\left(\frac{x-8.5}{5}\right)^2 + \left(\frac{y}{7.5}\right)^2 + \left(\frac{z-43.5}{24}\right)^2 \leqq 1,$$

$$z \geqq 43.5,$$

$$\left(\frac{x-2.5}{5}\right)^2 + \left(\frac{y}{7.5}\right)^2 + \left(\frac{z-43.5}{24}\right)^2 \geqq 1 \qquad \text{if} \qquad y < 0.$$

The volume of both lungs is 3,378 cm^3 (Fig. A-7) and the mass is 999.2 g.

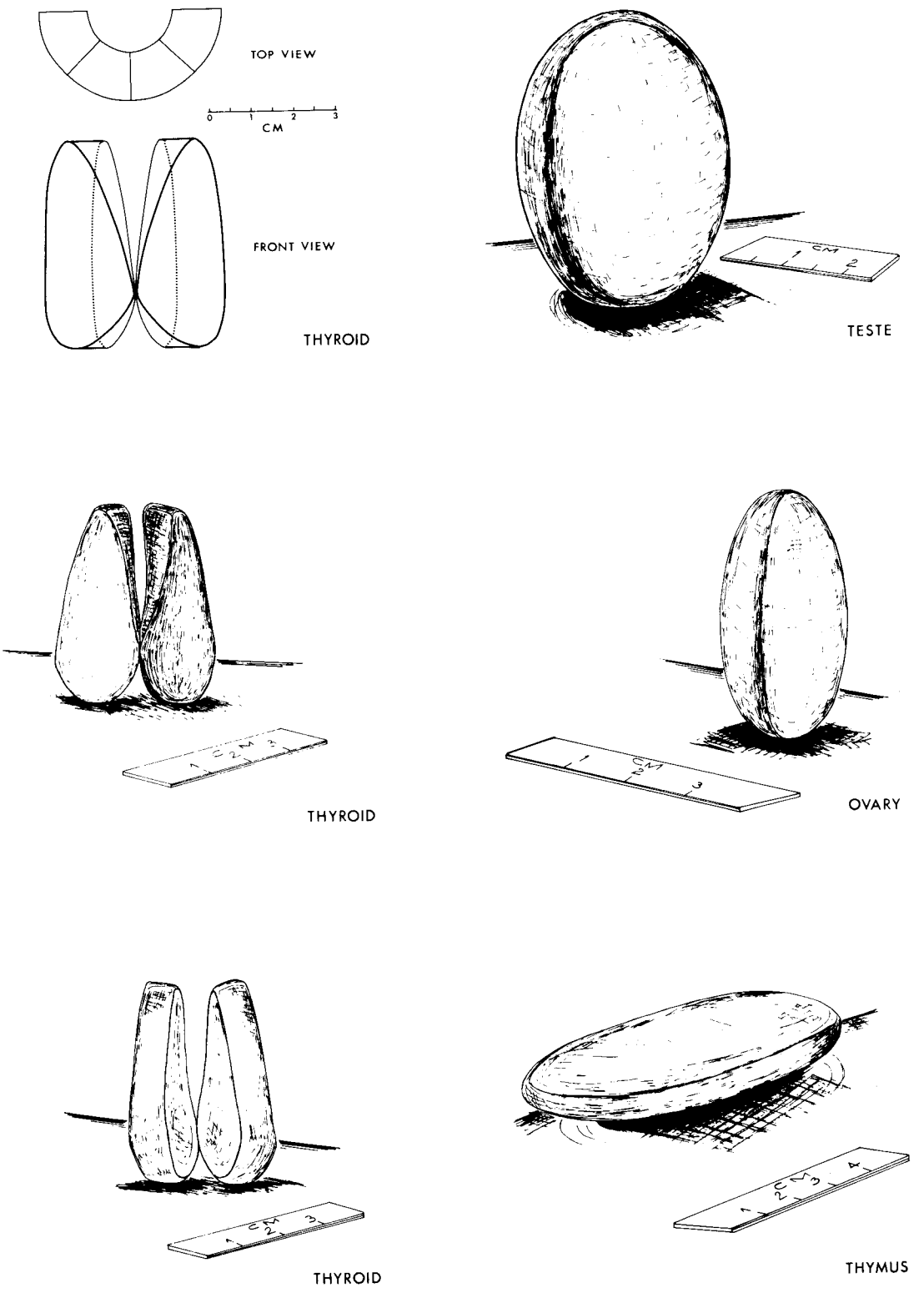

Fig. A-8. Mathematical models for the thyroid, testes, ovaries and thymus.

Ovaries. Each ovary is an ellipsoid (Fig. A-8). The left ovary is given by

$$(x - 6)^2 + \left(\frac{y}{0.5}\right)^2 + \left(\frac{z - 15}{2}\right)^2 \leqq 1.$$

The volume of both ovaries is 8.378 cm^3 and the mass is 8.268 g.

Pancreas. The pancreas is half an ellipsoid with a section removed (Fig. A-5). It is defined by

$$\left(\frac{x}{15}\right)^2 + y^2 + \left(\frac{z - 37}{3}\right)^2 \leqq 1,$$

$$x \geqq 0,$$

$$z \geqq 37 \qquad \text{if} \qquad x > 3.$$

It has a volume of 61.07 cm^3 and a mass of 60.27 g.

Skin. Skin is represented as a layer of 0.2 cm thickness extending over the entire exterior of the phantom. Thus this corresponds to the dermis as well as the epidermis. The back is the only major body area where the thickness is larger, being about double. The volume of skin is 2,828 cm^3 and the mass is 2,791 g.

Spleen. The spleen is defined by the ellipsoid

$$\left(\frac{x - 11}{3.5}\right)^2 + \left(\frac{y - 3}{2}\right)^2 + \left(\frac{z - 37}{6}\right)^2 \leqq 1$$

and has a volume of 175.9 cm^3 and a mass of 173.6 g (Fig. A-5).

Testicles. The testicles are ellipsoids (Fig. A-8) which are represented by the inequalities

$$\left(\frac{x \pm 1.3}{1.3}\right)^2 + \left(\frac{y + 8}{1.5}\right)^2 + \left(\frac{z + 2.3}{2.3}\right)^2 \leqq 1$$

where the plus sign is used for the right testicle and the minus sign for the left. The volume of both testicles is 37.57 cm^3 and the mass of both is 37.08 g.

Thymus. The thymus is formed by the ellipsoid

$$\left(\frac{x+2}{3}\right)^2 + \left(\frac{y+6}{0.5}\right)^2 + \left(\frac{z-60.5}{4}\right)^2 \leqq 1,$$

and it has a volume of 25.13 cm^3 (Fig. A-8) and a mass of 24.80 g.

Thyroid. The lobes of the thyroid lie between two concentric cylinders and are formed by a cutting surface (Figs. A-8 and A-9). The expressions for this organ are

$$x^2 + (y+6)^2 \leqq (2.2)^2,$$

$$x^2 + (y+6)^2 \geqq (1)^2,$$

$$y + 6 \leqq 0,$$

$$70 \leqq z \leqq 75,$$

$$[(y+6) - |x|]^2 \geq 2\left[x^2 + (y+6)^2\right]\tau^2,$$

in which

$$\tau = \frac{2(\sqrt{2}-2)}{5}(z-70) + 1 \qquad \text{for } 0 \leqq z - 70 \leqq \frac{5}{4}$$

and

$$\tau = \frac{2(2-\sqrt{2})}{15}(z-70) + \frac{2\sqrt{2}-1}{3} \qquad \text{for } \frac{5}{4} < z - 70 \leqq 5.$$

The volume is 19.89 cm^3 and the mass is 19.63 g.

Uterus. The uterus is an ellipsoid cut by a plane and is given by

$$\left(\frac{x}{2.5}\right)^2 + \left(\frac{y+2}{5}\right)^2 + \left(\frac{z-14}{1.5}\right)^2 \leqq 1,$$

$$y \geqq -4.5.$$

It has a volume of 66.27 cm^3 (Fig. A-5) and a mass of 65.40 g.

ORNL-DWG 74-958

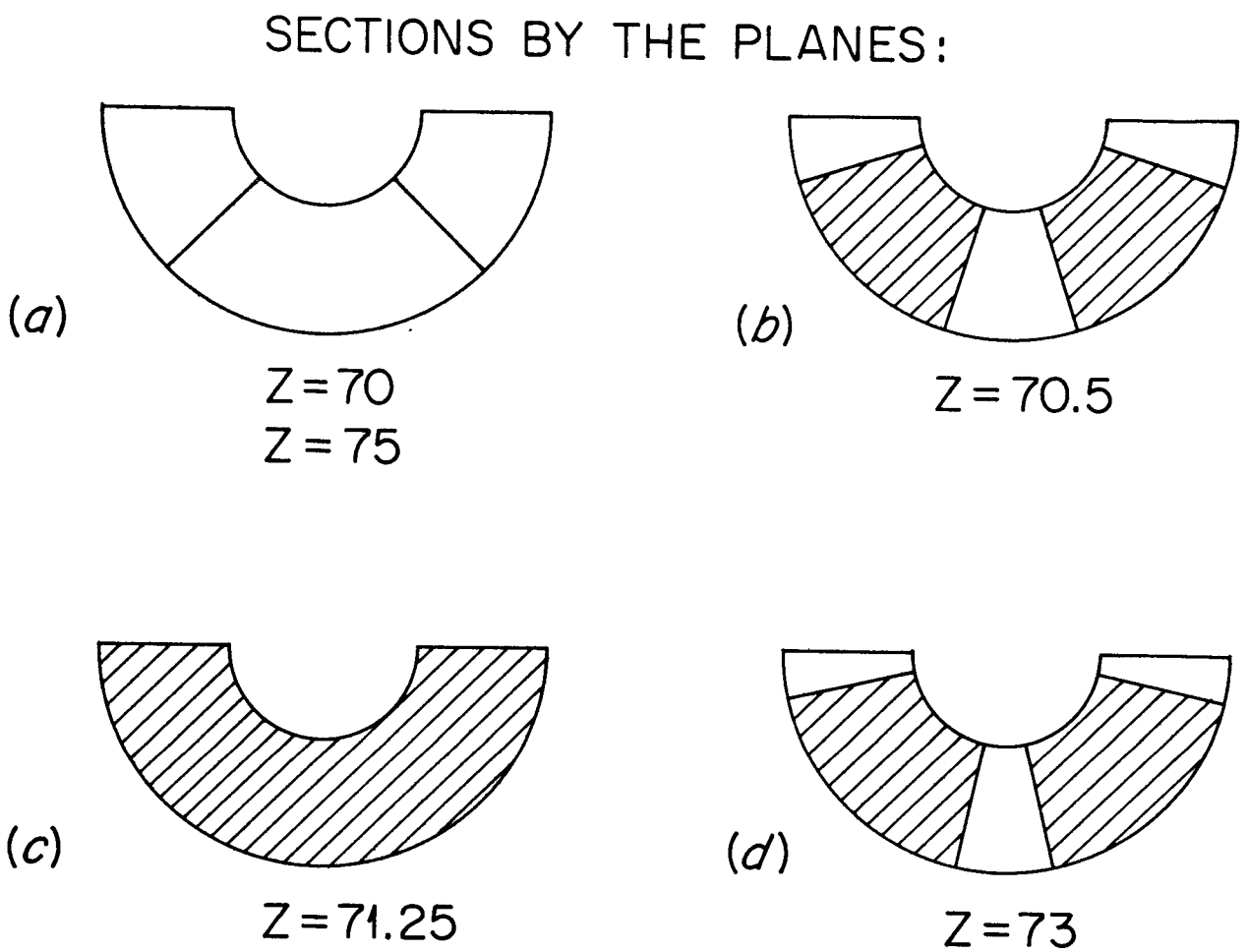

Fig. A-9. Sections of the mathematical thyroid at various heights.

References

Altman, P. L., and D. S. Dittmer (1962), "Growth including Reproduction and Morphological Development," Biological Handbook (Fed. Am. Soc. Exptl. Biol., Washington).

Hayes, R. L., and M. Brucer (1960), "Compartmentalized Phantoms for the Standard Man, Adolescent and Child," Intern. J. Appl. Radiation Isotopes 9, 113.

International Commission on Radiological Protection (in press), Report on a Reference Man (Pergamon Press, Oxford).

Krogman, W. M. (1941), "Growth of Man," Tabulae Biologicae (The Haag, Holland), vol. 20, p. 712, edited by H. Denzer et al.

Snyder, W. S., Mary R. Ford and G. G. Warner (1970), "Estimation of Dose and Dose Commitment to Bladder Wall from a Radionuclide Present in Urine," Health Phys. Div. Annual Progress Report for Period Ending July 31, 1970, ORNL-4584, pp. 206-8.

Tipton, I. H., W. S. Snyder and M. J. Cook (1966), "Elemental Composition of Standard Man," Health Phys. Div. Annual Progress Report for Period Ending July 31, 1966, ORNL-4007, p. 241.

APPENDIX II
THE MONTE CARLO TECHNIQUE

Photon histories are determined using the mass-attenuation coefficients $\mu_{pe}(E)$, $\mu_c(E)$ and $\mu_{pp}(E)$ for the photoelectric, Compton and pair-production interactions, respectively. Because these were calculated from atomic attenuation coefficients tabulated in NBS Circular 583 (Grodstein, 1957; McGinnis, 1959) and compositions listed in Table A-1, they have different values for regions with differing compositions. The procedure for using these coefficients was not the straightforward one of obtaining an interaction site and then tracing back along the path to find the first surface where the photon entered a medium whose attenuation coefficient differed from that of the region where it began the flight. This method would have entailed a considerable increase in computer time. Instead, for the first step of the procedure, an attenuation coefficient μ_0 was used that was greater than or equal to that of any of the regions, i.e., skeletal, lung and the remainder of the phantom. The potential site of an interaction was chosen by the usual procedure of taking the distance traversed as

$$\text{distance} = (-\ln r)/\mu_0$$

in which r is a number distributed randomly between 0 and 1. The point on the line at this distance from the starting point in the direction of the photon's path was then tested to determine the region of the phantom containing it. Denoting this region by i, one then plays a game of chance with probability μ_i/μ_0 of acceptance where μ_i is the total mass-attenuation coefficient for the region. If the outcome of the game is favorable, the interaction site is accepted; if it is unfavorable, the photon is allowed another flight beginning at the point reached and continuing with the same direction and energy. It is not difficult to prove that this procedure gives a photon the correct expectation of reaching any point on the line regardless of how many boundaries it crosses.

In addition to scattering, the photons have a finite probability of absorption which predominates at low energies. Thus very few photons will penetrate to

large distances, and therefore the statistics of the estimate will be poor. To compensate partially for this, each photon was given a weight that initially was set at unity. With each interaction, this weight was reduced to allow for the probability of survival, and the photon was allowed to continue undergoing only Compton scattering interactions. The reduction of weight is expressed by

$$W_n = W_{n-1} \frac{\mu_c(E_{n-1})}{\mu(E_{n-1})}$$

in which W_n is the weight carried by the photon after the nth collision and $\mu_c(E_{n-1})$ and $\mu(E_{n-1})$ are the coefficients for Compton scattering and the total coefficient before the nth collision, respectively. This reduction of the weight carried by the photons is equal to the expectation of a Compton scattering which the photon would have in the actual physical processes. The total flight history of a photon is terminated (1) if it escapes from the phantom, (2) if its energy falls below 4 keV or (3) if its weight falls below 10^{-5}; in the latter two cases, the energy was considered as locally absorbed.

The energy deposition for the nth interaction, E_n^*, is

$$E_n^* = W_{n-1}\left[\frac{\mu_{pe}(E_{n-1})}{\mu(E_{n-1})} E_{n-1} + \frac{\mu_c(E_{n-1})}{\mu(E_{n-1})} (E_{n-1} - E_n) + \frac{\mu_{pp}(E_{n-1})}{\mu(E_{n-1})} (E_{n-1} - 2m_0c^2)\right]$$

in which $\mu_{pe}(E_{n-1})$, $\mu_c(E_{n-1})$ and $\mu_{pp}(E_{n-1})$ are the mass-attenuation coefficients for the photoelectric, Compton and pair-production processes before the collision at the site considered, respectively, and m_0c^2 is the rest mass energy of an electron. It will be noted that the total energy of the photon is absorbed locally when a photoelectric process occurs, and this is also the case for the kinetic energy of the electron and positron produced by pair production. The positron will be annihilated, and two photons of energy m_0c^2 ($\simeq$ 0.51 MeV) will be emitted. The computer code is designed to take account of these photons since a new photon of energy 0.51 MeV with weight

$$2W_{n-1}\mu_{pp}(E_{n-1})/\mu(E_{n-1}),$$

and a random orientation is started at the site of the pair production and followed independently afterward.

No procedure has been used to take account of the finite range of the electrons and positrons that are produced. Generally, these ranges are small compared with the diameters of most organs, and the absorbed dose will not change abruptly with distance except at a boundary where composition and density change or at the boundary of the source organ. At such a boundary the density of photon interactions may change abruptly. The change in absorbed dose would be somewhat less abrupt at such a boundary due to the finite range of the secondary particles. Thus neglect of this further dispersion of the energy distribution in this calculation accentuates the change of absorbed dose at such a boundary. However, there is no attempt here to estimate boundary effects. We estimated only an absorbed fraction for each organ considered as a whole.

Finally, bremsstrahlung might be considered as a further example of a secondary form of radiation which might have a rather extended range, and so these photons might be followed by the Monte Carlo method. This has not been done, first, because the probability of producing a photon with an energy approaching the kinetic energy of the electron is rather small--although greater than zero--and, second, because the total energy accounted for by bremsstrahlung is very small for the energies and materials considered here (NAS-NRC, 1964).

Statistics

A standard deviation of each estimate has been calculated. The following discussion will describe the procedure used for each region. Let E^*_{ni} be the energy deposited in the region under consideration on the nth interaction of the ith source photon. This energy may be zero, as it will be in the frequently occurring case when the nth interaction does not occur within the region. The total energy deposited by the ith photon, or by the ith history, to the region will be

$$E_i^* = \sum_{n=1}^{m_i} E_{ni}^*$$

in which m_i is the number of interactions occurring in the ith history before termination. The estimate of the average energy deposited per photon in the region is then

$$\overline{E} = \frac{1}{M} \sum_{i=1}^{M} E_i^* ,$$

in which M source photons were followed.

For the standard deviation, σ, of the estimate $\overline{E}$, one has

$$\sigma^2 = \frac{1}{M(M-1)} \sum_{i=1}^{M} (E_i^* - \overline{E})^2 .$$

Since the absorbed fraction and specific absorbed fraction will differ from $\overline{E}$ by constant factors, they will have a coefficient of variation, CV, which is the same as that for $\overline{E}$. Thus CV = $100\sigma/\overline{E}$ in percent, and in this formulation it is also the coefficient of variation of the absorbed fraction and the specific absorbed fraction.

When the distribution of $\overline{E}$ is known to be approximately normal, one can determine a confidence interval by using the standard deviation. However, there are several indications that $\overline{E}$ is not normally distributed in cases where the coefficient of variation is greater than 50%. This generally occurs when there are fewer than 100 interactions contributing to the estimated absorbed fraction. Under these circumstances σ cannot be used to estimate confidence intervals as is customary when the sample is normally distributed. A small number of interactions may occur in a region that has a small volume or that is many mean-free flight paths from the source. Sometimes both conditions may apply. The computer records the number of photons that have an interaction in each region, and this has been examined also to estimate subjectively the accuracy of the estimate.

Examination of results in cases where the coefficient of variation exceeds 50%, often compared with results of independent recalculation of such estimates,

leads us to believe that the estimate may often be in error by a factor of 2 to 5. Therefore, we have developed other methods to apply for such cases, and these are presented in Appendix III. Although not highly accurate, the inaccuracy would seldom or never be greater than a factor of two according to the evidence presented in Appendix III. All values obtained in this way are indicated in the basic tables of values of the specific absorbed fraction given below. Values obtained by the Monte-Carlo-type calculation are estimates based on a sample size of 60,000 photons.

References

Grodstein, G. W. (1957), X-ray Attenuation Coefficients for 10 kev to 100 Mev, National Bureau of Standards Circular 583 (Washington).

McGinnis, R. T. (1959), Supplement to NBS Circular 583 (Washington).

National Academy of Sciences—National Research Council, Studies in Penetration of Charged Particles in Matter, Publication 1133, p. 266 (Washington).

APPENDIX III

SPECIAL TECHNIQUES FOR ESTIMATING SPECIFIC ABSORBED FRACTIONS

Introduction

Specific absorbed fractions of photon energy, computed by the Monte Carlo method for a variety of organs of an anthropomorphic phantom, are given in Table A-3. The monoenergetic photon source is assumed to be uniformly distributed in each of 19 different source organs, and specific absorbed fractions (Φ) are estimated in some 22 organs whenever the coefficient of variation for a sample of 60,000 photons is less than 50%. Unfortunately, for many organs the coefficient of variation was greater than 50%, and subsequent experience tends to confirm earlier impressions that estimates with a coefficient of variation of 50% or more may easily be inaccurate by a factor of 2 or even more. A number of attempts to produce estimates to supply these missing entries have not been entirely successful (Snyder, 1970). One of these--namely, the use of the buildup factor for an unbounded medium--seems to be particularly attractive since the accuracy does not appear to depend on the size of the organ; and for the adult body, it appears to be accurate for organs of the trunk to within a factor of 2, being generally within some 20 to 30% of the values reliably estimated by the Monte Carlo calculation. The use of the reciprocity theorem and scaling on the mass of organs are discussed also with special reference to muscle and fat.

Method Using the Buildup Factor

Berger (1968) has given estimates of the buildup factor $B(\mu x)$ for a point source of photons in an infinite medium of water or of tissue. The range on x is to 20 mean-free paths, but he has later made available to the authors prepublication results which extend the distance to 40 mean-free paths. The specific absorbed fraction Φ (fraction of energy absorbed per gram) in the infinite medium at distance x cm from the point source emitting photons of a fixed energy E is given by

$$\Phi(\mu x) = \frac{\mu_{ab} e^{-\mu\rho x}}{4\pi x^2} B(\mu\rho x), \qquad \text{(A-1)}$$

where μ and μ_{ab} are the mass attenuation and mass absorption coefficients for photons of energy E.

It is easy to adapt Eq. (A-1) to the case of a source and target organ of finite size. Let S denote a source organ of arbitrary size and shape in the medium with a source density of one photon of a fixed energy E per gram. Consider a fixed point Y of the medium. The specific absorbed fraction at Y due to the extended source in S is given by:

$$\frac{1}{\rho\,|S|}\int_S (dX)\,\frac{\rho\mu_{ab}\,e^{-\mu\rho|X-Y|}}{4\pi\,|X-Y|^2}\,B(\mu\rho|X-Y|), \tag{A-2}$$

where the integration is over the source organ S, ρ is the density of the medium, dX is a volume element of S, and $|S|$ denotes the volume of S. Multiplying (A-2) by ρdY, integrating over an arbitrary "organ" T of the medium, and dividing by $\rho|T|$, one has (by additivity of the absorbed fraction) the specific absorbed fraction from S to T, which, in the notation of MIRD Pamphlet No. 1 (Loevinger and Berman, 1968) is

$$\Phi(T\leftarrow S) = \frac{1}{|S|\,|T|}\int_T dY\int_S dX\,\frac{\mu_{ab}\,e^{-\mu\rho|X-Y|}}{4\pi\,|X-Y|^2}\,B(\mu\rho|X-Y|. \tag{A-3}$$

The direct integration of formula (A-3) is rather forbidding, especially if the boundaries of S and T are complicated. For this reason we resort to evaluation of Eq. (A-3) by use of the Monte Carlo method. It is well known that if N points (X_i,Y_i) are selected randomly in the six-dimensional region $S \times T$, then (A-3) is the expectation of the expression

$$\frac{1}{N}\sum_i \frac{\mu_{ab}\,e^{-\mu\rho|X_i-Y_i|}}{4\pi|X_i-Y_i|^2}\,B(\mu\rho\,|X_i-Y_i|). \tag{A-4}$$

Actually, values of the buildup factor for distances to 40 mean-free paths are available only for water; hence, for this purpose ρ may be taken as 1 without substantial loss of accuracy.

It is clear that this method is straightforward but is subject to one difficulty, namely, if S coincides with T or shares a common boundary with T, expression (A-3) may be unbounded. To avoid this difficulty, we replace the term

$$\frac{\mu_{ab} e^{-\mu|X_i - Y_i|}}{4\pi |X_i - Y_i|^2} B(\mu|X_i - Y_i|) \tag{A-4}$$

by an approximation to its average value over a small sphere of radius r when X_i and Y_i are both within the small sphere. In practice r will be taken as 0.1 cm, although other values of r have been tried. Thus we set

$$\Phi(T \leftarrow S) = \frac{1}{N} \sum_i f(X_i, Y_i), \tag{A-5}$$

where

$$f(X_i, Y_i) = \frac{\mu_{ab} e^{-\mu|X_i - Y_i|}}{4\pi |X_i - Y_i|^2} B(\mu|X_i - Y_i|) \tag{A-6}$$

if $|X_i - Y_i| > r$, but

$$f(X_i, Y_i) = \frac{1}{4/3\, \pi r^3} \int_{|X_i - Y_i| \le r} dY_i \times \frac{\mu_{ab} e^{-\mu|X_i - Y_i|}}{4\pi |X_i - Y_i|^2} B(\mu|X_i - Y_i|)$$

if $|X_i - Y_i| \le r$. Changing to polar coordinates and setting $B(\mu|X_i - Y_i| \cong 1$, one obtains

$$f(X_i, Y_i) \cong \int_0^r \mu_{ab} e^{-\mu\tau} d\tau \Big/ \frac{4\pi r^3}{3} = \frac{3\mu_{ab}(1 - e^{-\mu r})}{4\pi r^3 \mu} \tag{A-7}$$

in this latter case. This relative stability of the formula is obtained only at the expense of a certain indefiniteness in the boundary. Sometimes the entire sphere with center at X_i and of radius r is not within the region to be sampled, so we have preferred to keep r small. Now, $1 - e^{-\mu r} < \mu r$ for all positive μr,

and thus

$$\frac{3\mu_{ab}(1 - e^{-\mu r})}{4\pi r^3 \mu} < \frac{3\mu_{ab}}{4\pi r^2},$$

and for $r = 0.1$ this is about 25 μ_{ab}. Thus, for a sample size of 30,000 pairs of points (X_i, Y_i), a single term could contribute $25\mu_{ab}/30{,}000$ or about $\mu_{ab}/1000$ to the Monte Carlo estimate of the mean in such a case.

Discussion

Data on the specific absorbed fraction are plotted in Figs. A-10 through A-16 for photons of energies 0.03, 0.05, 0.1, 0.5, 1, 1.5, and 4 MeV. The position of each point is determined by the two estimates of Φ; that is, the abscissa represents the estimate of Φ by the Monte Carlo program used for the anthropomorphic phantom (Snyder et al., 1969), and the ordinate represents the estimate of Φ by use of the buildup factor. When the point is on the heavy line, the two estimates are equal. All estimates shown in these figures are based on a sample size of 30,000 photons. It will be noted that (1) generally, the points lie above the heavy line as they should (backscatter is maximal in the infinite space of tissue or water), (2) the points lie increasingly close to the line as the coefficient of variation of the Monte Carlo anthropomorphic estimates decreases, and (3) very few points lie outside the two lines which bound the region $0.5 < \Phi_1/\Phi_2 < 2$ where Φ_1 and Φ_2 are the two corresponding estimates.

There are a few exceptions to the above. When the skeleton is the target organ, the point should be raised by the factor $\mu_{ab}^{bone}/\mu_{ab}^{tissue}$, since the composition of bone will produce a greater abundance of secondary electrons than will water or soft tissue. This correction is important mainly for the energies below 0.1 MeV. Also, when the lung is the source organ, it appears the results might be multiplied by a factor of about 3, although the evidence is not entirely clear. In the buildup factor calculation, the lung region has a mass of about 3,000 g, and this allows fewer photons to escape than if the mass were about 1,000 g. Probably the factor to be used is dependent on the energy of the photon. Similarly,

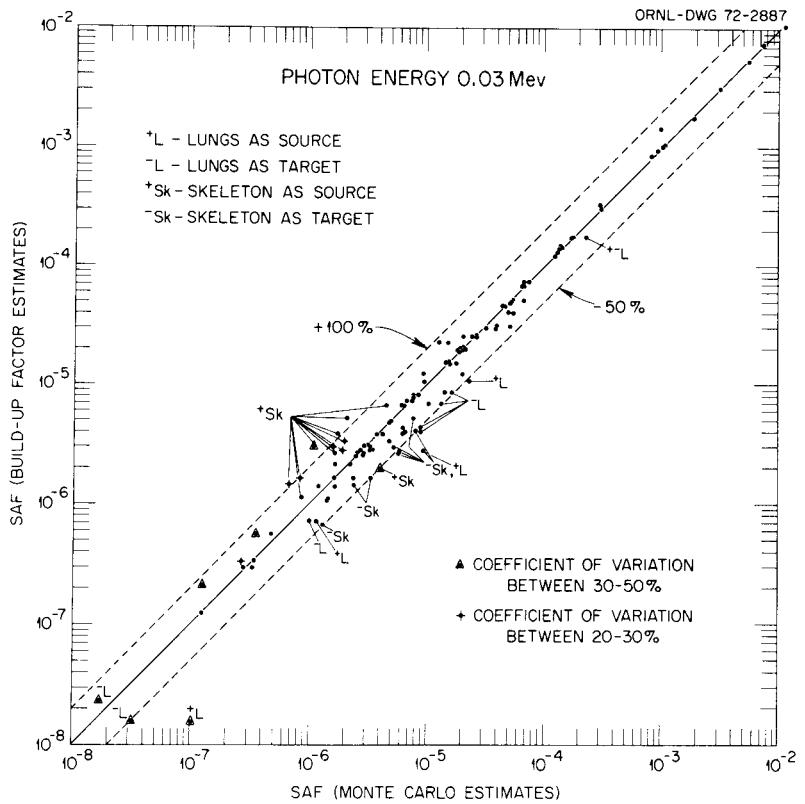

Fig. A-10. Monte Carlo estimates of specific absorbed fractions compared with buildup factor estimates (photon energy 0.03 MeV).

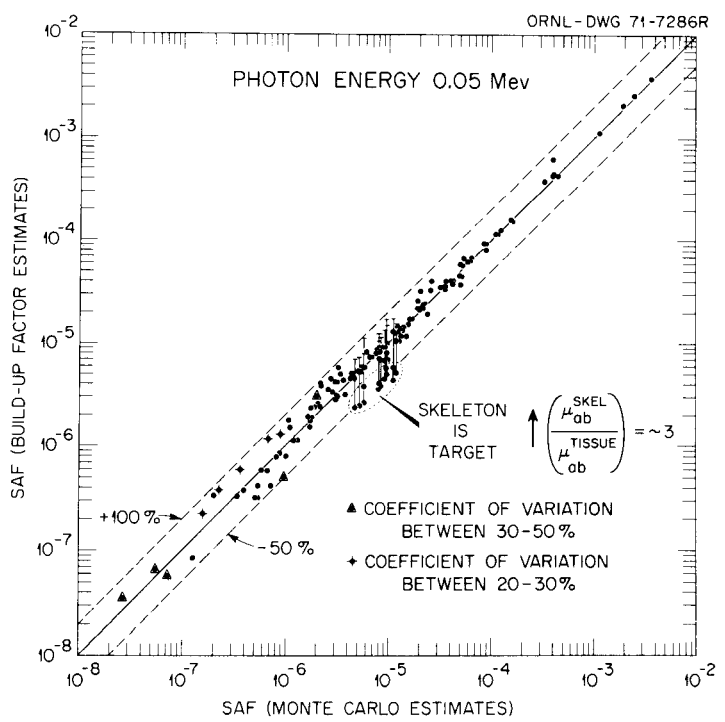

Fig. A-11. Monte Carlo estimates of specific absorbed fractions compared with buildup factor estimates (photon energy 0.05 MeV).

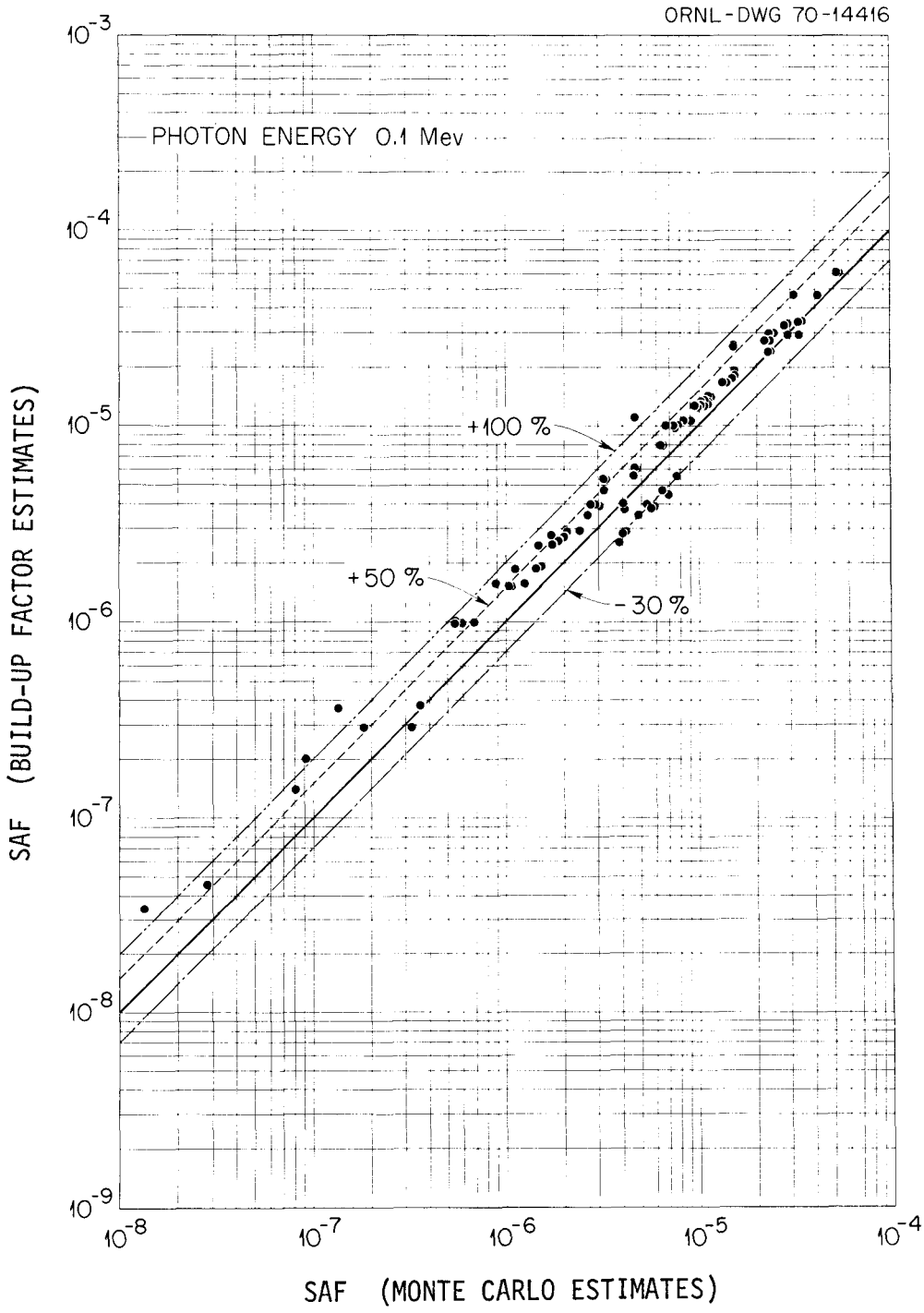

Fig. A-12. Monte Carlo estimates of specific absorbed fractions compared with buildup estimates (photon energy 0.1 Mev).

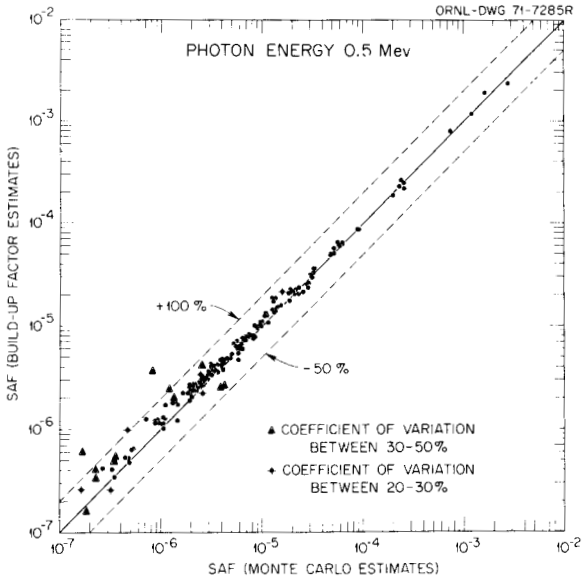

Fig. A-13. Monte Carlo estimates of specific absorbed fractions compared with buildup factor estimates (photon energy 0.5 MeV).

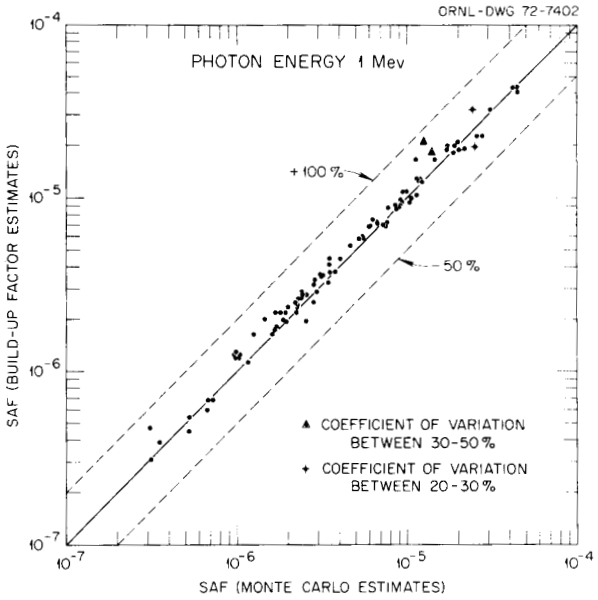

Fig. A-14. Monte Carlo estimates of specific absorbed fractions compared with buildup factor estimates (photon energy 1 MeV).

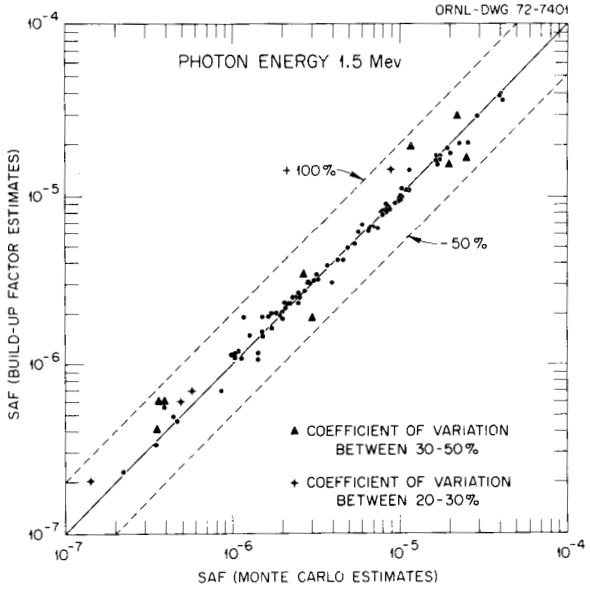

Fig. A-15. Monte Carlo estimates of specific absorbed fractions compared with buildup factor estimates (photon energy 1.5 MeV).

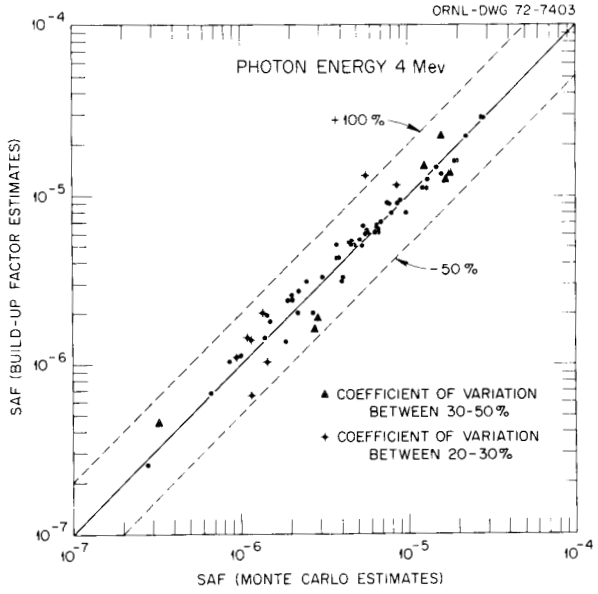

Fig. A-16. Monte Carlo estimates of specific absorbed fractions compared with buildup factor estimates (photon energy 4 MeV).

when bone is the source, the result obtained from the calculation using the buildup factor might be multiplied by two-thirds. However, these are "rule-of-thumb" corrections which are not rigorous, but they do generally improve the correspondence of the two estimates. We are continuing to explore this method but expect that the inclusion of an adjustment factor for bone and lungs is advisable, although its value is probably not always the reciprocal of the density.

The values plotted are generally for the organs for which the direct Monte Carlo calculation gives reasonably precise estimates. Undoubtedly a considerable portion of the scatter in Figs. A-10-A-16 is due to the statistics of the Monte Carlo results. However, the evidence seems clear that the estimates obtained by use of the buildup factor are nearly always within a factor of 2 and are generally within 20 to 30% of the estimates obtained by the direct Monte Carlo method. The values of Φ obtained by this method are designated by a symbol in the basic table of specific absorbed fractions given below (Table A-3). There is no plausible reason why the method should be less accurate for small organs than for large ones, and this is a most important consideration since the accuracy of the Monte Carlo estimates is generally less for the smaller organs than for those of large size.

Other Approximate Techniques for Obtaining Absorbed Fractions

The absorbed fraction for a target organ would be expected to vary directly with the mass of that organ provided the source was outside the region and not too close to its surface (Snyder, 1970). If the source and target organs are identical, the same reference provides some evidence which indicates that the absorbed fraction varies with the cube root of the mass provided the mean-free path of the photon is large compared with the diameter of the organ or, alternatively, that multiple scattering of photons is negligible. This reference (Snyder, 1970) contains considerable evidence on the validity of the reciprocity theorem for the organs of the body. The evidence indicates that generally the results obtained by use of reciprocity or by scaling on the mass will be valid within a factor of 2 and frequently are much more accurate than this.

Muscle and Fat

There are a number of instances where the phantom described in Appendix I is deficient in that certain tissues are not explicitly defined. The most important of these is perhaps muscle which has a mass of approximately 28 kg. Muscle has not been described as a specific locus in the phantom but is present in the compartment termed "other tissues." This compartment consists of all the tissue which remains after the specified organs are excluded. The total mass is 48.48 kg, and thus muscle constitutes approximately 58% of this mass. Another important tissue is the separable fat which totals about 12.5 kg or 26% of the "other tissue" compartment. Thus the mass of muscle is a major fraction of the total mass, while fat is over a fourth of it. It is suggested that the specific absorbed fraction for the "other tissues" compartment (OT) be used with reciprocity to obtain the absorbed fractions for muscle and fat. This has been done, i.e.,

$$\Phi(X \leftarrow \text{Muscle}) = \Phi(X \leftarrow \text{OT}) = \Phi(X \leftarrow \text{fat}) \qquad \text{(A-8)}$$

and

$$\Phi(\text{Muscle} \leftarrow X) = \Phi(\text{OT} \leftarrow X)$$

$$\Phi(\text{Separable fat} \leftarrow X) = \Phi(\text{OT} \leftarrow X)$$

where X is any organ outside the OT compartment. Since both muscle and separable fat are distributed rather generally throughout the OT compartment, it is believed use of these equations for photons will not produce large errors. However, it is clear they can only claim to be approximately correct at best.

If a value of ϕ is wanted for muscle to muscle or fat to fat, the problem is even more difficult. The equation

$$\phi(\text{Muscle} \leftarrow \text{Muscle}) = \sqrt[3]{0.58}\ \phi(\text{OT} \leftarrow \text{OT})$$

and

$$\phi(\text{Separable fat} \leftarrow \text{Separable fat}) = \sqrt[3]{0.26}\ \phi(\text{OT} \leftarrow \text{OT})$$

might be accepted on the basis indicated above for photons of energy of 200 keV

or more. Actually these correction factors only amount to changes of 17% and 36% in the values and are applicable only to the high-energy range. Thus it is suggested that they be neglected and that one use the value of $\Phi(OT \leftarrow OT)$ without correction for both muscle and fat. This approximation has been used and seems to be consistent with the accuracy to be expected of the method and perhaps overestimates the fraction of energy absorbed for photons of low energy.

Since the OT compartment has not been used as a source organ, the value of $\Phi(X \leftarrow OT)$ must be obtained by additivity. When X has been used as a source organ, this can be obtained by reciprocity, that is,

$$\Phi(X \leftarrow OT) = \Phi(OT \leftarrow X) \qquad \text{or} \qquad \phi(X \leftarrow OT) = \frac{M_X}{M_{OT}} \phi(OT \leftarrow X).$$

For other organs X which have not been used as source organs

$$\phi(X \leftarrow OT) = \frac{M_{TB}\,\phi(X \leftarrow TB) - \Sigma_Y M_Y \phi(X \leftarrow Y)}{M_{TB} - \Sigma_Y M_Y}$$

where the sum on Y extends over all the source organs except the total body and the same relationship holds for the specific absorbed fraction Φ. Since not every organ has been used as a source organ, there is an additional small discrepancy of the mass $M_{TB} - \Sigma_Y M_Y$ and M_{OT}, so this also involves some scaling on the mass, but this is by a small percentage of the total mass of the OT compartment.

Bone and Red and Yellow Marrow

There has been no attempt to model the intricate intermixture of bone and bone marrow. Thus the skeleton is homogeneous as a whole. However, the weights of each of the two marrow types have been programmed using the estimated weights which are given in Table A-2, Appendix I. Sources of photons have been programmed for the skeleton (i.e., bone plus marrow) and additionally for red bone marrow and yellow bone marrow. Since

$$M_{skel}\,\phi(X \leftarrow skel) = M_B\,\phi(X \leftarrow bone) + M_{RBM}\,\phi(X \leftarrow \text{red bone marrow})$$

$$+ M_{YBM}\,\phi(X \leftarrow \text{yellow bone marrow})$$

and

$$\phi(skel \leftarrow X) = \phi(bone \leftarrow X) + \phi(RBM \leftarrow X) + \phi(YBM \leftarrow X)$$

are valid for any organ X and since two of the three terms are known, the fourth term can be obtained. The bone indicated above has a mass of ~7,000 g and thus is equivalent to the skeleton with marrow removed. It is not an exact equivalent of mineral bone alone but includes some blood and organic materials as well as periarticular tissue and cartilage. The above equations are used when either red or yellow bone marrow is the source and when bone is the target. For other source organs X, $\Phi(bone \leftarrow X)$ is taken as $\Phi(skel \leftarrow X)$ for photons. The value of Φ for total endosteal cells as target is taken as the value of Φ with skeleton as target for all source organs. This compromise does have the merit of continuing the use of 7,000 g as the mass of "bone" as used here, and this mass, which has been in use for many years, is closely related to the estimate of 30 rem/yr to the "bone" from 0.1 μg of ^{226}Ra. This procedure is used only for photons.

Urinary Bladder

There is evidence to indicate that dose to the bladder wall per photon emitted in urine, or equivalently the specific absorbed fraction of photon energy, $\Phi(\text{Bladder wall} \leftarrow \text{Urine})$, may vary by approximately an order of magnitude as the bladder fills (Snyder et al., 1970). This makes it difficult to give any value for dose to the bladder wall unless one has information on the schedule of voidings, the rate of formation of urine, the metabolic elimination pattern for the isotope and other factors. In MIRD Pamphlet No. 5, values were quoted for a rather full bladder of 500 ml content, and the values were averaged over walls and contents. This was done to increase the statistical accuracy; as indicated above, no single value will be representative for all patients, but the separation

of bladder wall from the contents is a step toward a more realistic value, and the use of 200 ml for the contents is also perhaps more typical for most patients. A study of the question taking account of many of the variables listed above is under way.

Extrapolation of the Specific Absorbed Fraction

Photon energies of less than 10 keV are of frequent occurrence in the decay of radionuclides, and the Monte Carlo estimates of specific absorbed fractions may be statistically unreliable at 10 keV or even at a higher energy. In all cases these estimates can be supplied by use of the buildup factor or by alternative methods for photon energies of 15 keV or greater. However, at 10 keV no tabulation of the buildup factor is available. Thus, it is necessary to consider extrapolation procedures based on data at some higher energy which may be at or in excess of 10 keV.

The geometrical relations of the source and target organs can be grouped under one of the following three situations:

1. Source and target organs are distinct and without overlap, e.g., source in kidneys with liver as the target or source in yellow bone marrow with endosteal cells on cancellous surfaces as target. In this latter case undoubtedly there is some irradiation of these endosteal cells, if only because some fraction of the yellow marrow is present along with red marrow in most bones. However, the amount is not a large fraction of the total yellow marrow, and thus this irradiation makes a small contribution to the average dose to the endosteal cells. In all such cases it is assumed that the specific absorbed fraction extrapolates to zero as photon energy decreases, that is, if Φ^* denotes the value of the specific absorbed fraction at the lowest tabular energy, E^*, available, then it is assumed that at any energy $E < E^*$,

$$\Phi(E) = \Phi^* \frac{E}{E^*} .$$

2. The target organ may be a part of the source organ, e.g., source in total body with liver as target organ or source in the red bone marrow with target as endosteal cells on cancellous bone surfaces. As energy approaches zero and for organs of macroscopic size, it will generally be true that the energy produced in the organ is absorbed in the organ. Thus, since the activity is assumed to be uniform in the source organ, the limiting value of ϕ will be M_T/M_S where M_T is the mass of the target organ. Using the same notation as above,

$$\Phi = \Phi^* + \frac{\left(\Phi^* - \frac{1}{M_S}\right)(E - E^*)}{E^*} .$$

This formula also applies when source organ and target organ are identical and may be used for endosteal cells on cancellous bone surfaces as target with red bone marrow as source. Indeed, these cells are virtually surrounded by the active marrow, and, hence, the dose should be much the same unless the mean free path of the photons is of subcellular dimensions. At very low energies this will occur, but the formula given above is more likely throughout most of the energy range.

3. The source organ may be a part of the target organ, e.g., liver as source organ and total body as target organ or red bone marrow as source and total bone marrow as target. The limit of Φ as the photon energy approaches zero would be $1/M_T$ according to the principle mentioned in 2 above since $\phi(T \leftarrow S) \geqq \phi(S \leftarrow S)$ which approaches 1 as energy goes to zero. Accordingly, using the notation defined previously,

$$\Phi = \Phi^* + \left(\Phi^* - \frac{1}{M_T}\right) \frac{(E - E^*)}{E^*} .$$

It will be noted that the formulas given in paragraphs 2 and 3 above become identical if the source and target organs are the same.

Photons with energy in excess of 4 MeV are not of frequent occurrence, but the computer code does contain a formula which will extrapolate linearly on the values of the specific absorbed fraction at 2 MeV and at 4 MeV. Thus,

$$\Phi = \Phi_4 + (\Phi_4 - \Phi_2) \frac{E - 4}{2}$$

where Φ_2 and Φ_4 denote the values of Φ at 2 MeV and 4 MeV and the formula is only used if $E > 4$ MeV and if the value of Φ is positive, 0 being used in the contrary case.

References

Berger, M. J. (1968), "Energy Deposition in Water by Photons from Point Isotropic Sources," MIRD Pamphlet No. 2, Suppl. No. 1, J. Nucl. Med., 15.

Loevinger, R., and M. Berman (1968), "A Schema for Absorbed-Dose Calculations for Biologically Distributed Radionuclides," MIRD Pamphlet No. 1, Suppl. No. 1, J. Nucl. Med., 7.

Snyder, W. S. (1970), "Estimation of Absorbed Fraction of Energy from Photon Sources in Body Organs," Medical Radionuclides: Radiation Dose and Effects (USAEC Division of Technical Information, Oak Ridge), p. 33.

Snyder, W. S., et al. (1969), "Estimates of Absorbed Fractions for Monoenergetic Photon Sources Uniformly Distributed in Various Organs of a Heterogeneous Phantom," MIRD Pamphlet No. 5, Suppl. No. 3, J. Nucl. Med. 10, 5.

Snyder, W. S., Mary R. Ford, and G. G. Warner (1970), "Estimation of Dose and Dose Commitment to Bladder Wall from a Radionuclide Present in Urine," Health Phys. Div. Annual Progress Report for Period Ending July 31, 1970, ORNL-4584, p. 206.

Table A-3. Specific Absorbed Fraction of Photon Energy

SPECIFIC ABSORBED FRACTION OF PHOTON ENERGY

SOURCE IN ADRENALS

TARGET	ENERGY (MEV) 0.010	0.015	0.020	0.030	0.050	0.100
ADRENALS	5.22E-02	3.29E-02	1.89E-02	7.04E-03	2.23E-03	1.33E-03
BLADDER WALL	6.50E-25 b	9.75E-25 a	1.29E-14 a	1.72E-09 a	1.24E-07 a	5.60E-07
G. I. TRACT, STOMACH WALL	1.40E-10 b	2.10E-10 a	5.09E-07	5.45E-06	1.20E-05	1.14E-05
G. I. TRACT, SMALL INTESTINE PLUS CONTENTS	2.15E-14 b	3.23E-14 a	1.46E-09 a	3.57E-07	2.16E-06	3.20E-06
G. I. TRACT, UPPER LARGE INTESTINE WALL	1.15E-14 b	1.72E-14 a	1.38E-08 a	4.45E-07	2.72E-06	3.71E-06
G. I. TRACT, LOWER LARGE INTESTINE WALL	2.01E-17 b	3.02E-17 a	2.42E-11 a	3.56E-08 a	4.24E-07	8.26E-07
KIDNEYS	4.23E-06	3.71E-05	7.53E-05	9.37E-05	5.91E-05	4.25E-05
LIVER	2.73E-07	4.14E-06	1.28E-05	2.64E-05	2.55E-05	1.93E-05
LUNGS (USED FOR RESPIRATORY LYMPH NODES)	3.19E-07 b	4.79E-07	3.07E-06	1.03E-05	1.20E-05	9.49E-06
'OTHER TISSUES' (USED FOR MUSCLE)	4.01E-06 c	9.56E-06 c	1.22E-05 c	1.07E-05 c	7.09E-06 c	5.32E-06 c
OVARIES	1.98E-20 b	2.97E-20 a	2.37E-12 a	2.44E-08 a	6.42E-07 a	2.49E-06
PANCREAS	3.02E-08 b	4.54E-08 a	7.51E-06	3.84E-05	4.75E-05	3.69E-05
SKELETON (USED FOR BONE AND TOTAL ENDOSTEAL CELLS)	4.40E-07	6.61E-07	5.02E-06	1.43E-05	1.61E-05	8.76E-06
RED MARROW	6.60E-07 b	9.90E-07	7.43E-06	2.24E-05	2.78E-05	1.58E-05
YELLOW MARROW	4.01E-07 b	6.02E-07	4.75E-06	1.32E-05	1.50E-05	8.32E-06
SKIN	6.52E-08 b	9.78E-08	7.85E-07	2.11E-06	2.14E-06	1.82E-06
SPLEEN	4.17E-07 b	6.26E-07	7.29E-06	3.22E-05	3.48E-05	2.41E-05
TESTES	7.09E-33 b	1.06E-32 a	2.08E-18 a	2.80E-11 a	1.06E-08 a	8.90E-08 a
THYMUS	9.75E-19 b	1.46E-18 a	1.40E-11 a	5.72E-08 a	1.24E-06	1.66E-06
THYROID	2.12E-26 b	3.18E-26 a	2.74E-15 a	9.08E-10 a	8.81E-08 a	4.04E-07 a
UTERUS	1.96E-21 b	2.93E-21 a	9.11E-13 a	1.61E-08 a	2.62E-07	8.42E-07
TOTAL BODY	1.43E-05	1.43E-05	1.41E-05	1.26E-05	9.31E-06	6.49E-06

TARGET	ENERGY (MEV) 0.200	0.500	1.000	1.500	2.000	4.000
ADRENALS	1.45E-03	1.57E-03	1.51E-03	1.35E-03	1.32E-03	1.01E-03
BLADDER WALL	4.32E-07	3.68E-07	8.65E-07	8.44E-07 a	9.19E-07	1.07E-06
G. I. TRACT, STOMACH WALL	1.05E-05	1.01E-05	9.67E-06	8.16E-06	6.87E-06	6.43E-06
G. I. TRACT, SMALL INTESTINE PLUS CONTENTS	3.04E-06	3.31E-06	3.11E-06	3.45E-06	3.14E-06	2.59E-06
G. I. TRACT, UPPER LARGE INTESTINE WALL	3.29E-06	3.60E-06	3.77E-06	2.88E-06	3.52E-06	2.67E-06
G. I. TRACT, LOWER LARGE INTESTINE WALL	8.17E-07	1.23E-06	8.03E-07	1.30E-06	1.40E-06	1.11E-06
KIDNEYS	4.12E-05	3.95E-05	3.59E-05	3.07E-05	3.14E-05	2.54E-05
LIVER	1.76E-05	1.68E-05	1.50E-05	1.45E-05	1.37E-05	1.08E-05
LUNGS (USED FOR RESPIRATORY LYMPH NODES)	8.91E-06	7.98E-06	7.72E-06	7.42E-06	6.80E-06	5.52E-06
'OTHER TISSUES' (USED FOR MUSCLE)	5.17E-06 c	5.26E-06 c	4.99E-06 c	4.71E-06 c	4.42E-06 c	3.68E-06 c
OVARIES	2.10E-06	1.88E-06 a	1.81E-06 a	2.61E-07	1.67E-06 a	1.45E-06 a
PANCREAS	3.03E-05	2.88E-05	2.83E-05	2.59E-05	2.38E-05	2.02E-05
SKELETON (USED FOR BONE AND TOTAL ENDOSTEAL CELLS)	5.64E-06	4.70E-06	4.37E-06	4.01E-06	3.83E-06	3.23E-06
RED MARROW	1.03E-05	8.43E-06	7.71E-06	7.03E-06	6.79E-06	5.79E-06
YELLOW MARROW	5.44E-06	4.54E-06	4.25E-06	3.91E-06	3.83E-06	3.21E-06
SKIN	2.09E-06	2.34E-06	2.44E-06	2.43E-06	2.10E-06	1.83E-06
SPLEEN	2.37E-05	2.22E-05	1.95E-05	1.69E-05	1.69E-05	1.31E-05
TESTES	1.67E-07 a	2.44E-07 a	3.02E-07 a	3.28E-07 a	3.43E-07 a	3.44E-07 a
THYMUS	1.36E-06	3.29E-06	2.02E-06	2.02E-06	2.20E-06	1.80E-06 a
THYROID	5.85E-07 a	6.83E-07 a	7.34E-07 a	8.42E-07	7.39E-07 a	6.85E-07 a
UTERUS	8.66E-06	1.28E-06	1.71E-06	1.47E-06	8.54E-07	1.14E-06
TOTAL BODY	5.86E-06	5.79E-06	5.46E-06	5.12E-06	4.84E-06	4.00E-06

a-BUILD UP FACTOR METHOD.
b-EXTRAPOLATED FROM HIGHER ENERGY.
c-CALCULATED BY DIFFERENCE.
d-ADJUSTMENT ON COMPOSITION OR DENSITY.

SPECIFIC ABSORBED FRACTION OF PHOTON ENERGY

SOURCE IN BLADDER CONTENTS

TARGET	ENERGY (MEV) 0.010	0.015	0.020	0.030	0.050	0.100
ADRENALS	2.68E-25 b	4.01E-25 a	8.92E-15 a	1.56E-09 a	1.20E-07 a	5.07E-07 a
BLADDER WALL	8.49E-04	1.40E-03	1.43E-03	9.83E-04	4.49E-04	2.56E-04
G. I. TRACT, STOMACH WALL	2.83E-18 b	4.25E-18 a	1.20E-11 a	3.28E-08 a	4.53E-07	1.05E-06
G. I. TRACT, SMALL INTESTINE PLUS CONTENTS	1.52E-10 b	2.28E-10 a	1.76E-07	5.11E-06	1.24E-05	1.22E-05
G. I. TRACT, UPPER LARGE INTESTINE WALL	1.71E-10 b	2.57E-10 a	1.02E-07 a	3.04E-06	8.59E-06	8.31E-06
G. I. TRACT, LOWER LARGE INTESTINE WALL	3.42E-07 b	5.12E-07	7.80E-06	3.51E-05	4.16E-05	3.01E-05
KIDNEYS	1.52E-19 b	2.28E-19 a	3.95E-12 a	2.46E-08 a	4.05E-07	9.98E-07
LIVER	2.61E-19 b	3.91E-19 a	2.37E-12 a	2.05E-08	2.72E-07	5.55E-07
LUNGS (USED FOR RESPIRATORY LYMPH NODES)	4.26E-29 b	6.39E-29 a	5.55E-17 a	7.65E-11 a	1.31E-08	8.89E-08
'OTHER TISSUES' (USED FOR MUSCLE)	2.00E-07 c	2.02E-06 c	5.42E-06 c	9.69E-06 c	9.26E-06 c	6.86E-06 c
OVARIES	6.23E-09 b	9.35E-09 a	1.62E-06 a	2.78E-05	3.58E-05	2.82E-05
PANCREAS	3.63E-22 b	5.45E-22 a	2.11E-13 a	6.51E-09 a	2.92E-07	7.24E-07
SKELETON (USED FOR BONE AND TOTAL ENDOSTEAL CELLS)	2.56E-11	3.84E-11	1.60E-08	1.16E-06	4.30E-06	4.06E-06
RED MARROW	2.84E-08 b	4.25E-08 b	5.67E-08	3.88E-06	1.23E-05	1.00E-05
YELLOW MARROW	9.45E-09 b	1.42E-08 b	1.89E-08	1.33E-06	4.52E-06	3.90E-06
SKIN	2.66E-08 b	3.99E-08	3.75E-07	1.70E-06	2.26E-06	2.12E-06
SPLEEN	2.63E-22 b	3.94E-22 a	1.52E-13 a	4.78E-09 a	1.96E-07	3.87E-06
TESTES	1.79E-09 b	2.69E-09 a	1.39E-06	1.54E-05	2.75E-05	1.88E-05
THYMUS	5.91E-37 b	8.87E-37 a	1.32E-20 a	2.05E-12 a	2.06E-09 a	2.67E-08 a
THYROID	6.20E-25 b	9.31E-25 b	1.24E-24 a	2.86E-14 a	1.55E-10 a	4.05E-09 a
UTERUS	3.88E-06 b	5.83E-06	4.28E-05	1.09E-04	1.02E-04	6.21E-05
TOTAL BODY	1.43E-05	1.43E-05	1.42E-05	1.31E-05	1.00E-05	7.28E-06

TARGET	ENERGY (MEV) 0.200	0.500	1.000	1.500	2.000	4.000
ADRENALS	7.04E-07 a	7.97E-07 a	8.39E-07 a	8.41E-07 a	8.33E-07 a	7.63E-07 a
BLADDER WALL	2.47E-04	2.56E-04	2.22E-04	2.07E-04	1.97E-04	1.57E-04
G. I. TRACT, STOMACH WALL	1.02E-06	1.10E-06	1.86E-06	1.30E-06	1.83E-06	1.53E-06
G. I. TRACT, SMALL INTESTINE PLUS CONTENTS	1.03E-05	8.97E-06	8.84E-06	8.17E-06	8.42E-06	6.65E-06
G. I. TRACT, UPPER LARGE INTESTINE WALL	8.37E-06	8.18E-06	6.19E-06	6.15E-06	5.80E-06	5.29E-06
G. I. TRACT, LOWER LARGE INTESTINE WALL	2.51E-05	2.44E-05	2.09E-05	2.16E-05	2.02E-05	1.36E-05
KIDNEYS	1.00E-06	1.33E-06	1.17E-06	1.69E-06	1.26E-06	1.37E-06
LIVER	7.70E-07	9.76E-07	1.02E-06	9.60E-07	1.19E-06	1.04E-06
LUNGS (USED FOR RESPIRATORY LYMPH NODES)	9.33E-08	1.65E-07	2.83E-07	3.07E-07	3.31E-07	4.61E-07
'OTHER TISSUES' (USED FOR MUSCLE)	6.28E-06 c	6.13E-06 c	5.71E-06 c	5.42E-06 c	5.11E-06 c	4.27E-06 c
OVARIES	2.72E-05	2.17E-05	1.35E-05	2.31E-05	1.66E-05	1.48E-05
PANCREAS	1.10E-06	8.92E-07	1.00E-06	8.00E-07	1.40E-06	8.26E-07
SKELETON (USED FOR BONE AND TOTAL ENDOSTEAL CELLS)	2.70E-06	2.03E-06	1.78E-06	1.72E-06	1.71E-06	1.55E-06
RED MARROW	6.10E-06	4.33E-06	3.72E-06	3.47E-06	3.36E-06	3.07E-06
YELLOW MARROW	2.49E-06	1.85E-06	1.65E-06	1.57E-06	1.66E-06	1.51E-06
SKIN	2.01E-06	2.24E-06	2.35E-06	2.22E-06	2.12E-06	1.89E-06
SPLEEN	5.29E-07	7.80E-07	8.59E-07	6.34E-07	1.12E-06	4.63E-07
TESTES	1.59E-05	1.75E-05	1.57E-05	1.28E-05	1.40E-05	1.21E-05
THYMUS	6.22E-08 a	1.10E-07 a	1.54E-07 a	1.78E-07 a	1.94E-07 a	2.10E-07 a
THYROID	1.33E-08 a	3.27E-08 a	5.68E-08 a	7.33E-08 a	8.55E-08 a	1.05E-07 a
UTERUS	5.51E-05	5.11E-05	4.68E-05	3.98E-05	4.04E-05	3.30E-05
TOTAL BODY	6.58E-06	6.44E-06	5.98E-06	5.63E-06	5.35E-06	4.44E-06

a-BUILD UP FACTOR METHOD.
b-EXTRAPOLATED FROM HIGHER ENERGY.
c-CALCULATED BY DIFFERENCE.
d-ADJUSTMENT ON COMPOSITION OR DENSITY.

SPECIFIC ABSORBED FRACTION OF PHOTON ENERGY

SOURCE IN STOMACH CONTENTS

TARGET	ENERGY (MEV) 0.010	0.015	0.020	0.030	0.050	0.100
ADRENALS	4.32E-11 b	6.48E-11 a	1.05E-07 a	3.44E-06	1.21E-05	1.15E-05
BLADDER WALL	1.61E-18 b	2.41E-18 a	8.64E-12 a	2.82E-08 a	5.32E-07	1.17E-06
G. I. TRACT, STOMACH WALL	3.21E-04	7.61E-04	8.96E-04	6.87E-04	3.28E-04	1.88E-04
G. I. TRACT, SMALL INTESTINE PLUS CONTENTS	1.99E-07 b	2.99E-07	1.23E-06	6.72E-06	1.22E-05	1.08E-05
G. I. TRACT, UPPER LARGE INTESTINE WALL	8.09E-07 b	1.21E-06	5.67E-06	1.62E-05	1.90E-05	1.40E-05
G. I. TRACT, LOWER LARGE INTESTINE WALL	1.71E-09 b	2.56E-09 a	2.80E-07	1.83E-06	4.78E-06	4.44E-06
KIDNEYS	3.83E-10 b	5.74E-10 a	4.17E-07	8.18E-06	1.65E-05	1.36E-05
LIVER	2.14E-07 b	3.22E-07 b	4.29E-07	3.99E-06	8.27E-06	8.06E-06
LUNGS (USED FOR RESPIRATORY LYMPH NODES)	1.76E-07 b	2.64E-07	2.60E-06	7.91E-06	9.61E-06	6.92E-06
'OTHER TISSUES' (USED FOR MUSCLE)	3.98E-08 c	1.15E-06 c	3.92E-06 c	7.64E-06 c	7.31E-06 c	5.37E-06 c
OVARIES	1.99E-14 b	2.98E-14 a	1.05E-09 a	2.89E-07 a	2.36E-06 a	2.13E-06
PANCREAS	8.30E-06 b	1.24E-05	6.95E-05	1.40E-04	1.12E-04	7.10E-05
SKELETON (USED FOR BONE AND TOTAL ENDOSTEAL CELLS)	3.86E-08	5.79E-08	6.31E-07	3.05E-06	5.52E-06	4.00E-06
RED MARROW	4.00E-08 b	6.00E-08	6.67E-07	3.65E-06	8.53E-06	7.12E-06
YELLOW MARROW	5.25E-08 b	7.88E-08	8.62E-07	4.36E-06	8.10E-06	5.62E-06
SKIN	1.38E-08 b	2.07E-08	3.62E-07	1.53E-06	1.94E-06	1.66E-06
SPLEEN	1.12E-07 b	1.69E-07 a	1.06E-05	5.19E-05	5.98E-05	3.96E-05
TESTES	3.42E-26 b	5.13E-26 a	1.89E-15 a	5.20E-10 a	5.50E-08 a	1.58E-07
THYMUS	2.19E-18 b	3.29E-18 a	1.18E-11 a	3.41E-08 a	1.58E-06	1.07E-06
THYROID	5.67E-26 b	8.51E-26 a	2.27E-15 a	5.70E-10 a	5.82E-08 a	2.59E-07
UTERUS	7.51E-16 b	1.13E-15 a	2.81E-10 a	1.90E-07 a	1.45E-06	2.90E-06
TOTAL BODY	1.43E-05	1.43E-05	1.42E-05	1.31E-05	9.75E-06	6.87E-06

TARGET	ENERGY (MEV) 0.200	0.500	1.000	1.500	2.000	4.000
ADRENALS	8.53E-06	7.28E-06	7.02E-06	1.15E-05	7.79E-06	5.16E-06
BLADDER WALL	7.91E-07	1.58E-06	1.65E-06	1.48E-06	1.03E-06	1.44E-06
G. I. TRACT, STOMACH WALL	1.78E-04	1.79E-04	1.65E-04	1.48E-04	1.41E-04	1.15E-04
G. I. TRACT, SMALL INTESTINE PLUS CONTENTS	9.27E-06	9.08E-06	8.16E-06	7.37E-06	7.66E-06	6.38E-06
G. I. TRACT, UPPER LARGE INTESTINE WALL	1.26E-05	1.13E-05	9.62E-06	1.17E-05	8.40E-06	7.91E-06
G. I. TRACT, LOWER LARGE INTESTINE WALL	4.65E-06	4.35E-06	4.53E-06	4.51E-06	3.98E-06	2.76E-06
KIDNEYS	1.26E-05	1.13E-05	1.06E-05	9.84E-06	8.97E-06	7.42E-06
LIVER	7.00E-06	7.02E-06	6.34E-06	6.15E-06	6.20E-06	4.89E-06
LUNGS (USED FOR RESPIRATORY LYMPH NODES)	5.97E-06	6.40E-06	5.72E-06	5.51E-06	4.91E-06	4.28E-06
'OTHER TISSUES' (USED FOR MUSCLE)	4.96E-06 c	4.84E-06 c	4.60E-06 c	4.38E-06 c	4.10E-06 c	3.45E-06 c
OVARIES	1.53E-06	1.70E-06	5.09E-06	3.02E-06 a	2.86E-06 a	2.42E-06 a
PANCREAS	6.37E-05	6.02E-05	5.23E-05	5.06E-05	4.40E-05	3.39E-05
SKELETON (USED FOR BONE AND TOTAL ENDOSTEAL CELLS)	2.59E-06	2.08E-06	1.89E-06	1.79E-06	1.73E-06	1.61E-06
RED MARROW	4.64E-06	3.61E-06	3.18E-06	2.90E-06	2.78E-06	2.66E-06
YELLOW MARROW	3.59E-06	2.90E-06	2.61E-06	2.56E-06	2.43E-06	2.23E-06
SKIN	1.67E-06	2.04E-06	2.07E-06	1.96E-06	2.09E-06	1.70E-06
SPLEEN	3.56E-05	3.26E-05	3.04E-05	2.80E-05	2.49E-05	1.84E-05
TESTES	2.41E-07	8.06E-08	5.72E-07 a	5.91E-07 a	5.95E-07 a	5.61E-07 a
THYMUS	8.91E-07	7.81E-07	2.87E-06	2.26E-06	1.65E-06	1.42E-06 a
THYROID	4.35E-07 a	5.26E-07 a	5.82E-07 a	5.96E-07 a	6.02E-07 a	5.67E-07 a
UTERUS	2.97E-06	3.08E-06	3.22E-06	3.28E-06	2.54E-06	4.00E-06
TOTAL BODY	6.21E-06	6.11E-06	5.74E-06	5.39E-06	5.07E-06	4.22E-06

a-BUILD UP FACTOR METHOD.
b-EXTRAPOLATED FROM HIGHER ENERGY.
c-CALCULATED BY DIFFERENCE.
d-ADJUSTMENT ON COMPOSITION OR DENSITY.

S P E C I F I C A B S O R B E D F R A C T I O N O F P H O T O N E N E R G Y

SOURCE IN SMALL INTESTINE PLUS CONTENTS

T A R G E T	E N E R G Y (MEV) 0.010	0.015	0.020	0.030	0.050	0.100
ADRENALS	2.15E-14 b	3.23E-14 a	1.46E-09 a	4.37E-07 a	2.72E-06	2.69E-06
BLADDER WALL	4.21E-10 b	6.32E-10 a	1.74E-07 a	5.86E-06	1.02E-05	1.02E-05
G. I. TRACT, STOMACH WALL	5.69E-07	1.80E-06	8.17E-06	1.42E-05	1.77E-05	1.45E-05
G. I. TRACT, SMALL INTESTINE PLUS CONTENTS	7.40E-04	6.61E-04	5.60E-04	3.71E-04	1.87E-04	1.13E-04
G. I. TRACT, UPPER LARGE INTESTINE WALL	4.50E-04	4.48E-04	3.95E-04	2.74E-04	1.42E-04	8.66E-05
G. I. TRACT, LOWER LARGE INTESTINE WALL	2.81E-05	5.12E-05	6.84E-05	6.33E-05	4.28E-05	2.82E-05
KIDNEYS	4.94E-09 b	7.41E-09 a	8.43E-07	6.92E-06	1.28E-05	1.30E-05
LIVER	7.60E-08	3.52E-07	1.33E-06	4.59E-06	7.67E-06	7.17E-06
LUNGS (USED FOR RESPIRATORY LYMPH NODES)	4.44E-18 b	6.67E-18 a	9.65E-12 a	6.31E-08	4.61E-07	7.93E-07
'OTHER TISSUES' (USED FOR MUSCLE)	6.96E-07 c	2.14E-06 c	4.24E-06 c	7.31E-06 c	7.49E-06 c	5.95E-06 c
OVARIES	1.38E-05 b	2.07E-05	4.43E-05	6.26E-05	6.51E-05	4.23E-05
PANCREAS	2.64E-11 b	3.96E-11 a	4.11E-08 a	2.45E-06	7.92E-06	8.13E-06
SKELETON (USED FOR BONE AND TOTAL ENDOSTEAL CELLS)	2.15E-07	7.10E-07	1.79E-06	5.23E-06	8.26E-06	5.61E-06
RED MARROW	9.04E-07	2.97E-06	7.39E-06	2.08E-05	3.06E-05	1.92E-05
YELLOW MARROW	3.01E-07	9.91E-07	2.47E-06	7.31E-06	1.17E-05	7.89E-06
SKIN	5.31E-08 b	7.96E-08 b	1.06E-07	7.67E-07	1.49E-06	1.52E-06
SPLEEN	2.12E-10 b	3.18E-10 a	6.00E-08 a	2.67E-06	5.11E-06	5.95E-06
TESTES	2.76E-18 b	4.13E-18 a	1.68E-11 a	4.80E-08 a	4.88E-07	1.10E-06
THYMUS	1.05E-26 b	1.58E-26 a	1.07E-15 a	4.01E-10 a	4.76E-08 a	2.52E-07 a
THYROID	4.34E-35 b	6.50E-35 a	1.11E-19 a	5.17E-12 a	3.48E-09 a	3.84E-08 a
UTERUS	1.36E-06 b	2.05E-06	1.97E-05	5.49E-05	5.74E-05	3.83E-05
TOTAL BODY	1.43E-05	1.43E-05	1.43E-05	1.37E-05	1.08E-05	7.82E-06

T A R G E T	E N E R G Y (MEV) 0.200	0.500	1.000	1.500	2.000	4.000
ADRENALS	5.77E-06	4.26E-06	3.86E-06	3.70E-06 a	4.33E-06	2.94E-06 a
BLADDER WALL	9.28E-06	1.18E-05	6.79E-06	1.07E-05	7.97E-06	5.56E-06
G. I. TRACT, STOMACH WALL	1.31E-05	1.16E-05	1.14E-05	1.08E-05	9.88E-06	7.84E-06
G. I. TRACT, SMALL INTESTINE PLUS CONTENTS	1.07E-04	1.07E-04	9.57E-05	9.07E-05	8.23E-05	6.68E-05
G. I. TRACT, UPPER LARGE INTESTINE WALL	8.23E-05	7.83E-05	7.21E-05	6.69E-05	6.31E-05	4.98E-05
G. I. TRACT, LOWER LARGE INTESTINE WALL	2.52E-05	2.32E-05	2.19E-05	2.03E-05	2.05E-05	1.63E-05
KIDNEYS	1.08E-05	1.09E-05	1.03E-05	8.67E-06	8.59E-06	6.26E-06
LIVER	6.64E-06	6.20E-06	6.11E-06	5.67E-06	5.48E-06	4.39E-06
LUNGS (USED FOR RESPIRATORY LYMPH NODES)	9.02E-07	1.16E-06	1.17E-06	1.07E-06	1.17E-06	1.13E-06
'OTHER TISSUES' (USED FOR MUSCLE)	5.51E-06 c	5.33E-06 c	5.00E-06 c	4.73E-06 c	4.43E-06 c	3.77E-06 c
OVARIES	3.75E-05	3.00E-05	3.39E-05	2.31E-05	2.13E-05	2.81E-05
PANCREAS	7.30E-06	7.17E-06	6.55E-06	5.08E-06	5.74E-06	5.21E-06
SKELETON (USED FOR BONE AND TOTAL ENDOSTEAL CELLS)	3.54E-06	2.69E-06	2.53E-06	2.34E-06	2.26E-06	1.95E-06
RED MARROW	1.16E-05	8.57E-06	7.78E-06	7.07E-06	6.77E-06	5.52E-06
YELLOW MARROW	4.94E-06	3.74E-06	3.48E-06	3.17E-06	3.07E-06	2.63E-06
SKIN	1.63E-06	1.83E-06	1.93E-06	1.97E-06	1.75E-06	1.54E-06
SPLEEN	5.55E-06	5.41E-06	5.05E-06	5.28E-06	5.01E-06	3.59E-06
TESTES	1.28E-06	1.24E-06	1.79E-06	1.92E-06	2.12E-06 a	1.18E-06
THYMUS	3.89E-07 a	4.81E-07 a	5.38E-07 a	5.54E-07 a	5.62E-07 a	5.34E-07 a
THYROID	8.31E-08 a	1.38E-07 a	1.85E-07 a	2.10E-07 a	2.26E-07 a	2.40E-07 a
UTERUS	3.31E-05	2.99E-05	2.71E-05	2.42E-05	2.21E-05	1.85E-05
TOTAL BODY	7.02E-06	6.74E-06	6.27E-06	5.92E-06	5.51E-06	4.60E-06

a-BUILD UP FACTOR METHOD.
b-EXTRAPOLATED FROM HIGHER ENERGY.
c-CALCULATED BY DIFFERENCE.
d-ADJUSTMENT ON COMPOSITION OR DENSITY.

SPECIFIC ABSORBED FRACTION OF PHOTON ENERGY

SOURCE IN UPPER LARGE INTESTINE CONTENTS

TARGET	ENERGY (MEV) 0.010	0.015	0.020	0.030	0.050	0.100
ADRENALS	5.76E-15 b	8.64E-15 a	1.11E-09 a	1.21E-06	3.19E-06	3.61E-06
BLADDER WALL	3.32E-10 b	4.97E-10 a	1.25E-07 a	3.87E-06	7.40E-06	8.92E-06
G. I. TRACT, STOMACH WALL	2.11E-06 b	3.16E-06	1.14E-05	2.22E-05	2.05E-05	1.49E-05
G. I. TRACT, SMALL INTESTINE PLUS CONTENTS	5.46E-06	5.06E-05	1.19E-04	1.50E-04	1.03E-04	6.49E-05
G. I. TRACT, UPPER LARGE INTESTINE WALL	3.63E-04	8.01E-04	8.62E-04	5.57E-04	2.61E-04	1.52E-04
G. I. TRACT, LOWER LARGE INTESTINE WALL	2.47E-06 b	3.70E-06	1.14E-05	1.81E-05	1.51E-05	1.30E-05
KIDNEYS	3.18E-10 b	4.77E-10 a	3.55E-07	5.76E-06	1.25E-05	1.14E-05
LIVER	1.58E-07 b	2.37E-07	1.93E-06	7.43E-06	1.18E-05	1.00E-05
LUNGS (USED FOR RESPIRATORY LYMPH NODES)	3.97E-18 b	5.95E-18 a	1.18E-11 a	7.16E-08	6.14E-07	9.96E-07
'OTHER TISSUES' (USED FOR MUSCLE)	7.42E-08 c	8.77E-07 c	3.19E-06 c	6.95E-06 c	7.28E-06 c	5.74E-06 c
OVARIES	2.01E-05 b	3.02E-05	5.33E-05	7.41E-05	5.59E-05	4.53E-05
PANCREAS	2.25E-11 b	3.38E-11 a	5.01E-08 a	2.71E-06	8.10E-06	9.01E-06
SKELETON (USED FOR BONE AND TOTAL ENDOSTEAL CELLS)	1.64E-07	2.47E-07	1.37E-06	4.87E-06	7.35E-06	5.08E-06
RED MARROW	6.91E-07 b	1.04E-06	5.73E-06	1.93E-05	2.62E-05	1.66E-05
YELLOW MARROW	2.30E-07 b	3.45E-07	1.92E-06	6.99E-06	1.08E-05	7.32E-06
SKIN	8.49E-10 b	1.34E-09 a	9.59E-08	9.69E-07	1.64E-06	1.52E-06
SPLEEN	5.77E-11 b	8.66E-11 a	5.09E-08 a	1.57E-06	6.08E-06	5.82E-06
TESTES	1.23E-17 b	1.85E-17 a	2.55E-11 a	4.81E-08 a	5.08E-07	9.33E-07
THYMUS	1.34E-26 b	2.02E-26 a	1.58E-15 a	5.43E-10 a	5.78E-08 a	3.51E-07
THYROID	5.27E-35 b	7.90E-35 a	1.59E-19 a	6.86E-12 a	4.15E-09 a	4.30E-08 a
UTERUS	4.28E-09 b	6.41E-09 a	1.21E-06	1.39E-05	2.81E-05	2.27E-05
TOTAL BODY	1.43E-05	1.43E-05	1.43E-05	1.35E-05	1.05E-05	7.61E-06

TARGET	ENERGY (MEV) 0.200	0.500	1.000	1.500	2.000	4.000
ADRENALS	3.27E-06	3.45E-06	4.16E-06	3.46E-06	3.08E-06	3.86E-06
BLADDER WALL	7.67E-06	6.53E-06	7.06E-06	4.83E-06	7.28E-06	4.26E-06
G. I. TRACT, STOMACH WALL	1.32E-05	1.24E-05	1.16E-05	9.48E-06	1.01E-05	7.76E-06
G. I. TRACT, SMALL INTESTINE PLUS CONTENTS	5.89E-05	5.61E-05	5.05E-05	4.54E-05	4.21E-05	3.29E-05
G. I. TRACT, UPPER LARGE INTESTINE WALL	1.47E-04	1.47E-04	1.39E-04	1.24E-04	1.18E-04	9.33E-05
G. I. TRACT, LOWER LARGE INTESTINE WALL	1.06E-05	1.03E-05	1.08E-05	8.63E-06	8.14E-06	5.99E-06
KIDNEYS	9.84E-06	9.32E-06	9.40E-06	8.59E-06	7.31E-06	6.25E-06
LIVER	9.31E-06	8.45E-06	8.11E-06	7.67E-06	7.24E-06	6.32E-06
LUNGS (USED FOR RESPIRATORY LYMPH NODES)	9.83E-07	1.17E-06	1.38E-06	1.43E-06	1.28E-06	1.13E-06
'OTHER TISSUES' (USED FOR MUSCLE)	5.22E-06 c	5.10E-06 c	4.80E-06 c	4.55E-06 c	4.36E-06 c	3.60E-06 c
OVARIES	4.10E-05	4.39E-05	2.31E-05	1.87E-05	3.33E-05	2.08E-05
PANCREAS	8.74E-06	6.11E-06	6.85E-06	6.31E-06	7.00E-06	7.77E-06
SKELETON (USED FOR BONE AND TOTAL ENDOSTEAL CELLS)	3.18E-06	2.49E-06	2.21E-06	2.13E-06	2.04E-06	1.75E-06
RED MARROW	9.96E-06	7.45E-06	6.40E-06	6.05E-06	5.86E-06	4.85E-06
YELLOW MARROW	4.53E-06	3.54E-06	3.14E-06	3.01E-06	2.82E-06	2.39E-06
SKIN	1.63E-06	1.92E-06	1.87E-06	1.86E-06	1.82E-06	1.76E-06
SPLEEN	5.01E-06	4.21E-06	4.55E-06	4.73E-06	3.66E-06	3.79E-06
TESTES	1.15E-06	1.78E-06	1.92E-06	1.30E-06	1.74E-06 a	1.51E-06 a
THYMUS	4.33E-07 a	5.27E-07 a	5.80E-07 a	5.94E-07 a	6.01E-07 a	5.66E-07 a
THYROID	9.11E-08 a	1.48E-07 a	1.95E-07 a	2.21E-07 a	2.37E-07 a	2.49E-07 a
UTERUS	1.68E-05	1.53E-05	1.53E-05	1.55E-05	1.44E-05	1.16E-05
TOTAL BODY	6.79E-06	6.57E-06	6.17E-06	5.77E-06	5.46E-06	4.50E-06

a-BUILD UP FACTOR METHOD.
b-EXTRAPOLATED FROM HIGHER ENERGY.
c-CALCULATED BY DIFFERENCE.
d-ADJUSTMENT ON COMPOSITION OR DENSITY.

S P E C I F I C A B S O R B E D F R A C T I O N O F P H O T O N E N E R G Y

SOURCE IN LOWER LARGE INTESTINE CONTENTS

T A R G E T	E N E R G Y (MEV) 0.010	0.015	0.020	0.030	0.050	0.100
ADRENALS	1.96E-17 b	2.94E-17 a	2.97E-11 a	4.55E-08 a	7.08E-07 a	1.13E-06
BLADDER WALL	1.38E-07 b	2.08E-07 a	6.01E-06	2.70E-05	3.34E-05	2.80E-05
G. I. TRACT, STOMACH WALL	1.25E-08 b	1.88E-08 a	8.62E-07	5.03E-06	7.97E-06	6.96E-06
G. I. TRACT, SMALL INTESTINE PLUS CONTENTS	2.42E-06	2.78E-05	6.14E-05	7.81E-05	5.42E-05	3.65E-05
G. I. TRACT, UPPER LARGE INTESTINE WALL	1.03E-05	2.22E-05	3.16E-05	3.07E-05	2.21E-05	1.61E-05
G. I. TRACT, LOWER LARGE INTESTINE WALL	5.53E-04	1.13E-03	1.16E-03	7.02E-04	2.97E-04	1.76E-04
KIDNEYS	4.24E-12 b	6.36E-12 a	1.31E-08 a	8.91E-07	2.59E-06	3.12E-06
LIVER	2.92E-17 b	4.38E-17 a	2.34E-11 a	3.25E-08	4.60E-07	8.95E-07
LUNGS (USED FOR RESPIRATORY LYMPH NODES)	2.61E-17 b	3.92E-20 a	4.15E-13 a	2.91E-09 a	1.15E-07	2.87E-07
'OTHER TISSUES' (USED FOR MUSCLE)	6.79E-08 c	1.35E-06 c	4.12E-06 c	7.92E-06 c	8.26E-06 c	6.51E-06 c
OVARIES	4.10E-05 b	6.16E-05	1.62E-04	1.77E-04	1.06E-04	6.25E-05
PANCREAS	1.71E-14 b	2.57E-14 a	1.18E-09 a	5.69E-07	1.69E-06	3.05E-06
SKELETON (USED FOR BONE AND TOTAL ENDOSTEAL CELLS)	4.30E-08	1.36E-06	5.69E-06	1.31E-05	1.30E-05	7.25E-06
RED MARROW	1.81E-07	5.70E-06	2.37E-05	5.24E-05	4.68E-05	2.28E-05
YELLOW MARROW	6.03E-08	1.90E-06	7.92E-06	1.78E-05	1.73E-05	9.00E-06
SKIN	8.10E-08	2.36E-07	4.75E-07	1.14E-06	1.88E-06	1.79E-06
SPLEEN	1.52E-12 b	2.29E-12 a	7.72E-09 a	5.72E-07	3.20E-06	3.22E-06
TESTES	4.67E-10 b	7.01E-10 a	2.21E-07 a	4.41E-06	8.59E-06	6.27E-06
THYMUS	1.02E-29 b	1.53E-29 a	2.27E-17 a	4.46E-11 a	1.03E-08 a	7.60E-08 a
THYROID	1.05E-37 b	1.58E-37 a	3.76E-21 a	7.26E-13 a	8.56E-10 a	1.26E-08 a
UTERUS	5.13E-09 b	7.69E-09 a	2.33E-06	2.25E-05	3.65E-05	2.79E-05
TOTAL BODY	1.43E-05	1.43E-05	1.43E-05	1.37E-05	1.08E-05	7.62E-06

T A R G E T	E N E R G Y (MEV) 0.200	0.500	1.000	1.500	2.000	4.000
ADRENALS	1.67E-06	1.70E-06 a	1.64E-06 a	1.56E-06 a	1.51E-06 a	1.32E-06 a
BLADDER WALL	2.34E-05	1.94E-05	1.62E-05	2.02E-05	1.67E-05	1.04E-05
G. I. TRACT, STOMACH WALL	6.34E-06	6.23E-06	4.98E-06	4.73E-06	5.49E-06	4.92E-06
G. I. TRACT, SMALL INTESTINE PLUS CONTENTS	3.32E-05	3.07E-05	2.84E-05	2.64E-05	2.51E-05	1.99E-05
G. I. TRACT, UPPER LARGE INTESTINE WALL	1.50E-05	1.45E-05	1.25E-05	1.35E-05	1.08E-05	9.87E-06
G. I. TRACT, LOWER LARGE INTESTINE WALL	1.74E-04	1.77E-04	1.62E-04	1.52E-04	1.39E-04	1.08E-04
KIDNEYS	3.47E-06	2.84E-06	3.08E-06	2.98E-06	3.54E-06	2.50E-06
LIVER	1.02E-06	1.19E-06	1.29E-06	1.50E-06	1.24E-06	1.18E-06
LUNGS (USED FOR RESPIRATORY LYMPH NODES)	3.14E-07	3.49E-07	5.49E-07	5.49E-07	7.81E-07	5.78E-07
'OTHER TISSUES' (USED FOR MUSCLE)	6.01E-06 c	5.84E-06 c	5.48E-06 c	5.18E-06 c	4.89E-06 c	4.09E-06 c
OVARIES	7.13E-05	5.42E-05	5.50E-05	5.02E-05	4.63E-05	3.51E-05
PANCREAS	2.49E-06	2.58E-06	2.43E-06	2.00E-06	2.48E-06	1.45E-06
SKELETON (USED FOR BONE AND TOTAL ENDOSTEAL CELLS)	4.49E-06	3.59E-06	3.25E-06	3.02E-06	2.97E-06	2.43E-06
RED MARROW	1.36E-05	1.07E-05	9.65E-06	8.77E-06	8.46E-06	6.82E-06
YELLOW MARROW	5.51E-06	4.44E-06	3.97E-06	3.78E-06	3.63E-06	2.92E-06
SKIN	1.89E-06	2.03E-06	2.05E-06	2.23E-06	2.03E-06	1.85E-06
SPLEEN	2.76E-06	3.24E-06	3.56E-06	3.05E-06	3.20E-06	2.22E-06
TESTES	7.25E-06	7.14E-06	4.86E-06	4.82E-06	6.10E-06	3.92E-06
THYMUS	1.39E-07 a	2.01E-07 a	2.51E-07 a	2.74E-07 a	2.89E-07 a	2.93E-07 a
THYROID	3.19E-08 a	6.26E-08 a	9.34E-08 a	1.13E-07 a	1.27E-07 a	1.45E-07 a
UTERUS	2.53E-05	1.91E-05	1.79E-05	1.78E-05	1.52E-05	1.29E-05
TOTAL BODY	6.77E-06	6.53E-06	6.10E-06	5.76E-06	5.44E-06	4.48E-06

a-BUILD UP FACTOR METHOD.
b-EXTRAPOLATED FROM HIGHER ENERGY.
c-CALCULATED BY DIFFERENCE.
d-ADJUSTMENT ON COMPOSITION OR DENSITY.

SPECIFIC ABSORBED FRACTION OF PHOTON ENERGY

SOURCE IN KIDNEYS

TARGET	ENERGY (MEV) 0.010	0.015	0.020	0.030	0.050	0.100
ADRENALS	4.70E-06	3.95E-05	8.11E-05	9.44E-05	6.31E-05	4.51E-05
BLADDER WALL	4.59E-19 b	6.88E-19 a	5.48E-12 a	2.72E-08 a	3.14E-07	1.04E-06
G. I. TRACT, STOMACH WALL	1.35E-09 b	2.03E-09 a	5.45E-07	7.99E-06	1.59E-05	1.47E-05
G. I. TRACT, SMALL INTESTINE PLUS CONTENTS	6.51E-09 b	9.77E-09 a	9.63E-07	6.48E-06	1.23E-05	1.14E-05
G. I. TRACT, UPPER LARGE INTESTINE WALL	7.46E-10 b	1.12E-09 a	3.70E-07	6.25E-06	1.17E-05	1.13E-05
G. I. TRACT, LOWER LARGE INTESTINE WALL	8.29E-12 b	1.24E-11 a	1.16E-08 a	6.63E-07	1.81E-06	2.49E-06
KIDNEYS	3.28E-03	2.74E-03	2.04E-03	1.03E-03	3.93E-04	2.35E-04
LIVER	4.43E-07 b	6.65E-07	4.68E-06	1.54E-05	1.95E-05	1.53E-05
LUNGS (USED FOR RESPIRATORY LYMPH NODES)	3.57E-08 b	5.36E-08 b	7.15E-08	1.18E-06	3.27E-06	3.37E-06
'OTHER TISSUES' (USED FOR MUSCLE)	1.42E-06 c	4.42E-06 c	7.39E-06 c	8.82E-06 c	6.78E-06 c	5.12E-06 c
OVARIES	3.68E-14 b	5.53E-14 a	1.76E-09 a	4.81E-07 a	3.71E-06	4.13E-06
PANCREAS	2.34E-08 b	3.51E-08 a	4.45E-06	2.44E-05	3.22E-05	2.63E-05
SKELETON (USED FOR BONE AND TOTAL ENDOSTEAL CELLS)	2.24E-07	3.36E-07	2.18E-06	7.54E-06	1.03E-05	6.40E-06
RED MARROW	5.99E-07 b	8.99E-07	5.72E-06	2.01E-05	2.76E-05	1.69E-05
YELLOW MARROW	2.71E-07 b	4.06E-07	2.61E-06	8.98E-06	1.26E-05	7.82E-06
SKIN	1.66E-07 b	2.49E-07	1.16E-06	2.50E-06	2.23E-06	1.93E-06
SPLEEN	6.19E-06 b	9.28E-06	3.63E-05	6.69E-05	5.32E-05	3.30E-05
TESTES	4.39E-27 b	6.58E-27 a	8.52E-16 a	4.33E-10 a	5.25E-08 a	2.76E-07 a
THYMUS	7.07E-22 b	1.06E-21 a	2.52E-13 a	6.17E-09 a	3.51E-07	8.06E-07
THYROID	8.15E-30 b	1.22E-29 a	3.87E-17 a	9.30E-11 a	2.07E-08 a	1.40E-07 a
UTERUS	1.46E-15 b	2.19E-15 a	4.32E-10 a	3.26E-07	1.85E-06	3.31E-06
TOTAL BODY	1.43E-05	1.43E-05	1.40E-05	1.23E-05	9.01E-06	6.45E-06

TARGET	ENERGY (MEV) 0.200	0.500	1.000	1.500	2.000	4.000
ADRENALS	3.48E-05	4.28E-05	4.01E-05	3.61E-05	3.13E-05	2.59E-05
BLADDER WALL	1.12E-06	1.32E-06	1.59E-06	1.47E-06	1.13E-06	1.92E-06
G. I. TRACT, STOMACH WALL	1.20E-05	1.16E-05	1.07E-05	8.44E-06	1.00E-05	8.14E-06
G. I. TRACT, SMALL INTESTINE PLUS CONTENTS	1.02E-05	9.42E-06	9.02E-06	8.91E-06	8.05E-06	6.66E-06
G. I. TRACT, UPPER LARGE INTESTINE WALL	1.03E-05	9.90E-06	9.20E-06	9.23E-06	7.29E-06	6.25E-06
G. I. TRACT, LOWER LARGE INTESTINE WALL	3.05E-06	3.03E-06	2.84E-06	3.39E-06	2.93E-06	2.52E-06
KIDNEYS	2.39E-04	2.52E-04	2.26E-04	2.14E-04	1.93E-04	1.63E-04
LIVER	1.36E-05	1.38E-05	1.22E-05	1.15E-05	1.10E-05	8.79E-06
LUNGS (USED FOR RESPIRATORY LYMPH NODES)	2.99E-06	3.28E-06	3.30E-06	2.96E-06	2.80E-06	2.72E-06
'OTHER TISSUES' (USED FOR MUSCLE)	4.95E-06 c	4.93E-06 c	4.71E-06 c	4.47E-06 c	4.22E-06 c	3.55E-06 c
OVARIES	4.44E-06	3.96E-06	5.43E-06	3.83E-06 a	3.59E-06 a	1.77E-08
PANCREAS	2.28E-05	2.25E-05	2.24E-05	1.96E-05	1.50E-05	1.47E-05
SKELETON (USED FOR BONE AND TOTAL ENDOSTEAL CELLS)	4.06E-06	3.39E-06	3.10E-06	2.99E-06	2.76E-06	2.46E-06
RED MARROW	1.05E-05	8.59E-06	7.77E-06	7.43E-06	6.81E-06	5.85E-06
YELLOW MARROW	5.00E-06	4.22E-06	3.84E-06	3.66E-06	3.36E-06	2.98E-06
SKIN	2.06E-06	2.29E-06	2.24E-06	2.13E-06	2.15E-06	1.89E-06
SPLEEN	3.11E-05	2.85E-05	2.70E-05	2.41E-05	2.20E-05	1.73E-05
TESTES	4.23E-07 a	5.18E-07 a	5.77E-07 a	5.93E-07 a	5.98E-07 a	5.65E-07 a
THYMUS	6.92E-07	1.41E-06	2.72E-07	1.13E-06 a	4.67E-07	9.90E-07 a
THYROID	2.42E-07 a	3.27E-07 a	3.86E-07 a	4.11E-07 a	4.24E-07 a	4.15E-07 a
UTERUS	3.91E-06	2.87E-06	2.77E-06	3.66E-06	1.95E-06	3.98E-06
TOTAL BODY	5.90E-06	5.84E-06	5.48E-06	5.21E-06	4.87E-06	4.12E-06

a-BUILD UP FACTOR METHOD.
b-EXTRAPOLATED FROM HIGHER ENERGY.
c-CALCULATED BY DIFFERENCE.
d-ADJUSTMENT ON COMPOSITION OR DENSITY.

SPECIFIC ABSORBED FRACTION OF PHOTON ENERGY

SOURCE IN LIVER

TARGET	ENERGY (MEV) 0.010	0.015	0.020	0.030	0.050	0.100
ADRENALS	2.45E-06 b	3.68E-06 a	1.36E-05	2.68E-05	2.15E-05	1.61E-05
BLADDER WALL	5.75E-19 b	8.62E-19 a	3.52E-12 a	1.33E-08 a	2.04E-07	6.16E-07
G. I. TRACT, STOMACH WALL	3.85E-07 b	5.78E-07 b	7.71E-07	4.08E-06	8.90E-06	7.07E-06
G. I. TRACT, SMALL INTESTINE PLUS CONTENTS	1.62E-07 b	2.43E-07	7.70E-07	2.95E-06	6.39E-06	6.32E-06
G. I. TRACT, UPPER LARGE INTESTINE WALL	1.89E-07 b	2.84E-07	1.71E-06	8.56E-06	1.18E-05	1.01E-05
G. I. TRACT, LOWER LARGE INTESTINE WALL	2.73E-17 b	4.10E-17 a	2.02E-11 a	2.65E-08 a	3.34E-07	8.76E-07
KIDNEYS	8.39E-07 b	1.26E-06	4.50E-06	1.57E-05	1.95E-05	1.58E-05
LIVER	5.36E-04	4.96E-04	4.34E-04	2.97E-04	1.52E-04	9.14E-05
LUNGS (USED FOR RESPIRATORY LYMPH NODES)	7.76E-08	3.19E-06	9.46E-06	1.64E-05	1.45E-05	9.92E-06
'OTHER TISSUES' (USED FOR MUSCLE)	6.16E-07 c	1.92E-06 c	3.55E-06 c	5.52E-06 c	5.25E-06 c	4.09E-06 c
OVARIES	9.82E-15 b	1.47E-14 a	5.55E-10 a	1.63E-07 a	1.51E-06 a	1.63E-06
PANCREAS	1.47E-06 b	2.21E-06 b	2.94E-06	1.67E-05	2.18E-05	1.77E-05
SKELETON (USED FOR BONE AND TOTAL ENDOSTEAL CELLS)	5.83E-08	5.37E-07	2.08E-06	5.80E-06	7.80E-06	4.93E-06
RED MARROW	6.03E-08	5.27E-07	1.96E-06	5.68E-06	9.33E-06	7.14E-06
YELLOW MARROW	7.93E-08	7.77E-07	3.20E-06	9.33E-06	1.23E-05	7.33E-06
SKIN	5.76E-08 b	8.64E-08	4.77E-07	1.64E-06	1.89E-06	1.81E-06
SPLEEN	7.27E-13 b	1.09E-12 a	4.57E-09 a	8.07E-07	2.93E-06	3.56E-06
TESTES	2.17E-26 b	3.26E-26 a	9.37E-16 a	2.77E-10 a	3.42E-08 a	1.90E-07 a
THYMUS	6.31E-16 b	9.47E-16 a	1.59E-10 a	1.20E-07 a	1.67E-06	2.50E-06
THYROID	1.29E-24 b	1.94E-24 a	1.12E-14 a	1.21E-09 a	8.81E-08 a	3.80E-07 a
UTERUS	1.75E-16 b	2.62E-16 a	8.22E-11 a	8.39E-08 a	9.07E-07	1.51E-06
TOTAL BODY	1.43E-05	1.43E-05	1.42E-05	1.29E-05	9.48E-06	6.54E-06

TARGET	ENERGY (MEV) 0.200	0.500	1.000	1.500	2.000	4.000
ADRENALS	1.81E-05	1.68E-05	1.56E-05	1.36E-05	1.53E-05	1.83E-05
BLADDER WALL	5.60E-07	1.21E-06	5.80E-07	8.48E-07	9.02E-07	9.93E-07
G. I. TRACT, STOMACH WALL	6.96E-06	6.50E-06	6.44E-06	6.00E-06	6.11E-06	5.17E-06
G. I. TRACT, SMALL INTESTINE PLUS CONTENTS	6.01E-06	5.44E-06	5.16E-06	5.10E-06	4.64E-06	4.16E-06
G. I. TRACT, UPPER LARGE INTESTINE WALL	8.71E-06	8.84E-06	7.71E-06	6.52E-06	6.96E-06	5.21E-06
G. I. TRACT, LOWER LARGE INTESTINE WALL	8.55E-07	1.12E-06	8.88E-07	1.24E-06	9.53E-07	1.40E-06
KIDNEYS	1.36E-05	1.29E-05	1.18E-05	1.14E-05	1.10E-05	8.23E-06
LIVER	8.82E-05	8.85E-05	8.07E-05	7.48E-05	6.86E-05	5.58E-05
LUNGS (USED FOR RESPIRATORY LYMPH NODES)	8.84E-06	8.23E-06	7.90E-06	7.72E-06	6.96E-06	5.60E-06
'OTHER TISSUES' (USED FOR MUSCLE)	3.82E-06 c	3.85E-06 c	3.69E-06 c	3.46E-06 c	3.30E-06 c	2.80E-06 c
OVARIES	1.80E-06	6.53E-07	2.49E-06 a	3.44E-06	2.22E-06 a	1.92E-06 a
PANCREAS	1.35E-05	1.66E-05	1.36E-05	1.21E-05	9.99E-06	8.75E-06
SKELETON (USED FOR BONE AND TOTAL ENDOSTEAL CELLS)	3.17E-06	2.53E-06	2.30E-06	2.26E-06	2.20E-06	1.85E-06
RED MARROW	4.64E-06	3.72E-06	3.21E-06	3.26E-06	3.17E-06	2.62E-06
YELLOW MARROW	4.69E-06	3.70E-06	3.43E-06	3.37E-06	3.20E-06	2.67E-06
SKIN	1.89E-06	2.08E-06	2.08E-06	2.02E-06	2.10E-06	1.75E-06
SPLEEN	3.34E-06	3.44E-06	3.81E-06	2.95E-06	3.14E-06	2.14E-06
TESTES	3.05E-07 a	3.92E-07 a	8.76E-07	4.70E-07 a	4.79E-07 a	4.62E-07 a
THYMUS	2.27E-06	4.64E-06	2.54E-06	2.17E-06	2.65E-06	3.92E-06
THYROID	8.23E-07	6.32E-07 a	6.81E-07 a	6.87E-07 a	6.90E-07 a	6.40E-07 a
UTERUS	1.40E-06	1.52E-06	1.28E-06	2.07E-06	1.81E-06	1.38E-06
TOTAL BODY	5.94E-06	5.86E-06	5.49E-06	5.16E-06	4.86E-06	4.06E-06

a-BUILD UP FACTOR METHOD.
b-EXTRAPOLATED FROM HIGHER ENERGY.
c-CALCULATED BY DIFFERENCE.
d-ADJUSTMENT ON COMPOSITION OR DENSITY.

SPECIFIC ABSORBED FRACTION OF PHOTON ENERGY

SOURCE IN LUNGS (USED FOR RESPIRATORY LYMPH NODES)

TARGET	ENERGY (MEV) 0.010	0.015	0.020	0.030	0.050	0.100
ADRENALS	1.24E-06 b	1.86E-06 b	2.48E-06	7.17E-06	1.13E-05	1.09E-05
BLADDER WALL	3.53E-28 b	5.30E-28 d	2.65E-16 d	2.75E-10 d	5.21E-08 d	1.05E-07 a
G. I. TRACT, STOMACH WALL	5.37E-07 b	8.05E-07	3.45E-06	8.04E-06	9.44E-06	7.19E-06
G. I. TRACT, SMALL INTESTINE PLUS CONTENTS	1.65E-17 b	2.47E-17 d	2.92E-11 d	4.67E-08	3.60E-07	7.11E-07
G. I. TRACT, UPPER LARGE INTESTINE WALL	2.53E-17 b	3.80E-17 d	4.52E-11 d	7.70E-08	5.12E-07	8.35E-07
G. I. TRACT, LOWER LARGE INTESTINE WALL	6.26E-20 b	9.39E-20 d	1.13E-12 d	7.29E-09 d	8.32E-08	1.78E-07
KIDNEYS	6.42E-11 b	9.64E-11 d	5.81E-08 d	1.24E-06	2.97E-06	3.25E-06
LIVER	7.16E-08	2.28E-06	7.25E-06	1.40E-05	1.29E-05	9.52E-06
LUNGS (USED FOR RESPIRATORY LYMPH NODES)	8.17E-04	6.58E-04	4.71E-04	2.30E-04	8.99E-05	5.05E-05
'OTHER TISSUES' (USED FOR MUSCLE)	3.89E-06 c	6.82E-06 c	9.44E-06 c	1.00E-05 c	7.05E-06 c	4.87E-06 c
OVARIES	5.25E-24 b	7.88E-24 d	3.48E-14 d	3.13E-09 d	2.30E-07 d	3.02E-07 a
PANCREAS	8.53E-09 b	1.28E-08 d	6.38E-07	9.00E-06	1.27E-05	1.04E-05
SKELETON (USED FOR BONE AND TOTAL ENDOSTEAL CELLS)	2.71E-08	7.11E-07	3.56E-06	1.04E-05	1.20E-05	6.56E-06
RED MARROW	2.81E-08	7.53E-07	3.97E-06	1.20E-05	1.46E-05	8.36E-06
YELLOW MARROW	3.69E-08	9.48E-07	4.50E-06	1.21E-05	1.29E-05	6.75E-06
SKIN	4.70E-08 b	7.05E-08	6.44E-07	1.94E-06	2.19E-06	1.92E-06
SPLEEN	6.63E-07 b	9.95E-07	4.70E-06	1.27E-05	1.10E-05	9.05E-06
TESTES	8.51E-36 b	1.28E-35 d	5.76E-20 d	5.56E-12 d	5.03E-09 d	1.92E-08 a
THYMUS	2.22E-07 b	3.33E-07 d	3.35E-06	1.78E-05	2.09E-05	1.79E-05
THYROID	4.05E-12 b	6.07E-12 d	2.29E-08 d	8.09E-07	2.30E-06	3.85E-06
UTERUS	3.81E-25 b	5.72E-25 d	1.11E-14 d	2.07E-09 d	1.86E-07 d	2.80E-07
TOTAL BODY	1.43E-05	1.43E-05	1.41E-05	1.26E-05	8.78E-06	5.70E-06

TARGET	ENERGY (MEV) 0.200	0.500	1.000	1.500	2.000	4.000
ADRENALS	8.77E-06	8.40E-06	7.73E-06	5.94E-06	3.24E-06	5.59E-06
BLADDER WALL	1.83E-07 a	2.55E-07 a	3.09E-07 a	3.32E-07 a	3.43E-07 a	3.43E-07 a
G. I. TRACT, STOMACH WALL	6.61E-06	6.32E-06	6.34E-06	6.14E-06	6.45E-06	3.05E-06
G. I. TRACT, SMALL INTESTINE PLUS CONTENTS	7.14E-07	9.57E-07	1.08E-06	1.04E-06	1.16E-06	1.11E-06
G. I. TRACT, UPPER LARGE INTESTINE WALL	8.57E-07	1.32E-06	1.38E-06	1.45E-06	1.37E-06	1.75E-06
G. I. TRACT, LOWER LARGE INTESTINE WALL	4.05E-07	2.69E-07	3.21E-07	2.13E-07	2.34E-07	2.69E-07
KIDNEYS	3.14E-06	3.61E-06	3.22E-06	3.61E-06	2.31E-06	2.82E-06
LIVER	8.81E-06	8.18E-06	7.72E-06	7.20E-06	6.52E-06	5.78E-06
LUNGS (USED FOR RESPIRATORY LYMPH NODES)	5.00E-05	5.01E-05	4.55E-05	4.32E-05	3.92E-05	3.08E-05
'OTHER TISSUES' (USED FOR MUSCLE)	4.61E-06 c	4.62E-06 c	4.31E-06 c	4.04E-06 c	3.81E-06 c	3.17E-06 c
OVARIES	4.41E-07 a	5.28E-07 a	5.74E-07 a	5.87E-07 a	5.94E-07 a	5.58E-07 a
PANCREAS	8.94E-06	9.63E-06	7.11E-06	7.54E-06	5.86E-06	6.10E-06
SKELETON (USED FOR BONE AND TOTAL ENDOSTEAL CELLS)	4.08E-06	3.45E-06	3.17E-06	2.87E-06	2.93E-06	2.40E-06
RED MARROW	5.21E-06	4.35E-06	4.02E-06	3.69E-06	3.70E-06	3.02E-06
YELLOW MARROW	4.21E-06	3.64E-06	3.35E-06	2.90E-06	3.09E-06	2.51E-06
SKIN	2.10E-06	2.34E-06	2.30E-06	2.25E-06	2.16E-06	1.73E-06
SPLEEN	8.18E-06	7.31E-06	7.18E-06	5.31E-06	6.23E-06	5.61E-06
TESTES	4.62E-08 a	8.43E-08 a	1.22E-07 a	1.43E-07 a	1.58E-07 a	1.74E-07 a
THYMUS	1.42E-05	1.26E-05	1.37E-05	1.35E-05	1.17E-05	8.45E-06
THYROID	2.97E-06	4.15E-06	4.66E-06	2.75E-06	3.00E-06	2.64E-06 a
UTERUS	3.53E-07	3.29E-07	4.05E-07	9.28E-07	5.55E-07 a	9.39E-07
TOTAL BODY	5.11E-06	4.99E-06	4.66E-06	4.36E-06	4.12E-06	3.41E-06

a-BUILD UP FACTOR METHOD.
b-EXTRAPOLATED FROM HIGHER ENERGY.
c-CALCULATED BY DIFFERENCE.
d-ADJUSTMENT ON COMPOSITION OR DENSITY.

SPECIFIC ABSORBED FRACTION OF PHOTON ENERGY

SOURCE IN 'OTHER TISSUE' (USED FOR MUSCLE)-c

TARGET	ENERGY (MEV) 0.010	0.015	0.020	0.030	0.050	0.100
ADRENALS	4.01E-06	9.56E-06	1.22E-05	1.07E-05	7.09E-06	5.32E-06
BLADDER WALL	2.00E-07	2.02E-06	5.42E-06	9.69E-06	9.26E-06	6.86E-06
G. I. TRACT, STOMACH WALL	3.98E-08	1.15E-06	3.92E-06	7.64E-06	7.31E-06	4.60E-06
G. I. TRACT, SMALL INTESTINE PLUS CONTENTS	6.96E-07	2.14E-06	4.24E-06	7.31E-06	7.49E-06	5.95E-06
G. I. TRACT, UPPER LARGE INTESTINE WALL	4.38E-06	4.81E-06	6.20E-06	8.22E-06	7.74E-06	6.12E-06
G. I. TRACT, LOWER LARGE INTESTINE WALL	6.79E-08	1.35E-06	4.12E-06	7.92E-06	8.26E-06	6.51E-06
KIDNEYS	1.42E-06	4.42E-06	7.39E-06	8.82E-06	6.78E-06	5.12E-06
LIVER	6.16E-07	1.92E-06	3.55E-06	5.52E-06	5.25E-06	4.09E-06
LUNGS (USED FOR RESPIRATORY LYMPH NODES)	3.89E-06	6.82E-06	9.44E-06	1.00E-05	7.05E-06	4.87E-06
'OTHER TISSUES' (USED FOR MUSCLE)	1.81E-05	1.70E-05	1.52E-05	1.15E-05	7.13E-06	5.08E-06
OVARIES	4.11E-06	9.31E-06	1.19E-05	1.23E-05	1.00E-05	7.57E-06
PANCREAS	2.41E-06	6.73E-06	1.04E-05	1.21E-05	9.45E-06	6.87E-06
SKELETON (USED FOR BONE AND TOTAL ENDOSTEAL CELLS)	3.85E-07	9.43E-07	1.63E-06	3.06E-06	3.82E-06	3.66E-06
RED MARROW	2.01E-06	4.60E-06	8.73E-06	1.59E-05	1.56E-05	8.81E-06
YELLOW MARROW	1.68E-06	3.81E-06	7.91E-06	1.28E-05	1.23E-05	6.44E-06
SKIN	4.00E-06	6.06E-06	6.46E-06	5.41E-06	3.48E-06	2.60E-06
SPLEEN	1.18E-06	3.78E-06	6.79E-06	9.42E-06	7.63E-06	5.48E-06
TESTES	4.99E-08	7.21E-07	2.66E-06	5.71E-06	5.52E-06	4.28E-06
THYMUS	1.74E-05	2.52E-05	2.59E-05	1.31E-05	1.23E-05	5.93E-06
THYROID	3.35E-06	8.66E-06	1.19E-05	1.16E-05	7.22E-06	4.81E-06
UTERUS	2.02E-05	1.76E-05	1.80E-05	1.42E-05	1.16E-05	8.77E-06
TOTAL BODY	1.43E-05	1.37E-05	1.25E-05	9.93E-06	6.60E-06	4.86E-06

TARGET	ENERGY (MEV) 0.200	0.500	1.000	1.500	2.000	4.000
ADRENALS	5.17E-06	5.26E-06	4.99E-06	4.71E-06	4.42E-06	3.68E-06
BLADDER WALL	6.28E-06	6.13E-06	5.71E-06	5.42E-06	5.11E-06	4.27E-06
G. I. TRACT, STOMACH WALL	4.96E-06	4.84E-06	4.60E-06	4.38E-06	4.10E-06	3.45E-06
G. I. TRACT, SMALL INTESTINE PLUS CONTENTS	5.51E-06	5.33E-06	5.00E-06	4.73E-06	4.43E-06	3.77E-06
G. I. TRACT, UPPER LARGE INTESTINE WALL	5.73E-06	5.61E-06	5.31E-06	5.00E-06	4.68E-06	3.97E-06
G. I. TRACT, LOWER LARGE INTESTINE WALL	6.01E-06	5.84E-06	5.48E-06	5.18E-06	4.89E-06	4.09E-06
KIDNEYS	4.95E-06	4.93E-06	4.71E-06	4.47E-06	4.22E-06	3.55E-06
LIVER	3.82E-06	3.85E-06	3.69E-06	3.46E-06	3.30E-06	2.80E-06
LUNGS (USED FOR RESPIRATORY LYMPH NODES)	4.61E-06	4.62E-06	4.31E-06	4.04E-06	3.81E-06	3.17E-06
'OTHER TISSUES' (USED FOR MUSCLE)	5.03E-06	5.22E-06	4.99E-06	4.65E-06	4.36E-06	3.66E-06
OVARIES	7.02E-06	6.84E-06	6.40E-06	6.00E-06	5.65E-06	4.75E-06
PANCREAS	6.32E-06	6.20E-06	5.71E-06	5.43E-06	5.17E-06	4.20E-06
SKELETON (USED FOR BONE AND TOTAL ENDOSTEAL CELLS)	3.74E-06	3.82E-06	3.67E-06	3.54E-06	3.33E-06	2.83E-06
RED MARROW	5.58E-06	4.75E-06	4.26E-06	3.85E-06	3.95E-06	2.98E-06
YELLOW MARROW	4.31E-06	3.87E-06	3.50E-06	3.15E-06	3.14E-06	2.62E-06
SKIN	2.74E-06	3.14E-06	3.15E-06	2.96E-06	2.81E-06	2.37E-06
SPLEEN	5.14E-06	5.07E-06	4.79E-06	4.55E-06	4.23E-06	3.60E-06
TESTES	4.14E-06	4.27E-06	4.08E-06	3.97E-06	4.59E-06	3.20E-06
THYMUS	1.03E-05	5.77E-06	4.35E-06	7.16E-06	5.70E-06	6.00E-06
THYROID	4.63E-06	4.76E-06	4.45E-06	4.19E-06	3.94E-06	3.27E-06
UTERUS	8.30E-06	6.46E-06	8.93E-06	5.29E-06	7.01E-06	6.15E-06
TOTAL BODY	4.82E-06	4.97E-06	4.75E-06	4.45E-06	4.18E-06	3.51E-06

a-BUILD UP FACTOR METHOD.
b-EXTRAPOLATED FROM HIGHER ENERGY.
c-CALCULATED BY DIFFERENCE.
d-ADJUSTMENT ON COMPOSITION OR DENSITY.

SPECIFIC ABSORBED FRACTION OF PHOTON ENERGY

SOURCE IN OVARIES

TARGET	ENERGY (MEV) 0.010	0.015	0.020	0.030	0.050	0.100
ADRENALS	1.98E-20 b	2.97E-20 a	2.37E-12 a	2.44E-08 a	6.42E-07 a	1.16E-06
BLADDER WALL	1.79E-08 b	2.69E-08 a	3.42E-06	2.65E-05	3.99E-05	2.91E-05
G. I. TRACT, STOMACH WALL	8.09E-14 b	1.21E-13 a	2.07E-09 a	5.22E-07	2.40E-06	3.24E-06
G. I. TRACT, SMALL INTESTINE PLUS CONTENTS	2.87E-06	2.23E-05	5.91E-05	9.45E-05	7.22E-05	4.80E-05
G. I. TRACT, UPPER LARGE INTESTINE WALL	8.94E-06	6.76E-05	1.08E-04	1.03E-04	6.38E-05	4.16E-05
G. I. TRACT, LOWER LARGE INTESTINE WALL	9.94E-06	8.15E-05	1.46E-04	1.45E-04	8.86E-05	5.62E-05
KIDNEYS	3.71E-14 b	5.56E-14 a	1.90E-09 a	5.45E-07	2.64E-06	3.53E-06
LIVER	1.05E-14 b	1.58E-14 a	5.74E-10 a	2.42E-07	1.34E-06	2.00E-06
LUNGS (USED FOR RESPIRATORY LYMPH NODES)	5.12E-26 b	7.68E-26 a	1.02E-14 a	9.26E-10 a	8.58E-08	2.06E-07
'OTHER TISSUES' (USED FOR MUSCLE)	4.11E-06 c	9.31E-06 c	1.19E-05 c	1.23E-05 c	1.00E-05 c	7.57E-06 c
OVARIES	9.68E-02	5.91E-02	3.26E-02	1.15E-02	3.58E-03	2.22E-03
PANCREAS	4.74E-18 b	7.10E-18 a	3.03E-11 a	7.93E-08 a	8.55E-07	1.99E-06
SKELETON (USED FOR BONE AND TOTAL ENDOSTEAL CELLS)	2.70E-08	4.06E-08	1.39E-06	7.90E-06	1.14E-05	6.94E-06
RED MARROW	1.14E-07 b	1.71E-07	5.85E-06	3.28E-05	4.51E-05	2.50E-05
YELLOW MARROW	3.79E-08 b	5.69E-08	1.95E-06	1.11E-05	1.61E-05	9.46E-06
SKIN	8.61E-12 b	1.29E-11 a	1.85E-08	5.06E-07	1.35E-06	1.51E-06
SPLEEN	1.02E-16 b	1.53E-16 a	7.80E-11 a	9.57E-08	1.03E-06	1.77E-06
THYMUS	3.01E-33 b	4.51E-33 a	1.05E-18 a	1.83E-11 a	8.00E-09 a	7.16E-08 a
THYROID	2.30E-23 b	3.45E-23 b	4.61E-23 a	2.50E-13 a	5.98E-10 a	1.09E-08 a
UTERUS	1.82E-06 b	2.74E-06	5.12E-05	1.44E-04	1.26E-04	8.03E-05
TOTAL BODY	1.43E-05	1.43E-05	1.43E-05	1.39E-05	1.13E-05	8.10E-06

TARGET	ENERGY (MEV) 0.200	0.500	1.000	1.500	2.000	4.000
ADRENALS	1.34E-06	2.11E-06	1.85E-06	1.73E-06 a	1.67E-06 a	1.45E-06 a
BLADDER WALL	2.45E-05	2.29E-05	2.28E-05	2.04E-05	1.72E-05	1.47E-05
G. I. TRACT, STOMACH WALL	2.82E-06	2.90E-06	2.48E-06	3.25E-06	3.12E-06	3.13E-06
G. I. TRACT, SMALL INTESTINE PLUS CONTENTS	4.19E-05	4.07E-05	3.57E-05	3.34E-05	3.15E-05	2.51E-05
G. I. TRACT, UPPER LARGE INTESTINE WALL	3.99E-05	3.82E-05	3.36E-05	3.19E-05	2.97E-05	2.21E-05
G. I. TRACT, LOWER LARGE INTESTINE WALL	5.07E-05	4.88E-05	4.25E-05	4.02E-05	3.84E-05	3.37E-05
KIDNEYS	3.47E-06	3.92E-06	3.63E-06	3.32E-06	3.62E-06	2.98E-06
LIVER	2.11E-06	2.11E-06	2.17E-06	2.14E-06	2.30E-06	1.76E-06
LUNGS (USED FOR RESPIRATORY LYMPH NODES)	2.56E-07	3.88E-07	5.40E-07	5.62E-07	5.86E-07	7.01E-07
'OTHER TISSUES' (USED FOR MUSCLE)	7.02E-06 c	6.84E-06 c	6.40E-06 c	6.00E-06 c	5.65E-06 c	4.75E-06 c
OVARIES	2.48E-03	2.62E-03	2.42E-03	2.28E-03	2.12E-03	1.72E-03
PANCREAS	1.77E-06	1.90E-06	3.18E-06	1.76E-06	9.78E-07	2.66E-06
SKELETON (USED FOR BONE AND TOTAL ENDOSTEAL CELLS)	4.18E-06	3.18E-06	2.88E-06	2.69E-06	2.60E-06	2.16E-06
RED MARROW	1.43E-05	1.06E-05	9.34E-06	8.52E-06	8.06E-06	6.32E-06
YELLOW MARROW	5.57E-06	4.25E-06	3.81E-06	3.49E-06	3.35E-06	2.80E-06
SKIN	1.63E-06	1.81E-06	1.90E-06	1.75E-06	1.56E-06	1.52E-06
SPLEEN	1.99E-06	2.40E-06	2.05E-06	1.62E-06	2.52E-06	1.98E-06
THYMUS	1.40E-07 a	2.11E-07 a	2.66E-07 a	2.92E-07 a	3.08E-07 a	3.13E-07 a
THYROID	3.01E-08 a	6.22E-08 a	9.61E-08 a	1.17E-07 a	1.31E-07 a	1.51E-07 a
UTERUS	7.51E-05	6.18E-05	5.32E-05	4.86E-05	4.77E-05	3.91E-05
TOTAL BODY	7.16E-06	6.88E-06	6.38E-06	5.97E-06	5.65E-06	4.70E-06

a-BUILD UP FACTOR METHOD.
b-EXTRAPOLATED FROM HIGHER ENERGY.
c-CALCULATED BY DIFFERENCE.
d-ADJUSTMENT ON COMPOSITION OR DENSITY.

SPECIFIC ABSORBED FRACTION OF PHOTON ENERGY

SOURCE IN PANCREAS

TARGET	ENERGY (MEV) 0.010	0.015	0.020	0.030	0.050	0.100
ADRENALS	3.02E-08 b	4.54E-08 a	4.82E-06	3.96E-05	4.68E-05	3.82E-05
BLADDER WALL	9.31E-22 b	1.40E-21 a	3.01E-13 a	7.08E-09 a	1.68E-07	5.22E-07
G. I. TRACT, STOMACH WALL	2.26E-06	3.91E-05	1.10E-04	1.57E-04	1.13E-04	6.73E-05
G. I. TRACT, SMALL INTESTINE PLUS CONTENTS	2.59E-11 b	3.89E-11 a	4.01E-08 a	1.87E-06	6.39E-06	7.11E-06
G. I. TRACT, UPPER LARGE INTESTINE WALL	3.88E-11 b	5.82E-11 a	6.06E-08 a	2.79E-06	8.27E-06	8.32E-06
G. I. TRACT, LOWER LARGE INTESTINE WALL	1.41E-14 b	2.12E-14 a	8.81E-10 a	3.08E-07	1.73E-06	2.22E-06
KIDNEYS	2.26E-08 b	3.39E-08 a	3.23E-06	2.50E-05	3.37E-05	2.65E-05
LIVER	1.54E-07 b	2.30E-07	3.61E-06	1.64E-05	2.24E-05	1.76E-05
LUNGS (USED FOR RESPIRATORY LYMPH NODES)	2.75E-09 b	4.12E-09 a	1.16E-06	8.87E-06	1.29E-05	1.02E-05
'OTHER TISSUES' (USED FOR MUSCLE)	2.41E-06 c	6.73E-06 c	1.04E-05 c	1.21E-05 c	9.45E-06 c	6.87E-06 c
OVARIES	5.28E-18 b	7.92E-18 a	3.07E-11 a	7.99E-08 a	1.29E-06 a	1.82E-06
PANCREAS	1.47E-02	1.09E-02	7.14E-03	3.16E-03	1.10E-03	6.51E-04
SKELETON (USED FOR BONE AND TOTAL ENDOSTEAL CELLS)	3.77E-08	5.66E-08	7.68E-07	5.02E-06	9.58E-06	6.58E-06
RED MARROW	7.85E-08 b	1.18E-07	1.46E-06	9.15E-06	1.78E-05	1.27E-05
YELLOW MARROW	3.20E-08 b	4.80E-08	6.87E-07	5.33E-06	1.09E-05	7.58E-06
SKIN	7.33E-09 b	1.10E-08 b	1.47E-08	5.52E-07	1.39E-06	1.50E-06
SPLEEN	1.45E-06	4.48E-05	1.31E-04	1.79E-04	1.25E-04	7.62E-05
TESTES	9.66E-30 b	1.45E-29 a	4.87E-17 a	1.17E-10 a	2.50E-08 a	1.64E-07 a
THYMUS	1.99E-18 b	2.98E-18 a	1.78E-11 a	5.77E-08 a	1.70E-06	1.73E-06
THYROID	1.21E-26 b	1.81E-26 a	2.08E-15 a	7.82E-10 a	7.99E-08 a	3.78E-07 a
UTERUS	1.65E-18 b	2.48E-18 a	1.75E-11 a	1.10E-07	1.01E-06	1.79E-06
TOTAL BODY	1.43E-05	1.43E-05	1.43E-05	1.39E-05	1.11E-05	7.92E-06

TARGET	ENERGY (MEV) 0.200	0.500	1.000	1.500	2.000	4.000
ADRENALS	2.95E-05	2.93E-05	2.11E-05	2.44E-05	1.85E-05	1.31E-05
BLADDER WALL	5.61E-07	6.82E-07	4.03E-07	1.02E-06	1.51E-06	1.19E-06
G. I. TRACT, STOMACH WALL	6.54E-05	5.84E-05	5.40E-05	4.96E-05	4.54E-05	4.02E-05
G. I. TRACT, SMALL INTESTINE PLUS CONTENTS	6.67E-06	6.06E-06	5.90E-06	5.62E-06	5.27E-06	4.52E-06
G. I. TRACT, UPPER LARGE INTESTINE WALL	7.94E-06	7.43E-06	7.18E-06	6.76E-06	5.91E-06	5.04E-06
G. I. TRACT, LOWER LARGE INTESTINE WALL	2.06E-06	1.84E-06	1.85E-06	2.33E-06	1.54E-06	1.91E-06
KIDNEYS	2.27E-05	2.13E-05	1.94E-05	1.82E-05	1.63E-05	1.47E-05
LIVER	1.56E-05	1.41E-05	1.29E-05	1.21E-05	1.08E-05	9.50E-06
LUNGS (USED FOR RESPIRATORY LYMPH NODES)	8.92E-06	8.21E-06	7.43E-06	6.77E-06	6.54E-06	5.20E-06
'OTHER TISSUES' (USED FOR MUSCLE)	6.32E-06 c	6.20E-06 c	5.71E-06 c	5.43E-06 c	5.17E-06 c	4.20E-06 c
OVARIES	1.14E-06	1.28E-06	3.50E-06	2.37E-06 a	2.25E-06 a	1.94E-06 a
PANCREAS	6.88E-04	7.29E-04	6.74E-04	6.33E-04	5.72E-04	4.58E-04
SKELETON (USED FOR BONE AND TOTAL ENDOSTEAL CELLS)	4.00E-06	3.17E-06	2.86E-06	2.79E-06	2.60E-06	2.14E-06
RED MARROW	7.70E-06	5.97E-06	5.34E-06	5.14E-06	4.76E-06	3.87E-06
YELLOW MARROW	4.67E-06	3.72E-06	3.37E-06	3.30E-06	3.06E-06	2.49E-06
SKIN	1.57E-06	1.74E-06	1.90E-06	1.77E-06	1.69E-06	1.58E-06
SPLEEN	6.70E-05	6.59E-05	5.78E-05	5.34E-05	5.07E-05	3.75E-05
TESTES	2.76E-07 a	2.15E-07	4.28E-07 a	4.50E-07 a	4.61E-07 a	4.48E-07 a
THYMUS	3.07E-06	1.83E-06	1.75E-06	2.15E-06	2.05E-06 a	1.77E-06 a
THYROID	5.52E-07 a	6.49E-07 a	9.16E-08	7.11E-07 a	7.11E-07 a	6.61E-07 a
UTERUS	2.32E-06	2.17E-06	2.01E-06	1.87E-06	2.05E-06	1.42E-06
TOTAL BODY	6.99E-06	6.74E-06	6.22E-06	5.90E-06	5.55E-06	4.53E-06

a-BUILD UP FACTOR METHOD.
b-EXTRAPOLATED FROM HIGHER ENERGY.
c-CALCULATED BY DIFFERENCE.
d-ADJUSTMENT ON COMPOSITION OR DENSITY.

SPECIFIC ABSORBED FRACTION OF PHOTON ENERGY

SOURCE IN SKELETON (USED FOR CANCELLOUS BONE AND CORTICAL BONE)

TARGET	ENERGY (MEV) 0.010	0.015	0.020	0.030	0.050	0.100
ADRENALS	4.05E-07 b	6.08E-07 a	4.18E-06 a	3.11E-06	5.93E-06	3.82E-06
BLADDER WALL	2.27E-11 b	3.40E-11 a	2.00E-08 a	2.96E-07	1.51E-06	2.12E-06
G. I. TRACT, STOMACH WALL	1.45E-07 b	2.18E-07 b	2.90E-07	1.06E-06	1.73E-06	2.11E-06
G. I. TRACT, SMALL INTESTINE PLUS CONTENTS	1.52E-07 b	2.28E-07	5.01E-07	1.69E-06	3.09E-06	2.81E-06
G. I. TRACT, UPPER LARGE INTESTINE WALL	2.12E-07 b	3.17E-07	6.44E-07	1.38E-06	2.57E-06	2.56E-06
G. I. TRACT, LOWER LARGE INTESTINE WALL	6.48E-07 b	9.71E-07	1.84E-06	3.46E-06	4.10E-06	3.97E-06
KIDNEYS	3.02E-07 b	4.54E-07 b	6.05E-07	1.81E-06	3.26E-06	3.01E-06
LIVER	1.24E-07 b	1.87E-07	4.79E-07	1.67E-06	2.37E-06	2.55E-06
LUNGS (USED FOR RESPIRATORY LYMPH NODES)	1.69E-07 b	2.54E-07	1.04E-06	3.20E-06	4.42E-06	3.63E-06
'OTHER TISSUES' (USED FOR MUSCLE)	3.85E-07 c	9.43E-07 c	1.63E-06 c	3.06E-06 c	3.82E-06 c	3.66E-06 c
OVARIES	2.12E-08 b	3.18E-08 a	9.03E-07 a	3.85E-06 a	3.20E-06	2.81E-06
PANCREAS	3.91E-07 b	5.87E-07 b	7.83E-07 a	1.39E-06	3.22E-06	2.78E-06
SKELETON (USED FOR BONE AND TOTAL ENDOSTEAL CELLS)	9.34E-05	8.97E-05	8.42E-05	6.84E-05	4.10E-05	1.81E-05
RED MARROW	9.42E-05	8.85E-05	8.31E-05	6.45E-05	3.77E-05	1.65E-05
YELLOW MARROW	9.36E-05	8.93E-05	8.33E-05	6.55E-05	3.63E-05	1.53E-05
SKIN	4.95E-07	1.18E-06	1.85E-06	2.27E-06	2.40E-06	2.35E-06
SPLEEN	6.52E-07 b	9.78E-07 b	1.30E-06 b	1.96E-06	2.76E-06	2.09E-06
TESTES	1.81E-11 b	2.71E-11 a	2.22E-08 a	8.29E-07 a	1.73E-06	2.59E-06
THYMUS	2.85E-07 b	4.27E-07 b	5.69E-07 a	7.64E-07	1.87E-06	2.19E-06
THYROID	1.32E-07 b	1.98E-07 b	2.64E-07 a	1.94E-06 a	2.91E-06	2.76E-06
UTERUS	9.28E-11 b	1.39E-10 a	4.96E-08 a	1.23E-06	1.63E-06	2.11E-06
TOTAL BODY	1.43E-05	1.42E-05	1.40E-05	1.28E-05	9.31E-06	5.73E-06

TARGET	ENERGY (MEV) 0.200	0.500	1.000	1.500	2.000	4.000
ADRENALS	4.48E-06	5.85E-06	6.19E-06	6.45E-06	3.68E-06	3.90E-06
BLADDER WALL	1.68E-06	2.28E-06	1.37E-06	2.56E-06	1.87E-06	1.94E-06
G. I. TRACT, STOMACH WALL	2.07E-06	2.02E-06	1.76E-06	1.90E-06	1.72E-06	1.48E-06
G. I. TRACT, SMALL INTESTINE PLUS CONTENTS	2.73E-06	2.77E-06	2.79E-06	2.36E-06	2.35E-06	1.98E-06
G. I. TRACT, UPPER LARGE INTESTINE WALL	2.67E-06	2.40E-06	2.61E-06	2.33E-06	2.32E-06	1.77E-06
G. I. TRACT, LOWER LARGE INTESTINE WALL	3.82E-06	3.24E-06	3.58E-06	3.03E-06	2.72E-06	2.54E-06
KIDNEYS	3.29E-06	3.12E-06	4.02E-06	3.16E-06	2.43E-06	2.32E-06
LIVER	2.39E-06	2.44E-06	2.41E-06	2.30E-06	2.50E-06	2.05E-06
LUNGS (USED FOR RESPIRATORY LYMPH NODES)	3.50E-06	3.38E-06	3.29E-06	3.03E-06	3.09E-06	2.30E-06
'OTHER TISSUES' (USED FOR MUSCLE)	3.74E-06 c	3.82E-06 c	3.67E-06 c	3.54E-06 c	3.33E-06 c	2.83E-06 c
OVARIES	2.46E-06	3.75E-06	3.16E-06 a	2.79E-06 a	2.75E-06 a	2.22E-06 a
PANCREAS	3.90E-06	3.11E-06	3.29E-06	3.71E-06	3.50E-06	1.59E-06
SKELETON (USED FOR BONE AND TOTAL ENDOSTEAL CELLS)	1.29E-05	1.19E-05	1.11E-05	1.01E-05	9.39E-06	7.79E-06
RED MARROW	1.15E-05	1.06E-05	1.01E-05	9.19E-06	8.37E-06	7.06E-06
YELLOW MARROW	1.10E-05	1.03E-05	9.61E-06	8.67E-06	8.07E-06	6.72E-06
SKIN	2.63E-06	3.00E-06	2.87E-06	2.85E-06	2.62E-06	2.46E-06
SPLEEN	2.32E-06	2.90E-06	2.96E-06	2.02E-06	2.17E-06	1.23E-06
TESTES	2.23E-06	1.98E-06	2.24E-06	2.37E-06	3.88E-06	2.13E-06
THYMUS	1.65E-06	2.64E-06	2.84E-06	1.41E-06	2.17E-06 a	2.78E-06
THYROID	3.31E-06	3.86E-06	1.60E-06	3.82E-06	1.82E-07	1.91E-06 a
UTERUS	2.24E-06	1.97E-06	3.15E-06	1.98E-06	1.57E-06	1.65E-06
TOTAL BODY	5.01E-06	4.93E-06	4.70E-06	4.43E-06	4.16E-06	3.50E-06

a-BUILD UP FACTOR METHOD.
b-EXTRAPOLATED FROM HIGHER ENERGY.
c-CALCULATED BY DIFFERENCE.
d-ADJUSTMENT ON COMPOSITION OR DENSITY.

S P E C I F I C A B S O R B E D F R A C T I O N O F P H O T O N E N E R G Y

SOURCE IN RED MARROW

T A R G E T	E N E R G Y (MEV) 0.010	0.015	0.020	0.030	0.050	0.100
ADRENALS	5.89E-07 b	8.84E-07 a	6.62E-06 a	7.15E-06	7.38E-06	7.79E-06
BLADDER WALL	9.27E-11 b	1.39E-10 a	6.54E-08 a	1.62E-06	3.48E-06	4.43E-06
G. I. TRACT, STOMACH WALL	1.48E-07 b	2.22E-07 b	2.97E-07	1.26E-06	3.27E-06	3.32E-06
G. I. TRACT, SMALL INTESTINE PLUS CONTENTS	3.23E-07	7.96E-07	2.51E-06	6.49E-06	1.06E-05	1.02E-05
G. I. TRACT, UPPER LARGE INTESTINE WALL	6.77E-07 b	1.01E-06	2.40E-06	5.94E-06	8.38E-06	8.25E-06
G. I. TRACT, LOWER LARGE INTESTINE WALL	1.52E-06 b	2.28E-06	6.70E-06	1.32E-05	1.34E-05	1.14E-05
KIDNEYS	2.47E-07 b	3.71E-07	1.41E-06	5.06E-06	9.17E-06	8.55E-06
LIVER	8.65E-08 b	1.30E-07	5.78E-07	1.55E-06	3.11E-06	3.48E-06
LUNGS (USED FOR RESPIRATORY LYMPH NODES)	1.57E-07 b	2.36E-07	1.25E-06	3.67E-06	4.89E-06	4.44E-06
'OTHER TISSUES' (USED FOR MUSCLE)	5.26E-07 c	1.19E-06 c	2.18E-06 c	3.91E-06 c	4.77E-06 c	4.49E-06 c
OVARIES	8.59E-08 b	1.29E-07 a	3.43E-06 a	5.44E-06	1.70E-05	1.50E-05
PANCREAS	4.62E-08 b	6.93E-08 a	1.21E-07	2.16E-06	6.52E-06	6.84E-06
SKELETON (FOR BONE-c- AND TOTAL ENDOSTEAL CELLS)	9.28E-05	8.86E-05	8.13E-05	6.44E-05	3.76E-05	1.64E-05
RED MARROW	2.52E-04	2.38E-04	2.18E-04	1.69E-04	9.44E-05	3.93E-05
YELLOW MARROW	9.32E-05	8.80E-05	8.02E-05	6.17E-05	3.51E-05	1.51E-05
SKIN	4.94E-07	1.09E-06	1.45E-06	2.04E-06	2.05E-06	2.10E-06
SPLEEN	1.56E-07 b	2.34E-07 b	3.13E-07	1.50E-06	3.36E-06	3.62E-06
TESTES	2.50E-09 b	3.76E-09 b	5.01E-09 a	3.37E-07 a	9.48E-07	2.16E-06
THYMUS	2.52E-08 b	3.78E-08 a	6.02E-07 a	1.30E-06	2.75E-06	3.73E-06
THYROID	1.07E-07 b	1.60E-07 b	2.13E-07 a	9.31E-07	2.04E-06	2.55E-06
UTERUS	6.39E-10 b	9.58E-10 a	1.98E-07 a	3.07E-06	8.24E-06	8.38E-06
TOTAL BODY	1.43E-05	1.42E-05	1.40E-05	1.29E-05	9.78E-06	6.35E-06

T A R G E T	E N E R G Y (MEV) 0.200	0.500	1.000	1.500	2.000	4.000
ADRENALS	9.84E-06	5.85E-06	1.01E-05	6.53E-06	4.14E-06	8.40E-06
BLADDER WALL	2.75E-06	2.31E-06	3.80E-06	3.73E-06	1.97E-06	3.77E-06
G. I. TRACT, STOMACH WALL	3.99E-06	3.41E-06	3.99E-06	3.50E-06	2.68E-06	2.78E-06
G. I. TRACT, SMALL INTESTINE PLUS CONTENTS	9.25E-06	9.28E-06	8.40E-06	7.43E-06	7.29E-06	6.09E-06
G. I. TRACT, UPPER LARGE INTESTINE WALL	7.51E-06	7.13E-06	6.05E-06	5.81E-06	5.97E-06	5.54E-06
G. I. TRACT, LOWER LARGE INTESTINE WALL	1.03E-05	1.06E-05	9.63E-06	8.54E-06	1.01E-05	5.76E-06
KIDNEYS	7.98E-06	8.18E-06	7.68E-06	8.08E-06	7.86E-06	5.64E-06
LIVER	3.51E-06	3.52E-06	3.27E-06	3.35E-06	3.14E-06	2.60E-06
LUNGS (USED FOR RESPIRATORY LYMPH NODES)	4.34E-06	4.14E-06	3.99E-06	4.01E-06	3.46E-06	2.88E-06
'OTHER TISSUES' (USED FOR MUSCLE)	4.47E-06 c	4.51E-06 c	4.30E-06 c	4.08E-06 c	3.85E-06 c	3.22E-06 c
OVARIES	7.84E-06	1.25E-05	8.41E-06	1.14E-05	9.04E-06	6.73E-06 a
PANCREAS	5.76E-06	5.94E-06	3.67E-06	3.94E-06	4.06E-06	3.26E-06
SKELETON (FOR BONE-c- AND TOTAL ENDOSTEAL CELLS)	1.15E-05	1.08E-05	9.85E-06	9.11E-06	8.62E-06	7.00E-06
RED MARROW	2.73E-05	2.56E-05	2.32E-05	2.14E-05	2.01E-05	1.63E-05
YELLOW MARROW	1.05E-05	9.85E-06	9.08E-06	8.36E-06	7.92E-06	6.48E-06
SKIN	2.42E-06	2.59E-06	2.50E-06	2.52E-06	2.42E-06	1.92E-06
SPLEEN	3.31E-06	2.76E-06	3.58E-06	2.92E-06	3.34E-06	2.92E-06
TESTES	1.07E-06	1.49E-06	1.46E-06	5.20E-07	1.67E-06	1.38E-06 a
THYMUS	2.71E-06	1.53E-06	2.26E-06	3.26E-06	2.79E-06	4.25E-06
THYROID	2.60E-06	3.12E-06	3.20E-06	2.08E-06	2.71E-06 a	2.26E-06 a
UTERUS	8.28E-06	6.59E-06	5.16E-06	5.50E-06	3.34E-06	4.11E-06
TOTAL BODY	5.58E-06	5.49E-06	5.18E-06	4.88E-06	4.62E-06	3.82E-06

a-BUILD UP FACTOR METHOD.
b-EXTRAPOLATED FROM HIGHER ENERGY.
c-CALCULATED BY DIFFERENCE.
d-ADJUSTMENT ON COMPOSITION OR DENSITY.

SPECIFIC ABSORBED FRACTION OF PHOTON ENERGY

SOURCE IN YELLOW MARROW

TARGET	ENERGY (MEV) 0.010	0.015	0.020	0.030	0.050	0.100
ADRENALS	1.58E-07 b	2.37E-07 a	1.40E-06 a	3.69E-06	2.84E-06	3.87E-06
BLADDER WALL	1.82E-11 b	2.72E-11 a	1.86E-08 a	6.99E-07 a	9.03E-07	1.63E-06
G. I. TRACT, STOMACH WALL	2.76E-07 b	4.14E-07 b	5.53E-07 a	1.85E-06	2.92E-06	3.28E-06
G. I. TRACT, SMALL INTESTINE PLUS CONTENTS	1.63E-07 b	4.74E-07	7.18E-07	2.61E-06	3.98E-06	4.16E-06
G. I. TRACT, UPPER LARGE INTESTINE WALL	2.08E-07 b	3.11E-07	6.83E-07	2.01E-06	3.29E-06	3.53E-06
G. I. TRACT, LOWER LARGE INTESTINE WALL	4.58E-07 b	6.86E-07	1.43E-06	3.43E-06	3.64E-06	3.57E-06
KIDNEYS	4.69E-07 b	7.03E-07 b	9.37E-07	2.57E-06	3.81E-06	4.14E-06
LIVER	1.73E-07 b	2.59E-07	9.30E-07	3.04E-06	3.90E-06	3.89E-06
LUNGS (USED FOR RESPIRATORY LYMPH NODES)	1.38E-07 b	2.06E-07	1.32E-06	4.20E-06	4.76E-06	3.72E-06
'OTHER TISSUES' (USED FOR MUSCLE)	1.10E-06 c	1.53E-06 c	2.28E-06 c	3.39E-06 c	3.66E-06 c	3.24E-06 c
OVARIES	2.33E-08 b	3.49E-08 a	1.02E-06 a	1.44E-06	4.04E-06	6.46E-06
PANCREAS	1.12E-07 b	1.68E-07 b	2.24E-07	1.44E-06	3.24E-06	4.03E-06
SKELETON (FOR BONE-c- AND TOTAL ENDOSTEAL CELLS)	9.01E-05	8.67E-05	8.02E-05	6.30E-05	3.51E-05	1.45E-05
RED MARROW	8.37E-05	7.98E-05	7.29E-05	5.55E-05	3.22E-05	1.39E-05
YELLOW MARROW	1.55E-04	1.48E-04	1.37E-04	1.06E-04	5.62E-05	2.20E-05
SKIN	7.50E-07	1.57E-06	2.53E-06	3.08E-06	2.86E-06	2.67E-06
SPLEEN	1.98E-07 b	2.97E-07 b	3.95E-07	2.44E-06	4.41E-06	4.07E-06
TESTES	2.64E-11 b	3.96E-11 a	3.00E-08 a	1.18E-06 a	3.93E-06 a	4.33E-06 a
THYMUS	3.28E-08 b	4.93E-08 a	6.59E-07 a	2.61E-06	2.48E-06	2.84E-06
THYROID	1.06E-07 b	1.59E-07 b	2.12E-07 a	2.18E-06 a	4.77E-06 a	4.88E-06 a
UTERUS	1.64E-10 b	2.45E-10 a	5.98E-08 a	1.15E-06	2.67E-06	2.73E-06
TOTAL BODY	1.43E-05	1.42E-05	1.38E-05	1.22E-05	8.32E-06	4.92E-06

TARGET	ENERGY (MEV) 0.200	0.500	1.000	1.500	2.000	4.000
ADRENALS	5.24E-06	3.71E-06	1.64E-06	4.23E-06	3.15E-06	3.23E-06
BLADDER WALL	1.34E-06	8.83E-07	1.06E-06	1.42E-06	1.29E-06	1.80E-06
G. I. TRACT, STOMACH WALL	2.63E-06	2.56E-06	2.53E-06	2.23E-06	2.36E-06	2.37E-06
G. I. TRACT, SMALL INTESTINE PLUS CONTENTS	3.80E-06	3.64E-06	3.32E-06	3.22E-06	3.02E-06	2.81E-06
G. I. TRACT, UPPER LARGE INTESTINE WALL	3.44E-06	2.95E-06	2.81E-06	3.26E-06	2.77E-06	2.26E-06
G. I. TRACT, LOWER LARGE INTESTINE WALL	3.25E-06	2.84E-06	2.63E-06	3.19E-06	3.01E-06	2.06E-06
KIDNEYS	3.91E-06	4.20E-06	3.85E-06	3.60E-06	3.12E-06	2.82E-06
LIVER	3.52E-06	3.77E-06	3.65E-06	3.51E-06	3.33E-06	2.64E-06
LUNGS (USED FOR RESPIRATORY LYMPH NODES)	3.47E-06	3.44E-06	3.39E-06	3.33E-06	2.73E-06	2.56E-06
'OTHER TISSUES' (USED FOR MUSCLE)	3.32E-06 c	3.56E-06 c	3.39E-06 c	3.22E-06 c	3.05E-06 c	2.57E-06 c
OVARIES	5.06E-06	2.90E-06	3.09E-06 a	2.97E-06 a	2.75E-06 a	2.29E-06 a
PANCREAS	4.75E-06	4.55E-06	3.27E-06	3.39E-06	2.88E-06	1.12E-06
SKELETON (FOR BONE-c- AND TOTAL ENDOSTEAL CELLS)	1.02E-05	9.79E-06	9.09E-06	8.42E-06	7.84E-06	6.53E-06
RED MARROW	9.53E-06	9.21E-06	8.49E-06	7.75E-06	7.13E-06	5.92E-06
YELLOW MARROW	1.57E-05	1.50E-05	1.39E-05	1.30E-05	1.22E-05	9.93E-06
SKIN	2.90E-06	3.36E-06	3.18E-06	2.93E-06	2.99E-06	2.50E-06
SPLEEN	3.80E-06	3.36E-06	3.73E-06	3.98E-06	3.84E-06	3.02E-06
TESTES	3.88E-06 a	3.35E-06 a	3.02E-06 a	2.74E-06 a	2.59E-06 a	2.15E-06 a
THYMUS	2.67E-06	1.26E-06	1.42E-06	2.59E-06	2.22E-06	3.21E-06
THYROID	4.39E-06 a	1.51E-06	1.74E-06	2.30E-06	2.95E-06 a	2.48E-06 a
UTERUS	2.25E-06	2.30E-06	2.27E-06	1.27E-06	3.05E-06	2.76E-06
TOTAL BODY	4.32E-06	4.43E-06	4.19E-06	3.95E-06	3.72E-06	3.13E-06

a-BUILD UP FACTOR METHOD.
b-EXTRAPOLATED FROM HIGHER ENERGY.
c-CALCULATED BY DIFFERENCE.
d-ADJUSTMENT ON COMPOSITION OR DENSITY.

SPECIFIC ABSORBED FRACTION OF PHOTON ENERGY

SOURCE IN SKIN

TARGET	ENERGY (MEV) 0.010	0.015	0.020	0.030	0.050	0.100
ADRENALS	1.05E-07 b	1.57E-07 a	1.37E-06 a	2.37E-06	2.12E-06	2.23E-06
BLADDER WALL	2.14E-07 b	3.20E-07 b	4.27E-07	1.91E-06	1.94E-06	1.79E-06
G. I. TRACT, STOMACH WALL	2.74E-07 b	4.11E-07 b	5.48E-07	2.02E-06	2.58E-06	2.06E-06
G. I. TRACT, SMALL INTESTINE PLUS CONTENTS	6.45E-08 b	9.68E-08 b	1.29E-07	8.64E-07	1.72E-06	1.69E-06
G. I. TRACT, UPPER LARGE INTESTINE WALL	1.26E-07 b	1.89E-07 b	2.52E-07	1.19E-06	1.95E-06	1.83E-06
G. I. TRACT, LOWER LARGE INTESTINE WALL	5.72E-08 b	8.59E-08 b	1.14E-07	9.04E-07	1.65E-06	1.84E-06
KIDNEYS	1.82E-07 b	2.72E-07	1.18E-06	2.81E-06	2.91E-06	2.08E-06
LIVER	4.77E-08 b	7.15E-08	4.86E-07	1.78E-06	2.32E-06	2.01E-06
LUNGS (USED FOR RESPIRATORY LYMPH NODES)	8.04E-08 b	1.21E-07	7.45E-07	2.54E-06	2.94E-06	2.17E-06
'OTHER TISSUES' (USED FOR MUSCLE)	4.00E-06 c	6.06E-06 c	6.46E-06 c	5.41E-06 c	3.48E-06 c	2.60E-06 c
OVARIES	8.61E-12 b	1.29E-11 a	1.93E-08 a	7.68E-07 a	1.86E-06	1.22E-06
PANCREAS	1.41E-08 b	2.12E-08 b	2.83E-08 a	9.03E-07	1.45E-06	1.39E-06
SKELETON (USED FOR BONE AND TOTAL ENDOSTEAL CELLS)	1.85E-06	4.30E-06	6.58E-06	8.80E-06	8.06E-06	4.19E-06
RED MARROW	1.61E-06	3.90E-06	5.97E-06	7.98E-06	7.39E-06	4.02E-06
YELLOW MARROW	2.18E-06	5.27E-06	8.21E-06	1.09E-05	9.11E-06	4.38E-06
SKIN	2.05E-04	1.03E-04	5.57E-05	2.24E-05	8.07E-06	5.33E-06
SPLEEN	1.67E-07 b	2.50E-07 b	3.34E-07	1.57E-06	2.49E-06	2.03E-06
TESTES	8.27E-07	5.82E-06	8.59E-06	9.45E-06	4.85E-06	3.04E-06
THYMUS	1.88E-08 b	2.82E-08 a	5.47E-07	1.56E-06	2.27E-06	2.22E-06
THYROID	1.25E-06 b	1.88E-06 b	2.50E-06	5.24E-06	3.33E-06	2.50E-06
UTERUS	5.17E-08 b	7.75E-08 b	1.03E-07	6.49E-07	1.84E-06	1.61E-06
TOTAL BODY	1.13E-05	9.06E-06	7.77E-06	6.17E-06	4.21E-06	2.87E-06

TARGET	ENERGY (MEV) 0.200	0.500	1.000	1.500	2.000	4.000
ADRENALS	3.04E-06	2.26E-06	2.79E-06	2.82E-06	2.77E-06	2.85E-06
BLADDER WALL	1.91E-06	2.16E-06	2.65E-06	2.69E-06	2.28E-06	1.50E-06
G. I. TRACT, STOMACH WALL	1.97E-06	2.24E-06	2.23E-06	2.04E-06	1.94E-06	1.61E-06
G. I. TRACT, SMALL INTESTINE PLUS CONTENTS	1.73E-06	1.90E-06	2.01E-06	1.93E-06	1.80E-06	1.56E-06
G. I. TRACT, UPPER LARGE INTESTINE WALL	1.66E-06	2.00E-06	2.25E-06	1.78E-06	1.86E-06	1.44E-06
G. I. TRACT, LOWER LARGE INTESTINE WALL	1.78E-06	2.08E-06	2.25E-06	1.91E-06	2.08E-06	1.45E-06
KIDNEYS	2.29E-06	2.59E-06	2.60E-06	2.38E-06	2.30E-06	1.98E-06
LIVER	2.02E-06	2.34E-06	2.25E-06	2.20E-06	2.21E-06	1.73E-06
LUNGS (USED FOR RESPIRATORY LYMPH NODES)	2.27E-06	2.34E-06	2.37E-06	2.33E-06	2.23E-06	1.84E-06
'OTHER TISSUES' (USED FOR MUSCLE)	2.74E-06 c	3.14E-06 c	3.15E-06 c	2.96E-06 c	2.81E-06 c	2.37E-06 c
OVARIES	1.77E-06	1.02E-06	2.11E-06	1.75E-06	2.10E-06	1.22E-06
PANCREAS	2.07E-06	2.02E-06	1.63E-06	1.78E-06	1.87E-06	1.35E-06
SKELETON (USED FOR BONE AND TOTAL ENDOSTEAL CELLS)	2.99E-06	2.93E-06	2.85E-06	2.74E-06	2.51E-06	2.18E-06
RED MARROW	2.85E-06	2.72E-06	2.63E-06	2.59E-06	2.32E-06	2.06E-06
YELLOW MARROW	3.11E-06	3.10E-06	3.01E-06	2.92E-06	2.66E-06	2.34E-06
SKIN	6.05E-06	6.93E-06	6.93E-06	6.38E-06	6.01E-06	4.78E-06
SPLEEN	2.06E-06	2.27E-06	2.67E-06	1.87E-06	1.82E-06	1.76E-06
TESTES	3.82E-06	2.86E-06	3.10E-06	3.06E-06	2.97E-06	3.20E-06
THYMUS	2.49E-06	2.99E-06	2.43E-06	1.94E-06	2.72E-06	2.13E-06
THYROID	2.73E-06	2.89E-06	2.40E-06	2.31E-06	2.82E-06	2.18E-06
UTERUS	1.39E-06	1.96E-06	2.58E-06	2.11E-06	1.74E-06	2.19E-06
TOTAL BODY	2.81E-06	3.15E-06	3.15E-06	2.97E-06	2.81E-06	2.35E-06

a-BUILD UP FACTOR METHOD.
b-EXTRAPOLATED FROM HIGHER ENERGY.
c-CALCULATED BY DIFFERENCE.
d-ADJUSTMENT ON COMPOSITION OR DENSITY.

S P E C I F I C A B S O R B E D F R A C T I O N O F P H O T O N E N E R G Y

SOURCE IN SPLEEN

T A R G E T	E N E R G Y (MEV) 0.010	0.015	0.020	0.030	0.050	0.100
ADRENALS	1.11E-07 b	1.66E-07 a	9.76E-06	3.35E-05	3.43E-05	2.40E-05
BLADDER WALL	6.70E-22 b	1.00E-21 a	2.23E-13 a	5.34E-09 a	2.28E-07 a	3.15E-07
G. I. TRACT, STOMACH WALL	8.63E-07 b	1.29E-06	1.34E-05	5.33E-05	5.86E-05	4.09E-05
G. I. TRACT, SMALL INTESTINE PLUS CONTENTS	1.77E-10 b	2.65E-10 a	9.39E-08	1.49E-06	5.08E-06	5.60E-06
G. I. TRACT, UPPER LARGE INTESTINE WALL	1.18E-10 b	1.77E-10 a	6.70E-08 a	2.18E-06	5.92E-06	6.20E-06
G. I. TRACT, LOWER LARGE INTESTINE WALL	1.82E-12 b	2.73E-12 a	5.78E-09 a	4.55E-07	2.01E-06	2.35E-06
KIDNEYS	7.02E-06 b	1.05E-05	3.63E-05	6.65E-05	5.30E-05	3.61E-05
LIVER	7.20E-13 b	1.08E-12 a	4.25E-09 a	5.99E-07	2.93E-06	3.78E-06
LUNGS (USED FOR RESPIRATORY LYMPH NODES)	6.50E-07 b	9.76E-07	4.97E-06	1.25E-05	1.23E-05	8.97E-06
'OTHER TISSUES' (USED FOR MUSCLE)	1.18E-06 c	3.78E-06 c	6.79E-06 c	9.42E-06 c	7.63E-06 c	5.48E-06 c
OVARIES	9.82E-17 b	1.47E-16 a	7.94E-11 a	8.80E-08 a	1.19E-06 a	1.14E-06
PANCREAS	1.56E-06	4.29E-05	1.26E-04	1.87E-04	1.23E-04	7.35E-05
SKELETON (USED FOR BONE AND TOTAL ENDOSTEAL CELLS)	6.83E-09	2.92E-07	1.70E-06	5.79E-06	8.30E-06	5.06E-06
RED MARROW	7.07E-09	3.02E-07	1.74E-06	6.07E-06	1.05E-05	7.47E-06
YELLOW MARROW	9.29E-09	3.97E-07	2.38E-06	8.95E-06	1.30E-05	7.67E-06
SKIN	7.80E-09 b	1.17E-08	3.10E-07	1.54E-06	1.98E-06	1.74E-06
SPLEEN	5.44E-03	4.66E-03	3.59E-03	1.86E-03	7.24E-04	4.21E-04
TESTES	1.22E-29 b	1.83E-29 a	4.62E-17 a	9.74E-11 a	2.09E-08 a	1.42E-07 a
THYMUS	5.50E-20 b	8.25E-20 a	2.18E-12 a	1.83E-08 a	2.51E-07	9.39E-07
THYROID	6.30E-27 b	9.45E-27 a	9.31E-16 a	4.27E-10 a	5.15E-08 a	2.70E-07 a
UTERUS	7.54E-19 b	1.13E-18 a	9.33E-12 a	4.07E-08 a	6.87E-07	1.61E-06
TOTAL BODY	1.43E-05	1.43E-05	1.42E-05	1.30E-05	9.47E-06	6.52E-06

T A R G E T	E N E R G Y (MEV) 0.200	0.500	1.000	1.500	2.000	4.000
ADRENALS	2.32E-05	2.07E-05	2.35E-05	1.95E-05	1.83E-05	1.34E-05
BLADDER WALL	6.27E-07	4.52E-07	1.25E-06	8.91E-07	9.65E-07	9.26E-07 a
G. I. TRACT, STOMACH WALL	3.36E-05	3.39E-05	2.93E-05	3.14E-05	2.65E-05	2.06E-05
G. I. TRACT, SMALL INTESTINE PLUS CONTENTS	5.08E-06	4.77E-06	4.57E-06	4.67E-06	4.10E-06	3.55E-06
G. I. TRACT, UPPER LARGE INTESTINE WALL	4.36E-06	4.81E-06	4.58E-06	4.63E-06	4.65E-06	3.03E-06
G. I. TRACT, LOWER LARGE INTESTINE WALL	2.27E-06	2.41E-06	2.06E-06	2.11E-06	2.22E-06	1.81E-06
KIDNEYS	3.14E-05	2.93E-05	2.59E-05	2.55E-05	2.33E-05	1.79E-05
LIVER	3.67E-06	3.69E-06	3.53E-06	3.45E-06	3.27E-06	2.82E-06
LUNGS (USED FOR RESPIRATORY LYMPH NODES)	7.91E-06	7.56E-06	6.87E-06	6.21E-06	6.38E-06	5.23E-06
'OTHER TISSUES' (USED FOR MUSCLE)	5.14E-06 c	5.07E-06 c	4.79E-06 c	4.55E-06 c	4.23E-06 c	3.60E-06 c
OVARIES	2.05E-06	3.70E-06	1.70E-06	2.17E-06 a	3.46E-07	9.91E-08
PANCREAS	6.58E-05	6.70E-05	5.80E-05	5.13E-05	4.94E-05	3.75E-05
SKELETON (USED FOR BONE AND TOTAL ENDOSTEAL CELLS)	3.25E-06	2.65E-06	2.48E-06	2.36E-06	2.18E-06	1.94E-06
RED MARROW	5.04E-06	3.90E-06	3.64E-06	3.35E-06	3.19E-06	2.82E-06
YELLOW MARROW	4.77E-06	3.99E-06	3.68E-06	3.48E-06	3.18E-06	2.89E-06
SKIN	1.81E-06	2.18E-06	2.16E-06	2.05E-06	1.80E-06	1.66E-06
SPLEEN	4.32E-04	4.49E-04	4.10E-04	3.77E-04	3.55E-04	2.73E-04
TESTES	2.45E-07	3.30E-07	3.88E-07	4.14E-07	4.26E-07	4.17E-07
THYMUS	1.33E-06 a	1.65E-06 a	2.42E-06 a	4.14E-07 a	2.24E-06 a	1.27E-06 a
THYROID	4.16E-07	5.10E-07	5.68E-07	5.83E-07	5.88E-07	5.58E-07 a
UTERUS	1.42E-06 a	1.61E-06 a	2.11E-06 a	6.25E-07 a	1.76E-06 a	2.23E-06 a
TOTAL BODY	5.93E-06	5.82E-06	5.46E-06	5.16E-06	4.81E-06	4.02E-06

a-BUILD UP FACTOR METHOD.
b-EXTRAPOLATED FROM HIGHER ENERGY.
c-CALCULATED BY DIFFERENCE.
d-ADJUSTMENT ON COMPOSITION OR DENSITY.

SPECIFIC ABSORBED FRACTION OF PHOTON ENERGY

SOURCE IN TESTES

TARGET	ENERGY (MEV) 0.010	0.015	0.020	0.030	0.050	0.100
ADRENALS	7.09E-33 b	1.06E-32 a	2.08E-18 a	2.80E-11 a	1.06E-08 a	8.90E-08 a
BLADDER WALL	5.00E-09 b	7.50E-09 a	2.26E-06	1.74E-05	2.51E-05	1.89E-05
G. I. TRACT, STOMACH WALL	1.39E-25 b	2.08E-25 a	3.73E-15 a	6.66E-10 a	6.18E-08	8.57E-08
G. I. TRACT, SMALL INTESTINE PLUS CONTENTS	2.67E-18 b	4.01E-18 a	1.62E-11 a	4.66E-08	8.04E-07	1.25E-06
G. I. TRACT, UPPER LARGE INTESTINE WALL	1.35E-17 b	2.03E-17 a	2.75E-11 a	4.78E-08 a	6.70E-07	1.06E-06
G. I. TRACT, LOWER LARGE INTESTINE WALL	1.30E-09 b	1.95E-09 a	7.90E-07	6.85E-06	1.31E-05	1.06E-05
KIDNEYS	4.67E-27 b	7.01E-27 a	9.01E-16 a	4.33E-10 a	3.81E-08	1.16E-07
LIVER	2.58E-26 b	3.87E-26 a	9.61E-16 a	2.74E-10 a	2.73E-08	9.67E-08
LUNGS (USED FOR RESPIRATORY LYMPH NODES)	2.24E-36 b	3.36E-36 a	1.83E-20 a	1.65E-12 a	1.49E-09 a	1.23E-08
'OTHER TISSUES' (USED FOR MUSCLE)	4.99E-08 c	7.21E-07 c	2.66E-06 c	5.71E-06 c	5.52E-06 c	4.28E-06 c
PANCREAS	9.64E-30 b	1.45E-29 a	4.97E-17 a	1.17E-10 a	2.49E-08 a	1.63E-07 a
SKELETON (USED FOR BONE AND TOTAL ENDOSTEAL CELLS)	7.33E-11	1.10E-10	2.40E-08	1.15E-06	4.36E-06	4.01E-06
RED MARROW	3.24E-09 b	4.86E-09 b	6.49E-09	6.46E-07	3.22E-06	3.12E-06
YELLOW MARROW	1.11E-09 b	1.67E-09 b	2.23E-09	2.51E-07	1.35E-06	1.42E-06
SKIN	1.47E-06	9.12E-06	1.53E-05	1.39E-05	7.51E-06	4.93E-06
SPLEEN	1.31E-29 b	1.97E-29 a	4.57E-17 a	9.84E-11 a	2.10E-08 a	6.08E-08
TESTES	2.43E-02	1.86E-02	1.23E-02	5.34E-03	1.77E-03	1.07E-03
THYMUS	2.20E-24 b	3.30E-24 b	4.40E-24 a	5.01E-14 a	2.17E-10 a	5.16E-09 a
THYROID	2.50E-28 b	3.75E-28 b	5.00E-28 a	7.32E-16 a	1.68E-11 a	7.89E-10 a
TOTAL BODY	1.43E-05	1.38E-05	1.26E-05	1.00E-05	6.84E-06	5.03E-06

TARGET	ENERGY (MEV) 0.200	0.500	1.000	1.500	2.000	4.000
ADRENALS	1.67E-07 a	2.44E-07 a	3.02E-07 a	3.28E-07 a	3.43E-07 a	3.44E-07 a
BLADDER WALL	1.70E-05	1.75E-05	1.74E-05	1.38E-05	1.35E-05	9.58E-06
G. I. TRACT, STOMACH WALL	1.71E-07	4.07E-07	2.71E-07	4.06E-07	4.80E-07	4.52E-07
G. I. TRACT, SMALL INTESTINE PLUS CONTENTS	1.50E-06	1.85E-06	1.78E-06	1.78E-06	1.86E-06	1.58E-06
G. I. TRACT, UPPER LARGE INTESTINE WALL	1.33E-06	1.10E-06	1.40E-06	1.16E-06	2.30E-06	1.42E-06
G. I. TRACT, LOWER LARGE INTESTINE WALL	9.91E-06	9.83E-06	7.24E-06	7.98E-06	7.32E-06	7.40E-06
KIDNEYS	2.04E-07	3.51E-07	5.07E-07	5.63E-07	4.05E-07	7.27E-07
LIVER	1.48E-07	1.77E-07	3.61E-07	4.16E-07	4.07E-07	3.97E-07
LUNGS (USED FOR RESPIRATORY LYMPH NODES)	4.38E-08	4.94E-08	1.01E-07	1.60E-07	1.20E-07	1.68E-07
'OTHER TISSUES' (USED FOR MUSCLE)	4.14E-06 c	4.27E-06 c	4.08E-06 c	3.97E-06 c	4.59E-06 c	3.20E-06 c
PANCREAS	2.76E-07 a	1.28E-07	3.61E-07	4.50E-07 a	6.34E-07	4.48E-07 a
SKELETON (USED FOR BONE AND TOTAL ENDOSTEAL CELLS)	2.73E-06	2.28E-06	2.15E-06	2.00E-06	1.95E-06	1.71E-06
RED MARROW	2.25E-06	1.81E-06	1.69E-06	1.51E-06	1.61E-06	1.41E-06
YELLOW MARROW	1.07E-06	9.80E-07	9.40E-07	9.18E-07	1.02E-06	8.84E-07
SKIN	5.13E-06	5.48E-06	5.15E-06	5.11E-06	4.59E-06	3.93E-06
SPLEEN	7.38E-08	4.55E-07	2.12E-07	2.38E-07	5.73E-07	2.33E-07
TESTES	1.17E-03	1.23E-03	1.16E-03	1.04E-03	9.82E-04	7.66E-04
THYMUS	1.62E-08 a	3.82E-08 a	6.43E-08 a	8.18E-08 a	9.46E-08 a	1.14E-07 a
THYROID	3.53E-09 a	1.17E-08 a	2.46E-08 a	3.51E-08 a	4.35E-08 a	6.00E-08 a
TOTAL BODY	4.82E-06	4.91E-06	4.69E-06	4.47E-06	4.23E-06	3.54E-06

a-BUILD UP FACTOR METHOD.
b-EXTRAPOLATED FROM HIGHER ENERGY.
c-CALCULATED BY DIFFERENCE.
d-ADJUSTMENT ON COMPOSITION OR DENSITY

SPECIFIC ABSORBED FRACTION OF PHOTON ENERGY

SOURCE IN THYROID

TARGET	ENERGY (MEV) 0.010	0.015	0.020	0.030	0.050	0.100
ADRENALS	2.12E-27 b	3.18E-26 a	2.74E-15 a	9.08E-10 a	8.81E-08 a	4.04E-07 a
BLADDER WALL	8.78E-25 b	1.32E-24 b	1.76E-24 a	3.15E-14 a	1.61E-10 a	4.12E-09 a
G. I. TRACT, STOMACH WALL	2.07E-25 b	3.11E-25 a	4.50E-15 a	7.26E-10 a	2.01E-07	1.90E-07
G. I. TRACT, SMALL INTESTINE PLUS CONTENTS	4.58E-35 b	6.87E-35 a	1.08E-19 a	5.26E-12 a	3.49E-09 a	1.97E-08
G. I. TRACT, UPPER LARGE INTESTINE WALL	9.33E-35 b	1.40E-34 a	1.88E-19 a	7.08E-12 a	4.20E-09 a	4.35E-08 a
G. I. TRACT, LOWER LARGE INTESTINE WALL	8.33E-38 b	1.25E-37 a	2.75E-21 a	5.66E-13 a	6.64E-10 a	1.00E-08 a
KIDNEYS	8.87E-30 b	1.33E-29 a	3.98E-17 a	9.31E-11 a	2.06E-08 a	1.20E-07
LIVER	1.26E-24 b	1.90E-24 a	1.16E-14 a	1.19E-09 a	1.93E-07	3.05E-07
LUNGS (USED FOR RESPIRATORY LYMPH NODES)	1.52E-13 b	2.28E-12 a	3.30E-08	1.23E-06	3.89E-06	3.67E-06
'OTHER TISSUES' (USED FOR MUSCLE)	3.35E-06 c	8.66E-06 c	1.19E-05 c	1.16E-05 c	7.22E-06 c	4.81E-06 c
OVARIES	2.33E-23 b	3.50E-23 b	4.66E-23 a	2.50E-13 a	5.97E-10 a	1.09E-08 a
PANCREAS	1.24E-26 b	1.86E-26 a	2.08E-15 a	7.80E-10 a	7.98E-08 a	1.91E-07
SKELETON (USED FOR BONE AND TOTAL ENDOSTEAL CELLS)	1.79E-09	2.69E-09	2.84E-07	2.99E-06	6.35E-06	4.45E-06
RED MARROW	2.68E-09 b	4.02E-09	3.14E-07	2.74E-06	6.46E-06	4.87E-06
YELLOW MARROW	1.12E-09 b	1.68E-09	1.66E-07	1.47E-06	3.13E-06	2.27E-06
SKIN	5.06E-07 b	7.59E-07	3.26E-06	5.35E-06	3.66E-06	2.64E-06
SPLEEN	6.81E-27 b	1.02E-26 a	9.64E-16 a	4.29E-10 a	1.16E-07	3.75E-07
TESTES	2.48E-28 b	3.72E-28 b	4.96E-28 a	7.32E-16 a	1.67E-11 a	7.87E-10 a
THYMUS	1.23E-09 b	1.84E-09 a	2.53E-07	1.13E-05	2.28E-05	1.65E-05
THYROID	4.29E-02	2.93E-02	1.81E-02	7.41E-03	2.42E-03	1.44E-03
UTERUS	5.98E-24 b	8.97E-24 b	1.20E-23 a	2.03E-13 a	5.28E-10 a	9.99E-09 a
TOTAL BODY	1.43E-05	1.42E-05	1.35E-05	1.08E-05	6.95E-06	4.71E-06

TARGET	ENERGY (MEV) 0.200	0.500	1.000	1.500	2.000	4.000
ADRENALS	5.85E-07 a	6.83E-07 a	7.34E-07 a	7.40E-07 a	7.39E-07 a	6.85E-07 a
BLADDER WALL	1.35E-08 a	3.30E-08 a	5.71E-08 a	7.36E-08 a	8.56E-08 a	1.05E-07 a
G. I. TRACT, STOMACH WALL	1.45E-07	4.44E-07	4.62E-07	6.42E-07	3.70E-07	5.20E-07
G. I. TRACT, SMALL INTESTINE PLUS CONTENTS	5.80E-08	2.47E-08	1.38E-07	1.91E-07	1.92E-07	2.04E-07
G. I. TRACT, UPPER LARGE INTESTINE WALL	4.03E-08	3.63E-08	1.51E-07	2.29E-07	1.85E-07	3.92E-07
G. I. TRACT, LOWER LARGE INTESTINE WALL	2.59E-08 a	5.22E-08 a	8.09E-08 a	9.91E-08 a	1.11E-07 a	1.30E-07 a
KIDNEYS	1.40E-07	1.69E-07	4.12E-07	5.96E-07	4.35E-07	3.09E-07
LIVER	4.28E-07	5.49E-07	6.54E-07	7.28E-07	8.78E-07	7.72E-07
LUNGS (USED FOR RESPIRATORY LYMPH NODES)	3.38E-06	3.67E-06	3.83E-06	3.35E-06	3.17E-06	3.22E-06
'OTHER TISSUES' (USED FOR MUSCLE)	4.63E-06 c	4.76E-06 c	4.45E-06 c	4.19E-06 c	3.94E-06 c	3.27E-06 c
OVARIES	3.00E-08 a	6.21E-08 a	9.62E-08 a	1.17E-07 a	1.31E-07 a	1.51E-07 a
PANCREAS	3.98E-07	2.34E-07	1.88E-07	1.49E-06	7.11E-07	6.61E-07
SKELETON (USED FOR BONE AND TOTAL ENDOSTEAL CELLS)	2.98E-06	2.61E-06	2.39E-06	2.33E-06	2.23E-06	1.97E-06
RED MARROW	3.27E-06	2.89E-06	2.57E-06	2.56E-06	2.47E-06	2.11E-06
YELLOW MARROW	1.55E-06	1.38E-06	1.29E-06	1.32E-06	1.29E-06	1.12E-06
SKIN	2.87E-06	2.97E-06	3.07E-06	2.96E-06	2.76E-06	2.41E-06
SPLEEN	4.36E-07	4.40E-07	7.21E-07	6.30E-07	4.40E-07	6.85E-07
TESTES	3.52E-09 a	1.17E-08 a	2.46E-08 a	3.51E-08 a	4.36E-08 a	6.00E-08 a
THYMUS	1.52E-05	1.52E-05	1.23E-05	1.32E-05	1.46E-05	9.37E-06
THYROID	1.55E-03	1.66E-03	1.54E-03	1.45E-03	1.31E-03	1.05E-03
UTERUS	2.80E-08 a	5.89E-08 a	9.19E-08 a	1.12E-07 a	1.27E-07 a	1.46E-07 a
TOTAL BODY	4.42E-06	4.50E-06	4.26E-06	4.03E-06	3.78E-06	3.18E-06

a-BUILD UP FACTOR METHOD.
b-EXTRAPOLATED FROM HIGHER ENERGY.
c-CALCULATED BY DIFFERENCE.
d-ADJUSTMENT ON COMPOSITION OR DENSITY.

SPECIFIC ABSORBED FRACTION OF PHOTON ENERGY

SOURCE IN TOTAL BODY

TARGET	ENERGY (MEV) 0.010	0.015	0.020	0.030	0.050	0.100
ADRENALS	1.65E-05	1.70E-05	8.46E-06	1.03E-05	5.35E-06	6.41E-06
BLADDER WALL	1.16E-05	1.43E-05	1.84E-05	1.09E-05	1.04E-05	6.41E-06
G. I. TRACT, STOMACH WALL	1.38E-05	1.41E-05	1.46E-05	1.14E-05	8.61E-06	5.76E-06
G. I. TRACT, SMALL INTESTINE PLUS CONTENTS	1.44E-05	1.45E-05	1.39E-05	1.34E-05	9.92E-06	7.56E-06
G. I. TRACT, UPPER LARGE INTESTINE WALL	1.47E-05	1.51E-05	1.34E-05	1.36E-05	9.72E-06	7.39E-06
G. I. TRACT, LOWER LARGE INTESTINE WALL	1.46E-05	1.21E-05	1.37E-05	1.26E-05	1.04E-05	6.69E-06
KIDNEYS	1.40E-05	1.45E-05	1.28E-05	1.06E-05	8.19E-06	6.00E-06
LIVER	1.44E-05	1.42E-05	1.42E-05	1.23E-05	8.99E-06	6.23E-06
LUNGS (USED FOR RESPIRATORY LYMPH NODES)	1.32E-05	1.34E-05	1.43E-05	1.26E-05	8.40E-06	5.41E-06
'OTHER TISSUES' (USED FOR MUSCLE)	1.43E-05 c	1.37E-05 c	1.25E-05 c	9.93E-06 c	6.60E-06 c	4.86E-06 c
OVARIES	1.66E-05	2.47E-05	1.42E-05	1.23E-05	8.16E-06	7.01E-06
PANCREAS	1.49E-05	1.43E-05	1.68E-05	1.24E-05	1.09E-05	6.65E-06
SKELETON (USED FOR BONE AND TOTAL ENDOSTEAL CELLS)	1.51E-05	1.61E-05	1.82E-05	2.01E-05	1.64E-05	8.44E-06
RED MARROW	1.56E-05	1.69E-05	1.95E-05	2.29E-05	1.90E-05	1.01E-05
YELLOW MARROW	1.53E-05	1.64E-05	1.88E-05	2.04E-05	1.59E-05	7.82E-06
SKIN	1.14E-05	9.15E-06	7.62E-06	5.38E-06	3.49E-06	2.66E-06
SPLEEN	1.70E-05	1.20E-05	1.34E-05	1.26E-05	8.43E-06	6.16E-06
TESTES	1.55E-05	1.27E-05	9.36E-06	8.90E-06	6.16E-06	4.36E-06
THYMUS	1.37E-05	1.97E-05	2.03E-05	1.06E-05	1.02E-05	5.29E-06
THYROID	1.97E-05	1.30E-05	1.54E-05	8.65E-06	7.45E-06	3.06E-06
UTERUS	1.58E-05	1.37E-05	1.44E-05	1.23E-05	1.04E-05	7.93E-06
TOTAL BODY	1.42E-05	1.38E-05	1.32E-05	1.14E-05	8.13E-06	5.41E-06

TARGET	ENERGY (MEV) 0.200	0.500	1.000	1.500	2.000	4.000
ADRENALS	6.51E-06	7.94E-06	5.71E-06	9.93E-06	5.28E-06	4.39E-06
BLADDER WALL	6.16E-06	6.24E-06	6.78E-06	5.62E-06	4.76E-06	5.41E-06
G. I. TRACT, STOMACH WALL	6.74E-06	6.14E-06	5.48E-06	4.09E-06	4.60E-06	3.98E-06
G. I. TRACT, SMALL INTESTINE PLUS CONTENTS	7.01E-06	6.81E-06	6.31E-06	5.85E-06	5.40E-06	4.82E-06
G. I. TRACT, UPPER LARGE INTESTINE WALL	6.31E-06	6.75E-06	6.02E-06	5.34E-06	5.15E-06	4.23E-06
G. I. TRACT, LOWER LARGE INTESTINE WALL	5.92E-06	6.83E-06	6.38E-06	5.89E-06	7.11E-06	4.03E-06
KIDNEYS	6.10E-06	6.06E-06	5.92E-06	4.88E-06	4.70E-06	3.94E-06
LIVER	5.78E-06	5.99E-06	5.92E-06	5.02E-06	4.74E-06	4.28E-06
LUNGS (USED FOR RESPIRATORY LYMPH NODES)	4.97E-06	5.36E-06	4.58E-06	4.05E-06	3.85E-06	3.45E-06
'OTHER TISSUES' (USED FOR MUSCLE)	4.82E-06 c	4.97E-06 c	4.75E-06 c	4.45E-06 c	4.18E-06 c	3.51E-06 c
OVARIES	6.51E-06	5.84E-06	4.20E-06	6.57E-06	6.14E-06	6.47E-06
PANCREAS	7.65E-06	5.95E-06	5.30E-06	4.90E-06	8.38E-06	3.84E-06
SKELETON (USED FOR BONE AND TOTAL ENDOSTEAL CELLS)	5.75E-06	5.16E-06	4.69E-06	4.33E-06	4.22E-06	3.37E-06
RED MARROW	6.57E-06	5.68E-06	5.17E-06	4.71E-06	4.65E-06	3.64E-06
YELLOW MARROW	5.33E-06	4.82E-06	4.40E-06	3.98E-06	3.87E-06	3.23E-06
SKIN	2.81E-06	3.09E-06	3.15E-06	3.14E-06	2.81E-06	2.42E-06
SPLEEN	6.25E-06	6.16E-06	5.74E-06	4.66E-06	4.24E-06	3.59E-06
TESTES	3.82E-06	6.49E-06	5.71E-06	4.90E-06	4.58E-06	4.31E-06
THYMUS	8.53E-06	5.22E-06	4.11E-06	6.07E-06	5.03E-06	5.34E-06
THYROID	4.35E-06	4.94E-06	5.24E-06	4.03E-06	4.12E-06	4.91E-06
UTERUS	7.52E-06	5.97E-06	8.02E-06	4.98E-06	6.21E-06	5.48E-06
TOTAL BODY	4.95E-06	4.97E-06	4.72E-06	4.40E-06	4.16E-06	3.48E-06

a-BUILD UP FACTOR METHOD.
b-EXTRAPOLATED FROM HIGHER ENERGY.
c-CALCULATED BY DIFFERENCE.
d-ADJUSTMENT ON COMPOSITION OR DENSITY.

ABBREVIATIONS USED IN THE TABLES

BLAD CONT	Bladder content
BLAD WALL	Bladder wall
BONE	Bone (see p. 66)
CAN BONE	Cancellous bone
COR BONE	Cortical bone
GI TRACT	Gastrointestinal tract
LLI CONT	Content of lower large intestine
LLI WALL	Wall of lower large intestine
OTHER TISSUE	Other tissue (see p. 65)
RESP LYM NODES	Respiratory lymph nodes
R MARROW	Red marrow
S CONT	Stomach content
SI + CONT	Small intestine plus contents
SKELETON	Skeleton (see p. 9 and p. 66)
S WALL	Stomach wall
T BODY	Total body
T E CL	Total endosteal cells
TR	Radioactive half-life
ULI CONT	Content of upper large intestine
ULI WALL	Wall of upper large intestine
Y MARROW	Yellow marrow
a	Estimated by buildup factor
b	Extrapolated value
c	Calculated by difference (see p. 65)
d	Adjustment on density or composition

Table 2. S, Dose Equivalent per Unit Accumulated Activity (rem/μCi-day)

S, AVERAGE DOSE EQUIVALENT PER UNIT ACCUMULATED ACTIVITY (REM/UCI-DAY), FOR 1-HYDROGEN-3 (TR=1.230E 01 YEARS)

DATE OF TABLE 11-27-74

TARGET ORGANS		SOURCE ORGANS										
		ADRENALS	BLAD CON	S CONT	SI+CONT	ULI CONT	LLI CONT	KIDNEYS	LIVER	LUNG	RESP LYM NODE	MUSCLE*
ADRENALS	B	2.09E-02	0.0	0.0	0.0	0.0	0.0	0.0	0.0	0.0	0.0	0.0
	T	2.09E-02	0.0	0.0	0.0	0.0	0.0	0.0	0.0	0.0	0.0	0.0
BLAD WALL	B	0.0	7.30E-04	0.0	0.0	0.0	0.0	0.0	0.0	0.0	0.0	0.0
	T	0.0	7.30E-04	0.0	0.0	0.0	0.0	0.0	0.0	0.0	0.0	0.0
GI TRACT S WALL	B	0.0	0.0	5.84E-04	0.0	0.0	0.0	0.0	0.0	0.0	0.0	0.0
	T	0.0	0.0	5.84E-04	0.0	0.0	0.0	0.0	0.0	0.0	0.0	0.0
SI+CONT	B	0.0	0.0	0.0	3.65E-04	0.0	0.0	0.0	0.0	0.0	0.0	0.0
	T	0.0	0.0	0.0	3.65E-04	0.0	0.0	0.0	0.0	0.0	0.0	0.0
ULI WALL	B	0.0	0.0	0.0	0.0	6.64E-04	0.0	0.0	0.0	0.0	0.0	0.0
	T	0.0	0.0	0.0	0.0	6.64E-04	0.0	0.0	0.0	0.0	0.0	0.0
LLI WALL	B	0.0	0.0	0.0	0.0	0.0	1.08E-03	0.0	0.0	0.0	0.0	0.0
	T	0.0	0.0	0.0	0.0	0.0	1.08E-03	0.0	0.0	0.0	0.0	0.0
KIDNEYS	B	0.0	0.0	0.0	0.0	0.0	0.0	9.42E-04	0.0	0.0	0.0	0.0
	T	0.0	0.0	0.0	0.0	0.0	0.0	9.42E-04	0.0	0.0	0.0	0.0
LIVER	B	0.0	0.0	0.0	0.0	0.0	0.0	0.0	1.62E-04	0.0	0.0	0.0
	T	0.0	0.0	0.0	0.0	0.0	0.0	0.0	1.62E-04	0.0	0.0	0.0
LUNGS	B	0.0	0.0	0.0	0.0	0.0	0.0	0.0	0.0	2.92E-04	2.92E-04	0.0
	T	0.0	0.0	0.0	0.0	0.0	0.0	0.0	0.0	2.92E-04	2.92E-04	0.0
RESP LYM NODE	B	0.0	0.0	0.0	0.0	0.0	0.0	0.0	0.0	0.0	1.95E-02	0.0
	T	0.0	0.0	0.0	0.0	0.0	0.0	0.0	0.0	0.0	1.95E-02	0.0
MUSCLE*	B	0.0	0.0	0.0	0.0	0.0	0.0	0.0	0.0	0.0	0.0	1.04E-05
	T	0.0	0.0	0.0	0.0	0.0	0.0	0.0	0.0	0.0	0.0	1.04E-05
OVARIES	B	0.0	0.0	0.0	0.0	0.0	0.0	0.0	0.0	0.0	0.0	0.0
	T	0.0	0.0	0.0	0.0	0.0	0.0	0.0	0.0	0.0	0.0	0.0

1-HYDROGEN-3 CONTINUED

SOURCE ORGANS

TARGET ORGANS		ADRENALS	BLAD CON	S CONT	SI+CONT	ULI CONT	LLI CONT	KIDNEYS	LIVER	LUNG	RESP LYM NODE	MUSCLE*
PANCREAS	B	0.0	0.0	0.0	0.0	0.0	0.0	0.0	0.0	0.0	0.0	0.0
	T	0.0	0.0	0.0	0.0	0.0	0.0	0.0	0.0	0.0	0.0	0.0
SKELETON BONE	B	0.0	0.0	0.0	0.0	0.0	0.0	0.0	0.0	0.0	0.0	0.0
	T	0.0	0.0	0.0	0.0	0.0	0.0	0.0	0.0	0.0	0.0	0.0
R MARROW	B	0.0	0.0	0.0	0.0	0.0	0.0	0.0	0.0	0.0	0.0	0.0
	T	0.0	0.0	0.0	0.0	0.0	0.0	0.0	0.0	0.0	0.0	0.0
Y MARROW	B	0.0	0.0	0.0	0.0	0.0	0.0	0.0	0.0	0.0	0.0	0.0
	T	0.0	0.0	0.0	0.0	0.0	0.0	0.0	0.0	0.0	0.0	0.0
T E CL	B	0.0	0.0	0.0	0.0	0.0	0.0	0.0	0.0	0.0	0.0	0.0
	T	0.0	0.0	0.0	0.0	0.0	0.0	0.0	0.0	0.0	0.0	0.0
SKIN	B	0.0	0.0	0.0	0.0	0.0	0.0	0.0	0.0	0.0	0.0	0.0
	T	0.0	0.0	0.0	0.0	0.0	0.0	0.0	0.0	0.0	0.0	0.0
SPLEEN	B	0.0	0.0	0.0	0.0	0.0	0.0	0.0	0.0	0.0	0.0	0.0
	T	0.0	0.0	0.0	0.0	0.0	0.0	0.0	0.0	0.0	0.0	0.0
TESTES	B	0.0	0.0	0.0	0.0	0.0	0.0	0.0	0.0	0.0	0.0	0.0
	T	0.0	0.0	0.0	0.0	0.0	0.0	0.0	0.0	0.0	0.0	0.0
THYMUS	B	0.0	0.0	0.0	0.0	0.0	0.0	0.0	0.0	0.0	0.0	0.0
	T	0.0	0.0	0.0	0.0	0.0	0.0	0.0	0.0	0.0	0.0	0.0
THYROID	B	0.0	0.0	0.0	0.0	0.0	0.0	0.0	0.0	0.0	0.0	0.0
	T	0.0	0.0	0.0	0.0	0.0	0.0	0.0	0.0	0.0	0.0	0.0
UTERUS	B	0.0	0.0	0.0	0.0	0.0	0.0	0.0	0.0	0.0	0.0	0.0
	T	0.0	0.0	0.0	0.0	0.0	0.0	0.0	0.0	0.0	0.0	0.0
T BODY	B	4.17E-06	4.69E-07	1.25E-06	3.34E-06	1.99E-06	2.47E-06	4.17E-06	4.17E-06	4.17E-06	4.17E-06	4.17E-06
	T	4.17E-06	4.69E-07	1.25E-06	3.34E-06	1.99E-06	2.47E-06	4.17E-06	4.17E-06	4.17E-06	4.17E-06	4.17E-06

CONTINUED NEXT PAGE

1-HYDROGEN-3 CONTINUED

TARGET ORGANS		SOURCE ORGANS										
		OVARIES	PANCREAS	COR BONE	CAN BONE	R MARROW	Y MARROW	SKIN	SPLEEN	TESTES	THYROID	T BODY
ADRENALS	B	0.0	0.0	0.0	0.0	0.0	0.0	0.0	0.0	0.0	0.0	4.17E-06
	T	0.0	0.0	0.0	0.0	0.0	0.0	0.0	0.0	0.0	0.0	4.17E-06
BLAD WALL	B	0.0	0.0	0.0	0.0	0.0	0.0	0.0	0.0	0.0	0.0	4.17E-06
	T	0.0	0.0	0.0	0.0	0.0	0.0	0.0	0.0	0.0	0.0	4.17E-06
GI TRACT												
S WALL	B	0.0	0.0	0.0	0.0	0.0	0.0	0.0	0.0	0.0	0.0	4.17E-06
	T	0.0	0.0	0.0	0.0	0.0	0.0	0.0	0.0	0.0	0.0	4.17E-06
SI+CONT	B	0.0	0.0	0.0	0.0	0.0	0.0	0.0	0.0	0.0	0.0	4.17E-06
	T	0.0	0.0	0.0	0.0	0.0	0.0	0.0	0.0	0.0	0.0	4.17E-06
ULI WALL	B	0.0	0.0	0.0	0.0	0.0	0.0	0.0	0.0	0.0	0.0	4.17E-06
	T	0.0	0.0	0.0	0.0	0.0	0.0	0.0	0.0	0.0	0.0	4.17E-06
LLI WALL	B	0.0	0.0	0.0	0.0	0.0	0.0	0.0	0.0	0.0	0.0	4.17E-06
	T	0.0	0.0	0.0	0.0	0.0	0.0	0.0	0.0	0.0	0.0	4.17E-06
KIDNEYS	B	0.0	0.0	0.0	0.0	0.0	0.0	0.0	0.0	0.0	0.0	4.17E-06
	T	0.0	0.0	0.0	0.0	0.0	0.0	0.0	0.0	0.0	0.0	4.17E-06
LIVER	B	0.0	0.0	0.0	0.0	0.0	0.0	0.0	0.0	0.0	0.0	4.17E-06
	T	0.0	0.0	0.0	0.0	0.0	0.0	0.0	0.0	0.0	0.0	4.17E-06
LUNGS	B	0.0	0.0	0.0	0.0	0.0	0.0	0.0	0.0	0.0	0.0	4.17E-06
	T	0.0	0.0	0.0	0.0	0.0	0.0	0.0	0.0	0.0	0.0	4.17E-06
RESP												
LYM NODE	B	0.0	0.0	0.0	0.0	0.0	0.0	0.0	0.0	0.0	0.0	4.17E-06
	T	0.0	0.0	0.0	0.0	0.0	0.0	0.0	0.0	0.0	0.0	4.17E-06
MUSCLE*	B	0.0	0.0	0.0	0.0	0.0	0.0	0.0	0.0	0.0	0.0	4.17E-06
	T	0.0	0.0	0.0	0.0	0.0	0.0	0.0	0.0	0.0	0.0	4.17E-06
OVARIES	B	2.65E-02	0.0	0.0	0.0	0.0	0.0	0.0	0.0	0.0	0.0	4.17E-06
	T	2.65E-02	0.0	0.0	0.0	0.0	0.0	0.0	0.0	0.0	0.0	4.17E-06

1-HYDROGEN-3 CONTINUED

TARGET ORGANS		SOURCE ORGANS										
		OVARIES	PANCREAS	COR BONE	CAN BONE	R MARROW	Y MARROW	SKIN	SPLEEN	TESTES	THYROID	T BODY
PANCREAS	B	0.0	2.92E-03	0.0	0.0	0.0	0.0	0.0	0.0	0.0	0.0	4.17E-06
	T	0.0	2.92E-03	0.0	0.0	0.0	0.0	0.0	0.0	0.0	0.0	4.17E-06
SKELETON BONE	B	0.0	0.0	5.84E-05	5.78E-05	3.97E-07	0.0	0.0	0.0	0.0	0.0	4.17E-06
	T	0.0	0.0	5.84E-05	5.78E-05	3.97E-07	0.0	0.0	0.0	0.0	0.0	4.17E-06
R MARROW	B	0.0	0.0	1.55E-08	1.99E-06	1.93E-04	0.0	0.0	0.0	0.0	0.0	4.17E-06
	T	0.0	0.0	1.55E-08	1.99E-06	1.93E-04	0.0	0.0	0.0	0.0	0.0	4.17E-06
Y MARROW	B	0.0	0.0	0.0	0.0	0.0	1.95E-04	0.0	0.0	0.0	0.0	4.17E-06
	T	0.0	0.0	0.0	0.0	0.0	1.95E-04	0.0	0.0	0.0	0.0	4.17E-06
T E CL	B	0.0	0.0	3.30E-06	6.90E-06	9.27E-05	4.87E-05	0.0	0.0	0.0	0.0	4.17E-06
	T	0.0	0.0	3.30E-06	6.90E-06	9.27E-05	4.87E-05	0.0	0.0	0.0	0.0	4.17E-06
SKIN	B	0.0	0.0	0.0	0.0	0.0	0.0	1.12E-04	0.0	0.0	0.0	4.17E-06
	T	0.0	0.0	0.0	0.0	0.0	0.0	1.12E-04	0.0	0.0	0.0	4.17E-06
SPLEEN	B	0.0	0.0	0.0	0.0	0.0	0.0	0.0	1.62E-03	0.0	0.0	4.17E-06
	T	0.0	0.0	0.0	0.0	0.0	0.0	0.0	1.62E-03	0.0	0.0	4.17E-06
TESTES	B	0.0	0.0	0.0	0.0	0.0	0.0	0.0	0.0	8.34E-03	0.0	4.17E-06
	T	0.0	0.0	0.0	0.0	0.0	0.0	0.0	0.0	8.34E-03	0.0	4.17E-06
THYMUS	B	0.0	0.0	0.0	0.0	0.0	0.0	0.0	0.0	0.0	0.0	4.17E-06
	T	0.0	0.0	0.0	0.0	0.0	0.0	0.0	0.0	0.0	0.0	4.17E-06
THYROID	B	0.0	0.0	0.0	0.0	0.0	0.0	0.0	0.0	0.0	1.46E-02	4.17E-06
	T	0.0	0.0	0.0	0.0	0.0	0.0	0.0	0.0	0.0	1.46E-02	4.17E-06
UTERUS	B	0.0	0.0	0.0	0.0	0.0	0.0	0.0	0.0	0.0	0.0	4.17E-06
	T	0.0	0.0	0.0	0.0	0.0	0.0	0.0	0.0	0.0	0.0	4.17E-06
T BODY	B	4.17E-06	4.17E-06	4.17E-06	4.17E-06	4.17E-06	4.17E-06	4.17E-06	4.17E-06	4.17E-06	4.17E-06	4.17E-06
	T	4.17E-06	4.17E-06	4.17E-06	4.17E-06	4.17E-06	4.17E-06	4.17E-06	4.17E-06	4.17E-06	4.17E-06	4.17E-06

*"MUSCLE" VALUES MAY BE USED FOR "SEPARABLE FAT" WITH ADJUSTMENT (SEE TEXT)
PRINCIPLE REFERENCE-LEDERER, C. M. TABLE OF ISOTOPES, 6TH ED.
DATE DECAY DATA REVIEWED-FEBRUARY 1972

S, AVERAGE DOSE EQUIVALENT PER UNIT ACCUMULATED ACTIVITY (REM/UCI-DAY), FOR 4-BERYLLIUM-7 (TR=5.330E 01 DAYS)

DATE OF TABLE 11-27-74

TARGET ORGANS		SOURCE ORGANS										
		ADRENALS	BLAD CON	S CONT	SI+CONT	ULI CONT	LLI CONT	KIDNEYS	LIVER	LUNG	RESP LYM NODE	MUSCLE*
ADRENALS	G	3.94E-03	1.99E-06	1.86E-05	1.10E-05	8.65E-06	4.28E-06	1.06E-04	4.25E-05	2.12E-05	2.12E-05	1.32E-05
	B	1.61E-04	0.0	0.0	0.0	0.0	0.0	0.0	0.0	0.0	0.0	0.0
	T	4.10E-03	1.99E-06	1.86E-05	1.10E-05	8.65E-06	4.28E-06	1.06E-04	4.25E-05	2.12E-05	2.12E-05	1.32E-05
BLAD WALL	G	9.39E-07	6.42E-04	3.82E-06	2.91E-05	1.67E-05	4.95E-05	3.27E-06	2.91E-06	6.27E-07	6.27E-07	1.54E-05
	B	0.0	5.63E-06	0.0	0.0	0.0	0.0	0.0	0.0	0.0	0.0	0.0
	T	9.39E-07	6.48E-04	3.82E-06	2.91E-05	1.67E-05	4.95E-05	3.27E-06	2.91E-06	6.27E-07	6.27E-07	1.54E-05
GI TRACT S WALL	G	2.56E-05	2.76E-06	4.50E-04	2.96E-05	3.14E-05	1.57E-05	2.92E-05	1.64E-05	1.59E-05	1.59E-05	1.22E-05
	B	0.0	0.0	4.50E-06	0.0	0.0	0.0	0.0	0.0	0.0	0.0	0.0
	T	2.56E-05	2.76E-06	4.55E-04	2.96E-05	3.14E-05	1.57E-05	2.92E-05	1.64E-05	1.59E-05	1.59E-05	1.22E-05
SI+CONT	G	8.28E-06	2.28E-05	2.29E-05	2.69E-04	1.42E-04	7.77E-05	2.39E-05	1.38E-05	2.36E-06	2.36E-06	1.35E-05
	B	0.0	0.0	0.0	2.81E-06	0.0	0.0	0.0	0.0	0.0	0.0	0.0
	T	8.28E-06	2.28E-05	2.29E-05	2.72E-04	1.42E-04	7.77E-05	2.39E-05	1.38E-05	2.36E-06	2.36E-06	1.35E-05
ULI WALL	G	9.01E-06	2.06E-05	2.87E-05	1.98E-04	3.69E-04	3.67E-05	2.50E-05	2.22E-05	3.23E-06	3.23E-06	1.41E-05
	B	0.0	0.0	0.0	0.0	5.11E-06	0.0	0.0	0.0	0.0	0.0	0.0
	T	9.01E-06	2.06E-05	2.87E-05	1.98E-04	3.75E-04	3.67E-05	2.50E-05	2.22E-05	3.23E-06	3.23E-06	1.41E-05
LLI WALL	G	3.02E-06	6.15E-05	1.10E-05	5.87E-05	2.59E-05	4.46E-04	7.63E-06	2.77E-06	7.02E-07	7.02E-07	1.47E-05
	B	0.0	0.0	0.0	0.0	0.0	8.34E-06	0.0	0.0	0.0	0.0	0.0
	T	3.02E-06	6.15E-05	1.10E-05	5.87E-05	2.59E-05	4.54E-04	7.63E-06	2.77E-06	7.02E-07	7.02E-07	1.47E-05
KIDNEYS	G	9.98E-05	3.29E-06	2.87E-05	2.74E-05	2.35E-05	7.26E-06	6.32E-04	3.27E-05	9.00E-06	9.00E-06	1.24E-05
	B	0.0	0.0	0.0	0.0	0.0	0.0	7.26E-06	0.0	0.0	0.0	0.0
	T	9.98E-05	3.29E-06	2.87E-05	2.74E-05	2.35E-05	7.26E-06	6.39E-04	3.27E-05	9.00E-06	9.00E-06	1.24E-05
LIVER	G	4.25E-05	2.42E-06	1.77E-05	1.57E-05	2.14E-05	2.97E-06	3.46E-05	2.23E-04	2.07E-05	2.07E-05	9.68E-06
	B	0.0	0.0	0.0	0.0	0.0	0.0	0.0	1.25E-06	0.0	0.0	0.0
	T	4.25E-05	2.42E-06	1.77E-05	1.57E-05	2.14E-05	2.97E-06	3.46E-05	2.24E-04	2.07E-05	2.07E-05	9.68E-06
LUNGS	G	2.03E-05	4.03E-07	1.60E-05	2.86E-06	2.91E-06	8.72E-07	8.19E-06	2.08E-05	1.26E-04	1.26E-04	1.16E-05
	B	0.0	0.0	0.0	0.0	0.0	0.0	0.0	0.0	2.25E-06	2.25E-06	0.0
	T	2.03E-05	4.03E-07	1.60E-05	2.86E-06	2.91E-06	8.72E-07	8.19E-06	2.08E-05	1.28E-04	1.28E-04	1.16E-05
RESP LYM NODE	G	2.03E-05	4.03E-07	1.60E-05	2.86E-06	2.91E-06	8.72E-07	8.19E-06	2.08E-05	1.26E-04	1.26E-04	1.16E-05
	B	0.0	0.0	0.0	0.0	0.0	0.0	0.0	0.0	0.0	1.50E-04	0.0
	T	2.03E-05	4.03E-07	1.60E-05	2.86E-06	2.91E-06	8.72E-07	8.19E-06	2.08E-05	1.26E-04	2.76E-04	1.16E-05
MUSCLE*	G	1.32E-05	1.54E-05	1.22E-05	1.35E-05	1.28E-05	1.47E-05	1.24E-05	9.68E-06	1.16E-05	1.16E-05	1.31E-05
	B	0.0	0.0	0.0	0.0	0.0	0.0	0.0	0.0	0.0	0.0	8.04E-08
	T	1.32E-05	1.54E-05	1.22E-05	1.35E-05	1.28E-05	1.47E-05	1.24E-05	9.68E-06	1.16E-05	1.16E-05	1.32E-05
OVARIES	G	4.77E-06	5.56E-05	4.24E-06	7.68E-05	1.10E-04	1.40E-04	1.00E-05	1.86E-06	1.31E-06	1.31E-06	1.73E-05
	B	0.0	0.0	0.0	0.0	0.0	0.0	0.0	0.0	0.0	0.0	0.0
	T	4.77E-06	5.56E-05	4.24E-06	7.68E-05	1.10E-04	1.40E-04	1.00E-05	1.86E-06	1.31E-06	1.31E-06	1.73E-05

4-BERYLLIUM-7 CONTINUED

SOURCE ORGANS

TARGET ORGANS		ADRENALS	BLAD CON	S CONT	SI+CONT	ULI CONT	LLI CONT	KIDNEYS	LIVER	LUNG	RESP LYM NODE	MUSCLE*
PANCREAS	G	7.29E-05	2.29E-06	1.52E-04	1.81E-05	1.59E-05	6.47E-06	5.67E-05	4.11E-05	2.41E-05	2.41E-05	1.56E-05
	B	0.0	0.0	0.0	0.0	0.0	0.0	0.0	0.0	0.0	0.0	0.0
	T	7.29E-05	2.29E-06	1.52E-04	1.81E-05	1.59E-05	6.47E-06	5.67E-05	4.11E-05	2.41E-05	2.41E-05	1.56E-05
SKELETON BONE	G	1.20E-05	5.23E-06	5.34E-06	6.94E-06	6.40E-06	9.20E-06	8.66E-06	6.49E-06	8.80E-06	8.80E-06	9.59E-06
	B	0.0	0.0	0.0	0.0	0.0	0.0	0.0	0.0	0.0	0.0	0.0
	T	1.20E-05	5.23E-06	5.34E-06	6.94E-06	6.40E-06	9.20E-06	8.66E-06	6.49E-06	8.80E-06	8.80E-06	9.59E-06
R MARROW	G	2.16E-05	1.12E-05	9.27E-06	2.21E-05	1.92E-05	2.76E-05	2.20E-05	9.54E-06	1.11E-05	1.11E-05	1.21E-05
	B	0.0	0.0	0.0	0.0	0.0	0.0	0.0	0.0	0.0	0.0	0.0
	T	2.16E-05	1.12E-05	9.27E-06	2.21E-05	1.92E-05	2.76E-05	2.20E-05	9.54E-06	1.11E-05	1.11E-05	1.21E-05
Y MARROW	G	1.16E-05	4.79E-06	7.42E-06	9.63E-06	9.09E-06	1.14E-05	1.08E-05	9.50E-06	9.26E-06	9.26E-06	9.83E-06
	B	0.0	0.0	0.0	0.0	0.0	0.0	0.0	0.0	0.0	0.0	0.0
	T	1.16E-05	4.79E-06	7.42E-06	9.63E-06	9.09E-06	1.14E-05	1.08E-05	9.50E-06	9.26E-06	9.26E-06	9.83E-06
T E CL	G	1.20E-05	5.23E-06	5.34E-06	6.94E-06	6.40E-06	9.20E-06	8.66E-06	6.49E-06	8.80E-06	8.80E-06	9.59E-06
	B	0.0	0.0	0.0	0.0	0.0	0.0	0.0	0.0	0.0	0.0	0.0
	T	1.20E-05	5.23E-06	5.34E-06	6.94E-06	6.40E-06	9.20E-06	8.66E-06	6.49E-06	8.80E-06	8.80E-06	9.59E-06
SKIN	G	5.85E-06	5.59E-06	5.07E-06	4.57E-06	4.77E-06	5.07E-06	5.72E-06	5.19E-06	5.85E-06	5.85E-06	7.83E-06
	B	0.0	0.0	0.0	0.0	0.0	0.0	0.0	0.0	0.0	0.0	0.0
	T	5.85E-06	5.59E-06	5.07E-06	4.57E-06	4.77E-06	5.07E-06	5.72E-06	5.19E-06	5.85E-06	5.85E-06	7.83E-06
SPLEEN	G	5.61E-05	1.92E-06	8.27E-05	1.36E-05	1.07E-05	8.06E-06	7.22E-05	8.63E-06	1.86E-05	1.86E-05	1.28E-05
	B	0.0	0.0	0.0	0.0	0.0	0.0	0.0	0.0	0.0	0.0	0.0
	T	5.61E-05	1.92E-06	8.27E-05	1.36E-05	1.07E-05	8.06E-06	7.22E-05	8.63E-06	1.86E-05	1.86E-05	1.28E-05
TESTES	G	6.00E-07	4.39E-05	2.33E-07	3.13E-06	4.35E-06	1.80E-05	1.29E-06	9.70E-07	2.05E-07	2.05E-07	1.07E-05
	B	0.0	0.0	0.0	0.0	0.0	0.0	0.0	0.0	0.0	0.0	0.0
	T	6.00E-07	4.39E-05	2.33E-07	3.13E-06	4.35E-06	1.80E-05	1.29E-06	9.70E-07	2.05E-07	2.05E-07	1.07E-05
THYMUS	G	7.91E-06	2.67E-07	1.99E-06	1.19E-06	1.31E-06	4.94E-07	3.42E-06	1.12E-05	3.19E-05	3.19E-05	1.54E-05
	B	0.0	0.0	0.0	0.0	0.0	0.0	0.0	0.0	0.0	0.0	0.0
	T	7.91E-06	2.67E-07	1.99E-06	1.19E-06	1.31E-06	4.94E-07	3.42E-06	1.12E-05	3.19E-05	3.19E-05	1.54E-05
THYROID	G	1.70E-06	7.86E-08	1.31E-06	3.36E-07	3.61E-07	1.52E-07	8.07E-07	1.63E-06	1.02E-05	1.02E-05	1.19E-05
	B	0.0	0.0	0.0	0.0	0.0	0.0	0.0	0.0	0.0	0.0	0.0
	T	1.70E-06	7.86E-08	1.31E-06	3.36E-07	3.61E-07	1.52E-07	8.07E-07	1.63E-06	1.02E-05	1.02E-05	1.19E-05
UTERUS	G	4.62E-06	1.29E-04	7.73E-06	7.58E-05	3.89E-05	4.92E-05	7.41E-06	3.79E-06	8.32E-07	8.32E-07	1.66E-05
	B	0.0	0.0	0.0	0.0	0.0	0.0	0.0	0.0	0.0	0.0	0.0
	T	4.62E-06	1.29E-04	7.73E-06	7.58E-05	3.89E-05	4.92E-05	7.41E-06	3.79E-06	8.32E-07	8.32E-07	1.66E-05
T BODY	G	1.46E-05	1.62E-05	1.54E-05	1.70E-05	1.66E-05	1.65E-05	1.47E-05	1.48E-05	1.26E-05	1.26E-05	1.25E-05
	B	3.22E-08	3.62E-09	9.65E-09	2.57E-08	1.53E-08	1.91E-08	3.22E-08	3.22E-08	3.22E-08	3.22E-08	3.22E-08
	T	1.46E-05	1.62E-05	1.54E-05	1.70E-05	1.66E-05	1.65E-05	1.47E-05	1.48E-05	1.26E-05	1.26E-05	1.25E-05

CONTINUED NEXT PAGE

4-BERYLLIUM-7 CONTINUED

TARGET ORGANS		SOURCE ORGANS										
		OVARIES	PANCREAS	COR BONE	CAN BONE	R MARROW	Y MARROW	SKIN	SPLEEN	TESTES	THYROID	T BODY
ADRENALS	G	5.16E-06	7.37E-05	1.45E-05	1.45E-05	1.55E-05	9.63E-06	5.83E-06	5.25E-05	6.00E-07	1.70E-06	1.97E-05
	B	0.0	0.0	0.0	0.0	0.0	0.0	0.0	0.0	0.0	0.0	3.22E-08
	T	5.16E-06	7.37E-05	1.45E-05	1.45E-05	1.55E-05	9.63E-06	5.83E-06	5.25E-05	6.00E-07	1.70E-06	1.97E-05
BLAD WALL	G	5.79E-05	1.69E-06	5.64E-06	5.64E-06	5.90E-06	2.31E-06	5.38E-06	1.17E-06	4.39E-05	7.93E-08	1.57E-05
	B	0.0	0.0	0.0	0.0	0.0	0.0	0.0	0.0	0.0	0.0	3.22E-08
	T	5.79E-05	1.69E-06	5.64E-06	5.64E-06	5.90E-06	2.31E-06	5.38E-06	1.17E-06	4.39E-05	7.93E-08	1.57E-05
GI TRACT S WALL	G	7.28E-06	1.48E-04	5.10E-06	5.10E-06	8.68E-06	6.45E-06	5.58E-06	8.51E-05	9.80E-07	1.06E-06	1.56E-05
	B	0.0	0.0	0.0	0.0	0.0	0.0	0.0	0.0	0.0	0.0	3.22E-08
	T	7.28E-06	1.48E-04	5.10E-06	5.10E-06	8.68E-06	6.45E-06	5.58E-06	8.51E-05	9.80E-07	1.06E-06	1.56E-05
SI+CONT	G	1.03E-04	1.54E-05	6.96E-06	6.96E-06	2.33E-05	9.18E-06	4.76E-06	1.21E-05	4.59E-06	6.85E-08	1.72E-05
	B	0.0	0.0	0.0	0.0	0.0	0.0	0.0	0.0	0.0	0.0	3.22E-08
	T	1.03E-04	1.54E-05	6.96E-06	6.96E-06	2.33E-05	9.18E-06	4.76E-06	1.21E-05	4.59E-06	6.85E-08	1.72E-05
ULI WALL	G	9.64E-05	1.88E-05	6.10E-06	6.10E-06	1.80E-05	7.51E-06	4.97E-06	1.20E-05	2.82E-06	9.21E-08	1.69E-05
	B	0.0	0.0	0.0	0.0	0.0	0.0	0.0	0.0	0.0	0.0	3.22E-08
	T	9.64E-05	1.88E-05	6.10E-06	6.10E-06	1.80E-05	7.51E-06	4.97E-06	1.20E-05	2.82E-06	9.21E-08	1.69E-05
LLI WALL	G	1.23E-04	4.67E-06	8.27E-06	8.27E-06	2.66E-05	7.23E-06	5.17E-06	6.04E-06	2.48E-05	1.26E-07	1.70E-05
	B	0.0	0.0	0.0	0.0	0.0	0.0	0.0	0.0	0.0	0.0	3.22E-08
	T	1.23E-04	4.67E-06	8.27E-06	8.27E-06	2.66E-05	7.23E-06	5.17E-06	6.04E-06	2.48E-05	1.26E-07	1.70E-05
KIDNEYS	G	9.78E-06	5.39E-05	7.89E-06	7.89E-06	2.06E-05	1.05E-05	6.46E-06	7.40E-05	8.56E-07	4.20E-07	1.53E-05
	B	0.0	0.0	0.0	0.0	0.0	0.0	0.0	0.0	0.0	0.0	3.22E-08
	T	9.78E-06	5.39E-05	7.89E-06	7.89E-06	2.06E-05	1.05E-05	6.46E-06	7.40E-05	8.56E-07	4.20E-07	1.53E-05
LIVER	G	5.31E-06	3.58E-05	6.12E-06	6.12E-06	8.86E-06	9.45E-06	5.83E-06	9.29E-06	4.40E-07	1.36E-06	1.50E-05
	B	0.0	0.0	0.0	0.0	0.0	0.0	0.0	0.0	0.0	0.0	3.22E-08
	T	5.31E-06	3.58E-05	6.12E-06	6.12E-06	8.86E-06	9.45E-06	5.83E-06	9.29E-06	4.40E-07	1.36E-06	1.51E-05
LUNGS	G	9.52E-07	2.08E-05	8.53E-06	8.53E-06	1.04E-05	8.67E-06	5.88E-06	1.91E-05	1.23E-07	9.17E-06	1.34E-05
	B	0.0	0.0	0.0	0.0	0.0	0.0	0.0	0.0	0.0	0.0	3.22E-08
	T	9.52E-07	2.08E-05	8.53E-06	8.53E-06	1.04E-05	8.67E-06	5.88E-06	1.91E-05	1.23E-07	9.17E-06	1.34E-05
RESP LYM NODE	G	9.52E-07	2.08E-05	8.53E-06	8.53E-06	1.04E-05	8.67E-06	5.88E-06	1.91E-05	1.23E-07	9.17E-06	1.34E-05
	B	0.0	0.0	0.0	0.0	0.0	0.0	0.0	0.0	0.0	0.0	3.22E-08
	T	9.52E-07	2.08E-05	8.53E-06	8.53E-06	1.04E-05	8.67E-06	5.88E-06	1.91E-05	1.23E-07	9.17E-06	1.34E-05
MUSCLE*	G	1.73E-05	1.56E-05	9.59E-06	9.59E-06	1.13E-05	8.92E-06	7.83E-06	1.28E-05	1.07E-05	1.19E-05	1.25E-05
	B	0.0	0.0	0.0	0.0	0.0	0.0	0.0	0.0	0.0	0.0	3.22E-08
	T	1.73E-05	1.56E-05	9.59E-06	9.59E-06	1.13E-05	8.92E-06	7.83E-06	1.28E-05	1.07E-05	1.19E-05	1.25E-05
OVARIES	G	6.56E-03	3.20E-06	9.19E-06	9.19E-06	3.06E-05	7.71E-06	2.71E-06	8.99E-06	0.0	1.50E-07	1.48E-05
	B	2.05E-04	0.0	0.0	0.0	0.0	0.0	0.0	0.0	0.0	0.0	3.22E-08
	T	6.76E-03	3.20E-06	9.19E-06	9.19E-06	3.06E-05	7.71E-06	2.71E-06	8.99E-06	0.0	1.50E-07	1.48E-05

4-BERYLLIUM-7 CONTINUED

SOURCE ORGANS

TARGET ORGANS		OVARIES	PANCREAS	COR BONE	CAN BONE	R MARROW	Y MARROW	SKIN	SPLEEN	TESTES	THYROID	T BODY
PANCREAS	G	4.76E-06	1.83E-03	7.98E-06	7.98E-06	1.49E-05	1.15E-05	5.10E-06	1.68E-04	3.50E-07	6.19E-07	1.53E-05
	B	0.0	2.25E-05	0.0	0.0	0.0	0.0	0.0	0.0	0.0	0.0	3.22E-08
	T	4.76E-06	1.85E-03	7.98E-06	7.98E-06	1.49E-05	1.15E-05	5.10E-06	1.68E-04	3.50E-07	6.19E-07	1.53E-05
SKELETON BONE	G	8.18E-06	8.13E-06	3.02E-05	3.02E-05	2.02E-05	2.24E-05	7.37E-06	6.77E-06	5.82E-06	6.63E-06	1.31E-05
	B	0.0	0.0	4.50E-07	4.50E-07	2.68E-11	0.0	0.0	0.0	0.0	0.0	3.22E-08
	T	8.18E-06	8.13E-06	3.07E-05	3.07E-05	2.02E-05	2.24E-05	7.37E-06	6.77E-06	5.82E-06	6.63E-06	1.31E-05
R MARROW	G	2.74E-05	1.54E-05	2.69E-05	2.69E-05	6.48E-05	2.32E-05	6.88E-06	1.00E-05	4.65E-06	7.34E-06	1.45E-05
	B	0.0	0.0	1.05E-12	1.34E-10	1.50E-06	0.0	0.0	0.0	0.0	0.0	3.22E-08
	T	2.74E-05	1.54E-05	2.69E-05	2.69E-05	6.63E-05	2.32E-05	6.88E-06	1.00E-05	4.65E-06	7.34E-06	1.45E-05
Y MARROW	G	1.09E-05	9.54E-06	2.60E-05	2.60E-05	2.49E-05	3.79E-05	7.80E-06	1.02E-05	2.48E-06	3.51E-06	1.22E-05
	B	0.0	0.0	0.0	0.0	0.0	1.50E-06	0.0	0.0	0.0	0.0	3.22E-08
	T	1.09E-05	9.54E-06	2.60E-05	2.60E-05	2.49E-05	3.94E-05	7.80E-06	1.02E-05	2.48E-06	3.51E-06	1.22E-05
T E CL	G	8.18E-06	8.13E-06	3.02E-05	3.02E-05	2.73E-05	2.47E-05	7.37E-06	6.77E-06	5.82E-06	6.63E-06	1.31E-05
	B	0.0	0.0	2.23E-10	4.66E-10	7.50E-07	3.75E-07	0.0	0.0	0.0	0.0	3.22E-08
	T	8.18E-06	8.13E-06	3.02E-05	3.02E-05	2.80E-05	2.51E-05	7.37E-06	6.77E-06	5.82E-06	6.63E-06	1.31E-05
SKIN	G	4.53E-06	4.35E-06	7.48E-06	7.48E-06	6.47E-06	8.36E-06	1.73E-05	5.43E-06	1.37E-05	7.45E-06	7.73E-06
	B	0.0	0.0	0.0	0.0	0.0	0.0	8.66E-07	0.0	0.0	0.0	3.22E-08
	T	4.53E-06	4.35E-06	7.48E-06	7.48E-06	6.47E-06	8.36E-06	1.81E-05	5.43E-06	1.37E-05	7.45E-06	7.76E-06
SPLEEN	G	5.96E-06	1.66E-04	7.19E-06	7.19E-06	7.04E-06	8.53E-06	5.68E-06	1.13E-03	1.07E-06	1.11E-06	1.55E-05
	B	0.0	0.0	0.0	0.0	0.0	0.0	0.0	1.25E-05	0.0	0.0	3.22E-08
	T	5.96E-06	1.66E-04	7.19E-06	7.19E-06	7.04E-06	8.53E-06	5.68E-06	1.14E-03	1.07E-06	1.11E-06	1.55E-05
TESTES	G	0.0	5.53E-07	5.02E-06	5.02E-06	3.68E-06	8.52E-06	7.37E-06	8.14E-07	3.08E-03	2.78E-08	1.58E-05
	B	0.0	0.0	0.0	0.0	0.0	0.0	0.0	0.0	6.43E-05	0.0	3.22E-08
	T	0.0	5.53E-07	5.02E-06	5.02E-06	3.68E-06	8.52E-06	7.37E-06	8.14E-07	3.15E-03	2.78E-08	1.59E-05
THYMUS	G	5.17E-07	4.84E-06	6.45E-06	6.45E-06	4.07E-06	3.43E-06	7.43E-06	4.09E-06	9.20E-08	3.83E-05	1.38E-05
	B	0.0	0.0	0.0	0.0	0.0	0.0	0.0	0.0	0.0	0.0	3.22E-08
	T	5.17E-07	4.84E-06	6.45E-06	6.45E-06	4.07E-06	3.43E-06	7.43E-06	4.09E-06	9.20E-08	3.83E-05	1.38E-05
THYROID	G	1.50E-07	1.62E-06	9.61E-06	9.61E-06	7.76E-06	4.35E-06	7.24E-06	1.27E-06	2.78E-08	4.15E-03	1.23E-05
	B	0.0	0.0	0.0	0.0	0.0	0.0	0.0	0.0	0.0	1.13E-04	3.22E-08
	T	1.50E-07	1.62E-06	9.61E-06	9.61E-06	7.76E-06	4.35E-06	7.24E-06	1.27E-06	2.78E-08	4.26E-03	1.23E-05
UTERUS	G	1.58E-04	5.49E-06	5.02E-06	5.02E-06	1.69E-05	5.77E-06	4.82E-06	4.01E-06	0.0	1.42E-07	1.53E-05
	B	0.0	0.0	0.0	0.0	0.0	0.0	0.0	0.0	0.0	0.0	3.22E-08
	T	1.58E-04	5.49E-06	5.02E-06	5.02E-06	1.69E-05	5.77E-06	4.82E-06	4.01E-06	0.0	1.42E-07	1.53E-05
T BODY	G	1.74E-05	1.70E-05	1.24E-05	1.24E-05	1.38E-05	1.11E-05	7.87E-06	1.47E-05	1.23E-05	1.13E-05	1.25E-05
	B	3.22E-08	3.22E-08	3.22E-08	3.22E-08	3.22E-08	3.22E-08	3.22E-08	3.22E-08	3.22E-08	3.22E-08	3.22E-08
	T	1.74E-05	1.70E-05	1.25E-05	1.25E-05	1.39E-05	1.12E-05	7.90E-06	1.47E-05	1.24E-05	1.13E-05	1.25E-05

*"MUSCLE" VALUES MAY BE USED FOR "SEPARABLE FAT" WITH ADJUSTMENT (SEE TEXT)
PRINCIPLE REFERENCE-TAYLOR, J. G. V. ET AL., CAN. J. PHYS. 40, 926 (1962)
DATE DECAY DATA REVIEWED-SEPTEMBER 1971

S, AVERAGE DOSE EQUIVALENT PER UNIT ACCUMULATED ACTIVITY (REM/UCI-DAY), FOR 6-CARBON-14 (TR=5.730E 03 YEARS)

DATE OF TABLE 11-27-74

TARGET ORGANS		SOURCE ORGANS										
		ADRENALS	BLAD CON	S CONT	SI+CONT	ULI CONT	LLI CONT	KIDNEYS	LIVER	LUNG	RESP LYM NODE	MUSCLE*
ADRENALS	B	1.80E-01	0.0	0.0	0.0	0.0	0.0	0.0	0.0	0.0	0.0	0.0
	T	1.80E-01	0.0	0.0	0.0	0.0	0.0	0.0	0.0	0.0	0.0	0.0
BLAD WALL	B	0.0	6.31E-03	0.0	0.0	0.0	0.0	0.0	0.0	0.0	0.0	0.0
	T	0.0	6.31E-03	0.0	0.0	0.0	0.0	0.0	0.0	0.0	0.0	0.0
GI TRACT S WALL	B	0.0	0.0	5.04E-03	0.0	0.0	0.0	0.0	0.0	0.0	0.0	0.0
	T	0.0	0.0	5.04E-03	0.0	0.0	0.0	0.0	0.0	0.0	0.0	0.0
SI+CONT	B	0.0	0.0	0.0	3.15E-03	0.0	0.0	0.0	0.0	0.0	0.0	0.0
	T	0.0	0.0	0.0	3.15E-03	0.0	0.0	0.0	0.0	0.0	0.0	0.0
ULI WALL	B	0.0	0.0	0.0	0.0	5.73E-03	0.0	0.0	0.0	0.0	0.0	0.0
	T	0.0	0.0	0.0	0.0	5.73E-03	0.0	0.0	0.0	0.0	0.0	0.0
LLI WALL	B	0.0	0.0	0.0	0.0	0.0	9.34E-03	0.0	0.0	0.0	0.0	0.0
	T	0.0	0.0	0.0	0.0	0.0	9.34E-03	0.0	0.0	0.0	0.0	0.0
KIDNEYS	B	0.0	0.0	0.0	0.0	0.0	0.0	8.14E-03	0.0	0.0	0.0	0.0
	T	0.0	0.0	0.0	0.0	0.0	0.0	8.14E-03	0.0	0.0	0.0	0.0
LIVER	B	0.0	0.0	0.0	0.0	0.0	0.0	0.0	1.40E-03	0.0	0.0	0.0
	T	0.0	0.0	0.0	0.0	0.0	0.0	0.0	1.40E-03	0.0	0.0	0.0
LUNGS	B	0.0	0.0	0.0	0.0	0.0	0.0	0.0	0.0	2.52E-03	2.52E-03	0.0
	T	0.0	0.0	0.0	0.0	0.0	0.0	0.0	0.0	2.52E-03	2.52E-03	0.0
RESP LYM NODE	B	0.0	0.0	0.0	0.0	0.0	0.0	0.0	0.0	2.52E-03	1.68E-01	0.0
	T	0.0	0.0	0.0	0.0	0.0	0.0	0.0	0.0	2.52E-03	1.68E-01	0.0
MUSCLE*	B	0.0	0.0	0.0	0.0	0.0	0.0	0.0	0.0	0.0	0.0	9.01E-05
	T	0.0	0.0	0.0	0.0	0.0	0.0	0.0	0.0	0.0	0.0	9.01E-05
OVARIES	B	0.0	0.0	0.0	0.0	0.0	0.0	0.0	0.0	0.0	0.0	0.0
	T	0.0	0.0	0.0	0.0	0.0	0.0	0.0	0.0	0.0	0.0	0.0

6-CARBON-14 CONTINUED

SOURCE ORGANS

TARGET ORGANS		ADRENALS	BLAD CON	S CONT	SI+CONT	ULI CONT	LLI CONT	KIDNEYS	LIVER	LUNG	RESP LYM NODE	MUSCLE*
PANCREAS	B	0.0	0.0	0.0	0.0	0.0	0.0	0.0	0.0	0.0	0.0	0.0
	T	0.0	0.0	0.0	0.0	0.0	0.0	0.0	0.0	0.0	0.0	0.0
SKELETON BONE	B	0.0	0.0	0.0	0.0	0.0	0.0	0.0	0.0	0.0	0.0	0.0
	T	0.0	0.0	0.0	0.0	0.0	0.0	0.0	0.0	0.0	0.0	0.0
R MARROW	B	0.0	0.0	0.0	0.0	0.0	0.0	0.0	0.0	0.0	0.0	0.0
	T	0.0	0.0	0.0	0.0	0.0	0.0	0.0	0.0	0.0	0.0	0.0
Y MARROW	B	0.0	0.0	0.0	0.0	0.0	0.0	0.0	0.0	0.0	0.0	0.0
	T	0.0	0.0	0.0	0.0	0.0	0.0	0.0	0.0	0.0	0.0	0.0
T E CL	B	0.0	0.0	0.0	0.0	0.0	0.0	0.0	0.0	0.0	0.0	0.0
	T	0.0	0.0	0.0	0.0	0.0	0.0	0.0	0.0	0.0	0.0	0.0
SKIN	B	0.0	0.0	0.0	0.0	0.0	0.0	0.0	0.0	0.0	0.0	0.0
	T	0.0	0.0	0.0	0.0	0.0	0.0	0.0	0.0	0.0	0.0	0.0
SPLEEN	B	0.0	0.0	0.0	0.0	0.0	0.0	0.0	0.0	0.0	0.0	0.0
	T	0.0	0.0	0.0	0.0	0.0	0.0	0.0	0.0	0.0	0.0	0.0
TESTES	B	0.0	0.0	0.0	0.0	0.0	0.0	0.0	0.0	0.0	0.0	0.0
	T	0.0	0.0	0.0	0.0	0.0	0.0	0.0	0.0	0.0	0.0	0.0
THYMUS	B	0.0	0.0	0.0	0.0	0.0	0.0	0.0	0.0	0.0	0.0	0.0
	T	0.0	0.0	0.0	0.0	0.0	0.0	0.0	0.0	0.0	0.0	0.0
THYROID	B	0.0	0.0	0.0	0.0	0.0	0.0	0.0	0.0	0.0	0.0	0.0
	T	0.0	0.0	0.0	0.0	0.0	0.0	0.0	0.0	0.0	0.0	0.0
UTERUS	B	0.0	0.0	0.0	0.0	0.0	0.0	0.0	0.0	0.0	0.0	0.0
	T	0.0	0.0	0.0	0.0	0.0	0.0	0.0	0.0	0.0	0.0	0.0
T BODY	B	3.60E-05	4.05E-06	1.08E-05	2.88E-05	1.72E-05	2.14E-05	3.60E-05	3.60E-05	3.60E-05	3.60E-05	3.60E-05
	T	3.60E-05	4.05E-06	1.08E-05	2.88E-05	1.72E-05	2.14E-05	3.60E-05	3.60E-05	3.60E-05	3.60E-05	3.60E-05

CONTINUED NEXT PAGE

6-CARBON-14 CONTINUED

TARGET ORGANS		SOURCE ORGANS										
		OVARIES	PANCREAS	COR BONE	CAN BONE	R MARROW	Y MARROW	SKIN	SPLEEN	TESTES	THYROID	T BODY
ADRENALS	B	0.0	0.0	0.0	0.0	0.0	0.0	0.0	0.0	0.0	0.0	3.60E-05
	T	0.0	0.0	0.0	0.0	0.0	0.0	0.0	0.0	0.0	0.0	3.60E-05
BLAD WALL	B	0.0	0.0	0.0	0.0	0.0	0.0	0.0	0.0	0.0	0.0	3.60E-05
	T	0.0	0.0	0.0	0.0	0.0	0.0	0.0	0.0	0.0	0.0	3.60E-05
GI TRACT S WALL	B	0.0	0.0	0.0	0.0	0.0	0.0	0.0	0.0	0.0	0.0	3.60E-05
	T	0.0	0.0	0.0	0.0	0.0	0.0	0.0	0.0	0.0	0.0	3.60E-05
SI+CONT	B	0.0	0.0	0.0	0.0	0.0	0.0	0.0	0.0	0.0	0.0	3.60E-05
	T	0.0	0.0	0.0	0.0	0.0	0.0	0.0	0.0	0.0	0.0	3.60E-05
ULI WALL	B	0.0	0.0	0.0	0.0	0.0	0.0	0.0	0.0	0.0	0.0	3.60E-05
	T	0.0	0.0	0.0	0.0	0.0	0.0	0.0	0.0	0.0	0.0	3.60E-05
LLI WALL	B	0.0	0.0	0.0	0.0	0.0	0.0	0.0	0.0	0.0	0.0	3.60E-05
	T	0.0	0.0	0.0	0.0	0.0	0.0	0.0	0.0	0.0	0.0	3.60E-05
KIDNEYS	B	0.0	0.0	0.0	0.0	0.0	0.0	0.0	0.0	0.0	0.0	3.60E-05
	T	0.0	0.0	0.0	0.0	0.0	0.0	0.0	0.0	0.0	0.0	3.60E-05
LIVER	B	0.0	0.0	0.0	0.0	0.0	0.0	0.0	0.0	0.0	0.0	3.60E-05
	T	0.0	0.0	0.0	0.0	0.0	0.0	0.0	0.0	0.0	0.0	3.60E-05
LUNGS	B	0.0	0.0	0.0	0.0	0.0	0.0	0.0	0.0	0.0	0.0	3.60E-05
	T	0.0	0.0	0.0	0.0	0.0	0.0	0.0	0.0	0.0	0.0	3.60E-05
RESP LYM NODE	B	0.0	0.0	0.0	0.0	0.0	0.0	0.0	0.0	0.0	0.0	3.60E-05
	T	0.0	0.0	0.0	0.0	0.0	0.0	0.0	0.0	0.0	0.0	3.60E-05
MUSCLE*	B	0.0	0.0	0.0	0.0	0.0	0.0	0.0	0.0	0.0	0.0	3.60E-05
	T	0.0	0.0	0.0	0.0	0.0	0.0	0.0	0.0	0.0	0.0	3.60E-05
OVARIES	B	2.29E-01	0.0	0.0	0.0	0.0	0.0	0.0	0.0	0.0	0.0	3.60E-05
	T	2.29E-01	0.0	0.0	0.0	0.0	0.0	0.0	0.0	0.0	0.0	3.60E-05

6-CARBON-14 CONTINUED

TARGET ORGANS		SOURCE ORGANS										
		OVARIES	PANCREAS	COR BONE	CAN BONE	R MARROW	Y MARROW	SKIN	SPLEEN	TESTES	THYROID	T BODY
PANCREAS	B	0.0	2.52E-02	0.0	0.0	0.0	0.0	0.0	0.0	0.0	0.0	3.60E-05
	T	0.0	2.52E-02	0.0	0.0	0.0	0.0	0.0	0.0	0.0	0.0	3.60E-05
SKELETON BONE	B	0.0	0.0	5.04E-04	4.60E-04	2.98E-05	0.0	0.0	0.0	0.0	0.0	3.60E-05
	T	0.0	0.0	5.04E-04	4.60E-04	2.98E-05	0.0	0.0	0.0	0.0	0.0	3.60E-05
R MARROW	B	0.0	0.0	1.16E-06	1.49E-04	1.58E-03	0.0	0.0	0.0	0.0	0.0	3.60E-05
	T	0.0	0.0	1.16E-06	1.49E-04	1.58E-03	0.0	0.0	0.0	0.0	0.0	3.60E-05
Y MARROW	B	0.0	0.0	0.0	0.0	0.0	1.68E-03	0.0	0.0	0.0	0.0	3.60E-05
	T	0.0	0.0	0.0	0.0	0.0	1.68E-03	0.0	0.0	0.0	0.0	3.60E-05
T E CL	B	0.0	0.0	2.45E-04	5.13E-04	4.99E-04	4.20E-04	0.0	0.0	0.0	0.0	3.60E-05
	T	0.0	0.0	2.45E-04	5.13E-04	4.99E-04	4.20E-04	0.0	0.0	0.0	0.0	3.60E-05
SKIN	B	0.0	0.0	0.0	0.0	0.0	0.0	9.70E-04	0.0	0.0	0.0	3.60E-05
	T	0.0	0.0	0.0	0.0	0.0	0.0	9.70E-04	0.0	0.0	0.0	3.60E-05
SPLEEN	B	0.0	0.0	0.0	0.0	0.0	0.0	0.0	1.40E-02	0.0	0.0	3.60E-05
	T	0.0	0.0	0.0	0.0	0.0	0.0	0.0	1.40E-02	0.0	0.0	3.60E-05
TESTES	B	0.0	0.0	0.0	0.0	0.0	0.0	0.0	0.0	7.21E-02	0.0	3.60E-05
	T	0.0	0.0	0.0	0.0	0.0	0.0	0.0	0.0	7.21E-02	0.0	3.60E-05
THYMUS	B	0.0	0.0	0.0	0.0	0.0	0.0	0.0	0.0	0.0	0.0	3.60E-05
	T	0.0	0.0	0.0	0.0	0.0	0.0	0.0	0.0	0.0	0.0	3.60E-05
THYROID	B	0.0	0.0	0.0	0.0	0.0	0.0	0.0	0.0	0.0	1.26E-01	3.60E-05
	T	0.0	0.0	0.0	0.0	0.0	0.0	0.0	0.0	0.0	1.26E-01	3.60E-05
UTERUS	B	0.0	0.0	0.0	0.0	0.0	0.0	0.0	0.0	0.0	0.0	3.60E-05
	T	0.0	0.0	0.0	0.0	0.0	0.0	0.0	0.0	0.0	0.0	3.60E-05
T BODY	B	3.60E-05	3.60E-05	3.60E-05	3.60E-05	3.60E-05	3.60E-05	3.60E-05	3.60E-05	3.60E-05	3.60E-05	3.60E-05
	T	3.60E-05	3.60E-05	3.60E-05	3.60E-05	3.60E-05	3.60E-05	3.60E-05	3.60E-05	3.60E-05	3.60E-05	3.60E-05

*"MUSCLE" VALUES MAY BE USED FOR "SEPARABLE FAT" WITH ADJUSTMENT (SEE TEXT)
PRINCIPLE REFERENCE-LEDERER, C. M. ET AL., TABLE OF ISOTOPES, 6TH ED.
DATE DECAY DATA REVIEWED-FEBRUARY 1972

S, AVERAGE DOSE EQUIVALENT PER UNIT ACCUMULATED ACTIVITY (REM/UCI-DAY), FOR 7-NITROGEN-13 (TR=1.000E 01 MIN)

DATE OF TABLE 11-27-74

TARGET ORGANS		SOURCE ORGANS										
		ADRENALS	BLAD CON	S CONT	SI+CONT	ULI CONT	LLI CONT	KIDNEYS	LIVER	LUNG	RESP LYM NODE	MUSCLE*
ADRENALS	G	8.22E-02	4.17E-05	3.80E-04	2.22E-04	1.81E-04	8.90E-05	2.23E-03	8.76E-04	4.38E-04	4.38E-04	2.75E-04
	B	1.78E 00	0.0	0.0	0.0	0.0	0.0	0.0	0.0	0.0	0.0	0.0
	T	1.87E 00	4.17E-05	3.80E-04	2.22E-04	1.81E-04	8.90E-05	2.23E-03	8.76E-04	4.38E-04	4.38E-04	2.75E-04
BLAD WALL	G	1.98E-05	1.33E-02	8.26E-05	6.10E-04	3.42E-04	1.01E-03	6.91E-05	6.23E-05	1.34E-05	1.34E-05	3.20E-04
	B	0.0	6.24E-02	0.0	0.0	0.0	0.0	0.0	0.0	0.0	0.0	0.0
	T	1.98E-05	7.58E-02	8.26E-05	6.10E-04	3.42E-04	1.01E-03	6.91E-05	6.23E-05	1.34E-05	1.34E-05	3.20E-04
GI TRACT S WALL	G	5.30E-04	5.85E-05	9.34E-03	6.08E-04	6.49E-04	3.24E-04	6.03E-04	3.40E-04	3.30E-04	3.30E-04	2.53E-04
	B	0.0	0.0	4.99E-02	0.0	0.0	0.0	0.0	0.0	0.0	0.0	0.0
	T	5.30E-04	5.85E-05	5.93E-02	6.08E-04	6.49E-04	3.24E-04	6.03E-04	3.40E-04	3.30E-04	3.30E-04	2.53E-04
SI+CONT	G	1.73E-04	4.69E-04	4.74E-04	5.57E-03	2.93E-03	1.60E-03	4.92E-04	2.84E-04	5.02E-05	5.02E-05	2.79E-04
	B	0.0	0.0	0.0	3.12E-02	0.0	0.0	0.0	0.0	0.0	0.0	0.0
	T	1.73E-04	4.69E-04	4.74E-04	3.68E-02	2.93E-03	1.60E-03	4.92E-04	2.84E-04	5.02E-05	5.02E-05	2.79E-04
ULI WALL	G	1.89E-04	4.26E-04	5.90E-04	4.09E-03	7.67E-03	7.57E-04	5.17E-04	4.61E-04	6.91E-05	6.91E-05	2.93E-04
	B	0.0	0.0	0.0	0.0	5.67E-02	0.0	0.0	0.0	0.0	0.0	0.0
	T	1.89E-04	4.26E-04	5.90E-04	4.09E-03	6.44E-02	7.57E-04	5.17E-04	4.61E-04	6.91E-05	6.91E-05	2.93E-04
LLI WALL	G	6.39E-05	1.27E-03	2.28E-04	1.21E-03	5.38E-04	9.25E-03	1.58E-04	5.84E-05	1.41E-05	1.41E-05	3.05E-04
	B	0.0	0.0	0.0	0.0	0.0	9.25E-02	0.0	0.0	0.0	0.0	0.0
	T	6.39E-05	1.27E-03	2.28E-04	1.21E-03	5.38E-04	1.02E-01	1.58E-04	5.84E-05	1.41E-05	1.41E-05	3.05E-04
KIDNEYS	G	2.06E-03	6.95E-05	5.90E-04	5.70E-04	4.87E-04	1.49E-04	1.32E-02	6.76E-04	1.88E-04	1.88E-04	2.58E-04
	B	0.0	0.0	0.0	0.0	0.0	0.0	8.05E-02	0.0	0.0	0.0	0.0
	T	2.06E-03	6.95E-05	5.90E-04	5.70E-04	4.87E-04	1.49E-04	9.37E-02	6.76E-04	1.88E-04	1.88E-04	2.58E-04
LIVER	G	8.78E-04	5.11E-05	3.66E-04	3.24E-04	4.41E-04	6.25E-05	7.18E-04	4.62E-03	4.27E-04	4.27E-04	2.01E-04
	B	0.0	0.0	0.0	0.0	0.0	0.0	0.0	1.39E-02	0.0	0.0	0.0
	T	8.78E-04	5.11E-05	3.66E-04	3.24E-04	4.41E-04	6.25E-05	7.18E-04	1.85E-02	4.27E-04	4.27E-04	2.01E-04
LUNGS	G	4.17E-04	8.79E-06	3.34E-04	6.05E-05	6.15E-05	1.85E-05	1.71E-04	4.30E-04	2.61E-03	2.61E-03	2.41E-04
	B	0.0	0.0	0.0	0.0	0.0	0.0	0.0	0.0	2.50E-02	2.50E-02	0.0
	T	4.17E-04	8.79E-06	3.34E-04	6.05E-05	6.15E-05	1.85E-05	1.71E-04	4.30E-04	2.76E-02	2.76E-02	2.41E-04
RESP LYM NODE	G	4.17E-04	8.79E-06	3.34E-04	6.05E-05	6.15E-05	1.85E-05	1.71E-04	4.30E-04	2.61E-03	2.61E-03	2.41E-04
	B	0.0	0.0	0.0	0.0	0.0	0.0	0.0	0.0	2.50E-02	1.66E 00	0.0
	T	4.17E-04	8.79E-06	3.34E-04	6.05E-05	6.15E-05	1.85E-05	1.71E-04	4.30E-04	2.76E-02	1.67E 00	2.41E-04
MUSCLE*	G	2.75E-04	3.20E-04	2.53E-04	2.79E-04	2.66E-04	3.05E-04	2.58E-04	2.01E-04	2.41E-04	2.41E-04	2.72E-04
	B	0.0	0.0	0.0	0.0	0.0	0.0	0.0	0.0	0.0	0.0	8.92E-04
	T	2.75E-04	3.20E-04	2.53E-04	2.79E-04	2.66E-04	3.05E-04	2.58E-04	2.01E-04	2.41E-04	2.41E-04	1.16E-03
OVARIES	G	9.82E-05	1.12E-03	9.27E-05	1.57E-03	2.27E-03	2.83E-03	2.08E-04	3.63E-05	2.76E-05	2.76E-05	3.57E-04
	B	0.0	0.0	0.0	0.0	0.0	0.0	0.0	0.0	0.0	0.0	0.0
	T	9.82E-05	1.12E-03	9.27E-05	1.57E-03	2.27E-03	2.83E-03	2.08E-04	3.63E-05	2.76E-05	2.76E-05	3.57E-04

7-NITROGEN-13 CONTINUED

SOURCE ORGANS

TARGET ORGANS		ADRENALS	BLAD CON	S CONT	SI+CONT	ULI CONT	LLI CONT	KIDNEYS	LIVER	LUNG	RESP LYM NODE	MUSCLE*
PANCREAS	G	1.51E-03	4.68E-05	3.14E-03	3.74E-04	3.20E-04	1.35E-04	1.18E-03	8.63E-04	5.00E-04	5.00E-04	3.24E-04
	B	0.0	0.0	0.0	0.0	0.0	0.0	0.0	0.0	0.0	0.0	0.0
	T	1.51E-03	4.68E-05	3.14E-03	3.74E-04	3.20E-04	1.35E-04	1.18E-03	8.63E-04	5.00E-04	5.00E-04	3.24E-04
SKELETON BONE	G	2.45E-04	1.06E-04	1.09E-04	1.41E-04	1.30E-04	1.87E-04	1.77E-04	1.32E-04	1.80E-04	1.80E-04	1.99E-04
	B	0.0	0.0	0.0	0.0	0.0	0.0	0.0	0.0	0.0	0.0	0.0
	T	2.45E-04	1.06E-04	1.09E-04	1.41E-04	1.30E-04	1.87E-04	1.77E-04	1.32E-04	1.80E-04	1.80E-04	1.99E-04
R MARROW	G	4.40E-04	2.26E-04	1.88E-04	4.47E-04	3.88E-04	5.61E-04	4.48E-04	1.94E-04	2.27E-04	2.27E-04	2.48E-04
	B	0.0	0.0	0.0	0.0	0.0	0.0	0.0	0.0	0.0	0.0	0.0
	T	4.40E-04	2.26E-04	1.88E-04	4.47E-04	3.88E-04	5.61E-04	4.48E-04	1.94E-04	2.27E-04	2.27E-04	2.48E-04
Y MARROW	G	2.37E-04	9.67E-05	1.51E-04	1.95E-04	1.84E-04	2.32E-04	2.20E-04	1.93E-04	1.90E-04	1.90E-04	2.02E-04
	B	0.0	0.0	0.0	0.0	0.0	0.0	0.0	0.0	0.0	0.0	0.0
	T	2.37E-04	9.67E-05	1.51E-04	1.95E-04	1.84E-04	2.32E-04	2.20E-04	1.93E-04	1.90E-04	1.90E-04	2.02E-04
T E CL	G	2.45E-04	1.06E-04	1.09E-04	1.41E-04	1.30E-04	1.87E-04	1.77E-04	1.32E-04	1.80E-04	1.80E-04	1.99E-04
	B	0.0	0.0	0.0	0.0	0.0	0.0	0.0	0.0	0.0	0.0	0.0
	T	2.45E-04	1.06E-04	1.09E-04	1.41E-04	1.30E-04	1.87E-04	1.77E-04	1.32E-04	1.80E-04	1.80E-04	1.99E-04
SKIN	G	1.23E-04	1.17E-04	1.07E-04	9.58E-05	1.00E-04	1.06E-04	1.20E-04	1.09E-04	1.23E-04	1.23E-04	1.64E-04
	B	0.0	0.0	0.0	0.0	0.0	0.0	0.0	0.0	0.0	0.0	0.0
	T	1.23E-04	1.17E-04	1.07E-04	9.58E-05	1.00E-04	1.06E-04	1.20E-04	1.09E-04	1.23E-04	1.23E-04	1.64E-04
SPLEEN	G	1.16E-03	4.09E-05	1.70E-03	2.82E-04	2.21E-04	1.70E-04	1.49E-03	1.80E-04	3.82E-04	3.82E-04	2.65E-04
	B	0.0	0.0	0.0	0.0	0.0	0.0	0.0	0.0	0.0	0.0	0.0
	T	1.16E-03	4.09E-05	1.70E-03	2.82E-04	2.21E-04	1.70E-04	1.49E-03	1.80E-04	3.82E-04	3.82E-04	2.65E-04
TESTES	G	1.28E-05	9.15E-04	4.78E-06	6.56E-05	9.30E-05	3.71E-04	2.72E-05	2.10E-05	4.45E-06	4.45E-06	2.23E-04
	B	0.0	0.0	0.0	0.0	0.0	0.0	0.0	0.0	0.0	0.0	0.0
	T	1.28E-05	9.15E-04	4.78E-06	6.56E-05	9.30E-05	3.71E-04	2.72E-05	2.10E-05	4.45E-06	4.45E-06	2.23E-04
THYMUS	G	1.71E-04	5.79E-06	4.32E-05	2.52E-05	2.76E-05	1.06E-05	7.25E-05	2.40E-04	6.58E-04	6.58E-04	3.00E-04
	B	0.0	0.0	0.0	0.0	0.0	0.0	0.0	0.0	0.0	0.0	0.0
	T	1.71E-04	5.79E-06	4.32E-05	2.52E-05	2.76E-05	1.06E-05	7.25E-05	2.40E-04	6.58E-04	6.58E-04	3.00E-04
THYROID	G	3.58E-05	1.74E-06	2.76E-05	7.26E-06	7.77E-06	3.31E-06	1.72E-05	3.31E-05	2.18E-04	2.18E-04	2.48E-04
	B	0.0	0.0	0.0	0.0	0.0	0.0	0.0	0.0	0.0	0.0	0.0
	T	3.58E-05	1.74E-06	2.76E-05	7.26E-06	7.77E-06	3.31E-06	1.72E-05	3.31E-05	2.18E-04	2.18E-04	2.48E-04
UTERUS	G	6.77E-05	2.67E-03	1.61E-04	1.56E-03	8.02E-04	9.98E-04	1.50E-04	7.90E-05	1.73E-05	1.73E-05	3.40E-04
	B	0.0	0.0	0.0	0.0	0.0	0.0	0.0	0.0	0.0	0.0	0.0
	T	6.77E-05	2.67E-03	1.61E-04	1.56E-03	8.02E-04	9.98E-04	1.50E-04	7.90E-05	1.73E-05	1.73E-05	3.40E-04
T BODY	G	3.02E-04	3.36E-04	3.19E-04	3.52E-04	3.43E-04	3.41E-04	3.05E-04	3.06E-04	2.61E-04	2.61E-04	2.59E-04
	B	3.57E-04	4.01E-05	1.07E-04	2.85E-04	1.70E-04	2.11E-04	3.57E-04	3.57E-04	3.57E-04	3.57E-04	3.57E-04
	T	6.59E-04	3.76E-04	4.26E-04	6.37E-04	5.13E-04	5.52E-04	6.61E-04	6.63E-04	6.17E-04	6.17E-04	6.16E-04

CONTINUED NEXT PAGE

7-NITROGEN-13 CONTINUED

TARGET ORGANS		SOURCE ORGANS										
		OVARIES	PANCREAS	COR BONE	CAN BONE	R MARROW	Y MARROW	SKIN	SPLEEN	TESTES	THYROID	T BODY
ADRENALS	G	1.10E-04	1.52E-03	3.06E-04	3.06E-04	3.11E-04	1.92E-04	1.19E-04	1.08E-03	1.28E-05	3.58E-05	4.13E-04
	B	0.0	0.0	0.0	0.0	0.0	0.0	0.0	0.0	0.0	0.0	3.57E-04
	T	1.10E-04	1.52E-03	3.06E-04	3.06E-04	3.11E-04	1.92E-04	1.19E-04	1.08E-03	1.28E-05	3.58E-05	7.69E-04
BLAD WALL	G	1.20E-03	3.53E-05	1.18E-04	1.18E-04	1.23E-04	4.64E-05	1.13E-04	2.46E-05	9.15E-04	1.75E-06	3.27E-04
	B	0.0	0.0	0.0	0.0	0.0	0.0	0.0	0.0	0.0	0.0	3.57E-04
	T	1.20E-03	3.53E-05	1.18E-04	1.18E-04	1.23E-04	4.64E-05	1.13E-04	2.46E-05	9.15E-04	1.75E-06	6.83E-04
GI TRACT S WALL	G	1.51E-04	3.05E-03	1.06E-04	1.06E-04	1.79E-04	1.34E-04	1.17E-04	1.76E-03	2.11E-05	2.32E-05	3.20E-04
	B	0.0	0.0	0.0	0.0	0.0	0.0	0.0	0.0	0.0	0.0	3.57E-04
	T	1.51E-04	3.05E-03	1.06E-04	1.06E-04	1.79E-04	1.34E-04	1.17E-04	1.76E-03	2.11E-05	2.32E-05	6.77E-04
SI+CONT	G	2.12E-03	3.17E-04	1.45E-04	1.45E-04	4.84E-04	1.90E-04	9.96E-05	2.49E-04	9.67E-05	1.42E-06	3.56E-04
	B	0.0	0.0	0.0	0.0	0.0	0.0	0.0	0.0	0.0	0.0	3.57E-04
	T	2.12E-03	3.17E-04	1.45E-04	1.45E-04	4.84E-04	1.90E-04	9.96E-05	2.49E-04	9.67E-05	1.42E-06	7.12E-04
ULI WALL	G	1.99E-03	3.88E-04	1.26E-04	1.26E-04	3.72E-04	1.54E-04	1.05E-04	2.51E-04	5.80E-05	2.03E-06	3.52E-04
	B	0.0	0.0	0.0	0.0	0.0	0.0	0.0	0.0	0.0	0.0	3.57E-04
	T	1.99E-03	3.88E-04	1.26E-04	1.26E-04	3.72E-04	1.54E-04	1.05E-04	2.51E-04	5.80E-05	2.03E-06	7.09E-04
LLI WALL	G	2.54E-03	9.61E-05	1.70E-04	1.70E-04	5.54E-04	1.48E-04	1.09E-04	1.26E-04	5.11E-04	2.76E-06	3.56E-04
	B	0.0	0.0	0.0	0.0	0.0	0.0	0.0	0.0	0.0	0.0	3.57E-04
	T	2.54E-03	9.61E-05	1.70E-04	1.70E-04	5.54E-04	1.48E-04	1.09E-04	1.26E-04	5.11E-04	2.76E-06	7.13E-04
KIDNEYS	G	2.05E-04	1.11E-03	1.64E-04	1.64E-04	4.27E-04	2.19E-04	1.36E-04	1.53E-03	1.85E-05	9.12E-06	3.17E-04
	B	0.0	0.0	0.0	0.0	0.0	0.0	0.0	0.0	0.0	0.0	3.57E-04
	T	2.05E-04	1.11E-03	1.64E-04	1.64E-04	4.27E-04	2.19E-04	1.36E-04	1.53E-03	1.85E-05	9.12E-06	6.73E-04
LIVER	G	1.10E-04	7.37E-04	1.27E-04	1.27E-04	1.84E-04	1.97E-04	1.22E-04	1.93E-04	9.47E-06	2.88E-05	3.13E-04
	B	0.0	0.0	0.0	0.0	0.0	0.0	0.0	0.0	0.0	0.0	3.57E-04
	T	1.10E-04	7.37E-04	1.27E-04	1.27E-04	1.84E-04	1.97E-04	1.22E-04	1.93E-04	9.47E-06	2.88E-05	6.70E-04
LUNGS	G	2.05E-05	4.28E-04	1.77E-04	1.77E-04	2.16E-04	1.80E-04	1.23E-04	3.95E-04	2.64E-06	1.92E-04	2.79E-04
	B	0.0	0.0	0.0	0.0	0.0	0.0	0.0	0.0	0.0	0.0	3.57E-04
	T	2.05E-05	4.28E-04	1.77E-04	1.77E-04	2.16E-04	1.80E-04	1.23E-04	3.95E-04	2.64E-06	1.92E-04	6.36E-04
RESP LYM NODE	G	2.05E-05	4.28E-04	1.77E-04	1.77E-04	2.16E-04	1.80E-04	1.23E-04	3.95E-04	2.64E-06	1.92E-04	2.79E-04
	B	0.0	0.0	0.0	0.0	0.0	0.0	0.0	0.0	0.0	0.0	3.57E-04
	T	2.05E-05	4.28E-04	1.77E-04	1.77E-04	2.16E-04	1.80E-04	1.23E-04	3.95E-04	2.64E-06	1.92E-04	6.36E-04
MUSCLE*	G	3.57E-04	3.24E-04	1.99E-04	1.99E-04	2.35E-04	1.86E-04	1.64E-04	2.65E-04	2.23E-04	2.48E-04	2.59E-04
	B	0.0	0.0	0.0	0.0	0.0	0.0	0.0	0.0	0.0	0.0	3.57E-04
	T	3.57E-04	3.24E-04	1.99E-04	1.99E-04	2.35E-04	1.86E-04	1.64E-04	2.65E-04	2.23E-04	2.48E-04	6.16E-04
OVARIES	G	1.37E-01	6.96E-05	1.95E-04	1.95E-04	6.48E-04	1.52E-04	5.46E-05	1.91E-04	0.0	3.29E-06	3.03E-04
	B	2.27E 00	0.0	0.0	0.0	0.0	0.0	0.0	0.0	0.0	0.0	3.57E-04
	T	2.41E 00	6.96E-05	1.95E-04	1.95E-04	6.48E-04	1.52E-04	5.46E-05	1.91E-04	0.0	3.29E-06	6.60E-04

7-NITROGEN-13 CONTINUED

TARGET ORGANS		SOURCE ORGANS										
		OVARIES	PANCREAS	COR BONE	CAN BONE	R MARROW	Y MARROW	SKIN	SPLEEN	TESTES	THYROID	T BODY
PANCREAS	G	1.01E-04	3.80E-02	1.63E-04	1.63E-04	3.08E-04	2.37E-04	1.05E-04	3.49E-03	6.97E-06	1.22E-05	3.10E-04
	B	0.0	2.50E-01	0.0	0.0	0.0	0.0	0.0	0.0	0.0	0.0	3.57E-04
	T	1.01E-04	2.88E-01	1.63E-04	1.63E-04	3.08E-04	2.37E-04	1.05E-04	3.49E-03	6.97E-06	1.22E-05	6.67E-04
SKELETON BONE	G	1.66E-04	1.65E-04	6.23E-04	6.23E-04	4.17E-04	4.62E-04	1.53E-04	1.38E-04	1.19E-04	1.36E-04	2.69E-04
	B	0.0	0.0	4.99E-03	2.98E-03	1.34E-03	0.0	0.0	0.0	0.0	0.0	3.57E-04
	T	1.66E-04	1.65E-04	5.62E-03	3.60E-03	1.76E-03	4.62E-04	1.53E-04	1.38E-04	1.19E-04	1.36E-04	6.26E-04
R MARROW	G	5.53E-04	3.12E-04	5.55E-04	5.55E-04	1.34E-03	4.80E-04	1.42E-04	2.04E-04	9.47E-05	1.51E-04	2.96E-04
	B	0.0	0.0	2.25E-04	6.71E-03	1.22E-02	0.0	0.0	0.0	0.0	0.0	3.57E-04
	T	5.53E-04	3.12E-04	7.79E-04	7.27E-03	1.35E-02	4.80E-04	1.42E-04	2.04E-04	9.47E-05	1.51E-04	6.53E-04
Y MARROW	G	2.22E-04	1.94E-04	5.37E-04	5.37E-04	5.14E-04	7.84E-04	1.62E-04	2.08E-04	5.12E-05	7.22E-05	2.51E-04
	B	0.0	0.0	0.0	0.0	0.0	1.66E-02	0.0	0.0	0.0	0.0	3.57E-04
	T	2.22E-04	1.94E-04	5.37E-04	5.37E-04	5.14E-04	1.74E-02	1.62E-04	2.08E-04	5.12E-05	7.22E-05	6.08E-04
T E CL	G	1.66E-04	1.65E-04	6.23E-04	6.23E-04	5.63E-04	5.11E-04	1.53E-04	1.38E-04	1.19E-04	1.36E-04	2.69E-04
	B	0.0	0.0	3.21E-03	5.25E-03	4.82E-03	4.16E-03	0.0	0.0	0.0	0.0	3.57E-04
	T	1.66E-04	1.65E-04	3.83E-03	5.87E-03	5.39E-03	4.67E-03	1.53E-04	1.38E-04	1.19E-04	1.36E-04	6.26E-04
SKIN	G	9.49E-05	9.13E-05	1.57E-04	1.57E-04	1.35E-04	1.75E-04	3.63E-04	1.14E-04	2.86E-04	1.55E-04	1.62E-04
	B	0.0	0.0	0.0	0.0	0.0	0.0	9.60E-03	0.0	0.0	0.0	3.57E-04
	T	9.49E-05	9.13E-05	1.57E-04	1.57E-04	1.35E-04	1.75E-04	9.96E-03	1.14E-04	2.86E-04	1.55E-04	5.18E-04
SPLEEN	G	1.25E-04	3.44E-03	1.52E-04	1.52E-04	1.45E-04	1.76E-04	1.19E-04	2.35E-02	2.35E-05	2.33E-05	3.21E-04
	B	0.0	0.0	0.0	0.0	0.0	0.0	0.0	1.39E-01	0.0	0.0	3.57E-04
	T	1.25E-04	3.44E-03	1.52E-04	1.52E-04	1.45E-04	1.76E-04	1.19E-04	1.62E-01	2.35E-05	2.33E-05	6.78E-04
TESTES	G	0.0	1.15E-05	1.04E-04	1.04E-04	7.80E-05	1.75E-04	1.50E-04	1.73E-05	6.42E-02	6.24E-07	3.39E-04
	B	0.0	0.0	0.0	0.0	0.0	0.0	0.0	0.0	7.13E-01	0.0	3.57E-04
	T	0.0	1.15E-05	1.04E-04	1.04E-04	7.80E-05	1.75E-04	1.50E-04	1.73E-05	7.77E-01	6.24E-07	6.95E-04
THYMUS	G	1.11E-05	9.57E-05	1.38E-04	1.38E-04	8.09E-05	6.58E-05	1.56E-04	8.71E-05	2.03E-06	7.92E-04	2.72E-04
	B	0.0	0.0	0.0	0.0	0.0	0.0	0.0	0.0	0.0	0.0	3.57E-04
	T	1.11E-05	9.57E-05	1.38E-04	1.38E-04	8.09E-05	6.58E-05	1.56E-04	8.71E-05	2.03E-06	7.92E-04	6.28E-04
THYROID	G	3.29E-06	3.33E-05	1.99E-04	1.99E-04	1.63E-04	7.93E-05	1.51E-04	2.68E-05	6.24E-07	8.64E-02	2.59E-04
	B	0.0	0.0	0.0	0.0	0.0	0.0	0.0	0.0	0.0	1.25E 00	3.57E-04
	T	3.29E-06	3.33E-05	1.99E-04	1.99E-04	1.63E-04	7.93E-05	1.51E-04	2.68E-05	6.24E-07	1.33E 00	6.15E-04
UTERUS	G	3.22E-03	1.13E-04	1.04E-04	1.04E-04	3.43E-04	1.20E-04	1.03E-04	8.47E-05	0.0	3.12E-06	3.14E-04
	B	0.0	0.0	0.0	0.0	0.0	0.0	0.0	0.0	0.0	0.0	3.57E-04
	T	3.22E-03	1.13E-04	1.04E-04	1.04E-04	3.43E-04	1.20E-04	1.03E-04	8.47E-05	0.0	3.12E-06	6.71E-04
T BODY	G	3.59E-04	3.52E-04	2.57E-04	2.57E-04	2.87E-04	2.31E-04	1.65E-04	3.04E-04	2.57E-04	2.35E-04	2.60E-04
	B	3.57E-04	3.57E-04	3.57E-04	3.57E-04	3.57E-04	3.57E-04	3.57E-04	3.57E-04	3.57E-04	3.57E-04	3.57E-04
	T	7.16E-04	7.09E-04	6.14E-04	6.14E-04	6.43E-04	5.88E-04	5.21E-04	6.61E-04	6.13E-04	5.92E-04	6.16E-04

*"MUSCLE" VALUES MAY BE USED FOR "SEPARABLE FAT" WITH ADJUSTMENT (SEE TEXT)
PRINCIPLE REFERENCE-LEDERER, C. M. ET AL., TABLE OF ISOTOPES, 6TH ED.
DATE DECAY DATA REVIEWED-FEBRUARY 1972

S, AVERAGE DOSE EQUIVALENT PER UNIT ACCUMULATED ACTIVITY (REM/UCI-DAY), FOR 8-OXYGEN-15 (TR=1.240E 02 SEC)

DATE OF TABLE 11-27-74

TARGET ORGANS		SOURCE ORGANS										
		ADRENALS	BLAD CON	S CONT	SI+CONT	ULI CONT	LLI CONT	KIDNEYS	LIVER	LUNG	RESP LYM NODE	MUSCLE*
ADRENALS	G	8.22E-02	4.17E-05	3.80E-04	2.22E-04	1.81E-04	8.90E-05	2.23E-03	8.76E-04	4.38E-04	4.38E-04	2.75E-04
	B	2.63E 00	0.0	0.0	0.0	0.0	0.0	0.0	0.0	0.0	0.0	0.0
	T	2.72E 00	4.17E-05	3.80E-04	2.22E-04	1.81E-04	8.90E-05	2.23E-03	8.76E-04	4.38E-04	4.38E-04	2.75E-04
BLAD WALL	G	1.98E-05	1.33E-02	8.26E-05	6.10E-04	3.42E-04	1.01E-03	6.91E-05	6.23E-05	1.34E-05	1.34E-05	3.20E-04
	B	0.0	9.21E-02	0.0	0.0	0.0	0.0	0.0	0.0	0.0	0.0	0.0
	T	1.98E-05	1.05E-01	8.26E-05	6.10E-04	3.42E-04	1.01E-03	6.91E-05	6.23E-05	1.34E-05	1.34E-05	3.20E-04
GI TRACT S WALL	G	5.30E-04	5.85E-05	9.34E-03	6.08E-04	6.49E-04	3.24E-04	6.03E-04	3.40E-04	3.30E-04	3.30E-04	2.53E-04
	B	0.0	0.0	7.37E-02	0.0	0.0	0.0	0.0	0.0	0.0	0.0	0.0
	T	5.30E-04	5.85E-05	8.31E-02	6.08E-04	6.49E-04	3.24E-04	6.03E-04	3.40E-04	3.30E-04	3.30E-04	2.53E-04
SI+CONT	G	1.73E-04	4.69E-04	4.74E-04	5.57E-03	2.93E-03	1.60E-03	4.92E-04	2.84E-04	5.02E-05	5.02E-05	2.79E-04
	B	0.0	0.0	0.0	4.61E-02	0.0	0.0	0.0	0.0	0.0	0.0	0.0
	T	1.73E-04	4.69E-04	4.74E-04	5.16E-02	2.93E-03	1.60E-03	4.92E-04	2.84E-04	5.02E-05	5.02E-05	2.79E-04
ULI WALL	G	1.89E-04	4.26E-04	5.90E-04	4.09E-03	7.67E-03	7.57E-04	5.17E-04	4.61E-04	6.91E-05	6.91E-05	2.93E-04
	B	0.0	0.0	0.0	0.0	8.38E-02	0.0	0.0	0.0	0.0	0.0	0.0
	T	1.89E-04	4.26E-04	5.90E-04	4.09E-03	9.14E-02	7.57E-04	5.17E-04	4.61E-04	6.91E-05	6.91E-05	2.93E-04
LLI WALL	G	6.39E-05	1.27E-03	2.28E-04	1.21E-03	5.38E-04	9.25E-03	1.58E-04	5.84E-05	1.41E-05	1.41E-05	3.05E-04
	B	0.0	0.0	0.0	0.0	0.0	1.37E-01	0.0	0.0	0.0	0.0	0.0
	T	6.39E-05	1.27E-03	2.28E-04	1.21E-03	5.38E-04	1.46E-01	1.58E-04	5.84E-05	1.41E-05	1.41E-05	3.05E-04
KIDNEYS	G	2.06E-03	6.95E-05	5.90E-04	5.70E-04	4.87E-04	1.49E-04	1.32E-02	6.76E-04	1.88E-04	1.88E-04	2.58E-04
	B	0.0	0.0	0.0	0.0	0.0	0.0	1.19E-01	0.0	0.0	0.0	0.0
	T	2.06E-03	6.95E-05	5.90E-04	5.70E-04	4.87E-04	1.49E-04	1.32E-01	6.76E-04	1.88E-04	1.88E-04	2.58E-04
LIVER	G	8.78E-04	5.11E-05	3.66E-04	3.24E-04	4.41E-04	6.25E-05	7.18E-04	4.62E-03	4.27E-04	4.27E-04	2.01E-04
	B	0.0	0.0	0.0	0.0	0.0	0.0	0.0	2.05E-02	0.0	0.0	0.0
	T	8.78E-04	5.11E-05	3.66E-04	3.24E-04	4.41E-04	6.25E-05	7.18E-04	2.51E-02	4.27E-04	4.27E-04	2.01E-04
LUNGS	G	4.17E-04	8.79E-06	3.34E-04	6.05E-05	6.15E-05	1.85E-05	1.71E-04	4.30E-04	2.61E-03	2.61E-03	2.41E-04
	B	0.0	0.0	0.0	0.0	0.0	0.0	0.0	0.0	3.69E-02	3.69E-02	0.0
	T	4.17E-04	8.79E-06	3.34E-04	6.05E-05	6.15E-05	1.85E-05	1.71E-04	4.30E-04	3.95E-02	3.95E-02	2.41E-04
RESP LYM NODE	G	4.17E-04	8.79E-06	3.34E-04	6.05E-05	6.15E-05	1.85E-05	1.71E-04	4.30E-04	2.61E-03	2.61E-03	2.41E-04
	B	0.0	0.0	0.0	0.0	0.0	0.0	0.0	0.0	3.69E-02	2.46E 00	0.0
	T	4.17E-04	8.79E-06	3.34E-04	6.05E-05	6.15E-05	1.85E-05	1.71E-04	4.30E-04	3.95E-02	2.46E 00	2.41E-04
MUSCLE*	G	2.75E-04	3.20E-04	2.53E-04	2.79E-04	2.66E-04	3.05E-04	2.58E-04	2.01E-04	2.41E-04	2.41E-04	2.72E-04
	B	0.0	0.0	0.0	0.0	0.0	0.0	0.0	0.0	0.0	0.0	1.32E-03
	T	2.75E-04	3.20E-04	2.53E-04	2.79E-04	2.66E-04	3.05E-04	2.58E-04	2.01E-04	2.41E-04	2.41E-04	1.59E-03
OVARIES	G	9.82E-05	1.12E-03	9.27E-05	1.57E-03	2.27E-03	2.83E-03	2.08E-04	3.63E-05	2.76E-05	2.76E-05	3.57E-04
	B	0.0	0.0	0.0	0.0	0.0	0.0	0.0	0.0	0.0	0.0	0.0
	T	9.82E-05	1.12E-03	9.27E-05	1.57E-03	2.27E-03	2.83E-03	2.08E-04	3.63E-05	2.76E-05	2.76E-05	3.57E-04

8-OXYGEN-15 CONTINUED

SOURCE ORGANS

TARGET ORGANS		ADRENALS	BLAD CON	S CONT	SI+CONT	ULI CONT	LLI CONT	KIDNEYS	LIVER	LUNG	RESP LYM NODE	MUSCLE*
PANCREAS	G	1.51E-03	4.68E-05	3.14E-03	3.74E-04	3.20E-04	1.35E-04	1.18E-03	8.63E-04	5.00E-04	5.00E-04	3.24E-04
	B	0.0	0.0	0.0	0.0	0.0	0.0	0.0	0.0	0.0	0.0	0.0
	T	1.51E-03	4.68E-05	3.14E-03	3.74E-04	3.20E-04	1.35E-04	1.18E-03	8.63E-04	5.00E-04	5.00E-04	3.24E-04
SKELETON BONE	G	2.45E-04	1.06E-04	1.09E-04	1.41E-04	1.30E-04	1.87E-04	1.77E-04	1.32E-04	1.80E-04	1.80E-04	1.99E-04
	B	0.0	0.0	0.0	0.0	0.0	0.0	0.0	0.0	0.0	0.0	0.0
	T	2.45E-04	1.06E-04	1.09E-04	1.41E-04	1.30E-04	1.87E-04	1.77E-04	1.32E-04	1.80E-04	1.80E-04	1.99E-04
R MARROW	G	4.40E-04	2.26E-04	1.88E-04	4.47E-04	3.88E-04	5.61E-04	4.48E-04	1.94E-04	2.27E-04	2.27E-04	2.48E-04
	B	0.0	0.0	0.0	0.0	0.0	0.0	0.0	0.0	0.0	0.0	0.0
	T	4.40E-04	2.26E-04	1.88E-04	4.47E-04	3.88E-04	5.61E-04	4.48E-04	1.94E-04	2.27E-04	2.27E-04	2.48E-04
Y MARROW	G	2.37E-04	9.67E-05	1.51E-04	1.95E-04	1.84E-04	2.32E-04	2.20E-04	1.93E-04	1.90E-04	1.90E-04	2.02E-04
	B	0.0	0.0	0.0	0.0	0.0	0.0	0.0	0.0	0.0	0.0	0.0
	T	2.37E-04	9.67E-05	1.51E-04	1.95E-04	1.84E-04	2.32E-04	2.20E-04	1.93E-04	1.90E-04	1.90E-04	2.02E-04
T E CL	G	2.45E-04	1.06E-04	1.09E-04	1.41E-04	1.30E-04	1.87E-04	1.77E-04	1.32E-04	1.80E-04	1.80E-04	1.99E-04
	B	0.0	0.0	0.0	0.0	0.0	0.0	0.0	0.0	0.0	0.0	0.0
	T	2.45E-04	1.06E-04	1.09E-04	1.41E-04	1.30E-04	1.87E-04	1.77E-04	1.32E-04	1.80E-04	1.80E-04	1.99E-04
SKIN	G	1.23E-04	1.17E-04	1.07E-04	9.58E-05	1.00E-04	1.06E-04	1.20E-04	1.09E-04	1.23E-04	1.23E-04	1.64E-04
	B	0.0	0.0	0.0	0.0	0.0	0.0	0.0	0.0	0.0	0.0	0.0
	T	1.23E-04	1.17E-04	1.07E-04	9.58E-05	1.00E-04	1.06E-04	1.20E-04	1.09E-04	1.23E-04	1.23E-04	1.64E-04
SPLEEN	G	1.16E-03	4.09E-05	1.70E-03	2.82E-04	2.21E-04	1.70E-04	1.49E-03	1.80E-04	3.82E-04	3.82E-04	2.65E-04
	B	0.0	0.0	0.0	0.0	0.0	0.0	0.0	0.0	0.0	0.0	0.0
	T	1.16E-03	4.09E-05	1.70E-03	2.82E-04	2.21E-04	1.70E-04	1.49E-03	1.80E-04	3.82E-04	3.82E-04	2.65E-04
TESTES	G	1.28E-05	9.15E-04	4.78E-06	6.56E-05	9.30E-05	3.71E-04	2.72E-05	2.10E-05	4.45E-06	4.45E-06	2.23E-04
	B	0.0	0.0	0.0	0.0	0.0	0.0	0.0	0.0	0.0	0.0	0.0
	T	1.28E-05	9.15E-04	4.78E-06	6.56E-05	9.30E-05	3.71E-04	2.72E-05	2.10E-05	4.45E-06	4.45E-06	2.23E-04
THYMUS	G	1.71E-04	5.79E-06	4.32E-05	2.52E-05	2.76E-05	1.06E-05	7.25E-05	2.40E-04	6.58E-04	6.58E-04	3.00E-04
	B	0.0	0.0	0.0	0.0	0.0	0.0	0.0	0.0	0.0	0.0	0.0
	T	1.71E-04	5.79E-06	4.32E-05	2.52E-05	2.76E-05	1.06E-05	7.25E-05	2.40E-04	6.58E-04	6.58E-04	3.00E-04
THYROID	G	3.58E-05	1.74E-06	2.76E-05	7.26E-06	7.77E-06	3.31E-06	1.72E-05	3.31E-05	2.18E-04	2.18E-04	2.48E-04
	B	0.0	0.0	0.0	0.0	0.0	0.0	0.0	0.0	0.0	0.0	0.0
	T	3.58E-05	1.74E-06	2.76E-05	7.26E-06	7.77E-06	3.31E-06	1.72E-05	3.31E-05	2.18E-04	2.18E-04	2.48E-04
UTERUS	G	6.77E-05	2.67E-03	1.61E-04	1.56E-03	8.02E-04	9.98E-04	1.50E-04	7.90E-05	1.73E-05	1.73E-05	3.40E-04
	B	0.0	0.0	0.0	0.0	0.0	0.0	0.0	0.0	0.0	0.0	0.0
	T	6.77E-05	2.67E-03	1.61E-04	1.56E-03	8.02E-04	9.98E-04	1.50E-04	7.90E-05	1.73E-05	1.73E-05	3.40E-04
T BODY	G	3.02E-04	3.36E-04	3.19E-04	3.52E-04	3.43E-04	3.41E-04	3.05E-04	3.06E-04	2.61E-04	2.61E-04	2.59E-04
	B	5.27E-04	5.92E-05	1.58E-04	4.21E-04	2.51E-04	3.12E-04	5.27E-04	5.27E-04	5.27E-04	5.27E-04	5.27E-04
	T	8.29E-04	3.95E-04	4.77E-04	7.73E-04	5.94E-04	6.53E-04	8.31E-04	8.32E-04	7.87E-04	7.87E-04	7.86E-04

CONTINUED NEXT PAGE

8-OXYGEN-15 CONTINUED

SOURCE ORGANS

TARGET ORGANS		OVARIES	PANCREAS	COR BONE	CAN BONE	R MARROW	Y MARROW	SKIN	SPLEEN	TESTES	THYROID	T BODY
ADRENALS	G	1.10E-04	1.52E-03	3.06E-04	3.06E-04	3.11E-04	1.92E-04	1.19E-04	1.08E-03	1.28E-05	3.58E-05	4.13E-04
	B	0.0	0.0	0.0	0.0	0.0	0.0	0.0	0.0	0.0	0.0	5.27E-04
	T	1.10E-04	1.52E-03	3.06E-04	3.06E-04	3.11E-04	1.92E-04	1.19E-04	1.08E-03	1.28E-05	3.58E-05	9.39E-04
BLAD WALL	G	1.20E-03	3.53E-05	1.18E-04	1.18E-04	1.23E-04	4.64E-05	1.13E-04	2.46E-05	9.15E-04	1.75E-06	3.27E-04
	B	0.0	0.0	0.0	0.0	0.0	0.0	0.0	0.0	0.0	0.0	5.27E-04
	T	1.20E-03	3.53E-05	1.18E-04	1.18E-04	1.23E-04	4.64E-05	1.13E-04	2.46E-05	9.15E-04	1.75E-06	8.53E-04
GI TRACT S WALL	G	1.51E-04	3.05E-03	1.06E-04	1.06E-04	1.79E-04	1.34E-04	1.17E-04	1.76E-03	2.11E-05	2.32E-05	3.20E-04
	B	0.0	0.0	0.0	0.0	0.0	0.0	0.0	0.0	0.0	0.0	5.27E-04
	T	1.51E-04	3.05E-03	1.06E-04	1.06E-04	1.79E-04	1.34E-04	1.17E-04	1.76E-03	2.11E-05	2.32E-05	8.47E-04
SI+CONT	G	2.12E-03	3.17E-04	1.45E-04	1.45E-04	4.84E-04	1.90E-04	9.96E-05	2.49E-04	9.67E-05	1.42E-06	3.56E-04
	B	0.0	0.0	0.0	0.0	0.0	0.0	0.0	0.0	0.0	0.0	5.27E-04
	T	2.12E-03	3.17E-04	1.45E-04	1.45E-04	4.84E-04	1.90E-04	9.96E-05	2.49E-04	9.67E-05	1.42E-06	8.82E-04
ULI WALL	G	1.99E-03	3.88E-04	1.26E-04	1.26E-04	3.72E-04	1.54E-04	1.05E-04	2.51E-04	5.80E-05	2.03E-06	3.52E-04
	B	0.0	0.0	0.0	0.0	0.0	0.0	0.0	0.0	0.0	0.0	5.27E-04
	T	1.99E-03	3.88E-04	1.26E-04	1.26E-04	3.72E-04	1.54E-04	1.05E-04	2.51E-04	5.80E-05	2.03E-06	8.79E-04
LLI WALL	G	2.54E-03	9.61E-05	1.70E-04	1.70E-04	5.54E-04	1.48E-04	1.09E-04	1.26E-04	5.11E-04	2.76E-06	3.56E-04
	B	0.0	0.0	0.0	0.0	0.0	0.0	0.0	0.0	0.0	0.0	5.27E-04
	T	2.54E-03	9.61E-05	1.70E-04	1.70E-04	5.54E-04	1.48E-04	1.09E-04	1.26E-04	5.11E-04	2.76E-06	8.83E-04
KIDNEYS	G	2.05E-04	1.11E-03	1.64E-04	1.64E-04	4.27E-04	2.19E-04	1.36E-04	1.53E-03	1.85E-05	9.12E-06	3.17E-04
	B	0.0	0.0	0.0	0.0	0.0	0.0	0.0	0.0	0.0	0.0	5.27E-04
	T	2.05E-04	1.11E-03	1.64E-04	1.64E-04	4.27E-04	2.19E-04	1.36E-04	1.53E-03	1.85E-05	9.12E-06	8.43E-04
LIVER	G	1.10E-04	7.37E-04	1.27E-04	1.27E-04	1.84E-04	1.97E-04	1.22E-04	1.93E-04	9.47E-06	2.88E-05	3.13E-04
	B	0.0	0.0	0.0	0.0	0.0	0.0	0.0	0.0	0.0	0.0	5.27E-04
	T	1.10E-04	7.37E-04	1.27E-04	1.27E-04	1.84E-04	1.97E-04	1.22E-04	1.93E-04	9.47E-06	2.88E-05	8.40E-04
LUNGS	G	2.05E-05	4.28E-04	1.77E-04	1.77E-04	2.16E-04	1.80E-04	1.23E-04	3.95E-04	2.64E-06	1.92E-04	2.79E-04
	B	0.0	0.0	0.0	0.0	0.0	0.0	0.0	0.0	0.0	0.0	5.27E-04
	T	2.05E-05	4.28E-04	1.77E-04	1.77E-04	2.16E-04	1.80E-04	1.23E-04	3.95E-04	2.64E-06	1.92E-04	8.06E-04
RESP LYM NODE	G	2.05E-05	4.28E-04	1.77E-04	1.77E-04	2.16E-04	1.80E-04	1.23E-04	3.95E-04	2.64E-06	1.92E-04	2.79E-04
	B	0.0	0.0	0.0	0.0	0.0	0.0	0.0	0.0	0.0	0.0	5.27E-04
	T	2.05E-05	4.28E-04	1.77E-04	1.77E-04	2.16E-04	1.80E-04	1.23E-04	3.95E-04	2.64E-06	1.92E-04	8.06E-04
MUSCLE*	G	3.57E-04	3.24E-04	1.99E-04	1.99E-04	2.35E-04	1.86E-04	1.64E-04	2.65E-04	2.23E-04	2.48E-04	2.59E-04
	B	0.0	0.0	0.0	0.0	0.0	0.0	0.0	0.0	0.0	0.0	5.27E-04
	T	3.57E-04	3.24E-04	1.99E-04	1.99E-04	2.35E-04	1.86E-04	1.64E-04	2.65E-04	2.23E-04	2.48E-04	7.86E-04
OVARIES	G	1.37E-01	6.96E-05	1.95E-04	1.95E-04	6.48E-04	1.52E-04	5.46E-05	1.91E-04	0.0	3.29E-06	3.03E-04
	B	3.35E 00	0.0	0.0	0.0	0.0	0.0	0.0	0.0	0.0	0.0	5.27E-04
	T	3.49E 00	6.96E-05	1.95E-04	1.95E-04	6.48E-04	1.52E-04	5.46E-05	1.91E-04	0.0	3.29E-06	8.30E-04

8-OXYGEN-15 CONTINUED

SOURCE ORGANS

TARGET ORGANS		OVARIES	PANCREAS	COR BONE	CAN BONE	R MARROW	Y MARROW	SKIN	SPLEEN	TESTES	THYROID	T BODY
PANCREAS	G	1.01E-04	3.80E-02	1.63E-04	1.63E-04	3.08E-04	2.37E-04	1.05E-04	3.49E-03	6.97E-06	1.22E-05	3.10E-04
	B	0.0	3.69E-01	0.0	0.0	0.0	0.0	0.0	0.0	0.0	0.0	5.27E-04
	T	1.01E-04	4.07E-01	1.63E-04	1.63E-04	3.08E-04	2.37E-04	1.05E-04	3.49E-03	6.97E-06	1.22E-05	8.37E-04
SKELETON BONE	G	1.66E-04	1.65E-04	6.23E-04	6.23E-04	4.17E-04	4.62E-04	1.53E-04	1.38E-04	1.19E-04	1.36E-04	2.69E-04
	B	0.0	0.0	7.37E-03	4.14E-03	2.16E-03	0.0	0.0	0.0	0.0	0.0	5.27E-04
	T	1.66E-04	1.65E-04	8.00E-03	4.76E-03	2.57E-03	4.62E-04	1.53E-04	1.38E-04	1.19E-04	1.36E-04	7.96E-04
R MARROW	G	5.53E-04	3.12E-04	5.55E-04	5.55E-04	1.34E-03	4.80E-04	1.42E-04	2.04E-04	9.47E-05	1.51E-04	2.96E-04
	B	0.0	0.0	4.99E-04	1.08E-02	1.74E-02	0.0	0.0	0.0	0.0	0.0	5.27E-04
	T	5.53E-04	3.12E-04	1.05E-03	1.13E-02	1.87E-02	4.80E-04	1.42E-04	2.04E-04	9.47E-05	1.51E-04	8.23E-04
Y MARROW	G	2.22E-04	1.94E-04	5.37E-04	5.37E-04	5.14E-04	7.84E-04	1.62E-04	2.08E-04	5.12E-05	7.22E-05	2.51E-04
	B	0.0	0.0	0.0	0.0	0.0	2.46E-02	0.0	0.0	0.0	0.0	5.27E-04
	T	2.22E-04	1.94E-04	5.37E-04	5.37E-04	5.14E-04	2.54E-02	1.62E-04	2.08E-04	5.12E-05	7.22E-05	7.78E-04
T E CL	G	1.66E-04	1.65E-04	6.23E-04	6.23E-04	5.63E-04	5.11E-04	1.53E-04	1.38E-04	1.19E-04	1.36E-04	2.69E-04
	B	0.0	0.0	4.70E-03	7.05E-03	7.59E-03	6.14E-03	0.0	0.0	0.0	0.0	5.27E-04
	T	1.66E-04	1.65E-04	5.32E-03	7.67E-03	8.15E-03	6.65E-03	1.53E-04	1.38E-04	1.19E-04	1.36E-04	7.96E-04
SKIN	G	9.49E-05	9.13E-05	1.57E-04	1.57E-04	1.35E-04	1.75E-04	3.63E-04	1.14E-04	2.86E-04	1.55E-04	1.62E-04
	B	0.0	0.0	0.0	0.0	0.0	0.0	1.42E-02	0.0	0.0	0.0	5.27E-04
	T	9.49E-05	9.13E-05	1.57E-04	1.57E-04	1.35E-04	1.75E-04	1.45E-02	1.14E-04	2.86E-04	1.55E-04	6.88E-04
SPLEEN	G	1.25E-04	3.44E-03	1.52E-04	1.52E-04	1.45E-04	1.76E-04	1.19E-04	2.35E-02	2.35E-05	2.33E-05	3.21E-04
	B	0.0	0.0	0.0	0.0	0.0	0.0	0.0	2.05E-01	0.0	0.0	5.27E-04
	T	1.25E-04	3.44E-03	1.52E-04	1.52E-04	1.45E-04	1.76E-04	1.19E-04	2.28E-01	2.35E-05	2.33E-05	8.48E-04
TESTES	G	0.0	1.15E-05	1.04E-04	1.04E-04	7.80E-05	1.75E-04	1.50E-04	1.73E-05	6.42E-02	6.24E-07	3.39E-04
	B	0.0	0.0	0.0	0.0	0.0	0.0	0.0	0.0	1.05E 00	0.0	5.27E-04
	T	0.0	1.15E-05	1.04E-04	1.04E-04	7.80E-05	1.75E-04	1.50E-04	1.73E-05	1.12E 00	6.24E-07	8.65E-04
THYMUS	G	1.11E-05	9.57E-05	1.38E-04	1.38E-04	8.09E-05	6.58E-05	1.56E-04	8.71E-05	2.03E-06	7.92E-04	2.72E-04
	B	0.0	0.0	0.0	0.0	0.0	0.0	0.0	0.0	0.0	0.0	5.27E-04
	T	1.11E-05	9.57E-05	1.38E-04	1.38E-04	8.09E-05	6.58E-05	1.56E-04	8.71E-05	2.03E-06	7.92E-04	7.98E-04
THYROID	G	3.29E-06	3.33E-05	1.99E-04	1.99E-04	1.63E-04	7.93E-05	1.51E-04	2.68E-05	6.24E-07	8.64E-02	2.59E-04
	B	0.0	0.0	0.0	0.0	0.0	0.0	0.0	0.0	0.0	1.84E 00	5.27E-04
	T	3.29E-06	3.33E-05	1.99E-04	1.99E-04	1.63E-04	7.93E-05	1.51E-04	2.68E-05	6.24E-07	1.93E 00	7.85E-04
UTERUS	G	3.22E-03	1.13E-04	1.04E-04	1.04E-04	3.43E-04	1.20E-04	1.03E-04	8.47E-05	0.0	3.12E-06	3.14E-04
	B	0.0	0.0	0.0	0.0	0.0	0.0	0.0	0.0	0.0	0.0	5.27E-04
	T	3.22E-03	1.13E-04	1.04E-04	1.04E-04	3.43E-04	1.20E-04	1.03E-04	8.47E-05	0.0	3.12E-06	8.41E-04
T BODY	G	3.59E-04	3.52E-04	2.57E-04	2.57E-04	2.87E-04	2.31E-04	1.65E-04	3.04E-04	2.57E-04	2.35E-04	2.60E-04
	B	5.27E-04	5.27E-04	5.27E-04	5.27E-04	5.27E-04	5.27E-04	5.27E-04	5.27E-04	5.27E-04	5.27E-04	5.27E-04
	T	8.86E-04	8.78E-04	7.84E-04	7.84E-04	8.13E-04	7.58E-04	6.91E-04	8.31E-04	7.83E-04	7.62E-04	7.86E-04

*"MUSCLE" VALUES MAY BE USED FOR "SEPARABLE FAT" WITH ADJUSTMENT (SEE TEXT)
PRINCIPLE REFERENCE-LEDERER, C. M., ET AL., TABLE OF ISOTOPES, 6TH ED.
DATE DECAY DATA REVIEWED-FEBRUARY 1972

S, AVERAGE DOSE EQUIVALENT PER UNIT ACCUMULATED ACTIVITY (REM/UCI-DAY), FOR 9-FLUORINE-18 (TR=1.097E 02 MIN)

DATE OF TABLE 11-27-74

TARGET ORGANS		SOURCE ORGANS										
		ADRENALS	BLAD CON	S CONT	SI+CONT	ULI CONT	LLI CONT	KIDNEYS	LIVER	LUNG	RESP LYM NODE	MUSCLE*
ADRENALS	G	7.97E-02	4.04E-05	3.69E-04	2.16E-04	1.76E-04	8.64E-05	2.17E-03	8.50E-04	4.25E-04	4.25E-04	2.67E-04
	B	8.85E-01	0.0	0.0	0.0	0.0	0.0	0.0	0.0	0.0	0.0	0.0
	T	9.65E-01	4.04E-05	3.69E-04	2.16E-04	1.76E-04	8.64E-05	2.17E-03	8.50E-04	4.25E-04	4.25E-04	2.67E-04
BLAD WALL	G	1.92E-05	1.29E-02	8.01E-05	5.91E-04	3.32E-04	9.78E-04	6.70E-05	6.05E-05	1.30E-05	1.30E-05	3.10E-04
	B	0.0	3.10E-02	0.0	0.0	0.0	0.0	0.0	0.0	0.0	0.0	0.0
	T	1.92E-05	4.39E-02	8.01E-05	5.91E-04	3.32E-04	9.78E-04	6.70E-05	6.05E-05	1.30E-05	1.30E-05	3.10E-04
GI TRACT S WALL	G	5.14E-04	5.67E-05	9.06E-03	5.90E-04	6.29E-04	3.15E-04	5.85E-04	3.30E-04	3.20E-04	3.20E-04	2.45E-04
	B	0.0	0.0	2.48E-02	0.0	0.0	0.0	0.0	0.0	0.0	0.0	0.0
	T	5.14E-04	5.67E-05	3.38E-02	5.90E-04	6.29E-04	3.15E-04	5.85E-04	3.30E-04	3.20E-04	3.20E-04	2.45E-04
SI+CONT	G	1.68E-04	4.55E-04	4.59E-04	5.40E-03	2.84E-03	1.55E-03	4.77E-04	2.76E-04	4.87E-05	4.87E-05	2.70E-04
	B	0.0	0.0	0.0	1.55E-02	0.0	0.0	0.0	0.0	0.0	0.0	0.0
	T	1.68E-04	4.55E-04	4.59E-04	2.09E-02	2.84E-03	1.55E-03	4.77E-04	2.76E-04	4.87E-05	4.87E-05	2.70E-04
ULI WALL	G	1.83E-04	4.13E-04	5.73E-04	3.97E-03	7.44E-03	7.35E-04	5.01E-04	4.47E-04	6.70E-05	6.70E-05	2.84E-04
	B	0.0	0.0	0.0	0.0	2.82E-02	0.0	0.0	0.0	0.0	0.0	0.0
	T	1.83E-04	4.13E-04	5.73E-04	3.97E-03	3.56E-02	7.35E-04	5.01E-04	4.47E-04	6.70E-05	6.70E-05	2.84E-04
LLI WALL	G	6.20E-05	1.23E-03	2.21E-04	1.17E-03	5.22E-04	8.97E-03	1.53E-04	5.66E-05	1.37E-05	1.37E-05	2.96E-04
	B	0.0	0.0	0.0	0.0	0.0	4.59E-02	0.0	0.0	0.0	0.0	0.0
	T	6.20E-05	1.23E-03	2.21E-04	1.17E-03	5.22E-04	5.49E-02	1.53E-04	5.66E-05	1.37E-05	1.37E-05	2.96E-04
KIDNEYS	G	2.00E-03	6.74E-05	5.73E-04	5.53E-04	4.73E-04	1.44E-04	1.28E-02	6.55E-04	1.83E-04	1.83E-04	2.50E-04
	B	0.0	0.0	0.0	0.0	0.0	0.0	4.00E-02	0.0	0.0	0.0	0.0
	T	2.00E-03	6.74E-05	5.73E-04	5.53E-04	4.73E-04	1.44E-04	5.27E-02	6.55E-04	1.83E-04	1.83E-04	2.50E-04
LIVER	G	8.52E-04	4.95E-05	3.55E-04	3.14E-04	4.28E-04	6.06E-05	6.97E-04	4.48E-03	4.14E-04	4.14E-04	1.95E-04
	B	0.0	0.0	0.0	0.0	0.0	0.0	0.0	6.88E-03	0.0	0.0	0.0
	T	8.52E-04	4.95E-05	3.55E-04	3.14E-04	4.28E-04	6.06E-05	6.97E-04	1.14E-02	4.14E-04	4.14E-04	1.95E-04
LUNGS	G	4.05E-04	8.52E-06	3.24E-04	5.87E-05	5.96E-05	1.79E-05	1.66E-04	4.17E-04	2.53E-03	2.53E-03	2.34E-04
	B	0.0	0.0	0.0	0.0	0.0	0.0	0.0	0.0	1.24E-02	1.24E-02	0.0
	T	4.05E-04	8.52E-06	3.24E-04	5.87E-05	5.96E-05	1.79E-05	1.66E-04	4.17E-04	1.49E-02	1.49E-02	2.34E-04
RESP LYM NODE	G	4.05E-04	8.52E-06	3.24E-04	5.87E-05	5.96E-05	1.79E-05	1.66E-04	4.17E-04	2.53E-03	2.53E-03	2.34E-04
	B	0.0	0.0	0.0	0.0	0.0	0.0	0.0	0.0	1.24E-02	8.26E-01	0.0
	T	4.05E-04	8.52E-06	3.24E-04	5.87E-05	5.96E-05	1.79E-05	1.66E-04	4.17E-04	1.49E-02	8.28E-01	2.34E-04
MUSCLE*	G	2.67E-04	3.10E-04	2.45E-04	2.70E-04	2.58E-04	2.96E-04	2.50E-04	1.95E-04	2.34E-04	2.34E-04	2.64E-04
	B	0.0	0.0	0.0	0.0	0.0	0.0	0.0	0.0	0.0	0.0	4.42E-04
	T	2.67E-04	3.10E-04	2.45E-04	2.70E-04	2.58E-04	2.96E-04	2.50E-04	1.95E-04	2.34E-04	2.34E-04	7.07E-04
OVARIES	G	9.52E-05	1.09E-03	8.99E-05	1.52E-03	2.20E-03	2.75E-03	2.02E-04	3.52E-05	2.68E-05	2.68E-05	3.47E-04
	B	0.0	0.0	0.0	0.0	0.0	0.0	0.0	0.0	0.0	0.0	0.0
	T	9.52E-05	1.09E-03	8.99E-05	1.52E-03	2.20E-03	2.75E-03	2.02E-04	3.52E-05	2.68E-05	2.68E-05	3.47E-04

9-FLUORINE-18 CONTINUED

SOURCE ORGANS

TARGET ORGANS		ADRENALS	BLAD CON	S CONT	SI+CONT	ULI CONT	LLI CONT	KIDNEYS	LIVER	LUNG	RESP LYM NODE	MUSCLE*
PANCREAS	G	1.46E-03	4.54E-05	3.04E-03	3.63E-04	3.11E-04	1.31E-04	1.14E-03	8.37E-04	4.85E-04	4.85E-04	3.14E-04
	B	0.0	0.0	0.0	0.0	0.0	0.0	0.0	0.0	0.0	0.0	0.0
	T	1.46E-03	4.54E-05	3.04E-03	3.63E-04	3.11E-04	1.31E-04	1.14E-03	8.37E-04	4.85E-04	4.85E-04	3.14E-04
SKELETON BONE	G	2.38E-04	1.03E-04	1.05E-04	1.36E-04	1.26E-04	1.82E-04	1.72E-04	1.28E-04	1.75E-04	1.75E-04	1.93E-04
	B	0.0	0.0	0.0	0.0	0.0	0.0	0.0	0.0	0.0	0.0	0.0
	T	2.38E-04	1.03E-04	1.05E-04	1.36E-04	1.26E-04	1.82E-04	1.72E-04	1.28E-04	1.75E-04	1.75E-04	1.93E-04
R MARROW	G	4.27E-04	2.19E-04	1.83E-04	4.34E-04	3.76E-04	5.44E-04	4.35E-04	1.88E-04	2.20E-04	2.20E-04	2.40E-04
	B	0.0	0.0	0.0	0.0	0.0	0.0	0.0	0.0	0.0	0.0	0.0
	T	4.27E-04	2.19E-04	1.83E-04	4.34E-04	3.76E-04	5.44E-04	4.35E-04	1.88E-04	2.20E-04	2.20E-04	2.40E-04
Y MARROW	G	2.30E-04	9.38E-05	1.47E-04	1.89E-04	1.79E-04	2.25E-04	2.13E-04	1.87E-04	1.84E-04	1.84E-04	1.96E-04
	B	0.0	0.0	0.0	0.0	0.0	0.0	0.0	0.0	0.0	0.0	0.0
	T	2.30E-04	9.38E-05	1.47E-04	1.89E-04	1.79E-04	2.25E-04	2.13E-04	1.87E-04	1.84E-04	1.84E-04	1.96E-04
T E CL	G	2.38E-04	1.03E-04	1.05E-04	1.36E-04	1.26E-04	1.82E-04	1.72E-04	1.28E-04	1.75E-04	1.75E-04	1.93E-04
	B	0.0	0.0	0.0	0.0	0.0	0.0	0.0	0.0	0.0	0.0	0.0
	T	2.38E-04	1.03E-04	1.05E-04	1.36E-04	1.26E-04	1.82E-04	1.72E-04	1.28E-04	1.75E-04	1.75E-04	1.93E-04
SKIN	G	1.19E-04	1.14E-04	1.04E-04	9.29E-05	9.72E-05	1.03E-04	1.16E-04	1.05E-04	1.19E-04	1.19E-04	1.59E-04
	B	0.0	0.0	0.0	0.0	0.0	0.0	0.0	0.0	0.0	0.0	0.0
	T	1.19E-04	1.14E-04	1.04E-04	9.29E-05	9.72E-05	1.03E-04	1.16E-04	1.05E-04	1.19E-04	1.19E-04	1.59E-04
SPLEEN	G	1.12E-03	3.97E-05	1.65E-03	2.74E-04	2.14E-04	1.65E-04	1.44E-03	1.75E-04	3.71E-04	3.71E-04	2.57E-04
	B	0.0	0.0	0.0	0.0	0.0	0.0	0.0	0.0	0.0	0.0	0.0
	T	1.12E-03	3.97E-05	1.65E-03	2.74E-04	2.14E-04	1.65E-04	1.44E-03	1.75E-04	3.71E-04	3.71E-04	2.57E-04
TESTES	G	1.25E-05	8.88E-04	4.64E-06	6.36E-05	9.02E-05	3.60E-04	2.63E-05	2.04E-05	4.31E-06	4.31E-06	2.16E-04
	B	0.0	0.0	0.0	0.0	0.0	0.0	0.0	0.0	0.0	0.0	0.0
	T	1.25E-05	8.88E-04	4.64E-06	6.36E-05	9.02E-05	3.60E-04	2.63E-05	2.04E-05	4.31E-06	4.31E-06	2.16E-04
THYMUS	G	1.65E-04	5.62E-06	4.19E-05	2.45E-05	2.68E-05	1.02E-05	7.03E-05	2.33E-04	6.38E-04	6.38E-04	2.91E-04
	B	0.0	0.0	0.0	0.0	0.0	0.0	0.0	0.0	0.0	0.0	0.0
	T	1.65E-04	5.62E-06	4.19E-05	2.45E-05	2.68E-05	1.02E-05	7.03E-05	2.33E-04	6.38E-04	6.38E-04	2.91E-04
THYROID	G	3.47E-05	1.68E-06	2.67E-05	7.04E-06	7.54E-06	3.21E-06	1.67E-05	3.21E-05	2.11E-04	2.11E-04	2.41E-04
	B	0.0	0.0	0.0	0.0	0.0	0.0	0.0	0.0	0.0	0.0	0.0
	T	3.47E-05	1.68E-06	2.67E-05	7.04E-06	7.54E-06	3.21E-06	1.67E-05	3.21E-05	2.11E-04	2.11E-04	2.41E-04
UTERUS	G	6.56E-05	2.59E-03	1.56E-04	1.51E-03	7.78E-04	9.68E-04	1.45E-04	7.66E-05	1.68E-05	1.68E-05	3.30E-04
	B	0.0	0.0	0.0	0.0	0.0	0.0	0.0	0.0	0.0	0.0	0.0
	T	6.56E-05	2.59E-03	1.56E-04	1.51E-03	7.78E-04	9.68E-04	1.45E-04	7.66E-05	1.68E-05	1.68E-05	3.30E-04
T BODY	G	2.93E-04	3.26E-04	3.09E-04	3.41E-04	3.33E-04	3.30E-04	2.96E-04	2.97E-04	2.53E-04	2.53E-04	2.52E-04
	B	1.77E-04	1.99E-05	5.31E-05	1.42E-04	8.45E-05	1.05E-04	1.77E-04	1.77E-04	1.77E-04	1.77E-04	1.77E-04
	T	4.70E-04	3.46E-04	3.62E-04	4.83E-04	4.17E-04	4.35E-04	4.73E-04	4.74E-04	4.30E-04	4.30E-04	4.29E-04

CONTINUED NEXT PAGE

9-FLUORINE-18 CONTINUED

SOURCE ORGANS

TARGET ORGANS		OVARIES	PANCREAS	COR BONE	CAN BONE	R MARROW	Y MARROW	SKIN	SPLEEN	TESTES	THYROID	T BODY
ADRENALS	G	1.07E-04	1.48E-03	2.97E-04	2.97E-04	3.02E-04	1.86E-04	1.15E-04	1.05E-03	1.25E-05	3.47E-05	4.00E-04
	B	0.0	0.0	0.0	0.0	0.0	0.0	0.0	0.0	0.0	0.0	1.77E-04
	T	1.07E-04	1.48E-03	2.97E-04	2.97E-04	3.02E-04	1.86E-04	1.15E-04	1.05E-03	1.25E-05	3.47E-05	5.77E-04
BLAD WALL	G	1.16E-03	3.43E-05	1.15E-04	1.15E-04	1.19E-04	4.50E-05	1.10E-04	2.38E-05	8.87E-04	1.70E-06	3.17E-04
	B	0.0	0.0	0.0	0.0	0.0	0.0	0.0	0.0	0.0	0.0	1.77E-04
	T	1.16E-03	3.43E-05	1.15E-04	1.15E-04	1.19E-04	4.50E-05	1.10E-04	2.38E-05	8.87E-04	1.70E-06	4.94E-04
GI TRACT S WALL	G	1.46E-04	2.95E-03	1.02E-04	1.02E-04	1.73E-04	1.30E-04	1.13E-04	1.71E-03	2.05E-05	2.25E-05	3.11E-04
	B	0.0	0.0	0.0	0.0	0.0	0.0	0.0	0.0	0.0	0.0	1.77E-04
	T	1.46E-04	2.95E-03	1.02E-04	1.02E-04	1.73E-04	1.30E-04	1.13E-04	1.71E-03	2.05E-05	2.25E-05	4.88E-04
SI+CONT	G	2.06E-03	3.07E-04	1.41E-04	1.41E-04	4.70E-04	1.84E-04	9.66E-05	2.42E-04	9.38E-05	1.38E-06	3.45E-04
	B	0.0	0.0	0.0	0.0	0.0	0.0	0.0	0.0	0.0	0.0	1.77E-04
	T	2.06E-03	3.07E-04	1.41E-04	1.41E-04	4.70E-04	1.84E-04	9.66E-05	2.42E-04	9.38E-05	1.38E-06	5.22E-04
ULI WALL	G	1.93E-03	3.76E-04	1.22E-04	1.22E-04	3.60E-04	1.49E-04	1.02E-04	2.44E-04	5.63E-05	1.97E-06	3.41E-04
	B	0.0	0.0	0.0	0.0	0.0	0.0	0.0	0.0	0.0	0.0	1.77E-04
	T	1.93E-03	3.76E-04	1.22E-04	1.22E-04	3.60E-04	1.49E-04	1.02E-04	2.44E-04	5.63E-05	1.97E-06	5.18E-04
LLI WALL	G	2.47E-03	9.32E-05	1.65E-04	1.65E-04	5.37E-04	1.44E-04	1.06E-04	1.22E-04	4.96E-04	2.68E-06	3.46E-04
	B	0.0	0.0	0.0	0.0	0.0	0.0	0.0	0.0	0.0	0.0	1.77E-04
	T	2.47E-03	9.32E-05	1.65E-04	1.65E-04	5.37E-04	1.44E-04	1.06E-04	1.22E-04	4.96E-04	2.68E-06	5.23E-04
KIDNEYS	G	1.99E-04	1.08E-03	1.59E-04	1.59E-04	4.14E-04	2.13E-04	1.31E-04	1.48E-03	1.80E-05	8.85E-06	3.07E-04
	B	0.0	0.0	0.0	0.0	0.0	0.0	0.0	0.0	0.0	0.0	1.77E-04
	T	1.99E-04	1.08E-03	1.59E-04	1.59E-04	4.14E-04	2.13E-04	1.31E-04	1.48E-03	1.80E-05	8.85E-06	4.84E-04
LIVER	G	1.07E-04	7.15E-04	1.24E-04	1.24E-04	1.78E-04	1.91E-04	1.19E-04	1.87E-04	9.19E-06	2.80E-05	3.04E-04
	B	0.0	0.0	0.0	0.0	0.0	0.0	0.0	0.0	0.0	0.0	1.77E-04
	T	1.07E-04	7.15E-04	1.24E-04	1.24E-04	1.78E-04	1.91E-04	1.19E-04	1.87E-04	9.19E-06	2.80E-05	4.81E-04
LUNGS	G	1.99E-05	4.16E-04	1.71E-04	1.71E-04	2.10E-04	1.75E-04	1.19E-04	3.83E-04	2.56E-06	1.86E-04	2.71E-04
	B	0.0	0.0	0.0	0.0	0.0	0.0	0.0	0.0	0.0	0.0	1.77E-04
	T	1.99E-05	4.16E-04	1.71E-04	1.71E-04	2.10E-04	1.75E-04	1.19E-04	3.83E-04	2.56E-06	1.86E-04	4.48E-04
RESP LYM NODE	G	1.99E-05	4.16E-04	1.71E-04	1.71E-04	2.10E-04	1.75E-04	1.19E-04	3.83E-04	2.56E-06	1.86E-04	2.71E-04
	B	0.0	0.0	0.0	0.0	0.0	0.0	0.0	0.0	0.0	0.0	1.77E-04
	T	1.99E-05	4.16E-04	1.71E-04	1.71E-04	2.10E-04	1.75E-04	1.19E-04	3.83E-04	2.56E-06	1.86E-04	4.48E-04
MUSCLE*	G	3.47E-04	3.14E-04	1.93E-04	1.93E-04	2.28E-04	1.81E-04	1.59E-04	2.57E-04	2.16E-04	2.41E-04	2.52E-04
	B	0.0	0.0	0.0	0.0	0.0	0.0	0.0	0.0	0.0	0.0	1.77E-04
	T	3.47E-04	3.14E-04	1.93E-04	1.93E-04	2.28E-04	1.81E-04	1.59E-04	2.57E-04	2.16E-04	2.41E-04	4.29E-04
OVARIES	G	1.32E-01	6.75E-05	1.89E-04	1.89E-04	6.29E-04	1.47E-04	5.30E-05	1.85E-04	1.79E-50	3.19E-06	2.94E-04
	B	1.13E 00	0.0	0.0	0.0	0.0	0.0	0.0	0.0	0.0	0.0	1.77E-04
	T	1.26E 00	6.75E-05	1.89E-04	1.89E-04	6.29E-04	1.47E-04	5.30E-05	1.85E-04	1.79E-50	3.19E-06	4.71E-04

9-FLUORINE-18 CONTINUED

SOURCE ORGANS

TARGET ORGANS		OVARIES	PANCREAS	COR BONE	CAN BONE	R MARROW	Y MARROW	SKIN	SPLEEN	TESTES	THYROID	T BODY
PANCREAS	G	9.78E-05	3.69E-02	1.58E-04	1.58E-04	2.99E-04	2.29E-04	1.02E-04	3.39E-03	6.76E-06	1.18E-05	3.01E-04
	B	0.0	1.24E-01	0.0	0.0	0.0	0.0	0.0	0.0	0.0	0.0	1.77E-04
	T	9.78E-05	1.61E-01	1.58E-04	1.58E-04	2.99E-04	2.29E-04	1.02E-04	3.39E-03	6.76E-06	1.18E-05	4.78E-04
SKELETON BONE	G	1.61E-04	1.60E-04	6.04E-04	6.04E-04	4.05E-04	4.48E-04	1.48E-04	1.34E-04	1.16E-04	1.32E-04	2.61E-04
	B	0.0	0.0	2.48E-03	1.58E-03	5.96E-04	0.0	0.0	0.0	0.0	0.0	1.77E-04
	T	1.61E-04	1.60E-04	3.08E-03	2.19E-03	1.00E-03	4.48E-04	1.48E-04	1.34E-04	1.16E-04	1.32E-04	4.38E-04
R MARROW	G	5.37E-04	3.02E-04	5.38E-04	5.38E-04	1.30E-03	4.66E-04	1.38E-04	1.98E-04	9.19E-05	1.46E-04	2.87E-04
	B	0.0	0.0	5.20E-05	2.98E-03	6.27E-03	0.0	0.0	0.0	0.0	0.0	1.77E-04
	T	5.37E-04	3.02E-04	5.90E-04	3.52E-03	7.57E-03	4.66E-04	1.38E-04	1.98E-04	9.19E-05	1.46E-04	4.64E-04
Y MARROW	G	2.15E-04	1.88E-04	5.21E-04	5.21E-04	4.98E-04	7.61E-04	1.57E-04	2.02E-04	4.96E-05	7.01E-05	2.44E-04
	B	0.0	0.0	0.0	0.0	0.0	8.26E-03	0.0	0.0	0.0	0.0	1.77E-04
	T	2.15E-04	1.88E-04	5.21E-04	5.21E-04	4.98E-04	9.02E-03	1.57E-04	2.02E-04	4.96E-05	7.01E-05	4.21E-04
T E CL	G	1.61E-04	1.60E-04	6.04E-04	6.04E-04	5.46E-04	4.95E-04	1.48E-04	1.34E-04	1.16E-04	1.32E-04	2.61E-04
	B	0.0	0.0	1.59E-03	2.84E-03	2.24E-03	2.06E-03	0.0	0.0	0.0	0.0	1.77E-04
	T	1.61E-04	1.60E-04	2.20E-03	3.44E-03	2.78E-03	2.56E-03	1.48E-04	1.34E-04	1.16E-04	1.32E-04	4.38E-04
SKIN	G	9.20E-05	8.86E-05	1.52E-04	1.52E-04	1.31E-04	1.70E-04	3.52E-04	1.11E-04	2.78E-04	1.51E-04	1.57E-04
	B	0.0	0.0	0.0	0.0	0.0	0.0	4.76E-03	0.0	0.0	0.0	1.77E-04
	T	9.20E-05	8.86E-05	1.52E-04	1.52E-04	1.31E-04	1.70E-04	5.12E-03	1.11E-04	2.78E-04	1.51E-04	3.34E-04
SPLEEN	G	1.21E-04	3.33E-03	1.47E-04	1.47E-04	1.41E-04	1.71E-04	1.16E-04	2.27E-02	2.28E-05	2.26E-05	3.12E-04
	B	0.0	0.0	0.0	0.0	0.0	0.0	0.0	6.88E-02	0.0	0.0	1.77E-04
	T	1.21E-04	3.33E-03	1.47E-04	1.47E-04	1.41E-04	1.71E-04	1.16E-04	9.16E-02	2.28E-05	2.26E-05	4.89E-04
TESTES	G	1.79E-50	1.11E-05	1.01E-04	1.01E-04	7.56E-05	1.69E-04	1.45E-04	1.68E-05	6.22E-02	6.06E-07	3.28E-04
	B	0.0	0.0	0.0	0.0	0.0	0.0	0.0	0.0	3.54E-01	0.0	1.77E-04
	T	1.79E-50	1.11E-05	1.01E-04	1.01E-04	7.56E-05	1.69E-04	1.45E-04	1.68E-05	4.16E-01	6.06E-07	5.05E-04
THYMUS	G	1.08E-05	9.28E-05	1.34E-04	1.34E-04	7.84E-05	6.39E-05	1.51E-04	8.45E-05	1.97E-06	7.68E-04	2.63E-04
	B	0.0	0.0	0.0	0.0	0.0	0.0	0.0	0.0	0.0	0.0	1.77E-04
	T	1.08E-05	9.28E-05	1.34E-04	1.34E-04	7.84E-05	6.39E-05	1.51E-04	8.45E-05	1.97E-06	7.68E-04	4.40E-04
THYROID	G	3.19E-06	3.23E-05	1.93E-04	1.93E-04	1.58E-04	7.70E-05	1.46E-04	2.60E-05	6.06E-07	8.38E-02	2.51E-04
	B	0.0	0.0	0.0	0.0	0.0	0.0	0.0	0.0	0.0	6.19E-01	1.77E-04
	T	3.19E-06	3.23E-05	1.93E-04	1.93E-04	1.58E-04	7.70E-05	1.46E-04	2.60E-05	6.06E-07	7.03E-01	4.28E-04
UTERUS	G	3.13E-03	1.10E-04	1.01E-04	1.01E-04	3.33E-04	1.16E-04	1.00E-04	8.21E-05	1.79E-50	3.02E-06	3.05E-04
	B	0.0	0.0	0.0	0.0	0.0	0.0	0.0	0.0	0.0	0.0	1.77E-04
	T	3.13E-03	1.10E-04	1.01E-04	1.01E-04	3.33E-04	1.16E-04	1.00E-04	8.21E-05	1.79E-50	3.02E-06	4.82E-04
T BODY	G	3.48E-04	3.41E-04	2.50E-04	2.50E-04	2.78E-04	2.24E-04	1.60E-04	2.95E-04	2.49E-04	2.28E-04	2.52E-04
	B	1.77E-04	1.77E-04	1.77E-04	1.77E-04	1.77E-04	1.77E-04	1.77E-04	1.77E-04	1.77E-04	1.77E-04	1.77E-04
	T	5.25E-04	5.18E-04	4.27E-04	4.27E-04	4.55E-04	4.01E-04	3.37E-04	4.72E-04	4.26E-04	4.05E-04	4.29E-04

*"MUSCLE" VALUES MAY BE USED FOR "SEPARABLE FAT" WITH ADJUSTMENT (SEE TEXT)
PRINCIPLE REFERENCE-LEDERER, C. M., ET AL., TABLE OF ISOTOPES, 6TH ED.
DATE DECAY DATA REVIEWED-FEBRUARY 1972

S, AVERAGE DOSE EQUIVALENT PER UNIT ACCUMULATED ACTIVITY (REM/UCI-DAY), FOR 11-SODIUM-22 (TR=2.600E 00 YEARS)

DATE OF TABLE 11-27-74

TARGET ORGANS		SOURCE ORGANS										
		ADRENALS	BLAD CON	S CONT	SI+CONT	ULI CONT	LLI CONT	KIDNEYS	LIVER	LUNG	RESP LYM NODE	MUSCLE*
ADRENALS	G	1.67E-01	9.26E-05	9.63E-04	4.47E-04	4.11E-04	1.85E-04	4.50E-03	1.74E-03	8.37E-04	8.37E-04	5.65E-04
	B	7.16E-01	0.0	0.0	0.0	0.0	0.0	0.0	0.0	0.0	0.0	0.0
	T	8.84E-01	9.26E-05	9.63E-04	4.47E-04	4.11E-04	1.85E-04	4.50E-03	1.74E-03	8.37E-04	8.37E-04	5.65E-04
BLAD WALL	G	7.36E-05	2.60E-02	1.76E-04	1.14E-03	6.91E-04	2.11E-03	1.62E-04	1.04E-04	3.31E-05	3.31E-05	6.52E-04
	B	0.0	2.51E-02	0.0	0.0	0.0	0.0	0.0	0.0	0.0	0.0	0.0
	T	7.36E-05	5.11E-02	1.76E-04	1.14E-03	6.91E-04	2.11E-03	1.62E-04	1.04E-04	3.31E-05	3.31E-05	6.52E-04
GI TRACT S WALL	G	1.06E-03	1.54E-04	1.86E-02	1.27E-03	1.27E-03	6.10E-04	1.16E-03	7.12E-04	7.06E-04	7.06E-04	5.21E-04
	B	0.0	0.0	2.01E-02	0.0	0.0	0.0	0.0	0.0	0.0	0.0	0.0
	T	1.06E-03	1.54E-04	3.87E-02	1.27E-03	1.27E-03	6.10E-04	1.16E-03	7.12E-04	7.06E-04	7.06E-04	5.21E-04
SI+CONT	G	3.71E-04	9.77E-04	9.33E-04	1.11E-02	5.76E-03	3.23E-03	1.03E-03	5.92E-04	1.15E-04	1.15E-04	5.69E-04
	B	0.0	0.0	0.0	1.25E-02	0.0	0.0	0.0	0.0	0.0	0.0	0.0
	T	3.71E-04	9.77E-04	9.33E-04	2.36E-02	5.76E-03	3.23E-03	1.03E-03	5.92E-04	1.15E-04	1.15E-04	5.69E-04
ULI WALL	G	3.85E-04	7.88E-04	1.24E-03	8.22E-03	1.55E-02	1.54E-03	1.07E-03	8.78E-04	1.55E-04	1.55E-04	6.01E-04
	B	0.0	0.0	0.0	0.0	2.28E-02	0.0	0.0	0.0	0.0	0.0	0.0
	T	3.85E-04	7.88E-04	1.24E-03	8.22E-03	3.83E-02	1.54E-03	1.07E-03	8.78E-04	1.55E-04	1.55E-04	6.01E-04
LLI WALL	G	1.28E-04	2.54E-03	5.01E-04	2.47E-03	1.12E-03	1.86E-02	3.48E-04	1.24E-04	2.99E-05	2.99E-05	6.23E-04
	B	0.0	0.0	0.0	0.0	0.0	3.71E-02	0.0	0.0	0.0	0.0	0.0
	T	1.28E-04	2.54E-03	5.01E-04	2.47E-03	1.12E-03	5.57E-02	3.48E-04	1.24E-04	2.99E-05	2.99E-05	6.23E-04
KIDNEYS	G	4.02E-03	1.58E-04	1.20E-03	1.13E-03	1.03E-03	3.32E-04	2.63E-02	1.37E-03	3.95E-04	3.95E-04	5.32E-04
	B	0.0	0.0	0.0	0.0	0.0	0.0	3.23E-02	0.0	0.0	0.0	0.0
	T	4.02E-03	1.58E-04	1.20E-03	1.13E-03	1.03E-03	3.32E-04	5.86E-02	1.37E-03	3.95E-04	3.95E-04	5.32E-04
LIVER	G	1.76E-03	1.11E-04	7.39E-04	6.76E-04	9.13E-04	1.48E-04	1.42E-03	9.24E-03	8.72E-04	8.72E-04	4.14E-04
	B	0.0	0.0	0.0	0.0	0.0	0.0	0.0	5.57E-03	0.0	0.0	0.0
	T	1.76E-03	1.11E-04	7.39E-04	6.76E-04	9.13E-04	1.48E-04	1.42E-03	1.48E-02	8.72E-04	8.72E-04	4.14E-04
LUNGS	G	8.71E-04	2.73E-05	6.68E-04	1.27E-04	1.48E-04	5.26E-05	3.59E-04	8.98E-04	5.25E-03	5.25E-03	4.90E-04
	B	0.0	0.0	0.0	0.0	0.0	0.0	0.0	0.0	1.00E-02	1.00E-02	0.0
	T	8.71E-04	2.73E-05	6.68E-04	1.27E-04	1.48E-04	5.26E-05	3.59E-04	8.98E-04	1.53E-02	1.53E-02	4.90E-04
RESP LYM NODE	G	8.71E-04	2.73E-05	6.68E-04	1.27E-04	1.48E-04	5.26E-05	3.59E-04	8.98E-04	5.25E-03	5.25E-03	4.90E-04
	B	0.0	0.0	0.0	0.0	0.0	0.0	0.0	0.0	1.00E-02	6.69E-01	0.0
	T	8.71E-04	2.73E-05	6.68E-04	1.27E-04	1.48E-04	5.26E-05	3.59E-04	8.98E-04	1.53E-02	6.74E-01	4.90E-04
MUSCLE*	G	5.65E-04	6.52E-04	5.21E-04	5.69E-04	5.45E-04	6.23E-04	5.32E-04	4.14E-04	4.90E-04	4.90E-04	5.60E-04
	B	0.0	0.0	0.0	0.0	0.0	0.0	0.0	0.0	0.0	0.0	3.58E-04
	T	5.65E-04	6.52E-04	5.21E-04	5.69E-04	5.45E-04	6.23E-04	5.32E-04	4.14E-04	4.90E-04	4.90E-04	9.19E-04
OVARIES	G	1.52E-04	2.25E-03	3.42E-04	3.25E-03	3.41E-03	5.98E-03	4.86E-04	2.29E-04	6.29E-05	6.29E-05	7.27E-04
	B	0.0	0.0	0.0	0.0	0.0	0.0	0.0	0.0	0.0	0.0	0.0
	T	1.52E-04	2.25E-03	3.42E-04	3.25E-03	3.41E-03	5.98E-03	4.86E-04	2.29E-04	6.29E-05	6.29E-05	7.27E-04

11-SODIUM-22 CONTINUED

TARGET ORGANS		SOURCE ORGANS										
		ADRENALS	BLAD CON	S CONT	SI+CONT	ULI CONT	LLI CONT	KIDNEYS	LIVER	LUNG	RESP LYM NODE	MUSCLE*
PANCREAS	G	3.13E-03	1.00E-04	6.20E-03	7.14E-04	7.17E-04	2.65E-04	2.43E-03	1.61E-03	9.32E-04	9.32E-04	6.56E-04
	B	0.0	0.0	0.0	0.0	0.0	0.0	0.0	0.0	0.0	0.0	0.0
	T	3.13E-03	1.00E-04	6.20E-03	7.14E-04	7.17E-04	2.65E-04	2.43E-03	1.61E-03	9.32E-04	9.32E-04	6.56E-04
SKELETON BONE	G	4.95E-04	2.10E-04	2.18E-04	2.86E-04	2.59E-04	3.73E-04	3.59E-04	2.68E-04	3.59E-04	3.59E-04	4.15E-04
	B	0.0	0.0	0.0	0.0	0.0	0.0	0.0	0.0	0.0	0.0	0.0
	T	4.95E-04	2.10E-04	2.18E-04	2.86E-04	2.59E-04	3.73E-04	3.59E-04	2.68E-04	3.59E-04	3.59E-04	4.15E-04
R MARROW	G	8.77E-04	4.38E-04	3.68E-04	8.87E-04	7.57E-04	1.11E-03	9.00E-04	3.87E-04	4.56E-04	4.56E-04	4.88E-04
	B	0.0	0.0	0.0	0.0	0.0	0.0	0.0	0.0	0.0	0.0	0.0
	T	8.77E-04	4.38E-04	3.68E-04	8.87E-04	7.57E-04	1.11E-03	9.00E-04	3.87E-04	4.56E-04	4.56E-04	4.88E-04
Y MARROW	G	4.80E-04	1.93E-04	3.05E-04	3.93E-04	3.67E-04	4.62E-04	4.43E-04	3.97E-04	3.75E-04	3.75E-04	3.99E-04
	B	0.0	0.0	0.0	0.0	0.0	0.0	0.0	0.0	0.0	0.0	0.0
	T	4.80E-04	1.93E-04	3.05E-04	3.93E-04	3.67E-04	4.62E-04	4.43E-04	3.97E-04	3.75E-04	3.75E-04	3.99E-04
T E CL	G	4.95E-04	2.10E-04	2.18E-04	2.86E-04	2.59E-04	3.73E-04	3.59E-04	2.68E-04	3.59E-04	3.59E-04	4.15E-04
	B	0.0	0.0	0.0	0.0	0.0	0.0	0.0	0.0	0.0	0.0	0.0
	T	4.95E-04	2.10E-04	2.18E-04	2.86E-04	2.59E-04	3.73E-04	3.59E-04	2.68E-04	3.59E-04	3.59E-04	4.15E-04
SKIN	G	2.70E-04	2.55E-04	2.28E-04	2.14E-04	2.12E-04	2.36E-04	2.50E-04	2.32E-04	2.59E-04	2.59E-04	3.48E-04
	B	0.0	0.0	0.0	0.0	0.0	0.0	0.0	0.0	0.0	0.0	0.0
	T	2.70E-04	2.55E-04	2.28E-04	2.14E-04	2.12E-04	2.36E-04	2.50E-04	2.32E-04	2.59E-04	2.59E-04	3.48E-04
SPLEEN	G	2.23E-03	8.50E-05	3.44E-03	5.94E-04	5.03E-04	3.68E-04	3.01E-03	3.81E-04	7.48E-04	7.48E-04	5.44E-04
	B	0.0	0.0	0.0	0.0	0.0	0.0	0.0	0.0	0.0	0.0	0.0
	T	2.23E-03	8.50E-05	3.44E-03	5.94E-04	5.03E-04	3.68E-04	3.01E-03	3.81E-04	7.48E-04	7.48E-04	5.44E-04
TESTES	G	3.23E-05	1.75E-03	4.23E-05	1.81E-04	1.87E-04	6.52E-04	6.28E-05	6.16E-05	1.27E-05	1.27E-05	4.64E-04
	B	0.0	0.0	0.0	0.0	0.0	0.0	0.0	0.0	0.0	0.0	0.0
	T	3.23E-05	1.75E-03	4.23E-05	1.81E-04	1.87E-04	6.52E-04	6.28E-05	6.16E-05	1.27E-05	1.27E-05	4.64E-04
THYMUS	G	2.86E-04	1.62E-05	2.04E-04	5.85E-05	6.34E-05	2.68E-05	1.14E-04	3.70E-04	1.48E-03	1.48E-03	6.56E-04
	B	0.0	0.0	0.0	0.0	0.0	0.0	0.0	0.0	0.0	0.0	0.0
	T	2.86E-04	1.62E-05	2.04E-04	5.85E-05	6.34E-05	2.68E-05	1.14E-04	3.70E-04	1.48E-03	1.48E-03	6.56E-04
THYROID	G	8.42E-05	5.87E-06	6.34E-05	1.95E-05	2.07E-05	9.81E-06	4.16E-05	7.46E-05	4.33E-04	4.33E-04	5.06E-04
	B	0.0	0.0	0.0	0.0	0.0	0.0	0.0	0.0	0.0	0.0	0.0
	T	8.42E-05	5.87E-06	6.34E-05	1.95E-05	2.07E-05	9.81E-06	4.16E-05	7.46E-05	4.33E-04	4.33E-04	5.06E-04
UTERUS	G	1.64E-04	5.22E-03	3.58E-04	3.08E-03	1.73E-03	2.07E-03	3.48E-04	1.83E-04	6.08E-05	6.08E-05	7.60E-04
	B	0.0	0.0	0.0	0.0	0.0	0.0	0.0	0.0	0.0	0.0	0.0
	T	1.64E-04	5.22E-03	3.58E-04	3.08E-03	1.73E-03	2.07E-03	3.48E-04	1.83E-04	6.08E-05	6.08E-05	7.60E-04
T BODY	G	6.18E-04	6.82E-04	6.51E-04	7.15E-04	6.99E-04	6.94E-04	6.24E-04	6.23E-04	5.30E-04	5.30E-04	5.34E-04
	B	1.43E-04	1.61E-05	4.30E-05	1.15E-04	6.84E-05	8.49E-05	1.43E-04	1.43E-04	1.43E-04	1.43E-04	1.43E-04
	T	7.61E-04	6.98E-04	6.94E-04	8.29E-04	7.67E-04	7.79E-04	7.67E-04	7.67E-04	6.73E-04	6.73E-04	6.78E-04

CONTINUED NEXT PAGE

11-SODIUM-22 CONTINUED

TARGET ORGANS		SOURCE ORGANS										
		OVARIES	PANCREAS	COR BONE	CAN BONE	R MARROW	Y MARROW	SKIN	SPLEEN	TESTES	THYROID	T BODY
ADRENALS	G	2.16E-04	2.87E-03	6.90E-04	6.90E-04	8.12E-04	3.74E-04	2.91E-04	2.37E-03	3.23E-05	8.05E-05	8.98E-04
	B	0.0	0.0	0.0	0.0	0.0	0.0	0.0	0.0	0.0	0.0	1.43E-04
	T	2.16E-04	2.87E-03	6.90E-04	6.90E-04	8.12E-04	3.74E-04	2.91E-04	2.37E-03	3.23E-05	8.05E-05	1.04E-03
BLAD WALL	G	2.49E-03	8.05E-05	2.39E-04	2.39E-04	3.57E-04	1.24E-04	2.77E-04	9.09E-05	1.84E-03	5.90E-06	6.97E-04
	B	0.0	0.0	0.0	0.0	0.0	0.0	0.0	0.0	0.0	0.0	1.43E-04
	T	2.49E-03	8.05E-05	2.39E-04	2.39E-04	3.57E-04	1.24E-04	2.77E-04	9.09E-05	1.84E-03	5.90E-06	8.40E-04
GI TRACT S WALL	G	3.26E-04	6.12E-03	2.16E-04	2.16E-04	4.05E-04	2.75E-04	2.45E-04	3.58E-03	4.17E-05	5.76E-05	5.98E-04
	B	0.0	0.0	0.0	0.0	0.0	0.0	0.0	0.0	0.0	0.0	1.43E-04
	T	3.26E-04	6.12E-03	2.16E-04	2.16E-04	4.05E-04	2.75E-04	2.45E-04	3.58E-03	4.17E-05	5.76E-05	7.41E-04
SI+CONT	G	4.17E-03	6.62E-04	2.98E-04	2.98E-04	9.52E-04	3.85E-04	2.19E-04	5.27E-04	2.04E-04	1.22E-05	7.17E-04
	B	0.0	0.0	0.0	0.0	0.0	0.0	0.0	0.0	0.0	0.0	1.43E-04
	T	4.17E-03	6.62E-04	2.98E-04	2.98E-04	9.52E-04	3.85E-04	2.19E-04	5.27E-04	2.04E-04	1.22E-05	8.60E-04
ULI WALL	G	3.94E-03	8.05E-04	2.75E-04	2.75E-04	7.23E-04	3.39E-04	2.25E-04	5.28E-04	1.35E-04	1.45E-05	6.87E-04
	B	0.0	0.0	0.0	0.0	0.0	0.0	0.0	0.0	0.0	0.0	1.43E-04
	T	3.94E-03	8.05E-04	2.75E-04	2.75E-04	7.23E-04	3.39E-04	2.25E-04	5.28E-04	1.35E-04	1.45E-05	8.31E-04
LLI WALL	G	5.00E-03	2.25E-04	3.68E-04	3.68E-04	1.09E-03	3.26E-04	2.33E-04	2.50E-04	9.62E-04	8.43E-06	7.22E-04
	B	0.0	0.0	0.0	0.0	0.0	0.0	0.0	0.0	0.0	0.0	1.43E-04
	T	5.00E-03	2.25E-04	3.68E-04	3.68E-04	1.09E-03	3.26E-04	2.33E-04	2.50E-04	9.62E-04	8.43E-06	8.65E-04
KIDNEYS	G	4.11E-04	2.23E-03	3.80E-04	3.80E-04	9.02E-04	4.41E-04	2.85E-04	3.06E-03	5.19E-05	4.17E-05	6.36E-04
	B	0.0	0.0	0.0	0.0	0.0	0.0	0.0	0.0	0.0	0.0	1.43E-04
	T	4.11E-04	2.23E-03	3.80E-04	3.80E-04	9.02E-04	4.41E-04	2.85E-04	3.06E-03	5.19E-05	4.17E-05	7.79E-04
LIVER	G	2.41E-04	1.48E-03	2.69E-04	2.69E-04	3.83E-04	4.12E-04	2.56E-04	4.03E-04	3.41E-05	7.14E-05	6.38E-04
	B	0.0	0.0	0.0	0.0	0.0	0.0	0.0	0.0	0.0	0.0	1.43E-04
	T	2.41E-04	1.48E-03	2.69E-04	2.69E-04	3.83E-04	4.12E-04	2.56E-04	4.03E-04	3.41E-05	7.14E-05	7.81E-04
LUNGS	G	5.46E-05	8.49E-04	3.65E-04	3.65E-04	4.57E-04	3.82E-04	2.64E-04	7.82E-04	1.11E-05	4.07E-04	5.33E-04
	B	0.0	0.0	0.0	0.0	0.0	0.0	0.0	0.0	0.0	0.0	1.43E-04
	T	5.46E-05	8.49E-04	3.65E-04	3.65E-04	4.57E-04	3.82E-04	2.64E-04	7.82E-04	1.11E-05	4.07E-04	6.76E-04
RESP LYM NODE	G	5.46E-05	8.49E-04	3.65E-04	3.65E-04	4.57E-04	3.82E-04	2.64E-04	7.82E-04	1.11E-05	4.07E-04	5.33E-04
	B	0.0	0.0	0.0	0.0	0.0	0.0	0.0	0.0	0.0	0.0	1.43E-04
	T	5.46E-05	8.49E-04	3.65E-04	3.65E-04	4.57E-04	3.82E-04	2.64E-04	7.82E-04	1.11E-05	4.07E-04	6.76E-04
MUSCLE*	G	7.27E-04	6.56E-04	4.15E-04	4.15E-04	4.86E-04	3.83E-04	3.48E-04	5.44E-04	4.64E-04	5.06E-04	5.34E-04
	B	0.0	0.0	0.0	0.0	0.0	0.0	0.0	0.0	0.0	0.0	1.43E-04
	T	7.27E-04	6.56E-04	4.15E-04	4.15E-04	4.86E-04	3.83E-04	3.48E-04	5.44E-04	4.64E-04	5.06E-04	6.78E-04
OVARIES	G	2.77E-01	2.51E-04	3.70E-04	3.70E-04	1.24E-03	3.35E-04	1.74E-04	3.01E-04	2.97E-49	1.00E-05	6.34E-04
	B	9.12E-01	0.0	0.0	0.0	0.0	0.0	0.0	0.0	0.0	0.0	1.43E-04
	T	1.19E 00	2.51E-04	3.70E-04	3.70E-04	1.24E-03	3.35E-04	1.74E-04	3.01E-04	2.97E-49	1.00E-05	7.77E-04

11-SODIUM-22 CONTINUED

TARGET ORGANS		SOURCE ORGANS										
		OVARIES	PANCREAS	COR BONE	CAN BONE	R MARROW	Y MARROW	SKIN	SPLEEN	TESTES	THYROID	T BODY
PANCREAS	G	2.48E-04	7.70E-02	3.77E-04	3.77E-04	5.28E-04	4.32E-04	2.07E-04	6.71E-03	3.30E-05	7.00E-05	6.13E-04
	B	0.0	1.00E-01	0.0	0.0	0.0	0.0	0.0	0.0	0.0	0.0	1.43E-04
	T	2.48E-04	1.77E-01	3.77E-04	3.77E-04	5.28E-04	4.32E-04	2.07E-04	6.71E-03	3.30E-05	7.00E-05	7.56E-04
SKELETON BONE	G	3.31E-04	3.34E-04	1.25E-03	1.25E-03	8.37E-04	9.35E-04	3.20E-04	2.83E-04	2.43E-04	2.77E-04	5.37E-04
	B	0.0	0.0	2.01E-03	1.29E-03	4.75E-04	0.0	0.0	0.0	0.0	0.0	1.43E-04
	T	3.31E-04	3.34E-04	3.26E-03	2.55E-03	1.31E-03	9.35E-04	3.20E-04	2.83E-04	2.43E-04	2.77E-04	6.80E-04
R MARROW	G	1.08E-03	6.23E-04	1.13E-03	1.13E-03	2.66E-03	9.63E-04	2.99E-04	4.11E-04	1.90E-04	3.04E-04	5.89E-04
	B	0.0	0.0	3.55E-05	2.37E-03	5.10E-03	0.0	0.0	0.0	0.0	0.0	1.43E-04
	T	1.08E-03	6.23E-04	1.16E-03	3.50E-03	7.77E-03	9.63E-04	2.99E-04	4.11E-04	1.90E-04	3.04E-04	7.33E-04
Y MARROW	G	4.38E-04	3.93E-04	1.08E-03	1.08E-03	1.03E-03	1.59E-03	3.40E-04	4.22E-04	1.07E-04	1.51E-04	5.00E-04
	B	0.0	0.0	0.0	0.0	0.0	6.69E-03	0.0	0.0	0.0	0.0	1.43E-04
	T	4.38E-04	3.93E-04	1.08E-03	1.08E-03	1.03E-03	8.27E-03	3.40E-04	4.22E-04	1.07E-04	1.51E-04	6.43E-04
T E CL	G	3.31E-04	3.34E-04	1.25E-03	1.25E-03	1.13E-03	1.03E-03	3.20E-04	2.83E-04	2.43E-04	2.77E-04	5.37E-04
	B	0.0	0.0	1.28E-03	2.32E-03	1.80E-03	1.67E-03	0.0	0.0	0.0	0.0	1.43E-04
	T	3.31E-04	3.34E-04	2.53E-03	3.57E-03	2.92E-03	2.70E-03	3.20E-04	2.83E-04	2.43E-04	2.77E-04	6.80E-04
SKIN	G	2.05E-04	2.02E-04	3.28E-04	3.28E-04	2.86E-04	3.58E-04	7.61E-04	2.40E-04	5.94E-04	3.37E-04	3.51E-04
	B	0.0	0.0	0.0	0.0	0.0	0.0	3.86E-03	0.0	0.0	0.0	1.43E-04
	T	2.05E-04	2.02E-04	3.28E-04	3.28E-04	2.86E-04	3.58E-04	4.62E-03	2.40E-04	5.94E-04	3.37E-04	4.95E-04
SPLEEN	G	2.32E-04	6.73E-03	2.97E-04	2.97E-04	3.41E-04	4.12E-04	2.54E-04	4.68E-02	3.61E-05	6.49E-05	6.27E-04
	B	0.0	0.0	0.0	0.0	0.0	0.0	0.0	5.57E-02	0.0	0.0	1.43E-04
	T	2.32E-04	6.73E-03	2.97E-04	2.97E-04	3.41E-04	4.12E-04	2.54E-04	1.03E-01	3.61E-05	6.49E-05	7.70E-04
TESTES	G	2.97E-49	3.91E-05	2.44E-04	2.44E-04	1.32E-04	3.45E-04	3.36E-04	4.19E-05	1.29E-01	2.55E-06	6.50E-04
	B	0.0	0.0	0.0	0.0	0.0	0.0	0.0	0.0	2.87E-01	0.0	1.43E-04
	T	2.97E-49	3.91E-05	2.44E-04	2.44E-04	1.32E-04	3.45E-04	3.36E-04	4.19E-05	4.16E-01	2.55E-06	7.93E-04
THYMUS	G	2.83E-05	2.15E-04	2.59E-04	2.59E-04	2.56E-04	1.94E-04	2.82E-04	1.65E-04	6.66E-06	1.55E-03	5.84E-04
	B	0.0	0.0	0.0	0.0	0.0	0.0	0.0	0.0	0.0	0.0	1.43E-04
	T	2.83E-05	2.15E-04	2.59E-04	2.59E-04	2.56E-04	1.94E-04	2.82E-04	1.65E-04	6.66E-06	1.55E-03	7.28E-04
THYROID	G	1.00E-05	5.84E-05	3.64E-04	3.64E-04	3.17E-04	2.05E-04	2.90E-04	6.18E-05	2.55E-06	1.76E-01	5.33E-04
	B	0.0	0.0	0.0	0.0	0.0	0.0	0.0	0.0	0.0	5.01E-01	1.43E-04
	T	1.00E-05	5.84E-05	3.64E-04	3.64E-04	3.17E-04	2.05E-04	2.90E-04	6.18E-05	2.55E-06	6.77E-01	6.76E-04
UTERUS	G	6.22E-03	2.28E-04	2.58E-04	2.58E-04	6.59E-04	2.21E-04	2.45E-04	1.61E-04	2.97E-49	9.56E-06	6.99E-04
	B	0.0	0.0	0.0	0.0	0.0	0.0	0.0	0.0	0.0	0.0	1.43E-04
	T	6.22E-03	2.28E-04	2.58E-04	2.58E-04	6.59E-04	2.21E-04	2.45E-04	1.61E-04	2.97E-49	9.56E-06	8.42E-04
T BODY	G	7.27E-04	7.13E-04	5.30E-04	5.30E-04	5.87E-04	4.74E-04	3.49E-04	6.21E-04	5.31E-04	4.82E-04	5.32E-04
	B	1.43E-04	1.43E-04	1.43E-04	1.43E-04	1.43E-04	1.43E-04	1.43E-04	1.43E-04	1.43E-04	1.43E-04	1.43E-04
	T	8.70E-04	8.56E-04	6.73E-04	6.73E-04	7.30E-04	6.17E-04	4.92E-04	7.64E-04	6.74E-04	6.26E-04	6.75E-04

*"MUSCLE" VALUES MAY BE USED FOR "SEPARABLE FAT" WITH ADJUSTMENT (SEE TEXT)
PRINCIPLE REFERENCE-VATAI, E. AND VARGI, D., NUCL. PHYS. A116, 637 (1968)
DATE DECAY DATA REVIEWED-FEBRUARY 1972

S, AVERAGE DOSE EQUIVALENT PER UNIT ACCUMULATED ACTIVITY (REM/UCI-DAY), DATE OF TABLE 11-27-74
FOR 11-SODIUM-24 (TR=1.500E 01 HOURS)

TARGET ORGANS		SOURCE ORGANS										
		ADRENALS	BLAD CON	S CONT	SI+CONT	ULI CONT	LLI CONT	KIDNEYS	LIVER	LUNG	RESP LYM NODE	MUSCLE*
ADRENALS	G	2.67E-01	1.72E-04	1.68E-03	7.98E-04	7.31E-04	3.13E-04	6.72E-03	3.31E-03	1.03E-03	1.03E-03	9.18E-04
	B	2.03E 00	0.0	0.0	0.0	0.0	0.0	0.0	0.0	0.0	0.0	0.0
	T	2.29E 00	1.72E-04	1.68E-03	7.98E-04	7.31E-04	3.13E-04	6.72E-03	3.31E-03	1.03E-03	1.03E-03	9.18E-04
BLAD WALL	G	1.97E-04	4.04E-02	2.73E-04	1.67E-03	1.24E-03	3.36E-03	3.06E-04	1.86E-04	7.11E-05	7.11E-05	1.06E-03
	B	0.0	7.09E-02	0.0	0.0	0.0	0.0	0.0	0.0	0.0	0.0	0.0
	T	1.97E-04	1.11E-01	2.73E-04	1.67E-03	1.24E-03	3.36E-03	3.06E-04	1.86E-04	7.11E-05	7.11E-05	1.06E-03
GI TRACT S WALL	G	1.54E-03	3.44E-04	2.91E-02	2.05E-03	2.00E-03	1.08E-03	1.95E-03	1.24E-03	1.16E-03	1.16E-03	8.54E-04
	B	0.0	0.0	5.67E-02	0.0	0.0	0.0	0.0	0.0	0.0	0.0	0.0
	T	1.54E-03	3.44E-04	8.58E-02	2.05E-03	2.00E-03	1.08E-03	1.95E-03	1.24E-03	1.16E-03	1.16E-03	8.54E-04
SI+CONT	G	6.49E-04	1.68E-03	1.54E-03	1.72E-02	8.71E-03	5.14E-03	1.69E-03	9.87E-04	2.35E-04	2.35E-04	9.26E-04
	B	0.0	0.0	0.0	3.54E-02	0.0	0.0	0.0	0.0	0.0	0.0	0.0
	T	6.49E-04	1.68E-03	1.54E-03	5.27E-02	8.71E-03	5.14E-03	1.69E-03	9.87E-04	2.35E-04	2.35E-04	9.26E-04
ULI WALL	G	6.69E-04	1.22E-03	1.94E-03	1.30E-02	2.43E-02	2.40E-03	1.62E-03	1.37E-03	3.13E-04	3.13E-04	9.78E-04
	B	0.0	0.0	0.0	0.0	6.44E-02	0.0	0.0	0.0	0.0	0.0	0.0
	T	6.69E-04	1.22E-03	1.94E-03	1.30E-02	8.87E-02	2.40E-03	1.62E-03	1.37E-03	3.13E-04	3.13E-04	9.78E-04
LLI WALL	G	2.64E-04	4.00E-03	8.12E-04	4.11E-03	1.68E-03	2.87E-02	6.18E-04	2.38E-04	5.17E-05	5.17E-05	1.01E-03
	B	0.0	0.0	0.0	0.0	0.0	1.05E-01	0.0	0.0	0.0	0.0	0.0
	T	2.64E-04	4.00E-03	8.12E-04	4.11E-03	1.68E-03	1.34E-01	6.18E-04	2.38E-04	5.17E-05	5.17E-05	1.01E-03
KIDNEYS	G	6.35E-03	2.92E-04	1.88E-03	1.72E-03	1.59E-03	6.54E-04	4.09E-02	2.21E-03	5.98E-04	5.98E-04	8.76E-04
	B	0.0	0.0	0.0	0.0	0.0	0.0	9.15E-02	0.0	0.0	0.0	0.0
	T	6.35E-03	2.92E-04	1.88E-03	1.72E-03	1.59E-03	6.54E-04	1.32E-01	2.21E-03	5.98E-04	5.98E-04	8.76E-04
LIVER	G	2.80E-03	2.28E-04	1.24E-03	1.12E-03	1.52E-03	2.73E-04	2.25E-03	1.43E-02	1.39E-03	1.39E-03	6.84E-04
	B	0.0	0.0	0.0	0.0	0.0	0.0	0.0	1.58E-02	0.0	0.0	0.0
	T	2.80E-03	2.28E-04	1.24E-03	1.12E-03	1.52E-03	2.73E-04	2.25E-03	3.01E-02	1.39E-03	1.39E-03	6.84E-04
LUNGS	G	1.41E-03	7.46E-05	1.05E-03	2.39E-04	2.72E-04	1.38E-04	6.04E-04	1.45E-03	8.14E-03	8.14E-03	7.91E-04
	B	0.0	0.0	0.0	0.0	0.0	0.0	0.0	0.0	2.84E-02	2.84E-02	0.0
	T	1.41E-03	7.46E-05	1.05E-03	2.39E-04	2.72E-04	1.38E-04	6.04E-04	1.45E-03	3.65E-02	3.65E-02	7.91E-04
RESP LYM NODE	G	1.41E-03	7.46E-05	1.05E-03	2.39E-04	2.72E-04	1.38E-04	6.04E-04	1.45E-03	8.14E-03	8.14E-03	7.91E-04
	B	0.0	0.0	0.0	0.0	0.0	0.0	0.0	0.0	2.84E-02	1.89E 00	0.0
	T	1.41E-03	7.46E-05	1.05E-03	2.39E-04	2.72E-04	1.38E-04	6.04E-04	1.45E-03	3.65E-02	1.90E 00	7.91E-04
MUSCLE*	G	9.18E-04	1.06E-03	8.54E-04	9.26E-04	8.98E-04	1.01E-03	8.76E-04	6.84E-04	7.91E-04	7.91E-04	9.10E-04
	B	0.0	0.0	0.0	0.0	0.0	0.0	0.0	0.0	0.0	0.0	1.01E-03
	T	9.18E-04	1.06E-03	8.54E-04	9.26E-04	8.98E-04	1.01E-03	8.76E-04	6.84E-04	7.91E-04	7.91E-04	1.92E-03
OVARIES	G	2.71E-04	3.68E-03	6.29E-04	5.18E-03	5.42E-03	9.54E-03	6.14E-04	5.20E-04	1.23E-04	1.23E-04	1.18E-03
	B	0.0	0.0	0.0	0.0	0.0	0.0	0.0	0.0	0.0	0.0	0.0
	T	2.71E-04	3.68E-03	6.29E-04	5.18E-03	5.42E-03	9.54E-03	6.14E-04	5.20E-04	1.23E-04	1.23E-04	1.18E-03

11-SODIUM-24 CONTINUED

SOURCE ORGANS

TARGET ORGANS		ADRENALS	BLAD CON	S CONT	SI+CONT	ULI CONT	LLI CONT	KIDNEYS	LIVER	LUNG	RESP LYM NODE	MUSCLE*
PANCREAS	G	5.02E-03	2.26E-04	9.24E-03	1.16E-03	1.48E-03	4.42E-04	3.53E-03	2.21E-03	1.36E-03	1.36E-03	1.06E-03
	B	0.0	0.0	0.0	0.0	0.0	0.0	0.0	0.0	0.0	0.0	0.0
	T	5.02E-03	2.26E-04	9.24E-03	1.16E-03	1.48E-03	4.42E-04	3.53E-03	2.21E-03	1.36E-03	1.36E-03	1.06E-03
SKELETON BONE	G	7.95E-04	3.54E-04	3.65E-04	4.70E-04	4.23E-04	6.06E-04	5.84E-04	4.50E-04	5.91E-04	5.91E-04	6.93E-04
	B	0.0	0.0	0.0	0.0	0.0	0.0	0.0	0.0	0.0	0.0	0.0
	T	7.95E-04	3.54E-04	3.65E-04	4.70E-04	4.23E-04	6.06E-04	5.84E-04	4.50E-04	5.91E-04	5.91E-04	6.93E-04
R MARROW	G	1.41E-03	7.06E-04	5.93E-04	1.40E-03	1.20E-03	1.73E-03	1.43E-03	6.45E-04	7.49E-04	7.49E-04	7.82E-04
	B	0.0	0.0	0.0	0.0	0.0	0.0	0.0	0.0	0.0	0.0	0.0
	T	1.41E-03	7.06E-04	5.93E-04	1.40E-03	1.20E-03	1.73E-03	1.43E-03	6.45E-04	7.49E-04	7.49E-04	7.82E-04
Y MARROW	G	7.87E-04	3.37E-04	5.12E-04	6.37E-04	5.87E-04	7.42E-04	7.13E-04	6.60E-04	6.16E-04	6.16E-04	6.42E-04
	B	0.0	0.0	0.0	0.0	0.0	0.0	0.0	0.0	0.0	0.0	0.0
	T	7.87E-04	3.37E-04	5.12E-04	6.37E-04	5.87E-04	7.42E-04	7.13E-04	6.60E-04	6.16E-04	6.16E-04	6.42E-04
T E CL	G	7.95E-04	3.54E-04	3.65E-04	4.70E-04	4.23E-04	6.06E-04	5.84E-04	4.50E-04	5.91E-04	5.91E-04	6.93E-04
	B	0.0	0.0	0.0	0.0	0.0	0.0	0.0	0.0	0.0	0.0	0.0
	T	7.95E-04	3.54E-04	3.65E-04	4.70E-04	4.23E-04	6.06E-04	5.84E-04	4.50E-04	5.91E-04	5.91E-04	6.93E-04
SKIN	G	4.52E-04	4.44E-04	4.13E-04	3.73E-04	3.84E-04	4.29E-04	4.40E-04	4.20E-04	4.40E-04	4.40E-04	5.83E-04
	B	0.0	0.0	0.0	0.0	0.0	0.0	0.0	0.0	0.0	0.0	0.0
	T	4.52E-04	4.44E-04	4.13E-04	3.73E-04	3.84E-04	4.29E-04	4.40E-04	4.20E-04	4.40E-04	4.40E-04	5.83E-04
SPLEEN	G	3.42E-03	1.72E-04	5.17E-03	9.96E-04	8.51E-04	6.22E-04	4.59E-03	6.12E-04	1.25E-03	1.25E-03	8.86E-04
	B	0.0	0.0	0.0	0.0	0.0	0.0	0.0	0.0	0.0	0.0	0.0
	T	3.42E-03	1.72E-04	5.17E-03	9.96E-04	8.51E-04	6.22E-04	4.59E-03	6.12E-04	1.25E-03	1.25E-03	8.86E-04
TESTES	G	7.09E-05	2.83E-03	1.23E-04	3.81E-04	3.36E-04	1.08E-03	1.24E-04	1.07E-04	3.27E-05	3.27E-05	8.53E-04
	B	0.0	0.0	0.0	0.0	0.0	0.0	0.0	0.0	0.0	0.0	0.0
	T	7.09E-05	2.83E-03	1.23E-04	3.81E-04	3.36E-04	1.08E-03	1.24E-04	1.07E-04	3.27E-05	3.27E-05	8.53E-04
THYMUS	G	4.30E-04	4.02E-05	3.90E-04	1.16E-04	1.24E-04	5.97E-05	1.57E-04	5.99E-04	2.43E-03	2.43E-03	1.27E-03
	B	0.0	0.0	0.0	0.0	0.0	0.0	0.0	0.0	0.0	0.0	0.0
	T	4.30E-04	4.02E-05	3.90E-04	1.16E-04	1.24E-04	5.97E-05	1.57E-04	5.99E-04	2.43E-03	2.43E-03	1.27E-03
THYROID	G	1.58E-04	1.79E-05	1.24E-04	4.68E-05	4.90E-05	2.65E-05	8.76E-05	1.43E-04	6.31E-04	6.31E-04	8.18E-04
	B	0.0	0.0	0.0	0.0	0.0	0.0	0.0	0.0	0.0	0.0	0.0
	T	1.58E-04	1.79E-05	1.24E-04	4.68E-05	4.90E-05	2.65E-05	8.76E-05	1.43E-04	6.31E-04	6.31E-04	8.18E-04
UTERUS	G	2.43E-04	8.21E-03	6.64E-04	4.67E-03	2.96E-03	3.27E-03	6.23E-04	3.63E-04	1.54E-04	1.54E-04	1.38E-03
	B	0.0	0.0	0.0	0.0	0.0	0.0	0.0	0.0	0.0	0.0	0.0
	T	2.43E-04	8.21E-03	6.64E-04	4.67E-03	2.96E-03	3.27E-03	6.23E-04	3.63E-04	1.54E-04	1.54E-04	1.38E-03
T BODY	G	1.00E-03	1.11E-03	1.05E-03	1.15E-03	1.13E-03	1.13E-03	1.02E-03	1.01E-03	8.54E-04	8.54E-04	8.71E-04
	B	4.05E-04	4.56E-05	1.22E-04	3.24E-04	1.93E-04	2.40E-04	4.05E-04	4.05E-04	4.05E-04	4.05E-04	4.05E-04
	T	1.41E-03	1.15E-03	1.17E-03	1.47E-03	1.32E-03	1.37E-03	1.42E-03	1.41E-03	1.26E-03	1.26E-03	1.28E-03

CONTINUED NEXT PAGE

11-SODIUM-24 CONTINUED

TARGET ORGANS		SOURCE ORGANS										
		OVARIES	PANCREAS	COR BONE	CAN BONE	R MARROW	Y MARROW	SKIN	SPLEEN	TESTES	THYROID	T BODY
ADRENALS	G	3.47E-04	3.96E-03	9.77E-04	9.77E-04	1.33E-03	6.97E-04	5.92E-04	3.76E-03	7.09E-05	1.53E-04	1.31E-03
	B	0.0	0.0	0.0	0.0	0.0	0.0	0.0	0.0	0.0	0.0	4.05E-04
	T	3.47E-04	3.96E-03	9.77E-04	9.77E-04	1.33E-03	6.97E-04	5.92E-04	3.76E-03	7.09E-05	1.53E-04	1.72E-03
BLAD WALL	G	3.76E-03	2.56E-04	4.24E-04	4.24E-04	6.36E-04	3.02E-04	4.67E-04	2.03E-04	2.73E-03	1.79E-05	1.12E-03
	B	0.0	0.0	0.0	0.0	0.0	0.0	0.0	0.0	0.0	0.0	4.05E-04
	T	3.76E-03	2.56E-04	4.24E-04	4.24E-04	6.36E-04	3.02E-04	4.67E-04	2.03E-04	2.73E-03	1.79E-05	1.53E-03
GI TRACT S WALL	G	6.54E-04	9.67E-03	3.61E-04	3.61E-04	6.37E-04	4.94E-04	4.03E-04	5.58E-03	9.22E-05	1.02E-04	9.27E-04
	B	0.0	0.0	0.0	0.0	0.0	0.0	0.0	0.0	0.0	0.0	4.05E-04
	T	6.54E-04	9.67E-03	3.61E-04	3.61E-04	6.37E-04	4.94E-04	4.03E-04	5.58E-03	9.22E-05	1.02E-04	1.33E-03
SI+CONT	G	6.47E-03	1.10E-03	4.85E-04	4.85E-04	1.50E-03	6.42E-04	3.78E-04	8.74E-04	3.72E-04	4.01E-05	1.15E-03
	B	0.0	0.0	0.0	0.0	0.0	0.0	0.0	0.0	0.0	0.0	4.05E-04
	T	6.47E-03	1.10E-03	4.85E-04	4.85E-04	1.50E-03	6.42E-04	3.78E-04	8.74E-04	3.72E-04	4.01E-05	1.55E-03
ULI WALL	G	6.05E-03	1.27E-03	4.66E-04	4.66E-04	1.23E-03	5.83E-04	3.73E-04	8.92E-04	3.63E-04	5.17E-05	1.06E-03
	B	0.0	0.0	0.0	0.0	0.0	0.0	0.0	0.0	0.0	0.0	4.05E-04
	T	6.05E-03	1.27E-03	4.66E-04	4.66E-04	1.23E-03	5.83E-04	3.73E-04	8.92E-04	3.63E-04	5.17E-05	1.47E-03
LLI WALL	G	8.02E-03	3.91E-04	5.96E-04	5.96E-04	1.81E-03	5.87E-04	4.00E-04	4.38E-04	1.58E-03	2.33E-05	1.26E-03
	B	0.0	0.0	0.0	0.0	0.0	0.0	0.0	0.0	0.0	0.0	4.05E-04
	T	8.02E-03	3.91E-04	5.96E-04	5.96E-04	1.81E-03	5.87E-04	4.00E-04	4.38E-04	1.58E-03	2.33E-05	1.66E-03
KIDNEYS	G	7.15E-04	3.51E-03	5.73E-04	5.73E-04	1.55E-03	6.80E-04	4.77E-04	4.79E-03	1.13E-04	9.29E-05	9.83E-04
	B	0.0	0.0	0.0	0.0	0.0	0.0	0.0	0.0	0.0	0.0	4.05E-04
	T	7.15E-04	3.51E-03	5.73E-04	5.73E-04	1.55E-03	6.80E-04	4.77E-04	4.79E-03	1.13E-04	9.29E-05	1.39E-03
LIVER	G	4.46E-04	2.32E-03	4.92E-04	4.92E-04	6.47E-04	6.81E-04	4.41E-04	6.80E-04	8.49E-05	1.68E-04	1.01E-03
	B	0.0	0.0	0.0	0.0	0.0	0.0	0.0	0.0	0.0	0.0	4.05E-04
	T	4.46E-04	2.32E-03	4.92E-04	4.92E-04	6.47E-04	6.81E-04	4.41E-04	6.80E-04	8.49E-05	1.68E-04	1.42E-03
LUNGS	G	1.28E-04	1.34E-03	6.10E-04	6.10E-04	7.37E-04	6.10E-04	4.57E-04	1.28E-03	2.96E-05	6.93E-04	8.15E-04
	B	0.0	0.0	0.0	0.0	0.0	0.0	0.0	0.0	0.0	0.0	4.05E-04
	T	1.28E-04	1.34E-03	6.10E-04	6.10E-04	7.37E-04	6.10E-04	4.57E-04	1.28E-03	2.96E-05	6.93E-04	1.22E-03
RESP LYM NODE	G	1.28E-04	1.34E-03	6.10E-04	6.10E-04	7.37E-04	6.10E-04	4.57E-04	1.28E-03	2.96E-05	6.93E-04	8.15E-04
	B	0.0	0.0	0.0	0.0	0.0	0.0	0.0	0.0	0.0	0.0	4.05E-04
	T	1.28E-04	1.34E-03	6.10E-04	6.10E-04	7.37E-04	6.10E-04	4.57E-04	1.28E-03	2.96E-05	6.93E-04	1.22E-03
MUSCLE*	G	1.18E-03	1.06E-03	6.93E-04	6.93E-04	7.99E-04	6.32E-04	5.83E-04	8.86E-04	8.53E-04	8.18E-04	8.71E-04
	B	0.0	0.0	0.0	0.0	0.0	0.0	0.0	0.0	0.0	0.0	4.05E-04
	T	1.18E-03	1.06E-03	6.93E-04	6.93E-04	7.99E-04	6.32E-04	5.83E-04	8.86E-04	8.53E-04	8.18E-04	1.28E-03
OVARIES	G	4.39E-01	4.87E-04	5.62E-04	5.62E-04	1.89E-03	5.73E-04	3.78E-04	1.79E-04	0.0	2.74E-05	1.30E-03
	B	2.58E 00	0.0	0.0	0.0	0.0	0.0	0.0	0.0	0.0	0.0	4.05E-04
	T	3.02E 00	4.87E-04	5.62E-04	5.62E-04	1.89E-03	5.73E-04	3.78E-04	1.79E-04	0.0	2.74E-05	1.70E-03

11-SODIUM-24 CONTINUED

TARGET ORGANS		SOURCE ORGANS										
		OVARIES	PANCREAS	COR BONE	CAN BONE	R MARROW	Y MARROW	SKIN	SPLEEN	TESTES	THYROID	T BODY
PANCREAS	G	3.77E-04	1.20E-01	6.44E-04	6.44E-04	8.00E-04	5.47E-04	3.58E-04	1.00E-02	1.09E-04	1.78E-04	1.29E-03
	B	0.0	2.84E-01	0.0	0.0	0.0	0.0	0.0	0.0	0.0	0.0	4.05E-04
	T	3.77E-04	4.03E-01	6.44E-04	6.44E-04	8.00E-04	5.47E-04	3.58E-04	1.00E-02	1.09E-04	1.78E-04	1.69E-03
SKELETON BONE	G	5.35E-04	5.39E-04	1.96E-03	1.96E-03	1.33E-03	1.49E-03	5.30E-04	4.62E-04	4.05E-04	4.64E-04	8.59E-04
	B	0.0	0.0	5.67E-03	3.32E-03	1.57E-03	0.0	0.0	0.0	0.0	0.0	4.05E-04
	T	5.35E-04	5.39E-04	7.63E-03	5.28E-03	2.90E-03	1.49E-03	5.30E-04	4.62E-04	4.05E-04	4.64E-04	1.26E-03
R MARROW	G	1.65E-03	9.87E-04	1.77E-03	1.77E-03	4.17E-03	1.50E-03	4.96E-04	6.70E-04	3.25E-04	5.09E-04	9.39E-04
	B	0.0	0.0	2.93E-04	7.85E-03	1.37E-02	0.0	0.0	0.0	0.0	0.0	4.05E-04
	T	1.65E-03	9.87E-04	2.06E-03	9.62E-03	1.78E-02	1.50E-03	4.96E-04	6.70E-04	3.25E-04	5.09E-04	1.34E-03
Y MARROW	G	6.93E-04	6.34E-04	1.69E-03	1.69E-03	1.64E-03	2.52E-03	5.64E-04	6.81E-04	2.01E-04	2.65E-04	7.98E-04
	B	0.0	0.0	0.0	0.0	0.0	1.89E-02	0.0	0.0	0.0	0.0	4.05E-04
	T	6.93E-04	6.34E-04	1.69E-03	1.69E-03	1.64E-03	2.14E-02	5.64E-04	6.81E-04	2.01E-04	2.65E-04	1.20E-03
T E CL	G	5.35E-04	5.39E-04	1.96E-03	1.96E-03	1.78E-03	1.64E-03	5.30E-04	4.62E-04	4.05E-04	4.64E-04	8.59E-04
	B	0.0	0.0	3.64E-03	5.81E-03	5.58E-03	4.73E-03	0.0	0.0	0.0	0.0	4.05E-04
	T	5.35E-04	5.39E-04	5.60E-03	7.77E-03	7.36E-03	6.36E-03	5.30E-04	4.62E-04	4.05E-04	4.64E-04	1.26E-03
SKIN	G	3.43E-04	3.59E-04	5.60E-04	5.60E-04	4.91E-04	6.05E-04	1.24E-03	3.92E-04	9.71E-04	5.80E-04	5.95E-04
	B	0.0	0.0	0.0	0.0	0.0	0.0	1.09E-02	0.0	0.0	0.0	4.05E-04
	T	3.43E-04	3.59E-04	5.60E-04	5.60E-04	4.91E-04	6.05E-04	1.21E-02	3.92E-04	9.71E-04	5.80E-04	1.00E-03
SPLEEN	G	4.48E-04	1.03E-02	4.15E-04	4.15E-04	6.65E-04	7.71E-04	3.99E-04	7.26E-02	7.88E-05	1.21E-04	9.09E-04
	B	0.0	0.0	0.0	0.0	0.0	0.0	0.0	1.58E-01	0.0	0.0	4.05E-04
	T	4.48E-04	1.03E-02	4.15E-04	4.15E-04	6.65E-04	7.71E-04	3.99E-04	2.30E-01	7.88E-05	1.21E-04	1.31E-03
TESTES	G	0.0	9.53E-05	6.17E-04	6.17E-04	2.73E-04	5.39E-04	6.46E-04	8.80E-05	2.02E-01	9.29E-06	9.89E-04
	B	0.0	0.0	0.0	0.0	0.0	0.0	0.0	0.0	8.10E-01	0.0	4.05E-04
	T	0.0	9.53E-05	6.17E-04	6.17E-04	2.73E-04	5.39E-04	6.46E-04	8.80E-05	1.01E 00	9.29E-06	1.39E-03
THYMUS	G	6.36E-05	4.17E-04	4.63E-04	4.63E-04	6.80E-04	5.25E-04	4.96E-04	3.30E-04	1.98E-05	2.69E-03	1.11E-03
	B	0.0	0.0	0.0	0.0	0.0	0.0	0.0	0.0	0.0	0.0	4.05E-04
	T	6.36E-05	4.17E-04	4.63E-04	4.63E-04	6.80E-04	5.25E-04	4.96E-04	3.30E-04	1.98E-05	2.69E-03	1.52E-03
THYROID	G	2.74E-05	1.36E-04	3.44E-04	3.44E-04	5.24E-04	5.41E-04	5.27E-04	1.22E-04	9.28E-06	2.74E-01	9.26E-04
	B	0.0	0.0	0.0	0.0	0.0	0.0	0.0	0.0	0.0	1.42E 00	4.05E-04
	T	2.74E-05	1.36E-04	3.44E-04	3.44E-04	5.24E-04	5.41E-04	5.27E-04	1.22E-04	9.28E-06	1.69E 00	1.33E-03
UTERUS	G	9.75E-03	3.89E-04	3.86E-04	3.86E-04	8.90E-04	5.22E-04	4.25E-04	3.44E-04	0.0	2.64E-05	1.24E-03
	B	0.0	0.0	0.0	0.0	0.0	0.0	0.0	0.0	0.0	0.0	4.05E-04
	T	9.75E-03	3.89E-04	3.86E-04	3.86E-04	8.90E-04	5.22E-04	4.25E-04	3.44E-04	0.0	2.64E-05	1.65E-03
T BODY	G	1.17E-03	1.15E-03	8.67E-04	8.67E-04	9.55E-04	7.74E-04	5.83E-04	1.00E-03	8.76E-04	7.86E-04	8.64E-04
	B	4.05E-04	4.05E-04	4.05E-04	4.05E-04	4.05E-04	4.05E-04	4.05E-04	4.05E-04	4.05E-04	4.05E-04	4.05E-04
	T	1.58E-03	1.55E-03	1.27E-03	1.27E-03	1.36E-03	1.18E-03	9.88E-04	1.41E-03	1.28E-03	1.19E-03	1.27E-03

*"MUSCLE" VALUES MAY BE USED FOR "SEPARABLE FAT" WITH ADJUSTMENT (SEE TEXT)
PRINCIPLE REFERENCE-ENDT, P. M. AND VAN DER LEUN, C., NUCL. PHYS. A105, 261 (1967)
DATE DECAY DATA REVIEWED-OCTOBER 1973

S, AVERAGE DOSE EQUIVALENT PER UNIT ACCUMULATED ACTIVITY (REM/UCI-DAY), FOR 15-PHOSPHORUS-32 (TR=1.431E 01 DAYS)

DATE OF TABLE 11-27-74

TARGET ORGANS		SOURCE ORGANS										
		ADRENALS	BLAD CON	S CONT	SI+CONT	ULI CONT	LLI CONT	KIDNEYS	LIVER	LUNG	RESP LYM NODE	MUSCLE*
ADRENALS	B	2.54E 00	0.0	0.0	0.0	0.0	0.0	0.0	0.0	0.0	0.0	0.0
	T	2.54E 00	0.0	0.0	0.0	0.0	0.0	0.0	0.0	0.0	0.0	0.0
BLAD WALL	B	0.0	8.88E-02	0.0	0.0	0.0	0.0	0.0	0.0	0.0	0.0	0.0
	T	0.0	8.88E-02	0.0	0.0	0.0	0.0	0.0	0.0	0.0	0.0	0.0
GI TRACT S WALL	B	0.0	0.0	7.11E-02	0.0	0.0	0.0	0.0	0.0	0.0	0.0	0.0
	T	0.0	0.0	7.11E-02	0.0	0.0	0.0	0.0	0.0	0.0	0.0	0.0
SI+CONT	B	0.0	0.0	0.0	4.44E-02	0.0	0.0	0.0	0.0	0.0	0.0	0.0
	T	0.0	0.0	0.0	4.44E-02	0.0	0.0	0.0	0.0	0.0	0.0	0.0
ULI WALL	B	0.0	0.0	0.0	0.0	8.08E-02	0.0	0.0	0.0	0.0	0.0	0.0
	T	0.0	0.0	0.0	0.0	8.08E-02	0.0	0.0	0.0	0.0	0.0	0.0
LLI WALL	B	0.0	0.0	0.0	0.0	0.0	1.32E-01	0.0	0.0	0.0	0.0	0.0
	T	0.0	0.0	0.0	0.0	0.0	1.32E-01	0.0	0.0	0.0	0.0	0.0
KIDNEYS	B	0.0	0.0	0.0	0.0	0.0	0.0	1.15E-01	0.0	0.0	0.0	0.0
	T	0.0	0.0	0.0	0.0	0.0	0.0	1.15E-01	0.0	0.0	0.0	0.0
LIVER	B	0.0	0.0	0.0	0.0	0.0	0.0	0.0	1.97E-02	0.0	0.0	0.0
	T	0.0	0.0	0.0	0.0	0.0	0.0	0.0	1.97E-02	0.0	0.0	0.0
LUNGS	B	0.0	0.0	0.0	0.0	0.0	0.0	0.0	0.0	3.55E-02	3.55E-02	0.0
	T	0.0	0.0	0.0	0.0	0.0	0.0	0.0	0.0	3.55E-02	3.55E-02	0.0
RESP LYM NODE	B	0.0	0.0	0.0	0.0	0.0	0.0	0.0	0.0	3.55E-02	2.37E 00	0.0
	T	0.0	0.0	0.0	0.0	0.0	0.0	0.0	0.0	3.55E-02	2.37E 00	0.0
MUSCLE*	B	0.0	0.0	0.0	0.0	0.0	0.0	0.0	0.0	0.0	0.0	1.27E-03
	T	0.0	0.0	0.0	0.0	0.0	0.0	0.0	0.0	0.0	0.0	1.27E-03
OVARIES	B	0.0	0.0	0.0	0.0	0.0	0.0	0.0	0.0	0.0	0.0	0.0
	T	0.0	0.0	0.0	0.0	0.0	0.0	0.0	0.0	0.0	0.0	0.0

15-PHOSPHORUS-32 CONTINUED

SOURCE ORGANS

TARGET ORGANS		ADRENALS	BLAD CON	S CONT	SI+CONT	ULI CONT	LLI CONT	KIDNEYS	LIVER	LUNG	RESP LYM NODE	MUSCLE*
PANCREAS	B	0.0	0.0	0.0	0.0	0.0	0.0	0.0	0.0	0.0	0.0	0.0
	T	0.0	0.0	0.0	0.0	0.0	0.0	0.0	0.0	0.0	0.0	0.0
SKELETON BONE	B	0.0	0.0	0.0	0.0	0.0	0.0	0.0	0.0	0.0	0.0	0.0
	T	0.0	0.0	0.0	0.0	0.0	0.0	0.0	0.0	0.0	0.0	0.0
R MARROW	B	0.0	0.0	0.0	0.0	0.0	0.0	0.0	0.0	0.0	0.0	0.0
	T	0.0	0.0	0.0	0.0	0.0	0.0	0.0	0.0	0.0	0.0	0.0
Y MARROW	B	0.0	0.0	0.0	0.0	0.0	0.0	0.0	0.0	0.0	0.0	0.0
	T	0.0	0.0	0.0	0.0	0.0	0.0	0.0	0.0	0.0	0.0	0.0
T E CL	B	0.0	0.0	0.0	0.0	0.0	0.0	0.0	0.0	0.0	0.0	0.0
	T	0.0	0.0	0.0	0.0	0.0	0.0	0.0	0.0	0.0	0.0	0.0
SKIN	B	0.0	0.0	0.0	0.0	0.0	0.0	0.0	0.0	0.0	0.0	0.0
	T	0.0	0.0	0.0	0.0	0.0	0.0	0.0	0.0	0.0	0.0	0.0
SPLEEN	B	0.0	0.0	0.0	0.0	0.0	0.0	0.0	0.0	0.0	0.0	0.0
	T	0.0	0.0	0.0	0.0	0.0	0.0	0.0	0.0	0.0	0.0	0.0
TESTES	B	0.0	0.0	0.0	0.0	0.0	0.0	0.0	0.0	0.0	0.0	0.0
	T	0.0	0.0	0.0	0.0	0.0	0.0	0.0	0.0	0.0	0.0	0.0
THYMUS	B	0.0	0.0	0.0	0.0	0.0	0.0	0.0	0.0	0.0	0.0	0.0
	T	0.0	0.0	0.0	0.0	0.0	0.0	0.0	0.0	0.0	0.0	0.0
THYROID	B	0.0	0.0	0.0	0.0	0.0	0.0	0.0	0.0	0.0	0.0	0.0
	T	0.0	0.0	0.0	0.0	0.0	0.0	0.0	0.0	0.0	0.0	0.0
UTERUS	B	0.0	0.0	0.0	0.0	0.0	0.0	0.0	0.0	0.0	0.0	0.0
	T	0.0	0.0	0.0	0.0	0.0	0.0	0.0	0.0	0.0	0.0	0.0
T BODY	B	5.08E-04	5.71E-05	1.52E-04	4.06E-04	2.42E-04	3.01E-04	5.08E-04	5.08E-04	5.08E-04	5.08E-04	5.08E-04
	T	5.08E-04	5.71E-05	1.52E-04	4.06E-04	2.42E-04	3.01E-04	5.08E-04	5.08E-04	5.08E-04	5.08E-04	5.08E-04

CONTINUED NEXT PAGE

15-PHOSPHORUS-32 CONTINUED

SOURCE ORGANS

TARGET ORGANS		OVARIES	PANCREAS	COR BONE	CAN BONE	R MARROW	Y MARROW	SKIN	SPLEEN	TESTES	THYROID	T BODY
ADRENALS	B	0.0	0.0	0.0	0.0	0.0	0.0	0.0	0.0	0.0	0.0	5.08E-04
	T	0.0	0.0	0.0	0.0	0.0	0.0	0.0	0.0	0.0	0.0	5.08E-04
BLAD WALL	B	0.0	0.0	0.0	0.0	0.0	0.0	0.0	0.0	0.0	0.0	5.08E-04
	T	0.0	0.0	0.0	0.0	0.0	0.0	0.0	0.0	0.0	0.0	5.08E-04
GI TRACT S WALL	B	0.0	0.0	0.0	0.0	0.0	0.0	0.0	0.0	0.0	0.0	5.08E-04
	T	0.0	0.0	0.0	0.0	0.0	0.0	0.0	0.0	0.0	0.0	5.08E-04
SI+CONT	B	0.0	0.0	0.0	0.0	0.0	0.0	0.0	0.0	0.0	0.0	5.08E-04
	T	0.0	0.0	0.0	0.0	0.0	0.0	0.0	0.0	0.0	0.0	5.08E-04
ULI WALL	B	0.0	0.0	0.0	0.0	0.0	0.0	0.0	0.0	0.0	0.0	5.08E-04
	T	0.0	0.0	0.0	0.0	0.0	0.0	0.0	0.0	0.0	0.0	5.08E-04
LLI WALL	B	0.0	0.0	0.0	0.0	0.0	0.0	0.0	0.0	0.0	0.0	5.08E-04
	T	0.0	0.0	0.0	0.0	0.0	0.0	0.0	0.0	0.0	0.0	5.08E-04
KIDNEYS	B	0.0	0.0	0.0	0.0	0.0	0.0	0.0	0.0	0.0	0.0	5.08E-04
	T	0.0	0.0	0.0	0.0	0.0	0.0	0.0	0.0	0.0	0.0	5.08E-04
LIVER	B	0.0	0.0	0.0	0.0	0.0	0.0	0.0	0.0	0.0	0.0	5.08E-04
	T	0.0	0.0	0.0	0.0	0.0	0.0	0.0	0.0	0.0	0.0	5.08E-04
LUNGS	B	0.0	0.0	0.0	0.0	0.0	0.0	0.0	0.0	0.0	0.0	5.08E-04
	T	0.0	0.0	0.0	0.0	0.0	0.0	0.0	0.0	0.0	0.0	5.08E-04
RESP LYM NODE	B	0.0	0.0	0.0	0.0	0.0	0.0	0.0	0.0	0.0	0.0	5.08E-04
	T	0.0	0.0	0.0	0.0	0.0	0.0	0.0	0.0	0.0	0.0	5.08E-04
MUSCLE*	B	0.0	0.0	0.0	0.0	0.0	0.0	0.0	0.0	0.0	0.0	5.08E-04
	T	0.0	0.0	0.0	0.0	0.0	0.0	0.0	0.0	0.0	0.0	5.08E-04
OVARIES	B	3.23E 00	0.0	0.0	0.0	0.0	0.0	0.0	0.0	0.0	0.0	5.08E-04
	T	3.23E 00	0.0	0.0	0.0	0.0	0.0	0.0	0.0	0.0	0.0	5.08E-04

15-PHOSPHORUS-32 CONTINUED

TARGET ORGANS		SOURCE ORGANS										
		OVARIES	PANCREAS	COR BONE	CAN BONE	R MARROW	Y MARROW	SKIN	SPLEEN	TESTES	THYROID	T BODY
PANCREAS	B	0.0	3.55E-01	0.0	0.0	0.0	0.0	0.0	0.0	0.0	0.0	5.08E-04
	T	0.0	3.55E-01	0.0	0.0	0.0	0.0	0.0	0.0	0.0	0.0	5.08E-04
SKELETON BONE	B	0.0	0.0	7.11E-03	3.98E-03	2.09E-03	0.0	0.0	0.0	0.0	0.0	5.08E-04
	T	0.0	0.0	7.11E-03	3.98E-03	2.09E-03	0.0	0.0	0.0	0.0	0.0	5.08E-04
R MARROW	B	0.0	0.0	4.68E-04	1.04E-02	1.67E-02	0.0	0.0	0.0	0.0	0.0	5.08E-04
	T	0.0	0.0	4.68E-04	1.04E-02	1.67E-02	0.0	0.0	0.0	0.0	0.0	5.08E-04
Y MARROW	B	0.0	0.0	0.0	0.0	0.0	2.37E-02	0.0	0.0	0.0	0.0	5.08E-04
	T	0.0	0.0	0.0	0.0	0.0	2.37E-02	0.0	0.0	0.0	0.0	5.08E-04
T E CL	B	0.0	0.0	4.55E-03	6.89E-03	7.25E-03	5.92E-03	0.0	0.0	0.0	0.0	5.08E-04
	T	0.0	0.0	4.55E-03	6.89E-03	7.25E-03	5.92E-03	0.0	0.0	0.0	0.0	5.08E-04
SKIN	B	0.0	0.0	0.0	0.0	0.0	0.0	1.37E-02	0.0	0.0	0.0	5.08E-04
	T	0.0	0.0	0.0	0.0	0.0	0.0	1.37E-02	0.0	0.0	0.0	5.08E-04
SPLEEN	B	0.0	0.0	0.0	0.0	0.0	0.0	0.0	1.97E-01	0.0	0.0	5.08E-04
	T	0.0	0.0	0.0	0.0	0.0	0.0	0.0	1.97E-01	0.0	0.0	5.08E-04
TESTES	B	0.0	0.0	0.0	0.0	0.0	0.0	0.0	0.0	1.02E 00	0.0	5.08E-04
	T	0.0	0.0	0.0	0.0	0.0	0.0	0.0	0.0	1.02E 00	0.0	5.08E-04
THYMUS	B	0.0	0.0	0.0	0.0	0.0	0.0	0.0	0.0	0.0	0.0	5.08E-04
	T	0.0	0.0	0.0	0.0	0.0	0.0	0.0	0.0	0.0	0.0	5.08E-04
THYROID	B	0.0	0.0	0.0	0.0	0.0	0.0	0.0	0.0	0.0	1.78E 00	5.08E-04
	T	0.0	0.0	0.0	0.0	0.0	0.0	0.0	0.0	0.0	1.78E 00	5.08E-04
UTERUS	B	0.0	0.0	0.0	0.0	0.0	0.0	0.0	0.0	0.0	0.0	5.08E-04
	T	0.0	0.0	0.0	0.0	0.0	0.0	0.0	0.0	0.0	0.0	5.08E-04
T BODY	B	5.08E-04	5.08E-04	5.08E-04	5.08E-04	5.08E-04	5.08E-04	5.08E-04	5.08E-04	5.08E-04	5.08E-04	5.08E-04
	T	5.08E-04	5.08E-04	5.08E-04	5.08E-04	5.08E-04	5.08E-04	5.08E-04	5.08E-04	5.08E-04	5.08E-04	5.08E-04

*"MUSCLE" VALUES MAY BE USED FOR "SEPARABLE FAT" WITH ADJUSTMENT (SEE TEXT)
PRINCIPLE REFERENCE-ENDT, P. M. AND VAN DER LEUN, C., NUCL. PHYS. A105, 261 (1967)
DATE DECAY DATA REVIEWED-AUGUST 1973

S, AVERAGE DOSE EQUIVALENT PER UNIT ACCUMULATED ACTIVITY (REM/UCI-DAY), FOR 16-SULPHUR-35 (TR=8.700E 01 DAYS)

DATE OF TABLE 11-27-74

TARGET ORGANS		SOURCE ORGANS										
		ADRENALS	BLAD CON	S CONT	SI+CONT	ULI CONT	LLI CONT	KIDNEYS	LIVER	LUNG	RESP LYM NODE	MUSCLE*
ADRENALS	B	1.78E-01	0.0	0.0	0.0	0.0	0.0	0.0	0.0	0.0	0.0	0.0
	T	1.78E-01	0.0	0.0	0.0	0.0	0.0	0.0	0.0	0.0	0.0	0.0
BLAD WALL	B	0.0	6.24E-03	0.0	0.0	0.0	0.0	0.0	0.0	0.0	0.0	0.0
	T	0.0	6.24E-03	0.0	0.0	0.0	0.0	0.0	0.0	0.0	0.0	0.0
GI TRACT S WALL	B	0.0	0.0	4.99E-03	0.0	0.0	0.0	0.0	0.0	0.0	0.0	0.0
	T	0.0	0.0	4.99E-03	0.0	0.0	0.0	0.0	0.0	0.0	0.0	0.0
SI+CONT	B	0.0	0.0	0.0	3.12E-03	0.0	0.0	0.0	0.0	0.0	0.0	0.0
	T	0.0	0.0	0.0	3.12E-03	0.0	0.0	0.0	0.0	0.0	0.0	0.0
ULI WALL	B	0.0	0.0	0.0	0.0	5.67E-03	0.0	0.0	0.0	0.0	0.0	0.0
	T	0.0	0.0	0.0	0.0	5.67E-03	0.0	0.0	0.0	0.0	0.0	0.0
LLI WALL	B	0.0	0.0	0.0	0.0	0.0	9.25E-03	0.0	0.0	0.0	0.0	0.0
	T	0.0	0.0	0.0	0.0	0.0	9.25E-03	0.0	0.0	0.0	0.0	0.0
KIDNEYS	B	0.0	0.0	0.0	0.0	0.0	0.0	8.05E-03	0.0	0.0	0.0	0.0
	T	0.0	0.0	0.0	0.0	0.0	0.0	8.05E-03	0.0	0.0	0.0	0.0
LIVER	B	0.0	0.0	0.0	0.0	0.0	0.0	0.0	1.39E-03	0.0	0.0	0.0
	T	0.0	0.0	0.0	0.0	0.0	0.0	0.0	1.39E-03	0.0	0.0	0.0
LUNGS	B	0.0	0.0	0.0	0.0	0.0	0.0	0.0	0.0	2.50E-03	2.50E-03	0.0
	T	0.0	0.0	0.0	0.0	0.0	0.0	0.0	0.0	2.50E-03	2.50E-03	0.0
RESP LYM NODE	B	0.0	0.0	0.0	0.0	0.0	0.0	0.0	0.0	2.50E-03	1.66E-01	0.0
	T	0.0	0.0	0.0	0.0	0.0	0.0	0.0	0.0	2.50E-03	1.66E-01	0.0
MUSCLE*	B	0.0	0.0	0.0	0.0	0.0	0.0	0.0	0.0	0.0	0.0	8.92E-05
	T	0.0	0.0	0.0	0.0	0.0	0.0	0.0	0.0	0.0	0.0	8.92E-05
OVARIES	B	0.0	0.0	0.0	0.0	0.0	0.0	0.0	0.0	0.0	0.0	0.0
	T	0.0	0.0	0.0	0.0	0.0	0.0	0.0	0.0	0.0	0.0	0.0

16-SULPHUR-35 CONTINUED

SOURCE ORGANS

TARGET ORGANS		ADRENALS	BLAD CON	S CONT	SI+CONT	ULI CONT	LLI CONT	KIDNEYS	LIVER	LUNG	RESP LYM NODE	MUSCLE*
PANCREAS	B	0.0	0.0	0.0	0.0	0.0	0.0	0.0	0.0	0.0	0.0	0.0
	T	0.0	0.0	0.0	0.0	0.0	0.0	0.0	0.0	0.0	0.0	0.0
SKELETON BONE	B	0.0	0.0	0.0	0.0	0.0	0.0	0.0	0.0	0.0	0.0	0.0
	T	0.0	0.0	0.0	0.0	0.0	0.0	0.0	0.0	0.0	0.0	0.0
R MARROW	B	0.0	0.0	0.0	0.0	0.0	0.0	0.0	0.0	0.0	0.0	0.0
	T	0.0	0.0	0.0	0.0	0.0	0.0	0.0	0.0	0.0	0.0	0.0
Y MARROW	B	0.0	0.0	0.0	0.0	0.0	0.0	0.0	0.0	0.0	0.0	0.0
	T	0.0	0.0	0.0	0.0	0.0	0.0	0.0	0.0	0.0	0.0	0.0
T E CL	B	0.0	0.0	0.0	0.0	0.0	0.0	0.0	0.0	0.0	0.0	0.0
	T	0.0	0.0	0.0	0.0	0.0	0.0	0.0	0.0	0.0	0.0	0.0
SKIN	B	0.0	0.0	0.0	0.0	0.0	0.0	0.0	0.0	0.0	0.0	0.0
	T	0.0	0.0	0.0	0.0	0.0	0.0	0.0	0.0	0.0	0.0	0.0
SPLEEN	B	0.0	0.0	0.0	0.0	0.0	0.0	0.0	0.0	0.0	0.0	0.0
	T	0.0	0.0	0.0	0.0	0.0	0.0	0.0	0.0	0.0	0.0	0.0
TESTES	B	0.0	0.0	0.0	0.0	0.0	0.0	0.0	0.0	0.0	0.0	0.0
	T	0.0	0.0	0.0	0.0	0.0	0.0	0.0	0.0	0.0	0.0	0.0
THYMUS	B	0.0	0.0	0.0	0.0	0.0	0.0	0.0	0.0	0.0	0.0	0.0
	T	0.0	0.0	0.0	0.0	0.0	0.0	0.0	0.0	0.0	0.0	0.0
THYROID	B	0.0	0.0	0.0	0.0	0.0	0.0	0.0	0.0	0.0	0.0	0.0
	T	0.0	0.0	0.0	0.0	0.0	0.0	0.0	0.0	0.0	0.0	0.0
UTERUS	B	0.0	0.0	0.0	0.0	0.0	0.0	0.0	0.0	0.0	0.0	0.0
	T	0.0	0.0	0.0	0.0	0.0	0.0	0.0	0.0	0.0	0.0	0.0
T BODY	B	3.57E-05	4.01E-06	1.07E-05	2.85E-05	1.70E-05	2.11E-05	3.57E-05	3.57E-05	3.57E-05	3.57E-05	3.57E-05
	T	3.57E-05	4.01E-06	1.07E-05	2.85E-05	1.70E-05	2.11E-05	3.57E-05	3.57E-05	3.57E-05	3.57E-05	3.57E-05

CONTINUED NEXT PAGE

16-SULPHUR-35 CONTINUED

TARGET ORGANS		SOURCE ORGANS										
		OVARIES	PANCREAS	COR BONE	CAN BONE	R MARROW	Y MARROW	SKIN	SPLEEN	TESTES	THYROID	T BODY
ADRENALS	B	0.0	0.0	0.0	0.0	0.0	0.0	0.0	0.0	0.0	0.0	3.57E-05
	T	0.0	0.0	0.0	0.0	0.0	0.0	0.0	0.0	0.0	0.0	3.57E-05
BLAD WALL	B	0.0	0.0	0.0	0.0	0.0	0.0	0.0	0.0	0.0	0.0	3.57E-05
	T	0.0	0.0	0.0	0.0	0.0	0.0	0.0	0.0	0.0	0.0	3.57E-05
GI TRACT S WALL	B	0.0	0.0	0.0	0.0	0.0	0.0	0.0	0.0	0.0	0.0	3.57E-05
	T	0.0	0.0	0.0	0.0	0.0	0.0	0.0	0.0	0.0	0.0	3.57E-05
SI+CONT	B	0.0	0.0	0.0	0.0	0.0	0.0	0.0	0.0	0.0	0.0	3.57E-05
	T	0.0	0.0	0.0	0.0	0.0	0.0	0.0	0.0	0.0	0.0	3.57E-05
ULI WALL	B	0.0	0.0	0.0	0.0	0.0	0.0	0.0	0.0	0.0	0.0	3.57E-05
	T	0.0	0.0	0.0	0.0	0.0	0.0	0.0	0.0	0.0	0.0	3.57E-05
LLI WALL	B	0.0	0.0	0.0	0.0	0.0	0.0	0.0	0.0	0.0	0.0	3.57E-05
	T	0.0	0.0	0.0	0.0	0.0	0.0	0.0	0.0	0.0	0.0	3.57E-05
KIDNEYS	B	0.0	0.0	0.0	0.0	0.0	0.0	0.0	0.0	0.0	0.0	3.57E-05
	T	0.0	0.0	0.0	0.0	0.0	0.0	0.0	0.0	0.0	0.0	3.57E-05
LIVER	B	0.0	0.0	0.0	0.0	0.0	0.0	0.0	0.0	0.0	0.0	3.57E-05
	T	0.0	0.0	0.0	0.0	0.0	0.0	0.0	0.0	0.0	0.0	3.57E-05
LUNGS	B	0.0	0.0	0.0	0.0	0.0	0.0	0.0	0.0	0.0	0.0	3.57E-05
	T	0.0	0.0	0.0	0.0	0.0	0.0	0.0	0.0	0.0	0.0	3.57E-05
RESP LYM NODE	B	0.0	0.0	0.0	0.0	0.0	0.0	0.0	0.0	0.0	0.0	3.57E-05
	T	0.0	0.0	0.0	0.0	0.0	0.0	0.0	0.0	0.0	0.0	3.57E-05
MUSCLE*	B	0.0	0.0	0.0	0.0	0.0	0.0	0.0	0.0	0.0	0.0	3.57E-05
	T	0.0	0.0	0.0	0.0	0.0	0.0	0.0	0.0	0.0	0.0	3.57E-05
OVARIES	B	2.27E-01	0.0	0.0	0.0	0.0	0.0	0.0	0.0	0.0	0.0	3.57E-05
	T	2.27E-01	0.0	0.0	0.0	0.0	0.0	0.0	0.0	0.0	0.0	3.57E-05

16-SULPHUR-35 CONTINUED

TARGET ORGANS		SOURCE ORGANS										
		OVARIES	PANCREAS	COR BONE	CAN BONE	R MARROW	Y MARROW	SKIN	SPLEEN	TESTES	THYROID	T BODY
PANCREAS	B	0.0	2.50E-02	0.0	0.0	0.0	0.0	0.0	0.0	0.0	0.0	3.57E-05
	T	0.0	2.50E-02	0.0	0.0	0.0	0.0	0.0	0.0	0.0	0.0	3.57E-05
SKELETON BONE	B	0.0	0.0	4.99E-04	4.56E-04	2.90E-05	0.0	0.0	0.0	0.0	0.0	3.57E-05
	T	0.0	0.0	4.99E-04	4.56E-04	2.90E-05	0.0	0.0	0.0	0.0	0.0	3.57E-05
R MARROW	B	0.0	0.0	1.14E-06	1.45E-04	1.57E-03	0.0	0.0	0.0	0.0	0.0	3.57E-05
	T	0.0	0.0	1.14E-06	1.45E-04	1.57E-03	0.0	0.0	0.0	0.0	0.0	3.57E-05
Y MARROW	B	0.0	0.0	0.0	0.0	0.0	1.66E-03	0.0	0.0	0.0	0.0	3.57E-05
	T	0.0	0.0	0.0	0.0	0.0	1.66E-03	0.0	0.0	0.0	0.0	3.57E-05
T E CL	B	0.0	0.0	2.41E-04	5.05E-04	4.96E-04	4.16E-04	0.0	0.0	0.0	0.0	3.57E-05
	T	0.0	0.0	2.41E-04	5.05E-04	4.96E-04	4.16E-04	0.0	0.0	0.0	0.0	3.57E-05
SKIN	B	0.0	0.0	0.0	0.0	0.0	0.0	9.60E-04	0.0	0.0	0.0	3.57E-05
	T	0.0	0.0	0.0	0.0	0.0	0.0	9.60E-04	0.0	0.0	0.0	3.57E-05
SPLEEN	B	0.0	0.0	0.0	0.0	0.0	0.0	0.0	1.39E-02	0.0	0.0	3.57E-05
	T	0.0	0.0	0.0	0.0	0.0	0.0	0.0	1.39E-02	0.0	0.0	3.57E-05
TESTES	B	0.0	0.0	0.0	0.0	0.0	0.0	0.0	0.0	7.13E-02	0.0	3.57E-05
	T	0.0	0.0	0.0	0.0	0.0	0.0	0.0	0.0	7.13E-02	0.0	3.57E-05
THYMUS	B	0.0	0.0	0.0	0.0	0.0	0.0	0.0	0.0	0.0	0.0	3.57E-05
	T	0.0	0.0	0.0	0.0	0.0	0.0	0.0	0.0	0.0	0.0	3.57E-05
THYROID	B	0.0	0.0	0.0	0.0	0.0	0.0	0.0	0.0	0.0	1.25E-01	3.57E-05
	T	0.0	0.0	0.0	0.0	0.0	0.0	0.0	0.0	0.0	1.25E-01	3.57E-05
UTERUS	B	0.0	0.0	0.0	0.0	0.0	0.0	0.0	0.0	0.0	0.0	3.57E-05
	T	0.0	0.0	0.0	0.0	0.0	0.0	0.0	0.0	0.0	0.0	3.57E-05
T BODY	B	3.57E-05	3.57E-05	3.57E-05	3.57E-05	3.57E-05	3.57E-05	3.57E-05	3.57E-05	3.57E-05	3.57E-05	3.57E-05
	T	3.57E-05	3.57E-05	3.57E-05	3.57E-05	3.57E-05	3.57E-05	3.57E-05	3.57E-05	3.57E-05	3.57E-05	3.57E-05

*"MUSCLE" VALUES MAY BE USED FOR "SEPARABLE FAT" WITH ADJUSTMENT (SEE TEXT)
PRINCIPLE REFERENCE-ENDT, P. M. AND VAN DER LEUN, C., NUCL. PHYS. A105, 261 (1967)
DATE DECAY DATA REVIEWED-AUGUST 1973

S, AVERAGE DOSE EQUIVALENT PER UNIT ACCUMULATED ACTIVITY (REM/UCI-DAY), FOR 19-POTASSIUM-40 (TR=1.270E 09 YEARS)

DATE OF TABLE 11-27-74

TARGET ORGANS		SOURCE ORGANS										
		ADRENALS	BLAD CON	S CONT	SI+CONT	ULI CONT	LLI CONT	KIDNEYS	LIVER	LUNG	RESP LYM NODE	MUSCLE*
ADRENALS	G	1.06E-02	6.49E-06	8.60E-05	2.86E-05	2.72E-05	1.21E-05	2.81E-04	1.06E-04	4.69E-05	4.69E-05	3.65E-05
	B	1.82E 00	0.0	0.0	0.0	0.0	0.0	0.0	0.0	0.0	0.0	0.0
	T	1.83E 00	6.49E-06	8.60E-05	2.86E-05	2.72E-05	1.21E-05	2.81E-04	1.06E-04	4.69E-05	4.69E-05	3.65E-05
BLAD WALL	G	6.53E-06	1.61E-03	1.15E-05	8.04E-05	3.86E-05	1.54E-04	1.14E-05	6.38E-06	2.55E-06	2.55E-06	4.20E-05
	B	0.0	6.36E-02	0.0	0.0	0.0	0.0	0.0	0.0	0.0	0.0	0.0
	T	6.53E-06	6.52E-02	1.15E-05	8.04E-05	3.86E-05	1.54E-04	1.14E-05	6.38E-06	2.55E-06	2.55E-06	4.20E-05
GI TRACT S WALL	G	6.39E-05	1.04E-05	1.15E-03	8.39E-05	7.45E-05	3.66E-05	6.65E-05	4.66E-05	4.76E-05	4.76E-05	3.39E-05
	B	0.0	0.0	5.09E-02	0.0	0.0	0.0	0.0	0.0	0.0	0.0	0.0
	T	6.39E-05	1.04E-05	5.20E-02	8.39E-05	7.45E-05	3.66E-05	6.65E-05	4.66E-05	4.76E-05	4.76E-05	3.39E-05
SI+CONT	G	2.64E-05	6.34E-05	5.73E-05	7.04E-04	3.53E-04	2.05E-04	6.88E-05	3.94E-05	8.05E-06	8.05E-06	3.67E-05
	B	0.0	0.0	0.0	3.18E-02	0.0	0.0	0.0	0.0	0.0	0.0	0.0
	T	2.64E-05	6.34E-05	5.73E-05	3.25E-02	3.53E-04	2.05E-04	6.88E-05	3.94E-05	8.05E-06	8.05E-06	3.67E-05
ULI WALL	G	2.28E-05	4.75E-05	8.88E-05	5.20E-04	9.69E-04	1.04E-04	7.12E-05	5.11E-05	1.12E-05	1.12E-05	3.88E-05
	B	0.0	0.0	0.0	0.0	5.78E-02	0.0	0.0	0.0	0.0	0.0	0.0
	T	2.28E-05	4.75E-05	8.88E-05	5.20E-04	5.88E-02	1.04E-04	7.12E-05	5.11E-05	1.12E-05	1.12E-05	3.88E-05
LLI WALL	G	9.72E-06	1.67E-04	3.48E-05	1.58E-04	6.80E-05	1.18E-03	2.58E-05	9.39E-06	1.71E-06	1.71E-06	4.02E-05
	B	0.0	0.0	0.0	0.0	0.0	9.43E-02	0.0	0.0	0.0	0.0	0.0
	T	9.72E-06	1.67E-04	3.48E-05	1.58E-04	6.80E-05	9.54E-02	2.58E-05	9.39E-06	1.71E-06	1.71E-06	4.02E-05
KIDNEYS	G	2.40E-04	1.27E-05	7.64E-05	6.79E-05	6.68E-05	2.31E-05	1.67E-03	8.84E-05	2.77E-05	2.77E-05	3.46E-05
	B	0.0	0.0	0.0	0.0	0.0	0.0	8.21E-02	0.0	0.0	0.0	0.0
	T	2.40E-04	1.27E-05	7.64E-05	6.79E-05	6.68E-05	2.31E-05	8.38E-02	8.84E-05	2.77E-05	2.77E-05	3.46E-05
LIVER	G	1.12E-04	7.45E-06	4.76E-05	4.40E-05	5.95E-05	1.15E-05	8.94E-05	5.82E-04	5.59E-05	5.59E-05	2.68E-05
	B	0.0	0.0	0.0	0.0	0.0	0.0	0.0	1.41E-02	0.0	0.0	0.0
	T	1.12E-04	7.45E-06	4.76E-05	4.40E-05	5.95E-05	1.15E-05	8.94E-05	1.47E-02	5.59E-05	5.59E-05	2.68E-05
LUNGS	G	5.74E-05	2.36E-06	4.27E-05	8.29E-06	1.10E-05	4.24E-06	2.31E-05	5.97E-05	3.37E-04	3.37E-04	3.14E-05
	B	0.0	0.0	0.0	0.0	0.0	0.0	0.0	0.0	2.54E-02	2.54E-02	0.0
	T	5.74E-05	2.36E-06	4.27E-05	8.29E-06	1.10E-05	4.24E-06	2.31E-05	5.97E-05	2.58E-02	2.58E-02	3.14E-05
RESP LYM NODE	G	5.74E-05	2.36E-06	4.27E-05	8.29E-06	1.10E-05	4.24E-06	2.31E-05	5.97E-05	3.35E-04	3.37E-04	3.14E-05
	B	0.0	0.0	0.0	0.0	0.0	0.0	0.0	0.0	2.54E-02	1.70E 00	0.0
	T	5.74E-05	2.36E-06	4.27E-05	8.29E-06	1.10E-05	4.24E-06	2.31E-05	5.97E-05	2.58E-02	1.70E 00	3.14E-05
MUSCLE*	G	3.65E-05	4.20E-05	3.39E-05	3.67E-05	3.53E-05	4.02E-05	3.46E-05	2.68E-05	3.14E-05	3.14E-05	3.62E-05
	B	0.0	0.0	0.0	0.0	0.0	0.0	0.0	0.0	0.0	0.0	9.09E-04
	T	3.65E-05	4.20E-05	3.39E-05	3.67E-05	3.53E-05	4.02E-05	3.46E-05	2.68E-05	3.14E-05	3.14E-05	9.45E-04
OVARIES	G	2.95E-06	1.73E-04	2.46E-05	1.85E-04	1.47E-04	3.90E-04	3.05E-05	2.60E-05	4.53E-06	4.53E-06	4.66E-05
	B	0.0	0.0	0.0	0.0	0.0	0.0	0.0	0.0	0.0	0.0	0.0
	T	2.95E-06	1.73E-04	2.46E-05	1.85E-04	1.47E-04	3.90E-04	3.05E-05	2.60E-05	4.53E-06	4.53E-06	4.66E-05

19-POTASSIUM-40 CONTINUED

SOURCE ORGANS

TARGET ORGANS		ADRENALS	BLAD CON	S CONT	SI+CONT	ULI CONT	LLI CONT	KIDNEYS	LIVER	LUNG	RESP LYM NODE	MUSCLE*
PANCREAS	G	2.02E-04	6.29E-06	3.92E-04	4.01E-05	4.90E-05	1.57E-05	1.53E-04	9.42E-05	5.79E-05	5.79E-05	4.21E-05
	B	0.0	0.0	0.0	0.0	0.0	0.0	0.0	0.0	0.0	0.0	0.0
	T	2.02E-04	6.29E-06	3.92E-04	4.01E-05	4.90E-05	1.57E-05	1.53E-04	9.42E-05	5.79E-05	5.79E-05	4.21E-05
SKELETON BONE	G	3.12E-05	1.33E-05	1.39E-05	1.82E-05	1.65E-05	2.35E-05	2.31E-05	1.74E-05	2.24E-05	2.24E-05	2.74E-05
	B	0.0	0.0	0.0	0.0	0.0	0.0	0.0	0.0	0.0	0.0	0.0
	T	3.12E-05	1.33E-05	1.39E-05	1.82E-05	1.65E-05	2.35E-05	2.31E-05	1.74E-05	2.24E-05	2.24E-05	2.74E-05
R MARROW	G	5.47E-05	2.70E-05	2.26E-05	5.50E-05	4.69E-05	6.82E-05	5.75E-05	2.51E-05	2.87E-05	2.87E-05	3.00E-05
	B	0.0	0.0	0.0	0.0	0.0	0.0	0.0	0.0	0.0	0.0	0.0
	T	5.47E-05	2.70E-05	2.26E-05	5.50E-05	4.69E-05	6.82E-05	5.75E-05	2.51E-05	2.87E-05	2.87E-05	3.00E-05
Y MARROW	G	3.04E-05	1.22E-05	1.98E-05	2.47E-05	2.33E-05	2.93E-05	2.84E-05	2.61E-05	2.27E-05	2.27E-05	2.46E-05
	B	0.0	0.0	0.0	0.0	0.0	0.0	0.0	0.0	0.0	0.0	0.0
	T	3.04E-05	1.22E-05	1.98E-05	2.47E-05	2.33E-05	2.93E-05	2.84E-05	2.61E-05	2.27E-05	2.27E-05	2.46E-05
T E CL	G	3.12E-05	1.33E-05	1.39E-05	1.82E-05	1.65E-05	2.35E-05	2.31E-05	1.74E-05	2.24E-05	2.24E-05	2.74E-05
	B	0.0	0.0	0.0	0.0	0.0	0.0	0.0	0.0	0.0	0.0	0.0
	T	3.12E-05	1.33E-05	1.39E-05	1.82E-05	1.65E-05	2.35E-05	2.31E-05	1.74E-05	2.24E-05	2.24E-05	2.74E-05
SKIN	G	1.88E-05	1.72E-05	1.52E-05	1.52E-05	1.43E-05	1.71E-05	1.65E-05	1.57E-05	1.74E-05	1.74E-05	2.30E-05
	B	0.0	0.0	0.0	0.0	0.0	0.0	0.0	0.0	0.0	0.0	0.0
	T	1.88E-05	1.72E-05	1.52E-05	1.52E-05	1.43E-05	1.71E-05	1.65E-05	1.57E-05	1.74E-05	1.74E-05	2.30E-05
SPLEEN	G	1.32E-04	5.03E-06	2.18E-04	4.06E-05	3.64E-05	2.39E-05	1.88E-04	2.33E-05	4.21E-05	4.21E-05	3.53E-05
	B	0.0	0.0	0.0	0.0	0.0	0.0	0.0	0.0	0.0	0.0	0.0
	T	1.32E-04	5.03E-06	2.18E-04	4.06E-05	3.64E-05	2.39E-05	1.88E-04	2.33E-05	4.21E-05	4.21E-05	3.53E-05
TESTES	G	2.52E-06	1.01E-04	4.55E-06	1.48E-05	1.04E-05	3.72E-05	4.57E-06	3.87E-06	1.09E-06	1.09E-06	3.07E-05
	B	0.0	0.0	0.0	0.0	0.0	0.0	0.0	0.0	0.0	0.0	0.0
	T	2.52E-06	1.01E-04	4.55E-06	1.48E-05	1.04E-05	3.72E-05	4.57E-06	3.87E-06	1.09E-06	1.09E-06	3.07E-05
THYMUS	G	1.56E-05	1.36E-06	1.78E-05	4.27E-06	4.58E-06	2.10E-06	8.18E-06	1.70E-05	1.04E-04	1.04E-04	5.36E-05
	B	0.0	0.0	0.0	0.0	0.0	0.0	0.0	0.0	0.0	0.0	0.0
	T	1.56E-05	1.36E-06	1.78E-05	4.27E-06	4.58E-06	2.10E-06	8.18E-06	1.70E-05	1.04E-04	1.04E-04	5.36E-05
THYROID	G	6.43E-06	5.56E-07	4.59E-06	1.61E-06	1.69E-06	8.64E-07	3.16E-06	5.30E-06	2.24E-05	2.24E-05	3.25E-05
	B	0.0	0.0	0.0	0.0	0.0	0.0	0.0	0.0	0.0	0.0	0.0
	T	6.43E-06	5.56E-07	4.59E-06	1.61E-06	1.69E-06	8.64E-07	3.16E-06	5.30E-06	2.24E-05	2.24E-05	3.25E-05
UTERUS	G	1.15E-05	3.11E-04	2.53E-05	1.88E-04	1.20E-04	1.38E-04	2.77E-05	1.55E-05	6.85E-06	6.85E-06	4.30E-05
	B	0.0	0.0	0.0	0.0	0.0	0.0	0.0	0.0	0.0	0.0	0.0
	T	1.15E-05	3.11E-04	2.53E-05	1.88E-04	1.20E-04	1.38E-04	2.77E-05	1.55E-05	6.85E-06	6.85E-06	4.30E-05
T BODY	G	3.98E-05	4.37E-05	4.18E-05	4.59E-05	4.48E-05	4.47E-05	4.04E-05	4.00E-05	3.39E-05	3.39E-05	3.46E-05
	B	3.64E-04	4.09E-05	1.09E-04	2.91E-04	1.74E-04	2.15E-04	3.64E-04	3.64E-04	3.64E-04	3.64E-04	3.64E-04
	T	4.03E-04	8.46E-05	1.51E-04	3.37E-04	2.18E-04	2.60E-04	4.04E-04	4.04E-04	3.97E-04	3.97E-04	3.98E-04

CONTINUED NEXT PAGE

19-POTASSIUM-40 CONTINUED

TARGET ORGANS		SOURCE ORGANS										
		OVARIES	PANCREAS	COR BONE	CAN BONE	R MARROW	Y MARROW	SKIN	SPLEEN	TESTES	THYROID	T BODY
ADRENALS	G	1.34E-05	1.86E-04	4.96E-05	4.96E-05	5.26E-05	3.11E-05	2.18E-05	1.53E-04	2.52E-06	5.71E-06	7.42E-05
	B	0.0	0.0	0.0	0.0	0.0	0.0	0.0	0.0	0.0	0.0	3.64E-04
	T	1.34E-05	1.86E-04	4.96E-05	4.96E-05	5.26E-05	3.11E-05	2.18E-05	1.53E-04	2.52E-06	5.71E-06	4.38E-04
BLAD WALL	G	1.59E-04	7.53E-06	1.90E-05	1.90E-05	2.89E-05	1.08E-05	2.07E-05	7.10E-06	1.09E-04	5.58E-07	4.41E-05
	B	0.0	0.0	0.0	0.0	0.0	0.0	0.0	0.0	0.0	0.0	3.64E-04
	T	1.59E-04	7.53E-06	1.90E-05	1.90E-05	2.89E-05	1.08E-05	2.07E-05	7.10E-06	1.09E-04	5.58E-07	4.08E-04
GI TRACT S WALL	G	2.46E-05	3.85E-04	1.46E-05	1.46E-05	2.73E-05	1.74E-05	1.59E-05	2.41E-04	3.06E-06	4.84E-06	3.25E-05
	B	0.0	0.0	0.0	0.0	0.0	0.0	0.0	0.0	0.0	0.0	3.64E-04
	T	2.46E-05	3.85E-04	1.46E-05	1.46E-05	2.73E-05	1.74E-05	1.59E-05	2.41E-04	3.06E-06	4.84E-06	3.96E-04
SI+CONT	G	2.59E-04	4.35E-05	1.85E-05	1.85E-05	5.80E-05	2.49E-05	1.50E-05	3.60E-05	1.37E-05	1.44E-06	4.54E-05
	B	0.0	0.0	0.0	0.0	0.0	0.0	0.0	0.0	0.0	0.0	3.64E-04
	T	2.59E-04	4.35E-05	1.85E-05	1.85E-05	5.80E-05	2.49E-05	1.50E-05	3.60E-05	1.37E-05	1.44E-06	4.09E-04
ULI WALL	G	2.48E-04	5.24E-05	1.82E-05	1.82E-05	4.50E-05	2.49E-05	1.40E-05	3.57E-05	9.08E-06	1.72E-06	4.17E-05
	B	0.0	0.0	0.0	0.0	0.0	0.0	0.0	0.0	0.0	0.0	3.64E-04
	T	2.48E-04	5.24E-05	1.82E-05	1.82E-05	4.50E-05	2.49E-05	1.40E-05	3.57E-05	9.08E-06	1.72E-06	4.05E-04
LLI WALL	G	3.12E-04	1.77E-05	2.37E-05	2.37E-05	6.66E-05	2.43E-05	1.50E-05	1.63E-05	6.12E-05	7.54E-07	4.58E-05
	B	0.0	0.0	0.0	0.0	0.0	0.0	0.0	0.0	0.0	0.0	3.64E-04
	T	3.12E-04	1.77E-05	2.37E-05	2.37E-05	6.66E-05	2.43E-05	1.50E-05	1.63E-05	6.12E-05	7.54E-07	4.09E-04
KIDNEYS	G	2.58E-05	1.41E-04	2.49E-05	2.49E-05	6.21E-05	2.79E-05	1.85E-05	1.97E-04	4.31E-06	4.49E-06	3.83E-05
	B	0.0	0.0	0.0	0.0	0.0	0.0	0.0	0.0	0.0	0.0	3.64E-04
	T	2.58E-05	1.41E-04	2.49E-05	2.49E-05	6.21E-05	2.79E-05	1.85E-05	1.97E-04	4.31E-06	4.49E-06	4.02E-04
LIVER	G	1.66E-05	9.42E-05	1.78E-05	1.78E-05	2.58E-05	2.72E-05	1.70E-05	2.67E-05	3.17E-06	5.57E-06	3.93E-05
	B	0.0	0.0	0.0	0.0	0.0	0.0	0.0	0.0	0.0	0.0	3.64E-04
	T	1.66E-05	9.42E-05	1.78E-05	1.78E-05	2.58E-05	2.72E-05	1.70E-05	2.67E-05	3.17E-06	5.57E-06	4.03E-04
LUNGS	G	4.32E-06	5.26E-05	2.35E-05	2.35E-05	3.09E-05	2.57E-05	1.80E-05	4.83E-05	1.20E-06	2.62E-05	3.16E-05
	B	0.0	0.0	0.0	0.0	0.0	0.0	0.0	0.0	0.0	0.0	3.64E-04
	T	4.32E-06	5.26E-05	2.35E-05	2.35E-05	3.09E-05	2.57E-05	1.80E-05	4.83E-05	1.20E-06	2.62E-05	3.95E-04
RESP LYM NODE	G	4.32E-06	5.26E-05	2.35E-05	2.35E-05	3.09E-05	2.57E-05	1.80E-05	4.83E-05	1.20E-06	2.62E-05	3.16E-05
	B	0.0	0.0	0.0	0.0	0.0	0.0	0.0	0.0	0.0	0.0	3.64E-04
	T	4.32E-06	5.26E-05	2.35E-05	2.35E-05	3.09E-05	2.57E-05	1.80E-05	4.83E-05	1.20E-06	2.62E-05	3.95E-04
MUSCLE*	G	4.66E-05	4.21E-05	2.74E-05	2.74E-05	3.16E-05	2.49E-05	2.30E-05	3.53E-05	3.07E-05	3.25E-05	3.46E-05
	B	0.0	0.0	0.0	0.0	0.0	0.0	0.0	0.0	0.0	0.0	3.64E-04
	T	4.66E-05	4.21E-05	2.74E-05	2.74E-05	3.16E-05	2.49E-05	2.30E-05	3.53E-05	3.07E-05	3.25E-05	3.98E-04
OVARIES	G	1.79E-02	1.89E-05	2.17E-05	2.17E-05	8.61E-05	2.30E-05	1.37E-05	1.65E-05	1.84E-47	8.92E-07	4.93E-05
	B	2.31E 00	0.0	0.0	0.0	0.0	0.0	0.0	0.0	0.0	0.0	3.64E-04
	T	2.33E 00	1.89E-05	2.17E-05	2.17E-05	8.61E-05	2.30E-05	1.37E-05	1.65E-05	1.84E-47	8.92E-07	4.13E-04

19-POTASSIUM-40 CONTINUED

TARGET ORGANS		SOURCE ORGANS										
		OVARIES	PANCREAS	COR BONE	CAN BONE	R MARROW	Y MARROW	SKIN	SPLEEN	TESTES	THYROID	T BODY
PANCREAS	G	1.45E-05	4.94E-03	2.84E-05	2.84E-05	3.02E-05	2.61E-05	1.36E-05	4.00E-04	3.42E-06	1.07E-05	3.81E-05
	B	0.0	2.54E-01	0.0	0.0	0.0	0.0	0.0	0.0	0.0	0.0	3.64E-04
	T	1.45E-05	2.59E-01	2.84E-05	2.84E-05	3.02E-05	2.61E-05	1.36E-05	4.00E-04	3.42E-06	1.07E-05	4.02E-04
SKELETON BONE	G	2.09E-05	2.16E-05	7.89E-05	7.89E-05	5.28E-05	5.94E-05	2.12E-05	1.83E-05	1.55E-05	1.81E-05	3.37E-05
	B	0.0	0.0	5.09E-03	2.98E-03	1.41E-03	0.0	0.0	0.0	0.0	0.0	3.64E-04
	T	2.09E-05	2.16E-05	5.17E-03	3.06E-03	1.46E-03	5.94E-05	2.12E-05	1.83E-05	1.55E-05	1.81E-05	3.97E-04
R MARROW	G	6.63E-05	3.98E-05	7.15E-05	7.15E-05	1.68E-04	6.03E-05	2.01E-05	2.60E-05	1.18E-05	1.98E-05	3.67E-05
	B	0.0	0.0	2.64E-04	7.04E-03	1.23E-02	0.0	0.0	0.0	0.0	0.0	3.64E-04
	T	6.63E-05	3.98E-05	3.35E-04	7.11E-03	1.24E-02	6.03E-05	2.01E-05	2.60E-05	1.18E-05	1.98E-05	4.00E-04
Y MARROW	G	2.72E-05	2.55E-05	6.76E-05	6.76E-05	6.50E-05	1.02E-04	2.26E-05	2.70E-05	7.10E-06	1.02E-05	3.10E-05
	B	0.0	0.0	0.0	0.0	0.0	1.70E-02	0.0	0.0	0.0	0.0	3.64E-04
	T	2.72E-05	2.55E-05	6.76E-05	6.76E-05	6.50E-05	1.71E-02	2.26E-05	2.70E-05	7.10E-06	1.02E-05	3.95E-04
T E CL	G	2.09E-05	2.16E-05	7.87E-05	7.87E-05	7.12E-05	6.58E-05	2.12E-05	1.83E-05	1.55E-05	1.81E-05	3.37E-05
	B	0.0	0.0	3.26E-03	5.21E-03	5.01E-03	4.24E-03	0.0	0.0	0.0	0.0	3.64E-04
	T	2.09E-05	2.16E-05	3.34E-03	5.29E-03	5.08E-03	4.31E-03	2.12E-05	1.83E-05	1.55E-05	1.81E-05	3.97E-04
SKIN	G	1.36E-05	1.37E-05	2.20E-05	2.20E-05	1.94E-05	2.28E-05	5.01E-05	1.59E-05	3.95E-05	2.29E-05	2.42E-05
	B	0.0	0.0	0.0	0.0	0.0	0.0	9.79E-03	0.0	0.0	0.0	3.64E-04
	T	1.36E-05	1.37E-05	2.20E-05	2.20E-05	1.94E-05	2.28E-05	9.84E-03	1.59E-05	3.95E-05	2.29E-05	3.88E-04
SPLEEN	G	1.27E-05	4.15E-04	1.62E-05	1.62E-05	2.30E-05	3.06E-05	1.49E-05	2.94E-03	1.82E-06	4.92E-06	3.67E-05
	B	0.0	0.0	0.0	0.0	0.0	0.0	0.0	1.41E-01	0.0	0.0	3.64E-04
	T	1.27E-05	4.15E-04	1.62E-05	1.62E-05	2.30E-05	3.06E-05	1.49E-05	1.44E-01	1.82E-06	4.92E-06	4.00E-04
TESTES	G	1.84E-47	3.46E-06	1.82E-05	1.82E-05	4.58E-06	2.13E-05	2.36E-05	3.18E-06	8.11E-03	2.65E-07	3.83E-05
	B	0.0	0.0	0.0	0.0	0.0	0.0	0.0	0.0	7.27E-01	0.0	3.64E-04
	T	1.84E-47	3.46E-06	1.82E-05	1.82E-05	4.58E-06	2.13E-05	2.36E-05	3.18E-06	7.35E-01	2.65E-07	4.02E-04
THYMUS	G	2.24E-06	1.64E-05	1.18E-05	1.18E-05	2.45E-05	1.93E-05	1.53E-05	4.40E-06	6.21E-07	1.01E-04	4.57E-05
	B	0.0	0.0	0.0	0.0	0.0	0.0	0.0	0.0	0.0	0.0	3.64E-04
	T	2.24E-06	1.64E-05	1.18E-05	1.18E-05	2.45E-05	1.93E-05	1.53E-05	4.40E-06	6.21E-07	1.01E-04	4.09E-04
THYROID	G	8.91E-07	5.12E-06	2.81E-05	2.81E-05	1.68E-05	1.74E-05	1.79E-05	4.49E-06	2.65E-07	1.14E-02	3.19E-05
	B	0.0	0.0	0.0	0.0	0.0	0.0	0.0	0.0	0.0	1.27E 00	3.64E-04
	T	8.91E-07	5.12E-06	2.81E-05	2.81E-05	1.68E-05	1.74E-05	1.79E-05	4.49E-06	2.65E-07	1.28E 00	3.95E-04
UTERUS	G	3.78E-04	1.45E-05	1.60E-05	1.60E-05	4.22E-05	1.04E-05	1.65E-05	5.72E-06	1.84E-47	8.56E-07	4.03E-05
	B	0.0	0.0	0.0	0.0	0.0	0.0	0.0	0.0	0.0	0.0	3.64E-04
	T	3.78E-04	1.45E-05	1.60E-05	1.60E-05	4.22E-05	1.04E-05	1.65E-05	5.72E-06	1.84E-47	8.56E-07	4.04E-04
T BODY	G	4.64E-05	4.58E-05	3.44E-05	3.44E-05	3.79E-05	3.07E-05	2.31E-05	4.00E-05	3.47E-05	3.12E-05	3.42E-05
	B	3.64E-04	3.64E-04	3.64E-04	3.64E-04	3.64E-04	3.64E-04	3.64E-04	3.64E-04	3.64E-04	3.64E-04	3.64E-04
	T	4.10E-04	4.09E-04	3.98E-04	3.98E-04	4.01E-04	3.94E-04	3.87E-04	4.04E-04	3.98E-04	3.95E-04	3.98E-04

*"MUSCLE" VALUES MAY BE USED FOR "SEPARABLE FAT" WITH ADJUSTMENT (SEE TEXT)
PRINCIPLE REFERENCE-MCCANN, M. F. ET AL., NUCL. PHYS. A98, 577 (1967)
DATE DECAY DATA REVIEWED-SEPTEMBER 1971

S, AVERAGE DOSE EQUIVALENT PER UNIT ACCUMULATED ACTIVITY (REM/UCI-DAY), FOR 19-POTASSIUM-42 (TR=1.240E 01 HOURS)

DATE OF TABLE 11-27-74

TARGET ORGANS		SOURCE ORGANS										
		ADRENALS	BLAD CON	S CONT	SI+CONT	ULI CONT	LLI CONT	KIDNEYS	LIVER	LUNG	RESP LYM NODE	MUSCLE*
ADRENALS	G	1.90E-02	1.18E-05	1.59E-04	5.25E-05	4.85E-05	2.20E-05	5.04E-04	1.93E-04	8.17E-05	8.17E-05	6.60E-05
	B	5.23E 00	0.0	0.0	0.0	0.0	0.0	0.0	0.0	0.0	0.0	0.0
	T	5.25E 00	1.18E-05	1.59E-04	5.25E-05	4.85E-05	2.20E-05	5.04E-04	1.93E-04	8.17E-05	8.17E-05	6.60E-05
BLAD WALL	G	1.19E-05	2.91E-03	2.04E-05	1.49E-04	6.97E-05	2.82E-04	2.04E-05	1.20E-05	4.67E-06	4.67E-06	7.61E-05
	B	0.0	1.83E-01	0.0	0.0	0.0	0.0	0.0	0.0	0.0	0.0	0.0
	T	1.19E-05	1.86E-01	2.04E-05	1.49E-04	6.97E-05	2.82E-04	2.04E-05	1.20E-05	4.67E-06	4.67E-06	7.61E-05
GI TRACT S WALL	G	1.14E-04	1.87E-05	2.08E-03	1.52E-04	1.34E-04	6.71E-05	1.20E-04	8.45E-05	8.67E-05	8.67E-05	6.14E-05
	B	0.0	0.0	1.46E-01	0.0	0.0	0.0	0.0	0.0	0.0	0.0	0.0
	T	1.14E-04	1.87E-05	1.49E-01	1.52E-04	1.34E-04	6.71E-05	1.20E-04	8.45E-05	8.67E-05	8.67E-05	6.14E-05
SI+CONT	G	4.83E-05	1.15E-04	1.04E-04	1.27E-03	6.36E-04	3.71E-04	1.25E-04	7.15E-05	1.47E-05	1.47E-05	6.64E-05
	B	0.0	0.0	0.0	9.15E-02	0.0	0.0	0.0	0.0	0.0	0.0	0.0
	T	4.83E-05	1.15E-04	1.04E-04	9.28E-02	6.36E-04	3.71E-04	1.25E-04	7.15E-05	1.47E-05	1.47E-05	6.64E-05
ULI WALL	G	4.10E-05	8.64E-05	1.62E-04	9.38E-04	1.75E-03	1.89E-04	1.28E-04	9.21E-05	2.03E-05	2.03E-05	7.02E-05
	B	0.0	0.0	0.0	0.0	1.66E-01	0.0	0.0	0.0	0.0	0.0	0.0
	T	4.10E-05	8.64E-05	1.62E-04	9.38E-04	1.68E-01	1.89E-04	1.28E-04	9.21E-05	2.03E-05	2.03E-05	7.02E-05
LLI WALL	G	1.83E-05	3.04E-04	6.30E-05	2.85E-04	1.21E-04	2.13E-03	4.73E-05	1.73E-05	3.02E-06	3.02E-06	7.27E-05
	B	0.0	0.0	0.0	0.0	0.0	2.71E-01	0.0	0.0	0.0	0.0	0.0
	T	1.83E-05	3.04E-04	6.30E-05	2.85E-04	1.21E-04	2.73E-01	4.73E-05	1.73E-05	3.02E-06	3.02E-06	7.27E-05
KIDNEYS	G	4.32E-04	2.35E-05	1.38E-04	1.22E-04	1.20E-04	4.23E-05	3.00E-03	1.60E-04	4.99E-05	4.99E-05	6.27E-05
	B	0.0	0.0	0.0	0.0	0.0	0.0	2.36E-01	0.0	0.0	0.0	0.0
	T	4.32E-04	2.35E-05	1.38E-04	1.22E-04	1.20E-04	4.23E-05	2.39E-01	1.60E-04	4.99E-05	4.99E-05	6.27E-05
LIVER	G	2.03E-04	1.37E-05	8.66E-05	7.96E-05	1.08E-04	2.09E-05	1.62E-04	1.05E-03	1.01E-04	1.01E-04	4.85E-05
	B	0.0	0.0	0.0	0.0	0.0	0.0	0.0	4.07E-02	0.0	0.0	0.0
	T	2.03E-04	1.37E-05	8.66E-05	7.96E-05	1.08E-04	2.09E-05	1.62E-04	4.17E-02	1.01E-04	1.01E-04	4.85E-05
LUNGS	G	1.04E-04	4.33E-06	7.72E-05	1.51E-05	2.00E-05	7.88E-06	4.16E-05	1.08E-04	6.05E-04	6.05E-04	5.67E-05
	B	0.0	0.0	0.0	0.0	0.0	0.0	0.0	0.0	7.32E-02	7.32E-02	0.0
	T	1.04E-04	4.33E-06	7.72E-05	1.51E-05	2.00E-05	7.88E-06	4.16E-05	1.08E-04	7.38E-02	7.38E-02	5.67E-05
RESP LYM NODE	G	1.04E-04	4.33E-06	7.72E-05	1.51E-05	2.00E-05	7.88E-06	4.16E-05	1.08E-04	6.05E-04	6.05E-04	5.67E-05
	B	0.0	0.0	0.0	0.0	0.0	0.0	0.0	0.0	7.32E-02	4.88E 00	0.0
	T	1.04E-04	4.33E-06	7.72E-05	1.51E-05	2.00E-05	7.88E-06	4.16E-05	1.08E-04	7.38E-02	4.88E 00	5.67E-05
MUSCLE*	G	6.60E-05	7.61E-05	6.14E-05	6.64E-05	6.39E-05	7.27E-05	6.27E-05	4.85E-05	5.67E-05	5.67E-05	6.53E-05
	B	0.0	0.0	0.0	0.0	0.0	0.0	0.0	0.0	0.0	0.0	2.62E-03
	T	6.60E-05	7.61E-05	6.14E-05	6.64E-05	6.39E-05	7.27E-05	6.27E-05	4.85E-05	5.67E-05	5.67E-05	2.68E-03
OVARIES	G	4.70E-06	3.21E-04	4.24E-05	3.24E-04	2.74E-04	7.04E-04	5.37E-05	4.75E-05	8.26E-06	8.26E-06	8.42E-05
	B	0.0	0.0	0.0	0.0	0.0	0.0	0.0	0.0	0.0	0.0	0.0
	T	4.70E-06	3.21E-04	4.24E-05	3.24E-04	2.74E-04	7.04E-04	5.37E-05	4.75E-05	8.26E-06	8.26E-06	8.42E-05

19-POTASSIUM-42 CONTINUED

TARGET ORGANS		SOURCE ORGANS										
		ADRENALS	BLAD CON	S CONT	SI+CONT	ULI CONT	LLI CONT	KIDNEYS	LIVER	LUNG	RESP LYM NODE	MUSCLE*
PANCREAS	G	3.64E-04	1.17E-05	7.08E-04	7.20E-05	8.93E-05	2.84E-05	2.72E-04	1.69E-04	1.05E-04	1.05E-04	7.62E-05
	B	0.0	0.0	0.0	0.0	0.0	0.0	0.0	0.0	0.0	0.0	0.0
	T	3.64E-04	1.17E-05	7.08E-04	7.20E-05	8.93E-05	2.84E-05	2.72E-04	1.69E-04	1.05E-04	1.05E-04	7.62E-05
SKELETON BONE	G	5.64E-05	2.42E-05	2.51E-05	3.29E-05	2.99E-05	4.25E-05	4.19E-05	3.17E-05	4.05E-05	4.05E-05	4.96E-05
	B	0.0	0.0	0.0	0.0	0.0	0.0	0.0	0.0	0.0	0.0	0.0
	T	5.64E-05	2.42E-05	2.51E-05	3.29E-05	2.99E-05	4.25E-05	4.19E-05	3.17E-05	4.05E-05	4.05E-05	4.96E-05
R MARROW	G	9.88E-05	4.89E-05	4.07E-05	9.93E-05	8.51E-05	1.23E-04	1.04E-04	4.58E-05	5.20E-05	5.20E-05	5.43E-05
	B	0.0	0.0	0.0	0.0	0.0	0.0	0.0	0.0	0.0	0.0	0.0
	T	9.88E-05	4.89E-05	4.07E-05	9.93E-05	8.51E-05	1.23E-04	1.04E-04	4.58E-05	5.20E-05	5.20E-05	5.43E-05
Y MARROW	G	5.50E-05	2.22E-05	3.59E-05	4.46E-05	4.22E-05	5.31E-05	5.13E-05	4.74E-05	4.10E-05	4.10E-05	4.44E-05
	B	0.0	0.0	0.0	0.0	0.0	0.0	0.0	0.0	0.0	0.0	0.0
	T	5.50E-05	2.22E-05	3.59E-05	4.46E-05	4.22E-05	5.31E-05	5.13E-05	4.74E-05	4.10E-05	4.10E-05	4.44E-05
T E CL	G	5.64E-05	2.42E-05	2.51E-05	3.29E-05	2.99E-05	4.25E-05	4.19E-05	3.17E-05	4.05E-05	4.05E-05	4.96E-05
	B	0.0	0.0	0.0	0.0	0.0	0.0	0.0	0.0	0.0	0.0	0.0
	T	5.64E-05	2.42E-05	2.51E-05	3.29E-05	2.99E-05	4.25E-05	4.19E-05	3.17E-05	4.05E-05	4.05E-05	4.96E-05
SKIN	G	3.40E-05	3.12E-05	2.77E-05	2.75E-05	2.61E-05	3.12E-05	2.99E-05	2.85E-05	3.15E-05	3.15E-05	4.16E-05
	B	0.0	0.0	0.0	0.0	0.0	0.0	0.0	0.0	0.0	0.0	0.0
	T	3.40E-05	3.12E-05	2.77E-05	2.75E-05	2.61E-05	3.12E-05	2.99E-05	2.85E-05	3.15E-05	3.15E-05	4.16E-05
SPLEEN	G	2.38E-04	9.25E-06	3.92E-04	7.41E-05	6.58E-05	4.30E-05	3.38E-04	4.17E-05	7.54E-05	7.54E-05	6.38E-05
	B	0.0	0.0	0.0	0.0	0.0	0.0	0.0	0.0	0.0	0.0	0.0
	T	2.38E-04	9.25E-06	3.92E-04	7.41E-05	6.58E-05	4.30E-05	3.38E-04	4.17E-05	7.54E-05	7.54E-05	6.38E-05
TESTES	G	4.62E-06	1.82E-04	8.31E-06	2.72E-05	1.86E-05	6.87E-05	8.34E-06	6.61E-06	2.02E-06	2.02E-06	5.63E-05
	B	0.0	0.0	0.0	0.0	0.0	0.0	0.0	0.0	0.0	0.0	0.0
	T	4.62E-06	1.82E-04	8.31E-06	2.72E-05	1.86E-05	6.87E-05	8.34E-06	6.61E-06	2.02E-06	2.02E-06	5.63E-05
THYMUS	G	2.85E-05	2.51E-06	3.14E-05	7.79E-06	8.36E-06	3.86E-06	1.54E-05	3.09E-05	1.89E-04	1.89E-04	9.98E-05
	B	0.0	0.0	0.0	0.0	0.0	0.0	0.0	0.0	0.0	0.0	0.0
	T	2.85E-05	2.51E-06	3.14E-05	7.79E-06	8.36E-06	3.86E-06	1.54E-05	3.09E-05	1.89E-04	1.89E-04	9.98E-05
THYROID	G	1.18E-05	1.04E-06	8.38E-06	2.96E-06	3.11E-06	1.60E-06	5.78E-06	9.67E-06	3.89E-05	3.89E-05	5.88E-05
	B	0.0	0.0	0.0	0.0	0.0	0.0	0.0	0.0	0.0	0.0	0.0
	T	1.18E-05	1.04E-06	8.38E-06	2.96E-06	3.11E-06	1.60E-06	5.78E-06	9.67E-06	3.89E-05	3.89E-05	5.88E-05
UTERUS	G	2.04E-05	5.60E-04	4.57E-05	3.39E-04	2.17E-04	2.49E-04	5.03E-05	2.89E-05	1.28E-05	1.28E-05	7.57E-05
	B	0.0	0.0	0.0	0.0	0.0	0.0	0.0	0.0	0.0	0.0	0.0
	T	2.04E-05	5.60E-04	4.57E-05	3.39E-04	2.17E-04	2.49E-04	5.03E-05	2.89E-05	1.28E-05	1.28E-05	7.57E-05
T BODY	G	7.19E-05	7.90E-05	7.56E-05	8.30E-05	8.09E-05	8.09E-05	7.31E-05	7.23E-05	6.12E-05	6.12E-05	6.24E-05
	B	1.05E-03	1.18E-04	3.14E-04	8.37E-04	4.99E-04	6.20E-04	1.05E-03	1.05E-03	1.05E-03	1.05E-03	1.05E-03
	T	1.12E-03	1.97E-04	3.89E-04	9.20E-04	5.80E-04	7.01E-04	1.12E-03	1.12E-03	1.11E-03	1.11E-03	1.11E-03

CONTINUED NEXT PAGE

19-POTASSIUM-42 CONTINUED

TARGET ORGANS		SOURCE ORGANS										
		OVARIES	PANCREAS	COR BONE	CAN BONE	R MARROW	Y MARROW	SKIN	SPLEEN	TESTES	THYROID	T BODY
ADRENALS	G	2.43E-05	3.39E-04	8.88E-05	8.88E-05	9.03E-05	5.88E-05	3.97E-05	2.73E-04	4.62E-06	1.04E-05	1.36E-04
	B	0.0	0.0	0.0	0.0	0.0	0.0	0.0	0.0	0.0	0.0	1.05E-03
	T	2.43E-05	3.39E-04	8.88E-05	8.88E-05	9.03E-05	5.88E-05	3.97E-05	2.73E-04	4.62E-06	1.04E-05	1.18E-03
BLAD WALL	G	2.85E-04	1.47E-05	3.55E-05	3.55E-05	5.13E-05	1.99E-05	3.75E-05	1.26E-05	1.95E-04	1.04E-06	7.85E-05
	B	0.0	0.0	0.0	0.0	0.0	0.0	0.0	0.0	0.0	0.0	1.05E-03
	T	2.85E-04	1.47E-05	3.55E-05	3.55E-05	5.13E-05	1.99E-05	3.75E-05	1.26E-05	1.95E-04	1.04E-06	1.12E-03
GI TRACT S WALL	G	4.56E-05	6.95E-04	2.66E-05	2.66E-05	4.87E-05	3.14E-05	2.87E-05	4.38E-04	5.76E-06	8.83E-06	5.80E-05
	B	0.0	0.0	0.0	0.0	0.0	0.0	0.0	0.0	0.0	0.0	1.05E-03
	T	4.56E-05	6.95E-04	2.66E-05	2.66E-05	4.87E-05	3.14E-05	2.87E-05	4.38E-04	5.76E-06	8.83E-06	1.10E-03
SI+CONT	G	4.68E-04	7.88E-05	3.33E-05	3.33E-05	1.05E-04	4.52E-05	2.71E-05	6.52E-05	2.51E-05	2.68E-06	8.20E-05
	B	0.0	0.0	0.0	0.0	0.0	0.0	0.0	0.0	0.0	0.0	1.05E-03
	T	4.68E-04	7.88E-05	3.33E-05	3.33E-05	1.05E-04	4.52E-05	2.71E-05	6.52E-05	2.51E-05	2.68E-06	1.13E-03
ULI WALL	G	4.48E-04	9.45E-05	3.28E-05	3.28E-05	8.18E-05	4.55E-05	2.51E-05	6.51E-05	1.71E-05	3.19E-06	7.51E-05
	B	0.0	0.0	0.0	0.0	0.0	0.0	0.0	0.0	0.0	0.0	1.05E-03
	T	4.48E-04	9.45E-05	3.28E-05	3.28E-05	8.18E-05	4.55E-05	2.51E-05	6.51E-05	1.71E-05	3.19E-06	1.12E-03
LLI WALL	G	5.65E-04	3.23E-05	4.24E-05	4.24E-05	1.21E-04	4.47E-05	2.70E-05	2.98E-05	1.12E-04	1.40E-06	8.37E-05
	B	0.0	0.0	0.0	0.0	0.0	0.0	0.0	0.0	0.0	0.0	1.05E-03
	T	5.65E-04	3.23E-05	4.24E-05	4.24E-05	1.21E-04	4.47E-05	2.70E-05	2.98E-05	1.12E-04	1.40E-06	1.13E-03
KIDNEYS	G	4.70E-05	2.54E-04	4.40E-05	4.40E-05	1.13E-04	5.03E-05	3.35E-05	3.57E-04	7.80E-06	8.26E-06	6.86E-05
	B	0.0	0.0	0.0	0.0	0.0	0.0	0.0	0.0	0.0	0.0	1.05E-03
	T	4.70E-05	2.54E-04	4.40E-05	4.40E-05	1.13E-04	5.03E-05	3.35E-05	3.57E-04	7.80E-06	8.26E-06	1.11E-03
LIVER	G	3.03E-05	1.70E-04	3.25E-05	3.25E-05	4.70E-05	4.92E-05	3.10E-05	4.85E-05	5.83E-06	1.03E-05	7.04E-05
	B	0.0	0.0	0.0	0.0	0.0	0.0	0.0	0.0	0.0	0.0	1.05E-03
	T	3.03E-05	1.70E-04	3.25E-05	3.25E-05	4.70E-05	4.92E-05	3.10E-05	4.85E-05	5.83E-06	1.03E-05	1.12E-03
LUNGS	G	7.91E-06	9.51E-05	4.26E-05	4.26E-05	5.60E-05	4.64E-05	3.27E-05	8.75E-05	2.21E-06	4.70E-05	5.69E-05
	B	0.0	0.0	0.0	0.0	0.0	0.0	0.0	0.0	0.0	0.0	1.05E-03
	T	7.91E-06	9.51E-05	4.26E-05	4.26E-05	5.60E-05	4.64E-05	3.27E-05	8.75E-05	2.21E-06	4.70E-05	1.10E-03
RESP LYM NODE	G	7.91E-06	9.51E-05	4.26E-05	4.26E-05	5.60E-05	4.64E-05	3.27E-05	8.75E-05	2.21E-06	4.70E-05	5.69E-05
	B	0.0	0.0	0.0	0.0	0.0	0.0	0.0	0.0	0.0	0.0	1.05E-03
	T	7.91E-06	9.51E-05	4.26E-05	4.26E-05	5.60E-05	4.64E-05	3.27E-05	8.75E-05	2.21E-06	4.70E-05	1.10E-03
MUSCLE*	G	8.42E-05	7.62E-05	4.96E-05	4.96E-05	5.72E-05	4.51E-05	4.16E-05	6.38E-05	5.63E-05	5.88E-05	6.24E-05
	B	0.0	0.0	0.0	0.0	0.0	0.0	0.0	0.0	0.0	0.0	1.05E-03
	T	8.42E-05	7.62E-05	4.96E-05	4.96E-05	5.72E-05	4.51E-05	4.16E-05	6.38E-05	5.63E-05	5.88E-05	1.11E-03
OVARIES	G	3.20E-02	3.32E-05	3.92E-05	3.92E-05	1.59E-04	4.17E-05	2.48E-05	2.92E-05	0.0	1.66E-06	9.21E-05
	B	6.66E 00	0.0	0.0	0.0	0.0	0.0	0.0	0.0	0.0	0.0	1.05E-03
	T	6.69E 00	3.32E-05	3.92E-05	3.92E-05	1.59E-04	4.17E-05	2.48E-05	2.92E-05	0.0	1.66E-06	1.14E-03

19-POTASSIUM-42 CONTINUED

SOURCE ORGANS

TARGET ORGANS		OVARIES	PANCREAS	COR BONE	CAN BONE	R MARROW	Y MARROW	SKIN	SPLEEN	TESTES	THYROID	T BODY
PANCREAS	G	2.43E-05	8.87E-03	5.20E-05	5.20E-05	5.55E-05	4.74E-05	2.51E-05	7.21E-04	6.45E-06	2.04E-05	7.14E-05
	B	0.0	7.32E-01	0.0	0.0	0.0	0.0	0.0	0.0	0.0	0.0	1.05E-03
	T	2.43E-05	7.41E-01	5.20E-05	5.20E-05	5.55E-05	4.74E-05	2.51E-05	7.21E-04	6.45E-06	2.04E-05	1.12E-03
SKELETON BONE	G	3.78E-05	3.91E-05	1.42E-04	1.42E-04	9.54E-05	1.07E-04	3.83E-05	3.32E-05	2.81E-05	3.28E-05	6.09E-05
	B	0.0	0.0	1.46E-02	8.35E-03	4.19E-03	0.0	0.0	0.0	0.0	0.0	1.05E-03
	T	3.78E-05	3.91E-05	1.48E-02	8.50E-03	4.29E-03	1.07E-04	3.83E-05	3.32E-05	2.81E-05	3.28E-05	1.11E-03
R MARROW	G	1.20E-04	7.21E-05	1.29E-04	1.29E-04	3.01E-04	1.09E-04	3.63E-05	4.70E-05	2.13E-05	3.60E-05	6.62E-05
	B	0.0	0.0	1.20E-03	2.10E-02	3.48E-02	0.0	0.0	0.0	0.0	0.0	1.05E-03
	T	1.20E-04	7.21E-05	1.33E-03	2.11E-02	3.51E-02	1.09E-04	3.63E-05	4.70E-05	2.13E-05	3.60E-05	1.11E-03
Y MARROW	G	4.91E-05	4.63E-05	1.22E-04	1.22E-04	1.17E-04	1.82E-04	4.09E-05	4.88E-05	1.30E-05	1.86E-05	5.60E-05
	B	0.0	0.0	0.0	0.0	0.0	4.88E-02	0.0	0.0	0.0	0.0	1.05E-03
	T	4.91E-05	4.63E-05	1.22E-04	1.22E-04	1.17E-04	4.90E-02	4.09E-05	4.88E-05	1.30E-05	1.86E-05	1.10E-03
T E CL	G	3.78E-05	3.91E-05	1.42E-04	1.42E-04	1.28E-04	1.18E-04	3.83E-05	3.32E-05	2.81E-05	3.28E-05	6.09E-05
	B	0.0	0.0	8.96E-03	1.25E-02	1.61E-02	1.22E-02	0.0	0.0	0.0	0.0	1.05E-03
	T	3.78E-05	3.91E-05	9.10E-03	1.26E-02	1.62E-02	1.23E-02	3.83E-05	3.32E-05	2.81E-05	3.28E-05	1.11E-03
SKIN	G	2.45E-05	2.48E-05	3.99E-05	3.99E-05	3.53E-05	4.13E-05	8.95E-05	2.86E-05	7.16E-05	4.15E-05	4.39E-05
	B	0.0	0.0	0.0	0.0	0.0	0.0	2.82E-02	0.0	0.0	0.0	1.05E-03
	T	2.45E-05	2.48E-05	3.99E-05	3.99E-05	3.53E-05	4.13E-05	2.83E-02	2.86E-05	7.16E-05	4.15E-05	1.09E-03
SPLEEN	G	2.34E-05	7.50E-04	2.85E-05	2.85E-05	4.14E-05	5.58E-05	2.63E-05	5.29E-03	3.57E-06	8.73E-06	6.53E-05
	B	0.0	0.0	0.0	0.0	0.0	0.0	0.0	4.07E-01	0.0	0.0	1.05E-03
	T	2.34E-05	7.50E-04	2.85E-05	2.85E-05	4.14E-05	5.58E-05	2.63E-05	4.12E-01	3.57E-06	8.73E-06	1.11E-03
TESTES	G	0.0	6.33E-06	3.43E-05	3.43E-05	8.13E-06	3.84E-05	4.30E-05	5.83E-06	1.45E-02	4.99E-07	6.87E-05
	B	0.0	0.0	0.0	0.0	0.0	0.0	0.0	0.0	2.09E 00	0.0	1.05E-03
	T	0.0	6.33E-06	3.43E-05	3.43E-05	8.13E-06	3.84E-05	4.30E-05	5.83E-06	2.11E 00	4.99E-07	1.11E-03
THYMUS	G	4.11E-06	3.02E-05	2.04E-05	2.04E-05	4.55E-05	3.62E-05	2.78E-05	7.12E-06	1.16E-06	1.87E-04	8.47E-05
	B	0.0	0.0	0.0	0.0	0.0	0.0	0.0	0.0	0.0	0.0	1.05E-03
	T	4.11E-06	3.02E-05	2.04E-05	2.04E-05	4.55E-05	3.62E-05	2.78E-05	7.12E-06	1.16E-06	1.87E-04	1.13E-03
THYROID	G	1.65E-06	1.00E-05	5.12E-05	5.12E-05	2.98E-05	3.28E-05	3.29E-05	8.20E-06	4.99E-07	2.04E-02	5.68E-05
	B	0.0	0.0	0.0	0.0	0.0	0.0	0.0	0.0	0.0	3.66E 00	1.05E-03
	T	1.65E-06	1.00E-05	5.12E-05	5.12E-05	2.98E-05	3.28E-05	3.29E-05	8.20E-06	4.99E-07	3.68E 00	1.10E-03
UTERUS	G	6.84E-04	2.64E-05	2.76E-05	2.76E-05	7.59E-05	1.91E-05	2.94E-05	9.60E-06	0.0	1.59E-06	7.09E-05
	B	0.0	0.0	0.0	0.0	0.0	0.0	0.0	0.0	0.0	0.0	1.05E-03
	T	6.84E-04	2.64E-05	2.76E-05	2.76E-05	7.59E-05	1.91E-05	2.94E-05	9.60E-06	0.0	1.59E-06	1.12E-03
T BODY	G	8.38E-05	8.28E-05	6.22E-05	6.22E-05	6.85E-05	5.54E-05	4.17E-05	7.24E-05	6.28E-05	5.65E-05	6.17E-05
	B	1.05E-03	1.05E-03	1.05E-03	1.05E-03	1.05E-03	1.05E-03	1.05E-03	1.05E-03	1.05E-03	1.05E-03	1.05E-03
	T	1.13E-03	1.13E-03	1.11E-03	1.11E-03	1.11E-03	1.10E-03	1.09E-03	1.12E-03	1.11E-03	1.10E-03	1.11E-03

*"MUSCLE" VALUES MAY BE USED FOR "SEPARABLE FAT" WITH ADJUSTMENT (SEE TEXT)
PRINCIPLE REFERENCE-KAWADE, K. ET AL., J. PHY. SOC. JAPAN, 29, NO.1, (1970)
DATE DECAY DATA REVIEWED-FEBRUARY 1972

S, AVERAGE DOSE EQUIVALENT PER UNIT ACCUMULATED ACTIVITY (REM/UCI-DAY), FOR 20-CALCIUM-45 (TR=1.630E 02 DAYS)

DATE OF TABLE 11-27-74

TARGET ORGANS		SOURCE ORGANS										
		ADRENALS	BLAD CON	S CONT	SI+CONT	ULI CONT	LLI CONT	KIDNEYS	LIVER	LUNG	RESP LYM NODE	MUSCLE*
ADRENALS	B	2.82E-01	0.0	0.0	0.0	0.0	0.0	0.0	0.0	0.0	0.0	0.0
	T	2.82E-01	0.0	0.0	0.0	0.0	0.0	0.0	0.0	0.0	0.0	0.0
BLAD WALL	B	0.0	9.88E-03	0.0	0.0	0.0	0.0	0.0	0.0	0.0	0.0	0.0
	T	0.0	9.88E-03	0.0	0.0	0.0	0.0	0.0	0.0	0.0	0.0	0.0
GI TRACT S WALL	B	0.0	0.0	7.90E-03	0.0	0.0	0.0	0.0	0.0	0.0	0.0	0.0
	T	0.0	0.0	7.90E-03	0.0	0.0	0.0	0.0	0.0	0.0	0.0	0.0
SI+CONT	B	0.0	0.0	0.0	4.94E-03	0.0	0.0	0.0	0.0	0.0	0.0	0.0
	T	0.0	0.0	0.0	4.94E-03	0.0	0.0	0.0	0.0	0.0	0.0	0.0
ULI WALL	B	0.0	0.0	0.0	0.0	8.98E-03	0.0	0.0	0.0	0.0	0.0	0.0
	T	0.0	0.0	0.0	0.0	8.98E-03	0.0	0.0	0.0	0.0	0.0	0.0
LLI WALL	B	0.0	0.0	0.0	0.0	0.0	1.46E-02	0.0	0.0	0.0	0.0	0.0
	T	0.0	0.0	0.0	0.0	0.0	1.46E-02	0.0	0.0	0.0	0.0	0.0
KIDNEYS	B	0.0	0.0	0.0	0.0	0.0	0.0	1.27E-02	0.0	0.0	0.0	0.0
	T	0.0	0.0	0.0	0.0	0.0	0.0	1.27E-02	0.0	0.0	0.0	0.0
LIVER	B	0.0	0.0	0.0	0.0	0.0	0.0	0.0	2.20E-03	0.0	0.0	0.0
	T	0.0	0.0	0.0	0.0	0.0	0.0	0.0	2.20E-03	0.0	0.0	0.0
LUNGS	B	0.0	0.0	0.0	0.0	0.0	0.0	0.0	0.0	3.95E-03	3.95E-03	0.0
	T	0.0	0.0	0.0	0.0	0.0	0.0	0.0	0.0	3.95E-03	3.95E-03	0.0
RESP LYM NODE	B	0.0	0.0	0.0	0.0	0.0	0.0	0.0	0.0	3.95E-03	2.63E-01	0.0
	T	0.0	0.0	0.0	0.0	0.0	0.0	0.0	0.0	3.95E-03	2.63E-01	0.0
MUSCLE*	B	0.0	0.0	0.0	0.0	0.0	0.0	0.0	0.0	0.0	0.0	1.41E-04
	T	0.0	0.0	0.0	0.0	0.0	0.0	0.0	0.0	0.0	0.0	1.41E-04
OVARIES	B	0.0	0.0	0.0	0.0	0.0	0.0	0.0	0.0	0.0	0.0	0.0
	T	0.0	0.0	0.0	0.0	0.0	0.0	0.0	0.0	0.0	0.0	0.0

20-CALCIUM-45 CONTINUED

S O U R C E O R G A N S

TARGET ORGANS		ADRENALS	BLAD CON	S CONT	SI+CONT	ULI CONT	LLI CONT	KIDNEYS	LIVER	LUNG	RESP LYM NODE	MUSCLE*
PANCREAS	B	0.0	0.0	0.0	0.0	0.0	0.0	0.0	0.0	0.0	0.0	0.0
	T	0.0	0.0	0.0	0.0	0.0	0.0	0.0	0.0	0.0	0.0	0.0
SKELETON BONE	B	0.0	0.0	0.0	0.0	0.0	0.0	0.0	0.0	0.0	0.0	0.0
	T	0.0	0.0	0.0	0.0	0.0	0.0	0.0	0.0	0.0	0.0	0.0
R MARROW	B	0.0	0.0	0.0	0.0	0.0	0.0	0.0	0.0	0.0	0.0	0.0
	T	0.0	0.0	0.0	0.0	0.0	0.0	0.0	0.0	0.0	0.0	0.0
Y MARROW	B	0.0	0.0	0.0	0.0	0.0	0.0	0.0	0.0	0.0	0.0	0.0
	T	0.0	0.0	0.0	0.0	0.0	0.0	0.0	0.0	0.0	0.0	0.0
T E CL	B	0.0	0.0	0.0	0.0	0.0	0.0	0.0	0.0	0.0	0.0	0.0
	T	0.0	0.0	0.0	0.0	0.0	0.0	0.0	0.0	0.0	0.0	0.0
SKIN	B	0.0	0.0	0.0	0.0	0.0	0.0	0.0	0.0	0.0	0.0	0.0
	T	0.0	0.0	0.0	0.0	0.0	0.0	0.0	0.0	0.0	0.0	0.0
SPLEEN	B	0.0	0.0	0.0	0.0	0.0	0.0	0.0	0.0	0.0	0.0	0.0
	T	0.0	0.0	0.0	0.0	0.0	0.0	0.0	0.0	0.0	0.0	0.0
TESTES	B	0.0	0.0	0.0	0.0	0.0	0.0	0.0	0.0	0.0	0.0	0.0
	T	0.0	0.0	0.0	0.0	0.0	0.0	0.0	0.0	0.0	0.0	0.0
THYMUS	B	0.0	0.0	0.0	0.0	0.0	0.0	0.0	0.0	0.0	0.0	0.0
	T	0.0	0.0	0.0	0.0	0.0	0.0	0.0	0.0	0.0	0.0	0.0
THYROID	B	0.0	0.0	0.0	0.0	0.0	0.0	0.0	0.0	0.0	0.0	0.0
	T	0.0	0.0	0.0	0.0	0.0	0.0	0.0	0.0	0.0	0.0	0.0
UTERUS	B	0.0	0.0	0.0	0.0	0.0	0.0	0.0	0.0	0.0	0.0	0.0
	T	0.0	0.0	0.0	0.0	0.0	0.0	0.0	0.0	0.0	0.0	0.0
T BODY	B	5.65E-05	6.35E-06	1.69E-05	4.52E-05	2.69E-05	3.35E-05	5.65E-05	5.65E-05	5.65E-05	5.65E-05	5.65E-05
	T	5.65E-05	6.35E-06	1.69E-05	4.52E-05	2.69E-05	3.35E-05	5.65E-05	5.65E-05	5.65E-05	5.65E-05	5.65E-05

CONTINUED NEXT PAGE

20-CALCIUM-45 CONTINUED

TARGET ORGANS		SOURCE ORGANS										
		OVARIES	PANCREAS	COR BONE	CAN BONE	R MARROW	Y MARROW	SKIN	SPLEEN	TESTES	THYROID	T BODY
ADRENALS	B	0.0	0.0	0.0	0.0	0.0	0.0	0.0	0.0	0.0	0.0	5.65E-05
	T	0.0	0.0	0.0	0.0	0.0	0.0	0.0	0.0	0.0	0.0	5.65E-05
BLAD WALL	B	0.0	0.0	0.0	0.0	0.0	0.0	0.0	0.0	0.0	0.0	5.65E-05
	T	0.0	0.0	0.0	0.0	0.0	0.0	0.0	0.0	0.0	0.0	5.65E-05
GI TRACT S WALL	B	0.0	0.0	0.0	0.0	0.0	0.0	0.0	0.0	0.0	0.0	5.65E-05
	T	0.0	0.0	0.0	0.0	0.0	0.0	0.0	0.0	0.0	0.0	5.65E-05
SI+CONT	B	0.0	0.0	0.0	0.0	0.0	0.0	0.0	0.0	0.0	0.0	5.65E-05
	T	0.0	0.0	0.0	0.0	0.0	0.0	0.0	0.0	0.0	0.0	5.65E-05
ULI WALL	B	0.0	0.0	0.0	0.0	0.0	0.0	0.0	0.0	0.0	0.0	5.65E-05
	T	0.0	0.0	0.0	0.0	0.0	0.0	0.0	0.0	0.0	0.0	5.65E-05
LLI WALL	B	0.0	0.0	0.0	0.0	0.0	0.0	0.0	0.0	0.0	0.0	5.65E-05
	T	0.0	0.0	0.0	0.0	0.0	0.0	0.0	0.0	0.0	0.0	5.65E-05
KIDNEYS	B	0.0	0.0	0.0	0.0	0.0	0.0	0.0	0.0	0.0	0.0	5.65E-05
	T	0.0	0.0	0.0	0.0	0.0	0.0	0.0	0.0	0.0	0.0	5.65E-05
LIVER	B	0.0	0.0	0.0	0.0	0.0	0.0	0.0	0.0	0.0	0.0	5.65E-05
	T	0.0	0.0	0.0	0.0	0.0	0.0	0.0	0.0	0.0	0.0	5.65E-05
LUNGS	B	0.0	0.0	0.0	0.0	0.0	0.0	0.0	0.0	0.0	0.0	5.65E-05
	T	0.0	0.0	0.0	0.0	0.0	0.0	0.0	0.0	0.0	0.0	5.65E-05
RESP LYM NODE	B	0.0	0.0	0.0	0.0	0.0	0.0	0.0	0.0	0.0	0.0	5.65E-05
	T	0.0	0.0	0.0	0.0	0.0	0.0	0.0	0.0	0.0	0.0	5.65E-05
MUSCLE*	B	0.0	0.0	0.0	0.0	0.0	0.0	0.0	0.0	0.0	0.0	5.65E-05
	T	0.0	0.0	0.0	0.0	0.0	0.0	0.0	0.0	0.0	0.0	5.65E-05
OVARIES	B	3.59E-01	0.0	0.0	0.0	0.0	0.0	0.0	0.0	0.0	0.0	5.65E-05
	T	3.59E-01	0.0	0.0	0.0	0.0	0.0	0.0	0.0	0.0	0.0	5.65E-05

20-CALCIUM-45 CONTINUED

S O U R C E O R G A N S

TARGET ORGANS		OVARIES	PANCREAS	COR BONE	CAN BONE	R MARROW	Y MARROW	SKIN	SPLEEN	TESTES	THYROID	T BODY
PANCREAS	B	0.0	3.95E-02	0.0	0.0	0.0	0.0	0.0	0.0	0.0	0.0	5.65E-05
	T	0.0	3.95E-02	0.0	0.0	0.0	0.0	0.0	0.0	0.0	0.0	5.65E-05
SKELETON BONE	B	0.0	0.0	7.90E-04	6.57E-04	8.91E-05	0.0	0.0	0.0	0.0	0.0	5.65E-05
	T	0.0	0.0	7.90E-04	6.57E-04	8.91E-05	0.0	0.0	0.0	0.0	0.0	5.65E-05
R MARROW	B	0.0	0.0	3.39E-06	4.46E-04	2.34E-03	0.0	0.0	0.0	0.0	0.0	5.65E-05
	T	0.0	0.0	3.39E-06	4.46E-04	2.34E-03	0.0	0.0	0.0	0.0	0.0	5.65E-05
Y MARROW	B	0.0	0.0	0.0	0.0	0.0	2.63E-03	0.0	0.0	0.0	0.0	5.65E-05
	T	0.0	0.0	0.0	0.0	0.0	2.63E-03	0.0	0.0	0.0	0.0	5.65E-05
T E CL	B	0.0	0.0	4.38E-04	9.22E-04	7.03E-04	6.59E-04	0.0	0.0	0.0	0.0	5.65E-05
	T	0.0	0.0	4.38E-04	9.22E-04	7.03E-04	6.59E-04	0.0	0.0	0.0	0.0	5.65E-05
SKIN	B	0.0	0.0	0.0	0.0	0.0	0.0	1.52E-03	0.0	0.0	0.0	5.65E-05
	T	0.0	0.0	0.0	0.0	0.0	0.0	1.52E-03	0.0	0.0	0.0	5.65E-05
SPLEEN	B	0.0	0.0	0.0	0.0	0.0	0.0	0.0	2.20E-02	0.0	0.0	5.65E-05
	T	0.0	0.0	0.0	0.0	0.0	0.0	0.0	2.20E-02	0.0	0.0	5.65E-05
TESTES	B	0.0	0.0	0.0	0.0	0.0	0.0	0.0	0.0	1.13E-01	0.0	5.65E-05
	T	0.0	0.0	0.0	0.0	0.0	0.0	0.0	0.0	1.13E-01	0.0	5.65E-05
THYMUS	B	0.0	0.0	0.0	0.0	0.0	0.0	0.0	0.0	0.0	0.0	5.65E-05
	T	0.0	0.0	0.0	0.0	0.0	0.0	0.0	0.0	0.0	0.0	5.65E-05
THYROID	B	0.0	0.0	0.0	0.0	0.0	0.0	0.0	0.0	0.0	1.98E-01	5.65E-05
	T	0.0	0.0	0.0	0.0	0.0	0.0	0.0	0.0	0.0	1.98E-01	5.65E-05
UTERUS	B	0.0	0.0	0.0	0.0	0.0	0.0	0.0	0.0	0.0	0.0	5.65E-05
	T	0.0	0.0	0.0	0.0	0.0	0.0	0.0	0.0	0.0	0.0	5.65E-05
T BODY	B	5.65E-05	5.65E-05	5.65E-05	5.65E-05	5.65E-05	5.65E-05	5.65E-05	5.65E-05	5.65E-05	5.65E-05	5.65E-05
	T	5.65E-05	5.65E-05	5.65E-05	5.65E-05	5.65E-05	5.65E-05	5.65E-05	5.65E-05	5.65E-05	5.65E-05	5.65E-05

*"MUSCLE" VALUES MAY BE USED FOR "SEPARABLE FAT" WITH ADJUSTMENT (SEE TEXT)
PRINCIPLE REFERENCE-NUCLEAR DATA, VOLUME 4, NO. 3-4, JULY 1970
DATE DECAY DATA REVIEWED-FEBRUARY 1972

S, AVERAGE DOSE EQUIVALENT PER UNIT ACCUMULATED ACTIVITY (REM/UCI-DAY), FOR 20-CALCIUM-47 (TR=4.538E 00 DAYS)

DATE OF TABLE 11-27-74

TARGET ORGANS		SOURCE ORGANS										
		ADRENALS	BLAD CON	S CONT	SI+CONT	ULI CONT	LLI CONT	KIDNEYS	LIVER	LUNG	RESP LYM NODE	MUSCLE*
ADRENALS	G	7.77E-02	4.56E-05	5.15E-04	2.07E-04	2.04E-04	8.72E-05	2.07E-03	7.95E-04	3.70E-04	3.70E-04	2.64E-04
	B	1.25E 00	0.0	0.0	0.0	0.0	0.0	0.0	0.0	0.0	0.0	0.0
	T	1.33E 00	4.56E-05	5.15E-04	2.07E-04	2.04E-04	8.72E-05	2.07E-03	7.95E-04	3.70E-04	3.70E-04	2.64E-04
BLAD WALL	G	4.51E-05	1.18E-02	8.46E-05	5.00E-04	3.17E-04	1.01E-03	8.21E-05	4.13E-05	1.73E-05	1.73E-05	3.04E-04
	B	0.0	4.39E-02	0.0	0.0	0.0	0.0	0.0	0.0	0.0	0.0	0.0
	T	4.51E-05	5.56E-02	8.46E-05	5.00E-04	3.17E-04	1.01E-03	8.21E-05	4.13E-05	1.73E-05	1.73E-05	3.04E-04
GI TRACT S WALL	G	4.83E-04	8.26E-05	8.53E-03	6.04E-04	5.71E-04	2.67E-04	5.19E-04	3.38E-04	3.40E-04	3.40E-04	2.45E-04
	B	0.0	0.0	3.51E-02	0.0	0.0	0.0	0.0	0.0	0.0	0.0	0.0
	T	4.83E-04	8.26E-05	4.36E-02	6.04E-04	5.71E-04	2.67E-04	5.19E-04	3.38E-04	3.40E-04	3.40E-04	2.45E-04
SI+CONT	G	1.80E-04	4.62E-04	4.24E-04	5.10E-03	2.61E-03	1.50E-03	4.89E-04	2.80E-04	5.73E-05	5.73E-05	2.65E-04
	B	0.0	0.0	0.0	2.19E-02	0.0	0.0	0.0	0.0	0.0	0.0	0.0
	T	1.80E-04	4.62E-04	4.24E-04	2.70E-02	2.61E-03	1.50E-03	4.89E-04	2.80E-04	5.73E-05	5.73E-05	2.65E-04
ULI WALL	G	1.79E-04	3.42E-04	5.89E-04	3.79E-03	7.16E-03	7.18E-04	5.04E-04	3.88E-04	7.70E-05	7.70E-05	2.81E-04
	B	0.0	0.0	0.0	0.0	3.99E-02	0.0	0.0	0.0	0.0	0.0	0.0
	T	1.79E-04	3.42E-04	5.89E-04	3.79E-03	4.70E-02	7.18E-04	5.04E-04	3.88E-04	7.70E-05	7.70E-05	2.81E-04
LLI WALL	G	5.96E-05	1.17E-03	2.46E-04	1.15E-03	5.23E-04	8.56E-03	1.72E-04	5.96E-05	1.42E-05	1.42E-05	2.90E-04
	B	0.0	0.0	0.0	0.0	0.0	6.50E-02	0.0	0.0	0.0	0.0	0.0
	T	5.96E-05	1.17E-03	2.46E-04	1.15E-03	5.23E-04	7.35E-02	1.72E-04	5.96E-05	1.42E-05	1.42E-05	2.90E-04
KIDNEYS	G	1.81E-03	7.95E-05	5.56E-04	5.15E-04	4.88E-04	1.64E-04	1.20E-02	6.35E-04	1.88E-04	1.88E-04	2.50E-04
	B	0.0	0.0	0.0	0.0	0.0	0.0	5.66E-02	0.0	0.0	0.0	0.0
	T	1.81E-03	7.95E-05	5.56E-04	5.15E-04	4.88E-04	1.64E-04	6.86E-02	6.35E-04	1.88E-04	1.88E-04	2.50E-04
LIVER	G	8.08E-04	5.36E-05	3.42E-04	3.20E-04	4.30E-04	7.63E-05	6.50E-04	4.24E-03	4.06E-04	4.06E-04	1.95E-04
	B	0.0	0.0	0.0	0.0	0.0	0.0	0.0	9.75E-03	0.0	0.0	0.0
	T	8.08E-04	5.36E-05	3.42E-04	3.20E-04	4.30E-04	7.63E-05	6.50E-04	1.40E-02	4.06E-04	4.06E-04	1.95E-04
LUNGS	G	4.12E-04	1.58E-05	3.07E-04	6.06E-05	7.61E-05	2.93E-05	1.70E-04	4.26E-04	2.42E-03	2.42E-03	2.28E-04
	B	0.0	0.0	0.0	0.0	0.0	0.0	0.0	0.0	1.75E-02	1.75E-02	0.0
	T	4.12E-04	1.58E-05	3.07E-04	6.06E-05	7.61E-05	2.93E-05	1.70E-04	4.26E-04	2.00E-02	2.00E-02	2.28E-04
RESP LYM NODE	G	4.12E-04	1.58E-05	3.07E-04	6.06E-05	7.61E-05	2.93E-05	1.70E-04	4.26E-04	2.42E-03	2.42E-03	2.28E-04
	B	0.0	0.0	0.0	0.0	0.0	0.0	0.0	0.0	1.75E-02	1.17E 00	0.0
	T	4.12E-04	1.58E-05	3.07E-04	6.06E-05	7.61E-05	2.93E-05	1.70E-04	4.26E-04	2.00E-02	1.17E 00	2.28E-04
MUSCLE*	G	2.64E-04	3.04E-04	2.45E-04	2.65E-04	2.55E-04	2.90E-04	2.50E-04	1.95E-04	2.28E-04	2.28E-04	2.62E-04
	B	0.0	0.0	0.0	0.0	0.0	0.0	0.0	0.0	0.0	0.0	6.27E-04
	T	2.64E-04	3.04E-04	2.45E-04	2.65E-04	2.55E-04	2.90E-04	2.50E-04	1.95E-04	2.28E-04	2.28E-04	8.89E-04
OVARIES	G	5.31E-05	1.04E-03	2.06E-04	1.52E-03	1.19E-03	2.85E-03	2.44E-04	1.59E-04	3.15E-05	3.15E-05	3.38E-04
	B	0.0	0.0	0.0	0.0	0.0	0.0	0.0	0.0	0.0	0.0	0.0
	T	5.31E-05	1.04E-03	2.06E-04	1.52E-03	1.19E-03	2.85E-03	2.44E-04	1.59E-04	3.15E-05	3.15E-05	3.38E-04

20-CALCIUM-47 CONTINUED

TARGET ORGANS		SOURCE ORGANS										
		ADRENALS	BLAD CON	S CONT	SI+CONT	ULI CONT	LLI CONT	KIDNEYS	LIVER	LUNG	RESP LYM NODE	MUSCLE*
PANCREAS	G	1.47E-03	4.83E-05	2.82E-03	3.15E-04	3.55E-04	1.20E-04	1.14E-03	7.03E-04	4.07E-04	4.07E-04	3.04E-04
	B	0.0	0.0	0.0	0.0	0.0	0.0	0.0	0.0	0.0	0.0	0.0
	T	1.47E-03	4.83E-05	2.82E-03	3.15E-04	3.55E-04	1.20E-04	1.14E-03	7.03E-04	4.07E-04	4.07E-04	3.04E-04
SKELETON BONE	G	2.28E-04	9.58E-05	1.01E-04	1.33E-04	1.19E-04	1.71E-04	1.66E-04	1.25E-04	1.65E-04	1.65E-04	1.96E-04
	B	0.0	0.0	0.0	0.0	0.0	0.0	0.0	0.0	0.0	0.0	0.0
	T	2.28E-04	9.58E-05	1.01E-04	1.33E-04	1.19E-04	1.71E-04	1.66E-04	1.25E-04	1.65E-04	1.65E-04	1.96E-04
R MARROW	G	4.02E-04	1.97E-04	1.66E-04	4.05E-04	3.42E-04	5.03E-04	4.15E-04	1.78E-04	2.10E-04	2.10E-04	2.21E-04
	B	0.0	0.0	0.0	0.0	0.0	0.0	0.0	0.0	0.0	0.0	0.0
	T	4.02E-04	1.97E-04	1.66E-04	4.05E-04	3.42E-04	5.03E-04	4.15E-04	1.78E-04	2.10E-04	2.10E-04	2.21E-04
Y MARROW	G	2.22E-04	8.82E-05	1.41E-04	1.81E-04	1.68E-04	2.12E-04	2.05E-04	1.86E-04	1.70E-04	1.70E-04	1.81E-04
	B	0.0	0.0	0.0	0.0	0.0	0.0	0.0	0.0	0.0	0.0	0.0
	T	2.22E-04	8.82E-05	1.41E-04	1.81E-04	1.68E-04	2.12E-04	2.05E-04	1.86E-04	1.70E-04	1.70E-04	1.81E-04
T E CL	G	2.28E-04	9.58E-05	1.01E-04	1.33E-04	1.19E-04	1.71E-04	1.66E-04	1.25E-04	1.65E-04	1.65E-04	1.96E-04
	B	0.0	0.0	0.0	0.0	0.0	0.0	0.0	0.0	0.0	0.0	0.0
	T	2.28E-04	9.58E-05	1.01E-04	1.33E-04	1.19E-04	1.71E-04	1.66E-04	1.25E-04	1.65E-04	1.65E-04	1.96E-04
SKIN	G	1.32E-04	1.24E-04	1.10E-04	1.06E-04	1.02E-04	1.17E-04	1.19E-04	1.12E-04	1.24E-04	1.24E-04	1.66E-04
	B	0.0	0.0	0.0	0.0	0.0	0.0	0.0	0.0	0.0	0.0	0.0
	T	1.32E-04	1.24E-04	1.10E-04	1.06E-04	1.02E-04	1.17E-04	1.19E-04	1.12E-04	1.24E-04	1.24E-04	1.66E-04
SPLEEN	G	9.95E-04	3.99E-05	1.59E-03	2.83E-04	2.52E-04	1.78E-04	1.39E-03	1.81E-04	3.36E-04	3.36E-04	2.55E-04
	B	0.0	0.0	0.0	0.0	0.0	0.0	0.0	0.0	0.0	0.0	0.0
	T	9.95E-04	3.99E-05	1.59E-03	2.83E-04	2.52E-04	1.78E-04	1.39E-03	1.81E-04	3.36E-04	3.36E-04	2.55E-04
TESTES	G	1.71E-05	7.75E-04	3.03E-05	1.00E-04	8.57E-05	2.70E-04	3.17E-05	3.43E-05	7.15E-06	7.15E-06	2.20E-04
	B	0.0	0.0	0.0	0.0	0.0	0.0	0.0	0.0	0.0	0.0	0.0
	T	1.71E-05	7.75E-04	3.03E-05	1.00E-04	8.57E-05	2.70E-04	3.17E-05	3.43E-05	7.15E-06	7.15E-06	2.20E-04
THYMUS	G	1.13E-04	8.97E-06	1.32E-04	2.96E-05	3.19E-05	1.42E-05	4.33E-05	1.33E-04	7.37E-04	7.37E-04	3.24E-04
	B	0.0	0.0	0.0	0.0	0.0	0.0	0.0	0.0	0.0	0.0	0.0
	T	1.13E-04	8.97E-06	1.32E-04	2.96E-05	3.19E-05	1.42E-05	4.33E-05	1.33E-04	7.37E-04	7.37E-04	3.24E-04
THYROID	G	4.30E-05	3.51E-06	3.19E-05	1.07E-05	1.13E-05	5.59E-06	2.16E-05	3.71E-05	1.96E-04	1.96E-04	2.36E-04
	B	0.0	0.0	0.0	0.0	0.0	0.0	0.0	0.0	0.0	0.0	0.0
	T	4.30E-05	3.51E-06	3.19E-05	1.07E-05	1.13E-05	5.59E-06	2.16E-05	3.71E-05	1.96E-04	1.96E-04	2.36E-04
UTERUS	G	8.54E-05	2.35E-03	1.77E-04	1.40E-03	8.39E-04	9.77E-04	1.77E-04	9.38E-05	3.73E-05	3.73E-05	3.72E-04
	B	0.0	0.0	0.0	0.0	0.0	0.0	0.0	0.0	0.0	0.0	0.0
	T	8.54E-05	2.35E-03	1.77E-04	1.40E-03	8.39E-04	9.77E-04	1.77E-04	9.38E-05	3.73E-05	3.73E-05	3.72E-04
T BODY	G	2.88E-04	3.17E-04	3.03E-04	3.32E-04	3.25E-04	3.23E-04	2.92E-04	2.90E-04	2.46E-04	2.46E-04	2.50E-04
	B	2.51E-04	2.82E-05	7.52E-05	2.01E-04	1.20E-04	1.49E-04	2.51E-04	2.51E-04	2.51E-04	2.51E-04	2.51E-04
	T	5.39E-04	3.45E-04	3.78E-04	5.33E-04	4.45E-04	4.72E-04	5.42E-04	5.41E-04	4.97E-04	4.97E-04	5.01E-04

CONTINUED NEXT PAGE

20-CALCIUM-47 CONTINUED

SOURCE ORGANS

TARGET ORGANS		OVARIES	PANCREAS	COR BONE	CAN BONE	R MARROW	Y MARROW	SKIN	SPLEEN	TESTES	THYROID	T BODY
ADRENALS	G	9.79E-05	1.27E-03	3.44E-04	3.44E-04	4.32E-04	1.72E-04	1.52E-04	1.15E-03	1.71E-05	4.00E-05	4.42E-04
	B	0.0	0.0	0.0	0.0	0.0	0.0	0.0	0.0	0.0	0.0	2.51E-04
	T	9.79E-05	1.27E-03	3.44E-04	3.44E-04	4.32E-04	1.72E-04	1.52E-04	1.15E-03	1.71E-05	4.00E-05	6.93E-04
BLAD WALL	G	1.17E-03	4.11E-05	1.12E-04	1.12E-04	2.01E-04	6.80E-05	1.44E-04	5.52E-05	8.42E-04	3.53E-06	3.33E-04
	B	0.0	0.0	0.0	0.0	0.0	0.0	0.0	0.0	0.0	0.0	2.51E-04
	T	1.17E-03	4.11E-05	1.12E-04	1.12E-04	2.01E-04	6.80E-05	1.44E-04	5.52E-05	8.42E-04	3.53E-06	5.84E-04
GI TRACT S WALL	G	1.59E-04	2.82E-03	1.01E-04	1.01E-04	2.01E-04	1.29E-04	1.16E-04	1.67E-03	1.92E-05	3.04E-05	2.59E-04
	B	0.0	0.0	0.0	0.0	0.0	0.0	0.0	0.0	0.0	0.0	2.51E-04
	T	1.59E-04	2.82E-03	1.01E-04	1.01E-04	2.01E-04	1.29E-04	1.16E-04	1.67E-03	1.92E-05	3.04E-05	5.10E-04
SI+CONT	G	1.89E-03	3.14E-04	1.39E-04	1.39E-04	4.31E-04	1.79E-04	1.07E-04	2.52E-04	9.72E-05	8.75E-06	3.31E-04
	B	0.0	0.0	0.0	0.0	0.0	0.0	0.0	0.0	0.0	0.0	2.51E-04
	T	1.89E-03	3.14E-04	1.39E-04	1.39E-04	4.31E-04	1.79E-04	1.07E-04	2.52E-04	9.72E-05	8.75E-06	5.82E-04
ULI WALL	G	1.79E-03	3.79E-04	1.33E-04	1.33E-04	3.25E-04	1.67E-04	1.08E-04	2.52E-04	6.82E-05	1.02E-05	3.10E-04
	B	0.0	0.0	0.0	0.0	0.0	0.0	0.0	0.0	0.0	0.0	2.51E-04
	T	1.79E-03	3.79E-04	1.33E-04	1.33E-04	3.25E-04	1.67E-04	1.08E-04	2.52E-04	6.82E-05	1.02E-05	5.61E-04
LLI WALL	G	2.27E-03	1.15E-04	1.78E-04	1.78E-04	4.95E-04	1.60E-04	1.12E-04	1.15E-04	4.24E-04	4.86E-06	3.34E-04
	B	0.0	0.0	0.0	0.0	0.0	0.0	0.0	0.0	0.0	0.0	2.51E-04
	T	2.27E-03	1.15E-04	1.78E-04	1.78E-04	4.95E-04	1.60E-04	1.12E-04	1.15E-04	4.24E-04	4.86E-06	5.85E-04
KIDNEYS	G	1.89E-04	1.03E-03	1.91E-04	1.91E-04	4.31E-04	2.03E-04	1.35E-04	1.41E-03	2.88E-05	2.72E-05	2.92E-04
	B	0.0	0.0	0.0	0.0	0.0	0.0	0.0	0.0	0.0	0.0	2.51E-04
	T	1.89E-04	1.03E-03	1.91E-04	1.91E-04	4.31E-04	2.03E-04	1.35E-04	1.41E-03	2.88E-05	2.72E-05	5.43E-04
LIVER	G	1.17E-04	6.84E-04	1.28E-04	1.28E-04	1.81E-04	1.95E-04	1.21E-04	1.91E-04	2.08E-05	3.75E-05	2.96E-04
	B	0.0	0.0	0.0	0.0	0.0	0.0	0.0	0.0	0.0	0.0	2.51E-04
	T	1.17E-04	6.84E-04	1.28E-04	1.28E-04	1.81E-04	1.95E-04	1.21E-04	1.91E-04	2.08E-05	3.75E-05	5.47E-04
LUNGS	G	2.96E-05	3.87E-04	1.72E-04	1.72E-04	2.18E-04	1.83E-04	1.28E-04	3.56E-04	7.08E-06	1.94E-04	2.36E-04
	B	0.0	0.0	0.0	0.0	0.0	0.0	0.0	0.0	0.0	0.0	2.51E-04
	T	2.96E-05	3.87E-04	1.72E-04	1.72E-04	2.18E-04	1.83E-04	1.28E-04	3.56E-04	7.08E-06	1.94E-04	4.87E-04
RESP LYM NODE	G	2.96E-05	3.87E-04	1.72E-04	1.72E-04	2.18E-04	1.83E-04	1.28E-04	3.56E-04	7.08E-06	1.94E-04	2.36E-04
	B	0.0	0.0	0.0	0.0	0.0	0.0	0.0	0.0	0.0	0.0	2.51E-04
	T	2.96E-05	3.87E-04	1.72E-04	1.72E-04	2.18E-04	1.83E-04	1.28E-04	3.56E-04	7.08E-06	1.94E-04	4.87E-04
MUSCLE*	G	3.38E-04	3.04E-04	1.96E-04	1.96E-04	2.28E-04	1.80E-04	1.66E-04	2.55E-04	2.20E-04	2.36E-04	2.50E-04
	B	0.0	0.0	0.0	0.0	0.0	0.0	0.0	0.0	0.0	0.0	2.51E-04
	T	3.38E-04	3.04E-04	1.96E-04	1.96E-04	2.28E-04	1.80E-04	1.66E-04	2.55E-04	2.20E-04	2.36E-04	5.01E-04
OVARIES	G	1.28E-01	1.51E-04	1.63E-04	1.63E-04	5.58E-04	1.64E-04	1.01E-04	1.12E-04	3.89E-50	5.76E-06	3.04E-04
	B	1.60E 00	0.0	0.0	0.0	0.0	0.0	0.0	0.0	0.0	0.0	2.51E-04
	T	1.72E 00	1.51E-04	1.63E-04	1.63E-04	5.58E-04	1.64E-04	1.01E-04	1.12E-04	3.89E-50	5.76E-06	5.54E-04

20-CALCIUM-47 CONTINUED

TARGET ORGANS		SOURCE ORGANS										
		OVARIES	PANCREAS	COR BONE	CAN BONE	R MARROW	Y MARROW	SKIN	SPLEEN	TESTES	THYROID	T BODY
PANCREAS	G	1.28E-04	3.57E-02	1.91E-04	1.91E-04	2.14E-04	1.85E-04	9.42E-05	2.99E-03	2.16E-05	4.90E-05	2.79E-04
	B	0.0	1.75E-01	0.0	0.0	0.0	0.0	0.0	0.0	0.0	0.0	2.51E-04
	T	1.28E-04	2.11E-01	1.91E-04	1.91E-04	2.14E-04	1.85E-04	9.42E-05	2.99E-03	2.16E-05	4.90E-05	5.29E-04
SKELETON BONE	G	1.52E-04	1.55E-04	5.78E-04	5.78E-04	3.85E-04	4.33E-04	1.52E-04	1.32E-04	1.13E-04	1.29E-04	2.46E-04
	B	0.0	0.0	3.51E-03	2.14E-03	9.15E-04	0.0	0.0	0.0	0.0	0.0	2.51E-04
	T	1.52E-04	1.55E-04	4.09E-03	2.71E-03	1.30E-03	4.33E-04	1.52E-04	1.32E-04	1.13E-04	1.29E-04	4.97E-04
R MARROW	G	4.88E-04	2.87E-04	5.24E-04	5.24E-04	1.22E-03	4.42E-04	1.43E-04	1.90E-04	8.71E-05	1.41E-04	2.70E-04
	B	0.0	0.0	1.52E-04	4.58E-03	8.65E-03	0.0	0.0	0.0	0.0	0.0	2.51E-04
	T	4.88E-04	2.87E-04	6.75E-04	5.10E-03	9.86E-03	4.42E-04	1.43E-04	1.90E-04	8.71E-05	1.41E-04	5.20E-04
Y MARROW	G	1.99E-04	1.83E-04	4.98E-04	4.98E-04	4.75E-04	7.34E-04	1.62E-04	1.96E-04	5.07E-05	7.17E-05	2.29E-04
	B	0.0	0.0	0.0	0.0	0.0	1.17E-02	0.0	0.0	0.0	0.0	2.51E-04
	T	1.99E-04	1.83E-04	4.98E-04	4.98E-04	4.75E-04	1.24E-02	1.62E-04	1.96E-04	5.07E-05	7.17E-05	4.79E-04
T E CL	G	1.52E-04	1.55E-04	5.78E-04	5.78E-04	5.17E-04	4.77E-04	1.52E-04	1.32E-04	1.13E-04	1.29E-04	2.46E-04
	B	0.0	0.0	2.23E-03	3.67E-03	3.40E-03	2.92E-03	0.0	0.0	0.0	0.0	2.51E-04
	T	1.52E-04	1.55E-04	2.80E-03	4.25E-03	3.92E-03	3.40E-03	1.52E-04	1.32E-04	1.13E-04	1.29E-04	4.97E-04
SKIN	G	9.89E-05	9.91E-05	1.56E-04	1.56E-04	1.37E-04	1.66E-04	3.61E-04	1.14E-04	2.80E-04	1.64E-04	1.71E-04
	B	0.0	0.0	0.0	0.0	0.0	0.0	6.75E-03	0.0	0.0	0.0	2.51E-04
	T	9.89E-05	9.91E-05	1.56E-04	1.56E-04	1.37E-04	1.66E-04	7.11E-03	1.14E-04	2.80E-04	1.64E-04	4.22E-04
SPLEEN	G	9.99E-05	3.04E-03	1.33E-04	1.33E-04	1.73E-04	2.09E-04	1.21E-04	2.15E-02	1.30E-05	3.58E-05	2.82E-04
	B	0.0	0.0	0.0	0.0	0.0	0.0	0.0	9.75E-02	0.0	0.0	2.51E-04
	T	9.99E-05	3.04E-03	1.33E-04	1.33E-04	1.73E-04	2.09E-04	1.21E-04	1.19E-01	1.30E-05	3.58E-05	5.33E-04
TESTES	G	3.89E-50	2.33E-05	1.25E-04	1.25E-04	5.18E-05	1.57E-04	1.67E-04	2.17E-05	5.97E-02	1.61E-06	2.89E-04
	B	0.0	0.0	0.0	0.0	0.0	0.0	0.0	0.0	5.01E-01	0.0	2.51E-04
	T	3.89E-50	2.33E-05	1.25E-04	1.25E-04	5.18E-05	1.57E-04	1.67E-04	2.17E-05	5.61E-01	1.61E-06	5.40E-04
THYMUS	G	1.51E-05	1.08E-04	1.12E-04	1.12E-04	1.51E-04	1.12E-04	1.19E-04	7.02E-05	3.95E-06	7.05E-04	2.85E-04
	B	0.0	0.0	0.0	0.0	0.0	0.0	0.0	0.0	0.0	0.0	2.51E-04
	T	1.51E-05	1.08E-04	1.12E-04	1.12E-04	1.51E-04	1.12E-04	1.19E-04	7.02E-05	3.95E-06	7.05E-04	5.36E-04
THYROID	G	5.75E-06	2.49E-05	1.59E-04	1.59E-04	1.41E-04	1.11E-04	1.29E-04	3.12E-05	1.61E-06	8.18E-02	2.49E-04
	B	0.0	0.0	0.0	0.0	0.0	0.0	0.0	0.0	0.0	8.77E-01	2.51E-04
	T	5.75E-06	2.49E-05	1.59E-04	1.59E-04	1.41E-04	1.11E-04	1.29E-04	3.12E-05	1.61E-06	9.59E-01	4.99E-04
UTERUS	G	2.79E-03	1.06E-04	1.34E-04	1.34E-04	2.95E-04	9.40E-05	1.25E-04	6.95E-05	3.89E-50	5.52E-06	3.41E-04
	B	0.0	0.0	0.0	0.0	0.0	0.0	0.0	0.0	0.0	0.0	2.51E-04
	T	2.79E-03	1.06E-04	1.34E-04	1.34E-04	2.95E-04	9.40E-05	1.25E-04	6.95E-05	3.89E-50	5.52E-06	5.92E-04
T BODY	G	3.37E-04	3.31E-04	2.49E-04	2.49E-04	2.74E-04	2.22E-04	1.66E-04	2.90E-04	2.50E-04	2.26E-04	2.48E-04
	B	2.51E-04	2.51E-04	2.51E-04	2.51E-04	2.51E-04	2.51E-04	2.51E-04	2.51E-04	2.51E-04	2.51E-04	2.51E-04
	T	5.87E-04	5.81E-04	4.99E-04	4.99E-04	5.25E-04	4.72E-04	4.17E-04	5.40E-04	5.00E-04	4.76E-04	4.99E-04

*"MUSCLE" VALUES MAY BE USED FOR "SEPARABLE FAT" WITH ADJUSTMENT (SEE TEXT)
PRINCIPLE REFERENCE-WOOD, R. E., PALMS, J. M. AND VENUGOPALA, RAO, NUCL. PHYS. A126, 300 (1969)
DATE DECAY DATA REVIEWED-FEBRUARY 1972

S, AVERAGE DOSE EQUIVALENT PER UNIT ACCUMULATED ACTIVITY (REM/UCI-DAY), FOR 20-CALCIUM-49 (TR=8.800E 00 MIN)

DATE OF TABLE 11-27-74

TARGET ORGANS		SOURCE ORGANS										
		ADRENALS	BLAD CON	S CONT	SI+CONT	ULI CONT	LLI CONT	KIDNEYS	LIVER	LUNG	RESP LYM NODE	MUSCLE*
ADRENALS	G	1.84E-01	1.28E-04	1.01E-03	5.66E-04	5.72E-04	2.26E-04	4.54E-03	2.76E-03	7.48E-04	7.48E-04	6.43E-04
	B	3.19E 00	0.0	0.0	0.0	0.0	0.0	0.0	0.0	0.0	0.0	0.0
	T	3.37E 00	1.28E-04	1.01E-03	5.66E-04	5.72E-04	2.26E-04	4.54E-03	2.76E-03	7.48E-04	7.48E-04	6.43E-04
BLAD WALL	G	1.63E-04	2.80E-02	2.05E-04	1.06E-03	8.87E-04	2.09E-03	2.58E-04	1.54E-04	5.54E-05	5.54E-05	7.45E-04
	B	0.0	1.12E-01	0.0	0.0	0.0	0.0	0.0	0.0	0.0	0.0	0.0
	T	1.63E-04	1.40E-01	2.05E-04	1.06E-03	8.87E-04	2.09E-03	2.58E-04	1.54E-04	5.54E-05	5.54E-05	7.45E-04
GI TRACT S WALL	G	1.07E-03	2.67E-04	2.03E-02	1.40E-03	1.41E-03	8.33E-04	1.44E-03	8.97E-04	7.16E-04	7.16E-04	6.00E-04
	B	0.0	0.0	8.93E-02	0.0	0.0	0.0	0.0	0.0	0.0	0.0	0.0
	T	1.07E-03	2.67E-04	1.10E-01	1.40E-03	1.41E-03	8.33E-04	1.44E-03	8.97E-04	7.16E-04	7.16E-04	6.00E-04
SI+CONT	G	4.55E-04	1.19E-03	1.12E-03	1.18E-02	5.92E-03	3.56E-03	1.17E-03	7.04E-04	1.83E-04	1.83E-04	6.53E-04
	B	0.0	0.0	0.0	5.58E-02	0.0	0.0	0.0	0.0	0.0	0.0	0.0
	T	4.55E-04	1.19E-03	1.12E-03	6.76E-02	5.92E-03	3.56E-03	1.17E-03	7.04E-04	1.83E-04	1.83E-04	6.53E-04
ULI WALL	G	4.87E-04	8.88E-04	1.31E-03	8.92E-03	1.67E-02	1.66E-03	1.08E-03	9.57E-04	2.57E-04	2.57E-04	6.88E-04
	B	0.0	0.0	0.0	0.0	1.01E-01	0.0	0.0	0.0	0.0	0.0	0.0
	T	4.87E-04	8.88E-04	1.31E-03	8.92E-03	1.18E-01	1.66E-03	1.08E-03	9.57E-04	2.57E-04	2.57E-04	6.88E-04
LLI WALL	G	1.99E-04	2.63E-03	5.26E-04	2.91E-03	1.11E-03	1.95E-02	4.34E-04	1.96E-04	4.11E-05	4.11E-05	7.13E-04
	B	0.0	0.0	0.0	0.0	0.0	1.65E-01	0.0	0.0	0.0	0.0	0.0
	T	1.99E-04	2.63E-03	5.26E-04	2.91E-03	1.11E-03	1.85E-01	4.34E-04	1.96E-04	4.11E-05	4.11E-05	7.13E-04
KIDNEYS	G	4.50E-03	2.14E-04	1.30E-03	1.16E-03	1.08E-03	4.72E-04	2.84E-02	1.51E-03	4.22E-04	4.22E-04	6.18E-04
	B	0.0	0.0	0.0	0.0	0.0	0.0	1.44E-01	0.0	0.0	0.0	0.0
	T	4.50E-03	2.14E-04	1.30E-03	1.16E-03	1.08E-03	4.72E-04	1.72E-01	1.51E-03	4.22E-04	4.22E-04	6.18E-04
LIVER	G	1.93E-03	1.78E-04	8.76E-04	7.81E-04	1.08E-03	1.95E-04	1.56E-03	9.86E-03	9.83E-04	9.83E-04	4.85E-04
	B	0.0	0.0	0.0	0.0	0.0	0.0	0.0	2.48E-02	0.0	0.0	0.0
	T	1.93E-03	1.78E-04	8.76E-04	7.81E-04	1.08E-03	1.95E-04	1.56E-03	3.47E-02	9.83E-04	9.83E-04	4.85E-04
LUNGS	G	9.76E-04	6.59E-05	7.33E-04	1.85E-04	1.93E-04	1.07E-04	4.45E-04	9.94E-04	5.53E-03	5.53E-03	5.54E-04
	B	0.0	0.0	0.0	0.0	0.0	0.0	0.0	0.0	4.46E-02	4.46E-02	0.0
	T	9.76E-04	6.59E-05	7.33E-04	1.85E-04	1.93E-04	1.07E-04	4.45E-04	9.94E-04	5.02E-02	5.02E-02	5.54E-04
RESP LYM NODE	G	9.76E-04	6.59E-05	7.33E-04	1.85E-04	1.93E-04	1.07E-04	4.45E-04	9.94E-04	5.53E-03	5.53E-03	5.54E-04
	B	0.0	0.0	0.0	0.0	0.0	0.0	0.0	0.0	4.46E-02	2.98E 00	0.0
	T	9.76E-04	6.59E-05	7.33E-04	1.85E-04	1.93E-04	1.07E-04	4.45E-04	9.94E-04	5.02E-02	2.98E 00	5.54E-04
MUSCLE*	G	6.43E-04	7.45E-04	6.00E-04	6.53E-04	6.32E-04	7.13E-04	6.18E-04	4.85E-04	5.54E-04	5.54E-04	6.38E-04
	B	0.0	0.0	0.0	0.0	0.0	0.0	0.0	0.0	0.0	0.0	1.59E-03
	T	6.43E-04	7.45E-04	6.00E-04	6.53E-04	6.32E-04	7.13E-04	6.18E-04	4.85E-04	5.54E-04	5.54E-04	2.23E-03
OVARIES	G	2.49E-04	2.51E-03	4.20E-04	4.10E-03	4.19E-03	6.41E-03	2.41E-04	3.30E-04	9.25E-05	9.25E-05	8.26E-04
	B	0.0	0.0	0.0	0.0	0.0	0.0	0.0	0.0	0.0	0.0	0.0
	T	2.49E-04	2.51E-03	4.20E-04	4.10E-03	4.19E-03	6.41E-03	2.41E-04	3.30E-04	9.25E-05	9.25E-05	8.26E-04

20-CALCIUM-49 CONTINUED

SOURCE ORGANS

TARGET ORGANS		ADRENALS	BLAD CON	S CONT	SI+CONT	ULI CONT	LLI CONT	KIDNEYS	LIVER	LUNG	RESP LYM NODE	MUSCLE*
PANCREAS	G	3.50E-03	1.71E-04	6.14E-03	8.77E-04	1.20E-03	3.02E-04	2.40E-03	1.49E-03	9.69E-04	9.69E-04	7.42E-04
	B	0.0	0.0	0.0	0.0	0.0	0.0	0.0	0.0	0.0	0.0	0.0
	T	3.50E-03	1.71E-04	6.14E-03	8.77E-04	1.20E-03	3.02E-04	2.40E-03	1.49E-03	9.69E-04	9.69E-04	7.42E-04
SKELETON BONE	G	5.61E-04	2.61E-04	2.68E-04	3.35E-04	3.02E-04	4.28E-04	4.17E-04	3.22E-04	4.22E-04	4.22E-04	4.90E-04
	B	0.0	0.0	0.0	0.0	0.0	0.0	0.0	0.0	0.0	0.0	0.0
	T	5.61E-04	2.61E-04	2.68E-04	3.35E-04	3.02E-04	4.28E-04	4.17E-04	3.22E-04	4.22E-04	4.22E-04	4.90E-04
R MARROW	G	1.00E-03	5.15E-04	4.37E-04	9.74E-04	8.50E-04	1.21E-03	1.01E-03	4.59E-04	5.32E-04	5.32E-04	5.45E-04
	B	0.0	0.0	0.0	0.0	0.0	0.0	0.0	0.0	0.0	0.0	0.0
	T	1.00E-03	5.15E-04	4.37E-04	9.74E-04	8.50E-04	1.21E-03	1.01E-03	4.59E-04	5.32E-04	5.32E-04	5.45E-04
Y MARROW	G	5.59E-04	2.54E-04	3.73E-04	4.54E-04	4.14E-04	5.18E-04	5.07E-04	4.66E-04	4.44E-04	4.44E-04	4.57E-04
	B	0.0	0.0	0.0	0.0	0.0	0.0	0.0	0.0	0.0	0.0	0.0
	T	5.59E-04	2.54E-04	3.73E-04	4.54E-04	4.14E-04	5.18E-04	5.07E-04	4.66E-04	4.44E-04	4.44E-04	4.57E-04
T E CL	G	5.61E-04	2.61E-04	2.68E-04	3.35E-04	3.02E-04	4.28E-04	4.17E-04	3.22E-04	4.22E-04	4.22E-04	4.90E-04
	B	0.0	0.0	0.0	0.0	0.0	0.0	0.0	0.0	0.0	0.0	0.0
	T	5.61E-04	2.61E-04	2.68E-04	3.35E-04	3.02E-04	4.28E-04	4.17E-04	3.22E-04	4.22E-04	4.22E-04	4.90E-04
SKIN	G	3.13E-04	3.20E-04	3.00E-04	2.63E-04	2.88E-04	3.10E-04	3.22E-04	3.06E-04	3.08E-04	3.08E-04	4.11E-04
	B	0.0	0.0	0.0	0.0	0.0	0.0	0.0	0.0	0.0	0.0	0.0
	T	3.13E-04	3.20E-04	3.00E-04	2.63E-04	2.88E-04	3.10E-04	3.22E-04	3.06E-04	3.08E-04	3.08E-04	4.11E-04
SPLEEN	G	2.37E-03	1.18E-04	3.40E-03	6.74E-04	6.03E-04	4.24E-04	3.11E-03	4.12E-04	9.47E-04	9.47E-04	6.23E-04
	B	0.0	0.0	0.0	0.0	0.0	0.0	0.0	0.0	0.0	0.0	0.0
	T	2.37E-03	1.18E-04	3.40E-03	6.74E-04	6.03E-04	4.24E-04	3.11E-03	4.12E-04	9.47E-04	9.47E-04	6.23E-04
TESTES	G	5.55E-05	2.08E-03	9.29E-05	2.53E-04	2.59E-04	7.76E-04	9.34E-05	7.57E-05	2.71E-05	2.71E-05	6.08E-04
	B	0.0	0.0	0.0	0.0	0.0	0.0	0.0	0.0	0.0	0.0	0.0
	T	5.55E-05	2.08E-03	9.29E-05	2.53E-04	2.59E-04	7.76E-04	9.34E-05	7.57E-05	2.71E-05	2.71E-05	6.08E-04
THYMUS	G	3.17E-04	3.28E-05	2.44E-04	8.81E-05	9.37E-05	4.70E-05	1.25E-04	5.49E-04	1.58E-03	1.58E-03	9.49E-04
	B	0.0	0.0	0.0	0.0	0.0	0.0	0.0	0.0	0.0	0.0	0.0
	T	3.17E-04	3.28E-05	2.44E-04	8.81E-05	9.37E-05	4.70E-05	1.25E-04	5.49E-04	1.58E-03	1.58E-03	9.49E-04
THYROID	G	1.14E-04	1.57E-05	9.39E-05	3.78E-05	3.94E-05	2.23E-05	6.76E-05	1.07E-04	4.50E-04	4.50E-04	5.72E-04
	B	0.0	0.0	0.0	0.0	0.0	0.0	0.0	0.0	0.0	0.0	0.0
	T	1.14E-04	1.57E-05	9.39E-05	3.78E-05	3.94E-05	2.23E-05	6.76E-05	1.07E-04	4.50E-04	4.50E-04	5.72E-04
UTERUS	G	1.65E-04	5.82E-03	5.50E-04	3.23E-03	2.06E-03	2.24E-03	5.09E-04	2.51E-04	1.26E-04	1.26E-04	1.05E-03
	B	0.0	0.0	0.0	0.0	0.0	0.0	0.0	0.0	0.0	0.0	0.0
	T	1.65E-04	5.82E-03	5.50E-04	3.23E-03	2.06E-03	2.24E-03	5.09E-04	2.51E-04	1.26E-04	1.26E-04	1.05E-03
T BODY	G	7.01E-04	7.77E-04	7.37E-04	8.03E-04	7.90E-04	7.87E-04	7.15E-04	7.08E-04	5.98E-04	5.98E-04	6.11E-04
	B	6.38E-04	7.17E-05	1.91E-04	5.10E-04	3.04E-04	3.78E-04	6.38E-04	6.38E-04	6.38E-04	6.38E-04	6.38E-04
	T	1.34E-03	8.49E-04	9.29E-04	1.31E-03	1.09E-03	1.17E-03	1.35E-03	1.35E-03	1.24E-03	1.24E-03	1.25E-03

CONTINUED NEXT PAGE

20-CALCIUM-49 CONTINUED

TARGET ORGANS		SOURCE ORGANS										
		OVARIES	PANCREAS	COR BONE	CAN BONE	R MARROW	Y MARROW	SKIN	SPLEEN	TESTES	THYROID	T BODY
ADRENALS	G	2.49E-04	2.47E-03	6.15E-04	6.15E-04	1.08E-03	5.17E-04	4.55E-04	2.48E-03	5.55E-05	1.14E-04	7.67E-04
	B	0.0	0.0	0.0	0.0	0.0	0.0	0.0	0.0	0.0	0.0	6.38E-04
	T	2.49E-04	2.47E-03	6.15E-04	6.15E-04	1.08E-03	5.17E-04	4.55E-04	2.48E-03	5.55E-05	1.14E-04	1.41E-03
BLAD WALL	G	2.54E-03	2.13E-04	3.09E-04	3.09E-04	4.90E-04	2.57E-04	2.94E-04	1.52E-04	1.81E-03	1.57E-05	8.31E-04
	B	0.0	0.0	0.0	0.0	0.0	0.0	0.0	0.0	0.0	0.0	6.38E-04
	T	2.54E-03	2.13E-04	3.09E-04	3.09E-04	4.90E-04	2.57E-04	2.94E-04	1.52E-04	1.81E-03	1.57E-05	1.47E-03
GI TRACT S WALL	G	5.05E-04	6.83E-03	2.55E-04	2.55E-04	4.42E-04	3.82E-04	2.82E-04	3.72E-03	7.49E-05	7.41E-05	6.83E-04
	B	0.0	0.0	0.0	0.0	0.0	0.0	0.0	0.0	0.0	0.0	6.38E-04
	T	5.05E-04	6.83E-03	2.55E-04	2.55E-04	4.42E-04	3.82E-04	2.82E-04	3.72E-03	7.49E-05	7.41E-05	1.32E-03
SI+CONT	G	4.47E-03	7.80E-04	3.45E-04	3.45E-04	1.06E-03	4.68E-04	2.68E-04	6.10E-04	2.74E-04	3.21E-05	8.17E-04
	B	0.0	0.0	0.0	0.0	0.0	0.0	0.0	0.0	0.0	0.0	6.38E-04
	T	4.47E-03	7.80E-04	3.45E-04	3.45E-04	1.06E-03	4.68E-04	2.68E-04	6.10E-04	2.74E-04	3.21E-05	1.45E-03
ULI WALL	G	4.07E-03	8.72E-04	3.22E-04	3.22E-04	9.23E-04	3.99E-04	2.60E-04	5.96E-04	2.88E-04	4.97E-05	7.43E-04
	B	0.0	0.0	0.0	0.0	0.0	0.0	0.0	0.0	0.0	0.0	6.38E-04
	T	4.07E-03	8.72E-04	3.22E-04	3.22E-04	9.23E-04	3.99E-04	2.60E-04	5.96E-04	2.88E-04	4.97E-05	1.38E-03
LLI WALL	G	5.75E-03	2.84E-04	4.22E-04	4.22E-04	1.22E-03	3.95E-04	2.76E-04	3.19E-04	1.19E-03	1.98E-05	8.53E-04
	B	0.0	0.0	0.0	0.0	0.0	0.0	0.0	0.0	0.0	0.0	6.38E-04
	T	5.75E-03	2.84E-04	4.22E-04	4.22E-04	1.22E-03	3.95E-04	2.76E-04	3.19E-04	1.19E-03	1.98E-05	1.49E-03
KIDNEYS	G	5.24E-04	2.48E-03	3.81E-04	3.81E-04	1.06E-03	4.75E-04	3.41E-04	3.25E-03	9.62E-05	5.82E-05	6.86E-04
	B	0.0	0.0	0.0	0.0	0.0	0.0	0.0	0.0	0.0	0.0	6.38E-04
	T	5.24E-04	2.48E-03	3.81E-04	3.81E-04	1.06E-03	4.75E-04	3.41E-04	3.25E-03	9.62E-05	5.82E-05	1.32E-03
LIVER	G	3.20E-04	1.62E-03	3.61E-04	3.61E-04	4.55E-04	4.72E-04	3.12E-04	4.85E-04	6.48E-05	1.32E-04	7.21E-04
	B	0.0	0.0	0.0	0.0	0.0	0.0	0.0	0.0	0.0	0.0	6.38E-04
	T	3.20E-04	1.62E-03	3.61E-04	3.61E-04	4.55E-04	4.72E-04	3.12E-04	4.85E-04	6.48E-05	1.32E-04	1.36E-03
LUNGS	G	1.06E-04	9.28E-04	4.24E-04	4.24E-04	5.03E-04	4.25E-04	3.23E-04	9.21E-04	2.40E-05	5.17E-04	5.84E-04
	B	0.0	0.0	0.0	0.0	0.0	0.0	0.0	0.0	0.0	0.0	6.38E-04
	T	1.06E-04	9.28E-04	4.24E-04	4.24E-04	5.03E-04	4.25E-04	3.23E-04	9.21E-04	2.40E-05	5.17E-04	1.22E-03
RESP LYM NODE	G	1.06E-04	9.28E-04	4.24E-04	4.24E-04	5.03E-04	4.25E-04	3.23E-04	9.21E-04	2.40E-05	5.17E-04	5.84E-04
	B	0.0	0.0	0.0	0.0	0.0	0.0	0.0	0.0	0.0	0.0	6.38E-04
	T	1.06E-04	9.28E-04	4.24E-04	4.24E-04	5.03E-04	4.25E-04	3.23E-04	9.21E-04	2.40E-05	5.17E-04	1.22E-03
MUSCLE*	G	8.26E-04	7.42E-04	4.90E-04	4.90E-04	5.62E-04	4.47E-04	4.11E-04	6.23E-04	6.08E-04	5.72E-04	6.11E-04
	B	0.0	0.0	0.0	0.0	0.0	0.0	0.0	0.0	0.0	0.0	6.38E-04
	T	8.26E-04	7.42E-04	4.90E-04	4.90E-04	5.62E-04	4.47E-04	4.11E-04	6.23E-04	6.08E-04	5.72E-04	1.25E-03
OVARIES	G	3.04E-01	3.34E-04	3.94E-04	3.94E-04	1.24E-03	4.00E-04	2.55E-04	3.22E-05	0.0	2.31E-05	1.02E-03
	B	4.06E 00	0.0	0.0	0.0	0.0	0.0	0.0	0.0	0.0	0.0	6.38E-04
	T	4.36E 00	3.34E-04	3.94E-04	3.94E-04	1.24E-03	4.00E-04	2.55E-04	3.22E-05	0.0	2.31E-05	1.66E-03

20-CALCIUM-49 CONTINUED

SOURCE ORGANS

TARGET ORGANS		OVARIES	PANCREAS	COR BONE	CAN BONE	R MARROW	Y MARROW	SKIN	SPLEEN	TESTES	THYROID	T BODY
PANCREAS	G	3.18E-04	8.14E-02	3.83E-04	3.83E-04	5.79E-04	2.97E-04	2.53E-04	6.84E-03	8.46E-05	1.10E-04	9.19E-04
	B	0.0	4.46E-01	0.0	0.0	0.0	0.0	0.0	0.0	0.0	0.0	6.38E-04
	T	3.18E-04	5.28E-01	3.83E-04	3.83E-04	5.79E-04	2.97E-04	2.53E-04	6.84E-03	8.46E-05	1.10E-04	1.56E-03
SKELETON BONE	G	3.78E-04	3.76E-04	1.36E-03	1.36E-03	9.26E-04	1.04E-03	3.74E-04	3.29E-04	2.92E-04	3.35E-04	6.00E-04
	B	0.0	0.0	8.93E-03	5.10E-03	2.55E-03	0.0	0.0	0.0	0.0	0.0	6.38E-04
	T	3.78E-04	3.76E-04	1.03E-02	6.47E-03	3.48E-03	1.04E-03	3.74E-04	3.29E-04	2.92E-04	3.35E-04	1.24E-03
R MARROW	G	1.13E-03	6.84E-04	1.23E-03	1.23E-03	2.89E-03	1.04E-03	3.50E-04	4.80E-04	2.41E-04	3.65E-04	6.54E-04
	B	0.0	0.0	7.11E-04	1.28E-02	2.13E-02	0.0	0.0	0.0	0.0	0.0	6.38E-04
	T	1.13E-03	6.84E-04	1.94E-03	1.40E-02	2.41E-02	1.04E-03	3.50E-04	4.80E-04	2.41E-04	3.65E-04	1.29E-03
Y MARROW	G	4.88E-04	4.40E-04	1.17E-03	1.17E-03	1.14E-03	1.75E-03	3.99E-04	4.86E-04	1.52E-04	1.92E-04	5.64E-04
	B	0.0	0.0	0.0	0.0	0.0	2.98E-02	0.0	0.0	0.0	0.0	6.38E-04
	T	4.88E-04	4.40E-04	1.17E-03	1.17E-03	1.14E-03	3.15E-02	3.99E-04	4.86E-04	1.52E-04	1.92E-04	1.20E-03
T E CL	G	3.78E-04	3.76E-04	1.36E-03	1.36E-03	1.24E-03	1.14E-03	3.74E-04	3.29E-04	2.92E-04	3.35E-04	6.00E-04
	B	0.0	0.0	5.48E-03	7.74E-03	9.72E-03	7.44E-03	0.0	0.0	0.0	0.0	6.38E-04
	T	3.78E-04	3.76E-04	6.85E-03	9.10E-03	1.10E-02	8.58E-03	3.74E-04	3.29E-04	2.92E-04	3.35E-04	1.24E-03
SKIN	G	2.48E-04	2.63E-04	4.08E-04	4.08E-04	3.43E-04	4.36E-04	8.53E-04	2.77E-04	6.79E-04	4.13E-04	4.16E-04
	B	0.0	0.0	0.0	0.0	0.0	0.0	1.72E-02	0.0	0.0	0.0	6.38E-04
	T	2.48E-04	2.63E-04	4.08E-04	4.08E-04	3.43E-04	4.36E-04	1.80E-02	2.77E-04	6.79E-04	4.13E-04	1.05E-03
SPLEEN	G	3.56E-04	6.93E-03	2.61E-04	2.61E-04	5.00E-04	5.41E-04	2.88E-04	4.95E-02	6.00E-05	9.44E-05	6.22E-04
	B	0.0	0.0	0.0	0.0	0.0	0.0	0.0	2.48E-01	0.0	0.0	6.38E-04
	T	3.56E-04	6.93E-03	2.61E-04	2.61E-04	5.00E-04	5.41E-04	2.88E-04	2.97E-01	6.00E-05	9.44E-05	1.26E-03
TESTES	G	0.0	7.32E-05	4.60E-04	4.60E-04	2.42E-04	3.77E-04	5.02E-04	6.79E-05	1.38E-01	8.62E-06	7.14E-04
	B	0.0	0.0	0.0	0.0	0.0	0.0	0.0	0.0	1.28E 00	0.0	6.38E-04
	T	0.0	7.32E-05	4.60E-04	4.60E-04	2.42E-04	3.77E-04	5.02E-04	6.79E-05	1.41E 00	8.62E-06	1.35E-03
THYMUS	G	5.02E-05	3.04E-04	4.09E-04	4.09E-04	5.90E-04	4.53E-04	3.82E-04	2.70E-04	1.72E-05	1.86E-03	8.42E-04
	B	0.0	0.0	0.0	0.0	0.0	0.0	0.0	0.0	0.0	0.0	6.38E-04
	T	5.02E-05	3.04E-04	4.09E-04	4.09E-04	5.90E-04	4.53E-04	3.82E-04	2.70E-04	1.72E-05	1.86E-03	1.48E-03
THYROID	G	2.31E-05	1.10E-04	1.95E-04	1.95E-04	3.95E-04	4.31E-04	3.95E-04	9.21E-05	8.61E-06	1.87E-01	7.40E-04
	B	0.0	0.0	0.0	0.0	0.0	0.0	0.0	0.0	0.0	2.23E 00	6.38E-04
	T	2.31E-05	1.10E-04	1.95E-04	1.95E-04	3.95E-04	4.31E-04	3.95E-04	9.21E-05	8.61E-06	2.42E 00	1.38E-03
UTERUS	G	6.88E-03	2.71E-04	2.61E-04	2.61E-04	6.13E-04	4.65E-04	3.24E-04	3.29E-04	0.0	2.23E-05	9.33E-04
	B	0.0	0.0	0.0	0.0	0.0	0.0	0.0	0.0	0.0	0.0	6.38E-04
	T	6.88E-03	2.71E-04	2.61E-04	2.61E-04	6.13E-04	4.65E-04	3.24E-04	3.29E-04	0.0	2.23E-05	1.57E-03
T BODY	G	8.22E-04	7.99E-04	6.09E-04	6.09E-04	6.69E-04	5.45E-04	4.10E-04	7.02E-04	6.17E-04	5.53E-04	6.07E-04
	B	6.38E-04	6.38E-04	6.38E-04	6.38E-04	6.38E-04	6.38E-04	6.38E-04	6.38E-04	6.38E-04	6.38E-04	6.38E-04
	T	1.46E-03	1.44E-03	1.25E-03	1.25E-03	1.31E-03	1.18E-03	1.05E-03	1.34E-03	1.25E-03	1.19E-03	1.24E-03

*"MUSCLE" VALUES MAY BE USED FOR "SEPARABLE FAT" WITH ADJUSTMENT (SEE TEXT)
PRINCIPLE REFERENCE-MARTIN, M. J. AND BLICHERT, P. H., TOFT NUCLEAR DATA TABLES A8, 28 (1970)
DATE DECAY DATA REVIEWED-SEPTEMBER 1971

S, AVERAGE DOSE EQUIVALENT PER UNIT ACCUMULATED ACTIVITY (REM/UCI-DAY), FOR 21-SCANDIUM-47 (TR=3.400E 00 DAYS)

DATE OF TABLE 11-27-74

TARGET ORGANS		SOURCE ORGANS										
		ADRENALS	BLAD CON	S CONT	SI+CONT	ULI CONT	LLI CONT	KIDNEYS	LIVER	LUNG	RESP LYM NODE	MUSCLE*
ADRENALS	G	7.80E-03	3.47E-06	5.43E-05	2.51E-05	1.90E-05	8.07E-06	2.17E-04	9.61E-05	5.36E-05	5.36E-05	2.91E-05
	B	5.93E-01	0.0	0.0	0.0	0.0	0.0	0.0	0.0	0.0	0.0	0.0
	T	6.01E-01	3.47E-06	5.43E-05	2.51E-05	1.90E-05	8.07E-06	2.17E-04	9.61E-05	5.36E-05	5.36E-05	2.91E-05
BLAD WALL	G	2.69E-06	1.39E-03	5.26E-06	5.37E-05	4.55E-05	1.41E-04	6.06E-06	3.24E-06	8.42E-07	8.42E-07	3.62E-05
	B	0.0	2.08E-02	0.0	0.0	0.0	0.0	0.0	0.0	0.0	0.0	0.0
	T	2.69E-06	2.21E-02	5.26E-06	5.37E-05	4.55E-05	1.41E-04	6.06E-06	3.24E-06	8.42E-07	8.42E-07	3.62E-05
GI TRACT S WALL	G	6.03E-05	5.73E-06	1.01E-03	7.59E-05	7.74E-05	3.67E-05	7.28E-05	3.90E-05	3.81E-05	3.81E-05	2.68E-05
	B	0.0	0.0	1.66E-02	0.0	0.0	0.0	0.0	0.0	0.0	0.0	0.0
	T	6.03E-05	5.73E-06	1.76E-02	7.59E-05	7.74E-05	3.67E-05	7.28E-05	3.90E-05	3.81E-05	3.81E-05	2.68E-05
SI+CONT	G	1.73E-05	6.14E-05	5.51E-05	6.10E-04	3.41E-04	1.92E-04	5.97E-05	3.41E-05	3.96E-06	3.96E-06	3.16E-05
	B	0.0	0.0	0.0	1.04E-02	0.0	0.0	0.0	0.0	0.0	0.0	0.0
	T	1.73E-05	6.14E-05	5.51E-05	1.10E-02	3.41E-04	1.92E-04	5.97E-05	3.41E-05	3.96E-06	3.96E-06	3.16E-05
ULI WALL	G	1.92E-05	4.64E-05	7.32E-05	4.68E-04	8.30E-04	8.61E-05	5.95E-05	5.16E-05	4.72E-06	4.72E-06	3.28E-05
	B	0.0	0.0	0.0	0.0	1.89E-02	0.0	0.0	0.0	0.0	0.0	0.0
	T	1.92E-05	4.64E-05	7.32E-05	4.68E-04	1.97E-02	8.61E-05	5.95E-05	5.16E-05	4.72E-06	4.72E-06	3.28E-05
LLI WALL	G	4.56E-06	1.51E-04	2.54E-05	1.47E-04	6.44E-05	9.73E-04	1.57E-05	4.80E-06	1.74E-06	1.74E-06	3.46E-05
	B	0.0	0.0	0.0	0.0	0.0	3.07E-02	0.0	0.0	0.0	0.0	0.0
	T	4.56E-06	1.51E-04	2.54E-05	1.47E-04	6.44E-05	3.17E-02	1.57E-05	4.80E-06	1.74E-06	1.74E-06	3.46E-05
KIDNEYS	G	2.32E-04	5.57E-06	7.25E-05	6.52E-05	5.83E-05	1.85E-05	1.32E-03	8.08E-05	1.77E-05	1.77E-05	2.79E-05
	B	0.0	0.0	0.0	0.0	0.0	0.0	2.68E-02	0.0	0.0	0.0	0.0
	T	2.32E-04	5.57E-06	7.25E-05	6.52E-05	5.83E-05	1.85E-05	2.81E-02	8.08E-05	1.77E-05	1.77E-05	2.79E-05
LIVER	G	1.02E-04	3.80E-06	4.13E-05	3.81E-05	5.34E-05	5.39E-06	7.96E-05	4.98E-04	5.06E-05	5.06E-05	2.19E-05
	B	0.0	0.0	0.0	0.0	0.0	0.0	0.0	4.61E-03	0.0	0.0	0.0
	T	1.02E-04	3.80E-06	4.13E-05	3.81E-05	5.34E-05	5.39E-06	7.96E-05	5.11E-03	5.06E-05	5.06E-05	2.19E-05
LUNGS	G	5.09E-05	5.09E-07	3.54E-05	4.77E-06	5.50E-06	1.69E-06	1.75E-05	5.16E-05	2.79E-04	2.79E-04	2.62E-05
	B	0.0	0.0	0.0	0.0	0.0	0.0	0.0	0.0	8.30E-03	8.30E-03	0.0
	T	5.09E-05	5.09E-07	3.54E-05	4.77E-06	5.50E-06	1.69E-06	1.75E-05	5.16E-05	8.58E-03	8.58E-03	2.62E-05
RESP LYM NODE	G	5.09E-05	5.09E-07	3.54E-05	4.77E-06	5.50E-06	1.69E-06	1.75E-05	5.16E-05	2.79E-04	2.79E-04	2.62E-05
	B	0.0	0.0	0.0	0.0	0.0	0.0	0.0	0.0	8.30E-03	5.53E-01	0.0
	T	5.09E-05	5.09E-07	3.54E-05	4.77E-06	5.50E-06	1.69E-06	1.75E-05	5.16E-05	8.58E-03	5.54E-01	2.62E-05
MUSCLE*	G	2.91E-05	3.62E-05	2.85E-05	3.16E-05	3.02E-05	3.46E-05	2.79E-05	2.19E-05	2.62E-05	2.62E-05	2.81E-05
	B	0.0	0.0	0.0	0.0	0.0	0.0	0.0	0.0	0.0	0.0	2.96E-04
	T	2.91E-05	3.62E-05	2.85E-05	3.16E-05	3.02E-05	3.46E-05	2.79E-05	2.19E-05	2.62E-05	2.62E-05	3.25E-04
OVARIES	G	1.26E-05	1.54E-04	9.88E-06	2.19E-04	2.38E-04	3.77E-04	2.40E-05	9.61E-06	2.14E-06	2.14E-06	4.03E-05
	B	0.0	0.0	0.0	0.0	0.0	0.0	0.0	0.0	0.0	0.0	0.0
	T	1.26E-05	1.54E-04	9.88E-06	2.19E-04	2.38E-04	3.77E-04	2.40E-05	9.61E-06	2.14E-06	2.14E-06	4.03E-05

21-SCANDIUM-47 CONTINUED

TARGET ORGANS		SOURCE ORGANS										
		ADRENALS	BLAD CON	S CONT	SI+CONT	ULI CONT	LLI CONT	KIDNEYS	LIVER	LUNG	RESP LYM NODE	MUSCLE*
PANCREAS	G	1.84E-04	5.29E-06	3.71E-04	4.25E-05	4.92E-05	1.51E-05	1.35E-04	8.47E-05	5.30E-05	5.30E-05	3.64E-05
	B	0.0	0.0	0.0	0.0	0.0	0.0	0.0	0.0	0.0	0.0	0.0
	T	1.84E-04	5.29E-06	3.71E-04	4.25E-05	4.92E-05	1.51E-05	1.35E-04	8.47E-05	5.30E-05	5.30E-05	3.64E-05
SKELETON BONE	G	3.84E-05	1.81E-05	1.76E-05	2.44E-05	2.20E-05	3.12E-05	2.79E-05	2.16E-05	2.83E-05	2.83E-05	2.06E-05
	B	0.0	0.0	0.0	0.0	0.0	0.0	0.0	0.0	0.0	0.0	0.0
	T	3.84E-05	1.81E-05	1.76E-05	2.44E-05	2.20E-05	3.12E-05	2.79E-05	2.16E-05	2.83E-05	2.83E-05	2.06E-05
R MARROW	G	6.99E-05	4.27E-05	3.14E-05	8.16E-05	7.04E-05	9.64E-05	7.30E-05	3.14E-05	3.61E-05	3.61E-05	3.83E-05
	B	0.0	0.0	0.0	0.0	0.0	0.0	0.0	0.0	0.0	0.0	0.0
	T	6.99E-05	4.27E-05	3.14E-05	8.16E-05	7.04E-05	9.64E-05	7.30E-05	3.14E-05	3.61E-05	3.61E-05	3.83E-05
Y MARROW	G	3.68E-05	1.70E-05	2.46E-05	3.41E-05	3.15E-05	3.85E-05	3.42E-05	3.20E-05	2.92E-05	2.92E-05	2.88E-05
	B	0.0	0.0	0.0	0.0	0.0	0.0	0.0	0.0	0.0	0.0	0.0
	T	3.68E-05	1.70E-05	2.46E-05	3.41E-05	3.15E-05	3.85E-05	3.42E-05	3.20E-05	2.92E-05	2.92E-05	2.88E-05
T E CL	G	3.84E-05	1.81E-05	1.76E-05	2.44E-05	2.20E-05	3.12E-05	2.79E-05	2.16E-05	2.83E-05	2.83E-05	2.06E-05
	B	0.0	0.0	0.0	0.0	0.0	0.0	0.0	0.0	0.0	0.0	0.0
	T	3.84E-05	1.81E-05	1.76E-05	2.44E-05	2.20E-05	3.12E-05	2.79E-05	2.16E-05	2.83E-05	2.83E-05	2.06E-05
SKIN	G	1.10E-05	1.14E-05	9.27E-06	8.83E-06	8.82E-06	1.03E-05	1.12E-05	1.03E-05	1.13E-05	1.13E-05	1.49E-05
	B	0.0	0.0	0.0	0.0	0.0	0.0	0.0	0.0	0.0	0.0	0.0
	T	1.10E-05	1.14E-05	9.27E-06	8.83E-06	8.82E-06	1.03E-05	1.12E-05	1.03E-05	1.13E-05	1.13E-05	1.49E-05
SPLEEN	G	1.33E-04	1.05E-05	2.07E-04	3.18E-05	2.97E-05	1.64E-05	1.77E-04	1.91E-05	4.75E-05	4.75E-05	2.94E-05
	B	0.0	0.0	0.0	0.0	0.0	0.0	0.0	0.0	0.0	0.0	0.0
	T	1.33E-04	1.05E-05	2.07E-04	3.18E-05	2.97E-05	1.64E-05	1.77E-04	1.91E-05	4.75E-05	4.75E-05	2.94E-05
TESTES	G	7.54E-07	9.52E-05	1.15E-06	6.70E-06	5.90E-06	3.81E-05	2.02E-06	1.44E-06	1.96E-07	1.96E-07	2.33E-05
	B	0.0	0.0	0.0	0.0	0.0	0.0	0.0	0.0	0.0	0.0	0.0
	T	7.54E-07	9.52E-05	1.15E-06	6.70E-06	5.90E-06	3.81E-05	2.02E-06	1.44E-06	1.96E-07	1.96E-07	2.33E-05
THYMUS	G	8.24E-06	2.66E-07	5.37E-06	1.85E-06	2.22E-06	6.30E-07	4.11E-06	1.31E-05	8.74E-05	8.74E-05	4.73E-05
	B	0.0	0.0	0.0	0.0	0.0	0.0	0.0	0.0	0.0	0.0	0.0
	T	8.24E-06	2.66E-07	5.37E-06	1.85E-06	2.22E-06	6.30E-07	4.11E-06	1.31E-05	8.74E-05	8.74E-05	4.73E-05
THYROID	G	2.85E-06	5.32E-08	2.02E-06	3.61E-07	3.98E-07	1.34E-07	1.12E-06	3.58E-06	1.85E-05	1.85E-05	2.62E-05
	B	0.0	0.0	0.0	0.0	0.0	0.0	0.0	0.0	0.0	0.0	0.0
	T	2.85E-06	5.32E-08	2.02E-06	3.61E-07	3.98E-07	1.34E-07	1.12E-06	3.58E-06	1.85E-05	1.85E-05	2.62E-05
UTERUS	G	3.05E-05	3.22E-04	1.63E-05	1.96E-04	1.07E-04	1.47E-04	2.04E-05	8.06E-06	1.80E-06	1.80E-06	4.72E-05
	B	0.0	0.0	0.0	0.0	0.0	0.0	0.0	0.0	0.0	0.0	0.0
	T	3.05E-05	3.22E-04	1.63E-05	1.96E-04	1.07E-04	1.47E-04	2.04E-05	8.06E-06	1.80E-06	1.80E-06	4.72E-05
T BODY	G	3.40E-05	3.82E-05	3.60E-05	4.08E-05	3.96E-05	3.96E-05	3.41E-05	3.44E-05	2.97E-05	2.97E-05	2.69E-05
	B	1.19E-04	1.33E-05	3.56E-05	9.49E-05	5.66E-05	7.03E-05	1.19E-04	1.19E-04	1.19E-04	1.19E-04	1.19E-04
	T	1.53E-04	5.15E-05	7.16E-05	1.36E-04	9.62E-05	1.10E-04	1.53E-04	1.53E-04	1.48E-04	1.48E-04	1.45E-04

CONTINUED NEXT PAGE

21-SCANDIUM-47 CONTINUED

TARGET ORGANS		SOURCE ORGANS										
		OVARIES	PANCREAS	COR BONE	CAN BONE	R MARROW	Y MARROW	SKIN	SPLEEN	TESTES	THYROID	T BODY
ADRENALS	G	7.07E-06	1.84E-04	2.34E-05	2.34E-05	5.01E-05	2.61E-05	1.51E-05	1.31E-04	7.54E-07	2.85E-06	3.60E-05
	B	0.0	0.0	0.0	0.0	0.0	0.0	0.0	0.0	0.0	0.0	1.19E-04
	T	7.07E-06	1.84E-04	2.34E-05	2.34E-05	5.01E-05	2.61E-05	1.51E-05	1.31E-04	7.54E-07	2.85E-06	1.55E-04
BLAD WALL	G	1.47E-04	3.03E-06	1.04E-05	1.04E-05	1.91E-05	8.13E-06	1.03E-05	2.78E-06	9.91E-05	5.38E-08	3.48E-05
	B	0.0	0.0	0.0	0.0	0.0	0.0	0.0	0.0	0.0	0.0	1.19E-04
	T	1.47E-04	3.03E-06	1.04E-05	1.04E-05	1.91E-05	8.13E-06	1.03E-05	2.78E-06	9.91E-05	5.38E-08	1.53E-04
GI TRACT S WALL	G	1.66E-05	3.68E-04	1.16E-05	1.16E-05	2.07E-05	1.61E-05	1.12E-05	2.03E-04	7.59E-07	9.08E-07	3.53E-05
	B	0.0	0.0	0.0	0.0	0.0	0.0	0.0	0.0	0.0	0.0	1.19E-04
	T	1.66E-05	3.68E-04	1.16E-05	1.16E-05	2.07E-05	1.61E-05	1.12E-05	2.03E-04	7.59E-07	9.08E-07	1.54E-04
SI+CONT	G	2.47E-04	3.81E-05	1.54E-05	1.54E-05	5.36E-05	2.20E-05	9.53E-06	2.94E-05	7.79E-06	2.36E-07	4.02E-05
	B	0.0	0.0	0.0	0.0	0.0	0.0	0.0	0.0	0.0	0.0	1.19E-04
	T	2.47E-04	3.81E-05	1.54E-05	1.54E-05	5.36E-05	2.20E-05	9.53E-06	2.94E-05	7.79E-06	2.36E-07	1.59E-04
ULI WALL	G	2.26E-04	4.50E-05	1.46E-05	1.46E-05	4.34E-05	1.93E-05	9.61E-06	2.84E-05	6.80E-06	2.31E-07	3.75E-05
	B	0.0	0.0	0.0	0.0	0.0	0.0	0.0	0.0	0.0	0.0	1.19E-04
	T	2.26E-04	4.50E-05	1.46E-05	1.46E-05	4.34E-05	1.93E-05	9.61E-06	2.84E-05	6.80E-06	2.31E-07	1.56E-04
LLI WALL	G	2.94E-04	1.18E-05	2.16E-05	2.16E-05	5.98E-05	1.88E-05	1.00E-05	1.28E-05	5.66E-05	1.08E-07	3.47E-05
	B	0.0	0.0	0.0	0.0	0.0	0.0	0.0	0.0	0.0	0.0	1.19E-04
	T	2.94E-04	1.18E-05	2.16E-05	2.16E-05	5.98E-05	1.88E-05	1.00E-05	1.28E-05	5.66E-05	1.08E-07	1.53E-04
KIDNEYS	G	1.94E-05	1.35E-04	1.77E-05	1.77E-05	4.57E-05	2.23E-05	1.23E-05	1.85E-04	9.38E-07	7.34E-07	3.37E-05
	B	0.0	0.0	0.0	0.0	0.0	0.0	0.0	0.0	0.0	0.0	1.19E-04
	T	1.94E-05	1.35E-04	1.77E-05	1.77E-05	4.57E-05	2.23E-05	1.23E-05	1.85E-04	9.38E-07	7.34E-07	1.52E-04
LIVER	G	1.15E-05	9.12E-05	1.36E-05	1.36E-05	1.95E-05	2.04E-05	1.12E-05	2.07E-05	7.07E-07	2.10E-06	3.32E-05
	B	0.0	0.0	0.0	0.0	0.0	0.0	0.0	0.0	0.0	0.0	1.19E-04
	T	1.15E-05	9.12E-05	1.36E-05	1.36E-05	1.95E-05	2.04E-05	1.12E-05	2.07E-05	7.07E-07	2.10E-06	1.52E-04
LUNGS	G	1.31E-06	5.25E-05	1.98E-05	1.98E-05	2.44E-05	1.99E-05	1.24E-05	4.64E-05	1.72E-07	1.95E-05	2.86E-05
	B	0.0	0.0	0.0	0.0	0.0	0.0	0.0	0.0	0.0	0.0	1.19E-04
	T	1.31E-06	5.25E-05	1.98E-05	1.98E-05	2.44E-05	1.99E-05	1.24E-05	4.64E-05	1.72E-07	1.95E-05	1.47E-04
RESP LYM NODE	G	1.31E-06	5.25E-05	1.98E-05	1.98E-05	2.44E-05	1.99E-05	1.24E-05	4.64E-05	1.72E-07	1.95E-05	2.86E-05
	B	0.0	0.0	0.0	0.0	0.0	0.0	0.0	0.0	0.0	0.0	1.19E-04
	T	1.31E-06	5.25E-05	1.98E-05	1.98E-05	2.44E-05	1.99E-05	1.24E-05	4.64E-05	1.72E-07	1.95E-05	1.47E-04
MUSCLE*	G	4.03E-05	3.64E-05	2.06E-05	2.06E-05	2.49E-05	1.83E-05	1.49E-05	2.94E-05	2.33E-05	2.62E-05	2.69E-05
	B	0.0	0.0	0.0	0.0	0.0	0.0	0.0	0.0	0.0	0.0	1.19E-04
	T	4.03E-05	3.64E-05	2.06E-05	2.06E-05	2.49E-05	1.83E-05	1.49E-05	2.94E-05	2.33E-05	2.62E-05	1.45E-04
OVARIES	G	1.32E-02	7.86E-06	1.45E-05	1.45E-05	5.98E-05	3.13E-05	8.60E-06	9.33E-06	2.11E-48	1.24E-07	3.74E-05
	B	7.55E-01	0.0	0.0	0.0	0.0	0.0	0.0	0.0	0.0	0.0	1.19E-04
	T	7.68E-01	7.86E-06	1.45E-05	1.45E-05	5.98E-05	3.13E-05	8.60E-06	9.33E-06	2.11E-48	1.24E-07	1.56E-04

21-SCANDIUM-47 CONTINUED

SOURCE ORGANS

TARGET ORGANS		OVARIES	PANCREAS	COR BONE	CAN BONE	R MARROW	Y MARROW	SKIN	SPLEEN	TESTES	THYROID	T BODY
PANCREAS	G	1.03E-05	3.75E-03	1.92E-05	1.92E-05	3.45E-05	2.48E-05	9.97E-06	3.83E-04	1.28E-06	1.75E-06	4.03E-05
	B	0.0	8.30E-02	0.0	0.0	0.0	0.0	0.0	0.0	0.0	0.0	1.19E-04
	T	1.03E-05	8.67E-02	1.92E-05	1.92E-05	3.45E-05	2.48E-05	9.97E-06	3.83E-04	1.28E-06	1.75E-06	1.59E-04
SKELETON BONE	G	2.95E-05	2.81E-05	8.35E-05	8.35E-05	5.56E-05	6.04E-05	1.94E-05	2.22E-05	1.81E-05	1.99E-05	3.81E-05
	B	0.0	0.0	1.66E-03	1.16E-03	3.33E-04	0.0	0.0	0.0	0.0	0.0	1.19E-04
	T	2.95E-05	2.81E-05	1.74E-03	1.24E-03	3.88E-04	6.04E-05	1.94E-05	2.22E-05	1.81E-05	1.99E-05	1.57E-04
R MARROW	G	1.04E-04	5.40E-05	7.52E-05	7.52E-05	1.79E-04	6.29E-05	1.85E-05	3.35E-05	1.45E-05	2.18E-05	4.46E-05
	B	0.0	0.0	2.13E-05	1.66E-03	4.42E-03	0.0	0.0	0.0	0.0	0.0	1.19E-04
	T	1.04E-04	5.40E-05	9.65E-05	1.74E-03	4.60E-03	6.29E-05	1.85E-05	3.35E-05	1.45E-05	2.18E-05	1.63E-04
Y MARROW	G	3.98E-05	3.26E-05	7.11E-05	7.11E-05	6.89E-05	1.02E-04	2.02E-05	3.31E-05	6.76E-06	1.03E-05	3.53E-05
	B	0.0	0.0	0.0	0.0	0.0	5.53E-03	0.0	0.0	0.0	0.0	1.19E-04
	T	3.98E-05	3.26E-05	7.11E-05	7.11E-05	6.89E-05	5.64E-03	2.02E-05	3.31E-05	6.76E-06	1.03E-05	1.54E-04
T E CL	G	2.95E-05	2.81E-05	8.35E-05	8.35E-05	7.52E-05	6.67E-05	1.94E-05	2.22E-05	1.81E-05	1.99E-05	3.81E-05
	B	0.0	0.0	1.01E-03	1.93E-03	1.48E-03	1.38E-03	0.0	0.0	0.0	0.0	1.19E-04
	T	2.95E-05	2.81E-05	1.09E-03	2.02E-03	1.55E-03	1.45E-03	1.94E-05	2.22E-05	1.81E-05	1.99E-05	1.57E-04
SKIN	G	8.79E-06	8.56E-06	1.40E-05	1.40E-05	1.27E-05	1.56E-05	3.21E-05	9.90E-06	2.81E-05	1.54E-05	1.53E-05
	B	0.0	0.0	0.0	0.0	0.0	0.0	3.19E-03	0.0	0.0	0.0	1.19E-04
	T	8.79E-06	8.56E-06	1.40E-05	1.40E-05	1.27E-05	1.56E-05	3.22E-03	9.90E-06	2.81E-05	1.54E-05	1.34E-04
SPLEEN	G	1.06E-05	3.93E-04	1.24E-05	1.24E-05	1.91E-05	2.17E-05	1.14E-05	2.38E-03	3.81E-07	2.29E-06	3.46E-05
	B	0.0	0.0	0.0	0.0	0.0	0.0	0.0	4.61E-02	0.0	0.0	1.19E-04
	T	1.06E-05	3.93E-04	1.24E-05	1.24E-05	1.91E-05	2.17E-05	1.14E-05	4.85E-02	3.81E-07	2.29E-06	1.53E-04
TESTES	G	2.11E-48	1.28E-06	1.32E-05	1.32E-05	8.42E-06	2.26E-05	1.95E-05	1.13E-06	6.28E-03	1.34E-08	2.25E-05
	B	0.0	0.0	0.0	0.0	0.0	0.0	0.0	0.0	2.37E-01	0.0	1.19E-04
	T	2.11E-48	1.28E-06	1.32E-05	1.32E-05	8.42E-06	2.26E-05	1.95E-05	1.13E-06	2.43E-01	1.34E-08	1.41E-04
THYMUS	G	6.24E-07	1.41E-05	1.04E-05	1.04E-05	1.74E-05	1.52E-05	1.32E-05	6.53E-06	6.51E-08	8.74E-05	4.02E-05
	B	0.0	0.0	0.0	0.0	0.0	0.0	0.0	0.0	0.0	0.0	1.19E-04
	T	6.24E-07	1.41E-05	1.04E-05	1.04E-05	1.74E-05	1.52E-05	1.32E-05	6.53E-06	6.51E-08	8.74E-05	1.59E-04
THYROID	G	1.24E-07	2.68E-06	1.72E-05	1.72E-05	1.43E-05	2.55E-05	1.47E-05	1.99E-06	1.34E-08	8.38E-03	2.13E-05
	B	0.0	0.0	0.0	0.0	0.0	0.0	0.0	0.0	0.0	4.15E-01	1.19E-04
	T	1.24E-07	2.68E-06	1.72E-05	1.72E-05	1.43E-05	2.55E-05	1.47E-05	1.99E-06	1.34E-08	4.23E-01	1.40E-04
UTERUS	G	4.29E-04	1.17E-05	1.22E-05	1.22E-05	4.63E-05	1.36E-05	8.22E-06	8.31E-06	2.11E-48	1.15E-07	4.27E-05
	B	0.0	0.0	0.0	0.0	0.0	0.0	0.0	0.0	0.0	0.0	1.19E-04
	T	4.29E-04	1.17E-05	1.22E-05	1.22E-05	4.63E-05	1.36E-05	8.22E-06	8.31E-06	2.11E-48	1.15E-07	1.61E-04
T BODY	G	4.19E-05	4.10E-05	2.95E-05	2.95E-05	3.28E-05	2.54E-05	1.58E-05	3.43E-05	2.73E-05	2.53E-05	2.86E-05
	B	1.19E-04	1.19E-04	1.19E-04	1.19E-04	1.19E-04	1.19E-04	1.19E-04	1.19E-04	1.19E-04	1.19E-04	1.19E-04
	T	1.61E-04	1.60E-04	1.48E-04	1.48E-04	1.51E-04	1.44E-04	1.34E-04	1.53E-04	1.46E-04	1.44E-04	1.47E-04

*"MUSCLE" VALUES MAY BE USED FOR "SEPARABLE FAT" WITH ADJUSTMENT (SEE TEXT)
PRINCIPLE REFERENCE-NUCLEAR DATA B4, 314 (1970)
DATE DECAY DATA REVIEWED-SEPTEMBER 1971

S, AVERAGE DOSE EQUIVALENT PER UNIT ACCUMULATED ACTIVITY (REM/UCI-DAY), FOR 21-SCANDIUM-49 (TR=5.750E 01 MIN)

DATE OF TABLE 11-27-74

TARGET ORGANS		SOURCE ORGANS										
		ADRENALS	BLAD CON	S CONT	SI+CONT	ULI CONT	LLI CONT	KIDNEYS	LIVER	LUNG	RESP LYM NODE	MUSCLE*
ADRENALS	G	3.65E-05	2.28E-08	2.57E-07	1.11E-07	8.88E-08	4.18E-08	9.12E-07	3.98E-07	1.21E-07	1.21E-07	1.24E-07
	B	3.02E 00	0.0	0.0	0.0	0.0	0.0	0.0	0.0	0.0	0.0	0.0
	T	3.02E 00	2.28E-08	2.57E-07	1.11E-07	8.88E-08	4.18E-08	9.12E-07	3.98E-07	1.21E-07	1.21E-07	1.24E-07
BLAD WALL	G	2.42E-08	5.50E-06	3.35E-08	2.51E-07	1.69E-07	4.98E-07	3.50E-08	2.40E-08	9.23E-09	9.23E-09	1.43E-07
	B	0.0	1.06E-01	0.0	0.0	0.0	0.0	0.0	0.0	0.0	0.0	0.0
	T	2.42E-08	1.06E-01	3.35E-08	2.51E-07	1.69E-07	4.98E-07	3.50E-08	2.40E-08	9.23E-09	9.23E-09	1.43E-07
GI TRACT S WALL	G	2.03E-07	4.37E-08	3.93E-06	2.81E-07	2.68E-07	1.41E-07	2.55E-07	1.66E-07	1.73E-07	1.73E-07	1.15E-07
	B	0.0	0.0	8.44E-02	0.0	0.0	0.0	0.0	0.0	0.0	0.0	0.0
	T	2.03E-07	4.37E-08	8.44E-02	2.81E-07	2.68E-07	1.41E-07	2.55E-07	1.66E-07	1.73E-07	1.73E-07	1.15E-07
SI+CONT	G	8.95E-08	2.27E-07	2.06E-07	2.35E-06	1.19E-06	7.01E-07	2.30E-07	1.32E-07	3.03E-08	3.03E-08	1.25E-07
	B	0.0	0.0	0.0	5.28E-02	0.0	0.0	0.0	0.0	0.0	0.0	0.0
	T	8.95E-08	2.27E-07	2.06E-07	5.28E-02	1.19E-06	7.01E-07	2.30E-07	1.32E-07	3.03E-08	3.03E-08	1.25E-07
ULI WALL	G	8.85E-08	1.63E-07	2.69E-07	1.77E-06	3.30E-06	3.28E-07	2.22E-07	1.85E-07	3.83E-08	3.83E-08	1.32E-07
	B	0.0	0.0	0.0	0.0	9.59E-02	0.0	0.0	0.0	0.0	0.0	0.0
	T	8.85E-08	1.63E-07	2.69E-07	1.77E-06	9.59E-02	3.28E-07	2.22E-07	1.85E-07	3.83E-08	3.83E-08	1.32E-07
LLI WALL	G	3.71E-08	5.70E-07	1.15E-07	5.57E-07	2.28E-07	3.95E-06	8.55E-08	2.95E-08	6.14E-09	6.14E-09	1.37E-07
	B	0.0	0.0	0.0	0.0	0.0	1.56E-01	0.0	0.0	0.0	0.0	0.0
	T	3.71E-08	5.70E-07	1.15E-07	5.57E-07	2.28E-07	1.56E-01	8.55E-08	2.95E-08	6.14E-09	6.14E-09	1.37E-07
KIDNEYS	G	8.49E-07	3.96E-08	2.55E-07	2.36E-07	2.15E-07	9.00E-08	5.53E-06	3.05E-07	7.87E-08	7.87E-08	1.18E-07
	B	0.0	0.0	0.0	0.0	0.0	0.0	1.36E-01	0.0	0.0	0.0	0.0
	T	8.49E-07	3.96E-08	2.55E-07	2.36E-07	2.15E-07	9.00E-08	1.36E-01	3.05E-07	7.87E-08	7.87E-08	1.18E-07
LIVER	G	3.83E-07	2.98E-08	1.69E-07	1.52E-07	2.03E-07	3.71E-08	3.07E-07	1.95E-06	1.86E-07	1.86E-07	9.19E-08
	B	0.0	0.0	0.0	0.0	0.0	0.0	0.0	2.35E-02	0.0	0.0	0.0
	T	3.83E-07	2.98E-08	1.69E-07	1.52E-07	2.03E-07	3.71E-08	3.07E-07	2.35E-02	1.86E-07	1.86E-07	9.19E-08
LUNGS	G	1.93E-07	8.76E-09	1.41E-07	3.07E-08	3.68E-08	1.85E-08	7.85E-08	1.99E-07	1.12E-06	1.12E-06	1.07E-07
	B	0.0	0.0	0.0	0.0	0.0	0.0	0.0	0.0	4.22E-02	4.22E-02	0.0
	T	1.93E-07	8.76E-09	1.41E-07	3.07E-08	3.68E-08	1.85E-08	7.85E-08	1.99E-07	4.22E-02	4.22E-02	1.07E-07
RESP LYM NODE	G	1.93E-07	8.76E-09	1.41E-07	3.07E-08	3.68E-08	1.85E-08	7.85E-08	1.99E-07	1.12E-06	1.12E-06	1.07E-07
	B	0.0	0.0	0.0	0.0	0.0	0.0	0.0	0.0	4.22E-02	2.81E 00	0.0
	T	1.93E-07	8.76E-09	1.41E-07	3.07E-08	3.68E-08	1.85E-08	7.85E-08	1.99E-07	4.22E-02	2.81E 00	1.07E-07
MUSCLE*	G	1.24E-07	1.43E-07	1.15E-07	1.25E-07	1.21E-07	1.37E-07	1.18E-07	9.19E-08	1.07E-07	1.07E-07	1.23E-07
	B	0.0	0.0	0.0	0.0	0.0	0.0	0.0	0.0	0.0	0.0	1.51E-03
	T	1.24E-07	1.43E-07	1.15E-07	1.25E-07	1.21E-07	1.37E-07	1.18E-07	9.19E-08	1.07E-07	1.07E-07	1.51E-03
OVARIES	G	2.87E-08	5.32E-07	8.01E-08	6.04E-07	7.34E-07	1.31E-06	1.01E-07	7.53E-08	1.61E-08	1.61E-08	1.59E-07
	B	0.0	0.0	0.0	0.0	0.0	0.0	0.0	0.0	0.0	0.0	0.0
	T	2.87E-08	5.32E-07	8.01E-08	6.04E-07	7.34E-07	1.31E-06	1.01E-07	7.53E-08	1.61E-08	1.61E-08	1.59E-07

21-SCANDIUM-49 CONTINUED

TARGET ORGANS		SOURCE ORGANS										
		ADRENALS	BLAD CON	S CONT	SI+CONT	ULI CONT	LLI CONT	KIDNEYS	LIVER	LUNG	RESP LYM NODE	MUSCLE*
PANCREAS	G	6.76E-07	3.10E-08	1.28E-06	1.49E-07	1.83E-07	6.19E-08	4.65E-07	2.98E-07	1.80E-07	1.80E-07	1.44E-07
	B	0.0	0.0	0.0	0.0	0.0	0.0	0.0	0.0	0.0	0.0	0.0
	T	6.76E-07	3.10E-08	1.28E-06	1.49E-07	1.83E-07	6.19E-08	4.65E-07	2.98E-07	1.80E-07	1.80E-07	1.44E-07
SKELETON BONE	G	1.07E-07	4.69E-08	4.80E-08	6.28E-08	5.68E-08	8.18E-08	7.81E-08	6.08E-08	7.93E-08	7.93E-08	9.35E-08
	B	0.0	0.0	0.0	0.0	0.0	0.0	0.0	0.0	0.0	0.0	0.0
	T	1.07E-07	4.69E-08	4.80E-08	6.28E-08	5.68E-08	8.18E-08	7.81E-08	6.08E-08	7.93E-08	7.93E-08	9.35E-08
R MARROW	G	1.88E-07	9.32E-08	7.74E-08	1.88E-07	1.62E-07	2.35E-07	1.93E-07	8.77E-08	1.01E-07	1.01E-07	1.07E-07
	B	0.0	0.0	0.0	0.0	0.0	0.0	0.0	0.0	0.0	0.0	0.0
	T	1.88E-07	9.32E-08	7.74E-08	1.88E-07	1.62E-07	2.35E-07	1.93E-07	8.77E-08	1.01E-07	1.01E-07	1.07E-07
Y MARROW	G	1.06E-07	4.42E-08	6.79E-08	8.51E-08	7.92E-08	1.01E-07	9.54E-08	8.95E-08	8.22E-08	8.22E-08	8.60E-08
	B	0.0	0.0	0.0	0.0	0.0	0.0	0.0	0.0	0.0	0.0	0.0
	T	1.06E-07	4.42E-08	6.79E-08	8.51E-08	7.92E-08	1.01E-07	9.54E-08	8.95E-08	8.22E-08	8.22E-08	8.60E-08
T E CL	G	1.07E-07	4.69E-08	4.80E-08	6.28E-08	5.68E-08	8.18E-08	7.81E-08	6.08E-08	7.93E-08	7.93E-08	9.35E-08
	B	0.0	0.0	0.0	0.0	0.0	0.0	0.0	0.0	0.0	0.0	0.0
	T	1.07E-07	4.69E-08	4.80E-08	6.28E-08	5.68E-08	8.18E-08	7.81E-08	6.08E-08	7.93E-08	7.93E-08	9.35E-08
SKIN	G	6.13E-08	5.91E-08	5.56E-08	5.05E-08	5.02E-08	5.78E-08	5.85E-08	5.64E-08	6.00E-08	6.00E-08	7.85E-08
	B	0.0	0.0	0.0	0.0	0.0	0.0	0.0	0.0	0.0	0.0	0.0
	T	6.13E-08	5.91E-08	5.56E-08	5.05E-08	5.02E-08	5.78E-08	5.85E-08	5.64E-08	6.00E-08	6.00E-08	7.85E-08
SPLEEN	G	4.62E-07	2.48E-08	7.18E-07	1.40E-07	1.13E-07	8.57E-08	6.27E-07	8.36E-08	1.59E-07	1.59E-07	1.19E-07
	B	0.0	0.0	0.0	0.0	0.0	0.0	0.0	0.0	0.0	0.0	0.0
	T	4.62E-07	2.48E-08	7.18E-07	1.40E-07	1.13E-07	8.57E-08	6.27E-07	8.36E-08	1.59E-07	1.59E-07	1.19E-07
TESTES	G	9.19E-09	3.69E-07	1.62E-08	5.56E-08	4.22E-08	1.51E-07	1.63E-08	1.30E-08	4.13E-09	4.13E-09	1.18E-07
	B	0.0	0.0	0.0	0.0	0.0	0.0	0.0	0.0	0.0	0.0	0.0
	T	9.19E-09	3.69E-07	1.62E-08	5.56E-08	4.22E-08	1.51E-07	1.63E-08	1.30E-08	4.13E-09	4.13E-09	1.18E-07
THYMUS	G	5.79E-08	5.10E-09	5.25E-08	1.53E-08	1.63E-08	7.71E-09	2.07E-08	6.66E-08	3.42E-07	3.42E-07	1.73E-07
	B	0.0	0.0	0.0	0.0	0.0	0.0	0.0	0.0	0.0	0.0	0.0
	T	5.79E-08	5.10E-09	5.25E-08	1.53E-08	1.63E-08	7.71E-09	2.07E-08	6.66E-08	3.42E-07	3.42E-07	1.73E-07
THYROID	G	2.14E-08	2.19E-09	1.64E-08	5.98E-09	6.28E-09	3.31E-09	1.14E-08	1.88E-08	7.89E-08	7.89E-08	1.11E-07
	B	0.0	0.0	0.0	0.0	0.0	0.0	0.0	0.0	0.0	0.0	0.0
	T	2.14E-08	2.19E-09	1.64E-08	5.98E-09	6.28E-09	3.31E-09	1.14E-08	1.88E-08	7.89E-08	7.89E-08	1.11E-07
UTERUS	G	3.07E-08	1.10E-06	7.83E-08	6.29E-07	4.07E-07	4.46E-07	7.37E-08	5.26E-08	1.96E-08	1.96E-08	1.71E-07
	B	0.0	0.0	0.0	0.0	0.0	0.0	0.0	0.0	0.0	0.0	0.0
	T	3.07E-08	1.10E-06	7.83E-08	6.29E-07	4.07E-07	4.46E-07	7.37E-08	5.26E-08	1.96E-08	1.96E-08	1.71E-07
T BODY	G	1.36E-07	1.50E-07	1.42E-07	1.55E-07	1.53E-07	1.52E-07	1.37E-07	1.36E-07	1.15E-07	1.15E-07	1.17E-07
	B	6.03E-04	6.78E-05	1.81E-04	4.82E-04	2.88E-04	3.57E-04	6.03E-04	6.03E-04	6.03E-04	6.03E-04	6.03E-04
	T	6.03E-04	6.80E-05	1.81E-04	4.83E-04	2.88E-04	3.58E-04	6.03E-04	6.03E-04	6.03E-04	6.03E-04	6.03E-04

CONTINUED NEXT PAGE

21-SCANDIUM-49 CONTINUED

TARGET ORGANS		SOURCE ORGANS										
		OVARIES	PANCREAS	COR BONE	CAN BONE	R MARROW	Y MARROW	SKIN	SPLEEN	TESTES	THYROID	T BODY
ADRENALS	G	4.64E-08	5.75E-07	1.34E-07	1.34E-07	1.42E-07	9.91E-08	7.63E-08	5.14E-07	9.19E-09	2.02E-08	2.00E-07
	B	0.0	0.0	0.0	0.0	0.0	0.0	0.0	0.0	0.0	0.0	6.03E-04
	T	4.64E-08	5.75E-07	1.34E-07	1.34E-07	1.42E-07	9.91E-08	7.63E-08	5.14E-07	9.19E-09	2.02E-08	6.03E-04
BLAD WALL	G	5.08E-07	3.54E-08	5.93E-08	5.93E-08	7.50E-08	3.68E-08	6.72E-08	2.55E-08	3.74E-07	2.19E-09	1.40E-07
	B	0.0	0.0	0.0	0.0	0.0	0.0	0.0	0.0	0.0	0.0	6.03E-04
	T	5.08E-07	3.54E-08	5.93E-08	5.93E-08	7.50E-08	3.68E-08	6.72E-08	2.55E-08	3.74E-07	2.19E-09	6.03E-04
GI TRACT S WALL	G	8.68E-08	1.29E-06	4.92E-08	4.92E-08	8.31E-08	6.28E-08	5.43E-08	7.83E-07	1.22E-08	1.34E-08	1.20E-07
	B	0.0	0.0	0.0	0.0	0.0	0.0	0.0	0.0	0.0	0.0	6.03E-04
	T	8.68E-08	1.29E-06	4.92E-08	4.92E-08	8.31E-08	6.28E-08	5.43E-08	7.83E-07	1.22E-08	1.34E-08	6.03E-04
SI+CONT	G	8.82E-07	1.48E-07	6.44E-08	6.44E-08	2.01E-07	8.50E-08	5.08E-08	1.19E-07	4.99E-08	5.23E-09	1.53E-07
	B	0.0	0.0	0.0	0.0	0.0	0.0	0.0	0.0	0.0	0.0	6.03E-04
	T	8.82E-07	1.48E-07	6.44E-08	6.44E-08	2.01E-07	8.50E-08	5.08E-08	1.19E-07	4.99E-08	5.23E-09	6.03E-04
ULI WALL	G	8.38E-07	1.72E-07	6.36E-08	6.36E-08	1.61E-07	8.15E-08	4.98E-08	1.27E-07	4.91E-08	5.59E-09	1.43E-07
	B	0.0	0.0	0.0	0.0	0.0	0.0	0.0	0.0	0.0	0.0	6.03E-04
	T	8.38E-07	1.72E-07	6.36E-08	6.36E-08	1.61E-07	8.15E-08	4.98E-08	1.27E-07	4.91E-08	5.59E-09	6.03E-04
LLI WALL	G	1.07E-06	5.16E-08	7.80E-08	7.80E-08	2.58E-07	8.44E-08	5.49E-08	5.93E-08	2.08E-07	2.89E-09	1.79E-07
	B	0.0	0.0	0.0	0.0	0.0	0.0	0.0	0.0	0.0	0.0	6.03E-04
	T	1.07E-06	5.16E-08	7.80E-08	7.80E-08	2.58E-07	8.44E-08	5.49E-08	5.93E-08	2.08E-07	2.89E-09	6.03E-04
KIDNEYS	G	9.54E-08	4.68E-07	7.51E-08	7.51E-08	2.17E-07	9.09E-08	6.38E-08	6.62E-07	1.30E-08	1.38E-08	1.31E-07
	B	0.0	0.0	0.0	0.0	0.0	0.0	0.0	0.0	0.0	0.0	6.03E-04
	T	9.54E-08	4.68E-07	7.51E-08	7.51E-08	2.17E-07	9.09E-08	6.38E-08	6.62E-07	1.30E-08	1.38E-08	6.03E-04
LIVER	G	6.09E-08	3.11E-07	6.59E-08	6.59E-08	8.83E-08	9.32E-08	6.04E-08	9.16E-08	1.12E-08	2.22E-08	1.33E-07
	B	0.0	0.0	0.0	0.0	0.0	0.0	0.0	0.0	0.0	0.0	6.03E-04
	T	6.09E-08	3.11E-07	6.59E-08	6.59E-08	8.83E-08	9.32E-08	6.04E-08	9.16E-08	1.12E-08	2.22E-08	6.03E-04
LUNGS	G	1.57E-08	1.81E-07	8.36E-08	8.36E-08	1.01E-07	8.17E-08	6.21E-08	1.72E-07	3.76E-09	8.88E-08	1.08E-07
	B	0.0	0.0	0.0	0.0	0.0	0.0	0.0	0.0	0.0	0.0	6.03E-04
	T	1.57E-08	1.81E-07	8.36E-08	8.36E-08	1.01E-07	8.17E-08	6.21E-08	1.72E-07	3.76E-09	8.88E-08	6.03E-04
RESP LYM NODE	G	1.57E-08	1.81E-07	8.36E-08	8.36E-08	1.01E-07	8.17E-08	6.21E-08	1.72E-07	3.76E-09	8.88E-08	1.08E-07
	B	0.0	0.0	0.0	0.0	0.0	0.0	0.0	0.0	0.0	0.0	6.03E-04
	T	1.57E-08	1.81E-07	8.36E-08	8.36E-08	1.01E-07	8.17E-08	6.21E-08	1.72E-07	3.76E-09	8.88E-08	6.03E-04
MUSCLE*	G	1.59E-07	1.44E-07	9.35E-08	9.35E-08	1.08E-07	8.53E-08	7.85E-08	1.19E-07	1.18E-07	1.11E-07	1.17E-07
	B	0.0	0.0	0.0	0.0	0.0	0.0	0.0	0.0	0.0	0.0	6.03E-04
	T	1.59E-07	1.44E-07	9.35E-08	9.35E-08	1.08E-07	8.53E-08	7.85E-08	1.19E-07	1.18E-07	1.11E-07	6.03E-04
OVARIES	G	5.98E-05	6.29E-08	7.56E-08	7.56E-08	2.75E-07	7.77E-08	5.31E-08	3.13E-08	0.0	3.42E-09	1.73E-07
	B	3.84E 00	0.0	0.0	0.0	0.0	0.0	0.0	0.0	0.0	0.0	6.03E-04
	T	3.84E 00	6.29E-08	7.56E-08	7.56E-08	2.75E-07	7.77E-08	5.31E-08	3.13E-08	0.0	3.42E-09	6.03E-04

21-SCANDIUM-49 CONTINUED

SOURCE ORGANS

TARGET ORGANS		OVARIES	PANCREAS	COR BONE	CAN BONE	R MARROW	Y MARROW	SKIN	SPLEEN	TESTES	THYROID	T BODY
PANCREAS	G	3.62E-08	1.64E-05	9.81E-08	9.81E-08	1.09E-07	8.49E-08	5.00E-08	1.37E-06	1.51E-08	2.88E-08	1.87E-07
	B	0.0	4.22E-01	0.0	0.0	0.0	0.0	0.0	0.0	0.0	0.0	6.03E-04
	T	3.62E-08	4.22E-01	9.81E-08	9.81E-08	1.09E-07	8.49E-08	5.00E-08	1.37E-06	1.51E-08	2.88E-08	6.03E-04
SKELETON BONE	G	7.21E-08	7.33E-08	2.65E-07	2.65E-07	1.80E-07	2.01E-07	7.13E-08	6.17E-08	5.39E-08	6.21E-08	1.17E-07
	B	0.0	0.0	8.44E-03	4.78E-03	2.44E-03	0.0	0.0	0.0	0.0	0.0	6.03E-04
	T	7.21E-08	7.33E-08	8.44E-03	4.78E-03	2.44E-03	2.01E-07	7.13E-08	6.17E-08	5.39E-08	6.21E-08	6.03E-04
R MARROW	G	2.26E-07	1.35E-07	2.38E-07	2.38E-07	5.66E-07	2.02E-07	6.67E-08	8.91E-08	4.28E-08	6.87E-08	1.28E-07
	B	0.0	0.0	6.36E-04	1.22E-02	2.00E-02	0.0	0.0	0.0	0.0	0.0	6.03E-04
	T	2.26E-07	1.35E-07	6.36E-04	1.22E-02	2.00E-02	2.02E-07	6.67E-08	8.91E-08	4.28E-08	6.87E-08	6.03E-04
Y MARROW	G	9.32E-08	8.65E-08	2.28E-07	2.28E-07	2.22E-07	3.42E-07	7.58E-08	9.06E-08	2.67E-08	3.56E-08	1.07E-07
	B	0.0	0.0	0.0	0.0	0.0	2.81E-02	0.0	0.0	0.0	0.0	6.03E-04
	T	9.32E-08	8.65E-08	2.28E-07	2.28E-07	2.22E-07	2.81E-02	7.58E-08	9.06E-08	2.67E-08	3.56E-08	6.03E-04
T E CL	G	7.21E-08	7.33E-08	2.65E-07	2.65E-07	2.41E-07	2.21E-07	7.13E-08	6.17E-08	5.39E-08	6.21E-08	1.17E-07
	B	0.0	0.0	5.27E-03	7.61E-03	9.00E-03	7.04E-03	0.0	0.0	0.0	0.0	6.03E-04
	T	7.21E-08	7.33E-08	5.27E-03	7.61E-03	9.00E-03	7.04E-03	7.13E-08	6.17E-08	5.39E-08	6.21E-08	6.03E-04
SKIN	G	4.50E-08	4.72E-08	7.43E-08	7.43E-08	6.73E-08	8.10E-08	1.69E-07	5.22E-08	1.32E-07	7.78E-08	8.07E-08
	B	0.0	0.0	0.0	0.0	0.0	0.0	1.62E-02	0.0	0.0	0.0	6.03E-04
	T	4.50E-08	4.72E-08	7.43E-08	7.43E-08	6.73E-08	8.10E-08	1.62E-02	5.22E-08	1.32E-07	7.78E-08	6.03E-04
SPLEEN	G	5.81E-08	1.42E-06	5.75E-08	5.75E-08	8.62E-08	1.06E-07	5.04E-08	9.96E-06	1.16E-08	1.43E-08	1.21E-07
	B	0.0	0.0	0.0	0.0	0.0	0.0	0.0	2.35E-01	0.0	0.0	6.03E-04
	T	5.81E-08	1.42E-06	5.75E-08	5.75E-08	8.62E-08	1.06E-07	5.04E-08	2.35E-01	1.16E-08	1.43E-08	6.03E-04
TESTES	G	0.0	1.25E-08	8.78E-08	8.78E-08	3.18E-08	7.25E-08	8.22E-08	1.15E-08	2.75E-05	1.09E-09	1.29E-07
	B	0.0	0.0	0.0	0.0	0.0	0.0	0.0	0.0	1.21E 00	0.0	6.03E-04
	T	0.0	1.25E-08	8.78E-08	8.78E-08	3.18E-08	7.25E-08	8.22E-08	1.15E-08	1.21E 00	1.09E-09	6.03E-04
THYMUS	G	8.22E-09	5.72E-08	5.02E-08	5.02E-08	8.18E-08	6.52E-08	6.48E-08	3.93E-08	2.43E-09	3.82E-07	1.50E-07
	B	0.0	0.0	0.0	0.0	0.0	0.0	0.0	0.0	0.0	0.0	6.03E-04
	T	8.22E-09	5.72E-08	5.02E-08	5.02E-08	8.18E-08	6.52E-08	6.48E-08	3.93E-08	2.43E-09	3.82E-07	6.03E-04
THYROID	G	3.42E-09	1.94E-08	4.87E-08	4.87E-08	6.65E-08	7.27E-08	7.10E-08	1.60E-08	1.09E-09	3.75E-05	1.11E-07
	B	0.0	0.0	0.0	0.0	0.0	0.0	0.0	0.0	0.0	2.11E 00	6.03E-04
	T	3.42E-09	1.94E-08	4.87E-08	4.87E-08	6.65E-08	7.27E-08	7.10E-08	1.60E-08	1.09E-09	2.11E 00	6.03E-04
UTERUS	G	1.31E-06	5.39E-08	4.79E-08	4.79E-08	1.17E-07	6.19E-08	5.20E-08	3.44E-08	0.0	3.29E-09	1.55E-07
	B	0.0	0.0	0.0	0.0	0.0	0.0	0.0	0.0	0.0	0.0	6.03E-04
	T	1.31E-06	5.39E-08	4.79E-08	4.79E-08	1.17E-07	6.19E-08	5.20E-08	3.44E-08	0.0	3.29E-09	6.03E-04
T BODY	G	1.58E-07	1.56E-07	1.17E-07	1.17E-07	1.29E-07	1.04E-07	7.87E-08	1.36E-07	1.18E-07	1.06E-07	1.17E-07
	B	6.03E-04	6.03E-04	6.03E-04	6.03E-04	6.03E-04	6.03E-04	6.03E-04	6.03E-04	6.03E-04	6.03E-04	6.03E-04
	T	6.03E-04	6.03E-04	6.03E-04	6.03E-04	6.03E-04	6.03E-04	6.03E-04	6.03E-04	6.03E-04	6.03E-04	6.03E-04

*"MUSCLE" VALUES MAY BE USED FOR "SEPARABLE FAT" WITH ADJUSTMENT (SEE TEXT)
PRINCIPLE REFERENCE-MARTIN, M. J. AND BLICHERT-TOFT, NUCLEAR DATA TABLES A8, 28 (1970)
DATE DECAY DATA REVIEWED-SEPTEMBER 1971

S, AVERAGE DOSE EQUIVALENT PER UNIT ACCUMULATED ACTIVITY (REM/UCI-DAY), FOR 24-CHROMIUM-51 (TB=2.772E 01 DAYS)

DATE OF TABLE 11-27-74

TARGET ORGANS		SOURCE ORGANS										
		ADRENALS	BLAD CON	S CONT	SI+CONT	ULI CONT	LLI CONT	KIDNEYS	LIVER	LUNG	RESP LYM NODE	MUSCLE*
ADRENALS	G	5.75E-03	1.24E-06	1.34E-05	8.61E-06	5.57E-06	2.81E-06	6.35E-05	2.94E-05	1.44E-05	1.44E-05	8.80E-06
	B	1.44E-02	0.0	0.0	0.0	0.0	0.0	0.0	0.0	0.0	0.0	0.0
	T	2.02E-02	1.24E-06	1.34E-05	8.61E-06	5.57E-06	2.81E-06	6.35E-05	2.94E-05	1.44E-05	1.44E-05	8.80E-06
BLAD WALL	G	6.77E-07	4.41E-04	1.84E-06	1.71E-05	1.20E-05	3.63E-05	2.00E-06	1.36E-06	3.53E-07	3.53E-07	1.04E-05
	B	0.0	5.05E-04	0.0	0.0	0.0	0.0	0.0	0.0	0.0	0.0	0.0
	T	6.77E-07	9.46E-04	1.84E-06	1.71E-05	1.20E-05	3.63E-05	2.00E-06	1.36E-06	3.53E-07	3.53E-07	1.04E-05
GI TRACT S WALL	G	1.72E-05	1.75E-06	3.07E-04	2.09E-05	2.16E-05	1.05E-05	1.97E-05	1.13E-05	1.08E-05	1.08E-05	8.19E-06
	B	0.0	0.0	4.04E-04	0.0	0.0	0.0	0.0	0.0	0.0	0.0	0.0
	T	1.72E-05	1.75E-06	7.11E-04	2.09E-05	2.16E-05	1.05E-05	1.97E-05	1.13E-05	1.08E-05	1.08E-05	8.19E-06
SI+CONT	G	5.25E-06	1.62E-05	1.53E-05	1.99E-04	9.64E-05	5.37E-05	1.65E-05	9.65E-06	1.35E-06	1.35E-06	9.09E-06
	B	0.0	0.0	0.0	2.53E-04	0.0	0.0	0.0	0.0	0.0	0.0	0.0
	T	5.25E-06	1.62E-05	1.53E-05	4.52E-04	9.64E-05	5.37E-05	1.65E-05	9.65E-06	1.35E-06	1.35E-06	9.09E-06
ULI WALL	G	5.69E-06	1.38E-05	2.02E-05	1.47E-04	2.55E-04	2.50E-05	1.69E-05	1.46E-05	1.74E-06	1.74E-06	9.60E-06
	B	0.0	0.0	0.0	0.0	4.59E-04	0.0	0.0	0.0	0.0	0.0	0.0
	T	5.69E-06	1.38E-05	2.02E-05	1.47E-04	7.14E-04	2.50E-05	1.69E-05	1.46E-05	1.74E-06	1.74E-06	9.60E-06
LLI WALL	G	1.64E-06	4.14E-05	7.56E-06	4.14E-05	1.75E-05	3.08E-04	5.07E-06	1.60E-06	5.85E-07	5.85E-07	9.91E-06
	B	0.0	0.0	0.0	0.0	0.0	7.48E-04	0.0	0.0	0.0	0.0	0.0
	T	1.64E-06	4.14E-05	7.56E-06	4.14E-05	1.75E-05	1.06E-03	5.07E-06	1.60E-06	5.85E-07	5.85E-07	9.91E-06
KIDNEYS	G	6.77E-05	1.89E-06	2.02E-05	1.81E-05	1.61E-05	5.36E-06	5.97E-04	2.23E-05	5.55E-06	5.55E-06	8.28E-06
	B	0.0	0.0	0.0	0.0	0.0	0.0	6.52E-04	0.0	0.0	0.0	0.0
	T	6.77E-05	1.89E-06	2.02E-05	1.81E-05	1.61E-05	5.36E-06	1.25E-03	2.23E-05	5.55E-06	5.55E-06	8.28E-06
LIVER	G	2.89E-05	1.42E-06	1.17E-05	1.08E-05	1.49E-05	1.82E-06	2.28E-05	1.78E-04	1.43E-05	1.43E-05	6.40E-06
	B	0.0	0.0	0.0	0.0	0.0	0.0	0.0	1.12E-04	0.0	0.0	0.0
	T	2.89E-05	1.42E-06	1.17E-05	1.08E-05	1.49E-05	1.82E-06	2.28E-05	2.90E-04	1.43E-05	1.43E-05	6.40E-06
LUNGS	G	1.42E-05	2.04E-07	1.02E-05	1.67E-06	1.76E-06	5.47E-07	5.18E-06	1.43E-05	1.34E-04	1.34E-04	7.80E-06
	B	0.0	0.0	0.0	0.0	0.0	0.0	0.0	0.0	2.02E-04	2.02E-04	0.0
	T	1.42E-05	2.04E-07	1.02E-05	1.67E-06	1.76E-06	5.47E-07	5.18E-06	1.43E-05	3.36E-04	3.36E-04	7.80E-06
RESP LYM NODE	G	1.42E-05	2.04E-07	1.02E-05	1.67E-06	1.76E-06	5.47E-07	5.18E-06	1.43E-05	1.06E-04	1.34E-04	7.80E-06
	B	0.0	0.0	0.0	0.0	0.0	0.0	0.0	0.0	2.61E-06	1.35E-02	0.0
	T	1.42E-05	2.04E-07	1.02E-05	1.67E-06	1.76E-06	5.47E-07	5.18E-06	1.43E-05	1.09E-04	1.36E-02	7.80E-06
MUSCLE*	G	8.80E-06	1.04E-05	8.19E-06	9.09E-06	8.63E-06	9.91E-06	8.28E-06	6.40E-06	7.80E-06	7.80E-06	9.59E-06
	B	0.0	0.0	0.0	0.0	0.0	0.0	0.0	0.0	0.0	0.0	7.21E-06
	T	8.80E-06	1.04E-05	8.19E-06	9.09E-06	8.63E-06	9.91E-06	8.28E-06	6.40E-06	7.80E-06	7.80E-06	1.68E-05
OVARIES	G	3.36E-06	4.17E-05	2.66E-06	5.78E-05	7.08E-05	1.09E-04	7.08E-06	2.23E-06	7.93E-07	7.93E-07	1.17E-05
	B	0.0	0.0	0.0	0.0	0.0	0.0	0.0	0.0	0.0	0.0	0.0
	T	3.36E-06	4.17E-05	2.66E-06	5.78E-05	7.08E-05	1.09E-04	7.08E-06	2.23E-06	7.93E-07	7.93E-07	1.17E-05

24-CHROMIUM-51 CONTINUED

TARGET ORGANS		SOURCE ORGANS										
		ADRENALS	BLAD CON	S CONT	SI+CONT	ULI CONT	LLI CONT	KIDNEYS	LIVER	LUNG	RESP LYM NODE	MUSCLE*
PANCREAS	G	4.96E-05	1.70E-06	1.04E-04	1.21E-05	1.28E-05	4.21E-06	3.78E-05	2.46E-05	1.54E-05	1.54E-05	1.05E-05
	B	0.0	0.0	0.0	0.0	0.0	0.0	0.0	0.0	0.0	0.0	0.0
	T	4.96E-05	1.70E-06	1.04E-04	1.21E-05	1.28E-05	4.21E-06	3.78E-05	2.46E-05	1.54E-05	1.54E-05	1.05E-05
SKELETON BONE	G	8.79E-06	4.06E-06	3.98E-06	5.34E-06	4.85E-06	6.89E-06	6.33E-06	4.86E-06	6.38E-06	6.38E-06	6.30E-06
	B	0.0	0.0	0.0	0.0	0.0	0.0	0.0	0.0	0.0	0.0	0.0
	T	8.79E-06	4.06E-06	3.98E-06	5.34E-06	4.85E-06	6.89E-06	6.33E-06	4.86E-06	6.38E-06	6.38E-06	6.30E-06
R MARROW	G	1.60E-05	8.99E-06	7.05E-06	1.73E-05	1.49E-05	2.07E-05	1.63E-05	7.12E-06	8.11E-06	8.11E-06	8.80E-06
	B	0.0	0.0	0.0	0.0	0.0	0.0	0.0	0.0	0.0	0.0	0.0
	T	1.60E-05	8.99E-06	7.05E-06	1.73E-05	1.49E-05	2.07E-05	1.63E-05	7.12E-06	8.11E-06	8.11E-06	8.80E-06
Y MARROW	G	8.48E-06	3.72E-06	5.52E-06	7.44E-06	6.90E-06	8.48E-06	7.82E-06	7.16E-06	6.64E-06	6.64E-06	6.94E-06
	B	0.0	0.0	0.0	0.0	0.0	0.0	0.0	0.0	0.0	0.0	0.0
	T	8.48E-06	3.72E-06	5.52E-06	7.44E-06	6.90E-06	8.48E-06	7.82E-06	7.16E-06	6.64E-06	6.64E-06	6.94E-06
T E CL	G	8.79E-06	4.06E-06	3.98E-06	5.34E-06	4.85E-06	6.89E-06	6.33E-06	4.86E-06	6.38E-06	6.38E-06	6.30E-06
	B	0.0	0.0	0.0	0.0	0.0	0.0	0.0	0.0	0.0	0.0	0.0
	T	8.79E-06	4.06E-06	3.98E-06	5.34E-06	4.85E-06	6.89E-06	6.33E-06	4.86E-06	6.38E-06	6.38E-06	6.30E-06
SKIN	G	3.65E-06	3.50E-06	3.04E-06	2.86E-06	2.91E-06	3.25E-06	3.59E-06	3.27E-06	3.67E-06	3.67E-06	4.95E-06
	B	0.0	0.0	0.0	0.0	0.0	0.0	0.0	0.0	0.0	0.0	0.0
	T	3.65E-06	3.50E-06	3.04E-06	2.86E-06	2.91E-06	3.25E-06	3.59E-06	3.27E-06	3.67E-06	3.67E-06	4.95E-06
SPLEEN	G	3.85E-05	1.05E-06	5.74E-05	9.16E-06	7.82E-06	4.92E-06	5.03E-05	5.64E-06	1.31E-05	1.31E-05	8.56E-06
	B	0.0	0.0	0.0	0.0	0.0	0.0	0.0	0.0	0.0	0.0	0.0
	T	3.85E-05	1.05E-06	5.74E-05	9.16E-06	7.82E-06	4.92E-06	5.03E-05	5.64E-06	1.31E-05	1.31E-05	8.56E-06
TESTES	G	3.30E-07	2.77E-05	2.95E-07	2.11E-06	2.33E-06	1.20E-05	7.69E-07	5.67E-07	1.02E-07	1.02E-07	6.99E-06
	B	0.0	0.0	0.0	0.0	0.0	0.0	0.0	0.0	0.0	0.0	0.0
	T	3.30E-07	2.77E-05	2.95E-07	2.11E-06	2.33E-06	1.20E-05	7.69E-07	5.67E-07	1.02E-07	1.02E-07	6.99E-06
THYMUS	G	3.55E-06	1.35E-07	1.41E-06	7.10E-07	7.85E-07	2.73E-07	1.63E-06	5.36E-06	2.26E-05	2.26E-05	1.46E-05
	B	0.0	0.0	0.0	0.0	0.0	0.0	0.0	0.0	0.0	0.0	0.0
	T	3.55E-06	1.35E-07	1.41E-06	7.10E-07	7.85E-07	2.73E-07	1.63E-06	5.36E-06	2.26E-05	2.26E-05	1.46E-05
THYROID	G	1.04E-06	3.51E-08	7.85E-07	1.75E-07	1.90E-07	7.37E-08	4.60E-07	1.24E-06	5.74E-06	5.74E-06	7.90E-06
	B	0.0	0.0	0.0	0.0	0.0	0.0	0.0	0.0	0.0	0.0	0.0
	T	1.04E-06	3.51E-08	7.85E-07	1.75E-07	1.90E-07	7.37E-08	4.60E-07	1.24E-06	5.74E-06	5.74E-06	7.90E-06
UTERUS	G	9.51E-06	8.93E-05	5.02E-06	5.30E-05	2.71E-05	3.80E-05	5.82E-06	2.42E-06	5.72E-07	5.72E-07	1.32E-05
	B	0.0	0.0	0.0	0.0	0.0	0.0	0.0	0.0	0.0	0.0	0.0
	T	9.51E-06	8.93E-05	5.02E-06	5.30E-05	2.71E-05	3.80E-05	5.82E-06	2.42E-06	5.72E-07	5.72E-07	1.32E-05
T BODY	G	1.05E-05	1.17E-05	1.11E-05	1.23E-05	1.20E-05	1.19E-05	1.06E-05	1.06E-05	9.23E-06	9.23E-06	8.93E-06
	B	2.89E-06	3.25E-07	8.66E-07	2.31E-06	1.38E-06	1.71E-06	2.89E-06	2.89E-06	2.89E-06	2.89E-06	2.89E-06
	T	1.34E-05	1.20E-05	1.19E-05	1.46E-05	1.33E-05	1.36E-05	1.35E-05	1.35E-05	1.21E-05	1.21E-05	1.18E-05

CONTINUED NEXT PAGE

24-CHROMIUM-51 CONTINUED

SOURCE ORGANS

TARGET ORGANS		OVARIES	PANCREAS	COR BONE	CAN BONE	R MARROW	Y MARROW	SKIN	SPLEEN	TESTES	THYROID	T BODY
ADRENALS	G	2.75E-06	4.90E-05	8.39E-06	8.39E-06	1.38E-05	7.72E-06	4.55E-06	3.70E-05	3.30E-07	1.04E-06	1.27E-05
	B	0.0	0.0	0.0	0.0	0.0	0.0	0.0	0.0	0.0	0.0	2.89E-06
	T	2.75E-06	4.90E-05	8.39E-06	8.39E-06	1.38E-05	7.72E-06	4.55E-06	3.70E-05	3.30E-07	1.04E-06	1.56E-05
BLAD WALL	G	3.98E-05	1.02E-06	3.21E-06	3.21E-06	4.29E-06	1.93E-06	3.35E-06	9.28E-07	2.87E-05	3.55E-08	1.10E-05
	B	0.0	0.0	0.0	0.0	0.0	0.0	0.0	0.0	0.0	0.0	2.89E-06
	T	3.98E-05	1.02E-06	3.21E-06	3.21E-06	4.29E-06	1.93E-06	3.35E-06	9.28E-07	2.87E-05	3.55E-08	1.39E-05
GI TRACT S WALL	G	4.76E-06	1.04E-04	3.43E-06	3.43E-06	6.27E-06	4.35E-06	3.47E-06	5.62E-05	4.43E-07	4.41E-07	1.16E-05
	B	0.0	0.0	0.0	0.0	0.0	0.0	0.0	0.0	0.0	0.0	2.89E-06
	T	4.76E-06	1.04E-04	3.43E-06	3.43E-06	6.27E-06	4.35E-06	3.47E-06	5.62E-05	4.43E-07	4.41E-07	1.45E-05
SI+CONT	G	6.91E-05	1.07E-05	4.58E-06	4.58E-06	1.54E-05	6.23E-06	3.00E-06	8.27E-06	2.74E-06	7.45E-08	1.24E-05
	B	0.0	0.0	0.0	0.0	0.0	0.0	0.0	0.0	0.0	0.0	2.89E-06
	T	6.91E-05	1.07E-05	4.58E-06	4.58E-06	1.54E-05	6.23E-06	3.00E-06	8.27E-06	2.74E-06	7.45E-08	1.52E-05
ULI WALL	G	6.56E-05	1.29E-05	4.29E-06	4.29E-06	1.23E-05	5.41E-06	3.00E-06	7.56E-06	2.07E-06	6.45E-08	1.16E-05
	B	0.0	0.0	0.0	0.0	0.0	0.0	0.0	0.0	0.0	0.0	2.89E-06
	T	6.56E-05	1.29E-05	4.29E-06	4.29E-06	1.23E-05	5.41E-06	3.00E-06	7.56E-06	2.07E-06	6.45E-08	1.45E-05
LLI WALL	G	8.35E-05	3.29E-06	6.01E-06	6.01E-06	1.74E-05	5.16E-06	3.17E-06	3.88E-06	1.65E-05	6.07E-08	1.13E-05
	B	0.0	0.0	0.0	0.0	0.0	0.0	0.0	0.0	0.0	0.0	2.89E-06
	T	8.35E-05	3.29E-06	6.01E-06	6.01E-06	1.74E-05	5.16E-06	3.17E-06	3.88E-06	1.65E-05	6.07E-08	1.42E-05
KIDNEYS	G	6.08E-06	3.69E-05	5.38E-06	5.38E-06	1.34E-05	6.72E-06	4.02E-06	5.11E-05	4.39E-07	2.53E-07	1.09E-05
	B	0.0	0.0	0.0	0.0	0.0	0.0	0.0	0.0	0.0	0.0	2.89E-06
	T	6.08E-06	3.69E-05	5.38E-06	5.38E-06	1.34E-05	6.72E-06	4.02E-06	5.11E-05	4.39E-07	2.53E-07	1.38E-05
LIVER	G	3.51E-06	2.50E-05	4.02E-06	4.02E-06	5.86E-06	6.05E-06	3.58E-06	6.13E-06	2.66E-07	7.94E-07	1.06E-05
	B	0.0	0.0	0.0	0.0	0.0	0.0	0.0	0.0	0.0	0.0	2.89E-06
	T	3.51E-06	2.50E-05	4.02E-06	4.02E-06	5.86E-06	6.05E-06	3.58E-06	6.13E-06	2.66E-07	7.94E-07	1.35E-05
LUNGS	G	5.15E-07	1.44E-05	5.76E-06	5.76E-06	7.11E-06	5.78E-06	3.83E-06	1.30E-05	7.68E-08	5.83E-06	9.31E-06
	B	0.0	0.0	0.0	0.0	0.0	0.0	0.0	0.0	0.0	0.0	2.89E-06
	T	5.15E-07	1.44E-05	5.76E-06	5.76E-06	7.11E-06	5.78E-06	3.83E-06	1.30E-05	7.68E-08	5.83E-06	1.22E-05
RESP LYM NODE	G	5.15E-07	1.44E-05	5.76E-06	5.76E-06	7.11E-06	5.78E-06	3.83E-06	1.30E-05	7.68E-08	5.83E-06	9.31E-06
	B	0.0	0.0	0.0	0.0	0.0	0.0	0.0	0.0	0.0	0.0	2.89E-06
	T	5.15E-07	1.44E-05	5.76E-06	5.76E-06	7.11E-06	5.78E-06	3.83E-06	1.30E-05	7.68E-08	5.83E-06	1.22E-05
MUSCLE*	G	1.17E-05	1.05E-05	6.30E-06	6.30E-06	7.49E-06	5.73E-06	4.95E-06	8.56E-06	6.99E-06	7.90E-06	8.93E-06
	B	0.0	0.0	0.0	0.0	0.0	0.0	0.0	0.0	0.0	0.0	2.89E-06
	T	1.17E-05	1.05E-05	6.30E-06	6.30E-06	7.49E-06	5.73E-06	4.95E-06	8.56E-06	6.99E-06	7.90E-06	1.18E-05
OVARIES	G	1.03E-02	1.99E-06	4.96E-06	4.96E-06	1.62E-05	7.00E-06	2.45E-06	4.52E-06	1.04E-45	7.15E-08	1.13E-05
	B	1.84E-02	0.0	0.0	0.0	0.0	0.0	0.0	0.0	0.0	0.0	2.89E-06
	T	2.86E-02	1.99E-06	4.96E-06	4.96E-06	1.62E-05	7.00E-06	2.45E-06	4.52E-06	1.04E-45	7.15E-08	1.42E-05

24-CHROMIUM-51 CONTINUED

SOURCE ORGANS

TARGET ORGANS		OVARIES	PANCREAS	COR BONE	CAN BONE	R MARROW	Y MARROW	SKIN	SPLEEN	TESTES	THYROID	T BODY
PANCREAS	G	3.03E-06	2.05E-03	5.99E-06	5.99E-06	9.73E-06	7.79E-06	3.42E-06	1.11E-04	3.62E-07	5.54E-07	1.24E-05
	B	0.0	2.02E-03	0.0	0.0	0.0	0.0	0.0	0.0	0.0	0.0	2.89E-06
	T	3.03E-06	4.07E-03	5.99E-06	5.99E-06	9.73E-06	7.79E-06	3.42E-06	1.11E-04	3.62E-07	5.54E-07	1.53E-05
SKELETON BONE	G	6.30E-06	6.11E-06	2.61E-05	2.61E-05	1.56E-05	1.74E-05	5.00E-06	5.01E-06	4.26E-06	4.72E-06	9.64E-06
	B	0.0	0.0	4.04E-05	3.99E-05	3.03E-07	0.0	0.0	0.0	0.0	0.0	2.89E-06
	T	6.30E-06	6.11E-06	6.65E-05	6.60E-05	1.59E-05	1.74E-05	5.00E-06	5.01E-06	4.26E-06	4.72E-06	1.25E-05
R MARROW	G	2.14E-05	1.17E-05	2.12E-05	2.12E-05	7.00E-05	1.80E-05	4.71E-06	7.64E-06	3.46E-06	5.19E-06	1.12E-05
	B	0.0	0.0	2.11E-08	1.51E-06	1.34E-04	0.0	0.0	0.0	0.0	0.0	2.89E-06
	T	2.14E-05	1.17E-05	2.12E-05	2.27E-05	2.04E-04	1.80E-05	4.71E-06	7.64E-06	3.46E-06	5.19E-06	1.41E-05
Y MARROW	G	8.41E-06	7.15E-06	2.05E-05	2.05E-05	1.97E-05	4.86E-05	5.23E-06	7.43E-06	1.73E-06	2.48E-06	9.37E-06
	B	0.0	0.0	0.0	0.0	0.0	1.35E-04	0.0	0.0	0.0	0.0	2.89E-06
	T	8.41E-06	7.15E-06	2.05E-05	2.05E-05	1.97E-05	1.83E-04	5.23E-06	7.43E-06	1.73E-06	2.48E-06	1.23E-05
T E CL	G	6.30E-06	6.11E-06	2.34E-05	2.34E-05	3.06E-05	2.85E-05	5.00E-06	5.01E-06	4.26E-06	4.72E-06	1.00E-05
	B	0.0	0.0	1.78E-06	3.60E-06	6.49E-05	3.37E-05	0.0	0.0	0.0	0.0	2.89E-06
	T	6.30E-06	6.11E-06	2.52E-05	2.70E-05	9.55E-05	6.22E-05	5.00E-06	5.01E-06	4.26E-06	4.72E-06	1.29E-05
SKIN	G	2.84E-06	2.73E-06	4.65E-06	4.65E-06	4.16E-06	5.16E-06	2.63E-05	3.26E-06	8.83E-06	4.86E-06	5.59E-06
	B	0.0	0.0	0.0	0.0	0.0	0.0	7.77E-05	0.0	0.0	0.0	2.89E-06
	T	2.84E-06	2.73E-06	4.65E-06	4.65E-06	4.16E-06	5.16E-06	1.04E-04	3.26E-06	8.83E-06	4.86E-06	8.47E-06
SPLEEN	G	3.59E-06	1.11E-04	4.28E-06	4.28E-06	5.16E-06	6.04E-06	3.58E-06	1.04E-03	3.78E-07	7.29E-07	1.12E-05
	B	0.0	0.0	0.0	0.0	0.0	0.0	0.0	1.12E-03	0.0	0.0	2.89E-06
	T	3.59E-06	1.11E-04	4.28E-06	4.28E-06	5.16E-06	6.04E-06	3.58E-06	2.17E-03	3.78E-07	7.29E-07	1.41E-05
TESTES	G	1.04E-45	4.20E-07	3.55E-06	3.55E-06	2.07E-06	6.11E-06	5.75E-06	4.65E-07	3.42E-03	1.13E-08	8.98E-06
	B	0.0	0.0	0.0	0.0	0.0	0.0	0.0	0.0	5.77E-03	0.0	2.89E-06
	T	1.04E-45	4.20E-07	3.55E-06	3.55E-06	2.07E-06	6.11E-06	5.75E-06	4.65E-07	9.19E-03	1.13E-08	1.19E-05
THYMUS	G	2.80E-07	4.29E-06	3.41E-06	3.41E-06	3.73E-06	3.51E-06	4.48E-06	2.44E-06	4.17E-08	2.53E-05	1.28E-05
	B	0.0	0.0	0.0	0.0	0.0	0.0	0.0	0.0	0.0	0.0	2.89E-06
	T	2.80E-07	4.29E-06	3.41E-06	3.41E-06	3.73E-06	3.51E-06	4.48E-06	2.44E-06	4.17E-08	2.53E-05	1.57E-05
THYROID	G	7.16E-08	9.85E-07	5.89E-06	5.89E-06	4.69E-06	5.40E-06	4.69E-06	7.57E-07	1.13E-08	5.27E-03	8.59E-06
	B	0.0	0.0	0.0	0.0	0.0	0.0	0.0	0.0	0.0	1.01E-02	2.89E-06
	T	7.16E-08	9.85E-07	5.89E-06	5.89E-06	4.69E-06	5.40E-06	4.69E-06	7.57E-07	1.13E-08	1.54E-02	1.15E-05
UTERUS	G	1.16E-04	3.77E-06	3.56E-06	3.56E-06	1.27E-05	3.79E-06	2.70E-06	2.49E-06	1.04E-45	6.73E-08	1.23E-05
	B	0.0	0.0	0.0	0.0	0.0	0.0	0.0	0.0	0.0	0.0	2.89E-06
	T	1.16E-04	3.77E-06	3.56E-06	3.56E-06	1.27E-05	3.79E-06	2.70E-06	2.49E-06	1.04E-45	6.73E-08	1.52E-05
T BODY	G	1.25E-05	1.23E-05	9.09E-06	9.09E-06	1.00E-05	8.07E-06	5.63E-06	1.06E-05	8.89E-06	8.22E-06	9.06E-06
	B	2.89E-06	2.89E-06	2.89E-06	2.89E-06	2.89E-06	2.89E-06	2.89E-06	2.89E-06	2.89E-06	2.89E-06	2.89E-06
	T	1.54E-05	1.52E-05	1.20E-05	1.20E-05	1.29E-05	1.10E-05	8.51E-06	1.35E-05	1.18E-05	1.11E-05	1.19E-05

*"MUSCLE" VALUES MAY BE USED FOR "SEPARABLE FAT" WITH ADJUSTMENT (SEE TEXT)
PRINCIPLE REFERENCE-RIBORDY, C. L. AND HUBER, O., HELVETICA PHYSICA ACTA 43, 345 (1970)
DATE DECAY DATA REVIEWED-FEBRUARY 1972

S, AVERAGE DOSE EQUIVALENT PER UNIT ACCUMULATED ACTIVITY (REM/UCI-DAY), FOR 25-MANGANESE-52M (TR=2.130E 01 MIN)

DATE OF TABLE 11-27-74

TARGET ORGANS		SOURCE ORGANS										
		ADRENALS	BLAD CON	S CONT	SI+CONT	ULI CONT	LLI CONT	KIDNEYS	LIVER	LUNG	RESP LYM NODE	MUSCLE*
ADRENALS	G	1.79E-01	1.01E-04	1.16E-03	4.85E-04	4.33E-04	2.00E-04	4.81E-03	1.85E-03	8.71E-04	8.71E-04	6.10E-04
	B	4.13E 00	0.0	0.0	0.0	0.0	0.0	0.0	0.0	0.0	0.0	0.0
	T	4.31E 00	1.01E-04	1.16E-03	4.85E-04	4.33E-04	2.00E-04	4.81E-03	1.85E-03	8.71E-04	8.71E-04	6.10E-04
BLAD WALL	G	8.04E-05	2.81E-02	1.88E-04	1.33E-03	7.03E-04	2.40E-03	1.74E-04	1.19E-04	3.67E-05	3.67E-05	7.05E-04
	B	0.0	1.44E-01	0.0	0.0	0.0	0.0	0.0	0.0	0.0	0.0	0.0
	T	8.04E-05	1.72E-01	1.88E-04	1.33E-03	7.03E-04	2.40E-03	1.74E-04	1.19E-04	3.67E-05	3.67E-05	7.05E-04
GI TRACT S WALL	G	1.12E-03	1.56E-04	1.99E-02	1.38E-03	1.34E-03	6.59E-04	1.22E-03	7.68E-04	7.66E-04	7.66E-04	5.64E-04
	B	0.0	0.0	1.16E-01	0.0	0.0	0.0	0.0	0.0	0.0	0.0	0.0
	T	1.12E-03	1.56E-04	1.35E-01	1.38E-03	1.34E-03	6.59E-04	1.22E-03	7.68E-04	7.66E-04	7.66E-04	5.64E-04
SI+CONT	G	4.13E-04	1.05E-03	1.00E-03	1.20E-02	6.17E-03	3.48E-03	1.12E-03	6.45E-04	1.24E-04	1.24E-04	6.15E-04
	B	0.0	0.0	0.0	7.22E-02	0.0	0.0	0.0	0.0	0.0	0.0	0.0
	T	4.13E-04	1.05E-03	1.00E-03	8.42E-02	6.17E-03	3.48E-03	1.12E-03	6.45E-04	1.24E-04	1.24E-04	6.15E-04
ULI WALL	G	4.00E-04	8.58E-04	1.40E-03	8.85E-03	1.66E-02	1.70E-03	1.17E-03	9.30E-04	1.71E-04	1.71E-04	6.49E-04
	B	0.0	0.0	0.0	0.0	1.31E-01	0.0	0.0	0.0	0.0	0.0	0.0
	T	4.00E-04	8.58E-04	1.40E-03	8.85E-03	1.48E-01	1.70E-03	1.17E-03	9.30E-04	1.71E-04	1.71E-04	6.49E-04
LLI WALL	G	1.51E-04	2.79E-03	5.47E-04	2.66E-03	1.17E-03	2.00E-02	3.93E-04	1.43E-04	3.02E-05	3.02E-05	6.73E-04
	B	0.0	0.0	0.0	0.0	0.0	2.14E-01	0.0	0.0	0.0	0.0	0.0
	T	1.51E-04	2.79E-03	5.47E-04	2.66E-03	1.17E-03	2.34E-01	3.93E-04	1.43E-04	3.02E-05	3.02E-05	6.73E-04
KIDNEYS	G	4.27E-03	1.84E-04	1.29E-03	1.20E-03	1.10E-03	3.61E-04	2.84E-02	1.48E-03	4.40E-04	4.40E-04	5.75E-04
	B	0.0	0.0	0.0	0.0	0.0	0.0	1.86E-01	0.0	0.0	0.0	0.0
	T	4.27E-03	1.84E-04	1.29E-03	1.20E-03	1.10E-03	3.61E-04	2.15E-01	1.48E-03	4.40E-04	4.40E-04	5.75E-04
LIVER	G	1.90E-03	1.19E-04	8.02E-04	7.28E-04	9.87E-04	1.67E-04	1.54E-03	9.94E-03	9.40E-04	9.40E-04	4.47E-04
	B	0.0	0.0	0.0	0.0	0.0	0.0	0.0	3.21E-02	0.0	0.0	0.0
	T	1.90E-03	1.19E-04	8.02E-04	7.28E-04	9.87E-04	1.67E-04	1.54E-03	4.20E-02	9.40E-04	9.40E-04	4.47E-04
LUNGS	G	9.44E-04	3.05E-05	7.25E-04	1.37E-04	1.62E-04	5.76E-05	3.84E-04	9.76E-04	5.68E-03	5.68E-03	5.29E-04
	B	0.0	0.0	0.0	0.0	0.0	0.0	0.0	0.0	5.78E-02	5.78E-02	0.0
	T	9.44E-04	3.05E-05	7.25E-04	1.37E-04	1.62E-04	5.76E-05	3.84E-04	9.76E-04	6.35E-02	6.35E-02	5.29E-04
RESP LYM NODE	G	9.44E-04	3.05E-05	7.25E-04	1.37E-04	1.62E-04	5.76E-05	3.84E-04	9.76E-04	5.68E-03	5.68E-03	5.29E-04
	B	0.0	0.0	0.0	0.0	0.0	0.0	0.0	0.0	5.78E-02	3.85E 00	0.0
	T	9.44E-04	3.05E-05	7.25E-04	1.37E-04	1.62E-04	5.76E-05	3.84E-04	9.76E-04	6.34E-02	3.86E 00	5.29E-04
MUSCLE*	G	6.10E-04	7.05E-04	5.64E-04	6.15E-04	5.89E-04	6.73E-04	5.75E-04	4.47E-04	5.29E-04	5.29E-04	6.04E-04
	B	0.0	0.0	0.0	0.0	0.0	0.0	0.0	0.0	0.0	0.0	2.06E-03
	T	6.10E-04	7.05E-04	5.64E-04	6.15E-04	5.89E-04	6.73E-04	5.75E-04	4.47E-04	5.29E-04	5.29E-04	2.67E-03
OVARIES	G	1.29E-04	2.67E-03	3.28E-04	3.30E-03	3.60E-03	6.43E-03	4.94E-04	2.75E-04	6.91E-05	6.91E-05	7.84E-04
	B	0.0	0.0	0.0	0.0	0.0	0.0	0.0	0.0	0.0	0.0	0.0
	T	1.29E-04	2.67E-03	3.28E-04	3.30E-03	3.60E-03	6.43E-03	4.94E-04	2.75E-04	6.91E-05	6.91E-05	7.84E-04

25-MANGANESE-52M CONTINUED

SOURCE ORGANS

TARGET ORGANS		ADRENALS	BLAD CON	S CONT	SI+CONT	ULI CONT	LLI CONT	KIDNEYS	LIVER	LUNG	RESP LYM NODE	MUSCLE*
PANCREAS	G	3.36E-03	1.05E-04	6.72E-03	7.44E-04	7.72E-04	2.79E-04	2.58E-03	1.72E-03	1.03E-03	1.03E-03	7.09E-04
	B	0.0	0.0	0.0	0.0	0.0	0.0	0.0	0.0	0.0	0.0	0.0
	T	3.36E-03	1.05E-04	6.72E-03	7.44E-04	7.72E-04	2.79E-04	2.58E-03	1.72E-03	1.03E-03	1.03E-03	7.09E-04
SKELETON BONE	G	5.32E-04	2.28E-04	2.36E-04	3.08E-04	2.81E-04	4.03E-04	3.89E-04	2.92E-04	3.85E-04	3.85E-04	4.50E-04
	B	0.0	0.0	0.0	0.0	0.0	0.0	0.0	0.0	0.0	0.0	0.0
	T	5.32E-04	2.28E-04	2.36E-04	3.08E-04	2.81E-04	4.03E-04	3.89E-04	2.92E-04	3.85E-04	3.85E-04	4.50E-04
R MARROW	G	9.42E-04	4.73E-04	3.95E-04	9.52E-04	8.18E-04	1.19E-03	9.75E-04	4.24E-04	4.90E-04	4.90E-04	5.23E-04
	B	0.0	0.0	0.0	0.0	0.0	0.0	0.0	0.0	0.0	0.0	0.0
	T	9.42E-04	4.73E-04	3.95E-04	9.52E-04	8.18E-04	1.19E-03	9.75E-04	4.24E-04	4.90E-04	4.90E-04	5.23E-04
Y MARROW	G	5.16E-04	2.08E-04	3.32E-04	4.22E-04	3.98E-04	5.00E-04	4.80E-04	4.32E-04	3.99E-04	3.99E-04	4.27E-04
	B	0.0	0.0	0.0	0.0	0.0	0.0	0.0	0.0	0.0	0.0	0.0
	T	5.16E-04	2.08E-04	3.32E-04	4.22E-04	3.98E-04	5.00E-04	4.80E-04	4.32E-04	3.99E-04	3.99E-04	4.27E-04
T E CL	G	5.32E-04	2.28E-04	2.36E-04	3.08E-04	2.81E-04	4.03E-04	3.89E-04	2.92E-04	3.85E-04	3.85E-04	4.50E-04
	B	0.0	0.0	0.0	0.0	0.0	0.0	0.0	0.0	0.0	0.0	0.0
	T	5.32E-04	2.28E-04	2.36E-04	3.08E-04	2.81E-04	4.03E-04	3.89E-04	2.92E-04	3.85E-04	3.85E-04	4.50E-04
SKIN	G	2.95E-04	2.75E-04	2.47E-04	2.35E-04	2.31E-04	2.62E-04	2.71E-04	2.52E-04	2.82E-04	2.82E-04	3.75E-04
	B	0.0	0.0	0.0	0.0	0.0	0.0	0.0	0.0	0.0	0.0	0.0
	T	2.95E-04	2.75E-04	2.47E-04	2.35E-04	2.31E-04	2.62E-04	2.71E-04	2.52E-04	2.82E-04	2.82E-04	3.75E-04
SPLEEN	G	2.37E-03	8.76E-05	3.70E-03	6.53E-04	5.54E-04	3.90E-04	3.22E-03	3.97E-04	7.73E-04	7.73E-04	5.88E-04
	B	0.0	0.0	0.0	0.0	0.0	0.0	0.0	0.0	0.0	0.0	0.0
	T	2.37E-03	8.76E-05	3.70E-03	6.53E-04	5.54E-04	3.90E-04	3.22E-03	3.97E-04	7.73E-04	7.73E-04	5.88E-04
TESTES	G	3.59E-05	1.84E-03	4.72E-05	2.01E-04	1.90E-04	7.09E-04	6.90E-05	5.82E-05	1.44E-05	1.44E-05	5.05E-04
	B	0.0	0.0	0.0	0.0	0.0	0.0	0.0	0.0	0.0	0.0	0.0
	T	3.59E-05	1.84E-03	4.72E-05	2.01E-04	1.90E-04	7.09E-04	6.90E-05	5.82E-05	1.44E-05	1.44E-05	5.05E-04
THYMUS	G	3.11E-04	1.82E-05	2.11E-04	6.43E-05	6.96E-05	2.98E-05	1.44E-04	3.94E-04	1.62E-03	1.62E-03	7.83E-04
	B	0.0	0.0	0.0	0.0	0.0	0.0	0.0	0.0	0.0	0.0	0.0
	T	3.11E-04	1.82E-05	2.11E-04	6.43E-05	6.96E-05	2.98E-05	1.44E-04	3.94E-04	1.62E-03	1.62E-03	7.83E-04
THYROID	G	9.45E-05	6.82E-06	6.97E-05	2.20E-05	2.32E-05	1.12E-05	4.61E-05	8.18E-05	4.28E-04	4.28E-04	5.47E-04
	B	0.0	0.0	0.0	0.0	0.0	0.0	0.0	0.0	0.0	0.0	0.0
	T	9.45E-05	6.82E-06	6.97E-05	2.20E-05	2.32E-05	1.12E-05	4.61E-05	8.18E-05	4.28E-04	4.28E-04	5.47E-04
UTERUS	G	1.75E-04	5.53E-03	3.93E-04	3.29E-03	1.90E-03	2.26E-03	4.01E-04	2.19E-04	7.88E-05	7.88E-05	7.48E-04
	B	0.0	0.0	0.0	0.0	0.0	0.0	0.0	0.0	0.0	0.0	0.0
	T	1.75E-04	5.53E-03	3.93E-04	3.29E-03	1.90E-03	2.26E-03	4.01E-04	2.19E-04	7.88E-05	7.88E-05	7.48E-04
T BODY	G	6.67E-04	7.36E-04	7.02E-04	7.72E-04	7.53E-04	7.50E-04	6.75E-04	6.73E-04	5.71E-04	5.71E-04	5.76E-04
	B	8.25E-04	9.28E-05	2.48E-04	6.60E-04	3.94E-04	4.89E-04	8.25E-04	8.25E-04	8.25E-04	8.25E-04	8.25E-04
	T	1.49E-03	8.29E-04	9.50E-04	1.43E-03	1.15E-03	1.24E-03	1.50E-03	1.50E-03	1.40E-03	1.40E-03	1.40E-03

CONTINUED NEXT PAGE

25-MANGANESE-52M CONTINUED

TARGET ORGANS		SOURCE ORGANS										
		OVARIES	PANCREAS	COR BONE	CAN BONE	R MARROW	Y MARROW	SKIN	SPLEEN	TESTES	THYROID	T BODY
ADRENALS	G	2.33E-04	3.21E-03	7.60E-04	7.60E-04	8.08E-04	4.67E-04	3.19E-04	2.50E-03	3.59E-05	8.81E-05	1.08E-03
	B	0.0	0.0	0.0	0.0	0.0	0.0	0.0	0.0	0.0	0.0	8.25E-04
	T	2.33E-04	3.21E-03	7.60E-04	7.60E-04	8.08E-04	4.67E-04	3.19E-04	2.50E-03	3.59E-05	8.81E-05	1.90E-03
BLAD WALL	G	2.66E-03	1.02E-04	2.88E-04	2.88E-04	3.89E-04	1.44E-04	3.04E-04	9.16E-05	1.92E-03	6.86E-06	7.34E-04
	B	0.0	0.0	0.0	0.0	0.0	0.0	0.0	0.0	0.0	0.0	8.25E-04
	T	2.66E-03	1.02E-04	2.88E-04	2.88E-04	3.89E-04	1.44E-04	3.04E-04	9.16E-05	1.92E-03	6.86E-06	1.56E-03
GI TRACT S WALL	G	3.74E-04	6.58E-03	2.39E-04	2.39E-04	4.31E-04	2.94E-04	2.63E-04	3.96E-03	4.86E-05	6.71E-05	6.20E-04
	B	0.0	0.0	0.0	0.0	0.0	0.0	0.0	0.0	0.0	0.0	8.25E-04
	T	3.74E-04	6.58E-03	2.39E-04	2.39E-04	4.31E-04	2.94E-04	2.63E-04	3.96E-03	4.86E-05	6.71E-05	1.45E-03
SI+CONT	G	4.49E-03	7.16E-04	3.15E-04	3.15E-04	1.02E-03	4.18E-04	2.37E-04	5.78E-04	2.22E-04	1.46E-05	7.72E-04
	B	0.0	0.0	0.0	0.0	0.0	0.0	0.0	0.0	0.0	0.0	8.25E-04
	T	4.49E-03	7.16E-04	3.15E-04	3.15E-04	1.02E-03	4.18E-04	2.37E-04	5.78E-04	2.22E-04	1.46E-05	1.60E-03
ULI WALL	G	4.26E-03	8.69E-04	2.94E-04	2.94E-04	7.83E-04	3.81E-04	2.35E-04	5.78E-04	1.42E-04	1.78E-05	7.34E-04
	B	0.0	0.0	0.0	0.0	0.0	0.0	0.0	0.0	0.0	0.0	8.25E-04
	T	4.26E-03	8.69E-04	2.94E-04	2.94E-04	7.83E-04	3.81E-04	2.35E-04	5.78E-04	1.42E-04	1.78E-05	1.56E-03
LLI WALL	G	5.40E-03	2.57E-04	3.89E-04	3.89E-04	1.16E-03	3.69E-04	2.47E-04	2.74E-04	1.07E-03	9.66E-06	7.76E-04
	B	0.0	0.0	0.0	0.0	0.0	0.0	0.0	0.0	0.0	0.0	8.25E-04
	T	5.40E-03	2.57E-04	3.89E-04	3.89E-04	1.16E-03	3.69E-04	2.47E-04	2.74E-04	1.07E-03	9.66E-06	1.60E-03
KIDNEYS	G	4.42E-04	2.41E-03	3.96E-04	3.96E-04	9.95E-04	4.75E-04	3.06E-04	3.33E-03	5.81E-05	5.01E-05	6.70E-04
	B	0.0	0.0	0.0	0.0	0.0	0.0	0.0	0.0	0.0	0.0	8.25E-04
	T	4.42E-04	2.41E-03	3.96E-04	3.96E-04	9.95E-04	4.75E-04	3.06E-04	3.33E-03	5.81E-05	5.01E-05	1.50E-03
LIVER	G	2.62E-04	1.60E-03	2.91E-04	2.91E-04	4.20E-04	4.46E-04	2.78E-04	4.38E-04	3.87E-05	7.99E-05	6.75E-04
	B	0.0	0.0	0.0	0.0	0.0	0.0	0.0	0.0	0.0	0.0	8.25E-04
	T	2.62E-04	1.60E-03	2.91E-04	2.91E-04	4.20E-04	4.46E-04	2.78E-04	4.38E-04	3.87E-05	7.99E-05	1.50E-03
LUNGS	G	6.02E-05	9.11E-04	3.93E-04	3.93E-04	4.99E-04	4.16E-04	2.88E-04	8.38E-04	1.35E-05	4.33E-04	5.69E-04
	B	0.0	0.0	0.0	0.0	0.0	0.0	0.0	0.0	0.0	0.0	8.25E-04
	T	6.02E-05	9.11E-04	3.93E-04	3.93E-04	4.99E-04	4.16E-04	2.88E-04	8.38E-04	1.35E-05	4.33E-04	1.39E-03
RESP LYM NODE	G	6.02E-05	9.11E-04	3.93E-04	3.93E-04	4.99E-04	4.16E-04	2.88E-04	8.38E-04	1.35E-05	4.33E-04	5.69E-04
	B	0.0	0.0	0.0	0.0	0.0	0.0	0.0	0.0	0.0	0.0	8.25E-04
	T	6.02E-05	9.11E-04	3.93E-04	3.93E-04	4.99E-04	4.16E-04	2.88E-04	8.38E-04	1.35E-05	4.33E-04	1.39E-03
MUSCLE*	G	7.84E-04	7.09E-04	4.50E-04	4.50E-04	5.25E-04	4.15E-04	3.75E-04	5.88E-04	5.05E-04	5.47E-04	5.76E-04
	B	0.0	0.0	0.0	0.0	0.0	0.0	0.0	0.0	0.0	0.0	8.25E-04
	T	7.84E-04	7.09E-04	4.50E-04	4.50E-04	5.25E-04	4.15E-04	3.75E-04	5.88E-04	5.05E-04	5.47E-04	1.40E-03
OVARIES	G	2.99E-01	2.49E-04	3.94E-04	3.94E-04	1.42E-03	3.64E-04	1.83E-04	3.37E-04	2.16E-47	1.15E-05	7.47E-04
	B	5.25E 00	0.0	0.0	0.0	0.0	0.0	0.0	0.0	0.0	0.0	8.25E-04
	T	5.55E 00	2.49E-04	3.94E-04	3.94E-04	1.42E-03	3.64E-04	1.83E-04	3.37E-04	2.16E-47	1.15E-05	1.57E-03

25-MANGANESE-52M CONTINUED

TARGET ORGANS		SOURCE ORGANS										
		OVARIES	PANCREAS	COR BONE	CAN BONE	R MARROW	Y MARROW	SKIN	SPLEEN	TESTES	THYROID	T BODY
PANCREAS	G	2.39E-04	8.31E-02	4.22E-04	4.22E-04	5.81E-04	4.74E-04	2.29E-04	7.17E-03	3.84E-05	1.07E-04	6.60E-04
	B	0.0	5.78E-01	0.0	0.0	0.0	0.0	0.0	0.0	0.0	0.0	8.25E-04
	T	2.39E-04	6.61E-01	4.22E-04	4.22E-04	5.81E-04	4.74E-04	2.29E-04	7.17E-03	3.84E-05	1.07E-04	1.48E-03
SKELETON BONE	G	3.57E-04	3.63E-04	1.35E-03	1.35E-03	9.01E-04	1.01E-03	3.47E-04	3.06E-04	2.62E-04	3.01E-04	5.78E-04
	B	0.0	0.0	1.16E-02	6.60E-03	3.30E-03	0.0	0.0	0.0	0.0	0.0	8.25E-04
	T	3.57E-04	3.63E-04	1.29E-02	7.94E-03	4.21E-03	1.01E-03	3.47E-04	3.06E-04	2.62E-04	3.01E-04	1.40E-03
R MARROW	G	1.16E-03	6.76E-04	1.21E-03	1.21E-03	2.87E-03	1.03E-03	3.26E-04	4.43E-04	2.03E-04	3.32E-04	6.32E-04
	B	0.0	0.0	9.54E-04	1.65E-02	2.75E-02	0.0	0.0	0.0	0.0	0.0	8.25E-04
	T	1.16E-03	6.76E-04	2.16E-03	1.77E-02	3.04E-02	1.03E-03	3.26E-04	4.43E-04	2.03E-04	3.32E-04	1.46E-03
Y MARROW	G	4.71E-04	4.28E-04	1.16E-03	1.16E-03	1.11E-03	1.71E-03	3.69E-04	4.56E-04	1.16E-04	1.66E-04	5.36E-04
	B	0.0	0.0	0.0	0.0	0.0	3.85E-02	0.0	0.0	0.0	0.0	8.25E-04
	T	4.71E-04	4.28E-04	1.16E-03	1.16E-03	1.11E-03	4.02E-02	3.69E-04	4.56E-04	1.16E-04	1.66E-04	1.36E-03
T E CL	G	3.57E-04	3.63E-04	1.35E-03	1.35E-03	1.21E-03	1.11E-03	3.47E-04	3.06E-04	2.62E-04	3.01E-04	5.78E-04
	B	0.0	0.0	7.05E-03	9.80E-03	1.27E-02	9.63E-03	0.0	0.0	0.0	0.0	8.25E-04
	T	3.57E-04	3.63E-04	8.40E-03	1.11E-02	1.39E-02	1.07E-02	3.47E-04	3.06E-04	2.62E-04	3.01E-04	1.40E-03
SKIN	G	2.20E-04	2.18E-04	3.58E-04	3.58E-04	3.13E-04	3.84E-04	8.19E-04	2.60E-04	6.48E-04	3.66E-04	3.84E-04
	B	0.0	0.0	0.0	0.0	0.0	0.0	2.22E-02	0.0	0.0	0.0	8.25E-04
	T	2.20E-04	2.18E-04	3.58E-04	3.58E-04	3.13E-04	3.84E-04	2.30E-02	2.60E-04	6.48E-04	3.66E-04	1.21E-03
SPLEEN	G	2.43E-04	7.24E-03	3.02E-04	3.02E-04	3.58E-04	4.56E-04	2.59E-04	5.03E-02	3.98E-05	6.90E-05	6.59E-04
	B	0.0	0.0	0.0	0.0	0.0	0.0	0.0	3.21E-01	0.0	0.0	8.25E-04
	T	2.43E-04	7.24E-03	3.02E-04	3.02E-04	3.58E-04	4.56E-04	2.59E-04	3.71E-01	3.98E-05	6.90E-05	1.48E-03
TESTES	G	2.16E-47	4.34E-05	2.71E-04	2.71E-04	1.22E-04	3.70E-04	3.67E-04	4.65E-05	1.38E-01	3.04E-06	6.90E-04
	B	0.0	0.0	0.0	0.0	0.0	0.0	0.0	0.0	1.65E 00	0.0	8.25E-04
	T	2.16E-47	4.34E-05	2.71E-04	2.71E-04	1.22E-04	3.70E-04	3.67E-04	4.65E-05	1.79E 00	3.04E-06	1.52E-03
THYMUS	G	3.16E-05	2.45E-04	2.50E-04	2.50E-04	3.04E-04	2.40E-04	2.96E-04	1.34E-04	7.71E-06	1.71E-03	6.84E-04
	B	0.0	0.0	0.0	0.0	0.0	0.0	0.0	0.0	0.0	0.0	8.25E-04
	T	3.16E-05	2.45E-04	2.50E-04	2.50E-04	3.04E-04	2.40E-04	2.96E-04	1.34E-04	7.71E-06	1.71E-03	1.51E-03
THYROID	G	1.14E-05	7.78E-05	4.48E-04	4.48E-04	3.20E-04	2.38E-04	3.14E-04	6.79E-05	3.04E-06	1.90E-01	5.54E-04
	B	0.0	0.0	0.0	0.0	0.0	0.0	0.0	0.0	0.0	2.89E 00	8.25E-04
	T	1.14E-05	7.78E-05	4.48E-04	4.48E-04	3.20E-04	2.38E-04	3.14E-04	6.79E-05	3.04E-06	3.08E 00	1.38E-03
UTERUS	G	6.69E-03	2.46E-04	2.56E-04	2.56E-04	7.27E-04	2.18E-04	2.57E-04	1.42E-04	2.16E-47	1.10E-05	6.94E-04
	B	0.0	0.0	0.0	0.0	0.0	0.0	0.0	0.0	0.0	0.0	8.25E-04
	T	6.69E-03	2.46E-04	2.56E-04	2.56E-04	7.27E-04	2.18E-04	2.57E-04	1.42E-04	2.16E-47	1.10E-05	1.52E-03
T BODY	G	7.84E-04	7.71E-04	5.73E-04	5.73E-04	6.33E-04	5.12E-04	3.76E-04	6.71E-04	5.74E-04	5.21E-04	5.73E-04
	B	8.25E-04	8.25E-04	8.25E-04	8.25E-04	8.25E-04	8.25E-04	8.25E-04	8.25E-04	8.25E-04	8.25E-04	8.25E-04
	T	1.61E-03	1.60E-03	1.40E-03	1.40E-03	1.46E-03	1.34E-03	1.20E-03	1.50E-03	1.40E-03	1.35E-03	1.40E-03

*"MUSCLE" VALUES MAY BE USED FOR "SEPARABLE FAT" WITH ADJUSTMENT (SEE TEXT)
PRINCIPLE REFERENCE-NUCLEAR DATA, VOLUME 3, NOS. 5, 6, APRIL (1970)
DATE DECAY DATA REVIEWED-FEBRUARY 1972

S, AVERAGE DOSE EQUIVALENT PER UNIT ACCUMULATED ACTIVITY (REM/UCI-DAY), FOR 25-MANGANESE-52 (TR=5.670E 00 DAYS)

DATE OF TABLE 11-27-74

SOURCE ORGANS

TARGET ORGANS		ADRENALS	BLAD CON	S CONT	SI+CONT	ULI CONT	LLI CONT	KIDNEYS	LIVER	LUNG	RESP LYM NODE	MUSCLE*
ADRENALS	G	2.63E-01	1.47E-04	1.56E-03	6.91E-04	6.64E-04	2.88E-04	6.96E-03	2.69E-03	1.28E-03	1.28E-03	8.78E-04
	B	2.80E-01	0.0	0.0	0.0	0.0	0.0	0.0	0.0	0.0	0.0	0.0
	T	5.42E-01	1.47E-04	1.56E-03	6.91E-04	6.64E-04	2.88E-04	6.96E-03	2.69E-03	1.28E-03	1.28E-03	8.78E-04
BLAD WALL	G	1.32E-04	3.98E-02	2.79E-04	1.67E-03	1.08E-03	3.27E-03	2.63E-04	1.46E-04	5.42E-05	5.42E-05	1.01E-03
	B	0.0	9.79E-03	0.0	0.0	0.0	0.0	0.0	0.0	0.0	0.0	0.0
	T	1.32E-04	4.96E-02	2.79E-04	1.67E-03	1.08E-03	3.27E-03	2.63E-04	1.46E-04	5.42E-05	5.42E-05	1.01E-03
GI TRACT S WALL	G	1.63E-03	2.62E-04	2.87E-02	1.99E-03	1.95E-03	9.17E-04	1.78E-03	1.12E-03	1.11E-03	1.11E-03	8.12E-04
	B	0.0	0.0	7.83E-03	0.0	0.0	0.0	0.0	0.0	0.0	0.0	0.0
	T	1.63E-03	2.62E-04	3.66E-02	1.99E-03	1.95E-03	9.17E-04	1.78E-03	1.12E-03	1.11E-03	1.11E-03	8.12E-04
SI+CONT	G	5.83E-04	1.53E-03	1.43E-03	1.71E-02	8.85E-03	5.00E-03	1.61E-03	9.24E-04	1.84E-04	1.84E-04	8.83E-04
	B	0.0	0.0	0.0	4.89E-03	0.0	0.0	0.0	0.0	0.0	0.0	0.0
	T	5.83E-04	1.53E-03	1.43E-03	2.20E-02	8.85E-03	5.00E-03	1.61E-03	9.24E-04	1.84E-04	1.84E-04	8.83E-04
ULI WALL	G	6.03E-04	1.18E-03	1.91E-03	1.27E-02	2.40E-02	2.37E-03	1.66E-03	1.33E-03	2.47E-04	2.47E-04	9.35E-04
	B	0.0	0.0	0.0	0.0	8.90E-03	0.0	0.0	0.0	0.0	0.0	0.0
	T	6.03E-04	1.18E-03	1.91E-03	1.27E-02	3.29E-02	2.37E-03	1.66E-03	1.33E-03	2.47E-04	2.47E-04	9.35E-04
LLI WALL	G	1.93E-04	3.90E-03	7.96E-04	3.83E-03	1.75E-03	2.87E-02	5.49E-04	1.91E-04	4.77E-05	4.77E-05	9.67E-04
	B	0.0	0.0	0.0	0.0	0.0	1.45E-02	0.0	0.0	0.0	0.0	0.0
	T	1.93E-04	3.90E-03	7.96E-04	3.83E-03	1.75E-03	4.32E-02	5.49E-04	1.91E-04	4.77E-05	4.77E-05	9.67E-04
KIDNEYS	G	6.17E-03	2.49E-04	1.86E-03	1.74E-03	1.61E-03	5.31E-04	4.06E-02	2.12E-03	6.14E-04	6.14E-04	8.29E-04
	B	0.0	0.0	0.0	0.0	0.0	0.0	1.26E-02	0.0	0.0	0.0	0.0
	T	6.17E-03	2.49E-04	1.86E-03	1.74E-03	1.61E-03	5.31E-04	5.32E-02	2.12E-03	6.14E-04	6.14E-04	8.29E-04
LIVER	G	2.71E-03	1.75E-04	1.14E-03	1.06E-03	1.42E-03	2.40E-04	2.19E-03	1.43E-02	1.35E-03	1.35E-03	6.46E-04
	B	0.0	0.0	0.0	0.0	0.0	0.0	0.0	2.18E-03	0.0	0.0	0.0
	T	2.71E-03	1.75E-04	1.14E-03	1.06E-03	1.42E-03	2.40E-04	2.19E-03	1.64E-02	1.35E-03	1.35E-03	6.46E-04
LUNGS	G	1.36E-03	4.72E-05	1.03E-03	2.00E-04	2.40E-04	8.95E-05	5.63E-04	1.40E-03	8.15E-03	8.15E-03	7.60E-04
	B	0.0	0.0	0.0	0.0	0.0	0.0	0.0	0.0	3.92E-03	3.92E-03	0.0
	T	1.36E-03	4.72E-05	1.03E-03	2.00E-04	2.40E-04	8.95E-05	5.63E-04	1.40E-03	1.21E-02	1.21E-02	7.60E-04
RESP LYM NODE	G	1.36E-03	4.72E-05	1.03E-03	2.00E-04	2.40E-04	8.95E-05	5.63E-04	1.40E-03	8.13E-03	8.15E-03	7.60E-04
	B	0.0	0.0	0.0	0.0	0.0	0.0	0.0	0.0	3.77E-03	2.61E-01	0.0
	T	1.36E-03	4.72E-05	1.03E-03	2.00E-04	2.40E-04	8.95E-05	5.63E-04	1.40E-03	1.19E-02	2.69E-01	7.60E-04
MUSCLE*	G	8.78E-04	1.01E-03	8.12E-04	8.83E-04	8.48E-04	9.67E-04	8.29E-04	6.46E-04	7.60E-04	7.60E-04	8.74E-04
	B	0.0	0.0	0.0	0.0	0.0	0.0	0.0	0.0	0.0	0.0	1.40E-04
	T	8.78E-04	1.01E-03	8.12E-04	8.83E-04	8.48E-04	9.67E-04	8.29E-04	6.46E-04	7.60E-04	7.60E-04	1.01E-03
OVARIES	G	2.20E-04	3.38E-03	6.29E-04	5.13E-03	4.64E-03	9.41E-03	7.98E-04	4.33E-04	1.01E-04	1.01E-04	1.13E-03
	B	0.0	0.0	0.0	0.0	0.0	0.0	0.0	0.0	0.0	0.0	0.0
	T	2.20E-04	3.38E-03	6.29E-04	5.13E-03	4.64E-03	9.41E-03	7.98E-04	4.33E-04	1.01E-04	1.01E-04	1.13E-03

25-MANGANESE-52 CONTINUED

TARGET ORGANS		SOURCE ORGANS										
		ADRENALS	BLAD CON	S CONT	SI+CONT	ULI CONT	LLI CONT	KIDNEYS	LIVER	LUNG	RESP LYM NODE	MUSCLE*
PANCREAS	G	4.89E-03	1.60E-04	9.49E-03	1.09E-03	1.15E-03	4.08E-04	3.79E-03	2.43E-03	1.39E-03	1.39E-03	1.01E-03
	B	0.0	0.0	0.0	0.0	0.0	0.0	0.0	0.0	0.0	0.0	0.0
	T	4.89E-03	1.60E-04	9.49E-03	1.09E-03	1.15E-03	4.08E-04	3.79E-03	2.43E-03	1.39E-03	1.39E-03	1.01E-03
SKELETON BONE	G	7.65E-04	3.22E-04	3.37E-04	4.44E-04	3.99E-04	5.75E-04	5.55E-04	4.15E-04	5.54E-04	5.54E-04	6.49E-04
	B	0.0	0.0	0.0	0.0	0.0	0.0	0.0	0.0	0.0	0.0	0.0
	T	7.65E-04	3.22E-04	3.37E-04	4.44E-04	3.99E-04	5.75E-04	5.55E-04	4.15E-04	5.54E-04	5.54E-04	6.49E-04
R MARROW	G	1.35E-03	6.69E-04	5.63E-04	1.37E-03	1.16E-03	1.70E-03	1.39E-03	5.94E-04	7.05E-04	7.05E-04	7.49E-04
	B	0.0	0.0	0.0	0.0	0.0	0.0	0.0	0.0	0.0	0.0	0.0
	T	1.35E-03	6.69E-04	5.63E-04	1.37E-03	1.16E-03	1.70E-03	1.39E-03	5.94E-04	7.05E-04	7.05E-04	7.49E-04
Y MARROW	G	7.44E-04	2.96E-04	4.71E-04	6.08E-04	5.64E-04	7.11E-04	6.85E-04	6.16E-04	5.77E-04	5.77E-04	6.13E-04
	B	0.0	0.0	0.0	0.0	0.0	0.0	0.0	0.0	0.0	0.0	0.0
	T	7.44E-04	2.96E-04	4.71E-04	6.08E-04	5.64E-04	7.11E-04	6.85E-04	6.16E-04	5.77E-04	5.77E-04	6.13E-04
T E CL	G	7.65E-04	3.22E-04	3.37E-04	4.44E-04	3.99E-04	5.75E-04	5.55E-04	4.15E-04	5.54E-04	5.54E-04	6.49E-04
	B	0.0	0.0	0.0	0.0	0.0	0.0	0.0	0.0	0.0	0.0	0.0
	T	7.65E-04	3.22E-04	3.37E-04	4.44E-04	3.99E-04	5.75E-04	5.55E-04	4.15E-04	5.54E-04	5.54E-04	6.49E-04
SKIN	G	4.29E-04	4.04E-04	3.59E-04	3.42E-04	3.33E-04	3.75E-04	3.92E-04	3.66E-04	4.07E-04	4.07E-04	5.47E-04
	B	0.0	0.0	0.0	0.0	0.0	0.0	0.0	0.0	0.0	0.0	0.0
	T	4.29E-04	4.04E-04	3.59E-04	3.42E-04	3.33E-04	3.75E-04	3.92E-04	3.66E-04	4.07E-04	4.07E-04	5.47E-04
SPLEEN	G	3.40E-03	1.34E-04	5.33E-03	9.27E-04	8.07E-04	5.85E-04	4.66E-03	6.04E-04	1.15E-03	1.15E-03	8.46E-04
	B	0.0	0.0	0.0	0.0	0.0	0.0	0.0	0.0	0.0	0.0	0.0
	T	3.40E-03	1.34E-04	5.33E-03	9.27E-04	8.07E-04	5.85E-04	4.66E-03	6.04E-04	1.15E-03	1.15E-03	8.46E-04
TESTES	G	5.31E-05	2.67E-03	8.33E-05	3.05E-04	2.93E-04	9.52E-04	1.01E-04	1.09E-04	2.15E-05	2.15E-05	7.25E-04
	B	0.0	0.0	0.0	0.0	0.0	0.0	0.0	0.0	0.0	0.0	0.0
	T	5.31E-05	2.67E-03	8.33E-05	3.05E-04	2.93E-04	9.52E-04	1.01E-04	1.09E-04	2.15E-05	2.15E-05	7.25E-04
THYMUS	G	4.09E-04	2.72E-05	3.85E-04	9.43E-05	1.02E-04	4.42E-05	1.51E-04	5.10E-04	2.37E-03	2.37E-03	1.02E-03
	B	0.0	0.0	0.0	0.0	0.0	0.0	0.0	0.0	0.0	0.0	0.0
	T	4.09E-04	2.72E-05	3.85E-04	9.43E-05	1.02E-04	4.42E-05	1.51E-04	5.10E-04	2.37E-03	2.37E-03	1.02E-03
THYROID	G	1.36E-04	1.02E-05	1.02E-04	3.26E-05	3.45E-05	1.67E-05	6.79E-05	1.19E-04	6.78E-04	6.78E-04	7.86E-04
	B	0.0	0.0	0.0	0.0	0.0	0.0	0.0	0.0	0.0	0.0	0.0
	T	1.36E-04	1.02E-05	1.02E-04	3.26E-05	3.45E-05	1.67E-05	6.79E-05	1.19E-04	6.78E-04	6.78E-04	7.86E-04
UTERUS	G	2.72E-04	8.01E-03	5.70E-04	4.73E-03	2.73E-03	3.22E-03	5.56E-04	2.90E-04	1.04E-04	1.04E-04	1.24E-03
	B	0.0	0.0	0.0	0.0	0.0	0.0	0.0	0.0	0.0	0.0	0.0
	T	2.72E-04	8.01E-03	5.70E-04	4.73E-03	2.73E-03	3.22E-03	5.56E-04	2.90E-04	1.04E-04	1.04E-04	1.24E-03
T BODY	G	9.61E-04	1.06E-03	1.01E-03	1.11E-03	1.08E-03	1.08E-03	9.70E-04	9.68E-04	8.22E-04	8.22E-04	8.33E-04
	B	5.59E-05	6.29E-06	1.68E-05	4.48E-05	2.67E-05	3.31E-05	5.59E-05	5.59E-05	5.59E-05	5.59E-05	5.59E-05
	T	1.02E-03	1.06E-03	1.03E-03	1.15E-03	1.11E-03	1.11E-03	1.03E-03	1.02E-03	8.78E-04	8.78E-04	8.89E-04

CONTINUED NEXT PAGE

25-MANGANESE-52 CONTINUED

TARGET ORGANS		SOURCE ORGANS										
		OVARIES	PANCREAS	COR BONE	CAN BONE	R MARROW	Y MARROW	SKIN	SPLEEN	TESTES	THYROID	T BODY
ADRENALS	G	3.31E-04	4.30E-03	1.10E-03	1.10E-03	1.38E-03	5.49E-04	4.77E-04	3.79E-03	5.31E-05	1.29E-04	1.39E-03
	B	0.0	0.0	0.0	0.0	0.0	0.0	0.0	0.0	0.0	0.0	5.59E-05
	T	3.31E-04	4.30E-03	1.10E-03	1.10E-03	1.38E-03	5.49E-04	4.77E-04	3.79E-03	5.31E-05	1.29E-04	1.44E-03
BLAD WALL	G	3.89E-03	1.25E-04	3.60E-04	3.60E-04	6.11E-04	2.06E-04	4.53E-04	1.66E-04	2.85E-03	1.03E-05	1.10E-03
	B	0.0	0.0	0.0	0.0	0.0	0.0	0.0	0.0	0.0	0.0	5.59E-05
	T	3.89E-03	1.25E-04	3.60E-04	3.60E-04	6.11E-04	2.06E-04	4.53E-04	1.66E-04	2.85E-03	1.03E-05	1.16E-03
GI TRACT S WALL	G	5.09E-04	9.47E-03	3.33E-04	3.33E-04	6.52E-04	4.30E-04	3.84E-04	5.52E-03	6.27E-05	9.34E-05	9.07E-04
	B	0.0	0.0	0.0	0.0	0.0	0.0	0.0	0.0	0.0	0.0	5.59E-05
	T	5.09E-04	9.47E-03	3.33E-04	3.33E-04	6.52E-04	4.30E-04	3.84E-04	5.52E-03	6.27E-05	9.34E-05	9.63E-04
SI+CONT	G	6.38E-03	1.04E-03	4.66E-04	4.66E-04	1.46E-03	5.96E-04	3.48E-04	8.26E-04	3.19E-04	2.35E-05	1.11E-03
	B	0.0	0.0	0.0	0.0	0.0	0.0	0.0	0.0	0.0	0.0	5.59E-05
	T	6.38E-03	1.04E-03	4.66E-04	4.66E-04	1.46E-03	5.96E-04	3.48E-04	8.26E-04	3.19E-04	2.35E-05	1.17E-03
ULI WALL	G	6.04E-03	1.26E-03	4.37E-04	4.37E-04	1.10E-03	5.35E-04	3.58E-04	8.26E-04	2.20E-04	2.75E-05	1.05E-03
	B	0.0	0.0	0.0	0.0	0.0	0.0	0.0	0.0	0.0	0.0	5.59E-05
	T	6.04E-03	1.26E-03	4.37E-04	4.37E-04	1.10E-03	5.35E-04	3.58E-04	8.26E-04	2.20E-04	2.75E-05	1.11E-03
LLI WALL	G	7.65E-03	3.61E-04	5.85E-04	5.85E-04	1.68E-03	5.13E-04	3.70E-04	3.83E-04	1.44E-03	1.44E-05	1.12E-03
	B	0.0	0.0	0.0	0.0	0.0	0.0	0.0	0.0	0.0	0.0	5.59E-05
	T	7.65E-03	3.61E-04	5.85E-04	5.85E-04	1.68E-03	5.13E-04	3.70E-04	3.83E-04	1.44E-03	1.44E-05	1.17E-03
KIDNEYS	G	6.36E-04	3.44E-03	6.20E-04	6.20E-04	1.41E-03	6.81E-04	4.47E-04	4.71E-03	8.76E-05	7.59E-05	9.87E-04
	B	0.0	0.0	0.0	0.0	0.0	0.0	0.0	0.0	0.0	0.0	5.59E-05
	T	6.36E-04	3.44E-03	6.20E-04	6.20E-04	1.41E-03	6.81E-04	4.47E-04	4.71E-03	8.76E-05	7.59E-05	1.04E-03
LIVER	G	3.81E-04	2.29E-03	4.21E-04	4.21E-04	5.96E-04	6.44E-04	4.00E-04	6.29E-04	6.04E-05	1.17E-04	9.94E-04
	B	0.0	0.0	0.0	0.0	0.0	0.0	0.0	0.0	0.0	0.0	5.59E-05
	T	3.81E-04	2.29E-03	4.21E-04	4.21E-04	5.96E-04	6.44E-04	4.00E-04	6.29E-04	6.04E-05	1.17E-04	1.05E-03
LUNGS	G	9.13E-05	1.31E-03	5.70E-04	5.70E-04	7.16E-04	6.00E-04	4.17E-04	1.20E-03	1.98E-05	6.42E-04	8.09E-04
	B	0.0	0.0	0.0	0.0	0.0	0.0	0.0	0.0	0.0	0.0	5.59E-05
	T	9.13E-05	1.31E-03	5.70E-04	5.70E-04	7.16E-04	6.00E-04	4.17E-04	1.20E-03	1.98E-05	6.42E-04	8.65E-04
RESP LYM NODE	G	9.13E-05	1.31E-03	5.70E-04	5.70E-04	7.16E-04	6.00E-04	4.17E-04	1.20E-03	1.98E-05	6.42E-04	8.09E-04
	B	0.0	0.0	0.0	0.0	0.0	0.0	0.0	0.0	0.0	0.0	5.59E-05
	T	9.13E-05	1.31E-03	5.70E-04	5.70E-04	7.16E-04	6.00E-04	4.17E-04	1.20E-03	1.98E-05	6.42E-04	8.65E-04
MUSCLE*	G	1.13E-03	1.01E-03	6.49E-04	6.49E-04	7.57E-04	5.97E-04	5.47E-04	8.46E-04	7.25E-04	7.86E-04	8.33E-04
	B	0.0	0.0	0.0	0.0	0.0	0.0	0.0	0.0	0.0	0.0	5.59E-05
	T	1.13E-03	1.01E-03	6.49E-04	6.49E-04	7.57E-04	5.97E-04	5.47E-04	8.46E-04	7.25E-04	7.86E-04	8.89E-04
OVARIES	G	4.33E-01	4.57E-04	5.59E-04	5.59E-04	1.86E-03	5.34E-04	3.07E-04	4.13E-04	9.55E-46	1.71E-05	9.72E-04
	B	3.56E-01	0.0	0.0	0.0	0.0	0.0	0.0	0.0	0.0	0.0	5.59E-05
	T	7.89E-01	4.57E-04	5.59E-04	5.59E-04	1.86E-03	5.34E-04	3.07E-04	4.13E-04	9.55E-46	1.71E-05	1.03E-03

25-MANGANESE-52 CONTINUED

TARGET ORGANS		SOURCE ORGANS										
		OVARIES	PANCREAS	COR BONE	CAN BONE	R MARROW	Y MARROW	SKIN	SPLEEN	TESTES	THYROID	T BODY
PANCREAS	G	4.18E-04	1.20E-01	6.05E-04	6.05E-04	7.60E-04	6.40E-04	3.15E-04	1.02E-02	6.08E-05	1.23E-04	9.41E-04
	B	0.0	3.92E-02	0.0	0.0	0.0	0.0	0.0	0.0	0.0	0.0	5.59E-05
	T	4.18E-04	1.59E-01	6.05E-04	6.05E-04	7.60E-04	6.40E-04	3.15E-04	1.02E-02	6.08E-05	1.23E-04	9.97E-04
SKELETON BONE	G	5.11E-04	5.15E-04	1.94E-03	1.94E-03	1.29E-03	1.45E-03	5.01E-04	4.40E-04	3.77E-04	4.30E-04	8.28E-04
	B	0.0	0.0	7.83E-04	5.11E-04	1.81E-04	0.0	0.0	0.0	0.0	0.0	5.59E-05
	T	5.11E-04	5.15E-04	2.73E-03	2.45E-03	1.48E-03	1.45E-03	5.01E-04	4.40E-04	3.77E-04	4.30E-04	8.84E-04
R MARROW	G	1.65E-03	9.60E-04	1.75E-03	1.75E-03	4.12E-03	1.49E-03	4.69E-04	6.37E-04	2.93E-04	4.69E-04	9.08E-04
	B	0.0	0.0	1.60E-05	9.06E-04	2.01E-03	0.0	0.0	0.0	0.0	0.0	5.59E-05
	T	1.65E-03	9.60E-04	1.77E-03	2.66E-03	6.13E-03	1.49E-03	4.69E-04	6.37E-04	2.93E-04	4.69E-04	9.64E-04
Y MARROW	G	6.73E-04	6.08E-04	1.67E-03	1.67E-03	1.60E-03	2.47E-03	5.32E-04	6.53E-04	1.67E-04	2.35E-04	7.71E-04
	B	0.0	0.0	0.0	0.0	0.0	2.61E-03	0.0	0.0	0.0	0.0	5.59E-05
	T	6.73E-04	6.08E-04	1.67E-03	1.67E-03	1.60E-03	5.08E-03	5.32E-04	6.53E-04	1.67E-04	2.35E-04	8.27E-04
T E CL	G	5.11E-04	5.15E-04	1.94E-03	1.94E-03	1.75E-03	1.61E-03	5.01E-04	4.40E-04	3.77E-04	4.30E-04	8.28E-04
	B	0.0	0.0	4.84E-04	8.64E-04	7.29E-04	6.53E-04	0.0	0.0	0.0	0.0	5.59E-05
	T	5.11E-04	5.15E-04	2.42E-03	2.80E-03	2.48E-03	2.26E-03	5.01E-04	4.40E-04	3.77E-04	4.30E-04	8.84E-04
SKIN	G	3.24E-04	3.22E-04	5.13E-04	5.13E-04	4.48E-04	5.55E-04	1.21E-03	3.77E-04	9.26E-04	5.34E-04	5.57E-04
	B	0.0	0.0	0.0	0.0	0.0	0.0	1.51E-03	0.0	0.0	0.0	5.59E-05
	T	3.24E-04	3.22E-04	5.13E-04	5.13E-04	4.48E-04	5.55E-04	2.71E-03	3.77E-04	9.26E-04	5.34E-04	6.12E-04
SPLEEN	G	3.49E-04	1.03E-02	4.60E-04	4.60E-04	5.58E-04	6.64E-04	4.05E-04	7.24E-02	4.91E-05	1.11E-04	9.64E-04
	B	0.0	0.0	0.0	0.0	0.0	0.0	0.0	2.18E-02	0.0	0.0	5.59E-05
	T	3.49E-04	1.03E-02	4.60E-04	4.60E-04	5.58E-04	6.64E-04	4.05E-04	9.42E-02	4.91E-05	1.11E-04	1.02E-03
TESTES	G	9.55E-46	6.90E-05	3.96E-04	3.96E-04	1.97E-04	5.30E-04	5.38E-04	6.84E-05	2.01E-01	4.56E-06	9.91E-04
	B	0.0	0.0	0.0	0.0	0.0	0.0	0.0	0.0	1.12E-01	0.0	5.59E-05
	T	9.55E-46	6.90E-05	3.96E-04	3.96E-04	1.97E-04	5.30E-04	5.38E-04	6.84E-05	3.13E-01	4.56E-06	1.05E-03
THYMUS	G	4.68E-05	3.42E-04	4.00E-04	4.00E-04	4.40E-04	3.24E-04	4.20E-04	2.64E-04	1.16E-05	2.36E-03	9.07E-04
	B	0.0	0.0	0.0	0.0	0.0	0.0	0.0	0.0	0.0	0.0	5.59E-05
	T	4.68E-05	3.42E-04	4.00E-04	4.00E-04	4.40E-04	3.24E-04	4.20E-04	2.64E-04	1.15E-05	2.36E-03	9.63E-04
THYROID	G	1.71E-05	8.03E-05	5.24E-04	5.24E-04	4.90E-04	3.38E-04	4.40E-04	9.96E-05	4.56E-06	2.75E-01	8.37E-04
	B	0.0	0.0	0.0	0.0	0.0	0.0	0.0	0.0	0.0	1.96E-01	5.59E-05
	T	1.71E-05	8.03E-05	5.24E-04	5.24E-04	4.90E-04	3.38E-04	4.40E-04	9.96E-05	4.56E-06	4.71E-01	8.93E-04
UTERUS	G	9.48E-03	3.53E-04	4.34E-04	4.34E-04	9.96E-04	3.36E-04	4.01E-04	2.54E-04	9.55E-46	1.64E-05	1.14E-03
	B	0.0	0.0	0.0	0.0	0.0	0.0	0.0	0.0	0.0	0.0	5.59E-05
	T	9.48E-03	3.53E-04	4.34E-04	4.34E-04	9.96E-04	3.36E-04	4.01E-04	2.54E-04	9.55E-46	1.64E-05	1.19E-03
T BODY	G	1.13E-03	1.10E-03	8.26E-04	8.26E-04	9.12E-04	7.38E-04	5.48E-04	9.65E-04	8.28E-04	7.51E-04	8.28E-04
	B	5.59E-05	5.59E-05	5.59E-05	5.59E-05	5.59E-05	5.59E-05	5.59E-05	5.59E-05	5.59E-05	5.59E-05	5.59E-05
	T	1.18E-03	1.16E-03	8.82E-04	8.82E-04	9.68E-04	7.94E-04	6.04E-04	1.02E-03	8.83E-04	8.07E-04	8.83E-04

*"MUSCLE" VALUES MAY BE USED FOR "SEPARABLE FAT" WITH ADJUSTMENT (SEE TEXT)
PRINCIPLE REFERENCE-NUCLEAR DATA, VOLUME 3, NOS. 5, 6, APRIL (1970)
DATE DECAY DATA REVIEWED-FEBRUARY 1972

S, AVERAGE DOSE EQUIVALENT PER UNIT ACCUMULATED ACTIVITY (REM/UCI-DAY), FOR 25-MANGANESE-54 (TR=3.125E 02 DAYS)

DATE OF TABLE 11-27-74

TARGET ORGANS		SOURCE ORGANS										
		ADRENALS	BLAD CON	S CONT	SI+CONT	ULI CONT	LLI CONT	KIDNEYS	LIVER	LUNG	RESP LYM NODE	MUSCLE*
ADRENALS	G	6.93E-02	3.52E-05	3.03E-04	1.70E-04	1.68E-04	7.08E-05	1.75E-03	6.84E-04	3.39E-04	3.39E-04	2.17E-04
	B	1.59E-02	0.0	0.0	0.0	0.0	0.0	0.0	0.0	0.0	0.0	0.0
	T	8.52E-02	3.52E-05	3.03E-04	1.70E-04	1.68E-04	7.08E-05	1.75E-03	6.84E-04	3.39E-04	3.39E-04	2.17E-04
BLAD WALL	G	2.99E-05	1.00E-02	6.96E-05	3.60E-04	2.94E-04	7.36E-04	6.40E-05	3.36E-05	1.24E-05	1.24E-05	2.50E-04
	B	0.0	5.55E-04	0.0	0.0	0.0	0.0	0.0	0.0	0.0	0.0	0.0
	T	2.99E-05	1.06E-02	6.96E-05	3.60E-04	2.94E-04	7.36E-04	6.40E-05	3.36E-05	1.24E-05	1.24E-05	2.50E-04
GI TRACT S WALL	G	4.19E-04	6.86E-05	7.26E-03	4.89E-04	5.06E-04	2.30E-04	4.69E-04	2.76E-04	2.70E-04	2.70E-04	2.00E-04
	B	0.0	0.0	4.44E-04	0.0	0.0	0.0	0.0	0.0	0.0	0.0	0.0
	T	4.19E-04	6.86E-05	7.70E-03	4.89E-04	5.06E-04	2.30E-04	4.69E-04	2.76E-04	2.70E-04	2.70E-04	2.00E-04
SI+CONT	G	1.36E-04	3.79E-04	3.61E-04	4.27E-03	2.24E-03	1.25E-03	3.91E-04	2.24E-04	4.45E-05	4.45E-05	2.18E-04
	B	0.0	0.0	0.0	2.78E-04	0.0	0.0	0.0	0.0	0.0	0.0	0.0
	T	1.36E-04	3.79E-04	3.61E-04	4.55E-03	2.24E-03	1.25E-03	3.91E-04	2.24E-04	4.45E-05	4.45E-05	2.18E-04
ULI WALL	G	1.59E-04	2.92E-04	4.35E-04	3.18E-03	6.06E-03	5.64E-04	4.03E-04	3.45E-04	5.81E-05	5.81E-05	2.31E-04
	B	0.0	0.0	0.0	0.0	5.05E-04	0.0	0.0	0.0	0.0	0.0	0.0
	T	1.59E-04	2.92E-04	4.35E-04	3.18E-03	6.57E-03	5.64E-04	4.03E-04	3.45E-04	5.81E-05	5.81E-05	2.31E-04
LLI WALL	G	4.03E-05	9.42E-04	1.91E-04	9.54E-04	4.55E-04	7.15E-03	1.24E-04	4.12E-05	1.30E-05	1.30E-05	2.39E-04
	B	0.0	0.0	0.0	0.0	0.0	8.23E-04	0.0	0.0	0.0	0.0	0.0
	T	4.03E-05	9.42E-04	1.91E-04	9.54E-04	4.55E-04	7.97E-03	1.24E-04	4.12E-05	1.30E-05	1.30E-05	2.39E-04
KIDNEYS	G	1.58E-03	5.22E-05	4.62E-04	4.48E-04	4.00E-04	1.28E-04	1.03E-02	5.21E-04	1.43E-04	1.43E-04	2.04E-04
	B	0.0	0.0	0.0	0.0	0.0	0.0	7.17E-04	0.0	0.0	0.0	0.0
	T	1.58E-03	5.22E-05	4.62E-04	4.48E-04	4.00E-04	1.28E-04	1.10E-02	5.21E-04	1.43E-04	1.43E-04	2.04E-04
LIVER	G	6.67E-04	4.29E-05	2.80E-04	2.62E-04	3.51E-04	5.38E-05	5.44E-04	3.59E-03	3.36E-04	3.36E-04	1.60E-04
	B	0.0	0.0	0.0	0.0	0.0	0.0	0.0	1.23E-04	0.0	0.0	0.0
	T	6.67E-04	4.29E-05	2.80E-04	2.62E-04	3.51E-04	5.38E-05	5.44E-04	3.71E-03	3.36E-04	3.36E-04	1.60E-04
LUNGS	G	3.33E-04	1.04E-05	2.54E-04	4.97E-05	5.61E-05	2.06E-05	1.41E-04	3.42E-04	2.07E-03	2.07E-03	1.89E-04
	B	0.0	0.0	0.0	0.0	0.0	0.0	0.0	0.0	2.22E-04	2.22E-04	0.0
	T	3.33E-04	1.04E-05	2.54E-04	4.97E-05	5.61E-05	2.06E-05	1.41E-04	3.42E-04	2.29E-03	2.29E-03	1.89E-04
RESP LYM NODE	G	3.33E-04	1.04E-05	2.54E-04	4.97E-05	5.61E-05	2.06E-05	1.41E-04	3.42E-04	2.04E-03	2.07E-03	1.89E-04
	B	0.0	0.0	0.0	0.0	0.0	0.0	0.0	0.0	9.83E-06	1.48E-02	0.0
	T	3.33E-04	1.04E-05	2.54E-04	4.97E-05	5.61E-05	2.06E-05	1.41E-04	3.42E-04	2.05E-03	1.69E-02	1.89E-04
MUSCLE*	G	2.17E-04	2.50E-04	2.00E-04	2.18E-04	2.09E-04	2.39E-04	2.04E-04	1.60E-04	1.89E-04	1.89E-04	2.18E-04
	B	0.0	0.0	0.0	0.0	0.0	0.0	0.0	0.0	0.0	0.0	7.94E-06
	T	2.17E-04	2.50E-04	2.00E-04	2.18E-04	2.09E-04	2.39E-04	2.04E-04	1.60E-04	1.89E-04	1.89E-04	2.26E-04
OVARIES	G	7.84E-05	6.93E-04	1.69E-04	1.39E-03	1.28E-03	2.34E-03	2.11E-04	8.03E-05	2.38E-05	2.38E-05	2.80E-04
	B	0.0	0.0	0.0	0.0	0.0	0.0	0.0	0.0	0.0	0.0	0.0
	T	7.84E-05	6.93E-04	1.69E-04	1.39E-03	1.28E-03	2.34E-03	2.11E-04	8.03E-05	2.38E-05	2.38E-05	2.80E-04

25-MANGANESE-54 CONTINUED

SOURCE ORGANS

TARGET ORGANS		ADRENALS	BLAD CON	S CONT	SI+CONT	ULI CONT	LLI CONT	KIDNEYS	LIVER	LUNG	RESP LYM NODE	MUSCLE*
PANCREAS	G	1.21E-03	4.12E-05	2.35E-03	2.88E-04	2.82E-04	1.06E-04	9.58E-04	6.21E-04	3.39E-04	3.39E-04	2.51E-04
	B	0.0	0.0	0.0	0.0	0.0	0.0	0.0	0.0	0.0	0.0	0.0
	T	1.21E-03	4.12E-05	2.35E-03	2.88E-04	2.82E-04	1.06E-04	9.58E-04	6.21E-04	3.39E-04	3.39E-04	2.51E-04
SKELETON BONE	G	1.91E-04	7.94E-05	8.34E-05	1.10E-04	9.84E-05	1.43E-04	1.36E-04	1.01E-04	1.39E-04	1.39E-04	1.59E-04
	B	0.0	0.0	0.0	0.0	0.0	0.0	0.0	0.0	0.0	0.0	0.0
	T	1.91E-04	7.94E-05	8.34E-05	1.10E-04	9.84E-05	1.43E-04	1.36E-04	1.01E-04	1.39E-04	1.39E-04	1.59E-04
R MARROW	G	3.39E-04	1.67E-04	1.42E-04	3.43E-04	2.88E-04	4.28E-04	3.43E-04	1.44E-04	1.76E-04	1.76E-04	1.89E-04
	B	0.0	0.0	0.0	0.0	0.0	0.0	0.0	0.0	0.0	0.0	0.0
	T	3.39E-04	1.67E-04	1.42E-04	3.43E-04	2.88E-04	4.28E-04	3.43E-04	1.44E-04	1.76E-04	1.76E-04	1.89E-04
Y MARROW	G	1.86E-04	7.34E-05	1.15E-04	1.52E-04	1.40E-04	1.76E-04	1.69E-04	1.50E-04	1.47E-04	1.47E-04	1.55E-04
	B	0.0	0.0	0.0	0.0	0.0	0.0	0.0	0.0	0.0	0.0	0.0
	T	1.86E-04	7.34E-05	1.15E-04	1.52E-04	1.40E-04	1.76E-04	1.69E-04	1.50E-04	1.47E-04	1.47E-04	1.55E-04
T E CL	G	1.91E-04	7.94E-05	8.34E-05	1.10E-04	9.84E-05	1.43E-04	1.36E-04	1.01E-04	1.39E-04	1.39E-04	1.59E-04
	B	0.0	0.0	0.0	0.0	0.0	0.0	0.0	0.0	0.0	0.0	0.0
	T	1.91E-04	7.94E-05	8.34E-05	1.10E-04	9.84E-05	1.43E-04	1.36E-04	1.01E-04	1.39E-04	1.39E-04	1.59E-04
SKIN	G	1.03E-04	9.88E-05	8.80E-05	8.11E-05	8.05E-05	8.72E-05	9.62E-05	8.88E-05	9.89E-05	9.89E-05	1.35E-04
	B	0.0	0.0	0.0	0.0	0.0	0.0	0.0	0.0	0.0	0.0	0.0
	T	1.03E-04	9.88E-05	8.80E-05	8.11E-05	8.05E-05	8.72E-05	9.62E-05	8.88E-05	9.89E-05	9.89E-05	1.35E-04
SPLEEN	G	8.71E-04	3.56E-05	1.33E-03	2.21E-04	1.89E-04	1.47E-04	1.17E-03	1.58E-04	3.08E-04	3.08E-04	2.09E-04
	B	0.0	0.0	0.0	0.0	0.0	0.0	0.0	0.0	0.0	0.0	0.0
	T	8.71E-04	3.56E-05	1.33E-03	2.21E-04	1.89E-04	1.47E-04	1.17E-03	1.58E-04	3.08E-04	3.08E-04	2.09E-04
TESTES	G	1.21E-05	6.96E-04	1.75E-05	6.88E-05	7.98E-05	2.40E-04	2.38E-05	3.06E-05	4.66E-06	4.66E-06	1.77E-04
	B	0.0	0.0	0.0	0.0	0.0	0.0	0.0	0.0	0.0	0.0	0.0
	T	1.21E-05	6.96E-04	1.75E-05	6.88E-05	7.98E-05	2.40E-04	2.38E-05	3.06E-05	4.66E-06	4.66E-06	1.77E-04
THYMUS	G	1.04E-04	5.95E-06	9.30E-05	2.22E-05	2.40E-05	1.00E-05	2.77E-05	1.38E-04	5.69E-04	5.69E-04	2.06E-04
	B	0.0	0.0	0.0	0.0	0.0	0.0	0.0	0.0	0.0	0.0	0.0
	T	1.04E-04	5.95E-06	9.30E-05	2.22E-05	2.40E-05	1.00E-05	2.77E-05	1.38E-04	5.69E-04	5.69E-04	2.06E-04
THYROID	G	3.06E-05	2.09E-06	2.40E-05	7.23E-06	7.67E-06	3.55E-06	1.57E-05	2.84E-05	1.92E-04	1.92E-04	1.95E-04
	B	0.0	0.0	0.0	0.0	0.0	0.0	0.0	0.0	0.0	0.0	0.0
	T	3.06E-05	2.09E-06	2.40E-05	7.23E-06	7.67E-06	3.55E-06	1.57E-05	2.84E-05	1.92E-04	1.92E-04	1.95E-04
UTERUS	G	6.71E-05	2.06E-03	1.35E-04	1.20E-03	6.53E-04	7.83E-04	1.20E-04	5.80E-05	1.62E-05	1.62E-05	3.47E-04
	B	0.0	0.0	0.0	0.0	0.0	0.0	0.0	0.0	0.0	0.0	0.0
	T	6.71E-05	2.06E-03	1.35E-04	1.20E-03	6.53E-04	7.83E-04	1.20E-04	5.80E-05	1.62E-05	1.62E-05	3.47E-04
T BODY	G	2.39E-04	2.63E-04	2.51E-04	2.75E-04	2.70E-04	2.67E-04	2.40E-04	2.41E-04	2.05E-04	2.05E-04	2.07E-04
	B	3.17E-06	3.57E-07	9.52E-07	2.54E-06	1.51E-06	1.88E-06	3.17E-06	3.17E-06	3.17E-06	3.17E-06	3.17E-06
	T	2.42E-04	2.63E-04	2.52E-04	2.78E-04	2.71E-04	2.69E-04	2.43E-04	2.44E-04	2.08E-04	2.08E-04	2.10E-04

CONTINUED NEXT PAGE

25-MANGANESE-54 CONTINUED

TARGET ORGANS		SOURCE ORGANS										
		OVARIES	PANCREAS	COR BONE	CAN BONE	R MARROW	Y MARROW	SKIN	SPLEEN	TESTES	THYROID	T BODY
ADRENALS	G	8.26E-05	1.02E-03	2.60E-04	2.60E-04	3.71E-04	9.92E-05	1.12E-04	9.65E-04	1.21E-05	3.06E-05	2.76E-04
	B	0.0	0.0	0.0	0.0	0.0	0.0	0.0	0.0	0.0	0.0	3.17E-06
	T	8.26E-05	1.02E-03	2.60E-04	2.60E-04	3.71E-04	9.92E-05	1.12E-04	9.65E-04	1.21E-05	3.06E-05	2.79E-04
BLAD WALL	G	9.76E-04	2.11E-05	7.15E-05	7.15E-05	1.41E-04	4.28E-05	1.06E-04	4.21E-05	7.43E-04	2.10E-06	2.83E-04
	B	0.0	0.0	0.0	0.0	0.0	0.0	0.0	0.0	0.0	0.0	3.17E-06
	T	9.76E-04	2.11E-05	7.15E-05	7.15E-05	1.41E-04	4.28E-05	1.06E-04	4.21E-05	7.43E-04	2.10E-06	2.86E-04
GI TRACT S WALL	G	1.12E-04	2.37E-03	7.90E-05	7.90E-05	1.62E-04	1.08E-04	9.54E-05	1.32E-03	1.35E-05	1.95E-05	2.44E-04
	B	0.0	0.0	0.0	0.0	0.0	0.0	0.0	0.0	0.0	0.0	3.17E-06
	T	1.12E-04	2.37E-03	7.90E-05	7.90E-05	1.62E-04	1.08E-04	9.54E-05	1.32E-03	1.35E-05	1.95E-05	2.48E-04
SI+CONT	G	1.59E-03	2.54E-04	1.19E-04	1.19E-04	3.71E-04	1.46E-04	8.43E-05	1.98E-04	7.70E-05	4.29E-06	2.77E-04
	B	0.0	0.0	0.0	0.0	0.0	0.0	0.0	0.0	0.0	0.0	3.17E-06
	T	1.59E-03	2.54E-04	1.19E-04	1.19E-04	3.71E-04	1.46E-04	8.43E-05	1.98E-04	7.70E-05	4.29E-06	2.81E-04
ULI WALL	G	1.50E-03	3.10E-04	1.09E-04	1.09E-04	2.74E-04	1.22E-04	9.25E-05	1.99E-04	5.55E-05	4.84E-06	2.68E-04
	B	0.0	0.0	0.0	0.0	0.0	0.0	0.0	0.0	0.0	0.0	3.17E-06
	T	1.50E-03	3.10E-04	1.09E-04	1.09E-04	2.74E-04	1.22E-04	9.25E-05	1.99E-04	5.55E-05	4.84E-06	2.71E-04
LLI WALL	G	1.90E-03	7.90E-05	1.48E-04	1.48E-04	4.25E-04	1.15E-04	9.36E-05	9.29E-05	3.46E-04	3.05E-06	2.80E-04
	B	0.0	0.0	0.0	0.0	0.0	0.0	0.0	0.0	0.0	0.0	3.17E-06
	T	1.90E-03	7.90E-05	1.48E-04	1.48E-04	4.25E-04	1.15E-04	9.36E-05	9.29E-05	3.46E-04	3.05E-06	2.83E-04
KIDNEYS	G	1.59E-04	8.57E-04	1.59E-04	1.59E-04	3.35E-04	1.69E-04	1.11E-04	1.15E-03	1.95E-05	1.42E-05	2.56E-04
	B	0.0	0.0	0.0	0.0	0.0	0.0	0.0	0.0	0.0	0.0	3.17E-06
	T	1.59E-04	8.57E-04	1.59E-04	1.59E-04	3.35E-04	1.69E-04	1.11E-04	1.15E-03	1.95E-05	1.42E-05	2.59E-04
LIVER	G	9.19E-05	5.68E-04	1.03E-04	1.03E-04	1.43E-04	1.58E-04	9.72E-05	1.53E-04	1.28E-05	2.64E-05	2.55E-04
	B	0.0	0.0	0.0	0.0	0.0	0.0	0.0	0.0	0.0	0.0	3.17E-06
	T	9.19E-05	5.68E-04	1.03E-04	1.03E-04	1.43E-04	1.58E-04	9.72E-05	1.53E-04	1.28E-05	2.64E-05	2.58E-04
LUNGS	G	2.09E-05	3.28E-04	1.42E-04	1.42E-04	1.73E-04	1.46E-04	1.01E-04	3.03E-04	3.58E-06	1.61E-04	2.07E-04
	B	0.0	0.0	0.0	0.0	0.0	0.0	0.0	0.0	0.0	0.0	3.17E-06
	T	2.09E-05	3.28E-04	1.42E-04	1.42E-04	1.73E-04	1.46E-04	1.01E-04	3.03E-04	3.58E-06	1.61E-04	2.11E-04
RESP LYM NODE	G	2.09E-05	3.28E-04	1.42E-04	1.42E-04	1.73E-04	1.46E-04	1.01E-04	3.03E-04	3.58E-06	1.61E-04	2.07E-04
	B	0.0	0.0	0.0	0.0	0.0	0.0	0.0	0.0	0.0	0.0	3.17E-06
	T	2.09E-05	3.28E-04	1.42E-04	1.42E-04	1.73E-04	1.46E-04	1.01E-04	3.03E-04	3.58E-06	1.61E-04	2.11E-04
MUSCLE*	G	2.80E-04	2.51E-04	1.59E-04	1.59E-04	1.86E-04	1.47E-04	1.35E-04	2.09E-04	1.77E-04	1.95E-04	2.07E-04
	B	0.0	0.0	0.0	0.0	0.0	0.0	0.0	0.0	0.0	0.0	3.17E-06
	T	2.80E-04	2.51E-04	1.59E-04	1.59E-04	1.86E-04	1.47E-04	1.35E-04	2.09E-04	1.77E-04	1.95E-04	2.10E-04
OVARIES	G	1.13E-01	1.18E-04	1.43E-04	1.43E-04	4.17E-04	1.29E-04	7.48E-05	1.01E-04	1.36E-45	3.63E-06	2.03E-04
	B	2.02E-02	0.0	0.0	0.0	0.0	0.0	0.0	0.0	0.0	0.0	3.17E-06
	T	1.33E-01	1.18E-04	1.43E-04	1.43E-04	4.17E-04	1.29E-04	7.48E-05	1.01E-04	1.36E-45	3.63E-06	2.07E-04

25-MANGANESE-54 CONTINUED

TARGET ORGANS		SOURCE ORGANS										
		OVARIES	PANCREAS	COR BONE	CAN BONE	R MARROW	Y MARROW	SKIN	SPLEEN	TESTES	THYROID	T BODY
PANCREAS	G	1.18E-04	3.06E-02	1.38E-04	1.38E-04	1.89E-04	1.58E-04	7.50E-05	2.60E-03	1.21E-05	8.68E-06	2.36E-04
	B	0.0	2.22E-03	0.0	0.0	0.0	0.0	0.0	0.0	0.0	0.0	3.17E-06
	T	1.18E-04	3.28E-02	1.38E-04	1.38E-04	1.89E-04	1.58E-04	7.50E-05	2.60E-03	1.21E-05	8.68E-06	2.40E-04
SKELETON BONE	G	1.27E-04	1.26E-04	4.92E-04	4.92E-04	3.25E-04	3.63E-04	1.23E-04	1.08E-04	9.37E-05	1.05E-04	2.07E-04
	B	0.0	0.0	4.44E-05	4.33E-05	7.68E-07	0.0	0.0	0.0	0.0	0.0	3.17E-06
	T	1.27E-04	1.26E-04	5.36E-04	5.35E-04	3.26E-04	3.63E-04	1.23E-04	1.08E-04	9.37E-05	1.05E-04	2.11E-04
R MARROW	G	4.17E-04	2.37E-04	4.41E-04	4.41E-04	1.05E-03	3.76E-04	1.14E-04	1.59E-04	7.39E-05	1.14E-04	2.29E-04
	B	0.0	0.0	1.56E-07	3.84E-06	1.46E-04	0.0	0.0	0.0	0.0	0.0	3.17E-06
	T	4.17E-04	2.37E-04	4.41E-04	4.45E-04	1.20E-03	3.76E-04	1.14E-04	1.59E-04	7.39E-05	1.14E-04	2.32E-04
Y MARROW	G	1.69E-04	1.49E-04	4.23E-04	4.23E-04	4.02E-04	6.37E-04	1.30E-04	1.62E-04	4.07E-05	5.65E-05	1.95E-04
	B	0.0	0.0	0.0	0.0	0.0	1.48E-04	0.0	0.0	0.0	0.0	3.17E-06
	T	1.69E-04	1.49E-04	4.23E-04	4.23E-04	4.02E-04	7.85E-04	1.30E-04	1.62E-04	4.07E-05	5.65E-05	1.98E-04
T E CL	G	1.27E-04	1.26E-04	4.89E-04	4.89E-04	4.47E-04	4.11E-04	1.23E-04	1.08E-04	9.37E-05	1.05E-04	2.08E-04
	B	0.0	0.0	2.89E-06	5.24E-06	7.06E-05	3.70E-05	0.0	0.0	0.0	0.0	3.17E-06
	T	1.27E-04	1.26E-04	4.92E-04	4.94E-04	5.18E-04	4.48E-04	1.23E-04	1.08E-04	9.37E-05	1.05E-04	2.11E-04
SKIN	G	7.99E-05	7.89E-05	1.24E-04	1.24E-04	1.08E-04	1.38E-04	3.14E-04	9.27E-05	2.25E-04	1.30E-04	1.34E-04
	B	0.0	0.0	0.0	0.0	0.0	0.0	8.55E-05	0.0	0.0	0.0	3.17E-06
	T	7.99E-05	7.89E-05	1.24E-04	1.24E-04	1.08E-04	1.38E-04	4.00E-04	9.27E-05	2.25E-04	1.30E-04	1.38E-04
SPLEEN	G	9.25E-05	2.58E-03	1.26E-04	1.26E-04	1.41E-04	1.54E-04	1.08E-04	1.84E-02	1.25E-05	2.68E-05	2.52E-04
	B	0.0	0.0	0.0	0.0	0.0	0.0	0.0	1.23E-03	0.0	0.0	3.17E-06
	T	9.25E-05	2.58E-03	1.26E-04	1.26E-04	1.41E-04	1.54E-04	1.08E-04	1.97E-02	1.25E-05	2.68E-05	2.55E-04
TESTES	G	1.36E-45	1.53E-05	9.19E-05	9.19E-05	6.28E-05	1.34E-04	1.29E-04	1.58E-05	5.21E-02	8.68E-07	2.56E-04
	B	0.0	0.0	0.0	0.0	0.0	0.0	0.0	0.0	6.35E-03	0.0	3.17E-06
	T	1.36E-45	1.53E-05	9.19E-05	9.19E-05	6.28E-05	1.34E-04	1.29E-04	1.58E-05	5.85E-02	8.68E-07	2.59E-04
THYMUS	G	1.06E-05	7.60E-05	1.18E-04	1.18E-04	8.63E-05	5.82E-05	1.12E-04	9.23E-05	2.38E-06	5.66E-04	1.92E-04
	B	0.0	0.0	0.0	0.0	0.0	0.0	0.0	0.0	0.0	0.0	3.17E-06
	T	1.06E-05	7.60E-05	1.18E-04	1.18E-04	8.63E-05	5.82E-05	1.12E-04	9.23E-05	2.38E-06	5.66E-04	1.95E-04
THYROID	G	3.62E-06	1.18E-05	1.00E-04	1.00E-04	1.36E-04	7.10E-05	1.09E-04	2.34E-05	8.68E-07	7.06E-02	2.20E-04
	B	0.0	0.0	0.0	0.0	0.0	0.0	0.0	0.0	0.0	1.11E-02	3.17E-06
	T	3.62E-06	1.18E-05	1.00E-04	1.00E-04	1.36E-04	7.10E-05	1.09E-04	2.34E-05	8.68E-07	8.17E-02	2.24E-04
UTERUS	G	2.39E-03	8.80E-05	1.18E-04	1.18E-04	2.40E-04	9.72E-05	1.01E-04	8.29E-05	1.36E-45	3.46E-06	3.14E-04
	B	0.0	0.0	0.0	0.0	0.0	0.0	0.0	0.0	0.0	0.0	3.17E-06
	T	2.39E-03	8.80E-05	1.18E-04	1.18E-04	2.40E-04	9.72E-05	1.01E-04	8.29E-05	1.36E-45	3.46E-06	3.18E-04
T BODY	G	2.80E-04	2.74E-04	2.05E-04	2.05E-04	2.26E-04	1.83E-04	1.35E-04	2.39E-04	2.04E-04	1.86E-04	2.06E-04
	B	3.17E-06	3.17E-06	3.17E-06	3.17E-06	3.17E-06	3.17E-06	3.17E-06	3.17E-06	3.17E-06	3.17E-06	3.17E-06
	T	2.83E-04	2.77E-04	2.08E-04	2.08E-04	2.30E-04	1.86E-04	1.39E-04	2.42E-04	2.07E-04	1.89E-04	2.09E-04

*"MUSCLE" VALUES MAY BE USED FOR "SEPARABLE FAT" WITH ADJUSTMENT (SEE TEXT)
PRINCIPLE REFERENCE-NUCLEAR DATA, VOLUME 3, NOS. 5, 6, APRIL (1970)
DATE DECAY DATA REVIEWED-FEBRUARY 1972

S, AVERAGE DOSE EQUIVALENT PER UNIT ACCUMULATED ACTIVITY (REM/UCI-DAY), FOR 26-IRON-55 (TR=2.700E 00 YEARS)

DATE OF TABLE 11-27-74

TARGET ORGANS		SOURCE ORGANS										
		ADRENALS	BLAD CON	S CONT	SI+CONT	ULI CONT	LLI CONT	KIDNEYS	LIVER	LUNG	RESP LYM NODE	MUSCLE*
ADRENALS	G	4.53E-03	1.27E-26	2.04E-12	1.02E-15	2.72E-16	9.26E-19	2.22E-07	1.16E-07	5.86E-08	5.86E-08	1.90E-07
	B	1.60E-02	0.0	0.0	0.0	0.0	0.0	0.0	0.0	0.0	0.0	0.0
	T	2.06E-02	1.27E-26	2.04E-12	1.02E-15	2.72E-16	9.26E-19	2.22E-07	1.16E-07	5.86E-08	5.86E-08	1.90E-07
BLAD WALL	G	3.07E-26	4.01E-05	7.60E-20	1.99E-11	1.57E-11	6.55E-09	2.17E-20	2.72E-20	1.67E-29	1.67E-29	9.47E-09
	B	0.0	5.61E-04	0.0	0.0	0.0	0.0	0.0	0.0	0.0	0.0	0.0
	T	3.07E-26	6.01E-04	7.60E-20	1.99E-11	1.57E-11	6.55E-09	2.17E-20	2.72E-20	1.67E-29	1.67E-29	9.47E-09
GI TRACT S WALL	G	6.62E-12	1.34E-19	1.52E-05	2.69E-08	9.96E-08	5.91E-10	6.40E-11	1.82E-08	2.54E-08	2.54E-08	1.88E-09
	B	0.0	0.0	4.49E-04	0.0	0.0	0.0	0.0	0.0	0.0	0.0	0.0
	T	6.62E-12	1.34E-19	4.64E-04	2.69E-08	9.96E-08	5.91E-10	6.40E-11	1.82E-08	2.54E-08	2.54E-08	1.88E-09
SI+CONT	G	1.02E-15	7.18E-12	9.42E-09	3.50E-05	2.58E-07	1.15E-07	3.08E-10	7.67E-09	7.79E-19	7.79E-19	3.29E-08
	B	0.0	0.0	0.0	2.80E-04	0.0	0.0	0.0	0.0	0.0	0.0	0.0
	T	1.02E-15	7.18E-12	9.42E-09	3.15E-04	2.58E-07	1.15E-07	3.08E-10	7.67E-09	7.79E-19	7.79E-19	3.29E-08
ULI WALL	G	5.43E-16	8.09E-12	3.82E-08	2.13E-05	1.72E-05	4.86E-07	3.53E-11	8.94E-09	1.20E-18	1.20E-18	2.07E-07
	B	0.0	0.0	0.0	0.0	5.10E-04	0.0	0.0	0.0	0.0	0.0	0.0
	T	5.43E-16	8.09E-12	3.82E-08	2.13E-05	5.27E-04	4.86E-07	3.53E-11	8.94E-09	1.20E-18	1.20E-18	2.07E-07
LLI WALL	G	9.51E-19	1.61E-08	8.08E-11	1.33E-06	1.17E-07	2.62E-05	3.92E-13	1.29E-18	2.96E-21	2.96E-21	3.21E-09
	B	0.0	0.0	0.0	0.0	0.0	8.31E-04	0.0	0.0	0.0	0.0	0.0
	T	9.51E-19	1.61E-08	8.08E-11	1.33E-06	1.17E-07	8.57E-04	3.92E-13	1.29E-18	2.96E-21	2.96E-21	3.21E-09
KIDNEYS	G	2.00E-07	7.17E-21	1.81E-11	2.33E-10	1.50E-11	2.00E-13	2.68E-04	3.97E-08	3.04E-12	3.04E-12	6.72E-08
	B	0.0	0.0	0.0	0.0	0.0	0.0	7.24E-04	0.0	0.0	0.0	0.0
	T	2.00E-07	7.17E-21	1.81E-11	2.33E-10	1.50E-11	2.00E-13	9.92E-04	3.97E-08	3.04E-12	3.04E-12	6.72E-08
LIVER	G	1.29E-08	1.23E-20	1.01E-08	3.59E-09	7.48E-09	1.38E-18	2.10E-08	4.31E-05	3.39E-09	3.39E-09	2.91E-08
	B	0.0	0.0	0.0	0.0	0.0	0.0	0.0	1.25E-04	0.0	0.0	0.0
	T	1.29E-08	1.23E-20	1.01E-08	3.59E-09	7.48E-09	1.38E-18	2.10E-08	1.68E-04	3.39E-09	3.39E-09	2.91E-08
LUNGS	G	1.51E-08	2.01E-30	8.33E-09	2.10E-19	1.87E-19	1.24E-18	1.69E-09	3.67E-09	7.07E-05	7.07E-05	1.84E-07
	B	0.0	0.0	0.0	0.0	0.0	0.0	0.0	0.0	2.24E-04	2.24E-04	0.0
	T	1.51E-08	2.01E-30	8.33E-09	2.10E-19	1.87E-19	1.24E-18	1.69E-09	3.67E-09	2.95E-04	2.95E-04	1.84E-07
RESP LYM NODE	G	1.51E-08	2.01E-30	8.33E-09	2.10E-19	1.87E-19	1.24E-18	1.69E-09	3.67E-09	3.86E-05	7.07E-05	1.84E-07
	B	0.0	0.0	0.0	0.0	0.0	0.0	0.0	0.0	0.0	1.50E-02	0.0
	T	1.51E-08	2.01E-30	8.33E-09	2.10E-19	1.87E-19	1.24E-18	1.69E-09	3.67E-09	3.86E-05	1.50E-02	1.84E-07
MUSCLE*	G	1.90E-07	9.47E-09	1.88E-09	3.29E-08	3.51E-09	3.21E-09	6.72E-08	2.91E-08	1.84E-07	1.84E-07	1.52E-06
	B	0.0	0.0	0.0	0.0	0.0	0.0	0.0	0.0	0.0	0.0	8.01E-06
	T	1.90E-07	9.47E-09	1.88E-09	3.29E-08	3.51E-09	3.21E-09	6.72E-08	2.91E-08	1.84E-07	1.84E-07	9.53E-06
OVARIES	G	9.36E-22	2.95E-10	9.39E-16	6.51E-07	9.50E-07	1.94E-06	1.74E-15	4.64E-16	2.48E-25	2.48E-25	1.94E-07
	B	0.0	0.0	0.0	0.0	0.0	0.0	0.0	0.0	0.0	0.0	0.0
	T	9.36E-22	2.95E-10	9.39E-16	6.51E-07	9.50E-07	1.94E-06	1.74E-15	4.64E-16	2.48E-25	2.48E-25	1.94E-07

26-IRON-55 CONTINUED

TARGET ORGANS		SOURCE ORGANS										
		ADRENALS	BLAD CON	S CONT	SI+CONT	ULI CONT	LLI CONT	KIDNEYS	LIVER	LUNG	RESP LYM NODE	MUSCLE*
PANCREAS	G	1.43E-09	1.72E-23	3.92E-07	1.25E-12	1.07E-12	8.09E-16	1.10E-09	6.96E-08	4.03E-10	4.03E-10	1.14E-07
	B	0.0	0.0	0.0	0.0	0.0	0.0	0.0	0.0	0.0	0.0	0.0
	T	1.43E-09	1.72E-23	3.92E-07	1.25E-12	1.07E-12	8.09E-16	1.10E-09	6.96E-08	4.03E-10	4.03E-10	1.14E-07
SKELETON BONE	G	2.08E-08	1.21E-12	1.82E-09	1.01E-08	7.77E-09	2.03E-09	1.06E-08	2.75E-09	1.28E-09	1.28E-09	1.82E-08
	B	0.0	0.0	0.0	0.0	0.0	0.0	0.0	0.0	0.0	0.0	0.0
	T	2.08E-08	1.21E-12	1.82E-09	1.01E-08	7.77E-09	2.03E-09	1.06E-08	2.75E-09	1.28E-09	1.28E-09	1.82E-08
R MARROW	G	3.12E-08	1.34E-09	1.89E-09	4.27E-08	3.27E-08	8.55E-09	2.83E-08	2.85E-09	1.33E-09	1.33E-09	9.51E-08
	B	0.0	0.0	0.0	0.0	0.0	0.0	0.0	0.0	0.0	0.0	0.0
	T	3.12E-08	1.34E-09	1.89E-09	4.27E-08	3.27E-08	8.55E-09	2.83E-08	2.85E-09	1.33E-09	1.33E-09	9.51E-08
Y MARROW	G	1.90E-08	4.47E-10	2.48E-09	1.42E-08	1.09E-08	2.85E-09	1.28E-08	3.75E-09	1.74E-09	1.74E-09	7.96E-08
	B	0.0	0.0	0.0	0.0	0.0	0.0	0.0	0.0	0.0	0.0	0.0
	T	1.90E-08	4.47E-10	2.48E-09	1.42E-08	1.09E-08	2.85E-09	1.28E-08	3.75E-09	1.74E-09	1.74E-09	7.96E-08
T E CL	G	2.08E-08	1.21E-12	1.82E-09	1.01E-08	7.77E-09	2.03E-09	1.06E-08	2.75E-09	1.28E-09	1.28E-09	1.82E-08
	B	0.0	0.0	0.0	0.0	0.0	0.0	0.0	0.0	0.0	0.0	0.0
	T	2.08E-08	1.21E-12	1.82E-09	1.01E-08	7.77E-09	2.03E-09	1.06E-08	2.75E-09	1.28E-09	1.28E-09	1.82E-08
SKIN	G	3.08E-09	1.26E-09	6.53E-10	2.51E-09	4.01E-11	3.83E-09	7.86E-09	2.72E-09	2.22E-09	2.22E-09	1.89E-07
	B	0.0	0.0	0.0	0.0	0.0	0.0	0.0	0.0	0.0	0.0	0.0
	T	3.08E-09	1.26E-09	6.53E-10	2.51E-09	4.01E-11	3.83E-09	7.86E-09	2.72E-09	2.22E-09	2.22E-09	1.89E-07
SPLEEN	G	1.97E-08	1.24E-23	5.32E-09	1.00E-11	2.73E-12	7.21E-14	2.92E-07	3.43E-14	3.13E-08	3.13E-08	5.56E-08
	B	0.0	0.0	0.0	0.0	0.0	0.0	0.0	0.0	0.0	0.0	0.0
	T	1.97E-08	1.24E-23	5.32E-09	1.00E-11	2.73E-12	7.21E-14	2.92E-07	3.43E-14	3.13E-08	3.13E-08	5.56E-08
TESTES	G	3.35E-34	8.46E-11	1.62E-27	1.30E-19	5.84E-19	2.21E-11	2.07E-28	1.03E-27	4.02E-37	4.02E-37	2.36E-09
	B	0.0	0.0	0.0	0.0	0.0	0.0	0.0	0.0	0.0	0.0	0.0
	T	3.35E-34	8.46E-11	1.62E-27	1.30E-19	5.84E-19	2.21E-11	2.07E-28	1.03E-27	4.02E-37	4.02E-37	2.36E-09
THYMUS	G	4.61E-20	2.79E-38	1.04E-19	4.97E-28	6.36E-28	4.81E-31	3.34E-23	2.98E-17	1.05E-08	1.05E-08	8.25E-07
	B	0.0	0.0	0.0	0.0	0.0	0.0	0.0	0.0	0.0	0.0	0.0
	T	4.61E-20	2.79E-38	1.04E-19	4.97E-28	6.36E-28	4.81E-31	3.34E-23	2.98E-17	1.05E-08	1.05E-08	8.25E-07
THYROID	G	1.00E-27	2.93E-26	2.68E-27	2.05E-36	2.49E-36	4.99E-39	3.85E-31	6.11E-26	1.91E-13	1.91E-13	1.58E-07
	B	0.0	0.0	0.0	0.0	0.0	0.0	0.0	0.0	0.0	0.0	0.0
	T	1.00E-27	2.93E-26	2.68E-27	2.05E-36	2.49E-36	4.99E-39	3.85E-31	6.11E-26	1.91E-13	1.91E-13	1.58E-07
UTERUS	G	9.24E-23	1.84E-07	3.55E-17	6.45E-08	2.02E-10	2.42E-10	6.91E-17	8.26E-18	1.80E-26	1.80E-26	9.54E-07
	B	0.0	0.0	0.0	0.0	0.0	0.0	0.0	0.0	0.0	0.0	0.0
	T	9.24E-23	1.84E-07	3.55E-17	6.45E-08	2.02E-10	2.42E-10	6.91E-17	8.26E-18	1.80E-26	1.80E-26	9.54E-07
T BODY	G	1.13E-06	1.13E-06	1.13E-06	1.13E-06	1.13E-06	1.13E-06	1.13E-06	1.13E-06	1.13E-06	1.13E-06	1.14E-06
	B	3.20E-06	3.61E-07	9.61E-07	2.56E-06	1.53E-06	1.90E-06	3.20E-06	3.20E-06	3.20E-06	3.20E-06	3.20E-06
	T	4.34E-06	1.50E-06	2.10E-06	3.70E-06	2.66E-06	3.03E-06	4.34E-06	4.34E-06	4.34E-06	4.34E-06	4.34E-06

CONTINUED NEXT PAGE

26-IRON-55 CONTINUED

SOURCE ORGANS

TARGET ORGANS		OVARIES	PANCREAS	COR BONE	CAN BONE	R MARROW	Y MARROW	SKIN	SPLEEN	TESTES	THYROID	T BODY
ADRENALS	G	9.36E-22	1.43E-09	1.92E-08	1.92E-08	2.78E-08	7.46E-09	4.96E-09	5.23E-09	3.35E-34	1.00E-28	1.24E-06
	B	0.0	0.0	0.0	0.0	0.0	0.0	0.0	0.0	0.0	0.0	3.20E-06
	T	9.36E-22	1.43E-09	1.92E-08	1.92E-08	2.78E-08	7.46E-09	4.96E-09	5.23E-09	3.35E-34	1.00E-28	4.44E-06
BLAD WALL	G	8.46E-10	4.40E-23	1.07E-12	1.07E-12	4.38E-12	8.58E-13	1.01E-08	3.17E-23	2.36E-10	4.15E-26	1.01E-06
	B	0.0	0.0	0.0	0.0	0.0	0.0	0.0	0.0	0.0	0.0	3.20E-06
	T	8.46E-10	4.40E-23	1.07E-12	1.07E-12	4.38E-12	8.58E-13	1.01E-08	3.17E-23	2.36E-10	4.15E-26	4.21E-06
GI TRACT S WALL	G	3.82E-15	1.07E-07	6.86E-09	6.86E-09	7.01E-09	1.31E-08	1.29E-08	4.08E-08	6.56E-27	9.79E-27	1.11E-06
	B	0.0	0.0	0.0	0.0	0.0	0.0	0.0	0.0	0.0	0.0	3.20E-06
	T	3.82E-15	1.07E-07	6.86E-09	6.86E-09	7.01E-09	1.31E-08	1.29E-08	4.08E-08	6.56E-27	9.79E-27	4.31E-06
SI+CONT	G	1.36E-07	1.23E-12	7.20E-09	7.20E-09	1.53E-08	7.70E-09	3.05E-09	8.35E-12	1.26E-19	2.16E-36	1.14E-06
	B	0.0	0.0	0.0	0.0	0.0	0.0	0.0	0.0	0.0	0.0	3.20E-06
	T	1.36E-07	1.23E-12	7.20E-09	7.20E-09	1.53E-08	7.70E-09	3.05E-09	8.35E-12	1.26E-19	2.16E-36	4.34E-06
ULI WALL	G	4.23E-07	1.84E-12	1.00E-08	1.00E-08	3.20E-08	9.81E-09	5.95E-09	5.57E-12	6.39E-19	4.41E-36	1.15E-06
	B	0.0	0.0	0.0	0.0	0.0	0.0	0.0	0.0	0.0	0.0	3.20E-06
	T	4.23E-07	1.84E-12	1.00E-08	1.00E-08	3.20E-08	9.81E-09	5.95E-09	5.57E-12	6.39E-19	4.41E-36	4.36E-06
LLI WALL	G	4.70E-07	6.67E-16	3.06E-08	3.06E-08	7.20E-08	2.16E-08	2.71E-09	8.60E-14	6.14E-11	3.94E-39	1.15E-06
	B	0.0	0.0	0.0	0.0	0.0	0.0	0.0	0.0	0.0	0.0	3.20E-06
	T	4.70E-07	6.67E-16	3.06E-08	3.06E-08	7.20E-08	2.16E-08	2.71E-09	8.60E-14	6.14E-11	3.94E-39	4.35E-06
KIDNEYS	G	1.75E-15	1.07E-09	1.43E-08	1.43E-08	1.17E-08	2.22E-08	8.58E-09	3.32E-07	2.21E-28	4.19E-31	1.12E-06
	B	0.0	0.0	0.0	0.0	0.0	0.0	0.0	0.0	0.0	0.0	3.20E-06
	T	1.75E-15	1.07E-09	1.43E-08	1.43E-08	1.17E-08	2.22E-08	8.58E-09	3.32E-07	2.21E-28	4.19E-31	4.32E-06
LIVER	G	4.98E-16	7.26E-09	5.88E-09	5.88E-09	4.09E-09	8.16E-09	2.25E-09	3.40E-14	1.22E-27	5.98E-26	1.14E-06
	B	0.0	0.0	0.0	0.0	0.0	0.0	0.0	0.0	0.0	0.0	3.20E-06
	T	4.98E-16	7.26E-09	5.88E-09	5.88E-09	4.09E-09	8.16E-09	2.25E-09	3.40E-14	1.22E-27	5.98E-26	4.34E-06
LUNGS	G	2.42E-27	1.30E-10	7.99E-09	7.99E-09	7.42E-09	6.51E-09	3.80E-09	3.07E-08	1.06E-37	7.20E-15	1.08E-06
	B	0.0	0.0	0.0	0.0	0.0	0.0	0.0	0.0	0.0	0.0	3.20E-06
	T	2.42E-27	1.30E-10	7.99E-09	7.99E-09	7.42E-09	6.51E-09	3.80E-09	3.07E-08	1.06E-37	7.20E-15	4.29E-06
RESP LYM NODE	G	2.42E-27	1.30E-10	7.99E-09	7.99E-09	7.42E-09	6.51E-09	3.80E-09	3.07E-08	1.06E-37	7.20E-15	1.08E-06
	B	0.0	0.0	0.0	0.0	0.0	0.0	0.0	0.0	0.0	0.0	3.20E-06
	T	2.42E-27	1.30E-10	7.99E-09	7.99E-09	7.42E-09	6.51E-09	3.80E-09	3.07E-08	1.06E-37	7.20E-15	4.29E-06
MUSCLE*	G	1.94E-07	1.14E-07	1.82E-08	1.82E-08	2.49E-08	5.22E-08	1.89E-07	5.56E-08	2.36E-09	1.58E-07	1.14E-06
	B	0.0	0.0	0.0	0.0	0.0	0.0	0.0	0.0	0.0	0.0	3.20E-06
	T	1.94E-07	1.14E-07	1.82E-08	1.82E-08	2.49E-08	5.22E-08	1.89E-07	5.56E-08	2.36E-09	1.58E-07	4.34E-06
OVARIES	G	8.45E-03	2.49E-19	1.00E-09	1.00E-09	4.06E-09	1.10E-09	4.07E-13	4.64E-18	1.76E-45	1.10E-24	1.24E-06
	B	2.04E-02	0.0	0.0	0.0	0.0	0.0	0.0	0.0	0.0	0.0	3.20E-06
	T	2.88E-02	2.49E-19	1.00E-09	1.00E-09	4.06E-09	1.10E-09	4.07E-13	4.64E-18	1.76E-45	1.10E-24	4.45E-06

26-IRON-55 CONTINUED

TARGET ORGANS		SOURCE ORGANS										
		OVARIES	PANCREAS	COR BONE	CAN BONE	R MARROW	Y MARROW	SKIN	SPLEEN	TESTES	THYROID	T BODY
PANCREAS	G	2.24E-19	1.23E-03	1.85E-08	1.85E-08	2.18E-09	5.29E-09	6.69E-10	7.39E-08	4.56E-31	5.87E-28	1.16E-06
	B	0.0	2.24E-03	0.0	0.0	0.0	0.0	0.0	0.0	0.0	0.0	3.20E-06
	T	2.24E-19	3.47E-03	1.85E-08	1.85E-08	2.18E-09	5.29E-09	6.69E-10	7.39E-08	4.56E-31	5.87E-28	4.37E-06
SKELETON BONE	G	1.28E-09	1.78E-09	7.47E-06	7.47E-06	2.87E-06	3.71E-06	8.73E-08	3.23E-10	3.46E-12	8.46E-11	5.30E-07
	B	0.0	0.0	4.49E-05	4.45E-05	2.27E-07	0.0	0.0	0.0	0.0	0.0	3.20E-06
	T	1.28E-09	1.78E-09	5.23E-05	5.20E-05	3.10E-06	3.71E-06	8.73E-08	3.23E-10	3.46E-12	8.46E-11	3.73E-06
R MARROW	G	5.38E-09	3.71E-09	4.45E-06	4.45E-06	3.33E-05	3.96E-06	7.63E-08	3.34E-10	1.53E-10	1.27E-10	1.20E-06
	B	0.0	0.0	8.90E-09	1.14E-06	1.49E-04	0.0	0.0	0.0	0.0	0.0	3.20E-06
	T	5.38E-09	3.71E-09	4.46E-06	5.59E-06	1.82E-04	3.96E-06	7.63E-08	3.34E-10	1.53E-10	1.27E-10	4.40E-06
Y MARROW	G	1.79E-09	1.51E-09	4.42E-06	4.42E-06	4.40E-06	2.87E-05	1.03E-07	4.39E-10	5.26E-11	5.30E-11	1.18E-06
	B	0.0	0.0	0.0	0.0	0.0	1.50E-04	0.0	0.0	0.0	0.0	3.20E-06
	T	1.79E-09	1.51E-09	4.42E-06	4.42E-06	4.40E-06	1.78E-04	1.03E-07	4.39E-10	5.26E-11	5.30E-11	4.39E-06
T E CL	G	1.28E-09	1.78E-09	4.42E-06	4.42E-06	1.51E-05	1.49E-05	8.73E-08	3.23E-10	3.46E-12	8.46E-11	1.17E-06
	B	0.0	0.0	1.89E-06	3.95E-06	7.21E-05	3.74E-05	0.0	0.0	0.0	0.0	3.20E-06
	T	1.28E-09	1.78E-09	6.31E-06	8.37E-06	8.72E-05	5.23E-05	8.73E-08	3.23E-10	3.46E-12	8.46E-11	4.38E-06
SKIN	G	4.07E-13	3.47E-10	2.34E-08	2.34E-08	2.34E-08	3.55E-08	2.12E-05	3.69E-10	6.97E-08	2.39E-08	9.96E-07
	B	0.0	0.0	0.0	0.0	0.0	0.0	8.63E-05	0.0	0.0	0.0	3.20E-06
	T	4.07E-13	3.47E-10	2.34E-08	2.34E-08	2.34E-08	3.55E-08	1.07E-04	3.69E-10	6.97E-08	2.39E-08	4.20E-06
SPLEEN	G	4.81E-18	6.85E-08	3.08E-08	3.08E-08	7.39E-09	9.34E-09	7.89E-09	4.42E-04	6.20E-31	3.22E-28	1.26E-06
	B	0.0	0.0	0.0	0.0	0.0	0.0	0.0	1.25E-03	0.0	0.0	3.20E-06
	T	4.81E-18	6.85E-08	3.08E-08	3.08E-08	7.39E-09	9.34E-09	7.89E-09	1.69E-03	6.20E-31	3.22E-28	4.47E-06
TESTES	G	1.76E-45	4.57E-31	8.54E-13	8.54E-13	1.18E-10	1.25E-12	3.91E-08	5.76E-31	2.01E-03	1.17E-29	1.19E-06
	B	0.0	0.0	0.0	0.0	0.0	0.0	0.0	0.0	6.41E-03	0.0	3.20E-06
	T	1.76E-45	4.57E-31	8.54E-13	8.54E-13	1.18E-10	1.25E-12	3.91E-08	5.76E-31	8.42E-03	1.17E-29	4.40E-06
THYMUS	G	1.42E-34	9.40E-20	1.35E-08	1.35E-08	1.19E-09	1.55E-09	8.87E-10	2.60E-21	1.04E-25	5.79E-11	1.10E-06
	B	0.0	0.0	0.0	0.0	0.0	0.0	0.0	0.0	0.0	0.0	3.20E-06
	T	1.42E-34	9.40E-20	1.35E-08	1.35E-08	1.19E-09	1.55E-09	8.87E-10	2.60E-21	1.04E-25	5.79E-11	4.31E-06
THYROID	G	1.09E-24	5.70E-28	6.24E-09	6.24E-09	5.04E-09	5.01E-09	5.92E-08	2.98E-28	1.18E-29	3.66E-03	1.39E-06
	B	0.0	0.0	0.0	0.0	0.0	0.0	0.0	0.0	0.0	1.12E-02	3.20E-06
	T	1.09E-24	5.70E-28	6.24E-09	6.24E-09	5.04E-09	5.01E-09	5.92E-08	2.98E-28	1.18E-29	1.49E-02	4.59E-06
UTERUS	G	8.63E-08	7.80E-20	4.39E-12	4.39E-12	3.02E-11	7.74E-12	2.44E-09	3.56E-20	1.76E-45	2.83E-25	1.20E-06
	B	0.0	0.0	0.0	0.0	0.0	0.0	0.0	0.0	0.0	0.0	3.20E-06
	T	8.63E-08	7.80E-20	4.39E-12	4.39E-12	3.02E-11	7.74E-12	2.44E-09	3.56E-20	1.76E-45	2.83E-25	4.41E-06
T BODY	G	1.13E-06	1.13E-06	1.13E-06	1.13E-06	1.13E-06	1.13E-06	9.92E-07	1.13E-06	1.13E-06	1.13E-06	1.13E-06
	B	3.20E-06	3.20E-06	3.20E-06	3.20E-06	3.20E-06	3.20E-06	3.20E-06	3.20E-06	3.20E-06	3.20E-06	3.20E-06
	T	4.34E-06	4.34E-06	4.34E-06	4.34E-06	4.34E-06	4.34E-06	4.20E-06	4.34E-06	4.34E-06	4.34E-06	4.33E-06

*"MUSCLE" VALUES MAY BE USED FOR "SEPARABLE FAT" WITH ADJUSTMENT (SEE TEXT)
PRINCIPLE REFERENCE-NUCLEAR DATA, VOL. 3, NOS. 3, 4, JANUARY (1970)
DATE DECAY DATA REVIEWED-FEBRUARY 1972

S, AVERAGE DOSE EQUIVALENT PER UNIT ACCUMULATED ACTIVITY (REM/UCI-DAY), FOR 26-IRON-59 (TR=4.500E 01 DAYS)

DATE OF TABLE 11-27-74

TARGET ORGANS		SOURCE ORGANS										
		ADRENALS	BLAD CON	S CONT	SI+CONT	ULI CONT	LLI CONT	KIDNEYS	LIVER	LUNG	RESP LYM NODE	MUSCLE*
ADRENALS	G	8.82E-02	5.10E-05	5.32E-04	2.31E-04	2.37E-04	9.78E-05	2.34E-03	9.04E-04	4.29E-04	4.29E-04	2.97E-04
	B	4.32E-01	0.0	0.0	0.0	0.0	0.0	0.0	0.0	0.0	0.0	0.0
	T	5.20E-01	5.10E-05	5.32E-04	2.31E-04	2.37E-04	9.78E-05	2.34E-03	9.04E-04	4.29E-04	4.29E-04	2.97E-04
BLAD WALL	G	5.20E-05	1.32E-02	9.62E-05	5.06E-04	3.78E-04	1.08E-03	9.36E-05	4.15E-05	1.93E-05	1.93E-05	3.41E-04
	B	0.0	1.51E-02	0.0	0.0	0.0	0.0	0.0	0.0	0.0	0.0	0.0
	T	5.20E-05	2.83E-02	9.62E-05	5.06E-04	3.78E-04	1.08E-03	9.36E-05	4.15E-05	1.93E-05	1.93E-05	3.41E-04
GI TRACT S WALL	G	5.53E-04	9.97E-05	9.65E-03	6.79E-04	6.56E-04	2.98E-04	5.99E-04	3.82E-04	3.81E-04	3.81E-04	2.75E-04
	B	0.0	0.0	1.21E-02	0.0	0.0	0.0	0.0	0.0	0.0	0.0	0.0
	T	5.53E-04	9.97E-05	2.17E-02	6.79E-04	6.56E-04	2.98E-04	5.99E-04	3.82E-04	3.81E-04	3.81E-04	2.75E-04
SI+CONT	G	1.97E-04	5.23E-04	4.78E-04	5.71E-03	2.96E-03	1.68E-03	5.47E-04	3.13E-04	6.47E-05	6.47E-05	2.98E-04
	B	0.0	0.0	0.0	7.55E-03	0.0	0.0	0.0	0.0	0.0	0.0	0.0
	T	1.97E-04	5.23E-04	4.78E-04	1.33E-02	2.96E-03	1.68E-03	5.47E-04	3.13E-04	6.47E-05	6.47E-05	2.98E-04
ULI WALL	G	2.08E-04	3.76E-04	6.34E-04	4.27E-03	8.12E-03	7.87E-04	5.61E-04	4.42E-04	8.53E-05	8.53E-05	3.16E-04
	B	0.0	0.0	0.0	0.0	1.37E-02	0.0	0.0	0.0	0.0	0.0	0.0
	T	2.08E-04	3.76E-04	6.34E-04	4.27E-03	2.19E-02	7.87E-04	5.61E-04	4.42E-04	8.53E-05	8.53E-05	3.16E-04
LLI WALL	G	6.04E-05	1.29E-03	2.75E-04	1.29E-03	6.08E-04	9.62E-03	1.86E-04	6.23E-05	1.70E-05	1.70E-05	3.26E-04
	B	0.0	0.0	0.0	0.0	0.0	2.24E-02	0.0	0.0	0.0	0.0	0.0
	T	6.04E-05	1.29E-03	2.75E-04	1.29E-03	6.08E-04	3.20E-02	1.86E-04	6.23E-05	1.70E-05	1.70E-05	3.26E-04
KIDNEYS	G	2.06E-03	8.31E-05	6.27E-04	5.89E-04	5.53E-04	1.85E-04	1.35E-02	7.10E-04	2.05E-04	2.05E-04	2.81E-04
	B	0.0	0.0	0.0	0.0	0.0	0.0	1.95E-02	0.0	0.0	0.0	0.0
	T	2.06E-03	8.31E-05	6.27E-04	5.89E-04	5.53E-04	1.85E-04	3.30E-02	7.10E-04	2.05E-04	2.05E-04	2.81E-04
LIVER	G	9.03E-04	6.05E-05	3.82E-04	3.61E-04	4.84E-04	8.34E-05	7.29E-04	4.77E-03	4.58E-04	4.58E-04	2.19E-04
	B	0.0	0.0	0.0	0.0	0.0	0.0	0.0	3.36E-03	0.0	0.0	0.0
	T	9.03E-04	6.05E-05	3.82E-04	3.61E-04	4.84E-04	8.34E-05	7.29E-04	8.13E-03	4.58E-04	4.58E-04	2.19E-04
LUNGS	G	4.63E-04	1.77E-05	3.43E-04	6.86E-05	8.51E-05	3.33E-05	1.93E-04	4.77E-04	2.72E-03	2.72E-03	2.56E-04
	B	0.0	0.0	0.0	0.0	0.0	0.0	0.0	0.0	6.04E-03	6.04E-03	0.0
	T	4.63E-04	1.77E-05	3.43E-04	6.86E-05	8.51E-05	3.33E-05	1.93E-04	4.77E-04	8.76E-03	8.76E-03	2.56E-04
RESP LYM NODE	G	4.63E-04	1.77E-05	3.43E-04	6.86E-05	8.51E-05	3.33E-05	1.93E-04	4.77E-04	2.72E-03	2.72E-03	2.56E-04
	B	0.0	0.0	0.0	0.0	0.0	0.0	0.0	0.0	6.04E-03	4.03E-01	0.0
	T	4.63E-04	1.77E-05	3.43E-04	6.86E-05	8.51E-05	3.33E-05	1.93E-04	4.77E-04	8.76E-03	4.06E-01	2.56E-04
MUSCLE*	G	2.97E-04	3.41E-04	2.75E-04	2.98E-04	2.86E-04	3.26E-04	2.81E-04	2.19E-04	2.56E-04	2.56E-04	2.96E-04
	B	0.0	0.0	0.0	0.0	0.0	0.0	0.0	0.0	0.0	0.0	2.16E-04
	T	2.97E-04	3.41E-04	2.75E-04	2.98E-04	2.86E-04	3.26E-04	2.81E-04	2.19E-04	2.56E-04	2.56E-04	5.12E-04
OVARIES	G	7.43E-05	1.05E-03	2.60E-04	1.81E-03	1.31E-03	3.24E-03	2.93E-04	1.73E-04	3.51E-05	3.51E-05	3.80E-04
	B	0.0	0.0	0.0	0.0	0.0	0.0	0.0	0.0	0.0	0.0	0.0
	T	7.43E-05	1.05E-03	2.60E-04	1.81E-03	1.31E-03	3.24E-03	2.93E-04	1.73E-04	3.51E-05	3.51E-05	3.80E-04

26-IRON-59 CONTINUED

TARGET ORGANS		SOURCE ORGANS										
		ADRENALS	BLAD CON	S CONT	SI+CONT	ULI CONT	LLI CONT	KIDNEYS	LIVER	LUNG	RESP LYM NODE	MUSCLE*
PANCREAS	G	1.67E-03	5.62E-05	3.15E-03	3.64E-04	4.05E-04	1.38E-04	1.30E-03	7.91E-04	4.43E-04	4.43E-04	3.41E-04
	B	0.0	0.0	0.0	0.0	0.0	0.0	0.0	0.0	0.0	0.0	0.0
	T	1.67E-03	5.62E-05	3.15E-03	3.64E-04	4.05E-04	1.38E-04	1.30E-03	7.91E-04	4.43E-04	4.43E-04	3.41E-04
SKELETON BONE	G	2.58E-04	1.07E-04	1.13E-04	1.50E-04	1.33E-04	1.93E-04	1.86E-04	1.39E-04	1.87E-04	1.87E-04	2.20E-04
	B	0.0	0.0	0.0	0.0	0.0	0.0	0.0	0.0	0.0	0.0	0.0
	T	2.58E-04	1.07E-04	1.13E-04	1.50E-04	1.33E-04	1.93E-04	1.86E-04	1.39E-04	1.87E-04	1.87E-04	2.20E-04
R MARROW	G	4.55E-04	2.22E-04	1.88E-04	4.58E-04	3.83E-04	5.69E-04	4.66E-04	1.97E-04	2.37E-04	2.37E-04	2.50E-04
	B	0.0	0.0	0.0	0.0	0.0	0.0	0.0	0.0	0.0	0.0	0.0
	T	4.55E-04	2.22E-04	1.88E-04	4.58E-04	3.83E-04	5.69E-04	4.66E-04	1.97E-04	2.37E-04	2.37E-04	2.50E-04
Y MARROW	G	2.51E-04	9.90E-05	1.58E-04	2.05E-04	1.88E-04	2.38E-04	2.30E-04	2.08E-04	1.94E-04	1.94E-04	2.05E-04
	B	0.0	0.0	0.0	0.0	0.0	0.0	0.0	0.0	0.0	0.0	0.0
	T	2.51E-04	9.90E-05	1.58E-04	2.05E-04	1.88E-04	2.38E-04	2.30E-04	2.08E-04	1.94E-04	1.94E-04	2.05E-04
T E CL	G	2.58E-04	1.07E-04	1.13E-04	1.50E-04	1.33E-04	1.93E-04	1.86E-04	1.39E-04	1.87E-04	1.87E-04	2.20E-04
	B	0.0	0.0	0.0	0.0	0.0	0.0	0.0	0.0	0.0	0.0	0.0
	T	2.58E-04	1.07E-04	1.13E-04	1.50E-04	1.33E-04	1.93E-04	1.86E-04	1.39E-04	1.87E-04	1.87E-04	2.20E-04
SKIN	G	1.48E-04	1.40E-04	1.23E-04	1.18E-04	1.13E-04	1.29E-04	1.33E-04	1.25E-04	1.39E-04	1.39E-04	1.87E-04
	B	0.0	0.0	0.0	0.0	0.0	0.0	0.0	0.0	0.0	0.0	0.0
	T	1.48E-04	1.40E-04	1.23E-04	1.18E-04	1.13E-04	1.29E-04	1.33E-04	1.25E-04	1.39E-04	1.39E-04	1.87E-04
SPLEEN	G	1.13E-03	4.71E-05	1.80E-03	3.13E-04	2.81E-04	2.04E-04	1.58E-03	2.12E-04	3.93E-04	3.93E-04	2.86E-04
	B	0.0	0.0	0.0	0.0	0.0	0.0	0.0	0.0	0.0	0.0	0.0
	T	1.13E-03	4.71E-05	1.80E-03	3.13E-04	2.81E-04	2.04E-04	1.58E-03	2.12E-04	3.93E-04	3.93E-04	2.86E-04
TESTES	G	1.89E-05	8.88E-04	3.51E-05	1.12E-04	1.02E-04	2.96E-04	3.54E-05	4.36E-05	7.86E-06	7.86E-06	2.46E-04
	B	0.0	0.0	0.0	0.0	0.0	0.0	0.0	0.0	0.0	0.0	0.0
	T	1.89E-05	8.88E-04	3.51E-05	1.12E-04	1.02E-04	2.96E-04	3.54E-05	4.36E-05	7.86E-06	7.86E-06	2.46E-04
THYMUS	G	1.23E-04	9.89E-06	1.60E-04	3.30E-05	3.55E-05	1.58E-05	3.66E-05	1.46E-04	8.29E-04	8.29E-04	3.32E-04
	B	0.0	0.0	0.0	0.0	0.0	0.0	0.0	0.0	0.0	0.0	0.0
	T	1.23E-04	9.89E-06	1.60E-04	3.30E-05	3.55E-05	1.58E-05	3.66E-05	1.46E-04	8.29E-04	8.29E-04	3.32E-04
THYROID	G	4.71E-05	3.82E-06	3.56E-05	1.18E-05	1.24E-05	6.12E-06	2.40E-05	4.16E-05	2.38E-04	2.38E-04	2.65E-04
	B	0.0	0.0	0.0	0.0	0.0	0.0	0.0	0.0	0.0	0.0	0.0
	T	4.71E-05	3.82E-06	3.56E-05	1.18E-05	1.24E-05	6.12E-06	2.40E-05	4.16E-05	2.38E-04	2.38E-04	2.65E-04
UTERUS	G	1.01E-04	2.69E-03	1.97E-04	1.58E-03	9.35E-04	1.09E-03	1.90E-04	9.63E-05	3.68E-05	3.68E-05	4.58E-04
	B	0.0	0.0	0.0	0.0	0.0	0.0	0.0	0.0	0.0	0.0	0.0
	T	1.01E-04	2.69E-03	1.97E-04	1.58E-03	9.35E-04	1.09E-03	1.90E-04	9.63E-05	3.68E-05	3.68E-05	4.58E-04
T BODY	G	3.24E-04	3.56E-04	3.41E-04	3.73E-04	3.66E-04	3.63E-04	3.27E-04	3.26E-04	2.77E-04	2.77E-04	2.82E-04
	B	8.63E-05	9.71E-06	2.59E-05	6.91E-05	4.12E-05	5.12E-05	8.63E-05	8.63E-05	8.63E-05	8.63E-05	8.63E-05
	T	4.11E-04	3.65E-04	3.67E-04	4.42E-04	4.07E-04	4.15E-04	4.14E-04	4.13E-04	3.63E-04	3.63E-04	3.68E-04

CONTINUED NEXT PAGE

26-IRON-59 CONTINUED

SOURCE ORGANS

TARGET ORGANS		OVARIES	PANCREAS	COR BONE	CAN BONE	R MARROW	Y MARROW	SKIN	SPLEEN	TESTES	THYROID	T BODY
ADRENALS	G	1.10E-04	1.37E-03	3.82E-04	3.82E-04	5.30E-04	1.61E-04	1.71E-04	1.34E-03	1.89E-05	4.47E-05	4.46E-04
	B	0.0	0.0	0.0	0.0	0.0	0.0	0.0	0.0	0.0	0.0	8.63E-05
	T	1.10E-04	1.37E-03	3.82E-04	3.82E-04	5.30E-04	1.61E-04	1.71E-04	1.34E-03	1.89E-05	4.47E-05	5.32E-04
BLAD WALL	G	1.33E-03	3.90E-05	1.11E-04	1.11E-04	2.29E-04	7.30E-05	1.62E-04	6.74E-05	9.74E-04	3.84E-06	3.85E-04
	B	0.0	0.0	0.0	0.0	0.0	0.0	0.0	0.0	0.0	0.0	8.63E-05
	T	1.33E-03	3.90E-05	1.11E-04	1.11E-04	2.29E-04	7.30E-05	1.62E-04	6.74E-05	9.74E-04	3.84E-06	4.71E-04
GI TRACT S WALL	G	1.69E-04	3.19E-03	1.11E-04	1.11E-04	2.31E-04	1.47E-04	1.31E-04	1.83E-03	1.96E-05	3.22E-05	3.02E-04
	B	0.0	0.0	0.0	0.0	0.0	0.0	0.0	0.0	0.0	0.0	8.63E-05
	T	1.69E-04	3.19E-03	1.11E-04	1.11E-04	2.31E-04	1.47E-04	1.31E-04	1.83E-03	1.96E-05	3.22E-05	3.88E-04
SI+CONT	G	2.12E-03	3.53E-04	1.60E-04	1.60E-04	4.89E-04	2.00E-04	1.20E-04	2.80E-04	1.08E-04	9.57E-06	3.73E-04
	B	0.0	0.0	0.0	0.0	0.0	0.0	0.0	0.0	0.0	0.0	8.63E-05
	T	2.12E-03	3.53E-04	1.60E-04	1.60E-04	4.89E-04	2.00E-04	1.20E-04	2.80E-04	1.08E-04	9.57E-06	4.60E-04
ULI WALL	G	2.01E-03	4.27E-04	1.52E-04	1.52E-04	3.63E-04	1.82E-04	1.26E-04	2.80E-04	7.94E-05	1.10E-05	3.51E-04
	B	0.0	0.0	0.0	0.0	0.0	0.0	0.0	0.0	0.0	0.0	8.63E-05
	T	2.01E-03	4.27E-04	1.52E-04	1.52E-04	3.63E-04	1.82E-04	1.26E-04	2.80E-04	7.94E-05	1.10E-05	4.37E-04
LLI WALL	G	2.54E-03	1.24E-04	2.05E-04	2.05E-04	5.61E-04	1.73E-04	1.29E-04	1.27E-04	4.59E-04	5.32E-06	3.77E-04
	B	0.0	0.0	0.0	0.0	0.0	0.0	0.0	0.0	0.0	0.0	8.63E-05
	T	2.54E-03	1.24E-04	2.05E-04	2.05E-04	5.61E-04	1.73E-04	1.29E-04	1.27E-04	4.59E-04	5.32E-06	4.63E-04
KIDNEYS	G	2.14E-04	1.15E-03	2.24E-04	2.24E-04	4.76E-04	2.28E-04	1.53E-04	1.57E-03	3.20E-05	2.92E-05	3.36E-04
	B	0.0	0.0	0.0	0.0	0.0	0.0	0.0	0.0	0.0	0.0	8.63E-05
	T	2.14E-04	1.15E-03	2.24E-04	2.24E-04	4.76E-04	2.28E-04	1.53E-04	1.57E-03	3.20E-05	2.92E-05	4.22E-04
LIVER	G	1.31E-04	7.68E-04	1.44E-04	1.44E-04	2.01E-04	2.19E-04	1.35E-04	2.13E-04	2.31E-05	4.14E-05	3.39E-04
	B	0.0	0.0	0.0	0.0	0.0	0.0	0.0	0.0	0.0	0.0	8.63E-05
	T	1.31E-04	7.68E-04	1.44E-04	1.44E-04	2.01E-04	2.19E-04	1.35E-04	2.13E-04	2.31E-05	4.14E-05	4.25E-04
LUNGS	G	3.32E-05	4.37E-04	1.94E-04	1.94E-04	2.43E-04	2.05E-04	1.43E-04	4.03E-04	7.47E-06	2.22E-04	2.66E-04
	B	0.0	0.0	0.0	0.0	0.0	0.0	0.0	0.0	0.0	0.0	8.63E-05
	T	3.32E-05	4.37E-04	1.94E-04	1.94E-04	2.43E-04	2.05E-04	1.43E-04	4.03E-04	7.47E-06	2.22E-04	3.53E-04
RESP LYM NODE	G	3.32E-05	4.37E-04	1.94E-04	1.94E-04	2.43E-04	2.05E-04	1.43E-04	4.03E-04	7.47E-06	2.22E-04	2.66E-04
	B	0.0	0.0	0.0	0.0	0.0	0.0	0.0	0.0	0.0	0.0	8.63E-05
	T	3.32E-05	4.37E-04	1.94E-04	1.94E-04	2.43E-04	2.05E-04	1.43E-04	4.03E-04	7.47E-06	2.22E-04	3.53E-04
MUSCLE*	G	3.80E-04	3.41E-04	2.20E-04	2.20E-04	2.56E-04	2.02E-04	1.87E-04	2.86E-04	2.46E-04	2.65E-04	2.82E-04
	B	0.0	0.0	0.0	0.0	0.0	0.0	0.0	0.0	0.0	0.0	8.63E-05
	T	3.80E-04	3.41E-04	2.20E-04	2.20E-04	2.56E-04	2.02E-04	1.87E-04	2.86E-04	2.46E-04	2.65E-04	3.68E-04
OVARIES	G	1.44E-01	1.86E-04	1.83E-04	1.83E-04	5.81E-04	1.86E-04	1.20E-04	1.15E-04	1.51E-48	6.31E-06	3.11E-04
	B	5.49E-01	0.0	0.0	0.0	0.0	0.0	0.0	0.0	0.0	0.0	8.63E-05
	T	6.93E-01	1.86E-04	1.83E-04	1.83E-04	5.81E-04	1.86E-04	1.20E-04	1.15E-04	1.51E-48	6.31E-06	3.98E-04

26-IRON-59 CONTINUED

TARGET ORGANS		SOURCE ORGANS										
		OVARIES	PANCREAS	COR BONE	CAN BONE	R MARROW	Y MARROW	SKIN	SPLEEN	TESTES	THYROID	T BODY
PANCREAS	G	1.60E-04	4.00E-02	2.10E-04	2.10E-04	2.30E-04	2.02E-04	1.03E-04	3.38E-03	2.40E-05	4.19E-05	3.14E-04
	B	0.0	6.04E-02	0.0	0.0	0.0	0.0	0.0	0.0	0.0	0.0	8.63E-05
	T	1.60E-04	1.00E-01	2.10E-04	2.10E-04	2.30E-04	2.02E-04	1.03E-04	3.38E-03	2.40E-05	4.19E-05	4.00E-04
SKELETON BONE	G	1.72E-04	1.73E-04	6.53E-04	6.53E-04	4.34E-04	4.88E-04	1.71E-04	1.49E-04	1.28E-04	1.45E-04	2.77E-04
	B	0.0	0.0	1.21E-03	9.11E-04	1.99E-04	0.0	0.0	0.0	0.0	0.0	8.63E-05
	T	1.72E-04	1.73E-04	1.86E-03	1.56E-03	6.33E-04	4.88E-04	1.71E-04	1.49E-04	1.28E-04	1.45E-04	3.64E-04
R MARROW	G	5.52E-04	3.21E-04	5.92E-04	5.92E-04	1.37E-03	5.00E-04	1.59E-04	2.15E-04	9.89E-05	1.56E-04	3.05E-04
	B	0.0	0.0	1.21E-05	9.93E-04	3.37E-03	0.0	0.0	0.0	0.0	0.0	8.63E-05
	T	5.52E-04	3.21E-04	6.04E-04	1.59E-03	4.74E-03	5.00E-04	1.59E-04	2.15E-04	9.89E-05	1.56E-04	3.91E-04
Y MARROW	G	2.25E-04	2.04E-04	5.64E-04	5.64E-04	5.36E-04	8.27E-04	1.81E-04	2.20E-04	5.67E-05	7.96E-05	2.58E-04
	B	0.0	0.0	0.0	0.0	0.0	4.03E-03	0.0	0.0	0.0	0.0	8.63E-05
	T	2.25E-04	2.04E-04	5.64E-04	5.64E-04	5.36E-04	4.86E-03	1.81E-04	2.20E-04	5.67E-05	7.96E-05	3.45E-04
T E CL	G	1.72E-04	1.73E-04	6.53E-04	6.53E-04	5.83E-04	5.38E-04	1.71E-04	1.49E-04	1.28E-04	1.45E-04	2.77E-04
	B	0.0	0.0	7.08E-04	1.40E-03	1.08E-03	1.01E-03	0.0	0.0	0.0	0.0	8.63E-05
	T	1.72E-04	1.73E-04	1.36E-03	2.06E-03	1.66E-03	1.55E-03	1.71E-04	1.49E-04	1.28E-04	1.45E-04	3.64E-04
SKIN	G	1.12E-04	1.12E-04	1.74E-04	1.74E-04	1.52E-04	1.88E-04	4.08E-04	1.29E-04	3.12E-04	1.84E-04	1.91E-04
	B	0.0	0.0	0.0	0.0	0.0	0.0	2.32E-03	0.0	0.0	0.0	8.63E-05
	T	1.12E-04	1.12E-04	1.74E-04	1.74E-04	1.52E-04	1.88E-04	2.73E-03	1.29E-04	3.12E-04	1.84E-04	2.77E-04
SPLEEN	G	1.15E-04	3.42E-03	1.58E-04	1.58E-04	2.02E-04	2.33E-04	1.44E-04	2.42E-02	1.35E-05	4.16E-05	3.24E-04
	B	0.0	0.0	0.0	0.0	0.0	0.0	0.0	3.36E-02	0.0	0.0	8.63E-05
	T	1.15E-04	3.42E-03	1.58E-04	1.58E-04	2.02E-04	2.33E-04	1.44E-04	5.77E-02	1.35E-05	4.16E-05	4.11E-04
TESTES	G	1.51E-48	2.65E-05	1.39E-04	1.39E-04	6.68E-05	1.77E-04	1.88E-04	2.42E-05	6.76E-02	1.73E-06	3.28E-04
	B	0.0	0.0	0.0	0.0	0.0	0.0	0.0	0.0	1.73E-01	0.0	8.63E-05
	T	1.51E-48	2.65E-05	1.39E-04	1.39E-04	6.68E-05	1.77E-04	1.88E-04	2.42E-05	2.40E-01	1.73E-06	4.14E-04
THYMUS	G	1.67E-05	1.16E-04	1.39E-04	1.39E-04	1.61E-04	1.14E-04	1.36E-04	9.99E-05	4.30E-06	7.70E-04	2.97E-04
	B	0.0	0.0	0.0	0.0	0.0	0.0	0.0	0.0	0.0	0.0	8.63E-05
	T	1.67E-05	1.16E-04	1.39E-04	1.39E-04	1.61E-04	1.14E-04	1.36E-04	9.99E-05	4.30E-06	7.70E-04	3.83E-04
THYROID	G	6.30E-06	2.02E-05	1.50E-04	1.50E-04	1.68E-04	1.20E-04	1.44E-04	3.48E-05	1.73E-06	9.19E-02	2.90E-04
	B	0.0	0.0	0.0	0.0	0.0	0.0	0.0	0.0	0.0	3.02E-01	8.63E-05
	T	6.30E-06	2.02E-05	1.50E-04	1.50E-04	1.68E-04	1.20E-04	1.44E-04	3.48E-05	1.73E-06	3.94E-01	3.76E-04
UTERUS	G	3.14E-03	1.19E-04	1.64E-04	1.64E-04	3.23E-04	1.15E-04	1.45E-04	9.34E-05	1.51E-48	6.04E-06	4.17E-04
	B	0.0	0.0	0.0	0.0	0.0	0.0	0.0	0.0	0.0	0.0	8.63E-05
	T	3.14E-03	1.19E-04	1.64E-04	1.64E-04	3.23E-04	1.15E-04	1.45E-04	9.34E-05	1.51E-48	6.04E-06	5.03E-04
T BODY	G	3.79E-04	3.71E-04	2.80E-04	2.80E-04	3.08E-04	2.49E-04	1.87E-04	3.25E-04	2.80E-04	2.54E-04	2.80E-04
	B	8.63E-05	8.63E-05	8.63E-05	8.63E-05	8.63E-05	8.63E-05	8.63E-05	8.63E-05	8.63E-05	8.63E-05	8.63E-05
	T	4.65E-04	4.57E-04	3.66E-04	3.66E-04	3.94E-04	3.36E-04	2.74E-04	4.12E-04	3.66E-04	3.40E-04	3.66E-04

*"MUSCLE" VALUES MAY BE USED FOR "SEPARABLE FAT" WITH ADJUSTMENT (SEE TEXT)
PRINCIPLE REFERENCE-LEGRAND, J. ET AL., NUCL. PHYS. A142, 63 (1970)
DATE DECAY DATA REVIEWED-FEBRUARY 1972

S, AVERAGE DOSE EQUIVALENT PER UNIT ACCUMULATED ACTIVITY (REM/UCI-DAY), FOR 27-COBALT-58M (TR=9.150E 00 HOURS)

DATE OF TABLE 11-27-74

TARGET ORGANS		SOURCE ORGANS										
		ADRENALS	BLAD CON	S CONT	SI+CONT	ULI CONT	LLI CONT	KIDNEYS	LIVER	LUNG	RESP LYM NODE	MUSCLE*
ADRENALS	G	7.51E-03	2.34E-10	5.33E-07	6.58E-08	1.82E-07	6.83E-09	2.70E-05	6.26E-06	1.52E-06	1.52E-06	3.69E-06
	B	6.47E-02	0.0	0.0	0.0	0.0	0.0	0.0	0.0	0.0	0.0	0.0
	T	7.22E-02	2.34E-10	5.33E-07	6.58E-08	1.82E-07	6.83E-09	2.70E-05	6.26E-06	1.52E-06	1.52E-06	3.69E-06
BLAD WALL	G	2.58E-10	4.09E-04	4.24E-09	9.06E-07	6.00E-07	4.99E-06	4.08E-09	2.00E-09	4.12E-11	4.12E-11	2.31E-06
	B	0.0	2.26E-03	0.0	0.0	0.0	0.0	0.0	0.0	0.0	0.0	0.0
	T	2.58E-10	2.67E-03	4.24E-09	9.06E-07	6.00E-07	4.99E-06	4.08E-09	2.00E-09	4.12E-11	4.12E-11	2.31E-06
GI TRACT S WALL	G	8.96E-07	4.93E-09	2.57E-04	3.43E-06	5.21E-06	8.91E-07	1.28E-06	7.49E-07	1.77E-06	1.77E-06	1.76E-06
	B	0.0	0.0	1.81E-03	0.0	0.0	0.0	0.0	0.0	0.0	0.0	0.0
	T	8.96E-07	4.93E-09	2.07E-03	3.43E-06	5.21E-06	8.91E-07	1.28E-06	7.49E-07	1.77E-06	1.77E-06	1.76E-06
SI+CONT	G	5.38E-08	7.94E-07	1.21E-06	1.75E-04	4.13E-05	2.14E-05	1.12E-06	5.70E-07	7.01E-09	7.01E-09	1.79E-06
	B	0.0	0.0	0.0	1.13E-03	0.0	0.0	0.0	0.0	0.0	0.0	0.0
	T	5.38E-08	7.94E-07	1.21E-06	1.31E-03	4.13E-05	2.14E-05	1.12E-06	5.70E-07	7.01E-09	7.01E-09	1.79E-06
ULI WALL	G	6.90E-08	4.72E-07	3.36E-06	1.22E-04	2.34E-04	9.99E-06	9.95E-07	1.56E-06	1.16E-08	1.16E-08	2.39E-06
	B	0.0	0.0	0.0	0.0	2.06E-03	0.0	0.0	0.0	0.0	0.0	0.0
	T	6.90E-08	4.72E-07	3.36E-06	1.22E-04	2.29E-03	9.99E-06	9.95E-07	1.56E-06	1.16E-08	1.16E-08	2.39E-06
LLI WALL	G	5.34E-09	6.49E-06	3.19E-07	2.14E-05	4.62E-06	3.11E-04	1.01E-07	3.98E-09	1.09E-09	1.09E-09	1.83E-06
	B	0.0	0.0	0.0	0.0	0.0	3.35E-03	0.0	0.0	0.0	0.0	0.0
	T	5.34E-09	6.49E-06	3.19E-07	2.14E-05	4.62E-06	3.66E-03	1.01E-07	3.98E-09	1.09E-09	1.09E-09	1.83E-06
KIDNEYS	G	2.60E-05	3.69E-09	1.29E-06	1.17E-06	9.20E-07	1.36E-07	6.82E-04	3.10E-06	1.95E-07	1.95E-07	2.54E-06
	B	0.0	0.0	0.0	0.0	0.0	0.0	2.92E-03	0.0	0.0	0.0	0.0
	T	2.60E-05	3.69E-09	1.29E-06	1.17E-06	9.20E-07	1.36E-07	3.60E-03	3.10E-06	1.95E-07	1.95E-07	2.54E-06
LIVER	G	5.98E-06	3.08E-09	6.75E-07	9.01E-07	1.42E-06	4.87E-09	3.06E-06	1.46E-04	3.24E-06	3.24E-06	1.41E-06
	B	0.0	0.0	0.0	0.0	0.0	0.0	0.0	5.03E-04	0.0	0.0	0.0
	T	5.98E-06	3.08E-09	6.75E-07	9.01E-07	1.42E-06	4.87E-09	3.06E-06	6.49E-04	3.24E-06	3.24E-06	1.41E-06
LUNGS	G	2.03E-06	1.15E-11	1.60E-06	9.46E-09	1.07E-08	4.37E-10	1.90E-07	3.95E-06	1.63E-04	1.63E-04	3.15E-06
	B	0.0	0.0	0.0	0.0	0.0	0.0	0.0	0.0	9.05E-04	9.05E-04	0.0
	T	2.03E-06	1.15E-11	1.60E-06	9.46E-09	1.07E-08	4.37E-10	1.90E-07	3.95E-06	1.07E-03	1.07E-03	3.15E-06
RESP LYM NODE	G	2.03E-06	1.15E-11	1.60E-06	9.46E-09	1.07E-08	4.37E-10	1.90E-07	3.95E-06	1.44E-04	1.63E-04	3.15E-06
	B	0.0	0.0	0.0	0.0	0.0	0.0	0.0	0.0	3.13E-04	6.03E-02	0.0
	T	2.03E-06	1.15E-11	1.60E-06	9.46E-09	1.07E-08	4.37E-10	1.90E-07	3.95E-06	4.57E-04	6.05E-02	3.15E-06
MUSCLE*	G	3.69E-06	2.31E-06	1.76E-06	1.79E-06	1.54E-06	1.83E-06	2.54E-06	1.41E-06	3.15E-06	3.15E-06	5.27E-06
	B	0.0	0.0	0.0	0.0	0.0	0.0	0.0	0.0	0.0	0.0	3.23E-05
	T	3.69E-06	2.31E-06	1.76E-06	1.79E-06	1.54E-06	1.83E-06	2.54E-06	1.41E-06	3.15E-06	3.15E-06	3.76E-05
OVARIES	G	3.66E-09	4.43E-06	4.35E-08	1.69E-05	2.03E-05	5.35E-05	7.24E-08	2.46E-08	4.70E-10	4.70E-10	3.88E-06
	B	0.0	0.0	0.0	0.0	0.0	0.0	0.0	0.0	0.0	0.0	0.0
	T	3.66E-09	4.43E-06	4.35E-08	1.69E-05	2.03E-05	5.35E-05	7.24E-08	2.46E-08	4.70E-10	4.70E-10	3.88E-06

27-COBALT-58M CONTINUED

TARGET ORGANS		SOURCE ORGANS										
		ADRENALS	BLAD CON	S CONT	SI+CONT	ULI CONT	LLI CONT	KIDNEYS	LIVER	LUNG	RESP LYM NODE	MUSCLE*
PANCREAS	G	6.94E-06	9.77E-10	3.22E-05	3.74E-07	4.14E-07	8.56E-08	4.35E-06	3.03E-06	1.45E-06	1.45E-06	3.54E-06
	B	0.0	0.0	0.0	0.0	0.0	0.0	0.0	0.0	0.0	0.0	0.0
	T	6.94E-06	9.77E-10	3.22E-05	3.74E-07	4.14E-07	8.56E-08	4.35E-06	3.03E-06	1.45E-06	1.45E-06	3.54E-06
SKELETON BONE	G	2.95E-06	1.77E-07	5.57E-07	1.07E-06	9.51E-07	2.85E-06	1.48E-06	1.20E-06	2.11E-06	2.11E-06	7.31E-07
	B	0.0	0.0	0.0	0.0	0.0	0.0	0.0	0.0	0.0	0.0	0.0
	T	2.95E-06	1.77E-07	5.57E-07	1.07E-06	9.51E-07	2.85E-06	1.48E-06	1.20E-06	2.11E-06	2.11E-06	7.31E-07
R MARROW	G	4.56E-06	5.93E-07	6.54E-07	4.31E-06	3.83E-06	1.16E-05	3.93E-06	1.16E-06	2.43E-06	2.43E-06	3.83E-06
	B	0.0	0.0	0.0	0.0	0.0	0.0	0.0	0.0	0.0	0.0	0.0
	T	4.56E-06	5.93E-07	6.54E-07	4.31E-06	3.83E-06	1.16E-05	3.93E-06	1.16E-06	2.43E-06	2.43E-06	3.83E-06
Y MARROW	G	2.74E-06	2.03E-07	7.91E-07	1.50E-06	1.36E-06	3.92E-06	1.77E-06	1.90E-06	2.51E-06	2.51E-06	3.23E-06
	B	0.0	0.0	0.0	0.0	0.0	0.0	0.0	0.0	0.0	0.0	0.0
	T	2.74E-06	2.03E-07	7.91E-07	1.50E-06	1.36E-06	3.92E-06	1.77E-06	1.90E-06	2.51E-06	2.51E-06	3.23E-06
T E CL	G	2.95E-06	1.77E-07	5.57E-07	1.07E-06	9.51E-07	2.85E-06	1.48E-06	1.20E-06	2.11E-06	2.11E-06	7.31E-07
	B	0.0	0.0	0.0	0.0	0.0	0.0	0.0	0.0	0.0	0.0	0.0
	T	2.95E-06	1.77E-07	5.57E-07	1.07E-06	9.51E-07	2.85E-06	1.48E-06	1.20E-06	2.11E-06	2.11E-06	7.31E-07
SKIN	G	4.42E-07	3.15E-07	2.86E-07	1.34E-07	1.60E-07	2.49E-07	5.63E-07	3.24E-07	3.94E-07	3.94E-07	1.99E-06
	B	0.0	0.0	0.0	0.0	0.0	0.0	0.0	0.0	0.0	0.0	0.0
	T	4.42E-07	3.15E-07	2.86E-07	1.34E-07	1.60E-07	2.49E-07	5.63E-07	3.24E-07	3.94E-07	3.94E-07	1.99E-06
SPLEEN	G	5.99E-06	7.17E-10	9.44E-06	4.10E-07	2.44E-07	8.70E-08	1.60E-05	1.22E-07	2.68E-06	2.68E-06	2.53E-06
	B	0.0	0.0	0.0	0.0	0.0	0.0	0.0	0.0	0.0	0.0	0.0
	T	5.99E-06	7.17E-10	9.44E-06	4.10E-07	2.44E-07	8.70E-08	1.60E-05	1.22E-07	2.68E-06	2.68E-06	2.53E-06
TESTES	G	4.21E-12	2.53E-06	7.80E-11	7.21E-09	7.22E-09	6.96E-07	6.50E-11	4.16E-11	8.34E-13	8.34E-13	1.27E-06
	B	0.0	0.0	0.0	0.0	0.0	0.0	0.0	0.0	0.0	0.0	0.0
	T	4.21E-12	2.53E-06	7.80E-11	7.21E-09	7.22E-09	6.96E-07	6.50E-11	4.16E-11	8.34E-13	8.34E-13	1.27E-06
THYMUS	G	8.59E-09	3.08E-13	5.12E-09	6.02E-11	8.15E-11	6.69E-12	9.26E-10	1.80E-08	3.20E-06	3.20E-06	6.77E-06
	B	0.0	0.0	0.0	0.0	0.0	0.0	0.0	0.0	0.0	0.0	0.0
	T	8.59E-09	3.08E-13	5.12E-09	6.02E-11	8.15E-11	6.69E-12	9.26E-10	1.80E-08	3.20E-06	3.20E-06	6.77E-06
THYROID	G	1.36E-10	4.29E-15	8.55E-11	7.76E-13	1.03E-12	1.09E-13	1.40E-11	1.81E-10	1.25E-07	1.25E-07	3.75E-06
	B	0.0	0.0	0.0	0.0	0.0	0.0	0.0	0.0	0.0	0.0	0.0
	T	1.36E-10	4.29E-15	8.55E-11	7.76E-13	1.03E-12	1.09E-13	1.40E-11	1.81E-10	1.25E-07	1.25E-07	3.75E-06
UTERUS	G	2.42E-09	2.33E-05	2.86E-08	1.14E-05	2.28E-06	3.74E-06	4.90E-08	1.26E-08	3.11E-10	3.11E-10	5.83E-06
	B	0.0	0.0	0.0	0.0	0.0	0.0	0.0	0.0	0.0	0.0	0.0
	T	2.42E-09	2.33E-05	2.86E-08	1.14E-05	2.28E-06	3.74E-06	4.90E-08	1.26E-08	3.11E-10	3.11E-10	5.83E-06
T BODY	G	4.99E-06	5.08E-06	5.07E-06	5.17E-06	5.15E-06	5.18E-06	4.92E-06	5.05E-06	4.99E-06	4.99E-06	4.33E-06
	B	1.29E-05	1.45E-06	3.88E-06	1.03E-05	6.17E-06	7.66E-06	1.29E-05	1.29E-05	1.29E-05	1.29E-05	1.29E-05
	T	1.79E-05	6.53E-06	8.95E-06	1.55E-05	1.13E-05	1.28E-05	1.78E-05	1.80E-05	1.79E-05	1.79E-05	1.73E-05

CONTINUED NEXT PAGE

27-COBALT-58M CONTINUED

TARGET ORGANS		SOURCE ORGANS										
		OVARIES	PANCREAS	COR BONE	CAN BONE	R MARROW	Y MARROW	SKIN	SPLEEN	TESTES	THYROID	T BODY
ADRENALS	G	3.66E-09	6.70E-06	1.14E-06	1.14E-06	2.13E-06	7.80E-07	5.74E-07	6.56E-06	4.21E-12	1.36E-10	3.85E-06
	B	0.0	0.0	0.0	0.0	0.0	0.0	0.0	0.0	0.0	0.0	1.29E-05
	T	3.66E-09	6.70E-06	1.14E-06	1.14E-06	2.13E-06	7.80E-07	5.74E-07	6.56E-06	4.21E-12	1.36E-10	1.68E-05
BLAD WALL	G	4.50E-06	1.06E-09	4.75E-08	4.75E-08	2.53E-07	1.08E-07	3.63E-07	8.01E-10	2.97E-06	4.73E-15	5.29E-06
	B	0.0	0.0	0.0	0.0	0.0	0.0	0.0	0.0	0.0	0.0	1.29E-05
	T	4.50E-06	1.06E-09	4.75E-08	4.75E-08	2.53E-07	1.08E-07	3.63E-07	8.01E-10	2.97E-06	4.73E-15	1.82E-05
GI TRACT S WALL	G	7.87E-08	4.08E-05	2.11E-07	2.11E-07	2.41E-07	3.77E-07	4.00E-07	1.01E-05	9.99E-11	1.09E-10	4.87E-06
	B	0.0	0.0	0.0	0.0	0.0	0.0	0.0	0.0	0.0	0.0	1.29E-05
	T	7.87E-08	4.08E-05	2.11E-07	2.11E-07	2.41E-07	3.77E-07	4.00E-07	1.01E-05	9.99E-11	1.09E-10	1.78E-05
SI+CONT	G	2.35E-05	2.86E-07	3.39E-07	3.39E-07	1.38E-06	5.11E-07	1.53E-07	2.38E-07	7.00E-09	7.89E-13	5.08E-06
	B	0.0	0.0	0.0	0.0	0.0	0.0	0.0	0.0	0.0	0.0	1.29E-05
	T	2.35E-05	2.86E-07	3.39E-07	3.39E-07	1.38E-06	5.11E-07	1.53E-07	2.38E-07	7.00E-09	7.89E-13	1.80E-05
ULI WALL	G	3.27E-05	4.28E-07	3.17E-07	3.17E-07	1.30E-06	4.18E-07	2.23E-07	3.37E-07	7.17E-09	1.06E-12	5.05E-06
	B	0.0	0.0	0.0	0.0	0.0	0.0	0.0	0.0	0.0	0.0	1.29E-05
	T	3.27E-05	4.28E-07	3.17E-07	3.17E-07	1.30E-06	4.18E-07	2.23E-07	3.37E-07	7.17E-09	1.06E-12	1.80E-05
LLI WALL	G	4.50E-05	4.63E-08	8.35E-07	8.35E-07	3.10E-06	7.59E-07	1.56E-07	6.92E-08	1.15E-06	8.50E-14	4.95E-06
	B	0.0	0.0	0.0	0.0	0.0	0.0	0.0	0.0	0.0	0.0	1.29E-05
	T	4.50E-05	4.63E-08	8.35E-07	8.35E-07	3.10E-06	7.59E-07	1.56E-07	6.92E-08	1.15E-06	8.50E-14	1.79E-05
KIDNEYS	G	8.20E-08	4.26E-06	3.79E-07	3.79E-07	9.91E-07	5.53E-07	6.15E-07	1.60E-05	6.50E-11	1.40E-11	4.48E-06
	B	0.0	0.0	0.0	0.0	0.0	0.0	0.0	0.0	0.0	0.0	1.29E-05
	T	8.20E-08	4.26E-06	3.79E-07	3.79E-07	9.91E-07	5.53E-07	6.15E-07	1.60E-05	6.50E-11	1.40E-11	1.74E-05
LIVER	G	3.64E-08	3.03E-06	3.31E-07	3.31E-07	3.26E-07	6.09E-07	3.45E-07	9.05E-08	4.11E-11	1.79E-10	4.95E-06
	B	0.0	0.0	0.0	0.0	0.0	0.0	0.0	0.0	0.0	0.0	1.29E-05
	T	3.64E-08	3.03E-06	3.31E-07	3.31E-07	3.26E-07	6.09E-07	3.45E-07	9.05E-08	4.11E-11	1.79E-10	1.79E-05
LUNGS	G	1.39E-10	1.51E-06	6.50E-07	6.50E-07	7.52E-07	8.42E-07	5.01E-07	2.68E-06	2.47E-13	1.90E-07	4.97E-06
	B	0.0	0.0	0.0	0.0	0.0	0.0	0.0	0.0	0.0	0.0	1.29E-05
	T	1.39E-10	1.51E-06	6.50E-07	6.50E-07	7.52E-07	8.42E-07	5.01E-07	2.68E-06	2.47E-13	1.90E-07	1.79E-05
RESP LYM NODE	G	1.39E-10	1.51E-06	6.50E-07	6.50E-07	7.52E-07	8.42E-07	5.01E-07	2.68E-06	2.47E-13	1.90E-07	4.97E-06
	B	0.0	0.0	0.0	0.0	0.0	0.0	0.0	0.0	0.0	0.0	1.29E-05
	T	1.39E-10	1.51E-06	6.50E-07	6.50E-07	7.52E-07	8.42E-07	5.01E-07	2.68E-06	2.47E-13	1.90E-07	1.79E-05
MUSCLE*	G	3.88E-06	3.54E-06	7.31E-07	7.31E-07	9.50E-07	9.14E-07	1.99E-06	2.53E-06	1.27E-06	3.75E-06	4.33E-06
	B	0.0	0.0	0.0	0.0	0.0	0.0	0.0	0.0	0.0	0.0	1.29E-05
	T	3.88E-06	3.54E-06	7.31E-07	7.31E-07	9.50E-07	9.14E-07	1.99E-06	2.53E-06	1.27E-06	3.75E-06	1.73E-05
OVARIES	G	1.33E-02	1.20E-08	7.20E-07	7.20E-07	1.36E-06	3.76E-07	1.18E-07	1.32E-08	1.63E-45	3.75E-14	5.06E-06
	B	8.23E-02	0.0	0.0	0.0	0.0	0.0	0.0	0.0	0.0	0.0	1.29E-05
	T	9.56E-02	1.20E-08	7.20E-07	7.20E-07	1.36E-06	3.76E-07	1.18E-07	1.32E-08	1.63E-45	3.75E-14	1.80E-05

27-COBALT-58M CONTINUED

SOURCE ORGANS

TARGET ORGANS		OVARIES	PANCREAS	COR BONE	CAN BONE	R MARROW	Y MARROW	SKIN	SPLEEN	TESTES	THYROID	T BODY
PANCREAS	G	1.19E-08	2.54E-03	3.49E-07	3.49E-07	3.45E-07	2.57E-07	1.41E-07	4.78E-05	1.76E-11	1.17E-10	5.40E-06
	B	0.0	9.05E-03	0.0	0.0	0.0	0.0	0.0	0.0	0.0	0.0	1.29E-05
	T	1.19E-08	1.16E-02	3.49E-07	3.49E-07	3.45E-07	2.57E-07	1.41E-07	4.78E-05	1.76E-11	1.17E-10	1.83E-05
SKELETON BONE	G	1.40E-06	8.75E-07	2.93E-05	2.93E-05	1.77E-05	2.28E-05	2.43E-06	1.14E-06	1.76E-07	4.92E-07	6.20E-06
	B	0.0	0.0	1.81E-04	1.75E-04	3.81E-06	0.0	0.0	0.0	0.0	0.0	1.29E-05
	T	1.40E-06	8.75E-07	2.10E-04	2.05E-04	2.15E-05	2.28E-05	2.43E-06	1.14E-06	1.76E-07	4.92E-07	1.91E-05
R MARROW	G	5.85E-06	1.60E-06	2.68E-05	2.68E-05	8.30E-05	2.34E-05	2.20E-06	1.18E-06	9.80E-08	4.60E-07	7.44E-06
	B	0.0	0.0	1.49E-07	1.90E-05	5.91E-04	0.0	0.0	0.0	0.0	0.0	1.29E-05
	T	5.85E-06	1.60E-06	2.69E-05	4.58E-05	6.74E-04	2.34E-05	2.20E-06	1.18E-06	9.80E-08	4.60E-07	2.04E-05
Y MARROW	G	1.97E-06	9.08E-07	2.69E-05	2.69E-05	2.59E-05	5.66E-05	3.01E-06	1.72E-06	3.81E-08	2.47E-07	6.94E-06
	B	0.0	0.0	0.0	0.0	0.0	6.03E-04	0.0	0.0	0.0	0.0	1.29E-05
	T	1.97E-06	9.08E-07	2.69E-05	2.69E-05	2.59E-05	6.60E-04	3.01E-06	1.72E-06	3.81E-08	2.47E-07	1.99E-05
T E CL	G	1.40E-06	8.75E-07	2.75E-05	2.75E-05	3.27E-05	3.22E-05	2.43E-06	1.14E-06	1.76E-07	4.92E-07	6.80E-06
	B	0.0	0.0	3.16E-05	6.62E-05	2.58E-04	1.51E-04	0.0	0.0	0.0	0.0	1.29E-05
	T	1.40E-06	8.75E-07	5.91E-05	9.37E-05	2.90E-04	1.83E-04	2.43E-06	1.14E-06	1.76E-07	4.92E-07	1.97E-05
SKIN	G	7.89E-08	8.54E-08	6.51E-07	6.51E-07	5.53E-07	8.89E-07	2.77E-05	2.80E-07	4.55E-06	1.33E-06	2.76E-06
	B	0.0	0.0	0.0	0.0	0.0	0.0	3.48E-04	0.0	0.0	0.0	1.29E-05
	T	7.89E-08	8.54E-08	6.51E-07	6.51E-07	5.53E-07	8.89E-07	3.76E-04	2.80E-07	4.55E-06	1.33E-06	1.57E-05
SPLEEN	G	1.44E-08	4.74E-05	5.26E-07	5.26E-07	2.81E-07	4.37E-07	2.95E-07	1.19E-03	1.48E-11	6.44E-11	5.00E-06
	B	0.0	0.0	0.0	0.0	0.0	0.0	0.0	5.03E-03	0.0	0.0	1.29E-05
	T	1.44E-08	4.74E-05	5.26E-07	5.26E-07	2.81E-07	4.37E-07	2.95E-07	6.21E-03	1.48E-11	6.44E-11	1.79E-05
TESTES	G	1.63E-45	1.76E-11	1.28E-07	1.28E-07	5.14E-08	1.81E-07	2.80E-06	1.46E-11	4.29E-03	1.10E-16	3.74E-06
	B	0.0	0.0	0.0	0.0	0.0	0.0	0.0	0.0	2.59E-02	0.0	1.29E-05
	T	1.63E-45	1.76E-11	1.28E-07	1.28E-07	5.14E-08	1.81E-07	2.80E-06	1.46E-11	3.02E-02	1.10E-16	1.67E-05
THYMUS	G	2.75E-12	8.65E-09	2.16E-07	2.16E-07	2.90E-07	4.96E-07	3.20E-07	2.75E-09	7.52E-15	1.74E-06	5.63E-06
	B	0.0	0.0	0.0	0.0	0.0	0.0	0.0	0.0	0.0	0.0	1.29E-05
	T	2.75E-12	8.65E-09	2.16E-07	2.16E-07	2.90E-07	4.96E-07	3.20E-07	2.75E-09	7.52E-15	1.74E-06	1.86E-05
THYROID	G	3.76E-14	1.17E-10	3.38E-07	3.38E-07	1.78E-07	3.64E-07	1.23E-06	6.40E-11	1.10E-16	6.77E-03	4.83E-06
	B	0.0	0.0	0.0	0.0	0.0	0.0	0.0	0.0	0.0	4.53E-02	1.29E-05
	T	3.76E-14	1.17E-10	3.38E-07	3.38E-07	1.78E-07	3.64E-07	1.23E-06	6.40E-11	1.10E-16	5.20E-02	1.78E-05
UTERUS	G	2.97E-05	1.65E-08	1.92E-07	1.92E-07	4.91E-07	1.82E-07	1.16E-07	6.11E-09	1.63E-45	3.04E-14	5.04E-06
	B	0.0	0.0	0.0	0.0	0.0	0.0	0.0	0.0	0.0	0.0	1.29E-05
	T	2.97E-05	1.65E-08	1.92E-07	1.92E-07	4.91E-07	1.82E-07	1.16E-07	6.11E-09	1.63E-45	3.04E-14	1.80E-05
T BODY	G	5.22E-06	5.21E-06	4.99E-06	4.99E-06	5.02E-06	4.88E-06	2.90E-06	5.07E-06	4.37E-06	4.63E-06	4.66E-06
	B	1.29E-05	1.29E-05	1.29E-05	1.29E-05	1.29E-05	1.29E-05	1.29E-05	1.29E-05	1.29E-05	1.29E-05	1.29E-05
	T	1.81E-05	1.81E-05	1.79E-05	1.79E-05	1.79E-05	1.78E-05	1.58E-05	1.80E-05	1.73E-05	1.76E-05	1.76E-05

*"MUSCLE" VALUES MAY BE USED FOR "SEPARABLE FAT" WITH ADJUSTMENT (SEE TEXT)
PRINCIPLE REFERENCE-NUCLEAR DATA VOL. 3, NOS. 3, 4, JANUARY (1970) ACADEMIC PRESS
DATE DECAY DATA REVIEWED-MARCH 1970

S, AVERAGE DOSE EQUIVALENT PER UNIT ACCUMULATED ACTIVITY (REM/UCI-DAY), FOR 27-COBALT-58 (TR=7.130E 01 DAYS)

DATE OF TABLE 11-27-74

TARGET ORGANS		SOURCE ORGANS										
		ADRENALS	BLAD CON	S CONT	SI+CONT	ULI CONT	LLI CONT	KIDNEYS	LIVER	LUNG	RESP LYM NODE	MUSCLE*
ADRENALS	G	8.16E-02	4.10E-05	3.59E-04	2.03E-04	1.91E-04	8.35E-05	2.07E-03	8.09E-04	4.01E-04	4.01E-04	2.56E-04
	B	1.29E-01	0.0	0.0	0.0	0.0	0.0	0.0	0.0	0.0	0.0	0.0
	T	2.11E-01	4.10E-05	3.59E-04	2.03E-04	1.91E-04	8.35E-05	2.07E-03	8.09E-04	4.01E-04	4.01E-04	2.56E-04
BLAD WALL	G	3.16E-05	1.20E-02	8.08E-05	4.59E-04	3.40E-04	8.86E-04	7.30E-05	4.39E-05	1.42E-05	1.42E-05	2.95E-04
	B	0.0	4.52E-03	0.0	0.0	0.0	0.0	0.0	0.0	0.0	0.0	0.0
	T	3.16E-05	1.65E-02	8.08E-05	4.59E-04	3.40E-04	8.86E-04	7.30E-05	4.39E-05	1.42E-05	1.42E-05	2.95E-04
GI TRACT S WALL	G	4.94E-04	7.49E-05	8.60E-03	5.75E-04	5.99E-04	2.79E-04	5.55E-04	3.23E-04	3.17E-04	3.17E-04	2.36E-04
	B	0.0	0.0	3.62E-03	0.0	0.0	0.0	0.0	0.0	0.0	0.0	0.0
	T	4.94E-04	7.49E-05	1.22E-02	5.75E-04	5.99E-04	2.79E-04	5.55E-04	3.23E-04	3.17E-04	3.17E-04	2.36E-04
SI+CONT	G	1.60E-04	4.45E-04	4.30E-04	5.09E-03	2.66E-03	1.47E-03	4.61E-04	2.65E-04	5.12E-05	5.12E-05	2.58E-04
	B	0.0	0.0	0.0	2.26E-03	0.0	0.0	0.0	0.0	0.0	0.0	0.0
	T	1.60E-04	4.45E-04	4.30E-04	7.35E-03	2.66E-03	1.47E-03	4.61E-04	2.65E-04	5.12E-05	5.12E-05	2.58E-04
ULI WALL	G	1.84E-04	3.57E-04	5.22E-04	3.78E-03	7.16E-03	6.75E-04	4.77E-04	4.12E-04	6.77E-05	6.77E-05	2.73E-04
	B	0.0	0.0	0.0	0.0	4.11E-03	0.0	0.0	0.0	0.0	0.0	0.0
	T	1.84E-04	3.57E-04	5.22E-04	3.78E-03	1.13E-02	6.75E-04	4.77E-04	4.12E-04	6.77E-05	6.77E-05	2.73E-04
LLI WALL	G	5.05E-05	1.13E-03	2.23E-04	1.13E-03	5.28E-04	8.49E-03	1.47E-04	5.01E-05	1.48E-05	1.48E-05	2.82E-04
	B	0.0	0.0	0.0	0.0	0.0	6.70E-03	0.0	0.0	0.0	0.0	0.0
	T	5.05E-05	1.13E-03	2.23E-04	1.13E-03	5.28E-04	1.52E-02	1.47E-04	5.01E-05	1.48E-05	1.48E-05	2.82E-04
KIDNEYS	G	1.88E-03	6.25E-05	5.46E-04	5.29E-04	4.68E-04	1.49E-04	1.22E-02	6.18E-04	1.70E-04	1.70E-04	2.41E-04
	B	0.0	0.0	0.0	0.0	0.0	0.0	5.84E-03	0.0	0.0	0.0	0.0
	T	1.88E-03	6.25E-05	5.46E-04	5.29E-04	4.68E-04	1.49E-04	1.80E-02	6.18E-04	1.70E-04	1.70E-04	2.41E-04
LIVER	G	7.95E-04	5.00E-05	3.33E-04	3.07E-04	4.14E-04	6.24E-05	6.48E-04	4.26E-03	3.97E-04	3.97E-04	1.88E-04
	B	0.0	0.0	0.0	0.0	0.0	0.0	0.0	1.01E-03	0.0	0.0	0.0
	T	7.95E-04	5.00E-05	3.33E-04	3.07E-04	4.14E-04	6.24E-05	6.48E-04	5.27E-03	3.97E-04	3.97E-04	1.88E-04
LUNGS	G	3.92E-04	1.14E-05	3.02E-04	5.82E-05	6.42E-05	2.28E-05	1.64E-04	4.03E-04	2.45E-03	2.45E-03	2.23E-04
	B	0.0	0.0	0.0	0.0	0.0	0.0	0.0	0.0	1.81E-03	1.81E-03	0.0
	T	3.92E-04	1.14E-05	3.02E-04	5.82E-05	6.42E-05	2.28E-05	1.64E-04	4.03E-04	4.26E-03	4.26E-03	2.23E-04
RESP LYM NODE	G	3.92E-04	1.14E-05	3.02E-04	5.82E-05	6.42E-05	2.28E-05	1.64E-04	4.03E-04	2.43E-03	2.45E-03	2.23E-04
	B	0.0	0.0	0.0	0.0	0.0	0.0	0.0	0.0	1.61E-03	1.21E-01	0.0
	T	3.92E-04	1.14E-05	3.02E-04	5.82E-05	6.42E-05	2.28E-05	1.64E-04	4.03E-04	4.03E-03	1.23E-01	2.23E-04
MUSCLE*	G	2.56E-04	2.95E-04	2.36E-04	2.58E-04	2.47E-04	2.82E-04	2.41E-04	1.88E-04	2.23E-04	2.23E-04	2.56E-04
	B	0.0	0.0	0.0	0.0	0.0	0.0	0.0	0.0	0.0	0.0	6.46E-05
	T	2.56E-04	2.95E-04	2.36E-04	2.58E-04	2.47E-04	2.82E-04	2.41E-04	1.88E-04	2.23E-04	2.23E-04	3.21E-04
OVARIES	G	9.18E-05	8.73E-04	1.74E-04	1.60E-03	1.65E-03	2.73E-03	2.36E-04	8.14E-05	2.76E-05	2.76E-05	3.31E-04
	B	0.0	0.0	0.0	0.0	0.0	0.0	0.0	0.0	0.0	0.0	0.0
	T	9.18E-05	8.73E-04	1.74E-04	1.60E-03	1.65E-03	2.73E-03	2.36E-04	8.14E-05	2.76E-05	2.76E-05	3.31E-04

27-COBALT-58 CONTINUED

SOURCE ORGANS

TARGET ORGANS		ADRENALS	BLAD CON	S CONT	SI+CONT	ULI CONT	LLI CONT	KIDNEYS	LIVER	LUNG	RESP LYM NODE	MUSCLE*
PANCREAS	G	1.43E-03	4.75E-05	2.80E-03	3.42E-04	3.25E-04	1.25E-04	1.12E-03	7.49E-04	4.15E-04	4.15E-04	2.97E-04
	B	0.0	0.0	0.0	0.0	0.0	0.0	0.0	0.0	0.0	0.0	0.0
	T	1.43E-03	4.75E-05	2.80E-03	3.42E-04	3.25E-04	1.25E-04	1.12E-03	7.49E-04	4.15E-04	4.15E-04	2.97E-04
SKELETON BONE	G	2.26E-04	9.49E-05	9.91E-05	1.30E-04	1.17E-04	1.70E-04	1.62E-04	1.20E-04	1.65E-04	1.65E-04	1.87E-04
	B	0.0	0.0	0.0	0.0	0.0	0.0	0.0	0.0	0.0	0.0	0.0
	T	2.26E-04	9.49E-05	9.91E-05	1.30E-04	1.17E-04	1.70E-04	1.62E-04	1.20E-04	1.65E-04	1.65E-04	1.87E-04
R MARROW	G	4.03E-04	2.00E-04	1.69E-04	4.08E-04	3.45E-04	5.09E-04	4.08E-04	1.73E-04	2.09E-04	2.09E-04	2.25E-04
	B	0.0	0.0	0.0	0.0	0.0	0.0	0.0	0.0	0.0	0.0	0.0
	T	4.03E-04	2.00E-04	1.69E-04	4.08E-04	3.45E-04	5.09E-04	4.08E-04	1.73E-04	2.09E-04	2.09E-04	2.25E-04
Y MARROW	G	2.20E-04	8.74E-05	1.37E-04	1.80E-04	1.66E-04	2.10E-04	2.01E-04	1.78E-04	1.74E-04	1.74E-04	1.84E-04
	B	0.0	0.0	0.0	0.0	0.0	0.0	0.0	0.0	0.0	0.0	0.0
	T	2.20E-04	8.74E-05	1.37E-04	1.80E-04	1.66E-04	2.10E-04	2.01E-04	1.78E-04	1.74E-04	1.74E-04	1.84E-04
T E CL	G	2.26E-04	9.49E-05	9.91E-05	1.30E-04	1.17E-04	1.70E-04	1.62E-04	1.20E-04	1.65E-04	1.65E-04	1.87E-04
	B	0.0	0.0	0.0	0.0	0.0	0.0	0.0	0.0	0.0	0.0	0.0
	T	2.26E-04	9.49E-05	9.91E-05	1.30E-04	1.17E-04	1.70E-04	1.62E-04	1.20E-04	1.65E-04	1.65E-04	1.87E-04
SKIN	G	1.20E-04	1.15E-04	1.03E-04	9.43E-05	9.46E-05	1.02E-04	1.13E-04	1.04E-04	1.16E-04	1.16E-04	1.58E-04
	B	0.0	0.0	0.0	0.0	0.0	0.0	0.0	0.0	0.0	0.0	0.0
	T	1.20E-04	1.15E-04	1.03E-04	9.43E-05	9.46E-05	1.02E-04	1.13E-04	1.04E-04	1.16E-04	1.16E-04	1.58E-04
SPLEEN	G	1.04E-03	4.11E-05	1.57E-03	2.61E-04	2.20E-04	1.70E-04	1.38E-03	1.82E-04	3.62E-04	3.62E-04	2.46E-04
	B	0.0	0.0	0.0	0.0	0.0	0.0	0.0	0.0	0.0	0.0	0.0
	T	1.04E-03	4.11E-05	1.57E-03	2.61E-04	2.20E-04	1.70E-04	1.38E-03	1.82E-04	3.62E-04	3.62E-04	2.46E-04
TESTES	G	1.38E-05	8.28E-04	1.70E-05	7.68E-05	9.24E-05	2.97E-04	2.75E-05	3.22E-05	5.21E-06	5.21E-06	2.09E-04
	B	0.0	0.0	0.0	0.0	0.0	0.0	0.0	0.0	0.0	0.0	0.0
	T	1.38E-05	8.28E-04	1.70E-05	7.68E-05	9.24E-05	2.97E-04	2.75E-05	3.22E-05	5.21E-06	5.21E-06	2.09E-04
THYMUS	G	1.31E-04	6.67E-06	9.38E-05	2.56E-05	2.78E-05	1.14E-05	4.08E-05	1.77E-04	6.58E-04	6.58E-04	2.53E-04
	B	0.0	0.0	0.0	0.0	0.0	0.0	0.0	0.0	0.0	0.0	0.0
	T	1.31E-04	6.67E-06	9.38E-05	2.56E-05	2.78E-05	1.14E-05	4.08E-05	1.77E-04	6.58E-04	6.58E-04	2.53E-04
THYROID	G	3.56E-05	2.28E-06	2.78E-05	8.15E-06	8.66E-06	3.96E-06	1.80E-05	3.29E-05	2.20E-04	2.20E-04	2.30E-04
	B	0.0	0.0	0.0	0.0	0.0	0.0	0.0	0.0	0.0	0.0	0.0
	T	3.56E-05	2.28E-06	2.78E-05	8.15E-06	8.66E-06	3.96E-06	1.80E-05	3.29E-05	2.20E-04	2.20E-04	2.30E-04
UTERUS	G	7.54E-05	2.44E-03	1.58E-04	1.42E-03	7.66E-04	9.25E-04	1.41E-04	7.00E-05	1.86E-05	1.86E-05	3.88E-04
	B	0.0	0.0	0.0	0.0	0.0	0.0	0.0	0.0	0.0	0.0	0.0
	T	7.54E-05	2.44E-03	1.58E-04	1.42E-03	7.66E-04	9.25E-04	1.41E-04	7.00E-05	1.86E-05	1.86E-05	3.88E-04
T BODY	G	2.82E-04	3.11E-04	2.97E-04	3.26E-04	3.19E-04	3.16E-04	2.84E-04	2.84E-04	2.42E-04	2.42E-04	2.44E-04
	B	2.58E-05	2.91E-06	7.75E-06	2.07E-05	1.23E-05	1.53E-05	2.58E-05	2.58E-05	2.58E-05	2.58E-05	2.58E-05
	T	3.08E-04	3.14E-04	3.05E-04	3.46E-04	3.31E-04	3.32E-04	3.10E-04	3.10E-04	2.68E-04	2.68E-04	2.70E-04

CONTINUED NEXT PAGE

27-COBALT-58 CONTINUED

TARGET ORGANS		SOURCE ORGANS										
		OVARIES	PANCREAS	COR BONE	CAN BONE	R MARROW	Y MARROW	SKIN	SPLEEN	TESTES	THYROID	T BODY
ADRENALS	G	9.86E-05	1.25E-03	3.01E-04	3.01E-04	4.03E-04	1.32E-04	1.27E-04	1.11E-03	1.38E-05	3.55E-05	3.41E-04
	B	0.0	0.0	0.0	0.0	0.0	0.0	0.0	0.0	0.0	0.0	2.58E-05
	T	9.86E-05	1.25E-03	3.01E-04	3.01E-04	4.03E-04	1.32E-04	1.27E-04	1.11E-03	1.38E-05	3.55E-05	3.67E-04
BLAD WALL	G	1.14E-03	2.71E-05	9.06E-05	9.06E-05	1.55E-04	4.90E-05	1.21E-04	4.36E-05	8.70E-04	2.30E-06	3.27E-04
	B	0.0	0.0	0.0	0.0	0.0	0.0	0.0	0.0	0.0	0.0	2.58E-05
	T	1.14E-03	2.71E-05	9.06E-05	9.06E-05	1.55E-04	4.90E-05	1.21E-04	4.36E-05	8.70E-04	2.30E-06	3.53E-04
GI TRACT S WALL	G	1.34E-04	2.80E-03	9.45E-05	9.45E-05	1.85E-04	1.27E-04	1.12E-04	1.57E-03	1.69E-05	2.27E-05	2.91E-04
	B	0.0	0.0	0.0	0.0	0.0	0.0	0.0	0.0	0.0	0.0	2.58E-05
	T	1.34E-04	2.80E-03	9.45E-05	9.45E-05	1.85E-04	1.27E-04	1.12E-04	1.57E-03	1.69E-05	2.27E-05	3.16E-04
SI+CONT	G	1.90E-03	2.99E-04	1.39E-04	1.39E-04	4.41E-04	1.74E-04	9.80E-05	2.33E-04	9.08E-05	4.24E-06	3.28E-04
	B	0.0	0.0	0.0	0.0	0.0	0.0	0.0	0.0	0.0	0.0	2.58E-05
	T	1.90E-03	2.99E-04	1.39E-04	1.39E-04	4.41E-04	1.74E-04	9.80E-05	2.33E-04	9.08E-05	4.24E-06	3.54E-04
ULI WALL	G	1.79E-03	3.65E-04	1.26E-04	1.26E-04	3.28E-04	1.44E-04	1.06E-04	2.35E-04	6.31E-05	4.88E-06	3.19E-04
	B	0.0	0.0	0.0	0.0	0.0	0.0	0.0	0.0	0.0	0.0	2.58E-05
	T	1.79E-03	3.65E-04	1.26E-04	1.26E-04	3.28E-04	1.44E-04	1.06E-04	2.35E-04	6.31E-05	4.88E-06	3.45E-04
LLI WALL	G	2.28E-03	9.25E-05	1.71E-04	1.71E-04	5.05E-04	1.37E-04	1.08E-04	1.11E-04	4.24E-04	3.38E-06	3.31E-04
	B	0.0	0.0	0.0	0.0	0.0	0.0	0.0	0.0	0.0	0.0	2.58E-05
	T	2.28E-03	9.25E-05	1.71E-04	1.71E-04	5.05E-04	1.37E-04	1.08E-04	1.11E-04	4.24E-04	3.38E-06	3.57E-04
KIDNEYS	G	1.88E-04	1.02E-03	1.80E-04	1.80E-04	3.96E-04	2.01E-04	1.30E-04	1.37E-03	2.17E-05	1.49E-05	3.00E-04
	B	0.0	0.0	0.0	0.0	0.0	0.0	0.0	0.0	0.0	0.0	2.58E-05
	T	1.88E-04	1.02E-03	1.80E-04	1.80E-04	3.96E-04	2.01E-04	1.30E-04	1.37E-03	2.17E-05	1.49E-05	3.26E-04
LIVER	G	1.07E-04	6.74E-04	1.21E-04	1.21E-04	1.70E-04	1.85E-04	1.15E-04	1.81E-04	1.37E-05	3.03E-05	2.99E-04
	B	0.0	0.0	0.0	0.0	0.0	0.0	0.0	0.0	0.0	0.0	2.58E-05
	T	1.07E-04	6.74E-04	1.21E-04	1.21E-04	1.70E-04	1.85E-04	1.15E-04	1.81E-04	1.37E-05	3.03E-05	3.24E-04
LUNGS	G	2.35E-05	3.90E-04	1.67E-04	1.67E-04	2.03E-04	1.71E-04	1.18E-04	3.60E-04	3.85E-06	1.88E-04	2.48E-04
	B	0.0	0.0	0.0	0.0	0.0	0.0	0.0	0.0	0.0	0.0	2.58E-05
	T	2.35E-05	3.90E-04	1.67E-04	1.67E-04	2.03E-04	1.71E-04	1.18E-04	3.60E-04	3.85E-06	1.88E-04	2.74E-04
RESP LYM NODE	G	2.35E-05	3.90E-04	1.67E-04	1.67E-04	2.03E-04	1.71E-04	1.18E-04	3.60E-04	3.85E-06	1.88E-04	2.48E-04
	B	0.0	0.0	0.0	0.0	0.0	0.0	0.0	0.0	0.0	0.0	2.58E-05
	T	2.35E-05	3.90E-04	1.67E-04	1.67E-04	2.03E-04	1.71E-04	1.18E-04	3.60E-04	3.85E-06	1.88E-04	2.74E-04
MUSCLE*	G	3.31E-04	2.97E-04	1.87E-04	1.87E-04	2.20E-04	1.74E-04	1.58E-04	2.46E-04	2.09E-04	2.30E-04	2.44E-04
	B	0.0	0.0	0.0	0.0	0.0	0.0	0.0	0.0	0.0	0.0	2.58E-05
	T	3.31E-04	2.97E-04	1.87E-04	1.87E-04	2.20E-04	1.74E-04	1.58E-04	2.46E-04	2.09E-04	2.30E-04	2.70E-04
OVARIES	G	1.34E-01	1.22E-04	1.72E-04	1.72E-04	5.18E-04	1.50E-04	7.99E-05	1.32E-04	1.91E-45	4.02E-06	2.51E-04
	B	1.64E-01	0.0	0.0	0.0	0.0	0.0	0.0	0.0	0.0	0.0	2.58E-05
	T	2.99E-01	1.22E-04	1.72E-04	1.72E-04	5.18E-04	1.50E-04	7.99E-05	1.32E-04	1.91E-45	4.02E-06	2.77E-04

27-COBALT-58 CONTINUED

SOURCE ORGANS

TARGET ORGANS		OVARIES	PANCREAS	COR BONE	CAN BONE	R MARROW	Y MARROW	SKIN	SPLEEN	TESTES	THYROID	T BODY
PANCREAS	G	1.28E-04	3.62E-02	1.61E-04	1.61E-04	2.37E-04	1.94E-04	9.08E-05	3.11E-03	1.26E-05	1.09E-05	2.82E-04
	B	0.0	1.81E-02	0.0	0.0	0.0	0.0	0.0	0.0	0.0	0.0	2.58E-05
	T	1.28E-04	5.43E-02	1.61E-04	1.61E-04	2.37E-04	1.94E-04	9.08E-05	3.11E-03	1.26E-05	1.09E-05	3.08E-04
SKELETON BONE	G	1.51E-04	1.50E-04	5.82E-04	5.82E-04	3.86E-04	4.30E-04	1.44E-04	1.28E-04	1.11E-04	1.25E-04	2.46E-04
	B	0.0	0.0	3.62E-04	2.48E-04	7.59E-05	0.0	0.0	0.0	0.0	0.0	2.58E-05
	T	1.51E-04	1.50E-04	9.44E-04	8.30E-04	4.62E-04	4.30E-04	1.44E-04	1.28E-04	1.11E-04	1.25E-04	2.72E-04
R MARROW	G	4.97E-04	2.82E-04	5.21E-04	5.21E-04	1.25E-03	4.46E-04	1.34E-04	1.88E-04	8.75E-05	1.36E-04	2.72E-04
	B	0.0	0.0	5.35E-06	3.80E-04	9.53E-04	0.0	0.0	0.0	0.0	0.0	2.58E-05
	T	4.97E-04	2.82E-04	5.26E-04	9.01E-04	2.20E-03	4.46E-04	1.34E-04	1.88E-04	8.75E-05	1.36E-04	2.98E-04
Y MARROW	G	2.01E-04	1.77E-04	5.01E-04	5.01E-04	4.77E-04	7.50E-04	1.53E-04	1.91E-04	4.80E-05	6.69E-05	2.31E-04
	B	0.0	0.0	0.0	0.0	0.0	1.21E-03	0.0	0.0	0.0	0.0	2.58E-05
	T	2.01E-04	1.77E-04	5.01E-04	5.01E-04	4.77E-04	1.96E-03	1.53E-04	1.91E-04	4.80E-05	6.69E-05	2.57E-04
T E CL	G	1.51E-04	1.50E-04	5.79E-04	5.79E-04	5.29E-04	4.85E-04	1.44E-04	1.28E-04	1.11E-04	1.25E-04	2.47E-04
	B	0.0	0.0	2.05E-04	3.78E-04	3.51E-04	3.02E-04	0.0	0.0	0.0	0.0	2.58E-05
	T	1.51E-04	1.50E-04	7.84E-04	9.57E-04	8.80E-04	7.86E-04	1.44E-04	1.28E-04	1.11E-04	1.25E-04	2.73E-04
SKIN	G	9.30E-05	9.13E-05	1.47E-04	1.47E-04	1.27E-04	1.63E-04	3.67E-04	1.09E-04	2.66E-04	1.51E-04	1.57E-04
	B	0.0	0.0	0.0	0.0	0.0	0.0	6.96E-04	0.0	0.0	0.0	2.58E-05
	T	9.30E-05	9.13E-05	1.47E-04	1.47E-04	1.27E-04	1.63E-04	1.06E-03	1.09E-04	2.66E-04	1.51E-04	1.83E-04
SPLEEN	G	1.11E-04	3.08E-03	1.46E-04	1.46E-04	1.59E-04	1.78E-04	1.24E-04	2.19E-02	1.64E-05	2.94E-05	2.98E-04
	B	0.0	0.0	0.0	0.0	0.0	0.0	0.0	1.01E-02	0.0	0.0	2.58E-05
	T	1.11E-04	3.08E-03	1.46E-04	1.46E-04	1.59E-04	1.78E-04	1.24E-04	3.19E-02	1.64E-05	2.94E-05	3.24E-04
TESTES	G	1.91E-45	1.64E-05	1.06E-04	1.06E-04	7.36E-05	1.59E-04	1.49E-04	1.81E-05	6.16E-02	9.31E-07	3.05E-04
	B	0.0	0.0	0.0	0.0	0.0	0.0	0.0	0.0	5.17E-02	0.0	2.58E-05
	T	1.91E-45	1.64E-05	1.06E-04	1.06E-04	7.36E-05	1.59E-04	1.49E-04	1.81E-05	1.13E-01	9.31E-07	3.31E-04
THYMUS	G	1.20E-05	8.98E-05	1.37E-04	1.37E-04	9.63E-05	6.75E-05	1.35E-04	1.02E-04	2.61E-06	6.85E-04	2.34E-04
	B	0.0	0.0	0.0	0.0	0.0	0.0	0.0	0.0	0.0	0.0	2.58E-05
	T	1.20E-05	8.98E-05	1.37E-04	1.37E-04	9.63E-05	6.75E-05	1.35E-04	1.02E-04	2.61E-06	6.85E-04	2.59E-04
THYROID	G	4.02E-06	1.80E-05	1.34E-04	1.34E-04	1.58E-04	8.19E-05	1.32E-04	2.71E-05	9.32E-07	8.35E-02	2.56E-04
	B	0.0	0.0	0.0	0.0	0.0	0.0	0.0	0.0	0.0	9.05E-02	2.58E-05
	T	4.02E-06	1.80E-05	1.34E-04	1.34E-04	1.58E-04	8.19E-05	1.32E-04	2.71E-05	9.32E-07	1.74E-01	2.82E-04
UTERUS	G	2.86E-03	1.04E-04	1.29E-04	1.29E-04	2.92E-04	1.14E-04	1.14E-04	9.32E-05	1.91E-45	3.83E-06	3.53E-04
	B	0.0	0.0	0.0	0.0	0.0	0.0	0.0	0.0	0.0	0.0	2.58E-05
	T	2.86E-03	1.04E-04	1.29E-04	1.29E-04	2.92E-04	1.14E-04	1.14E-04	9.32E-05	1.91E-45	3.83E-06	3.79E-04
T BODY	G	3.32E-04	3.24E-04	2.42E-04	2.42E-04	2.67E-04	2.16E-04	1.59E-04	2.83E-04	2.41E-04	2.20E-04	2.43E-04
	B	2.58E-05	2.58E-05	2.58E-05	2.58E-05	2.58E-05	2.58E-05	2.58E-05	2.58E-05	2.58E-05	2.58E-05	2.58E-05
	T	3.58E-04	3.50E-04	2.67E-04	2.67E-04	2.93E-04	2.42E-04	1.85E-04	3.09E-04	2.67E-04	2.46E-04	2.69E-04

*"MUSCLE" VALUES MAY BE USED FOR "SEPARABLE FAT" WITH ADJUSTMENT (SEE TEXT)
PRINCIPLE REFERENCE-NUCLEAR DATA VOL. 3, NOS. 3, 4, JANUARY (1970)
DATE DECAY DATA REVIEWED-FEBRUARY 1972

S, AVERAGE DOSE EQUIVALENT PER UNIT ACCUMULATED ACTIVITY (REM/UCI-DAY), FOR 27-COBALT-60 (TR=5.260E 00 YEARS)

DATE OF TABLE 11-27-74

TARGET ORGANS		SOURCE ORGANS										
		ADRENALS	BLAD CON	S CONT	SI+CONT	ULI CONT	LLI CONT	KIDNEYS	LIVER	LUNG	RESP LYM NODE	MUSCLE*
ADRENALS	G	1.83E-01	1.08E-04	1.19E-03	4.83E-04	4.87E-04	2.05E-04	4.87E-03	1.87E-03	8.71E-04	8.71E-04	6.20E-04
	B	3.47E-01	0.0	0.0	0.0	0.0	0.0	0.0	0.0	0.0	0.0	0.0
	T	5.30E-01	1.08E-04	1.19E-03	4.83E-04	4.87E-04	2.05E-04	4.87E-03	1.87E-03	8.71E-04	8.71E-04	6.20E-04
BLAD WALL	G	1.09E-04	2.75E-02	2.00E-04	1.13E-03	7.57E-04	2.34E-03	1.95E-04	9.20E-05	4.11E-05	4.11E-05	7.12E-04
	B	0.0	1.22E-02	0.0	0.0	0.0	0.0	0.0	0.0	0.0	0.0	0.0
	T	1.09E-04	3.96E-02	2.00E-04	1.13E-03	7.57E-04	2.34E-03	1.95E-04	9.20E-05	4.11E-05	4.11E-05	7.12E-04
GI TRACT S WALL	G	1.14E-03	2.01E-04	2.00E-02	1.42E-03	1.34E-03	6.21E-04	1.22E-03	7.95E-04	7.99E-04	7.99E-04	5.75E-04
	B	0.0	0.0	9.73E-03	0.0	0.0	0.0	0.0	0.0	0.0	0.0	0.0
	T	1.14E-03	2.01E-04	2.97E-02	1.42E-03	1.34E-03	6.21E-04	1.22E-03	7.95E-04	7.99E-04	7.99E-04	5.75E-04
SI+CONT	G	4.20E-04	1.09E-03	9.92E-04	1.19E-02	6.13E-03	3.51E-03	1.15E-03	6.57E-04	1.36E-04	1.36E-04	6.23E-04
	B	0.0	0.0	0.0	6.08E-03	0.0	0.0	0.0	0.0	0.0	0.0	0.0
	T	4.20E-04	1.09E-03	9.92E-04	1.80E-02	6.13E-03	3.51E-03	1.15E-03	6.57E-04	1.36E-04	1.36E-04	6.23E-04
ULI WALL	G	4.24E-04	7.90E-04	1.37E-03	8.89E-03	1.68E-02	1.67E-03	1.18E-03	9.09E-04	1.81E-04	1.81E-04	6.60E-04
	B	0.0	0.0	0.0	0.0	1.11E-02	0.0	0.0	0.0	0.0	0.0	0.0
	T	4.24E-04	7.90E-04	1.37E-03	8.89E-03	2.79E-02	1.67E-03	1.18E-03	9.09E-04	1.81E-04	1.81E-04	6.60E-04
LLI WALL	G	1.35E-04	2.73E-03	5.79E-04	2.70E-03	1.24E-03	2.01E-02	4.00E-04	1.37E-04	3.40E-05	3.40E-05	6.81E-04
	B	0.0	0.0	0.0	0.0	0.0	1.80E-02	0.0	0.0	0.0	0.0	0.0
	T	1.35E-04	2.73E-03	5.79E-04	2.70E-03	1.24E-03	3.81E-02	4.00E-04	1.37E-04	3.40E-05	3.40E-05	6.81E-04
KIDNEYS	G	4.25E-03	1.84E-04	1.31E-03	1.21E-03	1.15E-03	3.88E-04	2.82E-02	1.49E-03	4.38E-04	4.38E-04	5.87E-04
	B	0.0	0.0	0.0	0.0	0.0	0.0	1.57E-02	0.0	0.0	0.0	0.0
	T	4.25E-03	1.84E-04	1.31E-03	1.21E-03	1.15E-03	3.88E-04	4.39E-02	1.49E-03	4.38E-04	4.38E-04	5.87E-04
LIVER	G	1.89E-03	1.27E-04	8.00E-04	7.53E-04	1.01E-03	1.79E-04	1.52E-03	9.94E-03	9.54E-04	9.54E-04	4.57E-04
	B	0.0	0.0	0.0	0.0	0.0	0.0	0.0	2.70E-03	0.0	0.0	0.0
	T	1.89E-03	1.27E-04	8.00E-04	7.53E-04	1.01E-03	1.79E-04	1.52E-03	1.26E-02	9.54E-04	9.54E-04	4.57E-04
LUNGS	G	9.68E-04	3.78E-05	7.19E-04	1.43E-04	1.80E-04	7.03E-05	4.00E-04	9.99E-04	5.68E-03	5.68E-03	5.34E-04
	B	0.0	0.0	0.0	0.0	0.0	0.0	0.0	0.0	4.86E-03	4.86E-03	0.0
	T	9.68E-04	3.78E-05	7.19E-04	1.43E-04	1.80E-04	7.03E-05	4.00E-04	9.99E-04	1.05E-02	1.05E-02	5.34E-04
RESP LYM NODE	G	9.68E-04	3.78E-05	7.19E-04	1.43E-04	1.80E-04	7.03E-05	4.00E-04	9.99E-04	5.68E-03	5.68E-03	5.34E-04
	B	0.0	0.0	0.0	0.0	0.0	0.0	0.0	0.0	4.86E-03	3.24E-01	0.0
	T	9.68E-04	3.78E-05	7.19E-04	1.43E-04	1.80E-04	7.03E-05	4.00E-04	9.99E-04	1.05E-02	3.30E-01	5.34E-04
MUSCLE*	G	6.20E-04	7.12E-04	5.75E-04	6.23E-04	5.98E-04	6.81E-04	5.87E-04	4.57E-04	5.34E-04	5.34E-04	6.17E-04
	B	0.0	0.0	0.0	0.0	0.0	0.0	0.0	0.0	0.0	0.0	1.74E-04
	T	6.20E-04	7.12E-04	5.75E-04	6.23E-04	5.98E-04	6.81E-04	5.87E-04	4.57E-04	5.34E-04	5.34E-04	7.90E-04
OVARIES	G	1.30E-04	2.37E-03	5.15E-04	3.63E-03	2.67E-03	6.72E-03	5.89E-04	3.81E-04	7.44E-05	7.44E-05	7.93E-04
	B	0.0	0.0	0.0	0.0	0.0	0.0	0.0	0.0	0.0	0.0	0.0
	T	1.30E-04	2.37E-03	5.15E-04	3.63E-03	2.67E-03	6.72E-03	5.89E-04	3.81E-04	7.44E-05	7.44E-05	7.93E-04

27-COBALT-60 CONTINUED

S O U R C E O R G A N S

TARGET ORGANS		ADRENALS	BLAD CON	S CONT	SI+CONT	ULI CONT	LLI CONT	KIDNEYS	LIVER	LUNG	RESP LYM NODE	MUSCLE*
PANCREAS	G	3.47E-03	1.15E-04	6.59E-03	7.41E-04	8.41E-04	2.83E-04	2.68E-03	1.64E-03	9.38E-04	9.38E-04	7.13E-04
	B	0.0	0.0	0.0	0.0	0.0	0.0	0.0	0.0	0.0	0.0	0.0
	T	3.47E-03	1.15E-04	6.59E-03	7.41E-04	8.41E-04	2.83E-04	2.68E-03	1.64E-03	9.38E-04	9.38E-04	7.13E-04
SKELETON BONE	G	5.36E-04	2.24E-04	2.35E-04	3.12E-04	2.78E-04	4.01E-04	3.89E-04	2.91E-04	3.86E-04	3.86E-04	4.61E-04
	B	0.0	0.0	0.0	0.0	0.0	0.0	0.0	0.0	0.0	0.0	0.0
	T	5.36E-04	2.24E-04	2.35E-04	3.12E-04	2.78E-04	4.01E-04	3.89E-04	2.91E-04	3.86E-04	3.86E-04	4.61E-04
R MARROW	G	9.43E-04	4.60E-04	3.89E-04	9.49E-04	7.97E-04	1.18E-03	9.72E-04	4.14E-04	4.93E-04	4.93E-04	5.19E-04
	B	0.0	0.0	0.0	0.0	0.0	0.0	0.0	0.0	0.0	0.0	0.0
	T	9.43E-04	4.60E-04	3.89E-04	9.49E-04	7.97E-04	1.18E-03	9.72E-04	4.14E-04	4.93E-04	4.93E-04	5.19E-04
Y MARROW	G	5.22E-04	2.06E-04	3.30E-04	4.25E-04	3.93E-04	4.96E-04	4.80E-04	4.35E-04	4.00E-04	4.00E-04	4.25E-04
	B	0.0	0.0	0.0	0.0	0.0	0.0	0.0	0.0	0.0	0.0	0.0
	T	5.22E-04	2.06E-04	3.30E-04	4.25E-04	3.93E-04	4.96E-04	4.80E-04	4.35E-04	4.00E-04	4.00E-04	4.25E-04
T E CL	G	5.36E-04	2.24E-04	2.35E-04	3.12E-04	2.78E-04	4.01E-04	3.89E-04	2.91E-04	3.86E-04	3.86E-04	4.61E-04
	B	0.0	0.0	0.0	0.0	0.0	0.0	0.0	0.0	0.0	0.0	0.0
	T	5.36E-04	2.24E-04	2.35E-04	3.12E-04	2.78E-04	4.01E-04	3.89E-04	2.91E-04	3.86E-04	3.86E-04	4.61E-04
SKIN	G	3.12E-04	2.92E-04	2.58E-04	2.50E-04	2.38E-04	2.74E-04	2.79E-04	2.63E-04	2.91E-04	2.91E-04	3.91E-04
	B	0.0	0.0	0.0	0.0	0.0	0.0	0.0	0.0	0.0	0.0	0.0
	T	3.12E-04	2.92E-04	2.58E-04	2.50E-04	2.38E-04	2.74E-04	2.79E-04	2.63E-04	2.91E-04	2.91E-04	3.91E-04
SPLEEN	G	2.33E-03	9.51E-05	3.73E-03	6.62E-04	5.95E-04	4.22E-04	3.27E-03	4.32E-04	7.96E-04	7.96E-04	5.98E-04
	B	0.0	0.0	0.0	0.0	0.0	0.0	0.0	0.0	0.0	0.0	0.0
	T	2.33E-03	9.51E-05	3.73E-03	6.62E-04	5.95E-04	4.22E-04	3.27E-03	4.32E-04	7.96E-04	7.96E-04	5.98E-04
TESTES	G	4.04E-05	1.82E-03	7.45E-05	2.38E-04	2.05E-04	6.20E-04	7.49E-05	8.53E-05	1.70E-05	1.70E-05	5.15E-04
	B	0.0	0.0	0.0	0.0	0.0	0.0	0.0	0.0	0.0	0.0	0.0
	T	4.04E-05	1.82E-03	7.45E-05	2.38E-04	2.05E-04	6.20E-04	7.49E-05	8.53E-05	1.70E-05	1.70E-05	5.15E-04
THYMUS	G	2.59E-04	2.13E-05	3.27E-04	6.99E-05	7.52E-05	3.37E-05	9.13E-05	3.01E-04	1.74E-03	1.74E-03	7.43E-04
	B	0.0	0.0	0.0	0.0	0.0	0.0	0.0	0.0	0.0	0.0	0.0
	T	2.59E-04	2.13E-05	3.27E-04	6.99E-05	7.52E-05	3.37E-05	9.13E-05	3.01E-04	1.74E-03	1.74E-03	7.43E-04
THYROID	G	1.01E-04	8.36E-06	7.54E-05	2.53E-05	2.67E-05	1.33E-05	5.11E-05	8.76E-05	4.70E-04	4.70E-04	5.53E-04
	B	0.0	0.0	0.0	0.0	0.0	0.0	0.0	0.0	0.0	0.0	0.0
	T	1.01E-04	8.36E-06	7.54E-05	2.53E-05	2.67E-05	1.33E-05	5.11E-05	8.76E-05	4.70E-04	4.70E-04	5.53E-04
UTERUS	G	2.03E-04	5.53E-03	4.16E-04	3.28E-03	1.97E-03	2.29E-03	4.13E-04	2.16E-04	8.64E-05	8.64E-05	9.03E-04
	B	0.0	0.0	0.0	0.0	0.0	0.0	0.0	0.0	0.0	0.0	0.0
	T	2.03E-04	5.53E-03	4.16E-04	3.28E-03	1.97E-03	2.29E-03	4.13E-04	2.16E-04	8.64E-05	8.64E-05	9.03E-04
T BODY	G	6.77E-04	7.42E-04	7.12E-04	7.79E-04	7.63E-04	7.59E-04	6.84E-04	6.81E-04	5.77E-04	5.77E-04	5.88E-04
	B	6.95E-05	7.81E-06	2.08E-05	5.56E-05	3.32E-05	4.12E-05	6.95E-05	6.95E-05	6.95E-05	6.95E-05	6.95E-05
	T	7.46E-04	7.50E-04	7.32E-04	8.35E-04	7.96E-04	8.00E-04	7.54E-04	7.50E-04	6.47E-04	6.47E-04	6.58E-04

CONTINUED NEXT PAGE

27-COBALT-60 CONTINUED

TARGET ORGANS		SOURCE ORGANS										
		OVARIES	PANCREAS	COR BONE	CAN BONE	R MARROW	Y MARROW	SKIN	SPLEEN	TESTES	THYROID	T BODY
ADRENALS	G	2.29E-04	2.92E-03	8.10E-04	8.10E-04	1.06E-03	3.81E-04	3.60E-04	2.75E-03	4.04E-05	9.44E-05	1.01E-03
	B	0.0	0.0	0.0	0.0	0.0	0.0	0.0	0.0	0.0	0.0	6.95E-05
	T	2.29E-04	2.92E-03	8.10E-04	8.10E-04	1.06E-03	3.81E-04	3.60E-04	2.75E-03	4.04E-05	9.44E-05	1.08E-03
BLAD WALL	G	2.76E-03	9.26E-05	2.54E-04	2.54E-04	4.82E-04	1.60E-04	3.42E-04	1.36E-04	1.99E-03	8.40E-06	7.92E-04
	B	0.0	0.0	0.0	0.0	0.0	0.0	0.0	0.0	0.0	0.0	6.95E-05
	T	2.76E-03	9.26E-05	2.54E-04	2.54E-04	4.82E-04	1.60E-04	3.42E-04	1.36E-04	1.99E-03	8.40E-06	8.61E-04
GI TRACT S WALL	G	3.68E-04	6.62E-03	2.35E-04	2.35E-04	4.79E-04	3.04E-04	2.73E-04	3.89E-03	4.37E-05	7.10E-05	6.10E-04
	B	0.0	0.0	0.0	0.0	0.0	0.0	0.0	0.0	0.0	0.0	6.95E-05
	T	3.68E-04	6.62E-03	2.35E-04	2.35E-04	4.79E-04	3.04E-04	2.73E-04	3.89E-03	4.37E-05	7.10E-05	6.80E-04
SI+CONT	G	4.41E-03	7.37E-04	3.29E-04	3.29E-04	1.01E-03	4.19E-04	2.52E-04	5.92E-04	2.28E-04	2.11E-05	7.77E-04
	B	0.0	0.0	0.0	0.0	0.0	0.0	0.0	0.0	0.0	0.0	6.95E-05
	T	4.41E-03	7.37E-04	3.29E-04	3.29E-04	1.01E-03	4.19E-04	2.52E-04	5.92E-04	2.28E-04	2.11E-05	8.47E-04
ULI WALL	G	4.19E-03	8.91E-04	3.16E-04	3.16E-04	7.59E-04	3.89E-04	2.57E-04	5.90E-04	1.63E-04	2.45E-05	7.26E-04
	B	0.0	0.0	0.0	0.0	0.0	0.0	0.0	0.0	0.0	0.0	6.95E-05
	T	4.19E-03	8.91E-04	3.16E-04	3.16E-04	7.59E-04	3.89E-04	2.57E-04	5.90E-04	1.63E-04	2.45E-05	7.96E-04
LLI WALL	G	5.29E-03	2.69E-04	4.22E-04	4.22E-04	1.16E-03	3.74E-04	2.66E-04	2.67E-04	9.76E-04	1.16E-05	7.84E-04
	B	0.0	0.0	0.0	0.0	0.0	0.0	0.0	0.0	0.0	0.0	6.95E-05
	T	5.29E-03	2.69E-04	4.22E-04	4.22E-04	1.16E-03	3.74E-04	2.66E-04	2.67E-04	9.76E-04	1.16E-05	8.54E-04
KIDNEYS	G	4.44E-04	2.40E-03	4.58E-04	4.58E-04	1.01E-03	4.76E-04	3.18E-04	3.29E-03	6.86E-05	6.49E-05	6.89E-04
	B	0.0	0.0	0.0	0.0	0.0	0.0	0.0	0.0	0.0	0.0	6.95E-05
	T	4.44E-04	2.40E-03	4.58E-04	4.58E-04	1.01E-03	4.76E-04	3.18E-04	3.29E-03	6.86E-05	6.49E-05	7.59E-04
LIVER	G	2.76E-04	1.60E-03	3.01E-04	3.01E-04	4.24E-04	4.58E-04	2.85E-04	4.47E-04	4.98E-05	8.86E-05	6.99E-04
	B	0.0	0.0	0.0	0.0	0.0	0.0	0.0	0.0	0.0	0.0	6.95E-05
	T	2.76E-04	1.60E-03	3.01E-04	3.01E-04	4.24E-04	4.58E-04	2.85E-04	4.47E-04	4.98E-05	8.86E-05	7.68E-04
LUNGS	G	7.06E-05	9.08E-04	4.04E-04	4.04E-04	5.12E-04	4.30E-04	3.01E-04	8.36E-04	1.68E-05	4.59E-04	5.51E-04
	B	0.0	0.0	0.0	0.0	0.0	0.0	0.0	0.0	0.0	0.0	6.95E-05
	T	7.06E-05	9.08E-04	4.04E-04	4.04E-04	5.12E-04	4.30E-04	3.01E-04	8.36E-04	1.68E-05	4.59E-04	6.21E-04
RESP LYM NODE	G	7.06E-05	9.08E-04	4.04E-04	4.04E-04	5.12E-04	4.30E-04	3.01E-04	8.36E-04	1.68E-05	4.59E-04	5.51E-04
	B	0.0	0.0	0.0	0.0	0.0	0.0	0.0	0.0	0.0	0.0	6.95E-05
	T	7.06E-05	9.08E-04	4.04E-04	4.04E-04	5.12E-04	4.30E-04	3.01E-04	8.36E-04	1.68E-05	4.59E-04	6.21E-04
MUSCLE*	G	7.93E-04	7.13E-04	4.61E-04	4.61E-04	5.36E-04	4.22E-04	3.91E-04	5.98E-04	5.15E-04	5.53E-04	5.88E-04
	B	0.0	0.0	0.0	0.0	0.0	0.0	0.0	0.0	0.0	0.0	6.95E-05
	T	7.93E-04	7.13E-04	4.61E-04	4.61E-04	5.36E-04	4.22E-04	3.91E-04	5.98E-04	5.15E-04	5.53E-04	6.58E-04
OVARIES	G	3.01E-01	3.73E-04	3.80E-04	3.80E-04	1.27E-03	3.88E-04	2.47E-04	2.49E-04	1.18E-48	1.37E-05	6.94E-04
	B	4.42E-01	0.0	0.0	0.0	0.0	0.0	0.0	0.0	0.0	0.0	6.95E-05
	T	7.43E-01	3.73E-04	3.80E-04	3.80E-04	1.27E-03	3.88E-04	2.47E-04	2.49E-04	1.18E-48	1.37E-05	7.64E-04

27-COBALT-60 CONTINUED

TARGET ORGANS		SOURCE ORGANS										
		OVARIES	PANCREAS	COR BONE	CAN BONE	R MARROW	Y MARROW	SKIN	SPLEEN	TESTES	THYROID	T BODY
PANCREAS	G	3.14E-04	8.36E-02	4.49E-04	4.49E-04	4.87E-04	4.26E-04	2.18E-04	6.99E-03	5.21E-05	1.10E-04	6.52E-04
	B	0.0	4.86E-02	0.0	0.0	0.0	0.0	0.0	0.0	0.0	0.0	6.95E-05
	T	3.14E-04	1.32E-01	4.49E-04	4.49E-04	4.87E-04	4.26E-04	2.18E-04	6.99E-03	5.21E-05	1.10E-04	7.21E-04
SKELETON BONE	G	3.56E-04	3.61E-04	1.36E-03	1.36E-03	9.03E-04	1.02E-03	3.57E-04	3.10E-04	2.65E-04	3.03E-04	5.77E-04
	B	0.0	0.0	9.73E-04	7.81E-04	1.28E-04	0.0	0.0	0.0	0.0	0.0	6.95E-05
	T	3.56E-04	3.61E-04	2.33E-03	2.14E-03	1.03E-03	1.02E-03	3.57E-04	3.10E-04	2.65E-04	3.03E-04	6.46E-04
R MARROW	G	1.14E-03	6.71E-04	1.23E-03	1.23E-03	2.85E-03	1.04E-03	3.35E-04	4.47E-04	2.04E-04	3.28E-04	6.32E-04
	B	0.0	0.0	6.43E-06	6.39E-04	2.82E-03	0.0	0.0	0.0	0.0	0.0	6.95E-05
	T	1.14E-03	6.71E-04	1.24E-03	1.87E-03	5.67E-03	1.04E-03	3.35E-04	4.47E-04	2.04E-04	3.28E-04	7.01E-04
Y MARROW	G	4.67E-04	4.27E-04	1.17E-03	1.17E-03	1.11E-03	1.72E-03	3.80E-04	4.59E-04	1.19E-04	1.68E-04	5.36E-04
	B	0.0	0.0	0.0	0.0	0.0	3.24E-03	0.0	0.0	0.0	0.0	6.95E-05
	T	4.67E-04	4.27E-04	1.17E-03	1.17E-03	1.11E-03	4.96E-03	3.80E-04	4.59E-04	1.19E-04	1.68E-04	6.05E-04
T E CL	G	3.56E-04	3.61E-04	1.36E-03	1.36E-03	1.21E-03	1.12E-03	3.57E-04	3.10E-04	2.65E-04	3.03E-04	5.77E-04
	B	0.0	0.0	5.50E-04	1.13E-03	8.66E-04	8.10E-04	0.0	0.0	0.0	0.0	6.95E-05
	T	3.56E-04	3.61E-04	1.91E-03	2.49E-03	2.08E-03	1.93E-03	3.57E-04	3.10E-04	2.65E-04	3.03E-04	6.46E-04
SKIN	G	2.34E-04	2.34E-04	3.66E-04	3.66E-04	3.21E-04	3.91E-04	8.51E-04	2.69E-04	6.57E-04	3.86E-04	4.02E-04
	B	0.0	0.0	0.0	0.0	0.0	0.0	1.87E-03	0.0	0.0	0.0	6.95E-05
	T	2.34E-04	2.34E-04	3.66E-04	3.66E-04	3.21E-04	3.91E-04	2.72E-03	2.69E-04	6.57E-04	3.86E-04	4.72E-04
SPLEEN	G	2.34E-04	7.11E-03	3.17E-04	3.17E-04	4.15E-04	4.94E-04	2.89E-04	5.03E-02	2.89E-05	8.63E-05	6.64E-04
	B	0.0	0.0	0.0	0.0	0.0	0.0	0.0	2.70E-02	0.0	0.0	6.95E-05
	T	2.34E-04	7.11E-03	3.17E-04	3.17E-04	4.15E-04	4.94E-04	2.89E-04	7.73E-02	2.89E-05	8.63E-05	7.33E-04
TESTES	G	1.18E-48	5.62E-05	2.95E-04	2.95E-04	1.25E-04	3.68E-04	3.94E-04	5.14E-05	1.40E-01	3.85E-06	6.77E-04
	B	0.0	0.0	0.0	0.0	0.0	0.0	0.0	0.0	1.39E-01	0.0	6.95E-05
	T	1.18E-48	5.62E-05	2.95E-04	2.95E-04	1.25E-04	3.68E-04	3.94E-04	5.14E-05	2.79E-01	3.85E-06	7.47E-04
THYMUS	G	3.58E-05	2.51E-04	2.69E-04	2.69E-04	3.55E-04	2.59E-04	2.78E-04	1.77E-04	9.39E-06	1.63E-03	6.56E-04
	B	0.0	0.0	0.0	0.0	0.0	0.0	0.0	0.0	0.0	0.0	6.95E-05
	T	3.58E-05	2.51E-04	2.69E-04	2.69E-04	3.55E-04	2.59E-04	2.78E-04	1.77E-04	9.39E-06	1.63E-03	7.25E-04
THYROID	G	1.37E-05	5.27E-05	3.52E-04	3.52E-04	3.36E-04	2.59E-04	3.01E-04	7.37E-05	3.84E-06	1.92E-01	5.91E-04
	B	0.0	0.0	0.0	0.0	0.0	0.0	0.0	0.0	0.0	2.43E-01	6.95E-05
	T	1.37E-05	5.27E-05	3.52E-04	3.52E-04	3.36E-04	2.59E-04	3.01E-04	7.37E-05	3.84E-06	4.35E-01	6.60E-04
UTERUS	G	6.51E-03	2.48E-04	3.27E-04	3.27E-04	6.83E-04	2.24E-04	2.99E-04	1.72E-04	1.18E-48	1.31E-05	8.26E-04
	B	0.0	0.0	0.0	0.0	0.0	0.0	0.0	0.0	0.0	0.0	6.95E-05
	T	6.51E-03	2.48E-04	3.27E-04	3.27E-04	6.83E-04	2.24E-04	2.99E-04	1.72E-04	1.18E-48	1.31E-05	8.95E-04
T BODY	G	7.90E-04	7.75E-04	5.84E-04	5.84E-04	6.43E-04	5.20E-04	3.92E-04	6.79E-04	5.86E-04	5.30E-04	5.83E-04
	B	6.95E-05	6.95E-05	6.95E-05	6.95E-05	6.95E-05	6.95E-05	6.95E-05	6.95E-05	6.95E-05	6.95E-05	6.95E-05
	T	8.59E-04	8.45E-04	6.53E-04	6.53E-04	7.12E-04	5.90E-04	4.61E-04	7.49E-04	6.55E-04	5.99E-04	6.53E-04

*"MUSCLE" VALUES MAY BE USED FOR "SEPARABLE FAT" WITH ADJUSTMENT (SEE TEXT)
PRINCIPLE REFERENCE-LEDERER, C. M. ET AL., TABLE OF ISOTOPES, 6TH ED.
DATE DECAY DATA REVIEWED-FEBRUARY 1972

S, AVERAGE DOSE EQUIVALENT PER UNIT ACCUMULATED ACTIVITY (REM/UCI-DAY), FOR 28-NICKEL-63 (TR=9.200E 01 YEARS)

DATE OF TABLE 11-27-74

TARGET ORGANS		SOURCE ORGANS										
		ADRENALS	BLAD CON	S CONT	SI+CONT	ULI CONT	LLI CONT	KIDNEYS	LIVER	LUNG	RESP LYM NODE	MUSCLE*
ADRENALS	B	6.27E-02	0.0	0.0	0.0	0.0	0.0	0.0	0.0	0.0	0.0	0.0
	T	6.27E-02	0.0	0.0	0.0	0.0	0.0	0.0	0.0	0.0	0.0	0.0
BLAD WALL	B	0.0	2.19E-03	0.0	0.0	0.0	0.0	0.0	0.0	0.0	0.0	0.0
	T	0.0	2.19E-03	0.0	0.0	0.0	0.0	0.0	0.0	0.0	0.0	0.0
GI TRACT S WALL	B	0.0	0.0	1.76E-03	0.0	0.0	0.0	0.0	0.0	0.0	0.0	0.0
	T	0.0	0.0	1.76E-03	0.0	0.0	0.0	0.0	0.0	0.0	0.0	0.0
SI+CONT	B	0.0	0.0	0.0	1.10E-03	0.0	0.0	0.0	0.0	0.0	0.0	0.0
	T	0.0	0.0	0.0	1.10E-03	0.0	0.0	0.0	0.0	0.0	0.0	0.0
ULI WALL	B	0.0	0.0	0.0	0.0	1.99E-03	0.0	0.0	0.0	0.0	0.0	0.0
	T	0.0	0.0	0.0	0.0	1.99E-03	0.0	0.0	0.0	0.0	0.0	0.0
LLI WALL	B	0.0	0.0	0.0	0.0	0.0	3.25E-03	0.0	0.0	0.0	0.0	0.0
	T	0.0	0.0	0.0	0.0	0.0	3.25E-03	0.0	0.0	0.0	0.0	0.0
KIDNEYS	B	0.0	0.0	0.0	0.0	0.0	0.0	2.83E-03	0.0	0.0	0.0	0.0
	T	0.0	0.0	0.0	0.0	0.0	0.0	2.83E-03	0.0	0.0	0.0	0.0
LIVER	B	0.0	0.0	0.0	0.0	0.0	0.0	0.0	4.88E-04	0.0	0.0	0.0
	T	0.0	0.0	0.0	0.0	0.0	0.0	0.0	4.88E-04	0.0	0.0	0.0
LUNGS	B	0.0	0.0	0.0	0.0	0.0	0.0	0.0	0.0	8.78E-04	8.78E-04	0.0
	T	0.0	0.0	0.0	0.0	0.0	0.0	0.0	0.0	8.78E-04	8.78E-04	0.0
RESP LYM NODE	B	0.0	0.0	0.0	0.0	0.0	0.0	0.0	0.0	0.0	5.85E-02	0.0
	T	0.0	0.0	0.0	0.0	0.0	0.0	0.0	0.0	0.0	5.85E-02	0.0
MUSCLE*	B	0.0	0.0	0.0	0.0	0.0	0.0	0.0	0.0	0.0	0.0	3.13E-05
	T	0.0	0.0	0.0	0.0	0.0	0.0	0.0	0.0	0.0	0.0	3.13E-05
OVARIES	B	0.0	0.0	0.0	0.0	0.0	0.0	0.0	0.0	0.0	0.0	0.0
	T	0.0	0.0	0.0	0.0	0.0	0.0	0.0	0.0	0.0	0.0	0.0

28-NICKEL-63 CONTINUED

S O U R C E O R G A N S

TARGET ORGANS		ADRENALS	BLAD CON	S CONT	SI+CONT	ULI CONT	LLI CONT	KIDNEYS	LIVER	LUNG	RESP LYM NODE	MUSCLE*
PANCREAS	B	0.0	0.0	0.0	0.0	0.0	0.0	0.0	0.0	0.0	0.0	0.0
	T	0.0	0.0	0.0	0.0	0.0	0.0	0.0	0.0	0.0	0.0	0.0
SKELETON BONE	B	0.0	0.0	0.0	0.0	0.0	0.0	0.0	0.0	0.0	0.0	0.0
	T	0.0	0.0	0.0	0.0	0.0	0.0	0.0	0.0	0.0	0.0	0.0
R MARROW	B	0.0	0.0	0.0	0.0	0.0	0.0	0.0	0.0	0.0	0.0	0.0
	T	0.0	0.0	0.0	0.0	0.0	0.0	0.0	0.0	0.0	0.0	0.0
Y MARROW	B	0.0	0.0	0.0	0.0	0.0	0.0	0.0	0.0	0.0	0.0	0.0
	T	0.0	0.0	0.0	0.0	0.0	0.0	0.0	0.0	0.0	0.0	0.0
T E CL	B	0.0	0.0	0.0	0.0	0.0	0.0	0.0	0.0	0.0	0.0	0.0
	T	0.0	0.0	0.0	0.0	0.0	0.0	0.0	0.0	0.0	0.0	0.0
SKIN	B	0.0	0.0	0.0	0.0	0.0	0.0	0.0	0.0	0.0	0.0	0.0
	T	0.0	0.0	0.0	0.0	0.0	0.0	0.0	0.0	0.0	0.0	0.0
SPLEEN	B	0.0	0.0	0.0	0.0	0.0	0.0	0.0	0.0	0.0	0.0	0.0
	T	0.0	0.0	0.0	0.0	0.0	0.0	0.0	0.0	0.0	0.0	0.0
TESTES	B	0.0	0.0	0.0	0.0	0.0	0.0	0.0	0.0	0.0	0.0	0.0
	T	0.0	0.0	0.0	0.0	0.0	0.0	0.0	0.0	0.0	0.0	0.0
THYMUS	B	0.0	0.0	0.0	0.0	0.0	0.0	0.0	0.0	0.0	0.0	0.0
	T	0.0	0.0	0.0	0.0	0.0	0.0	0.0	0.0	0.0	0.0	0.0
THYROID	B	0.0	0.0	0.0	0.0	0.0	0.0	0.0	0.0	0.0	0.0	0.0
	T	0.0	0.0	0.0	0.0	0.0	0.0	0.0	0.0	0.0	0.0	0.0
UTERUS	B	0.0	0.0	0.0	0.0	0.0	0.0	0.0	0.0	0.0	0.0	0.0
	T	0.0	0.0	0.0	0.0	0.0	0.0	0.0	0.0	0.0	0.0	0.0
T BODY	B	1.25E-05	1.41E-06	3.76E-06	1.00E-05	5.98E-06	7.43E-06	1.25E-05	1.25E-05	1.25E-05	1.25E-05	1.25E-05
	T	1.25E-05	1.41E-06	3.76E-06	1.00E-05	5.98E-06	7.43E-06	1.25E-05	1.25E-05	1.25E-05	1.25E-05	1.25E-05

CONTINUED NEXT PAGE

28-NICKEL-63 CONTINUED

TARGET ORGANS		SOURCE ORGANS										
		OVARIES	PANCREAS	COR BONE	CAN BONE	R MARROW	Y MARROW	SKIN	SPLEEN	TESTES	THYROID	T BODY
ADRENALS	B	0.0	0.0	0.0	0.0	0.0	0.0	0.0	0.0	0.0	0.0	1.25E-05
	T	0.0	0.0	0.0	0.0	0.0	0.0	0.0	0.0	0.0	0.0	1.25E-05
BLAD WALL	B	0.0	0.0	0.0	0.0	0.0	0.0	0.0	0.0	0.0	0.0	1.25E-05
	T	0.0	0.0	0.0	0.0	0.0	0.0	0.0	0.0	0.0	0.0	1.25E-05
GI TRACT S WALL	B	0.0	0.0	0.0	0.0	0.0	0.0	0.0	0.0	0.0	0.0	1.25E-05
	T	0.0	0.0	0.0	0.0	0.0	0.0	0.0	0.0	0.0	0.0	1.25E-05
SI+CONT	B	0.0	0.0	0.0	0.0	0.0	0.0	0.0	0.0	0.0	0.0	1.25E-05
	T	0.0	0.0	0.0	0.0	0.0	0.0	0.0	0.0	0.0	0.0	1.25E-05
ULI WALL	B	0.0	0.0	0.0	0.0	0.0	0.0	0.0	0.0	0.0	0.0	1.25E-05
	T	0.0	0.0	0.0	0.0	0.0	0.0	0.0	0.0	0.0	0.0	1.25E-05
LLI WALL	B	0.0	0.0	0.0	0.0	0.0	0.0	0.0	0.0	0.0	0.0	1.25E-05
	T	0.0	0.0	0.0	0.0	0.0	0.0	0.0	0.0	0.0	0.0	1.25E-05
KIDNEYS	B	0.0	0.0	0.0	0.0	0.0	0.0	0.0	0.0	0.0	0.0	1.25E-05
	T	0.0	0.0	0.0	0.0	0.0	0.0	0.0	0.0	0.0	0.0	1.25E-05
LIVER	B	0.0	0.0	0.0	0.0	0.0	0.0	0.0	0.0	0.0	0.0	1.25E-05
	T	0.0	0.0	0.0	0.0	0.0	0.0	0.0	0.0	0.0	0.0	1.25E-05
LUNGS	B	0.0	0.0	0.0	0.0	0.0	0.0	0.0	0.0	0.0	0.0	1.25E-05
	T	0.0	0.0	0.0	0.0	0.0	0.0	0.0	0.0	0.0	0.0	1.25E-05
RESP LYM NODE	B	0.0	0.0	0.0	0.0	0.0	0.0	0.0	0.0	0.0	0.0	1.25E-05
	T	0.0	0.0	0.0	0.0	0.0	0.0	0.0	0.0	0.0	0.0	1.25E-05
MUSCLE*	B	0.0	0.0	0.0	0.0	0.0	0.0	0.0	0.0	0.0	0.0	1.25E-05
	T	0.0	0.0	0.0	0.0	0.0	0.0	0.0	0.0	0.0	0.0	1.25E-05
OVARIES	B	7.98E-02	0.0	0.0	0.0	0.0	0.0	0.0	0.0	0.0	0.0	1.25E-05
	T	7.98E-02	0.0	0.0	0.0	0.0	0.0	0.0	0.0	0.0	0.0	1.25E-05

28-NICKEL-63 CONTINUED

TARGET ORGANS		SOURCE ORGANS										
		OVARIES	PANCREAS	COR BONE	CAN BONE	R MARROW	Y MARROW	SKIN	SPLEEN	TESTES	THYROID	T BODY
PANCREAS	B	0.0	8.78E-03	0.0	0.0	0.0	0.0	0.0	0.0	0.0	0.0	1.25E-05
	T	0.0	8.78E-03	0.0	0.0	0.0	0.0	0.0	0.0	0.0	0.0	1.25E-05
SKELETON BONE	B	0.0	0.0	1.76E-04	1.70E-04	3.59E-06	0.0	0.0	0.0	0.0	0.0	1.25E-05
	T	0.0	0.0	1.76E-04	1.70E-04	3.59E-06	0.0	0.0	0.0	0.0	0.0	1.25E-05
R MARROW	B	0.0	0.0	1.40E-07	1.79E-05	5.73E-04	0.0	0.0	0.0	0.0	0.0	1.25E-05
	T	0.0	0.0	1.40E-07	1.79E-05	5.73E-04	0.0	0.0	0.0	0.0	0.0	1.25E-05
Y MARROW	B	0.0	0.0	0.0	0.0	0.0	5.85E-04	0.0	0.0	0.0	0.0	1.25E-05
	T	0.0	0.0	0.0	0.0	0.0	5.85E-04	0.0	0.0	0.0	0.0	1.25E-05
T E CL	B	0.0	0.0	2.98E-05	6.24E-05	2.51E-04	1.46E-04	0.0	0.0	0.0	0.0	1.25E-05
	T	0.0	0.0	2.98E-05	6.24E-05	2.51E-04	1.46E-04	0.0	0.0	0.0	0.0	1.25E-05
SKIN	B	0.0	0.0	0.0	0.0	0.0	0.0	3.38E-04	0.0	0.0	0.0	1.25E-05
	T	0.0	0.0	0.0	0.0	0.0	0.0	3.38E-04	0.0	0.0	0.0	1.25E-05
SPLEEN	B	0.0	0.0	0.0	0.0	0.0	0.0	0.0	4.88E-03	0.0	0.0	1.25E-05
	T	0.0	0.0	0.0	0.0	0.0	0.0	0.0	4.88E-03	0.0	0.0	1.25E-05
TESTES	B	0.0	0.0	0.0	0.0	0.0	0.0	0.0	0.0	2.51E-02	0.0	1.25E-05
	T	0.0	0.0	0.0	0.0	0.0	0.0	0.0	0.0	2.51E-02	0.0	1.25E-05
THYMUS	B	0.0	0.0	0.0	0.0	0.0	0.0	0.0	0.0	0.0	0.0	1.25E-05
	T	0.0	0.0	0.0	0.0	0.0	0.0	0.0	0.0	0.0	0.0	1.25E-05
THYROID	B	0.0	0.0	0.0	0.0	0.0	0.0	0.0	0.0	0.0	4.39E-02	1.25E-05
	T	0.0	0.0	0.0	0.0	0.0	0.0	0.0	0.0	0.0	4.39E-02	1.25E-05
UTERUS	B	0.0	0.0	0.0	0.0	0.0	0.0	0.0	0.0	0.0	0.0	1.25E-05
	T	0.0	0.0	0.0	0.0	0.0	0.0	0.0	0.0	0.0	0.0	1.25E-05
T BODY	B	1.25E-05	1.25E-05	1.25E-05	1.25E-05	1.25E-05	1.25E-05	1.25E-05	1.25E-05	1.25E-05	1.25E-05	1.25E-05
	T	1.25E-05	1.25E-05	1.25E-05	1.25E-05	1.25E-05	1.25E-05	1.25E-05	1.25E-05	1.25E-05	1.25E-05	1.25E-05

*"MUSCLE" VALUES MAY BE USED FOR "SEPARABLE FAT" WITH ADJUSTMENT (SEE TEXT)
PRINCIPLE REFERENCE-NUCLEAR DATA, VOL. 2, NO. 3, OCTOBER (1967)
DATE DECAY DATA REVIEWED-JULY 1969

S, AVERAGE DOSE EQUIVALENT PER UNIT ACCUMULATED ACTIVITY (REM/UCI-DAY), FOR 29-COPPER-64 (TR=1.280E 01 HOURS)

DATE OF TABLE 11-27-74

TARGET ORGANS		SOURCE ORGANS										
		ADRENALS	BLAD CON	S CONT	SI+CONT	ULI CONT	LLI CONT	KIDNEYS	LIVER	LUNG	RESP LYM NODE	MUSCLE*
ADRENALS	G	1.94E-02	8.39E-06	7.76E-05	4.44E-05	3.65E-05	1.78E-05	4.47E-04	1.75E-04	8.73E-05	8.73E-05	5.52E-05
	B	4.77E-01	0.0	0.0	0.0	0.0	0.0	0.0	0.0	0.0	0.0	0.0
	T	4.96E-01	8.39E-06	7.76E-05	4.44E-05	3.65E-05	1.78E-05	4.47E-04	1.75E-04	8.73E-05	8.73E-05	5.52E-05
BLAD WALL	G	4.18E-06	2.70E-03	1.66E-05	1.22E-04	6.83E-05	2.02E-04	1.40E-05	1.23E-05	2.72E-06	2.72E-06	6.40E-05
	B	0.0	1.67E-02	0.0	0.0	0.0	0.0	0.0	0.0	0.0	0.0	0.0
	T	4.18E-06	1.94E-02	1.66E-05	1.22E-04	6.83E-05	2.02E-04	1.40E-05	1.23E-05	2.72E-06	2.72E-06	6.40E-05
GI TRACT S WALL	G	1.06E-04	1.19E-05	1.88E-03	1.22E-04	1.29E-04	6.46E-05	1.20E-04	6.81E-05	6.63E-05	6.63E-05	5.06E-05
	B	0.0	0.0	1.34E-02	0.0	0.0	0.0	0.0	0.0	0.0	0.0	0.0
	T	1.06E-04	1.19E-05	1.52E-02	1.22E-04	1.29E-04	6.46E-05	1.20E-04	6.81E-05	6.63E-05	6.63E-05	5.06E-05
SI+CONT	G	3.47E-05	9.39E-05	9.45E-05	1.14E-03	5.84E-04	3.20E-04	9.87E-05	5.70E-05	1.01E-05	1.01E-05	5.58E-05
	B	0.0	0.0	0.0	8.35E-03	0.0	0.0	0.0	0.0	0.0	0.0	0.0
	T	3.47E-05	9.39E-05	9.45E-05	9.49E-03	5.84E-04	3.20E-04	9.87E-05	5.70E-05	1.01E-05	1.01E-05	5.58E-05
ULI WALL	G	3.77E-05	8.47E-05	1.19E-04	8.35E-04	1.55E-03	1.52E-04	1.04E-04	9.18E-05	1.39E-05	1.39E-05	5.88E-05
	B	0.0	0.0	0.0	0.0	1.52E-02	0.0	0.0	0.0	0.0	0.0	0.0
	T	3.77E-05	8.47E-05	1.19E-04	8.35E-04	1.67E-02	1.52E-04	1.04E-04	9.18E-05	1.39E-05	1.39E-05	5.88E-05
LLI WALL	G	1.28E-05	2.54E-04	4.58E-05	2.43E-04	1.08E-04	1.87E-03	3.19E-05	1.17E-05	2.83E-06	2.83E-06	6.10E-05
	B	0.0	0.0	0.0	0.0	0.0	2.47E-02	0.0	0.0	0.0	0.0	0.0
	T	1.28E-05	2.54E-04	4.58E-05	2.43E-04	1.08E-04	2.66E-02	3.19E-05	1.17E-05	2.83E-06	2.83E-06	6.10E-05
KIDNEYS	G	4.11E-04	1.40E-05	1.18E-04	1.14E-04	9.77E-05	2.99E-05	2.81E-03	1.35E-04	3.78E-05	3.78E-05	5.16E-05
	B	0.0	0.0	0.0	0.0	0.0	0.0	2.15E-02	0.0	0.0	0.0	0.0
	T	4.11E-04	1.40E-05	1.18E-04	1.14E-04	9.77E-05	2.99E-05	2.43E-02	1.35E-04	3.78E-05	3.78E-05	5.16E-05
LIVER	G	1.76E-04	1.03E-05	7.32E-05	6.49E-05	8.84E-05	1.27E-05	1.43E-04	9.51E-04	8.55E-05	8.55E-05	4.03E-05
	B	0.0	0.0	0.0	0.0	0.0	0.0	0.0	3.71E-03	0.0	0.0	0.0
	T	1.76E-04	1.03E-05	7.32E-05	6.49E-05	8.84E-05	1.27E-05	1.43E-04	4.66E-03	8.55E-05	8.55E-05	4.03E-05
LUNGS	G	8.36E-05	1.82E-06	6.68E-05	1.21E-05	1.24E-05	3.79E-06	3.43E-05	8.62E-05	5.68E-04	5.68E-04	4.84E-05
	B	0.0	0.0	0.0	0.0	0.0	0.0	0.0	0.0	6.68E-03	6.68E-03	0.0
	T	8.36E-05	1.82E-06	6.68E-05	1.21E-05	1.24E-05	3.79E-06	3.43E-05	8.62E-05	7.25E-03	7.25E-03	4.84E-05
RESP LYM NODE	G	8.36E-05	1.82E-06	6.68E-05	1.21E-05	1.24E-05	3.79E-06	3.43E-05	8.62E-05	5.55E-04	5.68E-04	4.84E-05
	B	0.0	0.0	0.0	0.0	0.0	0.0	0.0	0.0	6.57E-03	4.45E-01	0.0
	T	8.36E-05	1.82E-06	6.68E-05	1.21E-05	1.24E-05	3.79E-06	3.43E-05	8.62E-05	7.13E-03	4.46E-01	4.84E-05
MUSCLE*	G	5.52E-05	6.40E-05	5.06E-05	5.58E-05	5.33E-05	6.10E-05	5.16E-05	4.03E-05	4.84E-05	4.84E-05	5.55E-05
	B	0.0	0.0	0.0	0.0	0.0	0.0	0.0	0.0	0.0	0.0	2.39E-04
	T	5.52E-05	6.40E-05	5.06E-05	5.58E-05	5.33E-05	6.10E-05	5.16E-05	4.03E-05	4.84E-05	4.84E-05	2.94E-04
OVARIES	G	1.92E-05	2.25E-04	1.94E-05	3.15E-04	4.47E-04	5.70E-04	4.20E-05	8.30E-06	5.57E-06	5.57E-06	7.17E-05
	B	0.0	0.0	0.0	0.0	0.0	0.0	0.0	0.0	0.0	0.0	0.0
	T	1.92E-05	2.25E-04	1.94E-05	3.15E-04	4.47E-04	5.70E-04	4.20E-05	8.30E-06	5.57E-06	5.57E-06	7.17E-05

29-COPPER-64 CONTINUED

TARGET ORGANS		SOURCE ORGANS										
		ADRENALS	BLAD CON	S CONT	SI+CONT	ULI CONT	LLI CONT	KIDNEYS	LIVER	LUNG	RESP LYM NODE	MUSCLE*
PANCREAS	G	3.02E-04	9.38E-06	6.27E-04	7.45E-05	6.45E-05	2.68E-05	2.36E-04	1.72E-04	9.96E-05	9.96E-05	6.48E-05
	B	0.0	0.0	0.0	0.0	0.0	0.0	0.0	0.0	0.0	0.0	0.0
	T	3.02E-04	9.38E-06	6.27E-04	7.45E-05	6.45E-05	2.68E-05	2.36E-04	1.72E-04	9.96E-05	9.96E-05	6.48E-05
SKELETON BONE	G	4.91E-05	2.11E-05	2.17E-05	2.82E-05	2.60E-05	3.74E-05	3.54E-05	2.64E-05	3.60E-05	3.60E-05	4.00E-05
	B	0.0	0.0	0.0	0.0	0.0	0.0	0.0	0.0	0.0	0.0	0.0
	T	4.91E-05	2.11E-05	2.17E-05	2.82E-05	2.60E-05	3.74E-05	3.54E-05	2.64E-05	3.60E-05	3.60E-05	4.00E-05
R MARROW	G	8.79E-05	4.50E-05	3.76E-05	8.94E-05	7.75E-05	1.12E-04	8.96E-05	3.88E-05	4.53E-05	4.53E-05	4.95E-05
	B	0.0	0.0	0.0	0.0	0.0	0.0	0.0	0.0	0.0	0.0	0.0
	T	8.79E-05	4.50E-05	3.76E-05	8.94E-05	7.75E-05	1.12E-04	8.96E-05	3.88E-05	4.53E-05	4.53E-05	4.95E-05
Y MARROW	G	4.74E-05	1.93E-05	3.02E-05	3.90E-05	3.69E-05	4.63E-05	4.40E-05	3.87E-05	3.79E-05	3.79E-05	4.04E-05
	B	0.0	0.0	0.0	0.0	0.0	0.0	0.0	0.0	0.0	0.0	0.0
	T	4.74E-05	1.93E-05	3.02E-05	3.90E-05	3.69E-05	4.63E-05	4.40E-05	3.87E-05	3.79E-05	3.79E-05	4.04E-05
T E CL	G	4.91E-05	2.11E-05	2.17E-05	2.82E-05	2.60E-05	3.74E-05	3.54E-05	2.64E-05	3.60E-05	3.60E-05	4.00E-05
	B	0.0	0.0	0.0	0.0	0.0	0.0	0.0	0.0	0.0	0.0	0.0
	T	4.91E-05	2.11E-05	2.17E-05	2.82E-05	2.60E-05	3.74E-05	3.54E-05	2.64E-05	3.60E-05	3.60E-05	4.00E-05
SKIN	G	2.47E-05	2.36E-05	2.14E-05	1.93E-05	2.01E-05	2.13E-05	2.40E-05	2.18E-05	2.46E-05	2.46E-05	3.31E-05
	B	0.0	0.0	0.0	0.0	0.0	0.0	0.0	0.0	0.0	0.0	0.0
	T	2.47E-05	2.36E-05	2.14E-05	1.93E-05	2.01E-05	2.13E-05	2.40E-05	2.18E-05	2.46E-05	2.46E-05	3.31E-05
SPLEEN	G	2.30E-04	8.18E-06	3.41E-04	5.66E-05	4.45E-05	3.41E-05	2.98E-04	3.61E-05	7.62E-05	7.62E-05	5.30E-05
	B	0.0	0.0	0.0	0.0	0.0	0.0	0.0	0.0	0.0	0.0	0.0
	T	2.30E-04	8.18E-06	3.41E-04	5.66E-05	4.45E-05	3.41E-05	2.98E-04	3.61E-05	7.62E-05	7.62E-05	5.30E-05
TESTES	G	2.61E-06	1.82E-04	1.16E-06	1.34E-05	1.86E-05	7.35E-05	5.48E-06	4.31E-06	9.15E-07	9.15E-07	4.47E-05
	B	0.0	0.0	0.0	0.0	0.0	0.0	0.0	0.0	0.0	0.0	0.0
	T	2.61E-06	1.82E-04	1.16E-06	1.34E-05	1.86E-05	7.35E-05	5.48E-06	4.31E-06	9.15E-07	9.15E-07	4.47E-05
THYMUS	G	3.37E-05	1.19E-06	9.36E-06	5.10E-06	5.57E-06	2.15E-06	1.43E-05	4.73E-05	1.33E-04	1.33E-04	6.12E-05
	B	0.0	0.0	0.0	0.0	0.0	0.0	0.0	0.0	0.0	0.0	0.0
	T	3.37E-05	1.19E-06	9.36E-06	5.10E-06	5.57E-06	2.15E-06	1.43E-05	4.73E-05	1.33E-04	1.33E-04	6.12E-05
THYROID	G	7.24E-06	3.63E-07	5.56E-06	1.48E-06	1.59E-06	6.82E-07	3.48E-06	6.68E-06	4.34E-05	4.34E-05	4.98E-05
	B	0.0	0.0	0.0	0.0	0.0	0.0	0.0	0.0	0.0	0.0	0.0
	T	7.24E-06	3.63E-07	5.56E-06	1.48E-06	1.59E-06	6.82E-07	3.48E-06	6.68E-06	4.34E-05	4.34E-05	4.98E-05
UTERUS	G	1.37E-05	5.32E-04	3.25E-05	3.12E-04	1.61E-04	2.00E-04	3.03E-05	1.60E-05	3.65E-06	3.65E-06	6.92E-05
	B	0.0	0.0	0.0	0.0	0.0	0.0	0.0	0.0	0.0	0.0	0.0
	T	1.37E-05	5.32E-04	3.25E-05	3.12E-04	1.61E-04	2.00E-04	3.03E-05	1.60E-05	3.65E-06	3.65E-06	6.92E-05
T BODY	G	6.12E-05	6.80E-05	6.46E-05	7.11E-05	6.94E-05	6.89E-05	6.18E-05	6.20E-05	5.29E-05	5.29E-05	5.27E-05
	B	9.54E-05	1.07E-05	2.86E-05	7.63E-05	4.55E-05	5.65E-05	9.54E-05	9.54E-05	9.54E-05	9.54E-05	9.54E-05
	T	1.57E-04	7.87E-05	9.32E-05	1.47E-04	1.15E-04	1.25E-04	1.57E-04	1.57E-04	1.48E-04	1.48E-04	1.48E-04

CONTINUED NEXT PAGE

29-COPPER-64 CONTINUED

SOURCE ORGANS

TARGET ORGANS		OVARIES	PANCREAS	COR BONE	CAN BONE	R MARROW	Y MARROW	SKIN	SPLEEN	TESTES	THYROID	T BODY
ADRENALS	G	2.19E-05	3.03E-04	6.17E-05	6.17E-05	6.32E-05	3.84E-05	2.41E-05	2.18E-04	2.61E-06	7.21E-06	8.40E-05
	B	0.0	0.0	0.0	0.0	0.0	0.0	0.0	0.0	0.0	0.0	9.54E-05
	T	2.19E-05	3.03E-04	6.17E-05	6.17E-05	6.32E-05	3.84E-05	2.41E-05	2.18E-04	2.61E-06	7.21E-06	1.79E-04
BLAD WALL	G	2.40E-04	7.16E-06	2.38E-05	2.38E-05	2.52E-05	9.49E-06	2.30E-05	5.15E-06	1.83E-04	3.66E-07	6.62E-05
	B	0.0	0.0	0.0	0.0	0.0	0.0	0.0	0.0	0.0	0.0	9.54E-05
	T	2.40E-04	7.16E-06	2.38E-05	2.38E-05	2.52E-05	9.49E-06	2.30E-05	5.15E-06	1.83E-04	3.66E-07	1.62E-04
GI TRACT S WALL	G	3.04E-05	6.09E-04	2.11E-05	2.11E-05	3.60E-05	2.68E-05	2.34E-05	3.53E-04	4.23E-06	4.72E-06	6.45E-05
	B	0.0	0.0	0.0	0.0	0.0	0.0	0.0	0.0	0.0	0.0	9.54E-05
	T	3.04E-05	6.09E-04	2.11E-05	2.11E-05	3.60E-05	2.68E-05	2.34E-05	3.53E-04	4.23E-06	4.72E-06	1.60E-04
SI+CONT	G	4.24E-04	6.35E-05	2.90E-05	2.90E-05	9.67E-05	3.80E-05	2.00E-05	5.00E-05	1.94E-05	3.47E-07	7.19E-05
	B	0.0	0.0	0.0	0.0	0.0	0.0	0.0	0.0	0.0	0.0	9.54E-05
	T	4.24E-04	6.35E-05	2.90E-05	2.90E-05	9.67E-05	3.80E-05	2.00E-05	5.00E-05	1.94E-05	3.47E-07	1.67E-04
ULI WALL	G	3.98E-04	7.77E-05	2.53E-05	2.53E-05	7.42E-05	3.10E-05	2.11E-05	5.04E-05	1.17E-05	4.76E-07	7.10E-05
	B	0.0	0.0	0.0	0.0	0.0	0.0	0.0	0.0	0.0	0.0	9.54E-05
	T	3.98E-04	7.77E-05	2.53E-05	2.53E-05	7.42E-05	3.10E-05	2.11E-05	5.04E-05	1.17E-05	4.76E-07	1.66E-04
LLI WALL	G	5.08E-04	1.95E-05	3.41E-05	3.41E-05	1.11E-04	2.99E-05	2.18E-05	2.51E-05	1.02E-04	5.71E-07	7.21E-05
	B	0.0	0.0	0.0	0.0	0.0	0.0	0.0	0.0	0.0	0.0	9.54E-05
	T	5.08E-04	1.95E-05	3.41E-05	3.41E-05	1.11E-04	2.99E-05	2.18E-05	2.51E-05	1.02E-04	5.71E-07	1.67E-04
KIDNEYS	G	4.09E-05	2.23E-04	3.31E-05	3.31E-05	8.58E-05	4.39E-05	2.72E-05	3.05E-04	3.81E-06	1.98E-06	6.40E-05
	B	0.0	0.0	0.0	0.0	0.0	0.0	0.0	0.0	0.0	0.0	9.54E-05
	T	4.09E-05	2.23E-04	3.31E-05	3.31E-05	8.58E-05	4.39E-05	2.72E-05	3.05E-04	3.81E-06	1.98E-06	1.59E-04
LIVER	G	2.22E-05	1.47E-04	2.56E-05	2.56E-05	3.68E-05	3.95E-05	2.45E-05	3.87E-05	1.99E-06	5.85E-06	6.34E-05
	B	0.0	0.0	0.0	0.0	0.0	0.0	0.0	0.0	0.0	0.0	9.54E-05
	T	2.22E-05	1.47E-04	2.56E-05	2.56E-05	3.68E-05	3.95E-05	2.45E-05	3.87E-05	1.99E-06	5.85E-06	1.59E-04
LUNGS	G	4.18E-06	8.56E-05	3.54E-05	3.54E-05	4.34E-05	3.61E-05	2.46E-05	7.88E-05	5.68E-07	3.85E-05	5.64E-05
	B	0.0	0.0	0.0	0.0	0.0	0.0	0.0	0.0	0.0	0.0	9.54E-05
	T	4.18E-06	8.56E-05	3.54E-05	3.54E-05	4.34E-05	3.61E-05	2.46E-05	7.88E-05	5.68E-07	3.85E-05	1.52E-04
RESP LYM NODE	G	4.18E-06	8.56E-05	3.54E-05	3.54E-05	4.34E-05	3.61E-05	2.46E-05	7.88E-05	5.68E-07	3.85E-05	5.64E-05
	B	0.0	0.0	0.0	0.0	0.0	0.0	0.0	0.0	0.0	0.0	9.54E-05
	T	4.18E-06	8.56E-05	3.54E-05	3.54E-05	4.34E-05	3.61E-05	2.46E-05	7.88E-05	5.68E-07	3.85E-05	1.52E-04
MUSCLE*	G	7.17E-05	6.48E-05	4.00E-05	4.00E-05	4.72E-05	3.73E-05	3.31E-05	5.30E-05	4.47E-05	4.98E-05	5.27E-05
	B	0.0	0.0	0.0	0.0	0.0	0.0	0.0	0.0	0.0	0.0	9.54E-05
	T	7.17E-05	6.48E-05	4.00E-05	4.00E-05	4.72E-05	3.73E-05	3.31E-05	5.30E-05	4.47E-05	4.98E-05	1.48E-04
OVARIES	G	3.28E-02	1.45E-05	3.89E-05	3.89E-05	1.29E-04	3.06E-05	1.13E-05	3.77E-05	1.50E-45	6.80E-07	6.18E-05
	B	6.07E-01	0.0	0.0	0.0	0.0	0.0	0.0	0.0	0.0	0.0	9.54E-05
	T	6.40E-01	1.45E-05	3.89E-05	3.89E-05	1.29E-04	3.06E-05	1.13E-05	3.77E-05	1.50E-45	6.80E-07	1.57E-04

29-COPPER-64 CONTINUED

TARGET ORGANS		SOURCE ORGANS										
		OVARIES	PANCREAS	COR BONE	CAN BONE	R MARROW	Y MARROW	SKIN	SPLEEN	TESTES	THYROID	T BODY
PANCREAS	G	2.04E-05	8.41E-03	3.29E-05	3.29E-05	6.10E-05	4.70E-05	2.10E-05	6.96E-04	1.52E-06	2.80E-06	6.28E-05
	B	0.0	6.68E-02	0.0	0.0	0.0	0.0	0.0	0.0	0.0	0.0	9.54E-05
	T	2.04E-05	7.52E-02	3.29E-05	3.29E-05	6.10E-05	4.70E-05	2.10E-05	6.96E-04	1.52E-06	2.80E-06	1.58E-04
SKELETON BONE	G	3.31E-05	3.31E-05	1.30E-04	1.30E-04	8.59E-05	9.56E-05	3.07E-05	2.77E-05	2.38E-05	2.72E-05	5.41E-05
	B	0.0	0.0	1.34E-03	8.78E-04	3.05E-04	0.0	0.0	0.0	0.0	0.0	9.54E-05
	T	3.31E-05	3.31E-05	1.47E-03	1.01E-03	3.91E-04	9.56E-05	3.07E-05	2.77E-05	2.38E-05	2.72E-05	1.49E-04
R MARROW	G	1.10E-04	6.23E-05	1.15E-04	1.15E-04	2.86E-04	9.94E-05	2.86E-05	4.07E-05	1.89E-05	3.01E-05	6.00E-05
	B	0.0	0.0	2.46E-05	1.52E-03	3.44E-03	0.0	0.0	0.0	0.0	0.0	9.54E-05
	T	1.10E-04	6.23E-05	1.39E-04	1.64E-03	3.72E-03	9.94E-05	2.86E-05	4.07E-05	1.89E-05	3.01E-05	1.55E-04
Y MARROW	G	4.43E-05	3.88E-05	1.11E-04	1.11E-04	1.06E-04	1.72E-04	3.26E-05	4.16E-05	1.03E-05	1.45E-05	5.10E-05
	B	0.0	0.0	0.0	0.0	0.0	4.45E-03	0.0	0.0	0.0	0.0	9.54E-05
	T	4.43E-05	3.88E-05	1.11E-04	1.11E-04	1.06E-04	4.62E-03	3.26E-05	4.16E-05	1.03E-05	1.45E-05	1.46E-04
T E CL	G	3.31E-05	3.31E-05	1.28E-04	1.28E-04	1.21E-04	1.10E-04	3.07E-05	2.77E-05	2.38E-05	2.72E-05	5.46E-05
	B	0.0	0.0	8.31E-04	1.52E-03	1.22E-03	1.11E-03	0.0	0.0	0.0	0.0	9.54E-05
	T	3.31E-05	3.31E-05	9.59E-04	1.64E-03	1.34E-03	1.22E-03	3.07E-05	2.77E-05	2.38E-05	2.72E-05	1.50E-04
SKIN	G	1.91E-05	1.84E-05	3.15E-05	3.15E-05	2.71E-05	3.51E-05	8.56E-05	2.29E-05	5.74E-05	3.12E-05	3.32E-05
	B	0.0	0.0	0.0	0.0	0.0	0.0	2.57E-03	0.0	0.0	0.0	9.54E-05
	T	1.91E-05	1.84E-05	3.15E-05	3.15E-05	2.71E-05	3.51E-05	2.65E-03	2.29E-05	5.74E-05	3.12E-05	1.29E-04
SPLEEN	G	2.49E-05	6.86E-04	3.03E-05	3.03E-05	2.93E-05	3.56E-05	2.39E-05	4.98E-03	4.64E-06	4.77E-06	6.50E-05
	B	0.0	0.0	0.0	0.0	0.0	0.0	0.0	3.71E-02	0.0	0.0	9.54E-05
	T	2.49E-05	6.86E-04	3.03E-05	3.03E-05	2.93E-05	3.56E-05	2.39E-05	4.21E-02	4.64E-06	4.77E-06	1.60E-04
TESTES	G	1.50E-45	2.40E-06	2.10E-05	2.10E-05	1.54E-05	3.49E-05	3.02E-05	3.51E-06	1.42E-02	1.34E-07	6.83E-05
	B	0.0	0.0	0.0	0.0	0.0	0.0	0.0	0.0	1.91E-01	0.0	9.54E-05
	T	1.50E-45	2.40E-06	2.10E-05	2.10E-05	1.54E-05	3.49E-05	3.02E-05	3.51E-06	2.05E-01	1.34E-07	1.64E-04
THYMUS	G	2.26E-06	1.93E-05	2.74E-05	2.74E-05	1.68E-05	1.36E-05	3.09E-05	1.72E-05	4.23E-07	1.58E-04	5.54E-05
	B	0.0	0.0	0.0	0.0	0.0	0.0	0.0	0.0	0.0	0.0	9.54E-05
	T	2.26E-06	1.93E-05	2.74E-05	2.74E-05	1.68E-05	1.36E-05	3.09E-05	1.72E-05	4.23E-07	1.58E-04	1.51E-04
THYROID	G	6.80E-07	6.64E-06	3.97E-05	3.97E-05	3.25E-05	1.62E-05	3.01E-05	5.40E-06	1.34E-07	1.97E-02	5.27E-05
	B	0.0	0.0	0.0	0.0	0.0	0.0	0.0	0.0	0.0	3.34E-01	9.54E-05
	T	6.80E-07	6.64E-06	3.97E-05	3.97E-05	3.25E-05	1.62E-05	3.01E-05	5.40E-06	1.34E-07	3.54E-01	1.48E-04
UTERUS	G	6.43E-04	2.26E-05	2.11E-05	2.11E-05	6.84E-05	2.38E-05	2.08E-05	1.68E-05	1.50E-45	6.46E-07	6.39E-05
	B	0.0	0.0	0.0	0.0	0.0	0.0	0.0	0.0	0.0	0.0	9.54E-05
	T	6.43E-04	2.26E-05	2.11E-05	2.11E-05	6.84E-05	2.38E-05	2.08E-05	1.68E-05	1.50E-45	6.46E-07	1.59E-04
T BODY	G	7.26E-05	7.12E-05	5.23E-05	5.23E-05	5.81E-05	4.70E-05	3.37E-05	6.16E-05	5.22E-05	4.78E-05	5.27E-05
	B	9.54E-05	9.54E-05	9.54E-05	9.54E-05	9.54E-05	9.54E-05	9.54E-05	9.54E-05	9.54E-05	9.54E-05	9.54E-05
	T	1.68E-04	1.67E-04	1.48E-04	1.48E-04	1.54E-04	1.42E-04	1.29E-04	1.57E-04	1.48E-04	1.43E-04	1.48E-04

*"MUSCLE" VALUES MAY BE USED FOR "SEPARABLE FAT" WITH ADJUSTMENT (SEE TEXT)
PRINCIPLE REFERENCE-NUCLEAR DATA, B2, 66 (1967)
DATE DECAY DATA REVIEWED-SEPTEMBER 1971

S, AVERAGE DOSE EQUIVALENT PER UNIT ACCUMULATED ACTIVITY (REM/UCI-DAY), FOR 30-ZINC-65 (TR=2.438E 02 DAYS)

DATE OF TABLE 11-27-74

TARGET ORGANS		SOURCE ORGANS										
		ADRENALS	BLAD CON	S CONT	SI+CONT	ULI CONT	LLI CONT	KIDNEYS	LIVER	LUNG	RESP LYM NODE	MUSCLE*
ADRENALS	G	5.19E-02	2.49E-05	2.38E-04	1.14E-04	1.18E-04	4.81E-05	1.16E-03	4.51E-04	2.18E-04	2.18E-04	1.47E-04
	B	2.68E-02	0.0	0.0	0.0	0.0	0.0	0.0	0.0	0.0	0.0	0.0
	T	7.87E-02	2.49E-05	2.38E-04	1.14E-04	1.18E-04	4.81E-05	1.16E-03	4.51E-04	2.18E-04	2.18E-04	1.47E-04
BLAD WALL	G	2.51E-05	6.62E-03	4.78E-05	2.31E-04	1.94E-04	5.09E-04	4.61E-05	1.95E-05	9.27E-06	9.27E-06	1.68E-04
	B	0.0	9.36E-04	0.0	0.0	0.0	0.0	0.0	0.0	0.0	0.0	0.0
	T	2.51E-05	7.56E-03	4.78E-05	2.31E-04	1.94E-04	5.09E-04	4.61E-05	1.95E-05	9.27E-06	9.27E-06	1.68E-04
GI TRACT S WALL	G	2.77E-04	5.08E-05	4.83E-03	3.34E-04	3.30E-04	1.47E-04	3.03E-04	1.88E-04	1.87E-04	1.87E-04	1.35E-04
	B	0.0	0.0	7.49E-04	0.0	0.0	0.0	0.0	0.0	0.0	0.0	0.0
	T	2.77E-04	5.08E-05	5.58E-03	3.34E-04	3.30E-04	1.47E-04	3.03E-04	1.88E-04	1.87E-04	1.87E-04	1.35E-04
SI+CONT	G	9.46E-05	2.58E-04	2.37E-04	2.90E-03	1.47E-03	8.32E-04	2.67E-04	1.53E-04	3.17E-05	3.17E-05	1.47E-04
	B	0.0	0.0	0.0	4.68E-04	0.0	0.0	0.0	0.0	0.0	0.0	0.0
	T	9.46E-05	2.58E-04	2.37E-04	3.37E-03	1.47E-03	8.32E-04	2.67E-04	1.53E-04	3.17E-05	3.17E-05	1.47E-04
ULI WALL	G	1.06E-04	1.85E-04	3.00E-04	2.16E-03	4.08E-03	3.81E-04	2.74E-04	2.22E-04	4.13E-05	4.13E-05	1.56E-04
	B	0.0	0.0	0.0	0.0	8.51E-04	0.0	0.0	0.0	0.0	0.0	0.0
	T	1.06E-04	1.85E-04	3.00E-04	2.16E-03	4.93E-03	3.81E-04	2.74E-04	2.22E-04	4.13E-05	4.13E-05	1.56E-04
LLI WALL	G	2.74E-05	6.28E-04	1.34E-04	6.42E-04	3.06E-04	4.81E-03	8.81E-05	2.89E-05	8.76E-06	8.76E-06	1.61E-04
	B	0.0	0.0	0.0	0.0	0.0	1.39E-03	0.0	0.0	0.0	0.0	0.0
	T	2.74E-05	6.28E-04	1.34E-04	6.42E-04	3.06E-04	6.20E-03	8.81E-05	2.89E-05	8.76E-06	8.76E-06	1.61E-04
KIDNEYS	G	1.03E-03	3.82E-05	3.09E-04	2.95E-04	2.73E-04	9.05E-05	7.15E-03	3.49E-04	9.83E-05	9.83E-05	1.38E-04
	B	0.0	0.0	0.0	0.0	0.0	0.0	1.21E-03	0.0	0.0	0.0	0.0
	T	1.03E-03	3.82E-05	3.09E-04	2.95E-04	2.73E-04	9.05E-05	8.35E-03	3.49E-04	9.83E-05	9.83E-05	1.38E-04
LIVER	G	4.44E-04	2.98E-05	1.87E-04	1.78E-04	2.38E-04	3.97E-05	3.60E-04	2.44E-03	2.26E-04	2.26E-04	1.08E-04
	B	0.0	0.0	0.0	0.0	0.0	0.0	0.0	2.08E-04	0.0	0.0	0.0
	T	4.44E-04	2.98E-05	1.87E-04	1.78E-04	2.38E-04	3.97E-05	3.60E-04	2.65E-03	2.26E-04	2.26E-04	1.08E-04
LUNGS	G	2.27E-04	8.46E-06	1.69E-04	3.40E-05	4.12E-05	1.61E-05	9.56E-05	2.33E-04	1.46E-03	1.46E-03	1.27E-04
	B	0.0	0.0	0.0	0.0	0.0	0.0	0.0	0.0	3.75E-04	3.75E-04	0.0
	T	2.27E-04	8.46E-06	1.69E-04	3.40E-05	4.12E-05	1.61E-05	9.56E-05	2.33E-04	1.84E-03	1.84E-03	1.27E-04
RESP LYM NODE	G	2.27E-04	8.46E-06	1.69E-04	3.40E-05	4.12E-05	1.61E-05	9.56E-05	2.33E-04	1.44E-03	1.46E-03	1.27E-04
	B	0.0	0.0	0.0	0.0	0.0	0.0	0.0	0.0	1.13E-04	2.50E-02	0.0
	T	2.27E-04	8.46E-06	1.69E-04	3.40E-05	4.12E-05	1.61E-05	9.56E-05	2.33E-04	1.55E-03	2.64E-02	1.27E-04
MUSCLE*	G	1.47E-04	1.68E-04	1.35E-04	1.47E-04	1.41E-04	1.61E-04	1.38E-04	1.08E-04	1.27E-04	1.27E-04	1.49E-04
	B	0.0	0.0	0.0	0.0	0.0	0.0	0.0	0.0	0.0	0.0	1.34E-05
	T	1.47E-04	1.68E-04	1.35E-04	1.47E-04	1.41E-04	1.61E-04	1.38E-04	1.08E-04	1.27E-04	1.27E-04	1.62E-04
OVARIES	G	4.35E-05	4.71E-04	1.34E-04	9.31E-04	6.74E-04	1.60E-03	1.49E-04	7.87E-05	1.71E-05	1.71E-05	1.88E-04
	B	0.0	0.0	0.0	0.0	0.0	0.0	0.0	0.0	0.0	0.0	0.0
	T	4.35E-05	4.71E-04	1.34E-04	9.31E-04	6.74E-04	1.60E-03	1.49E-04	7.87E-05	1.71E-05	1.71E-05	1.88E-04

30-ZINC-65 CONTINUED

TARGET ORGANS		SOURCE ORGANS										
		ADRENALS	BLAD CON	S CONT	SI+CONT	ULI CONT	LLI CONT	KIDNEYS	LIVER	LUNG	RESP LYM NODE	MUSCLE*
PANCREAS	G	8.23E-04	2.83E-05	1.55E-03	1.85E-04	1.99E-04	6.93E-05	6.45E-04	3.95E-04	2.16E-04	2.16E-04	1.68E-04
	B	0.0	0.0	0.0	0.0	0.0	0.0	0.0	0.0	0.0	0.0	0.0
	T	8.23E-04	2.83E-05	1.55E-03	1.85E-04	1.99E-04	6.93E-05	6.45E-04	3.95E-04	2.16E-04	2.16E-04	1.68E-04
SKELETON BONE	G	1.27E-04	5.25E-05	5.55E-05	7.40E-05	6.53E-05	9.50E-05	9.14E-05	6.80E-05	9.23E-05	9.23E-05	1.08E-04
	B	0.0	0.0	0.0	0.0	0.0	0.0	0.0	0.0	0.0	0.0	0.0
	T	1.27E-04	5.25E-05	5.55E-05	7.40E-05	6.53E-05	9.50E-05	9.14E-05	6.80E-05	9.23E-05	9.23E-05	1.08E-04
R MARROW	G	2.25E-04	1.09E-04	9.27E-05	2.27E-04	1.88E-04	2.81E-04	2.29E-04	9.59E-05	1.17E-04	1.17E-04	1.24E-04
	B	0.0	0.0	0.0	0.0	0.0	0.0	0.0	0.0	0.0	0.0	0.0
	T	2.25E-04	1.09E-04	9.27E-05	2.27E-04	1.88E-04	2.81E-04	2.29E-04	9.59E-05	1.17E-04	1.17E-04	1.24E-04
Y MARROW	G	1.24E-04	4.86E-05	7.72E-05	1.01E-04	9.25E-05	1.17E-04	1.13E-04	1.02E-04	9.67E-05	9.67E-05	1.02E-04
	B	0.0	0.0	0.0	0.0	0.0	0.0	0.0	0.0	0.0	0.0	0.0
	T	1.24E-04	4.86E-05	7.72E-05	1.01E-04	9.25E-05	1.17E-04	1.13E-04	1.02E-04	9.67E-05	9.67E-05	1.02E-04
T E CL	G	1.27E-04	5.25E-05	5.55E-05	7.40E-05	6.53E-05	9.50E-05	9.14E-05	6.80E-05	9.23E-05	9.23E-05	1.08E-04
	B	0.0	0.0	0.0	0.0	0.0	0.0	0.0	0.0	0.0	0.0	0.0
	T	1.27E-04	5.25E-05	5.55E-05	7.40E-05	6.53E-05	9.50E-05	9.14E-05	6.80E-05	9.23E-05	9.23E-05	1.08E-04
SKIN	G	7.23E-05	6.87E-05	6.07E-05	5.75E-05	5.54E-05	6.20E-05	6.56E-05	6.13E-05	6.79E-05	6.79E-05	9.27E-05
	B	0.0	0.0	0.0	0.0	0.0	0.0	0.0	0.0	0.0	0.0	0.0
	T	7.23E-05	6.87E-05	6.07E-05	5.75E-05	5.54E-05	6.20E-05	6.56E-05	6.13E-05	6.79E-05	6.79E-05	9.27E-05
SPLEEN	G	5.64E-04	2.39E-05	8.87E-04	1.52E-04	1.36E-04	1.02E-04	7.83E-04	1.07E-04	2.01E-04	2.01E-04	1.41E-04
	B	0.0	0.0	0.0	0.0	0.0	0.0	0.0	0.0	0.0	0.0	0.0
	T	5.64E-04	2.39E-05	8.87E-04	1.52E-04	1.36E-04	1.02E-04	7.83E-04	1.07E-04	2.01E-04	2.01E-04	1.41E-04
TESTES	G	9.08E-06	4.47E-04	1.67E-05	5.36E-05	5.26E-05	1.46E-04	1.72E-05	2.29E-05	3.72E-06	3.72E-06	1.20E-04
	B	0.0	0.0	0.0	0.0	0.0	0.0	0.0	0.0	0.0	0.0	0.0
	T	9.08E-06	4.47E-04	1.67E-05	5.36E-05	5.26E-05	1.46E-04	1.72E-05	2.29E-05	3.72E-06	3.72E-06	1.20E-04
THYMUS	G	6.09E-05	4.69E-06	7.94E-05	1.60E-05	1.73E-05	7.57E-06	1.46E-05	7.46E-05	4.04E-04	4.04E-04	1.51E-04
	B	0.0	0.0	0.0	0.0	0.0	0.0	0.0	0.0	0.0	0.0	0.0
	T	6.09E-05	4.69E-06	7.94E-05	1.60E-05	1.73E-05	7.57E-06	1.46E-05	7.46E-05	4.04E-04	4.04E-04	1.51E-04
THYROID	G	2.24E-05	1.78E-06	1.73E-05	5.61E-06	5.93E-06	2.88E-06	1.16E-05	2.02E-05	1.25E-04	1.25E-04	1.31E-04
	B	0.0	0.0	0.0	0.0	0.0	0.0	0.0	0.0	0.0	0.0	0.0
	T	2.24E-05	1.78E-06	1.73E-05	5.61E-06	5.93E-06	2.88E-06	1.16E-05	2.02E-05	1.25E-04	1.25E-04	1.31E-04
UTERUS	G	4.88E-05	1.34E-03	9.57E-05	7.87E-04	4.54E-04	5.32E-04	8.82E-05	4.34E-05	1.54E-05	1.54E-05	2.41E-04
	B	0.0	0.0	0.0	0.0	0.0	0.0	0.0	0.0	0.0	0.0	0.0
	T	4.88E-05	1.34E-03	9.57E-05	7.87E-04	4.54E-04	5.32E-04	8.82E-05	4.34E-05	1.54E-05	1.54E-05	2.41E-04
T BODY	G	1.62E-04	1.77E-04	1.70E-04	1.86E-04	1.83E-04	1.81E-04	1.63E-04	1.63E-04	1.39E-04	1.39E-04	1.41E-04
	B	5.35E-06	6.02E-07	1.61E-06	4.28E-06	2.55E-06	3.17E-06	5.35E-06	5.35E-06	5.35E-06	5.35E-06	5.35E-06
	T	1.67E-04	1.78E-04	1.72E-04	1.90E-04	1.85E-04	1.84E-04	1.69E-04	1.68E-04	1.44E-04	1.44E-04	1.47E-04

CONTINUED NEXT PAGE

30-ZINC-65 CONTINUED

TARGET ORGANS		SOURCE ORGANS										
		OVARIES	PANCREAS	COR BONE	CAN BONE	R MARROW	Y MARROW	SKIN	SPLEEN	TESTES	THYROID	T BODY
ADRENALS	G	5.43E-05	6.55E-04	1.85E-04	1.85E-04	2.72E-04	6.75E-05	8.26E-05	6.69E-04	9.08E-06	2.18E-05	2.02E-04
	B	0.0	0.0	0.0	0.0	0.0	0.0	0.0	0.0	0.0	0.0	5.35E-06
	T	5.43E-05	6.55E-04	1.85E-04	1.85E-04	2.72E-04	6.75E-05	8.26E-05	6.69E-04	9.08E-06	2.18E-05	2.07E-04
BLAD WALL	G	6.61E-04	1.63E-05	4.93E-05	4.93E-05	1.11E-04	3.37E-05	7.85E-05	3.41E-05	4.91E-04	1.78E-06	1.95E-04
	B	0.0	0.0	0.0	0.0	0.0	0.0	0.0	0.0	0.0	0.0	5.35E-06
	T	6.61E-04	1.63E-05	4.93E-05	4.93E-05	1.11E-04	3.37E-05	7.85E-05	3.41E-05	4.91E-04	1.78E-06	2.00E-04
GI TRACT S WALL	G	7.90E-05	1.58E-03	5.35E-05	5.35E-05	1.15E-04	7.30E-05	6.50E-05	8.86E-04	9.05E-06	1.49E-05	1.56E-04
	B	0.0	0.0	0.0	0.0	0.0	0.0	0.0	0.0	0.0	0.0	5.35E-06
	T	7.90E-05	1.58E-03	5.35E-05	5.35E-05	1.15E-04	7.30E-05	6.50E-05	8.86E-04	9.05E-06	1.49E-05	1.61E-04
SI+CONT	G	1.05E-03	1.73E-04	7.99E-05	7.99E-05	2.43E-04	9.81E-05	5.90E-05	1.36E-04	5.29E-05	4.35E-06	1.87E-04
	B	0.0	0.0	0.0	0.0	0.0	0.0	0.0	0.0	0.0	0.0	5.35E-06
	T	1.05E-03	1.73E-04	7.99E-05	7.99E-05	2.43E-04	9.81E-05	5.90E-05	1.36E-04	5.29E-05	4.35E-06	1.92E-04
ULI WALL	G	9.90E-04	2.10E-04	7.54E-05	7.54E-05	1.79E-04	8.65E-05	6.33E-05	1.36E-04	3.96E-05	4.92E-06	1.77E-04
	B	0.0	0.0	0.0	0.0	0.0	0.0	0.0	0.0	0.0	0.0	5.35E-06
	T	9.90E-04	2.10E-04	7.54E-05	7.54E-05	1.79E-04	8.65E-05	6.33E-05	1.36E-04	3.96E-05	4.92E-06	1.82E-04
LLI WALL	G	1.25E-03	5.82E-05	1.02E-04	1.02E-04	2.79E-04	8.19E-05	6.43E-05	6.17E-05	2.22E-04	2.50E-06	1.88E-04
	B	0.0	0.0	0.0	0.0	0.0	0.0	0.0	0.0	0.0	0.0	5.35E-06
	T	1.25E-03	5.82E-05	1.02E-04	1.02E-04	2.79E-04	8.19E-05	6.43E-05	6.17E-05	2.22E-04	2.50E-06	1.94E-04
KIDNEYS	G	1.06E-04	5.69E-04	1.13E-04	1.13E-04	2.31E-04	1.13E-04	7.56E-05	7.68E-04	1.53E-05	1.33E-05	1.71E-04
	B	0.0	0.0	0.0	0.0	0.0	0.0	0.0	0.0	0.0	0.0	5.35E-06
	T	1.06E-04	5.69E-04	1.13E-04	1.13E-04	2.31E-04	1.13E-04	7.56E-05	7.68E-04	1.53E-05	1.33E-05	1.76E-04
LIVER	G	6.42E-05	3.78E-04	7.07E-05	7.07E-05	9.78E-05	1.07E-04	6.64E-05	1.04E-04	1.09E-05	1.98E-05	1.72E-04
	B	0.0	0.0	0.0	0.0	0.0	0.0	0.0	0.0	0.0	0.0	5.35E-06
	T	6.42E-05	3.78E-04	7.07E-05	7.07E-05	9.78E-05	1.07E-04	6.64E-05	1.04E-04	1.09E-05	1.98E-05	1.77E-04
LUNGS	G	1.60E-05	2.17E-04	9.58E-05	9.58E-05	1.19E-04	1.00E-04	7.00E-05	2.00E-04	3.34E-06	1.10E-04	1.35E-04
	B	0.0	0.0	0.0	0.0	0.0	0.0	0.0	0.0	0.0	0.0	5.35E-06
	T	1.60E-05	2.17E-04	9.58E-05	9.58E-05	1.19E-04	1.00E-04	7.00E-05	2.00E-04	3.34E-06	1.10E-04	1.40E-04
RESP LYM NODE	G	1.60E-05	2.17E-04	9.58E-05	9.58E-05	1.19E-04	1.00E-04	7.00E-05	2.00E-04	3.34E-06	1.10E-04	1.35E-04
	B	0.0	0.0	0.0	0.0	0.0	0.0	0.0	0.0	0.0	0.0	5.35E-06
	T	1.60E-05	2.17E-04	9.58E-05	9.58E-05	1.19E-04	1.00E-04	7.00E-05	2.00E-04	3.34E-06	1.10E-04	1.40E-04
MUSCLE*	G	1.88E-04	1.68E-04	1.08E-04	1.08E-04	1.26E-04	9.95E-05	9.27E-05	1.41E-04	1.20E-04	1.31E-04	1.41E-04
	B	0.0	0.0	0.0	0.0	0.0	0.0	0.0	0.0	0.0	0.0	5.35E-06
	T	1.88E-04	1.68E-04	1.08E-04	1.08E-04	1.26E-04	9.95E-05	9.27E-05	1.41E-04	1.20E-04	1.31E-04	1.47E-04
OVARIES	G	8.60E-02	9.46E-05	9.16E-05	9.16E-05	2.72E-04	9.08E-05	5.94E-05	5.52E-05	4.49E-45	2.97E-06	1.44E-04
	B	3.40E-02	0.0	0.0	0.0	0.0	0.0	0.0	0.0	0.0	0.0	5.35E-06
	T	1.20E-01	9.46E-05	9.16E-05	9.16E-05	2.72E-04	9.08E-05	5.94E-05	5.52E-05	4.49E-45	2.97E-06	1.49E-04

30-ZINC-65 CONTINUED

TARGET ORGANS		SOURCE ORGANS										
		OVARIES	PANCREAS	COR BONE	CAN BONE	R MARROW	Y MARROW	SKIN	SPLEEN	TESTES	THYROID	T BODY
PANCREAS	G	8.38E-05	2.20E-02	1.00E-04	1.00E-04	1.12E-04	9.87E-05	4.95E-05	1.68E-03	1.11E-05	1.43E-05	1.57E-04
	B	0.0	3.75E-03	0.0	0.0	0.0	0.0	0.0	0.0	0.0	0.0	5.35E-06
	T	8.38E-05	2.57E-02	1.00E-04	1.00E-04	1.12E-04	9.87E-05	4.95E-05	1.68E-03	1.11E-05	1.43E-05	1.62E-04
SKELETON BONE	G	8.44E-05	8.46E-05	3.37E-04	3.37E-04	2.22E-04	2.50E-04	8.39E-05	7.30E-05	6.29E-05	7.07E-05	1.38E-04
	B	0.0	0.0	7.49E-05	6.82E-05	4.45E-06	0.0	0.0	0.0	0.0	0.0	5.35E-06
	T	8.44E-05	8.46E-05	4.12E-04	4.05E-04	2.26E-04	2.50E-04	8.39E-05	7.30E-05	6.29E-05	7.07E-05	1.43E-04
R MARROW	G	2.72E-04	1.57E-04	3.04E-04	3.04E-04	7.27E-04	2.57E-04	7.81E-05	1.06E-04	4.90E-05	7.63E-05	1.53E-04
	B	0.0	0.0	3.18E-07	2.23E-05	2.35E-04	0.0	0.0	0.0	0.0	0.0	5.35E-06
	T	2.72E-04	1.57E-04	3.05E-04	3.27E-04	9.62E-04	2.57E-04	7.81E-05	1.06E-04	4.90E-05	7.63E-05	1.58E-04
Y MARROW	G	1.11E-04	9.98E-05	2.91E-04	2.91E-04	2.76E-04	4.45E-04	8.90E-05	1.08E-04	2.78E-05	3.86E-05	1.30E-04
	B	0.0	0.0	0.0	0.0	0.0	2.50E-04	0.0	0.0	0.0	0.0	5.35E-06
	T	1.11E-04	9.98E-05	2.91E-04	2.91E-04	2.76E-04	6.95E-04	8.90E-05	1.08E-04	2.78E-05	3.86E-05	1.36E-04
T E CL	G	8.44E-05	8.46E-05	3.34E-04	3.34E-04	3.08E-04	2.86E-04	8.39E-05	7.30E-05	6.29E-05	7.07E-05	1.39E-04
	B	0.0	0.0	1.64E-05	3.22E-05	1.03E-04	6.24E-05	0.0	0.0	0.0	0.0	5.35E-06
	T	8.44E-05	8.46E-05	3.51E-04	3.66E-04	4.12E-04	3.48E-04	8.39E-05	7.30E-05	6.29E-05	7.07E-05	1.45E-04
SKIN	G	5.53E-05	5.53E-05	8.51E-05	8.51E-05	7.44E-05	9.30E-05	2.37E-04	6.34E-05	1.53E-04	9.03E-05	9.49E-05
	B	0.0	0.0	0.0	0.0	0.0	0.0	1.44E-04	0.0	0.0	0.0	5.35E-06
	T	5.53E-05	5.53E-05	8.51E-05	8.51E-05	7.44E-05	9.30E-05	3.81E-04	6.34E-05	1.53E-04	9.03E-05	1.00E-04
SPLEEN	G	5.82E-05	1.69E-03	8.15E-05	8.15E-05	1.01E-04	1.12E-04	7.36E-05	1.28E-02	6.65E-06	2.06E-05	1.66E-04
	B	0.0	0.0	0.0	0.0	0.0	0.0	0.0	2.08E-03	0.0	0.0	5.35E-06
	T	5.82E-05	1.69E-03	8.15E-05	8.15E-05	1.01E-04	1.12E-04	7.36E-05	1.49E-02	6.65E-06	2.06E-05	1.71E-04
TESTES	G	4.49E-45	1.27E-05	6.70E-05	6.70E-05	3.70E-05	8.79E-05	9.16E-05	1.16E-05	3.72E-02	7.90E-07	1.67E-04
	B	0.0	0.0	0.0	0.0	0.0	0.0	0.0	0.0	1.07E-02	0.0	5.35E-06
	T	4.49E-45	1.27E-05	6.70E-05	6.70E-05	3.70E-05	8.79E-05	9.16E-05	1.16E-05	4.80E-02	7.90E-07	1.72E-04
THYMUS	G	8.01E-06	5.47E-05	7.46E-05	7.46E-05	7.31E-05	4.97E-05	6.91E-05	5.77E-05	2.00E-06	3.73E-04	1.38E-04
	B	0.0	0.0	0.0	0.0	0.0	0.0	0.0	0.0	0.0	0.0	5.35E-06
	T	8.01E-06	5.47E-05	7.46E-05	7.46E-05	7.31E-05	4.97E-05	6.91E-05	5.77E-05	2.00E-06	3.73E-04	1.43E-04
THYROID	G	2.96E-06	7.27E-06	6.41E-05	6.41E-05	8.74E-05	5.51E-05	7.10E-05	1.69E-05	7.90E-07	5.19E-02	1.50E-04
	B	0.0	0.0	0.0	0.0	0.0	0.0	0.0	0.0	0.0	1.87E-02	5.35E-06
	T	2.96E-06	7.27E-06	6.41E-05	6.41E-05	8.74E-05	5.51E-05	7.10E-05	1.69E-05	7.90E-07	7.06E-02	1.55E-04
UTERUS	G	1.55E-03	5.87E-05	8.48E-05	8.48E-05	1.56E-04	6.06E-05	7.28E-05	5.22E-05	4.49E-45	2.84E-06	2.18E-04
	B	0.0	0.0	0.0	0.0	0.0	0.0	0.0	0.0	0.0	0.0	5.35E-06
	T	1.55E-03	5.87E-05	8.48E-05	8.48E-05	1.56E-04	6.06E-05	7.28E-05	5.22E-05	4.49E-45	2.84E-06	2.24E-04
T BODY	G	1.89E-04	1.85E-04	1.40E-04	1.40E-04	1.54E-04	1.25E-04	9.40E-05	1.62E-04	1.40E-04	1.27E-04	1.40E-04
	B	5.35E-06	5.35E-06	5.35E-06	5.35E-06	5.35E-06	5.35E-06	5.35E-06	5.35E-06	5.35E-06	5.35E-06	5.35E-06
	T	1.94E-04	1.90E-04	1.45E-04	1.45E-04	1.59E-04	1.30E-04	9.94E-05	1.68E-04	1.45E-04	1.32E-04	1.46E-04

*"MUSCLE" VALUES MAY BE USED FOR "SEPARABLE FAT" WITH ADJUSTMENT (SEE TEXT)
PRINCIPLE REFERENCE-NUCLEAR DATA, VOL. 2, NO. 6, OCTOBER (1970)
DATE DECAY DATA REVIEWED-DECEMBER 1971

S, AVERAGE DOSE EQUIVALENT PER UNIT ACCUMULATED ACTIVITY (REM/UCI-DAY), FOR 30-ZINC-69M (TR=1.380E 01 HOURS)

DATE OF TABLE 11-27-74

TARGET ORGANS		SOURCE ORGANS										
		ADRENALS	BLAD CON	S CONT	SI+CONT	ULI CONT	LLI CONT	KIDNEYS	LIVER	LUNG	RESP LYM NODE	MUSCLE*
ADRENALS	G	3.35E-02	1.66E-05	1.60E-04	9.72E-05	7.27E-05	3.61E-05	8.77E-04	3.63E-04	1.80E-04	1.80E-04	1.12E-04
	B	8.29E-02	0.0	0.0	0.0	0.0	0.0	0.0	0.0	0.0	0.0	0.0
	T	1.16E-01	1.66E-05	1.60E-04	9.72E-05	7.27E-05	3.61E-05	8.77E-04	3.63E-04	1.80E-04	1.80E-04	1.12E-04
BLAD WALL	G	8.11E-06	5.41E-03	3.02E-05	2.40E-04	1.44E-04	4.30E-04	2.72E-05	2.29E-05	5.11E-06	5.11E-06	1.31E-04
	B	0.0	2.90E-03	0.0	0.0	0.0	0.0	0.0	0.0	0.0	0.0	0.0
	T	8.11E-06	8.32E-03	3.02E-05	2.40E-04	1.44E-04	4.30E-04	2.72E-05	2.29E-05	5.11E-06	5.11E-06	1.31E-04
GI TRACT S WALL	G	2.17E-04	2.31E-05	3.81E-03	2.54E-04	2.68E-04	1.33E-04	2.48E-04	1.40E-04	1.36E-04	1.36E-04	1.04E-04
	B	0.0	0.0	2.32E-03	0.0	0.0	0.0	0.0	0.0	0.0	0.0	0.0
	T	2.17E-04	2.31E-05	6.13E-03	2.54E-04	2.68E-04	1.33E-04	2.48E-04	1.40E-04	1.36E-04	1.36E-04	1.04E-04
SI+CONT	G	6.93E-05	1.97E-04	1.94E-04	2.28E-03	1.21E-03	6.64E-04	2.04E-04	1.18E-04	1.93E-05	1.93E-05	1.14E-04
	B	0.0	0.0	0.0	1.45E-03	0.0	0.0	0.0	0.0	0.0	0.0	0.0
	T	6.93E-05	1.97E-04	1.94E-04	3.73E-03	1.21E-03	6.64E-04	2.04E-04	1.18E-04	1.93E-05	1.93E-05	1.14E-04
ULI WALL	G	7.53E-05	1.75E-04	2.47E-04	1.69E-03	3.13E-03	3.12E-04	2.12E-04	1.88E-04	2.61E-05	2.61E-05	1.20E-04
	B	0.0	0.0	0.0	0.0	2.64E-03	0.0	0.0	0.0	0.0	0.0	0.0
	T	7.53E-05	1.75E-04	2.47E-04	1.69E-03	5.77E-03	3.12E-04	2.12E-04	1.88E-04	2.61E-05	2.61E-05	1.20E-04
LLI WALL	G	2.44E-05	5.22E-04	9.40E-05	5.02E-04	2.20E-04	3.76E-03	6.46E-05	2.27E-05	6.31E-06	6.31E-06	1.25E-04
	B	0.0	0.0	0.0	0.0	0.0	4.30E-03	0.0	0.0	0.0	0.0	0.0
	T	2.44E-05	5.22E-04	9.40E-05	5.02E-04	2.20E-04	8.06E-03	6.46E-05	2.27E-05	6.31E-06	6.31E-06	1.25E-04
KIDNEYS	G	8.49E-04	2.70E-05	2.46E-04	2.32E-04	2.01E-04	6.31E-05	5.34E-03	2.79E-04	7.49E-05	7.49E-05	1.05E-04
	B	0.0	0.0	0.0	0.0	0.0	0.0	3.74E-03	0.0	0.0	0.0	0.0
	T	8.49E-04	2.70E-05	2.46E-04	2.32E-04	2.01E-04	6.31E-05	9.09E-03	2.79E-04	7.49E-05	7.49E-05	1.05E-04
LIVER	G	3.62E-04	1.99E-05	1.49E-04	1.34E-04	1.84E-04	2.46E-05	2.92E-04	1.89E-03	1.77E-04	1.77E-04	8.18E-05
	B	0.0	0.0	0.0	0.0	0.0	0.0	0.0	6.45E-04	0.0	0.0	0.0
	T	3.62E-04	1.99E-05	1.49E-04	1.34E-04	1.84E-04	2.46E-05	2.92E-04	2.53E-03	1.77E-04	1.77E-04	8.18E-05
LUNGS	G	1.74E-04	3.21E-06	1.34E-04	2.35E-05	2.41E-05	7.28E-06	6.85E-05	1.78E-04	1.07E-03	1.07E-03	9.83E-05
	B	0.0	0.0	0.0	0.0	0.0	0.0	0.0	0.0	1.16E-03	1.16E-03	0.0
	T	1.74E-04	3.21E-06	1.34E-04	2.35E-05	2.41E-05	7.28E-06	6.85E-05	1.78E-04	2.23E-03	2.23E-03	9.83E-05
RESP LYM NODE	G	1.74E-04	3.21E-06	1.34E-04	2.35E-05	2.41E-05	7.28E-06	6.85E-05	1.78E-04	1.07E-03	1.07E-03	9.83E-05
	B	0.0	0.0	0.0	0.0	0.0	0.0	0.0	0.0	1.15E-03	7.74E-02	0.0
	T	1.74E-04	3.21E-06	1.34E-04	2.35E-05	2.41E-05	7.28E-06	6.85E-05	1.78E-04	2.22E-03	7.85E-02	9.83E-05
MUSCLE*	G	1.12E-04	1.31E-04	1.04E-04	1.14E-04	1.09E-04	1.25E-04	1.05E-04	8.18E-05	9.83E-05	9.83E-05	1.10E-04
	B	0.0	0.0	0.0	0.0	0.0	0.0	0.0	0.0	0.0	0.0	4.15E-05
	T	1.12E-04	1.31E-04	1.04E-04	1.14E-04	1.09E-04	1.25E-04	1.05E-04	8.18E-05	9.83E-05	9.83E-05	1.52E-04
OVARIES	G	4.10E-05	4.86E-04	3.54E-05	6.70E-04	9.22E-04	1.23E-03	8.63E-05	1.89E-05	1.09E-05	1.09E-05	1.46E-04
	B	0.0	0.0	0.0	0.0	0.0	0.0	0.0	0.0	0.0	0.0	0.0
	T	4.10E-05	4.86E-04	3.54E-05	6.70E-04	9.22E-04	1.23E-03	8.63E-05	1.89E-05	1.09E-05	1.09E-05	1.46E-04

30-ZINC-69M CONTINUED

SOURCE ORGANS

TARGET ORGANS		ADRENALS	BLAD CON	S CONT	SI+CONT	ULI CONT	LLI CONT	KIDNEYS	LIVER	LUNG	RESP LYM NODE	MUSCLE*
PANCREAS	G	6.20E-04	1.99E-05	1.30E-03	1.53E-04	1.41E-04	5.45E-05	4.80E-04	3.40E-04	2.02E-04	2.02E-04	1.32E-04
	B	0.0	0.0	0.0	0.0	0.0	0.0	0.0	0.0	0.0	0.0	0.0
	T	6.20E-04	1.99E-05	1.30E-03	1.53E-04	1.41E-04	5.45E-05	4.80E-04	3.40E-04	2.02E-04	2.02E-04	1.32E-04
SKELETON BONE	G	1.04E-04	4.61E-05	4.65E-05	6.10E-05	5.60E-05	8.03E-05	7.51E-05	5.67E-05	7.62E-05	7.62E-05	8.09E-05
	B	0.0	0.0	0.0	0.0	0.0	0.0	0.0	0.0	0.0	0.0	0.0
	T	1.04E-04	4.61E-05	4.65E-05	6.10E-05	5.60E-05	8.03E-05	7.51E-05	5.67E-05	7.62E-05	7.62E-05	8.09E-05
R MARROW	G	1.88E-04	9.98E-05	8.13E-05	1.95E-04	1.69E-04	2.41E-04	1.91E-04	8.32E-05	9.62E-05	9.62E-05	1.05E-04
	B	0.0	0.0	0.0	0.0	0.0	0.0	0.0	0.0	0.0	0.0	0.0
	T	1.88E-04	9.98E-05	8.13E-05	1.95E-04	1.69E-04	2.41E-04	1.91E-04	8.32E-05	9.62E-05	9.62E-05	1.05E-04
Y MARROW	G	1.01E-04	4.22E-05	6.47E-05	8.47E-05	7.96E-05	9.92E-05	9.32E-05	8.30E-05	7.99E-05	7.99E-05	8.43E-05
	B	0.0	0.0	0.0	0.0	0.0	0.0	0.0	0.0	0.0	0.0	0.0
	T	1.01E-04	4.22E-05	6.47E-05	8.47E-05	7.96E-05	9.92E-05	9.32E-05	8.30E-05	7.99E-05	7.99E-05	8.43E-05
T E CL	G	1.04E-04	4.61E-05	4.65E-05	6.10E-05	5.60E-05	8.03E-05	7.51E-05	5.67E-05	7.62E-05	7.62E-05	8.09E-05
	B	0.0	0.0	0.0	0.0	0.0	0.0	0.0	0.0	0.0	0.0	0.0
	T	1.04E-04	4.61E-05	4.65E-05	6.10E-05	5.60E-05	8.03E-05	7.51E-05	5.67E-05	7.62E-05	7.62E-05	8.09E-05
SKIN	G	4.88E-05	4.67E-05	4.19E-05	3.81E-05	3.95E-05	4.26E-05	4.78E-05	4.34E-05	4.89E-05	4.89E-05	6.52E-05
	B	0.0	0.0	0.0	0.0	0.0	0.0	0.0	0.0	0.0	0.0	0.0
	T	4.88E-05	4.67E-05	4.19E-05	3.81E-05	3.95E-05	4.26E-05	4.78E-05	4.34E-05	4.89E-05	4.89E-05	6.52E-05
SPLEEN	G	4.79E-04	1.55E-05	7.08E-04	1.16E-04	9.31E-05	6.69E-05	6.18E-04	7.28E-05	1.59E-04	1.59E-04	1.08E-04
	B	0.0	0.0	0.0	0.0	0.0	0.0	0.0	0.0	0.0	0.0	0.0
	T	4.79E-04	1.55E-05	7.08E-04	1.16E-04	9.31E-05	6.69E-05	6.18E-04	7.28E-05	1.59E-04	1.59E-04	1.08E-04
TESTES	G	4.87E-06	3.67E-04	2.41E-06	2.66E-05	3.51E-05	1.52E-04	1.06E-05	7.97E-06	1.63E-06	1.63E-06	9.04E-05
	B	0.0	0.0	0.0	0.0	0.0	0.0	0.0	0.0	0.0	0.0	0.0
	T	4.87E-06	3.67E-04	2.41E-06	2.66E-05	3.51E-05	1.52E-04	1.06E-05	7.97E-06	1.63E-06	1.63E-06	9.04E-05
THYMUS	G	6.17E-05	2.13E-06	1.71E-05	9.85E-06	1.08E-05	4.01E-06	2.69E-05	8.85E-05	2.75E-04	2.75E-04	1.42E-04
	B	0.0	0.0	0.0	0.0	0.0	0.0	0.0	0.0	0.0	0.0	0.0
	T	6.17E-05	2.13E-06	1.71E-05	9.85E-06	1.08E-05	4.01E-06	2.69E-05	8.85E-05	2.75E-04	2.75E-04	1.42E-04
THYROID	G	1.41E-05	6.12E-07	1.08E-05	2.70E-06	2.90E-06	1.20E-06	6.60E-06	1.43E-05	8.33E-05	8.33E-05	1.01E-04
	B	0.0	0.0	0.0	0.0	0.0	0.0	0.0	0.0	0.0	0.0	0.0
	T	1.41E-05	6.12E-07	1.08E-05	2.70E-06	2.90E-06	1.20E-06	6.60E-06	1.43E-05	8.33E-05	8.33E-05	1.01E-04
UTERUS	G	5.93E-05	1.10E-03	6.51E-05	6.50E-04	3.33E-04	4.34E-04	6.56E-05	3.18E-05	7.10E-06	7.10E-06	1.46E-04
	B	0.0	0.0	0.0	0.0	0.0	0.0	0.0	0.0	0.0	0.0	0.0
	T	5.93E-05	1.10E-03	6.51E-05	6.50E-04	3.33E-04	4.34E-04	6.56E-05	3.18E-05	7.10E-06	7.10E-06	1.46E-04
T BODY	G	1.24E-04	1.38E-04	1.31E-04	1.45E-04	1.41E-04	1.40E-04	1.25E-04	1.25E-04	1.07E-04	1.07E-04	1.05E-04
	B	1.66E-05	1.87E-06	4.97E-06	1.33E-05	7.91E-06	9.83E-06	1.66E-05	1.66E-05	1.66E-05	1.66E-05	1.66E-05
	T	1.40E-04	1.40E-04	1.36E-04	1.58E-04	1.49E-04	1.50E-04	1.41E-04	1.42E-04	1.23E-04	1.23E-04	1.22E-04

CONTINUED NEXT PAGE

30-ZINC-69M CONTINUED

TARGET ORGANS		SOURCE ORGANS										
		OVARIES	PANCREAS	COR BONE	CAN BONE	R MARROW	Y MARROW	SKIN	SPLEEN	TESTES	THYROID	T BODY
ADRENALS	G	4.15E-05	6.24E-04	1.19E-04	1.19E-04	1.42E-04	8.57E-05	5.14E-05	4.51E-04	4.87E-06	1.41E-05	1.63E-04
	B	0.0	0.0	0.0	0.0	0.0	0.0	0.0	0.0	0.0	0.0	1.66E-05
	T	4.15E-05	6.24E-04	1.19E-04	1.19E-04	1.42E-04	8.57E-05	5.14E-05	4.51E-04	4.87E-06	1.41E-05	1.80E-04
BLAD WALL	G	4.94E-04	1.40E-05	4.60E-05	4.60E-05	5.11E-05	2.08E-05	4.48E-05	1.04E-05	3.70E-04	6.17E-07	1.33E-04
	B	0.0	0.0	0.0	0.0	0.0	0.0	0.0	0.0	0.0	0.0	1.66E-05
	T	4.94E-04	1.40E-05	4.60E-05	4.60E-05	5.11E-05	2.08E-05	4.48E-05	1.04E-05	3.70E-04	6.17E-07	1.49E-04
GI TRACT S WALL	G	6.14E-05	1.27E-03	4.33E-05	4.33E-05	7.51E-05	5.48E-05	4.65E-05	7.20E-04	7.64E-06	8.15E-06	1.34E-04
	B	0.0	0.0	0.0	0.0	0.0	0.0	0.0	0.0	0.0	0.0	1.66E-05
	T	6.14E-05	1.27E-03	4.33E-05	4.33E-05	7.51E-05	5.48E-05	4.65E-05	7.20E-04	7.64E-06	8.15E-06	1.50E-04
SI+CONT	G	8.72E-04	1.32E-04	5.88E-05	5.88E-05	1.97E-04	7.81E-05	3.98E-05	1.03E-04	3.79E-05	6.70E-07	1.46E-04
	B	0.0	0.0	0.0	0.0	0.0	0.0	0.0	0.0	0.0	0.0	1.66E-05
	T	8.72E-04	1.32E-04	5.88E-05	5.88E-05	1.97E-04	7.81E-05	3.98E-05	1.03E-04	3.79E-05	6.70E-07	1.63E-04
ULI WALL	G	8.20E-04	1.60E-04	5.24E-05	5.24E-05	1.53E-04	6.49E-05	4.11E-05	1.00E-04	2.45E-05	7.90E-07	1.42E-04
	B	0.0	0.0	0.0	0.0	0.0	0.0	0.0	0.0	0.0	0.0	1.66E-05
	T	8.20E-04	1.60E-04	5.24E-05	5.24E-05	1.53E-04	6.49E-05	4.11E-05	1.00E-04	2.45E-05	7.90E-07	1.58E-04
LLI WALL	G	1.05E-03	4.01E-05	7.15E-05	7.15E-05	2.25E-04	6.23E-05	4.29E-05	5.08E-05	2.10E-04	9.97E-07	1.42E-04
	B	0.0	0.0	0.0	0.0	0.0	0.0	0.0	0.0	0.0	0.0	1.66E-05
	T	1.05E-03	4.01E-05	7.15E-05	7.15E-05	2.25E-04	6.23E-05	4.29E-05	5.08E-05	2.10E-04	9.97E-07	1.58E-04
KIDNEYS	G	8.15E-05	4.60E-04	6.72E-05	6.72E-05	1.73E-04	8.82E-05	5.39E-05	6.32E-04	6.84E-06	3.47E-06	1.29E-04
	B	0.0	0.0	0.0	0.0	0.0	0.0	0.0	0.0	0.0	0.0	1.66E-05
	T	8.15E-05	4.60E-04	6.72E-05	6.72E-05	1.73E-04	8.82E-05	5.39E-05	6.32E-04	6.84E-06	3.47E-06	1.46E-04
LIVER	G	4.49E-05	3.07E-04	5.17E-05	5.17E-05	7.49E-05	7.92E-05	4.84E-05	7.85E-05	3.64E-06	1.12E-05	1.27E-04
	B	0.0	0.0	0.0	0.0	0.0	0.0	0.0	0.0	0.0	0.0	1.66E-05
	T	4.49E-05	3.07E-04	5.17E-05	5.17E-05	7.49E-05	7.92E-05	4.84E-05	7.85E-05	3.64E-06	1.12E-05	1.43E-04
LUNGS	G	7.69E-06	1.78E-04	7.25E-05	7.25E-05	8.89E-05	7.34E-05	4.96E-05	1.63E-04	1.03E-06	7.68E-05	1.13E-04
	B	0.0	0.0	0.0	0.0	0.0	0.0	0.0	0.0	0.0	0.0	1.66E-05
	T	7.69E-06	1.78E-04	7.25E-05	7.25E-05	8.89E-05	7.34E-05	4.96E-05	1.63E-04	1.03E-06	7.68E-05	1.29E-04
RESP LYM NODE	G	7.69E-06	1.78E-04	7.25E-05	7.25E-05	8.89E-05	7.34E-05	4.96E-05	1.63E-04	1.03E-06	7.68E-05	1.13E-04
	B	0.0	0.0	0.0	0.0	0.0	0.0	0.0	0.0	0.0	0.0	1.66E-05
	T	7.69E-06	1.78E-04	7.25E-05	7.25E-05	8.89E-05	7.34E-05	4.96E-05	1.63E-04	1.03E-06	7.68E-05	1.29E-04
MUSCLE*	G	1.46E-04	1.32E-04	8.09E-05	8.09E-05	9.58E-05	7.48E-05	6.52E-05	1.08E-04	9.04E-05	1.01E-04	1.05E-04
	B	0.0	0.0	0.0	0.0	0.0	0.0	0.0	0.0	0.0	0.0	1.66E-05
	T	1.46E-04	1.32E-04	8.09E-05	8.09E-05	9.58E-05	7.48E-05	6.52E-05	1.08E-04	9.04E-05	1.01E-04	1.22E-04
OVARIES	G	5.60E-02	2.67E-05	7.42E-05	7.42E-05	2.46E-04	7.11E-05	2.50E-05	7.16E-05	2.91E-46	1.18E-06	1.27E-04
	B	1.06E-01	0.0	0.0	0.0	0.0	0.0	0.0	0.0	0.0	0.0	1.66E-05
	T	1.62E-01	2.67E-05	7.42E-05	7.42E-05	2.46E-04	7.11E-05	2.50E-05	7.16E-05	2.91E-46	1.18E-06	1.44E-04

30-ZINC-69M CONTINUED

TARGET ORGANS		SOURCE ORGANS										
		OVARIES	PANCREAS	COR BONE	CAN BONE	R MARROW	Y MARROW	SKIN	SPLEEN	TESTES	THYROID	T BODY
PANCREAS	G	3.99E-05	1.55E-02	6.97E-05	6.97E-05	1.26E-04	9.78E-05	4.33E-05	1.42E-03	3.37E-06	5.69E-06	1.34E-04
	B	0.0	1.16E-02	0.0	0.0	0.0	0.0	0.0	0.0	0.0	0.0	1.66E-05
	T	3.99E-05	2.71E-02	6.97E-05	6.97E-05	1.26E-04	9.78E-05	4.33E-05	1.42E-03	3.37E-06	5.69E-06	1.51E-04
SKELETON BONE	G	7.20E-05	7.10E-05	2.59E-04	2.59E-04	1.73E-04	1.91E-04	6.26E-05	5.89E-05	5.05E-05	5.71E-05	1.12E-04
	B	0.0	0.0	2.32E-04	1.42E-04	6.01E-05	0.0	0.0	0.0	0.0	0.0	1.66E-05
	T	7.20E-05	7.10E-05	4.91E-04	4.01E-04	2.33E-04	1.91E-04	6.26E-05	5.89E-05	5.05E-05	5.71E-05	1.29E-04
R MARROW	G	2.42E-04	1.35E-04	2.31E-04	2.31E-04	5.56E-04	1.98E-04	5.86E-05	8.80E-05	4.05E-05	6.31E-05	1.25E-04
	B	0.0	0.0	8.99E-06	3.01E-04	5.73E-04	0.0	0.0	0.0	0.0	0.0	1.66E-05
	T	2.42E-04	1.35E-04	2.40E-04	5.31E-04	1.13E-03	1.98E-04	5.86E-05	8.80E-05	4.05E-05	6.31E-05	1.41E-04
Y MARROW	G	9.62E-05	8.33E-05	2.23E-04	2.23E-04	2.13E-04	3.25E-04	6.60E-05	8.83E-05	2.13E-05	3.02E-05	1.05E-04
	B	0.0	0.0	0.0	0.0	0.0	7.74E-04	0.0	0.0	0.0	0.0	1.66E-05
	T	9.62E-05	8.33E-05	2.23E-04	2.23E-04	2.13E-04	1.10E-03	6.60E-05	8.83E-05	2.13E-05	3.02E-05	1.21E-04
T E CL	G	7.20E-05	7.10E-05	2.59E-04	2.59E-04	2.34E-04	2.11E-04	6.26E-05	5.89E-05	5.05E-05	5.71E-05	1.13E-04
	B	0.0	0.0	1.48E-04	2.47E-04	2.22E-04	1.93E-04	0.0	0.0	0.0	0.0	1.66E-05
	T	7.20E-05	7.10E-05	4.06E-04	5.06E-04	4.57E-04	4.05E-04	6.26E-05	5.89E-05	5.05E-05	5.71E-05	1.29E-04
SKIN	G	3.78E-05	3.64E-05	6.23E-05	6.23E-05	5.43E-05	6.95E-05	1.46E-04	4.49E-05	1.15E-04	6.28E-05	6.47E-05
	B	0.0	0.0	0.0	0.0	0.0	0.0	4.46E-04	0.0	0.0	0.0	1.66E-05
	T	3.78E-05	3.64E-05	6.23E-05	6.23E-05	5.43E-05	6.95E-05	5.92E-04	4.49E-05	1.15E-04	6.28E-05	8.13E-05
SPLEEN	G	4.93E-05	1.41E-03	5.93E-05	5.93E-05	6.11E-05	7.34E-05	4.75E-05	9.54E-03	8.04E-06	9.34E-06	1.32E-04
	B	0.0	0.0	0.0	0.0	0.0	0.0	0.0	6.45E-03	0.0	0.0	1.66E-05
	T	4.93E-05	1.41E-03	5.93E-05	5.93E-05	6.11E-05	7.34E-05	4.75E-05	1.60E-02	8.04E-06	9.34E-06	1.48E-04
TESTES	G	2.91E-46	4.85E-06	4.32E-05	4.32E-05	3.00E-05	7.36E-05	6.50E-05	6.65E-06	2.61E-02	2.13E-07	1.27E-04
	B	0.0	0.0	0.0	0.0	0.0	0.0	0.0	0.0	3.32E-02	0.0	1.66E-05
	T	2.91E-46	4.85E-06	4.32E-05	4.32E-05	3.00E-05	7.36E-05	6.50E-05	6.65E-06	5.93E-02	2.13E-07	1.43E-04
THYMUS	G	4.18E-06	4.44E-05	5.19E-05	5.19E-05	3.77E-05	3.29E-05	6.15E-05	3.38E-05	7.18E-07	3.24E-04	1.26E-04
	B	0.0	0.0	0.0	0.0	0.0	0.0	0.0	0.0	0.0	0.0	1.66E-05
	T	4.18E-06	4.44E-05	5.19E-05	5.19E-05	3.77E-05	3.29E-05	6.15E-05	3.38E-05	7.18E-07	3.24E-04	1.42E-04
THYROID	G	1.18E-06	1.34E-05	7.98E-05	7.98E-05	6.42E-05	4.47E-05	6.08E-05	1.05E-05	2.13E-07	3.52E-02	1.03E-04
	B	0.0	0.0	0.0	0.0	0.0	0.0	0.0	0.0	0.0	5.80E-02	1.66E-05
	T	1.18E-06	1.34E-05	7.98E-05	7.98E-05	6.42E-05	4.47E-05	6.08E-05	1.05E-05	2.13E-07	9.32E-02	1.19E-04
UTERUS	G	1.37E-03	4.68E-05	4.32E-05	4.32E-05	1.48E-04	4.87E-05	3.92E-05	3.34E-05	2.91E-46	1.12E-06	1.34E-04
	B	0.0	0.0	0.0	0.0	0.0	0.0	0.0	0.0	0.0	0.0	1.66E-05
	T	1.37E-03	4.68E-05	4.32E-05	4.32E-05	1.48E-04	4.87E-05	3.92E-05	3.34E-05	2.91E-46	1.12E-06	1.50E-04
T BODY	G	1.48E-04	1.45E-04	1.05E-04	1.05E-04	1.17E-04	9.39E-05	6.58E-05	1.25E-04	1.04E-04	9.56E-05	1.06E-04
	B	1.66E-05	1.66E-05	1.66E-05	1.66E-05	1.66E-05	1.66E-05	1.66E-05	1.66E-05	1.66E-05	1.66E-05	1.66E-05
	T	1.64E-04	1.61E-04	1.22E-04	1.22E-04	1.34E-04	1.10E-04	8.23E-05	1.41E-04	1.21E-04	1.12E-04	1.22E-04

*"MUSCLE" VALUES MAY BE USED FOR "SEPARABLE FAT" WITH ADJUSTMENT (SEE TEXT)
PRINCIPLE REFERENCE-LEDERER, C. M. ET AL., TABLE OF ISOTOPES, 6TH ED.
DATE DECAY DATA REVIEWED-OCTOBER 1968

S, AVERAGE DOSE EQUIVALENT PER UNIT ACCUMULATED ACTIVITY (REM/UCI-DAY), FOR 30-ZINC-69 (TR=5.700E 01 MIN)

DATE OF TABLE 11-27-74

TARGET ORGANS		SOURCE ORGANS										
		ADRENALS	BLAD CON	S CONT	SI+CONT	ULI CONT	LLI CONT	KIDNEYS	LIVER	LUNG	RESP LYM NODE	MUSCLE*
ADRENALS	B	1.17E 00	0.0	0.0	0.0	0.0	0.0	0.0	0.0	0.0	0.0	0.0
	T	1.17E 00	0.0	0.0	0.0	0.0	0.0	0.0	0.0	0.0	0.0	0.0
BLAD WALL	B	0.0	4.09E-02	0.0	0.0	0.0	0.0	0.0	0.0	0.0	0.0	0.0
	T	0.0	4.09E-02	0.0	0.0	0.0	0.0	0.0	0.0	0.0	0.0	0.0
GI TRACT S WALL	B	0.0	0.0	3.27E-02	0.0	0.0	0.0	0.0	0.0	0.0	0.0	0.0
	T	0.0	0.0	3.27E-02	0.0	0.0	0.0	0.0	0.0	0.0	0.0	0.0
SI+CONT	B	0.0	0.0	0.0	2.04E-02	0.0	0.0	0.0	0.0	0.0	0.0	0.0
	T	0.0	0.0	0.0	2.04E-02	0.0	0.0	0.0	0.0	0.0	0.0	0.0
ULI WALL	B	0.0	0.0	0.0	0.0	3.72E-02	0.0	0.0	0.0	0.0	0.0	0.0
	T	0.0	0.0	0.0	0.0	3.72E-02	0.0	0.0	0.0	0.0	0.0	0.0
LLI WALL	B	0.0	0.0	0.0	0.0	0.0	6.05E-02	0.0	0.0	0.0	0.0	0.0
	T	0.0	0.0	0.0	0.0	0.0	6.05E-02	0.0	0.0	0.0	0.0	0.0
KIDNEYS	B	0.0	0.0	0.0	0.0	0.0	0.0	5.27E-02	0.0	0.0	0.0	0.0
	T	0.0	0.0	0.0	0.0	0.0	0.0	5.27E-02	0.0	0.0	0.0	0.0
LIVER	B	0.0	0.0	0.0	0.0	0.0	0.0	0.0	9.08E-03	0.0	0.0	0.0
	T	0.0	0.0	0.0	0.0	0.0	0.0	0.0	9.08E-03	0.0	0.0	0.0
LUNGS	B	0.0	0.0	0.0	0.0	0.0	0.0	0.0	0.0	1.63E-02	1.63E-02	0.0
	T	0.0	0.0	0.0	0.0	0.0	0.0	0.0	0.0	1.63E-02	1.63E-02	0.0
RESP LYM NODE	B	0.0	0.0	0.0	0.0	0.0	0.0	0.0	0.0	1.63E-02	1.09E 00	0.0
	T	0.0	0.0	0.0	0.0	0.0	0.0	0.0	0.0	1.63E-02	1.09E 00	0.0
MUSCLE*	B	0.0	0.0	0.0	0.0	0.0	0.0	0.0	0.0	0.0	0.0	5.84E-04
	T	0.0	0.0	0.0	0.0	0.0	0.0	0.0	0.0	0.0	0.0	5.84E-04
OVARIES	B	0.0	0.0	0.0	0.0	0.0	0.0	0.0	0.0	0.0	0.0	0.0
	T	0.0	0.0	0.0	0.0	0.0	0.0	0.0	0.0	0.0	0.0	0.0

30-ZINC-69 CONTINUED

TARGET ORGANS		SOURCE ORGANS										
		ADRENALS	BLAD CON	S CONT	SI+CONT	ULI CONT	LLI CONT	KIDNEYS	LIVER	LUNG	RESP LYM NODE	MUSCLE*
PANCREAS	B	0.0	0.0	0.0	0.0	0.0	0.0	0.0	0.0	0.0	0.0	0.0
	T	0.0	0.0	0.0	0.0	0.0	0.0	0.0	0.0	0.0	0.0	0.0
SKELETON BONE	B	0.0	0.0	0.0	0.0	0.0	0.0	0.0	0.0	0.0	0.0	0.0
	T	0.0	0.0	0.0	0.0	0.0	0.0	0.0	0.0	0.0	0.0	0.0
R MARROW	B	0.0	0.0	0.0	0.0	0.0	0.0	0.0	0.0	0.0	0.0	0.0
	T	0.0	0.0	0.0	0.0	0.0	0.0	0.0	0.0	0.0	0.0	0.0
Y MARROW	B	0.0	0.0	0.0	0.0	0.0	0.0	0.0	0.0	0.0	0.0	0.0
	T	0.0	0.0	0.0	0.0	0.0	0.0	0.0	0.0	0.0	0.0	0.0
T E CL	B	0.0	0.0	0.0	0.0	0.0	0.0	0.0	0.0	0.0	0.0	0.0
	T	0.0	0.0	0.0	0.0	0.0	0.0	0.0	0.0	0.0	0.0	0.0
SKIN	B	0.0	0.0	0.0	0.0	0.0	0.0	0.0	0.0	0.0	0.0	0.0
	T	0.0	0.0	0.0	0.0	0.0	0.0	0.0	0.0	0.0	0.0	0.0
SPLEEN	B	0.0	0.0	0.0	0.0	0.0	0.0	0.0	0.0	0.0	0.0	0.0
	T	0.0	0.0	0.0	0.0	0.0	0.0	0.0	0.0	0.0	0.0	0.0
TESTES	B	0.0	0.0	0.0	0.0	0.0	0.0	0.0	0.0	0.0	0.0	0.0
	T	0.0	0.0	0.0	0.0	0.0	0.0	0.0	0.0	0.0	0.0	0.0
THYMUS	B	0.0	0.0	0.0	0.0	0.0	0.0	0.0	0.0	0.0	0.0	0.0
	T	0.0	0.0	0.0	0.0	0.0	0.0	0.0	0.0	0.0	0.0	0.0
THYROID	B	0.0	0.0	0.0	0.0	0.0	0.0	0.0	0.0	0.0	0.0	0.0
	T	0.0	0.0	0.0	0.0	0.0	0.0	0.0	0.0	0.0	0.0	0.0
UTERUS	B	0.0	0.0	0.0	0.0	0.0	0.0	0.0	0.0	0.0	0.0	0.0
	T	0.0	0.0	0.0	0.0	0.0	0.0	0.0	0.0	0.0	0.0	0.0
T BODY	B	2.34E-04	2.63E-05	7.01E-05	1.87E-04	1.11E-04	1.38E-04	2.34E-04	2.34E-04	2.34E-04	2.34E-04	2.34E-04
	T	2.34E-04	2.63E-05	7.01E-05	1.87E-04	1.11E-04	1.38E-04	2.34E-04	2.34E-04	2.34E-04	2.34E-04	2.34E-04

CONTINUED NEXT PAGE

30-ZINC-69 CONTINUED

TARGET ORGANS		SOURCE ORGANS										
		OVARIES	PANCREAS	COR BONE	CAN BONE	R MARROW	Y MARROW	SKIN	SPLEEN	TESTES	THYROID	T BODY
ADRENALS	B	0.0	0.0	0.0	0.0	0.0	0.0	0.0	0.0	0.0	0.0	2.34E-04
	T	0.0	0.0	0.0	0.0	0.0	0.0	0.0	0.0	0.0	0.0	2.34E-04
BLAD WALL	B	0.0	0.0	0.0	0.0	0.0	0.0	0.0	0.0	0.0	0.0	2.34E-04
	T	0.0	0.0	0.0	0.0	0.0	0.0	0.0	0.0	0.0	0.0	2.34E-04
GI TRACT S WALL	B	0.0	0.0	0.0	0.0	0.0	0.0	0.0	0.0	0.0	0.0	2.34E-04
	T	0.0	0.0	0.0	0.0	0.0	0.0	0.0	0.0	0.0	0.0	2.34E-04
SI+CONT	B	0.0	0.0	0.0	0.0	0.0	0.0	0.0	0.0	0.0	0.0	2.34E-04
	T	0.0	0.0	0.0	0.0	0.0	0.0	0.0	0.0	0.0	0.0	2.34E-04
ULI WALL	B	0.0	0.0	0.0	0.0	0.0	0.0	0.0	0.0	0.0	0.0	2.34E-04
	T	0.0	0.0	0.0	0.0	0.0	0.0	0.0	0.0	0.0	0.0	2.34E-04
LLI WALL	B	0.0	0.0	0.0	0.0	0.0	0.0	0.0	0.0	0.0	0.0	2.34E-04
	T	0.0	0.0	0.0	0.0	0.0	0.0	0.0	0.0	0.0	0.0	2.34E-04
KIDNEYS	B	0.0	0.0	0.0	0.0	0.0	0.0	0.0	0.0	0.0	0.0	2.34E-04
	T	0.0	0.0	0.0	0.0	0.0	0.0	0.0	0.0	0.0	0.0	2.34E-04
LIVER	B	0.0	0.0	0.0	0.0	0.0	0.0	0.0	0.0	0.0	0.0	2.34E-04
	T	0.0	0.0	0.0	0.0	0.0	0.0	0.0	0.0	0.0	0.0	2.34E-04
LUNGS	B	0.0	0.0	0.0	0.0	0.0	0.0	0.0	0.0	0.0	0.0	2.34E-04
	T	0.0	0.0	0.0	0.0	0.0	0.0	0.0	0.0	0.0	0.0	2.34E-04
RESP LYM NODE	B	0.0	0.0	0.0	0.0	0.0	0.0	0.0	0.0	0.0	0.0	2.34E-04
	T	0.0	0.0	0.0	0.0	0.0	0.0	0.0	0.0	0.0	0.0	2.34E-04
MUSCLE*	B	0.0	0.0	0.0	0.0	0.0	0.0	0.0	0.0	0.0	0.0	2.34E-04
	T	0.0	0.0	0.0	0.0	0.0	0.0	0.0	0.0	0.0	0.0	2.34E-04
OVARIES	B	1.49E 00	0.0	0.0	0.0	0.0	0.0	0.0	0.0	0.0	0.0	2.34E-04
	T	1.49E 00	0.0	0.0	0.0	0.0	0.0	0.0	0.0	0.0	0.0	2.34E-04

30-ZINC-69 CONTINUED

TARGET ORGANS		SOURCE ORGANS										
		OVARIES	PANCREAS	COR BONE	CAN BONE	R MARROW	Y MARROW	SKIN	SPLEEN	TESTES	THYROID	T BODY
PANCREAS	B	0.0	1.63E-01	0.0	0.0	0.0	0.0	0.0	0.0	0.0	0.0	2.34E-04
	T	0.0	1.63E-01	0.0	0.0	0.0	0.0	0.0	0.0	0.0	0.0	2.34E-04
SKELETON BONE	B	0.0	0.0	3.27E-03	2.05E-03	8.14E-04	0.0	0.0	0.0	0.0	0.0	2.34E-04
	T	0.0	0.0	3.27E-03	2.05E-03	8.14E-04	0.0	0.0	0.0	0.0	0.0	2.34E-04
R MARROW	B	0.0	0.0	9.17E-05	4.07E-03	8.19E-03	0.0	0.0	0.0	0.0	0.0	2.34E-04
	T	0.0	0.0	9.17E-05	4.07E-03	8.19E-03	0.0	0.0	0.0	0.0	0.0	2.34E-04
Y MARROW	B	0.0	0.0	0.0	0.0	0.0	1.09E-02	0.0	0.0	0.0	0.0	2.34E-04
	T	0.0	0.0	0.0	0.0	0.0	1.09E-02	0.0	0.0	0.0	0.0	2.34E-04
T E CL	B	0.0	0.0	2.10E-03	3.65E-03	3.01E-03	2.72E-03	0.0	0.0	0.0	0.0	2.34E-04
	T	0.0	0.0	2.10E-03	3.65E-03	3.01E-03	2.72E-03	0.0	0.0	0.0	0.0	2.34E-04
SKIN	B	0.0	0.0	0.0	0.0	0.0	0.0	6.29E-03	0.0	0.0	0.0	2.34E-04
	T	0.0	0.0	0.0	0.0	0.0	0.0	6.29E-03	0.0	0.0	0.0	2.34E-04
SPLEEN	B	0.0	0.0	0.0	0.0	0.0	0.0	0.0	9.08E-02	0.0	0.0	2.34E-04
	T	0.0	0.0	0.0	0.0	0.0	0.0	0.0	9.08E-02	0.0	0.0	2.34E-04
TESTES	B	0.0	0.0	0.0	0.0	0.0	0.0	0.0	0.0	4.67E-01	0.0	2.34E-04
	T	0.0	0.0	0.0	0.0	0.0	0.0	0.0	0.0	4.67E-01	0.0	2.34E-04
THYMUS	B	0.0	0.0	0.0	0.0	0.0	0.0	0.0	0.0	0.0	0.0	2.34E-04
	T	0.0	0.0	0.0	0.0	0.0	0.0	0.0	0.0	0.0	0.0	2.34E-04
THYROID	B	0.0	0.0	0.0	0.0	0.0	0.0	0.0	0.0	0.0	8.17E-01	2.34E-04
	T	0.0	0.0	0.0	0.0	0.0	0.0	0.0	0.0	0.0	8.17E-01	2.34E-04
UTERUS	B	0.0	0.0	0.0	0.0	0.0	0.0	0.0	0.0	0.0	0.0	2.34E-04
	T	0.0	0.0	0.0	0.0	0.0	0.0	0.0	0.0	0.0	0.0	2.34E-04
T BODY	B	2.34E-04	2.34E-04	2.34E-04	2.34E-04	2.34E-04	2.34E-04	2.34E-04	2.34E-04	2.34E-04	2.34E-04	2.34E-04
	T	2.34E-04	2.34E-04	2.34E-04	2.34E-04	2.34E-04	2.34E-04	2.34E-04	2.34E-04	2.34E-04	2.34E-04	2.34E-04

*"MUSCLE" VALUES MAY BE USED FOR "SEPARABLE FAT" WITH ADJUSTMENT (SEE TEXT)
PRINCIPLE REFERENCE-LEDERER, C. M. ET AL., TABLE OF ISOTOPES, 6TH ED.
DATE DECAY DATA REVIEWED-OCTOBER 1968

S, AVERAGE DOSE EQUIVALENT PER UNIT ACCUMULATED ACTIVITY (REM/UCI-DAY), FOR 31-GALLIUM-67 (TR=7.810E 01 HOURS)

DATE OF TABLE 11-27-74

TARGET ORGANS		SOURCE ORGANS										
		ADRENALS	BLAD CON	S CONT	SI+CONT	ULI CONT	LLI CONT	KIDNEYS	LIVER	LUNG	RESP LYM NODE	MUSCLE*
ADRENALS	G	2.41E-02	5.18E-06	7.30E-05	3.65E-05	2.70E-05	1.20E-05	3.18E-04	1.39E-04	7.45E-05	7.45E-05	4.29E-05
	B	1.33E-01	0.0	0.0	0.0	0.0	0.0	0.0	0.0	0.0	0.0	0.0
	T	1.57E-01	5.18E-06	7.30E-05	3.65E-05	2.70E-05	1.20E-05	3.18E-04	1.39E-04	7.45E-05	7.45E-05	4.29E-05
BLAD WALL	G	3.55E-06	2.22E-03	8.20E-06	7.94E-05	6.18E-05	1.92E-04	8.86E-06	5.41E-06	1.37E-06	1.37E-06	5.17E-05
	B	0.0	4.66E-03	0.0	0.0	0.0	0.0	0.0	0.0	0.0	0.0	0.0
	T	3.55E-06	6.88E-03	8.20E-06	7.94E-05	6.18E-05	1.92E-04	8.86E-06	5.41E-06	1.37E-06	1.37E-06	5.17E-05
GI TRACT S WALL	G	8.50E-05	8.19E-06	1.54E-03	1.06E-04	1.10E-04	5.19E-05	1.01E-04	5.55E-05	5.42E-05	5.42E-05	3.92E-05
	B	0.0	0.0	3.73E-03	0.0	0.0	0.0	0.0	0.0	0.0	0.0	0.0
	T	8.50E-05	8.19E-06	5.27E-03	1.06E-04	1.10E-04	5.19E-05	1.01E-04	5.55E-05	5.42E-05	5.42E-05	3.92E-05
SI+CONT	G	2.47E-05	8.41E-05	7.74E-05	1.03E-03	4.89E-04	2.73E-04	8.32E-05	4.77E-05	5.95E-06	5.95E-06	4.51E-05
	B	0.0	0.0	0.0	2.33E-03	0.0	0.0	0.0	0.0	0.0	0.0	0.0
	T	2.47E-05	8.41E-05	7.74E-05	3.36E-03	4.89E-04	2.73E-04	8.32E-05	4.77E-05	5.95E-06	5.95E-06	4.51E-05
ULI WALL	G	2.73E-05	6.61E-05	1.03E-04	7.64E-04	1.28E-03	1.25E-04	8.36E-05	7.31E-05	7.38E-06	7.38E-06	4.76E-05
	B	0.0	0.0	0.0	0.0	4.24E-03	0.0	0.0	0.0	0.0	0.0	0.0
	T	2.73E-05	6.61E-05	1.03E-04	7.64E-04	5.52E-03	1.25E-04	8.36E-05	7.31E-05	7.38E-06	7.38E-06	4.76E-05
LLI WALL	G	7.01E-06	2.13E-04	3.62E-05	2.14E-04	9.05E-05	1.54E-03	2.27E-05	7.09E-06	2.47E-06	2.47E-06	4.92E-05
	B	0.0	0.0	0.0	0.0	0.0	6.90E-03	0.0	0.0	0.0	0.0	0.0
	T	7.01E-06	2.13E-04	3.62E-05	2.14E-04	9.05E-05	8.44E-03	2.27E-05	7.09E-06	2.47E-06	2.47E-06	4.92E-05
KIDNEYS	G	3.33E-04	8.30E-06	1.01E-04	9.12E-05	8.14E-05	2.57E-05	2.72E-03	1.14E-04	2.58E-05	2.58E-05	4.04E-05
	B	0.0	0.0	0.0	0.0	0.0	0.0	6.01E-03	0.0	0.0	0.0	0.0
	T	3.33E-04	8.30E-06	1.01E-04	9.12E-05	8.14E-05	2.57E-05	8.73E-03	1.14E-04	2.58E-05	2.58E-05	4.04E-05
LIVER	G	1.44E-04	5.87E-06	5.82E-05	5.35E-05	7.49E-05	7.98E-06	1.14E-04	8.50E-04	7.17E-05	7.17E-05	3.15E-05
	B	0.0	0.0	0.0	0.0	0.0	0.0	0.0	1.04E-03	0.0	0.0	0.0
	T	1.44E-04	5.87E-06	5.82E-05	5.35E-05	7.49E-05	7.98E-06	1.14E-04	1.89E-03	7.17E-05	7.17E-05	3.15E-05
LUNGS	G	7.15E-05	8.30E-07	5.11E-05	7.22E-06	8.04E-06	2.46E-06	2.51E-05	7.31E-05	6.03E-04	6.03E-04	3.86E-05
	B	0.0	0.0	0.0	0.0	0.0	0.0	0.0	0.0	1.86E-03	1.86E-03	0.0
	T	7.15E-05	8.30E-07	5.11E-05	7.22E-06	8.04E-06	2.46E-06	2.51E-05	7.31E-05	2.47E-03	2.47E-03	3.86E-05
RESP LYM NODE	G	7.15E-05	8.30E-07	5.11E-05	7.22E-06	8.04E-06	2.46E-06	2.51E-05	7.31E-05	5.74E-04	6.03E-04	3.86E-05
	B	0.0	0.0	0.0	0.0	0.0	0.0	0.0	0.0	1.50E-03	1.24E-01	0.0
	T	7.15E-05	8.30E-07	5.11E-05	7.22E-06	8.04E-06	2.46E-06	2.51E-05	7.31E-05	2.08E-03	1.25E-01	3.86E-05
MUSCLE*	G	4.29E-05	5.17E-05	4.07E-05	4.51E-05	4.30E-05	4.92E-05	4.04E-05	3.15E-05	3.86E-05	3.86E-05	4.52E-05
	B	0.0	0.0	0.0	0.0	0.0	0.0	0.0	0.0	0.0	0.0	6.66E-05
	T	4.29E-05	5.17E-05	4.07E-05	4.51E-05	4.30E-05	4.92E-05	4.04E-05	3.15E-05	3.86E-05	3.86E-05	1.12E-04
OVARIES	G	1.68E-05	2.12E-04	1.41E-05	3.07E-04	3.46E-04	5.41E-04	3.39E-05	1.23E-05	3.30E-06	3.30E-06	5.83E-05
	B	0.0	0.0	0.0	0.0	0.0	0.0	0.0	0.0	0.0	0.0	0.0
	T	1.68E-05	2.12E-04	1.41E-05	3.07E-04	3.46E-04	5.41E-04	3.39E-05	1.23E-05	3.30E-06	3.30E-06	5.83E-05

31-GALLIUM-67 CONTINUED

TARGET ORGANS		SOURCE ORGANS										
		ADRENALS	BLAD CON	S CONT	SI+CONT	ULI CONT	LLI CONT	KIDNEYS	LIVER	LUNG	RESP LYM NODE	MUSCLE*
PANCREAS	G	2.57E-04	7.48E-06	5.30E-04	5.97E-05	6.59E-05	2.09E-05	1.91E-04	1.23E-04	7.60E-05	7.60E-05	5.25E-05
	B	0.0	0.0	0.0	0.0	0.0	0.0	0.0	0.0	0.0	0.0	0.0
	T	2.57E-04	7.48E-06	5.30E-04	5.97E-05	6.59E-05	2.09E-05	1.91E-04	1.23E-04	7.60E-05	7.60E-05	5.25E-05
SKELETON BONE	G	5.27E-05	2.37E-05	2.35E-05	3.24E-05	2.92E-05	4.23E-05	3.78E-05	2.91E-05	3.87E-05	3.87E-05	2.98E-05
	B	0.0	0.0	0.0	0.0	0.0	0.0	0.0	0.0	0.0	0.0	0.0
	T	5.27E-05	2.37E-05	2.35E-05	3.24E-05	2.92E-05	4.23E-05	3.78E-05	2.91E-05	3.87E-05	3.87E-05	2.98E-05
R MARROW	G	9.53E-05	5.54E-05	4.14E-05	1.08E-04	9.34E-05	1.31E-04	9.85E-05	4.18E-05	4.91E-05	4.91E-05	5.28E-05
	B	0.0	0.0	0.0	0.0	0.0	0.0	0.0	0.0	0.0	0.0	0.0
	T	9.53E-05	5.54E-05	4.14E-05	1.08E-04	9.34E-05	1.31E-04	9.85E-05	4.18E-05	4.91E-05	4.91E-05	5.28E-05
Y MARROW	G	5.04E-05	2.22E-05	3.28E-05	4.53E-05	4.19E-05	5.25E-05	4.64E-05	4.32E-05	4.02E-05	4.02E-05	4.04E-05
	B	0.0	0.0	0.0	0.0	0.0	0.0	0.0	0.0	0.0	0.0	0.0
	T	5.04E-05	2.22E-05	3.28E-05	4.53E-05	4.19E-05	5.25E-05	4.64E-05	4.32E-05	4.02E-05	4.02E-05	4.04E-05
T E CL	G	5.27E-05	2.37E-05	2.35E-05	3.24E-05	2.92E-05	4.23E-05	3.78E-05	2.91E-05	3.87E-05	3.87E-05	2.98E-05
	B	0.0	0.0	0.0	0.0	0.0	0.0	0.0	0.0	0.0	0.0	0.0
	T	5.27E-05	2.37E-05	2.35E-05	3.24E-05	2.92E-05	4.23E-05	3.78E-05	2.91E-05	3.87E-05	3.87E-05	2.98E-05
SKIN	G	1.65E-05	1.66E-05	1.39E-05	1.30E-05	1.32E-05	1.51E-05	1.66E-05	1.51E-05	1.68E-05	1.68E-05	2.31E-05
	B	0.0	0.0	0.0	0.0	0.0	0.0	0.0	0.0	0.0	0.0	0.0
	T	1.65E-05	1.66E-05	1.39E-05	1.30E-05	1.32E-05	1.51E-05	1.66E-05	1.51E-05	1.68E-05	1.68E-05	2.31E-05
SPLEEN	G	1.90E-04	1.13E-05	2.93E-04	4.46E-05	4.06E-05	2.38E-05	2.54E-04	2.71E-05	6.64E-05	6.64E-05	4.24E-05
	B	0.0	0.0	0.0	0.0	0.0	0.0	0.0	0.0	0.0	0.0	0.0
	T	1.90E-04	1.13E-05	2.93E-04	4.46E-05	4.06E-05	2.38E-05	2.54E-04	2.71E-05	6.64E-05	6.64E-05	4.24E-05
TESTES	G	1.25E-06	1.38E-04	1.49E-06	9.57E-06	9.49E-06	5.57E-05	3.11E-06	2.29E-06	3.62E-07	3.62E-07	3.38E-05
	B	0.0	0.0	0.0	0.0	0.0	0.0	0.0	0.0	0.0	0.0	0.0
	T	1.25E-06	1.38E-04	1.49E-06	9.57E-06	9.49E-06	5.57E-05	3.11E-06	2.29E-06	3.62E-07	3.62E-07	3.38E-05
THYMUS	G	1.42E-05	4.81E-07	7.62E-06	2.86E-06	3.32E-06	1.04E-06	6.65E-06	2.18E-05	1.20E-04	1.20E-04	6.99E-05
	B	0.0	0.0	0.0	0.0	0.0	0.0	0.0	0.0	0.0	0.0	0.0
	T	1.42E-05	4.81E-07	7.62E-06	2.86E-06	3.32E-06	1.04E-06	6.65E-06	2.18E-05	1.20E-04	1.20E-04	6.99E-05
THYROID	G	4.30E-06	1.15E-07	3.14E-06	6.34E-07	6.92E-07	2.55E-07	1.79E-06	5.16E-06	2.71E-05	2.71E-05	3.88E-05
	B	0.0	0.0	0.0	0.0	0.0	0.0	0.0	0.0	0.0	0.0	0.0
	T	4.30E-06	1.15E-07	3.14E-06	6.34E-07	6.92E-07	2.55E-07	1.79E-06	5.16E-06	2.71E-05	2.71E-05	3.88E-05
UTERUS	G	3.95E-05	4.60E-04	2.32E-05	2.76E-04	1.47E-04	2.00E-04	2.77E-05	1.14E-05	2.58E-06	2.58E-06	6.93E-05
	B	0.0	0.0	0.0	0.0	0.0	0.0	0.0	0.0	0.0	0.0	0.0
	T	3.95E-05	4.60E-04	2.32E-05	2.76E-04	1.47E-04	2.00E-04	2.77E-05	1.14E-05	2.58E-06	2.58E-06	6.93E-05
T BODY	G	5.20E-05	5.77E-05	5.48E-05	6.13E-05	5.96E-05	5.96E-05	5.21E-05	5.26E-05	4.59E-05	4.59E-05	4.24E-05
	B	2.66E-05	3.00E-06	7.99E-06	2.13E-05	1.27E-05	1.58E-05	2.66E-05	2.66E-05	2.66E-05	2.66E-05	2.66E-05
	T	7.86E-05	6.07E-05	6.28E-05	8.26E-05	7.23E-05	7.53E-05	7.87E-05	7.92E-05	7.26E-05	7.26E-05	6.90E-05

CONTINUED NEXT PAGE

31-GALLIUM-67 CONTINUED

TARGET ORGANS		SOURCE ORGANS										
		OVARIES	PANCREAS	COR BONE	CAN BONE	R MARROW	Y MARROW	SKIN	SPLEEN	TESTES	THYROID	T BODY
ADRENALS	G	1.13E-05	2.56E-04	3.69E-05	3.69E-05	6.78E-05	3.58E-05	2.11E-05	1.85E-04	1.25E-06	4.30E-06	5.70E-05
	B	0.0	0.0	0.0	0.0	0.0	0.0	0.0	0.0	0.0	0.0	2.66E-05
	T	1.13E-05	2.56E-04	3.69E-05	3.69E-05	6.78E-05	3.58E-05	2.11E-05	1.85E-04	1.25E-06	4.30E-06	8.37E-05
BLAD WALL	G	2.06E-04	4.44E-06	1.51E-05	1.51E-05	2.49E-05	1.05E-05	1.54E-05	4.03E-06	1.42E-04	1.16E-07	5.36E-05
	B	0.0	0.0	0.0	0.0	0.0	0.0	0.0	0.0	0.0	0.0	2.66E-05
	T	2.06E-04	4.44E-06	1.51E-05	1.51E-05	2.49E-05	1.05E-05	1.54E-05	4.03E-06	1.42E-04	1.16E-07	8.02E-05
GI TRACT S WALL	G	2.33E-05	5.27E-04	1.64E-05	1.64E-05	2.94E-05	2.23E-05	1.65E-05	2.89E-04	1.51E-06	1.72E-06	5.44E-05
	B	0.0	0.0	0.0	0.0	0.0	0.0	0.0	0.0	0.0	0.0	2.66E-05
	T	2.33E-05	5.27E-04	1.64E-05	1.64E-05	2.94E-05	2.23E-05	1.65E-05	2.89E-04	1.51E-06	1.72E-06	8.10E-05
SI+CONT	G	3.52E-04	5.29E-05	2.21E-05	2.21E-05	7.59E-05	3.08E-05	1.40E-05	4.10E-05	1.18E-05	3.26E-07	6.06E-05
	B	0.0	0.0	0.0	0.0	0.0	0.0	0.0	0.0	0.0	0.0	2.66E-05
	T	3.52E-04	5.29E-05	2.21E-05	2.21E-05	7.59E-05	3.08E-05	1.40E-05	4.10E-05	1.18E-05	3.26E-07	8.73E-05
ULI WALL	G	3.26E-04	6.32E-05	2.07E-05	2.07E-05	6.10E-05	2.68E-05	1.42E-05	3.95E-05	9.53E-06	3.20E-07	5.73E-05
	B	0.0	0.0	0.0	0.0	0.0	0.0	0.0	0.0	0.0	0.0	2.66E-05
	T	3.26E-04	6.32E-05	2.07E-05	2.07E-05	6.10E-05	2.68E-05	1.42E-05	3.95E-05	9.53E-06	3.20E-07	8.39E-05
LLI WALL	G	4.23E-04	1.63E-05	3.01E-05	3.01E-05	8.58E-05	2.61E-05	1.47E-05	1.83E-05	8.08E-05	2.09E-07	5.46E-05
	B	0.0	0.0	0.0	0.0	0.0	0.0	0.0	0.0	0.0	0.0	2.66E-05
	T	4.23E-04	1.63E-05	3.01E-05	3.01E-05	8.58E-05	2.61E-05	1.47E-05	1.83E-05	8.08E-05	2.09E-07	8.12E-05
KIDNEYS	G	2.81E-05	1.89E-04	2.55E-05	2.55E-05	6.53E-05	3.20E-05	1.84E-05	2.63E-04	1.64E-06	1.10E-06	5.21E-05
	B	0.0	0.0	0.0	0.0	0.0	0.0	0.0	0.0	0.0	0.0	2.66E-05
	T	2.81E-05	1.89E-04	2.55E-05	2.55E-05	6.53E-05	3.20E-05	1.84E-05	2.63E-04	1.64E-06	1.10E-06	7.87E-05
LIVER	G	1.63E-05	1.28E-04	1.94E-05	1.94E-05	2.78E-05	2.93E-05	1.66E-05	2.92E-05	1.10E-06	3.28E-06	5.14E-05
	B	0.0	0.0	0.0	0.0	0.0	0.0	0.0	0.0	0.0	0.0	2.66E-05
	T	1.63E-05	1.28E-04	1.94E-05	1.94E-05	2.78E-05	2.93E-05	1.66E-05	2.92E-05	1.10E-06	3.28E-06	7.80E-05
LUNGS	G	2.10E-06	7.34E-05	2.82E-05	2.82E-05	3.46E-05	2.85E-05	1.81E-05	6.58E-05	2.85E-07	2.81E-05	4.50E-05
	B	0.0	0.0	0.0	0.0	0.0	0.0	0.0	0.0	0.0	0.0	2.66E-05
	T	2.10E-06	7.34E-05	2.82E-05	2.82E-05	3.46E-05	2.85E-05	1.81E-05	6.58E-05	2.85E-07	2.81E-05	7.16E-05
RESP LYM NODE	G	2.10E-06	7.34E-05	2.82E-05	2.82E-05	3.46E-05	2.85E-05	1.81E-05	6.58E-05	2.85E-07	2.81E-05	4.50E-05
	B	0.0	0.0	0.0	0.0	0.0	0.0	0.0	0.0	0.0	0.0	2.66E-05
	T	2.10E-06	7.34E-05	2.82E-05	2.82E-05	3.46E-05	2.85E-05	1.81E-05	6.58E-05	2.85E-07	2.81E-05	7.16E-05
MUSCLE*	G	5.83E-05	5.25E-05	2.98E-05	2.98E-05	3.58E-05	2.69E-05	2.31E-05	4.24E-05	3.38E-05	3.88E-05	4.24E-05
	B	0.0	0.0	0.0	0.0	0.0	0.0	0.0	0.0	0.0	0.0	2.66E-05
	T	5.83E-05	5.25E-05	2.98E-05	2.98E-05	3.58E-05	2.69E-05	2.31E-05	4.24E-05	3.38E-05	3.88E-05	6.90E-05
OVARIES	G	4.27E-02	1.08E-05	2.24E-05	2.24E-05	8.63E-05	3.96E-05	1.19E-05	1.66E-05	7.52E-45	2.43E-07	5.59E-05
	B	1.69E-01	0.0	0.0	0.0	0.0	0.0	0.0	0.0	0.0	0.0	2.66E-05
	T	2.12E-01	1.08E-05	2.24E-05	2.24E-05	8.63E-05	3.96E-05	1.19E-05	1.66E-05	7.52E-45	2.43E-07	8.25E-05

31-GALLIUM-67 CONTINUED

TARGET ORGANS		SOURCE ORGANS										
		OVARIES	PANCREAS	COR BONE	CAN BONE	R MARROW	Y MARROW	SKIN	SPLEEN	TESTES	THYROID	T BODY
PANCREAS	G	1.46E-05	9.02E-03	2.75E-05	2.75E-05	4.84E-05	3.55E-05	1.48E-05	5.56E-04	1.69E-06	2.40E-06	6.05E-05
	B	0.0	1.86E-02	0.0	0.0	0.0	0.0	0.0	0.0	0.0	0.0	2.66E-05
	T	1.46E-05	2.77E-02	2.75E-05	2.75E-05	4.84E-05	3.55E-05	1.48E-05	5.56E-04	1.69E-06	2.40E-06	8.71E-05
SKELETON BONE	G	3.93E-05	3.73E-05	1.41E-04	1.41E-04	9.16E-05	1.03E-04	2.79E-05	3.00E-05	2.41E-05	2.70E-05	5.39E-05
	B	0.0	0.0	3.73E-04	3.16E-04	3.75E-05	0.0	0.0	0.0	0.0	0.0	2.66E-05
	T	3.93E-05	3.73E-05	5.14E-04	4.57E-04	1.29E-04	1.03E-04	2.79E-05	3.00E-05	2.41E-05	2.70E-05	8.05E-05
R MARROW	G	1.38E-04	7.14E-05	1.26E-04	1.26E-04	3.27E-04	1.07E-04	2.64E-05	4.48E-05	1.93E-05	2.95E-05	6.50E-05
	B	0.0	0.0	1.63E-06	1.88E-04	1.12E-03	0.0	0.0	0.0	0.0	0.0	2.66E-05
	T	1.38E-04	7.14E-05	1.28E-04	3.14E-04	1.44E-03	1.07E-04	2.64E-05	4.48E-05	1.93E-05	2.95E-05	9.17E-05
Y MARROW	G	5.31E-05	4.33E-05	1.21E-04	1.21E-04	1.17E-04	1.98E-04	2.93E-05	4.49E-05	9.18E-06	1.40E-05	5.30E-05
	B	0.0	0.0	0.0	0.0	0.0	1.24E-03	0.0	0.0	0.0	0.0	2.66E-05
	T	5.31E-05	4.33E-05	1.21E-04	1.21E-04	1.17E-04	1.44E-03	2.93E-05	4.49E-05	9.18E-06	1.40E-05	7.97E-05
T E CL	G	3.93E-05	3.73E-05	1.38E-04	1.38E-04	1.36E-04	1.24E-04	2.79E-05	3.00E-05	2.41E-05	2.70E-05	5.66E-05
	B	0.0	0.0	1.73E-04	3.59E-04	3.82E-04	3.11E-04	0.0	0.0	0.0	0.0	2.66E-05
	T	3.93E-05	3.73E-05	3.11E-04	4.97E-04	5.18E-04	4.35E-04	2.79E-05	3.00E-05	2.41E-05	2.70E-05	8.33E-05
SKIN	G	1.29E-05	1.26E-05	2.09E-05	2.09E-05	1.88E-05	2.34E-05	1.00E-04	1.49E-05	4.18E-05	2.28E-05	2.54E-05
	B	0.0	0.0	0.0	0.0	0.0	0.0	7.17E-04	0.0	0.0	0.0	2.66E-05
	T	1.29E-05	1.26E-05	2.09E-05	2.09E-05	1.88E-05	2.34E-05	8.17E-04	1.49E-05	4.18E-05	2.28E-05	5.20E-05
SPLEEN	G	1.57E-05	5.65E-04	1.91E-05	1.91E-05	2.62E-05	3.03E-05	1.68E-05	4.78E-03	1.11E-06	3.28E-06	5.38E-05
	B	0.0	0.0	0.0	0.0	0.0	0.0	0.0	1.04E-02	0.0	0.0	2.66E-05
	T	1.57E-05	5.65E-04	1.91E-05	1.91E-05	2.62E-05	3.03E-05	1.68E-05	1.51E-02	1.11E-06	3.28E-06	8.04E-05
TESTES	G	7.52E-45	1.82E-06	1.80E-05	1.80E-05	1.14E-05	3.10E-05	2.78E-05	1.81E-06	1.50E-02	3.48E-08	3.97E-05
	B	0.0	0.0	0.0	0.0	0.0	0.0	0.0	0.0	5.32E-02	0.0	2.66E-05
	T	7.52E-45	1.82E-06	1.80E-05	1.80E-05	1.14E-05	3.10E-05	2.78E-05	1.81E-06	6.83E-02	3.48E-08	6.63E-05
THYMUS	G	1.05E-06	1.94E-05	1.59E-05	1.59E-05	2.19E-05	1.94E-05	1.99E-05	1.00E-05	1.37E-07	1.25E-04	5.98E-05
	B	0.0	0.0	0.0	0.0	0.0	0.0	0.0	0.0	0.0	0.0	2.66E-05
	T	1.05E-06	1.94E-05	1.59E-05	1.59E-05	2.19E-05	1.94E-05	1.99E-05	1.00E-05	1.37E-07	1.25E-04	8.64E-05
THYROID	G	2.43E-07	4.02E-06	2.58E-05	2.58E-05	2.12E-05	3.17E-05	2.19E-05	3.06E-06	3.48E-08	2.26E-02	3.81E-05
	B	0.0	0.0	0.0	0.0	0.0	0.0	0.0	0.0	0.0	9.32E-02	2.66E-05
	T	2.43E-07	4.02E-06	2.58E-05	2.58E-05	2.12E-05	3.17E-05	2.19E-05	3.06E-06	3.48E-08	1.16E-01	6.47E-05
UTERUS	G	6.01E-04	1.68E-05	1.71E-05	1.71E-05	6.34E-05	1.91E-05	1.25E-05	1.18E-05	7.52E-45	2.28E-07	6.28E-05
	B	0.0	0.0	0.0	0.0	0.0	0.0	0.0	0.0	0.0	0.0	2.66E-05
	T	6.01E-04	1.68E-05	1.71E-05	1.71E-05	6.34E-05	1.91E-05	1.25E-05	1.18E-05	7.52E-45	2.28E-07	8.94E-05
T BODY	G	6.28E-05	6.15E-05	4.56E-05	4.56E-05	5.02E-05	4.01E-05	2.61E-05	5.25E-05	4.27E-05	3.99E-05	4.45E-05
	B	2.66E-05	2.66E-05	2.66E-05	2.66E-05	2.66E-05	2.66E-05	2.66E-05	2.66E-05	2.66E-05	2.66E-05	2.66E-05
	T	8.94E-05	8.81E-05	7.23E-05	7.23E-05	7.69E-05	6.67E-05	5.27E-05	7.91E-05	6.93E-05	6.65E-05	7.11E-05

*"MUSCLE" VALUES MAY BE USED FOR "SEPARABLE FAT" WITH ADJUSTMENT (SEE TEXT)
PRINCIPLE REFERENCE-LI-SCHOLZ, A. AND BAKHRU, H., PHYS. REV. 177, 1629 (1967)
DATE DECAY DATA REVIEWED-FEBRUARY 1972

S, AVERAGE DOSE EQUIVALENT PER UNIT ACCUMULATED ACTIVITY (REM/UCI-DAY), FOR 31-GALLIUM-68 (TR=6.830E 01 MIN)

DATE OF TABLE 11-27-74

TARGET ORGANS		SOURCE ORGANS										
		ADRENALS	BLAD CON	S CONT	SI+CONT	ULI CONT	LLI CONT	KIDNEYS	LIVER	LUNG	RESP LYM NODE	MUSCLE*
ADRENALS	G	7.73E-02	3.89E-05	3.55E-04	2.06E-04	1.70E-04	8.27E-05	2.07E-03	8.12E-04	4.05E-04	4.05E-04	2.55E-04
	B	2.70E 00	0.0	0.0	0.0	0.0	0.0	0.0	0.0	0.0	0.0	0.0
	T	2.78E 00	3.89E-05	3.55E-04	2.06E-04	1.70E-04	8.27E-05	2.07E-03	8.12E-04	4.05E-04	4.05E-04	2.55E-04
BLAD WALL	G	1.94E-05	1.24E-02	7.68E-05	5.59E-04	3.19E-04	9.33E-04	6.47E-05	5.69E-05	1.26E-05	1.26E-05	2.97E-04
	B	0.0	9.45E-02	0.0	0.0	0.0	0.0	0.0	0.0	0.0	0.0	0.0
	T	1.94E-05	1.07E-01	7.68E-05	5.59E-04	3.19E-04	9.33E-04	6.47E-05	5.69E-05	1.26E-05	1.26E-05	2.97E-04
GI TRACT S WALL	G	4.91E-04	5.57E-05	8.66E-03	5.65E-04	6.01E-04	2.99E-04	5.59E-04	3.16E-04	3.07E-04	3.07E-04	2.34E-04
	B	0.0	0.0	7.56E-02	0.0	0.0	0.0	0.0	0.0	0.0	0.0	0.0
	T	4.91E-04	5.57E-05	8.42E-02	5.65E-04	6.01E-04	2.99E-04	5.59E-04	3.16E-04	3.07E-04	3.07E-04	2.34E-04
SI+CONT	G	1.60E-04	4.36E-04	4.38E-04	5.17E-03	2.71E-03	1.48E-03	4.57E-04	2.64E-04	4.69E-05	4.69E-05	2.58E-04
	B	0.0	0.0	0.0	4.72E-02	0.0	0.0	0.0	0.0	0.0	0.0	0.0
	T	1.60E-04	4.36E-04	4.38E-04	5.24E-02	2.71E-03	1.48E-03	4.57E-04	2.64E-04	4.69E-05	4.69E-05	2.58E-04
ULI WALL	G	1.75E-04	3.92E-04	5.46E-04	3.80E-03	7.11E-03	7.01E-04	4.79E-04	4.26E-04	6.44E-05	6.44E-05	2.72E-04
	B	0.0	0.0	0.0	0.0	8.59E-02	0.0	0.0	0.0	0.0	0.0	0.0
	T	1.75E-04	3.92E-04	5.46E-04	3.80E-03	9.30E-02	7.01E-04	4.79E-04	4.26E-04	6.44E-05	6.44E-05	2.72E-04
LLI WALL	G	5.88E-05	1.18E-03	2.12E-04	1.12E-03	5.01E-04	8.58E-03	1.47E-04	5.40E-05	1.32E-05	1.32E-05	2.83E-04
	B	0.0	0.0	0.0	0.0	0.0	1.40E-01	0.0	0.0	0.0	0.0	0.0
	T	5.88E-05	1.18E-03	2.12E-04	1.12E-03	5.01E-04	1.49E-01	1.47E-04	5.40E-05	1.32E-05	1.32E-05	2.83E-04
KIDNEYS	G	1.91E-03	6.45E-05	5.47E-04	5.28E-04	4.53E-04	1.39E-04	1.22E-02	6.26E-04	1.75E-04	1.75E-04	2.39E-04
	B	0.0	0.0	0.0	0.0	0.0	0.0	1.22E-01	0.0	0.0	0.0	0.0
	T	1.91E-03	6.45E-05	5.47E-04	5.28E-04	4.53E-04	1.39E-04	1.34E-01	6.26E-04	1.75E-04	1.75E-04	2.39E-04
LIVER	G	8.13E-04	4.76E-05	3.39E-04	3.01E-04	4.09E-04	5.84E-05	6.65E-04	4.29E-03	3.96E-04	3.96E-04	1.87E-04
	B	0.0	0.0	0.0	0.0	0.0	0.0	0.0	2.10E-02	0.0	0.0	0.0
	T	8.13E-04	4.76E-05	3.39E-04	3.01E-04	4.09E-04	5.84E-05	6.65E-04	2.53E-02	3.96E-04	3.96E-04	1.87E-04
LUNGS	G	3.87E-04	8.41E-06	3.09E-04	5.63E-05	5.76E-05	1.76E-05	1.59E-04	3.99E-04	2.44E-03	2.44E-03	2.24E-04
	B	0.0	0.0	0.0	0.0	0.0	0.0	0.0	0.0	3.78E-02	3.78E-02	0.0
	T	3.87E-04	8.41E-06	3.09E-04	5.63E-05	5.76E-05	1.76E-05	1.59E-04	3.99E-04	4.02E-02	4.02E-02	2.24E-04
RESP LYM NODE	G	3.87E-04	8.41E-06	3.09E-04	5.63E-05	5.76E-05	1.76E-05	1.59E-04	3.99E-04	2.43E-03	2.44E-03	2.24E-04
	B	0.0	0.0	0.0	0.0	0.0	0.0	0.0	0.0	3.78E-02	2.52E 00	0.0
	T	3.87E-04	8.41E-06	3.09E-04	5.63E-05	5.76E-05	1.76E-05	1.59E-04	3.99E-04	4.02E-02	2.52E 00	2.24E-04
MUSCLE*	G	2.55E-04	2.97E-04	2.34E-04	2.58E-04	2.47E-04	2.83E-04	2.39E-04	1.87E-04	2.24E-04	2.24E-04	2.53E-04
	B	0.0	0.0	0.0	0.0	0.0	0.0	0.0	0.0	0.0	0.0	1.35E-03
	T	2.55E-04	2.97E-04	2.34E-04	2.58E-04	2.47E-04	2.83E-04	2.39E-04	1.87E-04	2.24E-04	2.24E-04	1.60E-03
OVARIES	G	9.06E-05	1.03E-03	9.19E-05	1.46E-03	2.07E-03	2.64E-03	1.96E-04	3.76E-05	2.58E-05	2.58E-05	3.31E-04
	B	0.0	0.0	0.0	0.0	0.0	0.0	0.0	0.0	0.0	0.0	0.0
	T	9.06E-05	1.03E-03	9.19E-05	1.46E-03	2.07E-03	2.64E-03	1.96E-04	3.76E-05	2.58E-05	2.58E-05	3.31E-04

31-GALLIUM-68 CONTINUED

TARGET ORGANS		SOURCE ORGANS										
		ADRENALS	BLAD CON	S CONT	SI+CONT	ULI CONT	LLI CONT	KIDNEYS	LIVER	LUNG	RESP LYM NODE	MUSCLE*
PANCREAS	G	1.40E-03	4.37E-05	2.90E-03	3.46E-04	2.99E-04	1.25E-04	1.09E-03	7.96E-04	4.61E-04	4.61E-04	3.00E-04
	B	0.0	0.0	0.0	0.0	0.0	0.0	0.0	0.0	0.0	0.0	0.0
	T	1.40E-03	4.37E-05	2.90E-03	3.46E-04	2.99E-04	1.25E-04	1.09E-03	7.96E-04	4.61E-04	4.61E-04	3.00E-04
SKELETON BONE	G	2.27E-04	9.79E-05	1.01E-04	1.30E-04	1.20E-04	1.73E-04	1.64E-04	1.22E-04	1.67E-04	1.67E-04	1.85E-04
	B	0.0	0.0	0.0	0.0	0.0	0.0	0.0	0.0	0.0	0.0	0.0
	T	2.27E-04	9.79E-05	1.01E-04	1.30E-04	1.20E-04	1.73E-04	1.64E-04	1.22E-04	1.67E-04	1.67E-04	1.85E-04
R MARROW	G	4.07E-04	2.09E-04	1.74E-04	4.14E-04	3.59E-04	5.19E-04	4.15E-04	1.80E-04	2.10E-04	2.10E-04	2.29E-04
	B	0.0	0.0	0.0	0.0	0.0	0.0	0.0	0.0	0.0	0.0	0.0
	T	4.07E-04	2.09E-04	1.74E-04	4.14E-04	3.59E-04	5.19E-04	4.15E-04	1.80E-04	2.10E-04	2.10E-04	2.29E-04
Y MARROW	G	2.20E-04	8.96E-05	1.40E-04	1.81E-04	1.71E-04	2.15E-04	2.04E-04	1.79E-04	1.76E-04	1.76E-04	1.87E-04
	B	0.0	0.0	0.0	0.0	0.0	0.0	0.0	0.0	0.0	0.0	0.0
	T	2.20E-04	8.96E-05	1.40E-04	1.81E-04	1.71E-04	2.15E-04	2.04E-04	1.79E-04	1.76E-04	1.76E-04	1.87E-04
T E CL	G	2.27E-04	9.79E-05	1.01E-04	1.30E-04	1.20E-04	1.73E-04	1.64E-04	1.22E-04	1.67E-04	1.67E-04	1.85E-04
	B	0.0	0.0	0.0	0.0	0.0	0.0	0.0	0.0	0.0	0.0	0.0
	T	2.27E-04	9.79E-05	1.01E-04	1.30E-04	1.20E-04	1.73E-04	1.64E-04	1.22E-04	1.67E-04	1.67E-04	1.85E-04
SKIN	G	1.14E-04	1.09E-04	9.93E-05	8.93E-05	9.31E-05	9.86E-05	1.11E-04	1.01E-04	1.14E-04	1.14E-04	1.53E-04
	B	0.0	0.0	0.0	0.0	0.0	0.0	0.0	0.0	0.0	0.0	0.0
	T	1.14E-04	1.09E-04	9.93E-05	8.93E-05	9.31E-05	9.86E-05	1.11E-04	1.01E-04	1.14E-04	1.14E-04	1.53E-04
SPLEEN	G	1.07E-03	3.81E-05	1.58E-03	2.62E-04	2.06E-04	1.58E-04	1.38E-03	1.68E-04	3.55E-04	3.55E-04	2.46E-04
	B	0.0	0.0	0.0	0.0	0.0	0.0	0.0	0.0	0.0	0.0	0.0
	T	1.07E-03	3.81E-05	1.58E-03	2.62E-04	2.06E-04	1.58E-04	1.38E-03	1.68E-04	3.55E-04	3.55E-04	2.46E-04
TESTES	G	1.21E-05	8.47E-04	5.40E-06	6.21E-05	8.66E-05	3.41E-04	2.54E-05	2.03E-05	4.22E-06	4.22E-06	2.07E-04
	B	0.0	0.0	0.0	0.0	0.0	0.0	0.0	0.0	0.0	0.0	0.0
	T	1.21E-05	8.47E-04	5.40E-06	6.21E-05	8.66E-05	3.41E-04	2.54E-05	2.03E-05	4.22E-06	4.22E-06	2.07E-04
THYMUS	G	1.56E-04	5.48E-06	4.39E-05	2.36E-05	2.58E-05	9.93E-06	6.55E-05	2.19E-04	6.14E-04	6.14E-04	2.78E-04
	B	0.0	0.0	0.0	0.0	0.0	0.0	0.0	0.0	0.0	0.0	0.0
	T	1.56E-04	5.48E-06	4.39E-05	2.36E-05	2.58E-05	9.93E-06	6.55E-05	2.19E-04	6.14E-04	6.14E-04	2.78E-04
THYROID	G	3.34E-05	1.67E-06	2.57E-05	6.85E-06	7.33E-06	3.15E-06	1.61E-05	3.09E-05	2.03E-04	2.03E-04	2.30E-04
	B	0.0	0.0	0.0	0.0	0.0	0.0	0.0	0.0	0.0	0.0	0.0
	T	3.34E-05	1.67E-06	2.57E-05	6.85E-06	7.33E-06	3.15E-06	1.61E-05	3.09E-05	2.03E-04	2.03E-04	2.30E-04
UTERUS	G	6.36E-05	2.47E-03	1.50E-04	1.44E-03	7.46E-04	9.25E-04	1.39E-04	7.33E-05	1.64E-05	1.64E-05	3.20E-04
	B	0.0	0.0	0.0	0.0	0.0	0.0	0.0	0.0	0.0	0.0	0.0
	T	6.36E-05	2.47E-03	1.50E-04	1.44E-03	7.46E-04	9.25E-04	1.39E-04	7.33E-05	1.64E-05	1.64E-05	3.20E-04
T BODY	G	2.81E-04	3.12E-04	2.96E-04	3.26E-04	3.18E-04	3.16E-04	2.83E-04	2.84E-04	2.42E-04	2.42E-04	2.41E-04
	B	5.40E-04	6.07E-05	1.62E-04	4.32E-04	2.58E-04	3.20E-04	5.40E-04	5.40E-04	5.40E-04	5.40E-04	5.40E-04
	T	8.20E-04	3.73E-04	4.58E-04	7.58E-04	5.76E-04	6.36E-04	8.23E-04	8.24E-04	7.82E-04	7.82E-04	7.81E-04

CONTINUED NEXT PAGE

31-GALLIUM-68 CONTINUED

SOURCE ORGANS

TARGET ORGANS		OVARIES	PANCREAS	COR BONE	CAN BONE	R MARROW	Y MARROW	SKIN	SPLEEN	TESTES	THYROID	T BODY
ADRENALS	G	1.02E-04	1.40E-03	2.85E-04	2.85E-04	2.96E-04	1.75E-04	1.11E-04	1.01E-03	1.21E-05	3.34E-05	3.81E-04
	B	0.0	0.0	0.0	0.0	0.0	0.0	0.0	0.0	0.0	0.0	5.40E-04
	T	1.02E-04	1.40E-03	2.85E-04	2.85E-04	2.96E-04	1.75E-04	1.11E-04	1.01E-03	1.21E-05	3.34E-05	9.21E-04
BLAD WALL	G	1.11E-03	3.26E-05	1.09E-04	1.09E-04	1.17E-04	4.36E-05	1.06E-04	2.42E-05	8.49E-04	1.68E-06	3.05E-04
	B	0.0	0.0	0.0	0.0	0.0	0.0	0.0	0.0	0.0	0.0	5.40E-04
	T	1.11E-03	3.26E-05	1.09E-04	1.09E-04	1.17E-04	4.36E-05	1.06E-04	2.42E-05	8.49E-04	1.68E-06	8.44E-04
GI TRACT S WALL	G	1.40E-04	2.82E-03	9.77E-05	9.77E-05	1.67E-04	1.24E-04	1.09E-04	1.63E-03	1.95E-05	2.17E-05	2.97E-04
	B	0.0	0.0	0.0	0.0	0.0	0.0	0.0	0.0	0.0	0.0	5.40E-04
	T	1.40E-04	2.82E-03	9.77E-05	9.77E-05	1.67E-04	1.24E-04	1.09E-04	1.63E-03	1.95E-05	2.17E-05	8.36E-04
SI+CONT	G	1.96E-03	2.94E-04	1.35E-04	1.35E-04	4.48E-04	1.76E-04	9.28E-05	2.31E-04	8.98E-05	1.56E-06	3.30E-04
	B	0.0	0.0	0.0	0.0	0.0	0.0	0.0	0.0	0.0	0.0	5.40E-04
	T	1.96E-03	2.94E-04	1.35E-04	1.35E-04	4.48E-04	1.76E-04	9.28E-05	2.31E-04	8.98E-05	1.56E-06	8.70E-04
ULI WALL	G	1.84E-03	3.60E-04	1.17E-04	1.17E-04	3.44E-04	1.43E-04	9.79E-05	2.33E-04	5.45E-05	2.14E-06	3.26E-04
	B	0.0	0.0	0.0	0.0	0.0	0.0	0.0	0.0	0.0	0.0	5.40E-04
	T	1.84E-03	3.60E-04	1.17E-04	1.17E-04	3.44E-04	1.43E-04	9.79E-05	2.33E-04	5.45E-05	2.14E-06	8.66E-04
LLI WALL	G	2.35E-03	8.96E-05	1.58E-04	1.58E-04	5.13E-04	1.38E-04	1.01E-04	1.16E-04	4.71E-04	2.63E-06	3.31E-04
	B	0.0	0.0	0.0	0.0	0.0	0.0	0.0	0.0	0.0	0.0	5.40E-04
	T	2.35E-03	8.96E-05	1.58E-04	1.58E-04	5.13E-04	1.38E-04	1.01E-04	1.16E-04	4.71E-04	2.63E-06	8.71E-04
KIDNEYS	G	1.90E-04	1.03E-03	1.54E-04	1.54E-04	3.97E-04	2.03E-04	1.26E-04	1.41E-03	1.76E-05	9.01E-06	2.94E-04
	B	0.0	0.0	0.0	0.0	0.0	0.0	0.0	0.0	0.0	0.0	5.40E-04
	T	1.90E-04	1.03E-03	1.54E-04	1.54E-04	3.97E-04	2.03E-04	1.26E-04	1.41E-03	1.76E-05	9.01E-06	8.34E-04
LIVER	G	1.03E-04	6.83E-04	1.18E-04	1.18E-04	1.70E-04	1.83E-04	1.14E-04	1.79E-04	9.19E-06	2.71E-05	2.91E-04
	B	0.0	0.0	0.0	0.0	0.0	0.0	0.0	0.0	0.0	0.0	5.40E-04
	T	1.03E-04	6.83E-04	1.18E-04	1.18E-04	1.70E-04	1.83E-04	1.14E-04	1.79E-04	9.19E-06	2.71E-05	8.31E-04
LUNGS	G	1.94E-05	3.97E-04	1.64E-04	1.64E-04	2.01E-04	1.67E-04	1.14E-04	3.66E-04	2.58E-06	1.79E-04	2.58E-04
	B	0.0	0.0	0.0	0.0	0.0	0.0	0.0	0.0	0.0	0.0	5.40E-04
	T	1.94E-05	3.97E-04	1.64E-04	1.64E-04	2.01E-04	1.67E-04	1.14E-04	3.66E-04	2.58E-06	1.79E-04	7.98E-04
RESP LYM NODE	G	1.94E-05	3.97E-04	1.64E-04	1.64E-04	2.01E-04	1.67E-04	1.14E-04	3.66E-04	2.58E-06	1.79E-04	2.58E-04
	B	0.0	0.0	0.0	0.0	0.0	0.0	0.0	0.0	0.0	0.0	5.40E-04
	T	1.94E-05	3.97E-04	1.64E-04	1.64E-04	2.01E-04	1.67E-04	1.14E-04	3.66E-04	2.58E-06	1.79E-04	7.98E-04
MUSCLE*	G	3.31E-04	3.00E-04	1.85E-04	1.85E-04	2.18E-04	1.73E-04	1.53E-04	2.46E-04	2.07E-04	2.30E-04	2.41E-04
	B	0.0	0.0	0.0	0.0	0.0	0.0	0.0	0.0	0.0	0.0	5.40E-04
	T	3.31E-04	3.00E-04	1.85E-04	1.85E-04	2.18E-04	1.73E-04	1.53E-04	2.46E-04	2.07E-04	2.30E-04	7.81E-04
OVARIES	G	1.28E-01	6.85E-05	1.80E-04	1.80E-04	5.96E-04	1.42E-04	5.28E-05	1.74E-04	6.17E-46	3.13E-06	2.80E-04
	B	3.44E 00	0.0	0.0	0.0	0.0	0.0	0.0	0.0	0.0	0.0	5.40E-04
	T	3.56E 00	6.85E-05	1.80E-04	1.80E-04	5.96E-04	1.42E-04	5.28E-05	1.74E-04	6.17E-46	3.13E-06	8.20E-04

31-GALLIUM-68 CONTINUED

TARGET ORGANS		SOURCE ORGANS										
		OVARIES	PANCREAS	COR BONE	CAN BONE	R MARROW	Y MARROW	SKIN	SPLEEN	TESTES	THYROID	T BODY
PANCREAS	G	9.55E-05	3.55E-02	1.52E-04	1.52E-04	2.82E-04	2.18E-04	9.73E-05	3.23E-03	6.99E-06	1.17E-05	2.88E-04
	B	0.0	3.78E-01	0.0	0.0	0.0	0.0	0.0	0.0	0.0	0.0	5.40E-04
	T	9.55E-05	4.13E-01	1.52E-04	1.52E-04	2.82E-04	2.18E-04	9.73E-05	3.23E-03	6.99E-06	1.17E-05	8.28E-04
SKELETON BONE	G	1.54E-04	1.53E-04	5.79E-04	5.79E-04	3.88E-04	4.30E-04	1.42E-04	1.28E-04	1.10E-04	1.26E-04	2.50E-04
	B	0.0	0.0	7.56E-03	4.29E-03	2.18E-03	0.0	0.0	0.0	0.0	0.0	5.40E-04
	T	1.54E-04	1.53E-04	8.14E-03	4.87E-03	2.57E-03	4.30E-04	1.42E-04	1.28E-04	1.10E-04	1.26E-04	7.89E-04
R MARROW	G	5.12E-04	2.88E-04	5.16E-04	5.16E-04	1.24E-03	4.47E-04	1.32E-04	1.89E-04	8.78E-05	1.40E-04	2.75E-04
	B	0.0	0.0	5.72E-04	1.09E-02	1.79E-02	0.0	0.0	0.0	0.0	0.0	5.40E-04
	T	5.12E-04	2.88E-04	1.09E-03	1.14E-02	1.92E-02	4.47E-04	1.32E-04	1.89E-04	8.78E-05	1.40E-04	8.15E-04
Y MARROW	G	2.05E-04	1.80E-04	4.99E-04	4.99E-04	4.78E-04	7.31E-04	1.50E-04	1.93E-04	4.75E-05	6.70E-05	2.33E-04
	B	0.0	0.0	0.0	0.0	0.0	2.52E-02	0.0	0.0	0.0	0.0	5.40E-04
	T	2.05E-04	1.80E-04	4.99E-04	4.99E-04	4.78E-04	2.59E-02	1.50E-04	1.93E-04	4.75E-05	6.70E-05	7.73E-04
T E CL	G	1.54E-04	1.53E-04	5.79E-04	5.79E-04	5.24E-04	4.76E-04	1.42E-04	1.28E-04	1.10E-04	1.26E-04	2.50E-04
	B	0.0	0.0	4.70E-03	6.78E-03	8.08E-03	6.30E-03	0.0	0.0	0.0	0.0	5.40E-04
	T	1.54E-04	1.53E-04	5.28E-03	7.36E-03	8.60E-03	6.78E-03	1.42E-04	1.28E-04	1.10E-04	1.26E-04	7.90E-04
SKIN	G	8.83E-05	8.52E-05	1.46E-04	1.46E-04	1.25E-04	1.63E-04	3.41E-04	1.06E-04	2.66E-04	1.45E-04	1.51E-04
	B	0.0	0.0	0.0	0.0	0.0	0.0	1.45E-02	0.0	0.0	0.0	5.40E-04
	T	8.83E-05	8.52E-05	1.46E-04	1.46E-04	1.25E-04	1.63E-04	1.49E-02	1.06E-04	2.66E-04	1.45E-04	6.91E-04
SPLEEN	G	1.16E-04	3.18E-03	1.41E-04	1.41E-04	1.36E-04	1.65E-04	1.11E-04	2.18E-02	2.15E-05	2.22E-05	2.98E-04
	B	0.0	0.0	0.0	0.0	0.0	0.0	0.0	2.10E-01	0.0	0.0	5.40E-04
	T	1.16E-04	3.18E-03	1.41E-04	1.41E-04	1.36E-04	1.65E-04	1.11E-04	2.32E-01	2.15E-05	2.22E-05	8.38E-04
TESTES	G	6.17E-46	1.11E-05	9.71E-05	9.71E-05	7.22E-05	1.62E-04	1.40E-04	1.62E-05	6.00E-02	6.11E-07	3.13E-04
	B	0.0	0.0	0.0	0.0	0.0	0.0	0.0	0.0	1.08E 00	0.0	5.40E-04
	T	6.17E-46	1.11E-05	9.71E-05	9.71E-05	7.22E-05	1.62E-04	1.40E-04	1.62E-05	1.14E 00	6.11E-07	8.53E-04
THYMUS	G	1.04E-05	8.90E-05	1.28E-04	1.28E-04	7.70E-05	6.20E-05	1.44E-04	8.18E-05	1.95E-06	7.31E-04	2.52E-04
	B	0.0	0.0	0.0	0.0	0.0	0.0	0.0	0.0	0.0	0.0	5.40E-04
	T	1.04E-05	8.90E-05	1.28E-04	1.28E-04	7.70E-05	6.20E-05	1.44E-04	8.18E-05	1.95E-06	7.31E-04	7.92E-04
THYROID	G	3.13E-06	3.02E-05	1.82E-04	1.82E-04	1.52E-04	7.45E-05	1.39E-04	2.50E-05	6.11E-07	8.10E-02	2.41E-04
	B	0.0	0.0	0.0	0.0	0.0	0.0	0.0	0.0	0.0	1.89E 00	5.40E-04
	T	3.13E-06	3.02E-05	1.82E-04	1.82E-04	1.52E-04	7.45E-05	1.39E-04	2.50E-05	6.11E-07	1.97E 00	7.81E-04
UTERUS	G	2.98E-03	1.05E-04	9.89E-05	9.89E-05	3.16E-04	1.11E-04	9.69E-05	7.92E-05	6.17E-46	2.97E-06	2.95E-04
	B	0.0	0.0	0.0	0.0	0.0	0.0	0.0	0.0	0.0	0.0	5.40E-04
	T	2.98E-03	1.05E-04	9.89E-05	9.89E-05	3.16E-04	1.11E-04	9.69E-05	7.92E-05	6.17E-46	2.97E-06	8.35E-04
T BODY	G	3.33E-04	3.26E-04	2.39E-04	2.39E-04	2.66E-04	2.15E-04	1.53E-04	2.82E-04	2.38E-04	2.18E-04	2.41E-04
	B	5.40E-04	5.40E-04	5.40E-04	5.40E-04	5.40E-04	5.40E-04	5.40E-04	5.40E-04	5.40E-04	5.40E-04	5.40E-04
	T	8.73E-04	8.66E-04	7.79E-04	7.79E-04	8.06E-04	7.55E-04	6.93E-04	8.22E-04	7.78E-04	7.58E-04	7.81E-04

*"MUSCLE" VALUES MAY BE USED FOR "SEPARABLE FAT" WITH ADJUSTMENT (SEE TEXT)
PRINCIPLE REFERENCE-CARTER, H. K. ET AL., PHYS. REV. 174, 1329 (1968)
DATE DECAY DATA REVIEWED-FEBRUARY 1972

S, AVERAGE DOSE EQUIVALENT PER UNIT ACCUMULATED ACTIVITY (REM/UCI-DAY), FOR 31-GALLIUM-72 (TR=1.410E 01 HOURS)

DATE OF TABLE 11-27-74

TARGET ORGANS		SOURCE ORGANS										
		ADRENALS	BLAD CON	S CONT	SI+CONT	ULI CONT	LLI CONT	KIDNEYS	LIVER	LUNG	RESP LYM NODE	MUSCLE*
ADRENALS	G	1.95E-01	1.14E-04	1.05E-03	5.60E-04	4.94E-04	2.18E-04	4.97E-03	2.19E-03	8.08E-04	8.08E-04	6.53E-04
	B	1.84E 00	0.0	0.0	0.0	0.0	0.0	0.0	0.0	0.0	0.0	0.0
	T	2.03E 00	1.14E-04	1.05E-03	5.60E-04	4.94E-04	2.18E-04	4.97E-03	2.19E-03	8.08E-04	8.08E-04	6.53E-04
BLAD WALL	G	1.13E-04	2.95E-02	1.90E-04	1.15E-03	9.29E-04	2.33E-03	1.92E-04	1.19E-04	4.40E-05	4.40E-05	7.53E-04
	B	0.0	6.44E-02	0.0	0.0	0.0	0.0	0.0	0.0	0.0	0.0	0.0
	T	1.13E-04	9.39E-02	1.90E-04	1.15E-03	9.29E-04	2.33E-03	1.92E-04	1.19E-04	4.40E-05	4.40E-05	7.53E-04
GI TRACT S WALL	G	1.15E-03	2.30E-04	2.13E-02	1.46E-03	1.49E-03	7.45E-04	1.42E-03	8.61E-04	8.50E-04	8.50E-04	6.04E-04
	B	0.0	0.0	5.15E-02	0.0	0.0	0.0	0.0	0.0	0.0	0.0	0.0
	T	1.15E-03	2.30E-04	7.28E-02	1.46E-03	1.49E-03	7.45E-04	1.42E-03	8.61E-04	8.50E-04	8.50E-04	6.04E-04
SI+CONT	G	4.37E-04	1.18E-03	1.10E-03	1.25E-02	6.46E-03	3.71E-03	1.19E-03	6.84E-04	1.52E-04	1.52E-04	6.57E-04
	B	0.0	0.0	0.0	3.22E-02	0.0	0.0	0.0	0.0	0.0	0.0	0.0
	T	4.37E-04	1.18E-03	1.10E-03	4.47E-02	6.46E-03	3.71E-03	1.19E-03	6.84E-04	1.52E-04	1.52E-04	6.57E-04
ULI WALL	G	4.86E-04	8.76E-04	1.31E-03	9.39E-03	1.78E-02	1.68E-03	1.16E-03	1.02E-03	1.94E-04	1.94E-04	6.94E-04
	B	0.0	0.0	0.0	0.0	5.85E-02	0.0	0.0	0.0	0.0	0.0	0.0
	T	4.86E-04	8.76E-04	1.31E-03	9.39E-03	7.63E-02	1.68E-03	1.16E-03	1.02E-03	1.94E-04	1.94E-04	6.94E-04
LLI WALL	G	1.62E-04	2.88E-03	5.78E-04	2.92E-03	1.27E-03	2.10E-02	4.06E-04	1.41E-04	3.71E-05	3.71E-05	7.21E-04
	B	0.0	0.0	0.0	0.0	0.0	9.54E-02	0.0	0.0	0.0	0.0	0.0
	T	1.62E-04	2.88E-03	5.78E-04	2.92E-03	1.27E-03	1.16E-01	4.06E-04	1.41E-04	3.71E-05	3.71E-05	7.21E-04
KIDNEYS	G	4.67E-03	1.78E-04	1.36E-03	1.29E-03	1.15E-03	4.40E-04	2.95E-02	1.58E-03	4.07E-04	4.07E-04	6.19E-04
	B	0.0	0.0	0.0	0.0	0.0	0.0	8.31E-02	0.0	0.0	0.0	0.0
	T	4.67E-03	1.78E-04	1.36E-03	1.29E-03	1.15E-03	4.40E-04	1.13E-01	1.58E-03	4.07E-04	4.07E-04	6.19E-04
LIVER	G	2.01E-03	1.49E-04	8.72E-04	7.95E-04	1.07E-03	1.76E-04	1.63E-03	1.04E-02	9.94E-04	9.94E-04	4.84E-04
	B	0.0	0.0	0.0	0.0	0.0	0.0	0.0	1.43E-02	0.0	0.0	0.0
	T	2.01E-03	1.49E-04	8.72E-04	7.95E-04	1.07E-03	1.76E-04	1.63E-03	2.47E-02	9.94E-04	9.94E-04	4.84E-04
LUNGS	G	1.00E-03	4.12E-05	7.50E-04	1.61E-04	1.80E-04	8.43E-05	4.22E-04	1.03E-03	5.92E-03	5.92E-03	5.65E-04
	B	0.0	0.0	0.0	0.0	0.0	0.0	0.0	0.0	2.58E-02	2.58E-02	0.0
	T	1.00E-03	4.12E-05	7.50E-04	1.61E-04	1.80E-04	8.43E-05	4.22E-04	1.03E-03	3.17E-02	3.17E-02	5.65E-04
RESP LYM NODE	G	1.00E-03	4.12E-05	7.50E-04	1.61E-04	1.80E-04	8.43E-05	4.22E-04	1.03E-03	5.92E-03	5.92E-03	5.65E-04
	B	0.0	0.0	0.0	0.0	0.0	0.0	0.0	0.0	2.58E-02	1.72E 00	0.0
	T	1.00E-03	4.12E-05	7.50E-04	1.61E-04	1.80E-04	8.43E-05	4.22E-04	1.03E-03	3.17E-02	1.72E 00	5.65E-04
MUSCLE*	G	6.53E-04	7.53E-04	6.04E-04	6.57E-04	6.36E-04	7.21E-04	6.19E-04	4.84E-04	5.65E-04	5.65E-04	6.48E-04
	B	0.0	0.0	0.0	0.0	0.0	0.0	0.0	0.0	0.0	0.0	9.20E-04
	T	6.53E-04	7.53E-04	6.04E-04	6.57E-04	6.36E-04	7.21E-04	6.19E-04	4.84E-04	5.65E-04	5.65E-04	1.57E-03
OVARIES	G	2.26E-04	2.35E-03	4.59E-04	3.77E-03	4.17E-03	6.90E-03	5.49E-04	2.93E-04	7.97E-05	7.97E-05	8.38E-04
	B	0.0	0.0	0.0	0.0	0.0	0.0	0.0	0.0	0.0	0.0	0.0
	T	2.26E-04	2.35E-03	4.59E-04	3.77E-03	4.17E-03	6.90E-03	5.49E-04	2.93E-04	7.97E-05	7.97E-05	8.38E-04

31-GALLIUM-72 CONTINUED

TARGET ORGANS		SOURCE ORGANS										
		ADRENALS	BLAD CON	S CONT	SI+CONT	ULI CONT	LLI CONT	KIDNEYS	LIVER	LUNG	RESP LYM NODE	MUSCLE*
PANCREAS	G	3.59E-03	1.54E-04	6.80E-03	8.52E-04	9.46E-04	3.29E-04	2.61E-03	1.70E-03	9.73E-04	9.73E-04	7.57E-04
	B	0.0	0.0	0.0	0.0	0.0	0.0	0.0	0.0	0.0	0.0	0.0
	T	3.59E-03	1.54E-04	6.80E-03	8.52E-04	9.46E-04	3.29E-04	2.61E-03	1.70E-03	9.73E-04	9.73E-04	7.57E-04
SKELETON BONE	G	5.70E-04	2.46E-04	2.55E-04	3.33E-04	2.99E-04	4.34E-04	4.11E-04	3.14E-04	4.23E-04	4.23E-04	4.85E-04
	B	0.0	0.0	0.0	0.0	0.0	0.0	0.0	0.0	0.0	0.0	0.0
	T	5.70E-04	2.46E-04	2.55E-04	3.33E-04	2.99E-04	4.34E-04	4.11E-04	3.14E-04	4.23E-04	4.23E-04	4.85E-04
R MARROW	G	1.01E-03	5.03E-04	4.22E-04	1.01E-03	8.66E-04	1.26E-03	1.02E-03	4.50E-04	5.35E-04	5.35E-04	5.69E-04
	B	0.0	0.0	0.0	0.0	0.0	0.0	0.0	0.0	0.0	0.0	0.0
	T	1.01E-03	5.03E-04	4.22E-04	1.01E-03	8.66E-04	1.26E-03	1.02E-03	4.50E-04	5.35E-04	5.35E-04	5.69E-04
Y MARROW	G	5.61E-04	2.32E-04	3.55E-04	4.56E-04	4.19E-04	5.32E-04	5.06E-04	4.62E-04	4.45E-04	4.45E-04	4.63E-04
	B	0.0	0.0	0.0	0.0	0.0	0.0	0.0	0.0	0.0	0.0	0.0
	T	5.61E-04	2.32E-04	3.55E-04	4.56E-04	4.19E-04	5.32E-04	5.06E-04	4.62E-04	4.45E-04	4.45E-04	4.63E-04
T E CL	G	5.70E-04	2.46E-04	2.55E-04	3.33E-04	2.99E-04	4.34E-04	4.11E-04	3.14E-04	4.23E-04	4.23E-04	4.85E-04
	B	0.0	0.0	0.0	0.0	0.0	0.0	0.0	0.0	0.0	0.0	0.0
	T	5.70E-04	2.46E-04	2.55E-04	3.33E-04	2.99E-04	4.34E-04	4.11E-04	3.14E-04	4.23E-04	4.23E-04	4.85E-04
SKIN	G	3.12E-04	3.05E-04	2.83E-04	2.53E-04	2.57E-04	2.83E-04	3.03E-04	2.86E-04	3.06E-04	3.06E-04	4.09E-04
	B	0.0	0.0	0.0	0.0	0.0	0.0	0.0	0.0	0.0	0.0	0.0
	T	3.12E-04	3.05E-04	2.83E-04	2.53E-04	2.57E-04	2.83E-04	3.03E-04	2.86E-04	3.06E-04	3.06E-04	4.09E-04
SPLEEN	G	2.54E-03	1.25E-04	3.83E-03	6.95E-04	5.71E-04	4.49E-04	3.39E-03	4.59E-04	9.14E-04	9.14E-04	6.27E-04
	B	0.0	0.0	0.0	0.0	0.0	0.0	0.0	0.0	0.0	0.0	0.0
	T	2.54E-03	1.25E-04	3.83E-03	6.95E-04	5.71E-04	4.49E-04	3.39E-03	4.59E-04	9.14E-04	9.14E-04	6.27E-04
TESTES	G	4.35E-05	2.07E-03	6.93E-05	2.49E-04	2.43E-04	7.85E-04	7.99E-05	8.06E-05	1.87E-05	1.87E-05	5.89E-04
	B	0.0	0.0	0.0	0.0	0.0	0.0	0.0	0.0	0.0	0.0	0.0
	T	4.35E-05	2.07E-03	6.93E-05	2.49E-04	2.43E-04	7.85E-04	7.99E-05	8.06E-05	1.87E-05	1.87E-05	5.89E-04
THYMUS	G	3.18E-04	2.33E-05	2.63E-04	7.48E-05	8.05E-05	3.64E-05	9.10E-05	4.18E-04	1.72E-03	1.72E-03	7.56E-04
	B	0.0	0.0	0.0	0.0	0.0	0.0	0.0	0.0	0.0	0.0	0.0
	T	3.18E-04	2.33E-05	2.63E-04	7.48E-05	8.05E-05	3.64E-05	9.10E-05	4.18E-04	1.72E-03	1.72E-03	7.56E-04
THYROID	G	1.02E-04	9.53E-06	8.06E-05	2.76E-05	2.91E-05	1.48E-05	5.49E-05	9.36E-05	5.06E-04	5.06E-04	5.83E-04
	B	0.0	0.0	0.0	0.0	0.0	0.0	0.0	0.0	0.0	0.0	0.0
	T	1.02E-04	9.53E-06	8.06E-05	2.76E-05	2.91E-05	1.48E-05	5.49E-05	9.36E-05	5.06E-04	5.06E-04	5.83E-04
UTERUS	G	1.74E-04	6.04E-03	4.16E-04	3.45E-03	2.04E-03	2.32E-03	3.65E-04	2.21E-04	7.34E-05	7.34E-05	1.01E-03
	B	0.0	0.0	0.0	0.0	0.0	0.0	0.0	0.0	0.0	0.0	0.0
	T	1.74E-04	6.04E-03	4.16E-04	3.45E-03	2.04E-03	2.32E-03	3.65E-04	2.21E-04	7.34E-05	7.34E-05	1.01E-03
T BODY	G	7.14E-04	7.88E-04	7.51E-04	8.20E-04	8.07E-04	8.02E-04	7.20E-04	7.19E-04	6.10E-04	6.10E-04	6.19E-04
	B	3.68E-04	4.14E-05	1.10E-04	2.94E-04	1.76E-04	2.18E-04	3.68E-04	3.68E-04	3.68E-04	3.68E-04	3.68E-04
	T	1.08E-03	8.30E-04	8.61E-04	1.11E-03	9.83E-04	1.02E-03	1.09E-03	1.09E-03	9.78E-04	9.78E-04	9.87E-04

CONTINUED NEXT PAGE

31-GALLIUM-72 CONTINUED

TARGET ORGANS		SOURCE ORGANS										
		OVARIES	PANCREAS	COR BONE	CAN BONE	R MARROW	Y MARROW	SKIN	SPLEEN	TESTES	THYROID	T BODY
ADRENALS	G	2.48E-04	2.93E-03	6.97E-04	6.97E-04	9.30E-04	4.00E-04	3.75E-04	2.78E-03	4.35E-05	1.01E-04	8.52E-04
	B	0.0	0.0	0.0	0.0	0.0	0.0	0.0	0.0	0.0	0.0	3.68E-04
	T	2.48E-04	2.93E-03	6.97E-04	6.97E-04	9.30E-04	4.00E-04	3.75E-04	2.78E-03	4.35E-05	1.01E-04	1.22E-03
BLAD WALL	G	2.76E-03	1.36E-04	2.57E-04	2.57E-04	3.94E-04	1.67E-04	3.26E-04	1.33E-04	2.09E-03	9.56E-06	7.95E-04
	B	0.0	0.0	0.0	0.0	0.0	0.0	0.0	0.0	0.0	0.0	3.68E-04
	T	2.76E-03	1.36E-04	2.57E-04	2.57E-04	3.94E-04	1.67E-04	3.26E-04	1.33E-04	2.09E-03	9.56E-06	1.16E-03
GI TRACT S WALL	G	4.03E-04	6.96E-03	2.47E-04	2.47E-04	4.53E-04	3.38E-04	2.86E-04	3.96E-03	5.53E-05	6.13E-05	7.00E-04
	B	0.0	0.0	0.0	0.0	0.0	0.0	0.0	0.0	0.0	0.0	3.68E-04
	T	4.03E-04	6.96E-03	2.47E-04	2.47E-04	4.53E-04	3.38E-04	2.86E-04	3.96E-03	5.53E-05	6.13E-05	1.07E-03
SI+CONT	G	4.71E-03	7.73E-04	3.51E-04	3.51E-04	1.09E-03	4.47E-04	2.60E-04	6.05E-04	2.51E-04	2.06E-05	8.20E-04
	B	0.0	0.0	0.0	0.0	0.0	0.0	0.0	0.0	0.0	0.0	3.68E-04
	T	4.71E-03	7.73E-04	3.51E-04	3.51E-04	1.09E-03	4.47E-04	2.60E-04	6.05E-04	2.51E-04	2.06E-05	1.19E-03
ULI WALL	G	4.43E-03	9.09E-04	3.31E-04	3.31E-04	8.53E-04	3.91E-04	2.72E-04	6.30E-04	2.34E-04	2.35E-05	7.81E-04
	B	0.0	0.0	0.0	0.0	0.0	0.0	0.0	0.0	0.0	0.0	3.68E-04
	T	4.43E-03	9.09E-04	3.31E-04	3.31E-04	8.53E-04	3.91E-04	2.72E-04	6.30E-04	2.34E-04	2.35E-05	1.15E-03
LLI WALL	G	5.72E-03	2.46E-04	4.27E-04	4.27E-04	1.34E-03	3.91E-04	2.88E-04	3.01E-04	1.08E-03	1.29E-05	9.07E-04
	B	0.0	0.0	0.0	0.0	0.0	0.0	0.0	0.0	0.0	0.0	3.68E-04
	T	5.72E-03	2.46E-04	4.27E-04	4.27E-04	1.34E-03	3.91E-04	2.88E-04	3.01E-04	1.08E-03	1.29E-05	1.27E-03
KIDNEYS	G	5.01E-04	2.51E-03	4.26E-04	4.26E-04	1.07E-03	4.91E-04	3.36E-04	3.45E-03	6.42E-05	5.36E-05	7.29E-04
	B	0.0	0.0	0.0	0.0	0.0	0.0	0.0	0.0	0.0	0.0	3.68E-04
	T	5.01E-04	2.51E-03	4.26E-04	4.26E-04	1.07E-03	4.91E-04	3.36E-04	3.45E-03	6.42E-05	5.36E-05	1.10E-03
LIVER	G	3.03E-04	1.66E-03	3.35E-04	3.35E-04	4.47E-04	4.81E-04	3.07E-04	4.73E-04	4.93E-05	1.02E-04	7.34E-04
	B	0.0	0.0	0.0	0.0	0.0	0.0	0.0	0.0	0.0	0.0	3.68E-04
	T	3.03E-04	1.66E-03	3.35E-04	3.35E-04	4.47E-04	4.81E-04	3.07E-04	4.73E-04	4.93E-05	1.02E-04	1.10E-03
LUNGS	G	7.58E-05	9.73E-04	4.35E-04	4.35E-04	5.18E-04	4.28E-04	3.15E-04	9.20E-04	1.51E-05	4.82E-04	5.98E-04
	B	0.0	0.0	0.0	0.0	0.0	0.0	0.0	0.0	0.0	0.0	3.68E-04
	T	7.58E-05	9.73E-04	4.35E-04	4.35E-04	5.18E-04	4.28E-04	3.15E-04	9.20E-04	1.51E-05	4.82E-04	9.66E-04
RESP LYM NODE	G	7.58E-05	9.73E-04	4.35E-04	4.35E-04	5.18E-04	4.28E-04	3.15E-04	9.20E-04	1.51E-05	4.82E-04	5.98E-04
	B	0.0	0.0	0.0	0.0	0.0	0.0	0.0	0.0	0.0	0.0	3.68E-04
	T	7.58E-05	9.73E-04	4.35E-04	4.35E-04	5.18E-04	4.28E-04	3.15E-04	9.20E-04	1.51E-05	4.82E-04	9.66E-04
MUSCLE*	G	8.38E-04	7.57E-04	4.85E-04	4.85E-04	5.65E-04	4.46E-04	4.09E-04	6.27E-04	5.89E-04	5.83E-04	6.19E-04
	B	0.0	0.0	0.0	0.0	0.0	0.0	0.0	0.0	0.0	0.0	3.68E-04
	T	8.38E-04	7.57E-04	4.85E-04	4.85E-04	5.65E-04	4.46E-04	4.09E-04	6.27E-04	5.89E-04	5.83E-04	9.87E-04
OVARIES	G	3.16E-01	3.40E-04	4.17E-04	4.17E-04	1.31E-03	3.97E-04	2.55E-04	1.99E-04	4.35E-47	1.52E-05	7.73E-04
	B	2.34E 00	0.0	0.0	0.0	0.0	0.0	0.0	0.0	0.0	0.0	3.68E-04
	T	2.66E 00	3.40E-04	4.17E-04	4.17E-04	1.31E-03	3.97E-04	2.55E-04	1.99E-04	4.35E-47	1.52E-05	1.14E-03

31-GALLIUM-72 CONTINUED

SOURCE ORGANS

TARGET ORGANS		OVARIES	PANCREAS	COR BONE	CAN BONE	R MARROW	Y MARROW	SKIN	SPLEEN	TESTES	THYROID	T BODY
PANCREAS	G	2.74E-04	8.68E-02	4.51E-04	4.51E-04	5.82E-04	4.43E-04	2.47E-04	7.53E-03	6.12E-05	7.37E-05	8.98E-04
	B	0.0	2.58E-01	0.0	0.0	0.0	0.0	0.0	0.0	0.0	0.0	3.68E-04
	T	2.74E-04	3.44E-01	4.51E-04	4.51E-04	5.82E-04	4.43E-04	2.47E-04	7.53E-03	6.12E-05	7.37E-05	1.27E-03
SKELETON BONE	G	3.83E-04	3.83E-04	1.43E-03	1.43E-03	9.60E-04	1.07E-03	3.71E-04	3.26E-04	2.85E-04	3.24E-04	6.20E-04
	B	0.0	0.0	5.15E-03	3.06E-03	1.39E-03	0.0	0.0	0.0	0.0	0.0	3.68E-04
	T	3.83E-04	3.83E-04	6.58E-03	4.49E-03	2.35E-03	1.07E-03	3.71E-04	3.26E-04	2.85E-04	3.24E-04	9.88E-04
R MARROW	G	1.22E-03	7.09E-04	1.28E-03	1.28E-03	3.03E-03	1.09E-03	3.45E-04	4.76E-04	2.29E-04	3.54E-04	6.82E-04
	B	0.0	0.0	2.96E-04	6.96E-03	1.25E-02	0.0	0.0	0.0	0.0	0.0	3.68E-04
	T	1.22E-03	7.09E-04	1.58E-03	8.24E-03	1.56E-02	1.09E-03	3.45E-04	4.76E-04	2.29E-04	3.54E-04	1.05E-03
Y MARROW	G	5.01E-04	4.50E-04	1.23E-03	1.23E-03	1.18E-03	1.82E-03	3.94E-04	4.82E-04	1.35E-04	1.80E-04	5.76E-04
	B	0.0	0.0	0.0	0.0	0.0	1.72E-02	0.0	0.0	0.0	0.0	3.68E-04
	T	5.01E-04	4.50E-04	1.23E-03	1.23E-03	1.18E-03	1.90E-02	3.94E-04	4.82E-04	1.35E-04	1.80E-04	9.45E-04
T E CL	G	3.83E-04	3.83E-04	1.43E-03	1.43E-03	1.29E-03	1.18E-03	3.71E-04	3.26E-04	2.85E-04	3.24E-04	6.20E-04
	B	0.0	0.0	3.23E-03	5.02E-03	5.24E-03	4.29E-03	0.0	0.0	0.0	0.0	3.68E-04
	T	3.83E-04	3.83E-04	4.65E-03	6.45E-03	6.53E-03	5.47E-03	3.71E-04	3.26E-04	2.85E-04	3.24E-04	9.88E-04
SKIN	G	2.39E-04	2.45E-04	3.84E-04	3.84E-04	3.39E-04	4.26E-04	8.86E-04	2.75E-04	6.81E-04	4.00E-04	4.10E-04
	B	0.0	0.0	0.0	0.0	0.0	0.0	9.91E-03	0.0	0.0	0.0	3.68E-04
	T	2.39E-04	2.45E-04	3.84E-04	3.84E-04	3.39E-04	4.26E-04	1.08E-02	2.75E-04	6.81E-04	4.00E-04	7.78E-04
SPLEEN	G	3.13E-04	7.58E-03	3.40E-04	3.40E-04	4.52E-04	5.11E-04	2.99E-04	5.32E-02	5.49E-05	7.72E-05	6.93E-04
	B	0.0	0.0	0.0	0.0	0.0	0.0	0.0	1.43E-01	0.0	0.0	3.68E-04
	T	3.13E-04	7.58E-03	3.40E-04	3.40E-04	4.52E-04	5.11E-04	2.99E-04	1.96E-01	5.49E-05	7.72E-05	1.06E-03
TESTES	G	4.35E-47	5.67E-05	3.93E-04	3.93E-04	2.04E-04	3.92E-04	4.19E-04	5.51E-05	1.48E-01	4.61E-06	7.28E-04
	B	0.0	0.0	0.0	0.0	0.0	0.0	0.0	0.0	7.36E-01	0.0	3.68E-04
	T	4.35E-47	5.67E-05	3.93E-04	3.93E-04	2.04E-04	3.92E-04	4.19E-04	5.51E-05	8.84E-01	4.61E-06	1.10E-03
THYMUS	G	3.86E-05	2.66E-04	3.38E-04	3.38E-04	3.56E-04	2.67E-04	3.58E-04	2.76E-04	1.06E-05	1.88E-03	6.79E-04
	B	0.0	0.0	0.0	0.0	0.0	0.0	0.0	0.0	0.0	0.0	3.68E-04
	T	3.86E-05	2.66E-04	3.38E-04	3.38E-04	3.56E-04	2.67E-04	3.58E-04	2.76E-04	1.06E-05	1.88E-03	1.05E-03
THYROID	G	1.52E-05	7.12E-05	2.25E-04	2.25E-04	3.95E-04	3.15E-04	3.64E-04	7.87E-05	4.60E-06	1.99E-01	6.44E-04
	B	0.0	0.0	0.0	0.0	0.0	0.0	0.0	0.0	0.0	1.29E 00	3.68E-04
	T	1.52E-05	7.12E-05	2.25E-04	2.25E-04	3.95E-04	3.15E-04	3.64E-04	7.87E-05	4.60E-06	1.49E 00	1.01E-03
UTERUS	G	7.11E-03	2.78E-04	2.98E-04	2.98E-04	6.45E-04	3.52E-04	2.90E-04	2.48E-04	4.35E-47	1.46E-05	9.11E-04
	B	0.0	0.0	0.0	0.0	0.0	0.0	0.0	0.0	0.0	0.0	3.68E-04
	T	7.11E-03	2.78E-04	2.98E-04	2.98E-04	6.45E-04	3.52E-04	2.90E-04	2.48E-04	4.35E-47	1.46E-05	1.28E-03
T BODY	G	8.37E-04	8.20E-04	6.14E-04	6.14E-04	6.79E-04	5.49E-04	4.09E-04	7.14E-04	6.18E-04	5.58E-04	6.16E-04
	B	3.68E-04	3.68E-04	3.68E-04	3.68E-04	3.68E-04	3.68E-04	3.68E-04	3.68E-04	3.68E-04	3.68E-04	3.68E-04
	T	1.21E-03	1.19E-03	9.82E-04	9.82E-04	1.05E-03	9.17E-04	7.77E-04	1.08E-03	9.86E-04	9.26E-04	9.84E-04

*"MUSCLE" VALUES MAY BE USED FOR "SEPARABLE FAT" WITH ADJUSTMENT (SEE TEXT)
PRINCIPLE REFERENCE- RESTER, A.C. ET AL, NUCL. PHYS. A162, 461 (1970).
DATE DECAY DATA REVIEWED-AUGUST 1973

S, AVERAGE DOSE EQUIVALENT PER UNIT ACCUMULATED ACTIVITY (REM/UCI-DAY), FOR 32-GERMANIUM-71 (TR=1.140E 01 DAYS)

DATE OF TABLE 11-27-74

TARGET ORGANS		SOURCE ORGANS										
		ADRENALS	BLAD CON	S CONT	SI+CONT	ULI CONT	LLI CONT	KIDNEYS	LIVER	LUNG	RESP LYM NODE	MUSCLE*
ADRENALS	G	1.06E-02	4.34E-26	8.11E-12	4.04E-15	1.08E-15	3.68E-18	9.26E-07	4.60E-07	2.32E-07	2.32E-07	7.58E-07
	B	1.98E-02	0.0	0.0	0.0	0.0	0.0	0.0	0.0	0.0	0.0	0.0
	T	3.04E-02	4.34E-26	8.11E-12	4.04E-15	1.08E-15	3.68E-18	9.26E-07	4.60E-07	2.32E-07	2.32E-07	7.58E-07
BLAD WALL	G	1.05E-25	1.60E-04	3.02E-19	7.91E-11	6.22E-11	2.60E-08	8.60E-20	1.08E-19	5.73E-29	5.73E-29	3.99E-08
	B	0.0	6.93E-04	0.0	0.0	0.0	0.0	0.0	0.0	0.0	0.0	0.0
	T	1.05E-25	8.53E-04	3.02E-19	7.91E-11	6.22E-11	2.60E-08	8.60E-20	1.08E-19	5.73E-29	5.73E-29	3.99E-08
GI TRACT S WALL	G	2.63E-11	5.32E-19	6.05E-05	1.08E-07	3.95E-07	2.35E-09	2.54E-10	7.23E-08	1.01E-07	1.01E-07	8.92E-09
	B	0.0	0.0	5.55E-04	0.0	0.0	0.0	0.0	0.0	0.0	0.0	0.0
	T	2.63E-11	5.32E-19	6.15E-04	1.08E-07	3.95E-07	2.35E-09	2.54E-10	7.23E-08	1.01E-07	1.01E-07	8.92E-09
SI+CONT	G	4.04E-15	2.85E-11	3.74E-08	1.38E-04	1.08E-06	4.87E-07	1.22E-09	3.04E-08	3.09E-18	3.09E-18	1.32E-07
	B	0.0	0.0	0.0	3.47E-04	0.0	0.0	0.0	0.0	0.0	0.0	0.0
	T	4.04E-15	2.85E-11	3.74E-08	4.85E-04	1.08E-06	4.87E-07	1.22E-09	3.04E-08	3.09E-18	3.09E-18	1.32E-07
ULI WALL	G	2.16E-15	3.21E-11	1.52E-07	8.42E-05	6.85E-05	1.94E-06	1.40E-10	3.55E-08	4.75E-18	4.75E-18	8.19E-07
	B	0.0	0.0	0.0	0.0	6.30E-04	0.0	0.0	0.0	0.0	0.0	0.0
	T	2.16E-15	3.21E-11	1.52E-07	8.42E-05	6.99E-04	1.94E-06	1.40E-10	3.55E-08	4.75E-18	4.75E-18	8.19E-07
LLI WALL	G	3.78E-18	6.41E-08	3.21E-10	5.29E-06	4.63E-07	1.04E-04	1.55E-12	5.13E-18	1.17E-20	1.17E-20	1.44E-08
	B	0.0	0.0	0.0	0.0	0.0	1.03E-03	0.0	0.0	0.0	0.0	0.0
	T	3.78E-18	6.41E-08	3.21E-10	5.29E-06	4.63E-07	1.13E-03	1.55E-12	5.13E-18	1.17E-20	1.17E-20	1.44E-08
KIDNEYS	G	8.34E-07	2.85E-20	7.18E-11	9.27E-10	5.97E-11	7.96E-13	6.60E-04	1.57E-07	1.21E-11	1.21E-11	2.70E-07
	B	0.0	0.0	0.0	0.0	0.0	0.0	8.95E-04	0.0	0.0	0.0	0.0
	T	8.34E-07	2.85E-20	7.18E-11	9.27E-10	5.97E-11	7.96E-13	1.55E-03	1.57E-07	1.21E-11	1.21E-11	2.70E-07
LIVER	G	5.61E-08	4.89E-20	4.02E-08	1.46E-08	2.97E-08	5.48E-18	8.32E-08	1.08E-04	1.63E-08	1.63E-08	1.17E-07
	B	0.0	0.0	0.0	0.0	0.0	0.0	0.0	1.54E-04	0.0	0.0	0.0
	T	5.61E-08	4.89E-20	4.02E-08	1.46E-08	2.97E-08	5.48E-18	8.32E-08	2.62E-04	1.63E-08	1.63E-08	1.17E-07
LUNGS	G	5.99E-08	6.91E-30	3.31E-08	8.34E-19	7.44E-19	4.85E-18	6.70E-09	1.86E-08	1.66E-04	1.66E-04	7.31E-07
	B	0.0	0.0	0.0	0.0	0.0	0.0	0.0	0.0	2.77E-04	2.77E-04	0.0
	T	5.99E-08	6.91E-30	3.31E-08	8.34E-19	7.44E-19	4.85E-18	6.70E-09	1.86E-08	4.43E-04	4.43E-04	7.31E-07
RESP LYM NODE	G	5.99E-08	6.91E-30	3.31E-08	8.34E-19	7.44E-19	4.85E-18	6.70E-09	1.86E-08	1.53E-04	1.66E-04	7.31E-07
	B	0.0	0.0	0.0	0.0	0.0	0.0	0.0	0.0	0.0	1.85E-02	0.0
	T	5.99E-08	6.91E-30	3.31E-08	8.34E-19	7.44E-19	4.85E-18	6.70E-09	1.86E-08	1.53E-04	1.87E-02	7.31E-07
MUSCLE*	G	7.58E-07	3.99E-08	8.92E-09	1.32E-07	1.49E-08	1.44E-08	2.70E-07	1.17E-07	7.31E-07	7.31E-07	3.66E-06
	B	0.0	0.0	0.0	0.0	0.0	0.0	0.0	0.0	0.0	0.0	9.90E-06
	T	7.58E-07	3.99E-08	8.92E-09	1.32E-07	1.49E-08	1.44E-08	2.70E-07	1.17E-07	7.31E-07	7.31E-07	1.36E-05
OVARIES	G	3.72E-21	1.17E-09	3.73E-15	2.59E-06	3.77E-06	7.70E-06	6.91E-15	1.84E-15	8.52E-25	8.52E-25	7.76E-07
	B	0.0	0.0	0.0	0.0	0.0	0.0	0.0	0.0	0.0	0.0	0.0
	T	3.72E-21	1.17E-09	3.73E-15	2.59E-06	3.77E-06	7.70E-06	6.91E-15	1.84E-15	8.52E-25	8.52E-25	7.76E-07

32-GERMANIUM-71 CONTINUED

TARGET ORGANS		SOURCE ORGANS										
		ADRENALS	BLAD CON	S CONT	SI+CONT	ULI CONT	LLI CONT	KIDNEYS	LIVER	LUNG	RESP LYM NODE	MUSCLE*
PANCREAS	G	5.68E-09	5.89E-23	1.56E-06	4.96E-12	4.23E-12	3.21E-15	4.39E-09	2.76E-07	1.60E-09	1.60E-09	4.56E-07
	B	0.0	0.0	0.0	0.0	0.0	0.0	0.0	0.0	0.0	0.0	0.0
	T	5.68E-09	5.89E-23	1.56E-06	4.96E-12	4.23E-12	3.21E-15	4.39E-09	2.76E-07	1.60E-09	1.60E-09	4.56E-07
SKELETON BONE	G	8.27E-08	4.80E-12	7.24E-09	4.08E-08	3.08E-08	9.77E-09	4.20E-08	1.15E-08	5.98E-09	5.98E-09	7.28E-08
	B	0.0	0.0	0.0	0.0	0.0	0.0	0.0	0.0	0.0	0.0	0.0
	T	8.27E-08	4.80E-12	7.24E-09	4.08E-08	3.08E-08	9.77E-09	4.20E-08	1.15E-08	5.98E-09	5.98E-09	7.28E-08
R MARROW	G	1.24E-07	5.32E-09	7.50E-09	1.72E-07	1.30E-07	4.11E-08	1.12E-07	1.19E-08	6.21E-09	6.21E-09	3.80E-07
	B	0.0	0.0	0.0	0.0	0.0	0.0	0.0	0.0	0.0	0.0	0.0
	T	1.24E-07	5.32E-09	7.50E-09	1.72E-07	1.30E-07	4.11E-08	1.12E-07	1.19E-08	6.21E-09	6.21E-09	3.80E-07
Y MARROW	G	7.53E-08	1.77E-09	9.86E-09	5.72E-08	4.32E-08	1.37E-08	5.08E-08	1.57E-08	8.11E-09	8.11E-09	3.18E-07
	B	0.0	0.0	0.0	0.0	0.0	0.0	0.0	0.0	0.0	0.0	0.0
	T	7.53E-08	1.77E-09	9.86E-09	5.72E-08	4.32E-08	1.37E-08	5.08E-08	1.57E-08	8.11E-09	8.11E-09	3.18E-07
T E CL	G	8.27E-08	4.80E-12	7.24E-09	4.08E-08	3.08E-08	9.77E-09	4.20E-08	1.15E-08	5.98E-09	5.98E-09	7.28E-08
	B	0.0	0.0	0.0	0.0	0.0	0.0	0.0	0.0	0.0	0.0	0.0
	T	8.27E-08	4.80E-12	7.24E-09	4.08E-08	3.08E-08	9.77E-09	4.20E-08	1.15E-08	5.98E-09	5.98E-09	7.28E-08
SKIN	G	1.22E-08	4.99E-09	2.59E-09	9.96E-09	1.59E-10	1.54E-08	3.12E-08	1.08E-08	8.82E-09	8.82E-09	7.51E-07
	B	0.0	0.0	0.0	0.0	0.0	0.0	0.0	0.0	0.0	0.0	0.0
	T	1.22E-08	4.99E-09	2.59E-09	9.96E-09	1.59E-10	1.54E-08	3.12E-08	1.08E-08	8.82E-09	8.82E-09	7.51E-07
SPLEEN	G	7.83E-08	4.26E-23	2.11E-08	3.98E-11	1.08E-11	2.86E-13	1.16E-06	1.36E-13	1.24E-07	1.24E-07	2.23E-07
	B	0.0	0.0	0.0	0.0	0.0	0.0	0.0	0.0	0.0	0.0	0.0
	T	7.83E-08	4.26E-23	2.11E-08	3.98E-11	1.08E-11	2.86E-13	1.16E-06	1.36E-13	1.24E-07	1.24E-07	2.23E-07
TESTES	G	1.15E-33	3.36E-10	5.55E-27	5.17E-19	2.32E-18	8.76E-11	7.12E-28	3.53E-27	1.38E-36	1.38E-36	1.02E-08
	B	0.0	0.0	0.0	0.0	0.0	0.0	0.0	0.0	0.0	0.0	0.0
	T	1.15E-33	3.36E-10	5.55E-27	5.17E-19	2.32E-18	8.76E-11	7.12E-28	3.53E-27	1.38E-36	1.38E-36	1.02E-08
THYMUS	G	1.83E-19	9.59E-38	4.12E-19	1.70E-27	2.18E-27	1.65E-30	1.15E-22	1.18E-16	4.16E-08	4.16E-08	3.27E-06
	B	0.0	0.0	0.0	0.0	0.0	0.0	0.0	0.0	0.0	0.0	0.0
	T	1.83E-19	9.59E-38	4.12E-19	1.70E-27	2.18E-27	1.65E-30	1.15E-22	1.18E-16	4.16E-08	4.16E-08	3.27E-06
THYROID	G	3.44E-27	1.01E-25	9.20E-27	7.03E-36	8.54E-36	1.71E-38	1.32E-30	2.10E-25	7.60E-13	7.60E-13	6.33E-07
	B	0.0	0.0	0.0	0.0	0.0	0.0	0.0	0.0	0.0	0.0	0.0
	T	3.44E-27	1.01E-25	9.20E-27	7.03E-36	8.54E-36	1.71E-38	1.32E-30	2.10E-25	7.60E-13	7.60E-13	6.33E-07
UTERUS	G	3.17E-22	7.29E-07	1.41E-16	2.56E-07	8.03E-10	9.62E-10	2.74E-16	3.28E-17	6.18E-26	6.18E-26	3.77E-06
	B	0.0	0.0	0.0	0.0	0.0	0.0	0.0	0.0	0.0	0.0	0.0
	T	3.17E-22	7.29E-07	1.41E-16	2.56E-07	8.03E-10	9.62E-10	2.74E-16	3.28E-17	6.18E-26	6.18E-26	3.77E-06
T BODY	G	2.87E-06	2.87E-06	2.87E-06	2.87E-06	2.87E-06	2.87E-06	2.87E-06	2.87E-06	2.87E-06	2.87E-06	2.87E-06
	B	3.96E-06	4.46E-07	1.19E-06	3.17E-06	1.89E-06	2.35E-06	3.96E-06	3.96E-06	3.96E-06	3.96E-06	3.96E-06
	T	6.83E-06	3.31E-06	4.05E-06	6.03E-06	4.76E-06	5.21E-06	6.83E-06	6.83E-06	6.83E-06	6.83E-06	6.83E-06

CONTINUED NEXT PAGE

32-GERMANIUM-71 CONTINUED

TARGET ORGANS		SOURCE ORGANS										
		OVARIES	PANCREAS	COR BONE	CAN BONE	R MARROW	Y MARROW	SKIN	SPLEEN	TESTES	THYROID	T BODY
ADRENALS	G	3.72E-21	5.68E-09	7.60E-08	7.60E-08	1.11E-07	2.96E-08	1.97E-08	2.08E-08	1.15E-33	3.44E-28	3.27E-06
	B	0.0	0.0	0.0	0.0	0.0	0.0	0.0	0.0	0.0	0.0	3.96E-06
	T	3.72E-21	5.68E-09	7.60E-08	7.60E-08	1.11E-07	2.96E-08	1.97E-08	2.08E-08	1.15E-33	3.44E-28	7.23E-06
BLAD WALL	G	3.36E-09	1.51E-22	4.25E-12	4.25E-12	1.74E-11	3.41E-12	4.01E-08	1.09E-22	9.38E-10	1.42E-25	2.37E-06
	B	0.0	0.0	0.0	0.0	0.0	0.0	0.0	0.0	0.0	0.0	3.96E-06
	T	3.36E-09	1.51E-22	4.25E-12	4.25E-12	1.74E-11	3.41E-12	4.01E-08	1.09E-22	9.38E-10	1.42E-25	6.33E-06
GI TRACT S WALL	G	1.52E-14	4.72E-07	2.72E-08	2.72E-08	2.78E-08	5.18E-08	5.14E-08	1.62E-07	2.25E-26	3.36E-26	2.77E-06
	B	0.0	0.0	0.0	0.0	0.0	0.0	0.0	0.0	0.0	0.0	3.96E-06
	T	1.52E-14	4.72E-07	2.72E-08	2.72E-08	2.78E-08	5.18E-08	5.14E-08	1.62E-07	2.25E-26	3.36E-26	6.73E-06
SI+CONT	G	5.62E-07	4.87E-12	2.86E-08	2.86E-08	6.10E-08	3.09E-08	1.21E-08	3.32E-11	5.02E-19	7.43E-36	2.89E-06
	B	0.0	0.0	0.0	0.0	0.0	0.0	0.0	0.0	0.0	0.0	3.96E-06
	T	5.62E-07	4.87E-12	2.86E-08	2.86E-08	6.10E-08	3.09E-08	1.21E-08	3.32E-11	5.02E-19	7.43E-36	6.85E-06
ULI WALL	G	1.75E-06	7.29E-12	3.97E-08	3.97E-08	1.27E-07	3.90E-08	2.36E-08	2.21E-11	2.53E-18	1.51E-35	2.94E-06
	B	0.0	0.0	0.0	0.0	0.0	0.0	0.0	0.0	0.0	0.0	3.96E-06
	T	1.75E-06	7.29E-12	3.97E-08	3.97E-08	1.27E-07	3.90E-08	2.36E-08	2.21E-11	2.53E-18	1.51E-35	6.90E-06
LLI WALL	G	1.95E-06	2.65E-15	1.22E-07	1.22E-07	2.86E-07	8.59E-08	1.07E-08	3.41E-13	2.44E-10	1.35E-38	2.91E-06
	B	0.0	0.0	0.0	0.0	0.0	0.0	0.0	0.0	0.0	0.0	3.96E-06
	T	1.95E-06	2.65E-15	1.22E-07	1.22E-07	2.86E-07	8.59E-08	1.07E-08	3.41E-13	2.44E-10	1.35E-38	6.87E-06
KIDNEYS	G	6.96E-15	4.24E-09	5.68E-08	5.68E-08	4.64E-08	8.79E-08	3.41E-08	1.32E-06	7.58E-28	1.44E-30	2.81E-06
	B	0.0	0.0	0.0	0.0	0.0	0.0	0.0	0.0	0.0	0.0	3.96E-06
	T	6.96E-15	4.24E-09	5.68E-08	5.68E-08	4.64E-08	8.79E-08	3.41E-08	1.32E-06	7.58E-28	1.44E-30	6.77E-06
LIVER	G	1.98E-15	2.88E-08	2.34E-08	2.34E-08	1.62E-08	3.24E-08	8.95E-09	1.35E-13	4.18E-27	2.05E-25	2.89E-06
	B	0.0	0.0	0.0	0.0	0.0	0.0	0.0	0.0	0.0	0.0	3.96E-06
	T	1.98E-15	2.88E-08	2.34E-08	2.34E-08	1.62E-08	3.24E-08	8.95E-09	1.35E-13	4.18E-27	2.05E-25	6.85E-06
LUNGS	G	8.30E-27	5.16E-10	3.17E-08	3.17E-08	2.95E-08	2.58E-08	1.51E-08	1.22E-07	3.64E-37	3.13E-14	2.65E-06
	B	0.0	0.0	0.0	0.0	0.0	0.0	0.0	0.0	0.0	0.0	3.96E-06
	T	8.30E-27	5.16E-10	3.17E-08	3.17E-08	2.95E-08	2.58E-08	1.51E-08	1.22E-07	3.64E-37	3.13E-14	6.61E-06
RESP LYM NODE	G	8.30E-27	5.16E-10	3.17E-08	3.17E-08	2.95E-08	2.58E-08	1.51E-08	1.22E-07	3.64E-37	3.13E-14	2.65E-06
	B	0.0	0.0	0.0	0.0	0.0	0.0	0.0	0.0	0.0	0.0	3.96E-06
	T	8.30E-27	5.16E-10	3.17E-08	3.17E-08	2.95E-08	2.58E-08	1.51E-08	1.22E-07	3.64E-37	3.13E-14	6.61E-06
MUSCLE*	G	7.76E-07	4.56E-07	7.28E-08	7.28E-08	9.92E-08	2.07E-07	7.51E-07	2.23E-07	1.02E-08	6.33E-07	2.87E-06
	B	0.0	0.0	0.0	0.0	0.0	0.0	0.0	0.0	0.0	0.0	3.96E-06
	T	7.76E-07	4.56E-07	7.28E-08	7.28E-08	9.92E-08	2.07E-07	7.51E-07	2.23E-07	1.02E-08	6.33E-07	6.83E-06
OVARIES	G	1.97E-02	9.90E-19	3.98E-09	3.98E-09	1.61E-08	4.37E-09	1.61E-12	1.84E-17	6.03E-45	3.78E-24	3.31E-06
	B	2.52E-02	0.0	0.0	0.0	0.0	0.0	0.0	0.0	0.0	0.0	3.96E-06
	T	4.49E-02	9.90E-19	3.98E-09	3.98E-09	1.61E-08	4.37E-09	1.61E-12	1.84E-17	6.03E-45	3.78E-24	7.27E-06

32-GERMANIUM-71 CONTINUED

TARGET ORGANS		SOURCE ORGANS										
		OVARIES	PANCREAS	COR BONE	CAN BONE	R MARROW	Y MARROW	SKIN	SPLEEN	TESTES	THYROID	T BODY
PANCREAS	G	8.89E-19	2.97E-03	7.34E-08	7.34E-08	8.67E-09	2.10E-08	2.66E-09	3.47E-07	1.56E-30	2.01E-27	2.97E-06
	B	0.0	2.77E-03	0.0	0.0	0.0	0.0	0.0	0.0	0.0	0.0	3.96E-06
	T	8.89E-19	5.74E-03	7.34E-08	7.34E-08	8.67E-09	2.10E-08	2.66E-09	3.47E-07	1.56E-30	2.01E-27	6.93E-06
SKELETON BONE	G	5.07E-09	7.08E-09	1.87E-05	1.87E-05	1.13E-05	1.47E-05	3.49E-07	1.65E-09	1.37E-11	3.36E-10	4.92E-07
	B	0.0	0.0	5.55E-05	5.48E-05	4.12E-07	0.0	0.0	0.0	0.0	0.0	3.96E-06
	T	5.07E-09	7.08E-09	7.42E-05	7.36E-05	1.18E-05	1.47E-05	3.49E-07	1.65E-09	1.37E-11	3.36E-10	4.45E-06
R MARROW	G	2.14E-08	1.47E-08	1.76E-05	1.76E-05	5.60E-05	1.57E-05	3.05E-07	1.71E-09	6.09E-10	5.03E-10	3.12E-06
	B	0.0	0.0	1.61E-08	2.06E-06	1.83E-04	0.0	0.0	0.0	0.0	0.0	3.96E-06
	T	2.14E-08	1.47E-08	1.76E-05	1.97E-05	2.40E-04	1.57E-05	3.05E-07	1.71E-09	6.09E-10	5.03E-10	7.08E-06
Y MARROW	G	7.12E-09	6.01E-09	1.75E-05	1.75E-05	1.74E-05	3.78E-05	4.12E-07	2.25E-09	2.09E-10	2.10E-10	3.05E-06
	B	0.0	0.0	0.0	0.0	0.0	1.85E-04	0.0	0.0	0.0	0.0	3.96E-06
	T	7.12E-09	6.01E-09	1.75E-05	1.75E-05	1.74E-05	2.23E-04	4.12E-07	2.25E-09	2.09E-10	2.10E-10	7.01E-06
T E CL	G	5.07E-09	7.08E-09	1.75E-05	1.75E-05	2.18E-05	2.13E-05	3.49E-07	1.65E-09	1.37E-11	3.36E-10	3.02E-06
	B	0.0	0.0	3.42E-06	7.16E-06	8.77E-05	4.62E-05	0.0	0.0	0.0	0.0	3.96E-06
	T	5.07E-09	7.08E-09	2.09E-05	2.46E-05	1.09E-04	6.75E-05	3.49E-07	1.65E-09	1.37E-11	3.36E-10	6.98E-06
SKIN	G	1.61E-12	1.38E-09	9.36E-08	9.36E-08	9.32E-08	1.41E-07	4.29E-05	1.46E-09	2.86E-07	9.50E-08	2.31E-06
	B	0.0	0.0	0.0	0.0	0.0	0.0	1.07E-04	0.0	0.0	0.0	3.96E-06
	T	1.61E-12	1.38E-09	9.36E-08	9.36E-08	9.32E-08	1.41E-07	1.50E-04	1.46E-09	2.86E-07	9.50E-08	6.27E-06
SPLEEN	G	1.91E-17	3.28E-07	1.22E-07	1.22E-07	2.93E-08	3.71E-08	3.13E-08	1.09E-03	2.13E-30	1.11E-27	3.37E-06
	B	0.0	0.0	0.0	0.0	0.0	0.0	0.0	1.54E-03	0.0	0.0	3.96E-06
	T	1.91E-17	3.28E-07	1.22E-07	1.22E-07	2.93E-08	3.71E-08	3.13E-08	2.63E-03	2.13E-30	1.11E-27	7.33E-06
TESTES	G	6.03E-45	1.57E-30	3.39E-12	3.39E-12	4.70E-10	4.96E-12	1.61E-07	1.98E-30	4.89E-03	4.02E-29	3.09E-06
	B	0.0	0.0	0.0	0.0	0.0	0.0	0.0	0.0	7.92E-03	0.0	3.96E-06
	T	6.03E-45	1.57E-30	3.39E-12	3.39E-12	4.70E-10	4.96E-12	1.61E-07	1.98E-30	1.28E-02	4.02E-29	7.05E-06
THYMUS	G	4.88E-34	3.73E-19	5.34E-08	5.34E-08	4.72E-09	6.16E-09	3.52E-09	1.03E-20	3.57E-25	2.30E-10	2.75E-06
	B	0.0	0.0	0.0	0.0	0.0	0.0	0.0	0.0	0.0	0.0	3.96E-06
	T	4.88E-34	3.73E-19	5.34E-08	5.34E-08	4.72E-09	6.16E-09	3.52E-09	1.03E-20	3.57E-25	2.30E-10	6.71E-06
THYROID	G	3.74E-24	1.96E-27	2.48E-08	2.48E-08	2.00E-08	1.99E-08	2.35E-07	1.02E-27	4.05E-29	8.69E-03	3.87E-06
	B	0.0	0.0	0.0	0.0	0.0	0.0	0.0	0.0	0.0	1.39E-02	3.96E-06
	T	3.74E-24	1.96E-27	2.48E-08	2.48E-08	2.00E-08	1.99E-08	2.35E-07	1.02E-27	4.05E-29	2.26E-02	7.83E-06
UTERUS	G	3.42E-07	3.10E-19	1.74E-11	1.74E-11	1.20E-10	3.07E-11	9.70E-09	1.41E-19	6.03E-45	9.70E-25	3.14E-06
	B	0.0	0.0	0.0	0.0	0.0	0.0	0.0	0.0	0.0	0.0	3.96E-06
	T	3.42E-07	3.10E-19	1.74E-11	1.74E-11	1.20E-10	3.07E-11	9.70E-09	1.41E-19	6.03E-45	9.70E-25	7.10E-06
T BODY	G	2.87E-06	2.87E-06	2.86E-06	2.86E-06	2.86E-06	2.86E-06	2.30E-06	2.87E-06	2.86E-06	2.87E-06	2.84E-06
	B	3.96E-06	3.96E-06	3.96E-06	3.96E-06	3.96E-06	3.96E-06	3.96E-06	3.96E-06	3.96E-06	3.96E-06	3.96E-06
	T	6.83E-06	6.83E-06	6.83E-06	6.83E-06	6.83E-06	6.83E-06	6.26E-06	6.83E-06	6.82E-06	6.83E-06	6.80E-06

*"MUSCLE" VALUES MAY BE USED FOR "SEPARABLE FAT" WITH ADJUSTMENT (SEE TEXT)
PRINCIPLE REFERENCE-LEDERER, C. M. ET AL., TABLE OF ISOTOPES, 6TH ED.
DATE DECAY DATA REVIEWED-JULY 1969

S, AVERAGE DOSE EQUIVALENT PER UNIT ACCUMULATED ACTIVITY (REM/UCI-DAY), FOR 33-ARSENIC-73 (TR=8.030E 01 DAYS)

DATE OF TABLE 11-27-74

TARGET ORGANS		SOURCE ORGANS										
		ADRENALS	BLAD CON	S CONT	SI+CONT	ULI CONT	LLI CONT	KIDNEYS	LIVER	LUNG	RESP LYM NODE	MUSCLE*
ADRENALS	G	2.72E-02	4.06E-08	3.34E-06	7.53E-07	8.93E-07	2.04E-07	2.00E-05	7.13E-06	3.76E-06	3.76E-06	4.04E-06
	B	2.16E-01	0.0	0.0	0.0	0.0	0.0	0.0	0.0	0.0	0.0	0.0
	T	2.43E-01	4.06E-08	3.34E-06	7.53E-07	8.93E-07	2.04E-07	2.00E-05	7.13E-06	3.76E-06	3.76E-06	4.04E-06
BLAD WALL	G	4.28E-08	5.58E-04	1.60E-07	2.83E-06	2.08E-06	9.22E-06	1.01E-07	6.44E-08	1.55E-08	1.55E-08	2.65E-06
	B	0.0	7.56E-03	0.0	0.0	0.0	0.0	0.0	0.0	0.0	0.0	0.0
	T	4.28E-08	8.12E-03	1.60E-07	2.83E-06	2.08E-06	9.22E-06	1.01E-07	6.44E-08	1.55E-08	1.55E-08	2.65E-06
GI TRACT S WALL	G	3.33E-06	1.37E-07	2.56E-04	5.16E-06	6.66E-06	2.20E-06	4.38E-06	2.63E-06	2.85E-06	2.85E-06	2.01E-06
	B	0.0	0.0	6.05E-03	0.0	0.0	0.0	0.0	0.0	0.0	0.0	0.0
	T	3.33E-06	1.37E-07	6.31E-03	5.16E-06	6.66E-06	2.20E-06	4.38E-06	2.63E-06	2.85E-06	2.85E-06	2.01E-06
SI+CONT	G	6.20E-07	3.44E-06	3.45E-06	4.24E-04	3.13E-05	1.62E-05	3.40E-06	1.85E-06	1.07E-07	1.07E-07	2.42E-06
	B	0.0	0.0	0.0	3.78E-03	0.0	0.0	0.0	0.0	0.0	0.0	0.0
	T	6.20E-07	3.44E-06	3.45E-06	4.20E-03	3.13E-05	1.62E-05	3.40E-06	1.85E-06	1.07E-07	1.07E-07	2.42E-06
ULI WALL	G	7.73E-07	2.38E-06	5.58E-06	2.66E-04	2.60E-04	1.14E-05	3.23E-06	3.35E-06	1.48E-07	1.48E-07	4.34E-06
	B	0.0	0.0	0.0	0.0	6.87E-03	0.0	0.0	0.0	0.0	0.0	0.0
	T	7.73E-07	2.38E-06	5.58E-06	2.66E-04	7.13E-03	1.14E-05	3.23E-06	3.35E-06	1.48E-07	1.48E-07	4.34E-06
LLI WALL	G	1.25E-07	1.15E-05	1.32E-06	2.61E-05	5.42E-06	3.68E-04	5.16E-07	1.03E-07	2.49E-08	2.49E-08	2.31E-06
	B	0.0	0.0	0.0	0.0	0.0	1.12E-02	0.0	0.0	0.0	0.0	0.0
	T	1.25E-07	1.15E-05	1.32E-06	2.61E-05	5.42E-06	1.16E-02	5.16E-07	1.03E-07	2.49E-08	2.49E-08	2.31E-06
KIDNEYS	G	1.86E-05	1.24E-07	4.53E-06	3.56E-06	3.45E-06	7.28E-07	1.78E-03	5.78E-06	8.28E-07	8.28E-07	2.61E-06
	B	0.0	0.0	0.0	0.0	0.0	0.0	9.76E-03	0.0	0.0	0.0	0.0
	T	1.86E-05	1.24E-07	4.53E-06	3.56E-06	3.45E-06	7.28E-07	1.15E-02	5.78E-06	8.28E-07	8.28E-07	2.61E-06
LIVER	G	7.15E-06	8.09E-08	2.40E-06	2.16E-06	3.32E-06	1.36E-07	5.56E-06	3.16E-04	3.58E-06	3.58E-06	1.76E-06
	B	0.0	0.0	0.0	0.0	0.0	0.0	0.0	1.68E-03	0.0	0.0	0.0
	T	7.15E-06	8.09E-08	2.40E-06	2.16E-06	3.32E-06	1.36E-07	5.56E-06	2.00E-03	3.58E-06	3.58E-06	1.76E-06
LUNGS	G	3.45E-06	5.08E-09	2.70E-06	1.34E-07	1.78E-07	3.53E-08	9.28E-07	4.00E-06	4.42E-04	4.42E-04	3.92E-06
	B	0.0	0.0	0.0	0.0	0.0	0.0	0.0	0.0	3.02E-03	3.02E-03	0.0
	T	3.45E-06	5.08E-09	2.70E-06	1.34E-07	1.78E-07	3.53E-08	9.28E-07	4.00E-06	3.47E-03	3.47E-03	3.92E-06
RESP LYM NODE	G	3.45E-06	5.08E-09	2.70E-06	1.34E-07	1.78E-07	3.53E-08	9.28E-07	4.00E-06	4.36E-04	4.42E-04	3.92E-06
	B	0.0	0.0	0.0	0.0	0.0	0.0	0.0	0.0	1.93E-03	2.02E-01	0.0
	T	3.45E-06	5.08E-09	2.70E-06	1.34E-07	1.78E-07	3.53E-08	9.28E-07	4.00E-06	2.36E-03	2.02E-01	3.92E-06
MUSCLE*	G	4.04E-06	2.65E-06	2.02E-06	2.42E-06	2.04E-06	2.31E-06	2.61E-06	1.76E-06	3.92E-06	3.92E-06	1.12E-05
	B	0.0	0.0	0.0	0.0	0.0	0.0	0.0	0.0	0.0	0.0	1.08E-04
	T	4.04E-06	2.65E-06	2.02E-06	2.42E-06	2.04E-06	2.31E-06	2.61E-06	1.76E-06	3.92E-06	3.92E-06	1.19E-04
OVARIES	G	2.13E-07	9.80E-06	6.50E-07	2.47E-05	2.56E-05	4.97E-05	1.04E-06	4.20E-07	6.51E-08	6.51E-08	4.88E-06
	B	0.0	0.0	0.0	0.0	0.0	0.0	0.0	0.0	0.0	0.0	0.0
	T	2.13E-07	9.80E-06	6.50E-07	2.47E-05	2.56E-05	4.97E-05	1.04E-06	4.20E-07	6.51E-08	6.51E-08	4.88E-06

33-ARSENIC-73 CONTINUED

SOURCE ORGANS

TARGET ORGANS		ADRENALS	BLAD CON	S CONT	SI+CONT	ULI CONT	LLI CONT	KIDNEYS	LIVER	LUNG	RESP LYM NODE	MUSCLE*
PANCREAS	G	1.30E-05	8.93E-08	3.45E-05	2.20E-06	2.26E-06	4.94E-07	8.82E-06	6.72E-06	3.49E-06	3.49E-06	3.85E-06
	B	0.0	0.0	0.0	0.0	0.0	0.0	0.0	0.0	0.0	0.0	0.0
	T	1.30E-05	8.93E-08	3.45E-05	2.20E-06	2.26E-06	4.94E-07	8.82E-06	6.72E-06	3.49E-06	3.49E-06	3.85E-06
SKELETON BONE	G	4.56E-06	1.19E-06	1.52E-06	2.36E-06	2.08E-06	3.54E-06	2.91E-06	2.14E-06	3.24E-06	3.24E-06	1.26E-06
	B	0.0	0.0	0.0	0.0	0.0	0.0	0.0	0.0	0.0	0.0	0.0
	T	4.56E-06	1.19E-06	1.52E-06	2.36E-06	2.08E-06	3.54E-06	2.91E-06	2.14E-06	3.24E-06	3.24E-06	1.26E-06
R MARROW	G	7.83E-06	3.38E-06	2.36E-06	8.75E-06	7.44E-06	1.27E-05	7.76E-06	2.58E-06	3.95E-06	3.95E-06	5.24E-06
	B	0.0	0.0	0.0	0.0	0.0	0.0	0.0	0.0	0.0	0.0	0.0
	T	7.83E-06	3.38E-06	2.36E-06	8.75E-06	7.44E-06	1.27E-05	7.76E-06	2.58E-06	3.95E-06	3.95E-06	5.24E-06
Y MARROW	G	4.23E-06	1.25E-06	2.23E-06	3.33E-06	3.04E-06	4.71E-06	3.53E-06	3.36E-06	3.50E-06	3.50E-06	4.19E-06
	B	0.0	0.0	0.0	0.0	0.0	0.0	0.0	0.0	0.0	0.0	0.0
	T	4.23E-06	1.25E-06	2.23E-06	3.33E-06	3.04E-06	4.71E-06	3.53E-06	3.36E-06	3.50E-06	3.50E-06	4.19E-06
T E CL	G	4.56E-06	1.19E-06	1.52E-06	2.36E-06	2.08E-06	3.54E-06	2.91E-06	2.14E-06	3.24E-06	3.24E-06	1.26E-06
	B	0.0	0.0	0.0	0.0	0.0	0.0	0.0	0.0	0.0	0.0	0.0
	T	4.56E-06	1.19E-06	1.52E-06	2.36E-06	2.08E-06	3.54E-06	2.91E-06	2.14E-06	3.24E-06	3.24E-06	1.26E-06
SKIN	G	6.22E-07	6.38E-07	5.40E-07	4.41E-07	4.53E-07	5.64E-07	6.97E-07	5.52E-07	6.27E-07	6.27E-07	3.00E-06
	B	0.0	0.0	0.0	0.0	0.0	0.0	0.0	0.0	0.0	0.0	0.0
	T	6.22E-07	6.38E-07	5.40E-07	4.41E-07	4.53E-07	5.64E-07	6.97E-07	5.52E-07	6.27E-07	6.27E-07	3.00E-06
SPLEEN	G	9.66E-06	1.24E-07	1.63E-05	1.43E-06	1.68E-06	8.88E-07	1.75E-05	8.25E-07	3.35E-06	3.35E-06	2.70E-06
	B	0.0	0.0	0.0	0.0	0.0	0.0	0.0	0.0	0.0	0.0	0.0
	T	9.66E-06	1.24E-07	1.63E-05	1.43E-06	1.68E-06	8.88E-07	1.75E-05	8.25E-07	3.35E-06	3.35E-06	2.70E-06
TESTES	G	4.45E-09	7.47E-06	1.72E-08	1.47E-07	1.49E-07	2.34E-06	1.88E-08	1.24E-08	1.67E-09	1.67E-09	1.54E-06
	B	0.0	0.0	0.0	0.0	0.0	0.0	0.0	0.0	0.0	0.0	0.0
	T	4.45E-09	7.47E-06	1.72E-08	1.47E-07	1.49E-07	2.34E-06	1.88E-08	1.24E-08	1.67E-09	1.67E-09	1.54E-06
THYMUS	G	3.53E-07	1.04E-09	4.28E-07	1.71E-08	2.16E-08	4.11E-09	1.06E-07	4.79E-07	5.85E-06	5.85E-06	1.22E-05
	B	0.0	0.0	0.0	0.0	0.0	0.0	0.0	0.0	0.0	0.0	0.0
	T	3.53E-07	1.04E-09	4.28E-07	1.71E-08	2.16E-08	4.11E-09	1.06E-07	4.79E-07	5.85E-06	5.85E-06	1.22E-05
THYROID	G	3.05E-08	1.17E-10	2.00E-08	1.63E-09	1.89E-09	4.61E-10	8.02E-09	3.00E-08	6.67E-07	6.67E-07	3.72E-06
	B	0.0	0.0	0.0	0.0	0.0	0.0	0.0	0.0	0.0	0.0	0.0
	T	3.05E-08	1.17E-10	2.00E-08	1.63E-09	1.89E-09	4.61E-10	8.02E-09	3.00E-08	6.67E-07	6.67E-07	3.72E-06
UTERUS	G	8.36E-08	2.95E-05	4.29E-07	1.63E-05	7.70E-06	9.96E-06	5.40E-07	2.63E-07	5.34E-08	5.34E-08	1.34E-05
	B	0.0	0.0	0.0	0.0	0.0	0.0	0.0	0.0	0.0	0.0	0.0
	T	8.36E-08	2.95E-05	4.29E-07	1.63E-05	7.70E-06	9.96E-06	5.40E-07	2.63E-07	5.34E-08	5.34E-08	1.34E-05
T BODY	G	9.86E-06	1.01E-05	9.98E-06	1.03E-05	1.02E-05	1.03E-05	9.78E-06	9.91E-06	9.71E-06	9.71E-06	9.13E-06
	B	4.32E-05	4.86E-06	1.30E-05	3.46E-05	2.06E-05	2.56E-05	4.32E-05	4.32E-05	4.32E-05	4.32E-05	4.32E-05
	T	5.31E-05	1.49E-05	2.29E-05	4.48E-05	3.08E-05	3.59E-05	5.30E-05	5.31E-05	5.29E-05	5.29E-05	5.23E-05

CONTINUED NEXT PAGE

33-ARSENIC-73 CONTINUED

TARGET ORGANS		SOURCE ORGANS										
		OVARIES	PANCREAS	COR BONE	CAN BONE	R MARROW	Y MARROW	SKIN	SPLEEN	TESTES	THYROID	T BODY
ADRENALS	G	1.88E-07	1.28E-05	1.81E-06	1.81E-06	2.36E-06	8.89E-07	6.43E-07	9.38E-06	4.45E-09	3.05E-08	9.93E-06
	B	0.0	0.0	0.0	0.0	0.0	0.0	0.0	0.0	0.0	0.0	4.32E-05
	T	1.88E-07	1.28E-05	1.81E-06	1.81E-06	2.36E-06	8.89E-07	6.43E-07	9.38E-06	4.45E-09	3.05E-08	5.31E-05
BLAD WALL	G	1.09E-05	5.34E-08	4.31E-07	4.31E-07	9.82E-07	2.64E-07	6.44E-07	6.49E-08	6.84E-06	1.20E-10	8.83E-06
	B	0.0	0.0	0.0	0.0	0.0	0.0	0.0	0.0	0.0	0.0	4.32E-05
	T	1.09E-05	5.34E-08	4.31E-07	4.31E-07	9.82E-07	2.64E-07	6.44E-07	6.49E-08	6.84E-06	1.20E-10	5.20E-05
GI TRACT S WALL	G	6.83E-07	3.22E-05	5.62E-07	5.62E-07	9.85E-07	9.57E-07	8.46E-07	1.63E-05	1.76E-08	5.56E-08	9.41E-06
	B	0.0	0.0	0.0	0.0	0.0	0.0	0.0	0.0	0.0	0.0	4.32E-05
	T	6.83E-07	3.22E-05	5.62E-07	5.62E-07	9.85E-07	9.57E-07	8.46E-07	1.63E-05	1.76E-08	5.56E-08	5.26E-05
SI+CONT	G	2.13E-05	1.78E-06	9.29E-07	9.29E-07	3.09E-06	1.19E-06	5.09E-07	1.42E-06	2.32E-07	1.28E-09	1.01E-05
	B	0.0	0.0	0.0	0.0	0.0	0.0	0.0	0.0	0.0	0.0	4.32E-05
	T	2.13E-05	1.78E-06	9.29E-07	9.29E-07	3.09E-06	1.19E-06	5.09E-07	1.42E-06	2.32E-07	1.28E-09	5.33E-05
ULI WALL	G	2.26E-05	2.29E-06	8.22E-07	8.22E-07	2.67E-06	1.02E-06	6.04E-07	1.65E-06	1.93E-07	1.92E-09	1.02E-05
	B	0.0	0.0	0.0	0.0	0.0	0.0	0.0	0.0	0.0	0.0	4.32E-05
	T	2.26E-05	2.29E-06	8.22E-07	8.22E-07	2.67E-06	1.02E-06	6.04E-07	1.65E-06	1.93E-07	1.92E-09	5.34E-05
LLI WALL	G	2.99E-05	4.89E-07	1.47E-06	1.47E-06	4.46E-06	1.24E-06	4.92E-07	5.65E-07	3.60E-06	3.62E-10	1.02E-05
	B	0.0	0.0	0.0	0.0	0.0	0.0	0.0	0.0	0.0	0.0	4.32E-05
	T	2.99E-05	4.89E-07	1.47E-06	1.47E-06	4.46E-06	1.24E-06	4.92E-07	5.65E-07	3.60E-06	3.62E-10	5.35E-05
KIDNEYS	G	7.49E-07	9.23E-06	1.05E-06	1.05E-06	2.66E-06	1.30E-06	8.84E-07	1.80E-05	1.21E-08	7.62E-09	9.41E-06
	B	0.0	0.0	0.0	0.0	0.0	0.0	0.0	0.0	0.0	0.0	4.32E-05
	T	7.49E-07	9.23E-06	1.05E-06	1.05E-06	2.66E-06	1.30E-06	8.84E-07	1.80E-05	1.21E-08	7.62E-09	5.26E-05
LIVER	G	3.84E-07	6.19E-06	7.24E-07	7.24E-07	9.15E-07	1.17E-06	6.62E-07	8.29E-07	8.90E-09	5.55E-08	9.83E-06
	B	0.0	0.0	0.0	0.0	0.0	0.0	0.0	0.0	0.0	0.0	4.32E-05
	T	3.84E-07	6.19E-06	7.24E-07	7.24E-07	9.15E-07	1.17E-06	6.62E-07	8.29E-07	8.90E-09	5.55E-08	5.30E-05
LUNGS	G	2.61E-08	3.52E-06	1.30E-06	1.30E-06	1.43E-06	1.37E-06	8.43E-07	3.67E-06	6.18E-10	1.08E-06	9.03E-06
	B	0.0	0.0	0.0	0.0	0.0	0.0	0.0	0.0	0.0	0.0	4.32E-05
	T	2.61E-08	3.52E-06	1.30E-06	1.30E-06	1.43E-06	1.37E-06	8.43E-07	3.67E-06	6.18E-10	1.08E-06	5.22E-05
RESP LYM NODE	G	2.61E-08	3.52E-06	1.30E-06	1.30E-06	1.43E-06	1.37E-06	8.43E-07	3.67E-06	6.18E-10	1.08E-06	9.03E-06
	B	0.0	0.0	0.0	0.0	0.0	0.0	0.0	0.0	0.0	0.0	4.32E-05
	T	2.61E-08	3.52E-06	1.30E-06	1.30E-06	1.43E-06	1.37E-06	8.43E-07	3.67E-06	6.18E-10	1.08E-06	5.22E-05
MUSCLE*	G	4.88E-06	3.85E-06	1.26E-06	1.26E-06	1.59E-06	1.57E-06	3.00E-06	2.70E-06	1.54E-06	3.72E-06	9.13E-06
	B	0.0	0.0	0.0	0.0	0.0	0.0	0.0	0.0	0.0	0.0	4.32E-05
	T	4.88E-06	3.85E-06	1.26E-06	1.26E-06	1.59E-06	1.57E-06	3.00E-06	2.70E-06	1.54E-06	3.72E-06	5.23E-05
OVARIES	G	5.02E-02	3.67E-07	8.90E-07	8.90E-07	4.72E-06	1.18E-06	5.05E-07	3.28E-07	1.64E-44	3.62E-10	1.09E-05
	B	2.75E-01	0.0	0.0	0.0	0.0	0.0	0.0	0.0	0.0	0.0	4.32E-05
	T	3.25E-01	3.67E-07	8.90E-07	8.90E-07	4.72E-06	1.18E-06	5.05E-07	3.28E-07	1.64E-44	3.62E-10	5.41E-05

33-ARSENIC-73 CONTINUED

TARGET ORGANS		SOURCE ORGANS										
		OVARIES	PANCREAS	COR BONE	CAN BONE	R MARROW	Y MARROW	SKIN	SPLEEN	TESTES	THYROID	T BODY
PANCREAS	G	2.59E-07	7.80E-03	1.09E-06	1.09E-06	1.84E-06	9.71E-07	4.08E-07	3.46E-05	9.54E-09	2.42E-08	1.06E-05
	B	0.0	3.02E-02	0.0	0.0	0.0	0.0	0.0	0.0	0.0	0.0	4.32E-05
	T	2.59E-07	3.80E-02	1.09E-06	1.09E-06	1.84E-06	9.71E-07	4.08E-07	3.46E-05	9.54E-09	2.42E-08	5.38E-05
SKELETON BONE	G	3.10E-06	2.62E-06	5.88E-05	5.88E-05	3.78E-05	4.83E-05	3.13E-06	2.25E-06	1.20E-06	1.72E-06	5.44E-06
	B	0.0	0.0	6.05E-04	5.71E-04	2.27E-05	0.0	0.0	0.0	0.0	0.0	4.32E-05
	T	3.10E-06	2.62E-06	6.64E-04	6.30E-04	6.05E-05	4.83E-05	3.13E-06	2.25E-06	1.20E-06	1.72E-06	4.87E-05
R MARROW	G	1.22E-05	4.88E-06	5.77E-05	5.77E-05	1.57E-04	5.09E-05	2.83E-06	2.87E-06	8.94E-07	1.76E-06	1.31E-05
	B	0.0	0.0	8.85E-07	1.13E-04	1.94E-03	0.0	0.0	0.0	0.0	0.0	4.32E-05
	T	1.22E-05	4.88E-06	5.85E-05	1.71E-04	2.10E-03	5.09E-05	2.83E-06	2.87E-06	8.94E-07	1.76E-06	5.63E-05
Y MARROW	G	4.36E-06	2.96E-06	5.70E-05	5.70E-05	5.65E-05	9.73E-05	3.58E-06	3.53E-06	3.78E-07	8.53E-07	1.21E-05
	B	0.0	0.0	0.0	0.0	0.0	2.02E-03	0.0	0.0	0.0	0.0	4.32E-05
	T	4.36E-06	2.96E-06	5.70E-05	5.70E-05	5.65E-05	2.11E-03	3.58E-06	3.53E-06	3.78E-07	8.53E-07	5.53E-05
T E CL	G	3.10E-06	2.62E-06	5.82E-05	5.82E-05	5.90E-05	5.70E-05	3.13E-06	2.25E-06	1.20E-06	1.72E-06	1.22E-05
	B	0.0	0.0	1.85E-04	3.87E-04	7.50E-04	5.04E-04	0.0	0.0	0.0	0.0	4.32E-05
	T	3.10E-06	2.62E-06	2.43E-04	4.45E-04	8.09E-04	5.61E-04	3.13E-06	2.25E-06	1.20E-06	1.72E-06	5.54E-05
SKIN	G	3.78E-07	3.92E-07	9.26E-07	9.26E-07	8.28E-07	1.18E-06	1.07E-04	5.49E-07	2.88E-06	1.26E-06	6.77E-06
	B	0.0	0.0	0.0	0.0	0.0	0.0	1.16E-03	0.0	0.0	0.0	4.32E-05
	T	3.78E-07	3.92E-07	9.26E-07	9.26E-07	8.28E-07	1.18E-06	1.27E-03	5.49E-07	2.88E-06	1.26E-06	5.00E-05
SPLEEN	G	2.99E-07	3.50E-05	1.09E-06	1.09E-06	1.02E-06	1.32E-06	7.68E-07	2.98E-03	6.58E-09	3.72E-08	1.09E-05
	B	0.0	0.0	0.0	0.0	0.0	0.0	0.0	1.68E-02	0.0	0.0	4.32E-05
	T	2.99E-07	3.50E-05	1.09E-06	1.09E-06	1.02E-06	1.32E-06	7.68E-07	1.98E-02	6.58E-09	3.72E-08	5.42E-05
TESTES	G	1.64E-44	9.57E-09	4.97E-07	4.97E-07	2.87E-07	1.10E-06	1.80E-06	8.10E-09	1.29E-02	1.93E-11	9.59E-06
	B	0.0	0.0	0.0	0.0	0.0	0.0	0.0	0.0	8.64E-02	0.0	4.32E-05
	T	1.64E-44	9.57E-09	4.97E-07	4.97E-07	2.87E-07	1.10E-06	1.80E-06	8.10E-09	9.93E-02	1.93E-11	5.28E-05
THYMUS	G	3.43E-09	4.72E-07	6.71E-07	6.71E-07	7.94E-07	7.11E-07	6.38E-07	8.27E-08	1.54E-10	6.19E-06	9.82E-06
	B	0.0	0.0	0.0	0.0	0.0	0.0	0.0	0.0	0.0	0.0	4.32E-05
	T	3.43E-09	4.72E-07	6.71E-07	6.71E-07	7.94E-07	7.11E-07	6.38E-07	8.27E-08	1.54E-10	6.19E-06	5.30E-05
THYROID	G	3.62E-10	2.78E-08	8.73E-07	8.73E-07	6.31E-07	1.38E-06	1.55E-06	1.85E-08	1.94E-11	2.25E-02	1.20E-05
	B	0.0	0.0	0.0	0.0	0.0	0.0	0.0	0.0	0.0	1.51E-01	4.32E-05
	T	3.62E-10	2.78E-08	8.73E-07	8.73E-07	6.31E-07	1.38E-06	1.55E-06	1.85E-08	1.94E-11	1.74E-01	5.52E-05
UTERUS	G	3.50E-05	2.94E-07	4.62E-07	4.62E-07	2.29E-06	7.41E-07	5.33E-07	2.08E-07	1.64E-44	3.27E-10	1.09E-05
	B	0.0	0.0	0.0	0.0	0.0	0.0	0.0	0.0	0.0	0.0	4.32E-05
	T	3.50E-05	2.94E-07	4.62E-07	4.62E-07	2.29E-06	7.41E-07	5.33E-07	2.08E-07	1.64E-44	3.27E-10	5.41E-05
T BODY	G	1.04E-05	1.03E-05	9.84E-06	9.84E-06	9.97E-06	9.57E-06	6.92E-06	9.90E-06	9.18E-06	9.22E-06	9.46E-06
	B	4.32E-05	4.32E-05	4.32E-05	4.32E-05	4.32E-05	4.32E-05	4.32E-05	4.32E-05	4.32E-05	4.32E-05	4.32E-05
	T	5.36E-05	5.36E-05	5.31E-05	5.31E-05	5.32E-05	5.28E-05	5.01E-05	5.31E-05	5.24E-05	5.24E-05	5.27E-05

*"MUSCLE" VALUES MAY BE USED FOR "SEPARABLE FAT" WITH ADJUSTMENT (SEE TEXT)
PRINCIPLE REFERENCE-KYLES, J. ET AL., NUCL. PHYS. A150, 143 (1970)
DATE DECAY DATA REVIEWED-APRIL 1971

S, AVERAGE DOSE EQUIVALENT PER UNIT ACCUMULATED ACTIVITY (REM/UCI-DAY), FOR 33-ARSENIC-74 (TR=1.790E 01 DAYS)

DATE OF TABLE 11-27-74

TARGET ORGANS		SOURCE ORGANS										
		ADRENALS	BLAD CON	S CONT	SI+CONT	ULI CONT	LLI CONT	KIDNEYS	LIVER	LUNG	RESP LYM NODE	MUSCLE*
ADRENALS	G	6.44E-02	3.07E-05	2.77E-04	1.61E-04	1.36E-04	6.48E-05	1.62E-03	6.35E-04	3.17E-04	3.17E-04	2.00E-04
	B	9.73E-01	0.0	0.0	0.0	0.0	0.0	0.0	0.0	0.0	0.0	0.0
	T	1.04E 00	3.07E-05	2.77E-04	1.61E-04	1.36E-04	6.48E-05	1.62E-03	6.35E-04	3.17E-04	3.17E-04	2.00E-04
BLAD WALL	G	1.67E-05	9.68E-03	6.07E-05	4.24E-04	2.52E-04	7.23E-04	5.17E-05	4.28E-05	1.00E-05	1.00E-05	2.32E-04
	B	0.0	3.40E-02	0.0	0.0	0.0	0.0	0.0	0.0	0.0	0.0	0.0
	T	1.67E-05	4.37E-02	6.07E-05	4.24E-04	2.52E-04	7.23E-04	5.17E-05	4.28E-05	1.00E-05	1.00E-05	2.32E-04
GI TRACT S WALL	G	3.85E-04	4.61E-05	6.79E-03	4.43E-04	4.70E-04	2.32E-04	4.37E-04	2.48E-04	2.42E-04	2.42E-04	1.84E-04
	B	0.0	0.0	2.72E-02	0.0	0.0	0.0	0.0	0.0	0.0	0.0	0.0
	T	3.85E-04	4.61E-05	3.40E-02	4.43E-04	4.70E-04	2.32E-04	4.37E-04	2.48E-04	2.42E-04	2.42E-04	1.84E-04
SI+CONT	G	1.25E-04	3.42E-04	3.42E-04	4.09E-03	2.11E-03	1.16E-03	3.58E-04	2.06E-04	3.72E-05	3.72E-05	2.02E-04
	B	0.0	0.0	0.0	1.70E-02	0.0	0.0	0.0	0.0	0.0	0.0	0.0
	T	1.25E-04	3.42E-04	3.42E-04	2.11E-02	2.11E-03	1.16E-03	3.58E-04	2.06E-04	3.72E-05	3.72E-05	2.02E-04
ULI WALL	G	1.38E-04	3.02E-04	4.24E-04	3.00E-03	5.60E-03	5.45E-04	3.75E-04	3.32E-04	5.08E-05	5.08E-05	2.13E-04
	B	0.0	0.0	0.0	0.0	3.09E-02	0.0	0.0	0.0	0.0	0.0	0.0
	T	1.38E-04	3.02E-04	4.24E-04	3.00E-03	3.65E-02	5.45E-04	3.75E-04	3.32E-04	5.08E-05	5.08E-05	2.13E-04
LLI WALL	G	4.48E-05	9.13E-04	1.67E-04	8.81E-04	3.96E-04	6.74E-03	1.15E-04	4.17E-05	1.05E-05	1.05E-05	2.21E-04
	B	0.0	0.0	0.0	0.0	0.0	5.04E-02	0.0	0.0	0.0	0.0	0.0
	T	4.48E-05	9.13E-04	1.67E-04	8.81E-04	3.96E-04	5.72E-02	1.15E-04	4.17E-05	1.05E-05	1.05E-05	2.21E-04
KIDNEYS	G	1.49E-03	5.01E-05	4.28E-04	4.13E-04	3.56E-04	1.10E-04	9.79E-03	4.89E-04	1.36E-04	1.36E-04	1.87E-04
	B	0.0	0.0	0.0	0.0	0.0	0.0	4.39E-02	0.0	0.0	0.0	0.0
	T	1.49E-03	5.01E-05	4.28E-04	4.13E-04	3.56E-04	1.10E-04	5.37E-02	4.89E-04	1.36E-04	1.36E-04	1.87E-04
LIVER	G	6.34E-04	3.75E-05	2.65E-04	2.36E-04	3.21E-04	4.61E-05	5.18E-04	3.39E-03	3.10E-04	3.10E-04	1.46E-04
	B	0.0	0.0	0.0	0.0	0.0	0.0	0.0	7.56E-03	0.0	0.0	0.0
	T	6.34E-04	3.75E-05	2.65E-04	2.36E-04	3.21E-04	4.61E-05	5.18E-04	1.10E-02	3.10E-04	3.10E-04	1.46E-04
LUNGS	G	3.04E-04	6.95E-06	2.41E-04	4.43E-05	4.59E-05	1.44E-05	1.25E-04	3.13E-04	1.96E-03	1.96E-03	1.75E-04
	B	0.0	0.0	0.0	0.0	0.0	0.0	0.0	0.0	1.36E-02	1.36E-02	0.0
	T	3.04E-04	6.95E-06	2.41E-04	4.43E-05	4.59E-05	1.44E-05	1.25E-04	3.13E-04	1.56E-02	1.56E-02	1.75E-04
RESP LYM NODE	G	3.04E-04	6.95E-06	2.41E-04	4.43E-05	4.59E-05	1.44E-05	1.25E-04	3.13E-04	1.96E-03	1.96E-03	1.75E-04
	B	0.0	0.0	0.0	0.0	0.0	0.0	0.0	0.0	1.35E-02	9.08E-01	0.0
	T	3.04E-04	6.95E-06	2.41E-04	4.43E-05	4.59E-05	1.44E-05	1.25E-04	3.13E-04	1.55E-02	9.10E-01	1.75E-04
MUSCLE*	G	2.00E-04	2.32E-04	1.84E-04	2.02E-04	1.93E-04	2.21E-04	1.87E-04	1.46E-04	1.75E-04	1.75E-04	2.00E-04
	B	0.0	0.0	0.0	0.0	0.0	0.0	0.0	0.0	0.0	0.0	4.86E-04
	T	2.00E-04	2.32E-04	1.84E-04	2.02E-04	1.93E-04	2.21E-04	1.87E-04	1.46E-04	1.75E-04	1.75E-04	6.86E-04
OVARIES	G	7.13E-05	7.86E-04	8.27E-05	1.17E-03	1.57E-03	2.08E-03	1.59E-04	3.48E-05	2.04E-05	2.04E-05	2.59E-04
	B	0.0	0.0	0.0	0.0	0.0	0.0	0.0	0.0	0.0	0.0	0.0
	T	7.13E-05	7.86E-04	8.27E-05	1.17E-03	1.57E-03	2.08E-03	1.59E-04	3.48E-05	2.04E-05	2.04E-05	2.59E-04

33-ARSENIC-74 CONTINUED

SOURCE ORGANS

TARGET ORGANS		ADRENALS	BLAD CON	S CONT	SI+CONT	ULI CONT	LLI CONT	KIDNEYS	LIVER	LUNG	RESP LYM NODE	MUSCLE*
PANCREAS	G	1.10E-03	3.47E-05	2.26E-03	2.71E-04	2.37E-04	9.76E-05	8.59E-04	6.17E-04	3.54E-04	3.54E-04	2.34E-04
	B	0.0	0.0	0.0	0.0	0.0	0.0	0.0	0.0	0.0	0.0	0.0
	T	1.10E-03	3.47E-05	2.26E-03	2.71E-04	2.37E-04	9.76E-05	8.59E-04	6.17E-04	3.54E-04	3.54E-04	2.34E-04
SKELETON BONE	G	1.78E-04	7.62E-05	7.86E-05	1.02E-04	9.38E-05	1.35E-04	1.28E-04	9.55E-05	1.30E-04	1.30E-04	1.45E-04
	B	0.0	0.0	0.0	0.0	0.0	0.0	0.0	0.0	0.0	0.0	0.0
	T	1.78E-04	7.62E-05	7.86E-05	1.02E-04	9.38E-05	1.35E-04	1.28E-04	9.55E-05	1.30E-04	1.30E-04	1.45E-04
R MARROW	G	3.18E-04	1.62E-04	1.36E-04	3.23E-04	2.79E-04	4.05E-04	3.24E-04	1.40E-04	1.64E-04	1.64E-04	1.79E-04
	B	0.0	0.0	0.0	0.0	0.0	0.0	0.0	0.0	0.0	0.0	0.0
	T	3.18E-04	1.62E-04	1.36E-04	3.23E-04	2.79E-04	4.05E-04	3.24E-04	1.40E-04	1.64E-04	1.64E-04	1.79E-04
Y MARROW	G	1.72E-04	6.98E-05	1.09E-04	1.41E-04	1.33E-04	1.67E-04	1.59E-04	1.40E-04	1.37E-04	1.37E-04	1.46E-04
	B	0.0	0.0	0.0	0.0	0.0	0.0	0.0	0.0	0.0	0.0	0.0
	T	1.72E-04	6.98E-05	1.09E-04	1.41E-04	1.33E-04	1.67E-04	1.59E-04	1.40E-04	1.37E-04	1.37E-04	1.46E-04
T E CL	G	1.78E-04	7.62E-05	7.86E-05	1.02E-04	9.38E-05	1.35E-04	1.28E-04	9.55E-05	1.30E-04	1.30E-04	1.45E-04
	B	0.0	0.0	0.0	0.0	0.0	0.0	0.0	0.0	0.0	0.0	0.0
	T	1.78E-04	7.62E-05	7.86E-05	1.02E-04	9.38E-05	1.35E-04	1.28E-04	9.55E-05	1.30E-04	1.30E-04	1.45E-04
SKIN	G	9.01E-05	8.62E-05	7.82E-05	7.05E-05	7.30E-05	7.76E-05	8.72E-05	7.94E-05	8.94E-05	8.94E-05	1.20E-04
	B	0.0	0.0	0.0	0.0	0.0	0.0	0.0	0.0	0.0	0.0	0.0
	T	9.01E-05	8.62E-05	7.82E-05	7.05E-05	7.30E-05	7.76E-05	8.72E-05	7.94E-05	8.94E-05	8.94E-05	1.20E-04
SPLEEN	G	8.33E-04	3.02E-05	1.24E-03	2.05E-04	1.63E-04	1.25E-04	1.08E-03	1.33E-04	2.79E-04	2.79E-04	1.92E-04
	B	0.0	0.0	0.0	0.0	0.0	0.0	0.0	0.0	0.0	0.0	0.0
	T	8.33E-04	3.02E-05	1.24E-03	2.05E-04	1.63E-04	1.25E-04	1.08E-03	1.33E-04	2.79E-04	2.79E-04	1.92E-04
TESTES	G	9.64E-06	6.60E-04	5.69E-06	5.04E-05	6.85E-05	2.61E-04	2.01E-05	1.75E-05	3.42E-06	3.42E-06	1.62E-04
	B	0.0	0.0	0.0	0.0	0.0	0.0	0.0	0.0	0.0	0.0	0.0
	T	9.64E-06	6.60E-04	5.69E-06	5.04E-05	6.85E-05	2.61E-04	2.01E-05	1.75E-05	3.42E-06	3.42E-06	1.62E-04
THYMUS	G	1.19E-04	4.43E-06	4.08E-05	1.87E-05	2.04E-05	7.94E-06	4.80E-05	1.66E-04	4.86E-04	4.86E-04	2.15E-04
	B	0.0	0.0	0.0	0.0	0.0	0.0	0.0	0.0	0.0	0.0	0.0
	T	1.19E-04	4.43E-06	4.08E-05	1.87E-05	2.04E-05	7.94E-06	4.80E-05	1.66E-04	4.86E-04	4.86E-04	2.15E-04
THYROID	G	2.64E-05	1.38E-06	2.04E-05	5.52E-06	5.90E-06	2.56E-06	1.28E-05	2.44E-05	1.61E-04	1.61E-04	1.80E-04
	B	0.0	0.0	0.0	0.0	0.0	0.0	0.0	0.0	0.0	0.0	0.0
	T	2.64E-05	1.38E-06	2.04E-05	5.52E-06	5.90E-06	2.56E-06	1.28E-05	2.44E-05	1.61E-04	1.61E-04	1.80E-04
UTERUS	G	5.13E-05	1.93E-03	1.18E-04	1.13E-03	5.86E-04	7.24E-04	1.09E-04	5.67E-05	1.30E-05	1.30E-05	2.61E-04
	B	0.0	0.0	0.0	0.0	0.0	0.0	0.0	0.0	0.0	0.0	0.0
	T	5.13E-05	1.93E-03	1.18E-04	1.13E-03	5.86E-04	7.24E-04	1.09E-04	5.67E-05	1.30E-05	1.30E-05	2.61E-04
T BODY	G	2.21E-04	2.45E-04	2.33E-04	2.56E-04	2.50E-04	2.48E-04	2.22E-04	2.23E-04	1.90E-04	1.90E-04	1.90E-04
	B	1.95E-04	2.19E-05	5.84E-05	1.56E-04	9.28E-05	1.15E-04	1.95E-04	1.95E-04	1.95E-04	1.95E-04	1.95E-04
	T	4.15E-04	2.67E-04	2.91E-04	4.12E-04	3.43E-04	3.64E-04	4.17E-04	4.18E-04	3.85E-04	3.85E-04	3.84E-04

CONTINUED NEXT PAGE

33-ARSENIC-74 CONTINUED

TARGET ORGANS		SOURCE ORGANS										
		OVARIES	PANCREAS	COR BONE	CAN BONE	R MARROW	Y MARROW	SKIN	SPLEEN	TESTES	THYROID	T BODY
ADRENALS	G	7.91E-05	1.08E-03	2.25E-04	2.25E-04	2.46E-04	1.31E-04	8.91E-05	8.05E-04	9.64E-06	2.64E-05	2.93E-04
	B	0.0	0.0	0.0	0.0	0.0	0.0	0.0	0.0	0.0	0.0	1.95E-04
	T	7.91E-05	1.08E-03	2.25E-04	2.25E-04	2.46E-04	1.31E-04	8.91E-05	8.05E-04	9.64E-06	2.64E-05	4.88E-04
BLAD WALL	G	8.74E-04	2.46E-05	8.26E-05	8.26E-05	9.62E-05	3.47E-05	8.51E-05	2.15E-05	6.68E-04	1.39E-06	2.42E-04
	B	0.0	0.0	0.0	0.0	0.0	0.0	0.0	0.0	0.0	0.0	1.95E-04
	T	8.74E-04	2.46E-05	8.26E-05	8.26E-05	9.62E-05	3.47E-05	8.51E-05	2.15E-05	6.68E-04	1.39E-06	4.37E-04
GI TRACT S WALL	G	1.09E-04	2.21E-03	7.60E-05	7.60E-05	1.33E-04	9.76E-05	8.54E-05	1.27E-03	1.48E-05	1.71E-05	2.32E-04
	B	0.0	0.0	0.0	0.0	0.0	0.0	0.0	0.0	0.0	0.0	1.95E-04
	T	1.09E-04	2.21E-03	7.60E-05	7.60E-05	1.33E-04	9.76E-05	8.54E-05	1.27E-03	1.48E-05	1.71E-05	4.27E-04
SI+CONT	G	1.53E-03	2.31E-04	1.06E-04	1.06E-04	3.50E-04	1.37E-04	7.33E-05	1.81E-04	7.03E-05	1.55E-06	2.59E-04
	B	0.0	0.0	0.0	0.0	0.0	0.0	0.0	0.0	0.0	0.0	1.95E-04
	T	1.53E-03	2.31E-04	1.06E-04	1.06E-04	3.50E-04	1.37E-04	7.33E-05	1.81E-04	7.03E-05	1.55E-06	4.53E-04
ULI WALL	G	1.44E-03	2.82E-04	9.30E-05	9.30E-05	2.67E-04	1.12E-04	7.78E-05	1.83E-04	4.37E-05	2.00E-06	2.55E-04
	B	0.0	0.0	0.0	0.0	0.0	0.0	0.0	0.0	0.0	0.0	1.95E-04
	T	1.44E-03	2.82E-04	9.30E-05	9.30E-05	2.67E-04	1.12E-04	7.78E-05	1.83E-04	4.37E-05	2.00E-06	4.50E-04
LLI WALL	G	1.83E-03	7.03E-05	1.26E-04	1.26E-04	4.00E-04	1.08E-04	8.03E-05	9.03E-05	3.62E-04	2.15E-06	2.60E-04
	B	0.0	0.0	0.0	0.0	0.0	0.0	0.0	0.0	0.0	0.0	1.95E-04
	T	1.83E-03	7.03E-05	1.26E-04	1.26E-04	4.00E-04	1.08E-04	8.03E-05	9.03E-05	3.62E-04	2.15E-06	4.54E-04
KIDNEYS	G	1.48E-04	8.05E-04	1.24E-04	1.24E-04	3.10E-04	1.59E-04	9.90E-05	1.10E-03	1.43E-05	7.76E-06	2.32E-04
	B	0.0	0.0	0.0	0.0	0.0	0.0	0.0	0.0	0.0	0.0	1.95E-04
	T	1.48E-04	8.05E-04	1.24E-04	1.24E-04	3.10E-04	1.59E-04	9.90E-05	1.10E-03	1.43E-05	7.76E-06	4.26E-04
LIVER	G	8.10E-05	5.33E-04	9.30E-05	9.30E-05	1.33E-04	1.44E-04	8.89E-05	1.40E-04	7.75E-06	2.15E-05	2.30E-04
	B	0.0	0.0	0.0	0.0	0.0	0.0	0.0	0.0	0.0	0.0	1.95E-04
	T	8.10E-05	5.33E-04	9.30E-05	9.30E-05	1.33E-04	1.44E-04	8.89E-05	1.40E-04	7.75E-06	2.15E-05	4.24E-04
LUNGS	G	1.56E-05	3.10E-04	1.29E-04	1.29E-04	1.57E-04	1.31E-04	8.97E-05	2.85E-04	2.16E-06	1.41E-04	2.02E-04
	B	0.0	0.0	0.0	0.0	0.0	0.0	0.0	0.0	0.0	0.0	1.95E-04
	T	1.56E-05	3.10E-04	1.29E-04	1.29E-04	1.57E-04	1.31E-04	8.97E-05	2.85E-04	2.16E-06	1.41E-04	3.96E-04
RESP LYM NODE	G	1.56E-05	3.10E-04	1.29E-04	1.29E-04	1.57E-04	1.31E-04	8.97E-05	2.85E-04	2.16E-06	1.41E-04	2.02E-04
	B	0.0	0.0	0.0	0.0	0.0	0.0	0.0	0.0	0.0	0.0	1.95E-04
	T	1.56E-05	3.10E-04	1.29E-04	1.29E-04	1.57E-04	1.31E-04	8.97E-05	2.85E-04	2.16E-06	1.41E-04	3.96E-04
MUSCLE*	G	2.59E-04	2.34E-04	1.45E-04	1.45E-04	1.71E-04	1.35E-04	1.20E-04	1.92E-04	1.62E-04	1.80E-04	1.90E-04
	B	0.0	0.0	0.0	0.0	0.0	0.0	0.0	0.0	0.0	0.0	1.95E-04
	T	2.59E-04	2.34E-04	1.45E-04	1.45E-04	1.71E-04	1.35E-04	1.20E-04	1.92E-04	1.62E-04	1.80E-04	3.84E-04
OVARIES	G	1.07E-01	6.06E-05	1.40E-04	1.40E-04	4.56E-04	1.12E-04	4.48E-05	1.31E-04	2.84E-45	2.56E-06	2.16E-04
	B	1.24E 00	0.0	0.0	0.0	0.0	0.0	0.0	0.0	0.0	0.0	1.95E-04
	T	1.35E 00	6.06E-05	1.40E-04	1.40E-04	4.56E-04	1.12E-04	4.48E-05	1.31E-04	2.84E-45	2.56E-06	4.11E-04

33-ARSENIC-74 CONTINUED

TARGET ORGANS		SOURCE ORGANS										
		OVARIES	PANCREAS	COR BONE	CAN BONE	R MARROW	Y MARROW	SKIN	SPLEEN	TESTES	THYROID	T BODY
PANCREAS	G	7.92E-05	2.88E-02	1.20E-04	1.20E-04	2.15E-04	1.67E-04	7.52E-05	2.51E-03	6.14E-06	8.79E-06	2.25E-04
	B	0.0	1.36E-01	0.0	0.0	0.0	0.0	0.0	0.0	0.0	0.0	1.95E-04
	T	7.92E-05	1.65E-01	1.20E-04	1.20E-04	2.15E-04	1.67E-04	7.52E-05	2.51E-03	6.14E-06	8.79E-06	4.20E-04
SKELETON BONE	G	1.20E-04	1.19E-04	4.60E-04	4.60E-04	3.07E-04	3.42E-04	1.12E-04	1.00E-04	8.65E-05	9.85E-05	1.95E-04
	B	0.0	0.0	2.72E-03	1.65E-03	7.19E-04	0.0	0.0	0.0	0.0	0.0	1.95E-04
	T	1.20E-04	1.19E-04	3.18E-03	2.11E-03	1.03E-03	3.42E-04	1.12E-04	1.00E-04	8.65E-05	9.85E-05	3.89E-04
R MARROW	G	3.99E-04	2.25E-04	4.11E-04	4.11E-04	9.89E-04	3.55E-04	1.04E-04	1.48E-04	6.87E-05	1.09E-04	2.16E-04
	B	0.0	0.0	1.15E-04	3.59E-03	6.68E-03	0.0	0.0	0.0	0.0	0.0	1.95E-04
	T	3.99E-04	2.25E-04	5.26E-04	4.00E-03	7.67E-03	3.55E-04	1.04E-04	1.48E-04	6.87E-05	1.09E-04	4.10E-04
Y MARROW	G	1.60E-04	1.40E-04	3.98E-04	3.98E-04	3.80E-04	5.83E-04	1.18E-04	1.51E-04	3.72E-05	5.24E-05	1.83E-04
	B	0.0	0.0	0.0	0.0	0.0	9.08E-03	0.0	0.0	0.0	0.0	1.95E-04
	T	1.60E-04	1.40E-04	3.98E-04	3.98E-04	3.80E-04	9.66E-03	1.18E-04	1.51E-04	3.72E-05	5.24E-05	3.78E-04
T E CL	G	1.20E-04	1.19E-04	4.60E-04	4.60E-04	4.16E-04	3.78E-04	1.12E-04	1.00E-04	8.65E-05	9.85E-05	1.96E-04
	B	0.0	0.0	1.74E-03	2.87E-03	2.63E-03	2.27E-03	0.0	0.0	0.0	0.0	1.95E-04
	T	1.20E-04	1.19E-04	2.20E-03	3.33E-03	3.04E-03	2.65E-03	1.12E-04	1.00E-04	8.65E-05	9.85E-05	3.91E-04
SKIN	G	6.97E-05	6.74E-05	1.14E-04	1.14E-04	9.84E-05	1.27E-04	2.83E-04	8.33E-05	2.08E-04	1.14E-04	1.19E-04
	B	0.0	0.0	0.0	0.0	0.0	0.0	5.24E-03	0.0	0.0	0.0	1.95E-04
	T	6.97E-05	6.74E-05	1.14E-04	1.14E-04	9.84E-05	1.27E-04	5.52E-03	8.33E-05	2.08E-04	1.14E-04	3.14E-04
SPLEEN	G	8.98E-05	2.47E-03	1.11E-04	1.11E-04	1.10E-04	1.30E-04	8.89E-05	1.74E-02	1.61E-05	1.83E-05	2.34E-04
	B	0.0	0.0	0.0	0.0	0.0	0.0	0.0	7.56E-02	0.0	0.0	1.95E-04
	T	8.98E-05	2.47E-03	1.11E-04	1.11E-04	1.10E-04	1.30E-04	8.89E-05	9.31E-02	1.61E-05	1.83E-05	4.29E-04
TESTES	G	2.84E-45	9.35E-06	7.70E-05	7.70E-05	5.68E-05	1.26E-04	1.11E-04	1.29E-05	4.87E-02	5.15E-07	2.45E-04
	B	0.0	0.0	0.0	0.0	0.0	0.0	0.0	0.0	3.89E-01	0.0	1.95E-04
	T	2.84E-45	9.35E-06	7.70E-05	7.70E-05	5.68E-05	1.26E-04	1.11E-04	1.29E-05	4.38E-01	5.15E-07	4.40E-04
THYMUS	G	8.35E-06	6.96E-05	1.02E-04	1.02E-04	6.25E-05	4.89E-05	1.11E-04	6.70E-05	1.60E-06	5.66E-04	1.95E-04
	B	0.0	0.0	0.0	0.0	0.0	0.0	0.0	0.0	0.0	0.0	1.95E-04
	T	8.35E-06	6.96E-05	1.02E-04	1.02E-04	6.25E-05	4.89E-05	1.11E-04	6.70E-05	1.60E-06	5.66E-04	3.89E-04
THYROID	G	2.56E-06	2.19E-05	1.36E-04	1.36E-04	1.20E-04	5.91E-05	1.08E-04	1.98E-05	5.15E-07	6.65E-02	1.92E-04
	B	0.0	0.0	0.0	0.0	0.0	0.0	0.0	0.0	0.0	6.81E-01	1.95E-04
	T	2.56E-06	2.19E-05	1.36E-04	1.36E-04	1.20E-04	5.91E-05	1.08E-04	1.98E-05	5.15E-07	7.47E-01	3.86E-04
UTERUS	G	2.32E-03	8.20E-05	8.15E-05	8.15E-05	2.44E-04	8.75E-05	7.81E-05	6.40E-05	2.84E-45	2.43E-06	2.40E-04
	B	0.0	0.0	0.0	0.0	0.0	0.0	0.0	0.0	0.0	0.0	1.95E-04
	T	2.32E-03	8.20E-05	8.15E-05	8.15E-05	2.44E-04	8.75E-05	7.81E-05	6.40E-05	2.84E-45	2.43E-06	4.35E-04
T BODY	G	2.61E-04	2.56E-04	1.88E-04	1.88E-04	2.09E-04	1.69E-04	1.21E-04	2.22E-04	1.88E-04	1.72E-04	1.90E-04
	B	1.95E-04	1.95E-04	1.95E-04	1.95E-04	1.95E-04	1.95E-04	1.95E-04	1.95E-04	1.95E-04	1.95E-04	1.95E-04
	T	4.56E-04	4.51E-04	3.83E-04	3.83E-04	4.04E-04	3.64E-04	3.16E-04	4.16E-04	3.82E-04	3.66E-04	3.84E-04

*"MUSCLE" VALUES MAY BE USED FOR "SEPARABLE FAT" WITH ADJUSTMENT (SEE TEXT)
PRINCIPLE REFERENCE-HAMILTON, J. H., COFFMAN, F. E., RAMAYYA, A. V. AND JOHNSON, NOAH R., NUCL. PHYS. A132, 254 (1969)
DATE DECAY DATA REVIEWED-MARCH 1971

S, AVERAGE DOSE EQUIVALENT PER UNIT ACCUMULATED ACTIVITY (REM/UCI-DAY), FOR 34-SELENIUM-75 (TR=1.200E 02 DAYS)

DATE OF TABLE 11-27-74

TARGET ORGANS		SOURCE ORGANS										
		ADRENALS	BLAD CON	S CONT	SI+CONT	ULI CONT	LLI CONT	KIDNEYS	LIVER	LUNG	RESP LYM NODE	MUSCLE*
ADRENALS	G	4.21E-02	1.29E-05	1.65E-04	9.16E-05	6.33E-05	2.97E-05	7.25E-04	3.28E-04	1.71E-04	1.71E-04	9.95E-05
	B	5.29E-02	0.0	0.0	0.0	0.0	0.0	0.0	0.0	0.0	0.0	0.0
	T	9.50E-02	1.29E-05	1.65E-04	9.16E-05	6.33E-05	2.97E-05	7.25E-04	3.28E-04	1.71E-04	1.71E-04	9.95E-05
BLAD WALL	G	8.25E-06	4.98E-03	1.95E-05	1.88E-04	1.43E-04	4.38E-04	2.16E-05	1.34E-05	3.48E-06	3.48E-06	1.19E-04
	B	0.0	1.85E-03	0.0	0.0	0.0	0.0	0.0	0.0	0.0	0.0	0.0
	T	8.25E-06	6.83E-03	1.95E-05	1.88E-04	1.43E-04	4.38E-04	2.16E-05	1.34E-05	3.48E-06	3.48E-06	1.19E-04
GI TRACT S WALL	G	1.98E-04	1.95E-05	3.50E-03	2.45E-04	2.52E-04	1.21E-04	2.33E-04	1.29E-04	1.25E-04	1.25E-04	9.16E-05
	B	0.0	0.0	1.48E-03	0.0	0.0	0.0	0.0	0.0	0.0	0.0	0.0
	T	1.98E-04	1.95E-05	4.98E-03	2.45E-04	2.52E-04	1.21E-04	2.33E-04	1.29E-04	1.25E-04	1.25E-04	9.16E-05
SI+CONT	G	5.87E-05	1.94E-04	1.79E-04	2.25E-03	1.12E-03	6.26E-04	1.93E-04	1.12E-04	1.44E-05	1.44E-05	1.04E-04
	B	0.0	0.0	0.0	9.25E-04	0.0	0.0	0.0	0.0	0.0	0.0	0.0
	T	5.87E-05	1.94E-04	1.79E-04	3.18E-03	1.12E-03	6.26E-04	1.93E-04	1.12E-04	1.44E-05	1.44E-05	1.04E-04
ULI WALL	G	6.44E-05	1.56E-04	2.36E-04	1.68E-03	2.91E-03	2.88E-04	1.95E-04	1.69E-04	1.80E-05	1.80E-05	1.10E-04
	B	0.0	0.0	0.0	0.0	1.68E-03	0.0	0.0	0.0	0.0	0.0	0.0
	T	6.44E-05	1.56E-04	2.36E-04	1.68E-03	4.59E-03	2.88E-04	1.95E-04	1.69E-04	1.80E-05	1.80E-05	1.10E-04
LLI WALL	G	1.71E-05	4.85E-04	8.54E-05	4.84E-04	2.07E-04	3.48E-03	5.53E-05	1.72E-05	6.27E-06	6.27E-06	1.14E-04
	B	0.0	0.0	0.0	0.0	0.0	2.74E-03	0.0	0.0	0.0	0.0	0.0
	T	1.71E-05	4.85E-04	8.54E-05	4.84E-04	2.07E-04	6.22E-03	5.53E-05	1.72E-05	6.27E-06	6.27E-06	1.14E-04
KIDNEYS	G	7.74E-04	2.02E-05	2.35E-04	2.11E-04	1.88E-04	6.13E-05	5.49E-03	2.61E-04	6.13E-05	6.13E-05	9.40E-05
	B	0.0	0.0	0.0	0.0	0.0	0.0	2.39E-03	0.0	0.0	0.0	0.0
	T	7.74E-04	2.02E-05	2.35E-04	2.11E-04	1.88E-04	6.13E-05	7.88E-03	2.61E-04	6.13E-05	6.13E-05	9.40E-05
LIVER	G	3.34E-04	1.46E-05	1.35E-04	1.25E-04	1.74E-04	1.94E-05	2.62E-04	1.83E-03	1.65E-04	1.65E-04	7.30E-05
	B	0.0	0.0	0.0	0.0	0.0	0.0	0.0	4.11E-04	0.0	0.0	0.0
	T	3.34E-04	1.46E-05	1.35E-04	1.25E-04	1.74E-04	1.94E-05	2.62E-04	2.24E-03	1.65E-04	1.65E-04	7.30E-05
LUNGS	G	1.66E-04	2.04E-06	1.17E-04	1.76E-05	1.93E-05	5.95E-06	5.86E-05	1.67E-04	1.18E-03	1.18E-03	8.88E-05
	B	0.0	0.0	0.0	0.0	0.0	0.0	0.0	0.0	7.40E-04	7.40E-04	0.0
	T	1.66E-04	2.04E-06	1.17E-04	1.76E-05	1.93E-05	5.95E-06	5.86E-05	1.67E-04	1.92E-03	1.92E-03	8.88E-05
RESP LYM NODE	G	1.66E-04	2.04E-06	1.17E-04	1.76E-05	1.93E-05	5.95E-06	5.86E-05	1.67E-04	1.18E-03	1.18E-03	8.88E-05
	B	0.0	0.0	0.0	0.0	0.0	0.0	0.0	0.0	3.90E-04	4.94E-02	0.0
	T	1.66E-04	2.04E-06	1.17E-04	1.76E-05	1.93E-05	5.95E-06	5.86E-05	1.67E-04	1.57E-03	5.05E-02	8.88E-05
MUSCLE*	G	9.95E-05	1.19E-04	9.41E-05	1.04E-04	9.94E-05	1.14E-04	9.40E-05	7.30E-05	8.88E-05	8.88E-05	1.01E-04
	B	0.0	0.0	0.0	0.0	0.0	0.0	0.0	0.0	0.0	0.0	2.64E-05
	T	9.95E-05	1.19E-04	9.41E-05	1.04E-04	9.94E-05	1.14E-04	9.40E-05	7.30E-05	8.88E-05	8.88E-05	1.27E-04
OVARIES	G	3.98E-05	4.91E-04	3.15E-05	6.93E-04	8.03E-04	1.25E-03	8.03E-05	2.83E-05	8.18E-06	8.18E-06	1.34E-04
	B	0.0	0.0	0.0	0.0	0.0	0.0	0.0	0.0	0.0	0.0	0.0
	T	3.98E-05	4.91E-04	3.15E-05	6.93E-04	8.03E-04	1.25E-03	8.03E-05	2.83E-05	8.18E-06	8.18E-06	1.34E-04

34-SELENIUM-75 CONTINUED

SOURCE ORGANS

TARGET ORGANS		ADRENALS	BLAD CON	S CONT	SI+CONT	ULI CONT	LLI CONT	KIDNEYS	LIVER	LUNG	RESP LYM NODE	MUSCLE*
PANCREAS	G	5.86E-04	1.86E-05	1.21E-03	1.39E-04	1.54E-04	4.90E-05	4.39E-04	2.81E-04	1.76E-04	1.76E-04	1.21E-04
	B	0.0	0.0	0.0	0.0	0.0	0.0	0.0	0.0	0.0	0.0	0.0
	T	5.86E-04	1.86E-05	1.21E-03	1.39E-04	1.54E-04	4.90E-05	4.39E-04	2.81E-04	1.76E-04	1.76E-04	1.21E-04
SKELETON BONE	G	1.13E-04	5.24E-05	5.12E-05	6.99E-05	6.32E-05	9.00E-05	8.14E-05	6.29E-05	8.25E-05	8.25E-05	7.04E-05
	B	0.0	0.0	0.0	0.0	0.0	0.0	0.0	0.0	0.0	0.0	0.0
	T	1.13E-04	5.24E-05	5.12E-05	6.99E-05	6.32E-05	9.00E-05	8.14E-05	6.29E-05	8.25E-05	8.25E-05	7.04E-05
R MARROW	G	2.05E-04	1.20E-04	9.11E-05	2.31E-04	1.99E-04	2.75E-04	2.11E-04	9.17E-05	1.05E-04	1.05E-04	1.13E-04
	B	0.0	0.0	0.0	0.0	0.0	0.0	0.0	0.0	0.0	0.0	0.0
	T	2.05E-04	1.20E-04	9.11E-05	2.31E-04	1.99E-04	2.75E-04	2.11E-04	9.17E-05	1.05E-04	1.05E-04	1.13E-04
Y MARROW	G	1.08E-04	4.88E-05	7.13E-05	9.77E-05	9.04E-05	1.11E-04	1.00E-04	9.29E-05	8.54E-05	8.54E-05	8.70E-05
	B	0.0	0.0	0.0	0.0	0.0	0.0	0.0	0.0	0.0	0.0	0.0
	T	1.08E-04	4.88E-05	7.13E-05	9.77E-05	9.04E-05	1.11E-04	1.00E-04	9.29E-05	8.54E-05	8.54E-05	8.70E-05
T E CL	G	1.13E-04	5.24E-05	5.12E-05	6.99E-05	6.32E-05	9.00E-05	8.14E-05	6.29E-05	8.25E-05	8.25E-05	7.04E-05
	B	0.0	0.0	0.0	0.0	0.0	0.0	0.0	0.0	0.0	0.0	0.0
	T	1.13E-04	5.24E-05	5.12E-05	6.99E-05	6.32E-05	9.00E-05	8.14E-05	6.29E-05	8.25E-05	8.25E-05	7.04E-05
SKIN	G	3.94E-05	3.91E-05	3.29E-05	3.11E-05	3.14E-05	3.58E-05	3.93E-05	3.60E-05	3.99E-05	3.99E-05	5.40E-05
	B	0.0	0.0	0.0	0.0	0.0	0.0	0.0	0.0	0.0	0.0	0.0
	T	3.94E-05	3.91E-05	3.29E-05	3.11E-05	3.14E-05	3.58E-05	3.93E-05	3.60E-05	3.99E-05	3.99E-05	5.40E-05
SPLEEN	G	4.41E-04	2.20E-05	6.70E-04	1.05E-04	9.33E-05	5.54E-05	5.82E-04	6.39E-05	1.53E-04	1.53E-04	9.79E-05
	B	0.0	0.0	0.0	0.0	0.0	0.0	0.0	0.0	0.0	0.0	0.0
	T	4.41E-04	2.20E-05	6.70E-04	1.05E-04	9.33E-05	5.54E-05	5.82E-04	6.39E-05	1.53E-04	1.53E-04	9.79E-05
TESTES	G	3.21E-06	3.16E-04	3.57E-06	2.32E-05	2.35E-05	1.32E-04	7.85E-06	5.71E-06	9.39E-07	9.39E-07	7.88E-05
	B	0.0	0.0	0.0	0.0	0.0	0.0	0.0	0.0	0.0	0.0	0.0
	T	3.21E-06	3.16E-04	3.57E-06	2.32E-05	2.35E-05	1.32E-04	7.85E-06	5.71E-06	9.39E-07	9.39E-07	7.88E-05
THYMUS	G	3.47E-05	1.25E-06	1.69E-05	7.23E-06	8.25E-06	2.66E-06	1.64E-05	5.34E-05	2.73E-04	2.73E-04	1.65E-04
	B	0.0	0.0	0.0	0.0	0.0	0.0	0.0	0.0	0.0	0.0	0.0
	T	3.47E-05	1.25E-06	1.69E-05	7.23E-06	8.25E-06	2.66E-06	1.64E-05	5.34E-05	2.73E-04	2.73E-04	1.65E-04
THYROID	G	1.08E-05	3.01E-07	7.95E-06	1.64E-06	1.79E-06	6.64E-07	4.56E-06	1.32E-05	6.36E-05	6.36E-05	8.94E-05
	B	0.0	0.0	0.0	0.0	0.0	0.0	0.0	0.0	0.0	0.0	0.0
	T	1.08E-05	3.01E-07	7.95E-06	1.64E-06	1.79E-06	6.64E-07	4.56E-06	1.32E-05	6.36E-05	6.36E-05	8.94E-05
UTERUS	G	1.05E-04	1.04E-03	5.59E-05	6.26E-04	3.29E-04	4.58E-04	6.70E-05	2.72E-05	6.28E-06	6.28E-06	1.56E-04
	B	0.0	0.0	0.0	0.0	0.0	0.0	0.0	0.0	0.0	0.0	0.0
	T	1.05E-04	1.04E-03	5.59E-05	6.26E-04	3.29E-04	4.58E-04	6.70E-05	2.72E-05	6.28E-06	6.28E-06	1.56E-04
T BODY	G	1.16E-04	1.30E-04	1.23E-04	1.38E-04	1.34E-04	1.33E-04	1.17E-04	1.18E-04	1.02E-04	1.02E-04	9.55E-05
	B	1.06E-05	1.19E-06	3.17E-06	8.46E-06	5.05E-06	6.27E-06	1.06E-05	1.06E-05	1.06E-05	1.06E-05	1.06E-05
	T	1.27E-04	1.31E-04	1.26E-04	1.46E-04	1.39E-04	1.40E-04	1.27E-04	1.28E-04	1.12E-04	1.12E-04	1.06E-04

CONTINUED NEXT PAGE

34-SELENIUM-75 CONTINUED

SOURCE ORGANS

TARGET ORGANS		OVARIES	PANCREAS	COR BONE	CAN BONE	R MARROW	Y MARROW	SKIN	SPLEEN	TESTES	THYROID	T BODY
ADRENALS	G	2.79E-05	5.82E-04	8.79E-05	8.79E-05	1.61E-04	8.73E-05	5.10E-05	4.28E-04	3.21E-06	1.08E-05	1.33E-04
	B	0.0	0.0	0.0	0.0	0.0	0.0	0.0	0.0	0.0	0.0	1.06E-05
	T	2.79E-05	5.82E-04	8.79E-05	8.79E-05	1.61E-04	8.73E-05	5.10E-05	4.28E-04	3.21E-06	1.08E-05	1.43E-04
BLAD WALL	G	4.69E-04	1.09E-05	3.56E-05	3.56E-05	5.53E-05	2.42E-05	3.65E-05	9.98E-06	3.28E-04	3.04E-07	1.21E-04
	B	0.0	0.0	0.0	0.0	0.0	0.0	0.0	0.0	0.0	0.0	1.06E-05
	T	4.69E-04	1.09E-05	3.56E-05	3.56E-05	5.53E-05	2.42E-05	3.65E-05	9.98E-06	3.28E-04	3.04E-07	1.31E-04
GI TRACT S WALL	G	5.47E-05	1.21E-03	3.89E-05	3.89E-05	7.03E-05	5.14E-05	3.86E-05	6.57E-04	3.93E-06	4.14E-06	1.25E-04
	B	0.0	0.0	0.0	0.0	0.0	0.0	0.0	0.0	0.0	0.0	1.06E-05
	T	5.47E-05	1.21E-03	3.89E-05	3.89E-05	7.03E-05	5.14E-05	3.86E-05	6.57E-04	3.93E-06	4.14E-06	1.36E-04
SI+CONT	G	8.04E-04	1.24E-04	5.17E-05	5.17E-05	1.77E-04	7.19E-05	3.31E-05	9.58E-05	2.88E-05	8.19E-07	1.37E-04
	B	0.0	0.0	0.0	0.0	0.0	0.0	0.0	0.0	0.0	0.0	1.06E-05
	T	8.04E-04	1.24E-04	5.17E-05	5.17E-05	1.77E-04	7.19E-05	3.31E-05	9.58E-05	2.88E-05	8.19E-07	1.48E-04
ULI WALL	G	7.53E-04	1.48E-04	4.88E-05	4.88E-05	1.42E-04	6.29E-05	3.32E-05	8.99E-05	2.31E-05	7.49E-07	1.28E-04
	B	0.0	0.0	0.0	0.0	0.0	0.0	0.0	0.0	0.0	0.0	1.06E-05
	T	7.53E-04	1.48E-04	4.88E-05	4.88E-05	1.42E-04	6.29E-05	3.32E-05	8.99E-05	2.31E-05	7.49E-07	1.39E-04
LLI WALL	G	9.69E-04	3.83E-05	7.00E-05	7.00E-05	1.99E-04	6.05E-05	3.49E-05	4.35E-05	1.88E-04	5.45E-07	1.22E-04
	B	0.0	0.0	0.0	0.0	0.0	0.0	0.0	0.0	0.0	0.0	1.06E-05
	T	9.69E-04	3.83E-05	7.00E-05	7.00E-05	1.99E-04	6.05E-05	3.49E-05	4.35E-05	1.88E-04	5.45E-07	1.32E-04
KIDNEYS	G	6.72E-05	4.33E-04	6.02E-05	6.02E-05	1.53E-04	7.55E-05	4.37E-05	5.99E-04	4.17E-06	2.68E-06	1.18E-04
	B	0.0	0.0	0.0	0.0	0.0	0.0	0.0	0.0	0.0	0.0	1.06E-05
	T	6.72E-05	4.33E-04	6.02E-05	6.02E-05	1.53E-04	7.55E-05	4.37E-05	5.99E-04	4.17E-06	2.68E-06	1.29E-04
LIVER	G	3.92E-05	2.93E-04	4.56E-05	4.56E-05	6.59E-05	6.85E-05	3.93E-05	6.94E-05	2.73E-06	8.13E-06	1.15E-04
	B	0.0	0.0	0.0	0.0	0.0	0.0	0.0	0.0	0.0	0.0	1.06E-05
	T	3.92E-05	2.93E-04	4.56E-05	4.56E-05	6.59E-05	6.85E-05	3.93E-05	6.94E-05	2.73E-06	8.13E-06	1.26E-04
LUNGS	G	5.19E-06	1.69E-04	6.57E-05	6.57E-05	8.11E-05	6.60E-05	4.26E-05	1.51E-04	7.40E-07	6.57E-05	1.00E-04
	B	0.0	0.0	0.0	0.0	0.0	0.0	0.0	0.0	0.0	0.0	1.06E-05
	T	5.19E-06	1.69E-04	6.57E-05	6.57E-05	8.11E-05	6.60E-05	4.26E-05	1.51E-04	7.40E-07	6.57E-05	1.11E-04
RESP LYM NODE	G	5.19E-06	1.69E-04	6.57E-05	6.57E-05	8.11E-05	6.60E-05	4.26E-05	1.51E-04	7.40E-07	6.57E-05	1.00E-04
	B	0.0	0.0	0.0	0.0	0.0	0.0	0.0	0.0	0.0	0.0	1.06E-05
	T	5.19E-06	1.69E-04	6.57E-05	6.57E-05	8.11E-05	6.60E-05	4.26E-05	1.51E-04	7.40E-07	6.57E-05	1.11E-04
MUSCLE*	G	1.34E-04	1.21E-04	7.04E-05	7.04E-05	8.43E-05	6.35E-05	5.40E-05	9.79E-05	7.88E-05	8.94E-05	9.55E-05
	B	0.0	0.0	0.0	0.0	0.0	0.0	0.0	0.0	0.0	0.0	1.06E-05
	T	1.34E-04	1.21E-04	7.04E-05	7.04E-05	8.43E-05	6.35E-05	5.40E-05	9.79E-05	7.88E-05	8.94E-05	1.06E-04
OVARIES	G	7.35E-02	2.42E-05	5.29E-05	5.29E-05	1.91E-04	9.05E-05	2.82E-05	4.24E-05	4.33E-48	6.36E-07	1.26E-04
	B	6.73E-02	0.0	0.0	0.0	0.0	0.0	0.0	0.0	0.0	0.0	1.06E-05
	T	1.41E-01	2.42E-05	5.29E-05	5.29E-05	1.91E-04	9.05E-05	2.82E-05	4.24E-05	4.33E-48	6.36E-07	1.37E-04

34-SELENIUM-75 CONTINUED

SOURCE ORGANS

TARGET ORGANS		OVARIES	PANCREAS	COR BONE	CAN BONE	R MARROW	Y MARROW	SKIN	SPLEEN	TESTES	THYROID	T BODY
PANCREAS	G	3.45E-05	1.72E-02	6.63E-05	6.63E-05	1.13E-04	8.59E-05	3.64E-05	1.27E-03	4.17E-06	6.08E-06	1.38E-04
	B	0.0	7.40E-03	0.0	0.0	0.0	0.0	0.0	0.0	0.0	0.0	1.06E-05
	T	3.45E-05	2.46E-02	6.63E-05	6.63E-05	1.13E-04	8.59E-05	3.64E-05	1.27E-03	4.17E-06	6.08E-06	1.48E-04
SKELETON BONE	G	8.37E-05	8.03E-05	2.84E-04	2.84E-04	1.89E-04	2.09E-04	6.07E-05	6.46E-05	5.37E-05	5.93E-05	1.16E-04
	B	0.0	0.0	1.48E-04	1.28E-04	1.34E-05	0.0	0.0	0.0	0.0	0.0	1.06E-05
	T	8.37E-05	8.03E-05	4.32E-04	4.12E-04	2.02E-04	2.09E-04	6.07E-05	6.46E-05	5.37E-05	5.93E-05	1.26E-04
R MARROW	G	2.90E-04	1.54E-04	2.57E-04	2.57E-04	6.22E-04	2.17E-04	5.76E-05	9.80E-05	4.33E-05	6.52E-05	1.36E-04
	B	0.0	0.0	8.53E-07	6.68E-05	4.49E-04	0.0	0.0	0.0	0.0	0.0	1.06E-05
	T	2.90E-04	1.54E-04	2.58E-04	3.24E-04	1.07E-03	2.17E-04	5.76E-05	9.80E-05	4.33E-05	6.52E-05	1.47E-04
Y MARROW	G	1.12E-04	9.35E-05	2.47E-04	2.47E-04	2.38E-04	3.60E-04	6.35E-05	9.62E-05	2.09E-05	3.09E-05	1.11E-04
	B	0.0	0.0	0.0	0.0	0.0	4.94E-04	0.0	0.0	0.0	0.0	1.06E-05
	T	1.12E-04	9.35E-05	2.47E-04	2.47E-04	2.38E-04	8.54E-04	6.35E-05	9.62E-05	2.09E-05	3.09E-05	1.22E-04
T E CL	G	8.37E-05	8.03E-05	2.84E-04	2.84E-04	2.58E-04	2.32E-04	6.07E-05	6.46E-05	5.37E-05	5.93E-05	1.19E-04
	B	0.0	0.0	5.10E-05	1.01E-04	1.79E-04	1.23E-04	0.0	0.0	0.0	0.0	1.06E-05
	T	8.37E-05	8.03E-05	3.35E-04	3.85E-04	4.37E-04	3.55E-04	6.07E-05	6.46E-05	5.37E-05	5.93E-05	1.30E-04
SKIN	G	3.10E-05	3.00E-05	5.02E-05	5.02E-05	4.52E-05	5.59E-05	1.72E-04	3.53E-05	9.80E-05	5.37E-05	5.68E-05
	B	0.0	0.0	0.0	0.0	0.0	0.0	2.85E-04	0.0	0.0	0.0	1.06E-05
	T	3.10E-05	3.00E-05	5.02E-05	5.02E-05	4.52E-05	5.59E-05	4.56E-04	3.53E-05	9.80E-05	5.37E-05	6.73E-05
SPLEEN	G	3.83E-05	1.29E-03	4.55E-05	4.55E-05	6.09E-05	7.04E-05	3.96E-05	9.74E-03	2.96E-06	7.99E-06	1.22E-04
	B	0.0	0.0	0.0	0.0	0.0	0.0	0.0	4.11E-03	0.0	0.0	1.06E-05
	T	3.83E-05	1.29E-03	4.55E-05	4.55E-05	6.09E-05	7.04E-05	3.96E-05	1.39E-02	2.96E-06	7.99E-06	1.32E-04
TESTES	G	4.33E-48	4.55E-06	4.20E-05	4.20E-05	2.55E-05	7.21E-05	6.55E-05	4.61E-06	2.89E-02	9.15E-08	8.94E-05
	B	0.0	0.0	0.0	0.0	0.0	0.0	0.0	0.0	2.12E-02	0.0	1.06E-05
	T	4.33E-48	4.55E-06	4.20E-05	4.20E-05	2.55E-05	7.21E-05	6.55E-05	4.61E-06	5.00E-02	9.15E-08	1.00E-04
THYMUS	G	2.70E-06	4.79E-05	3.70E-05	3.70E-05	4.92E-05	4.47E-05	4.79E-05	2.51E-05	3.60E-07	2.90E-04	1.40E-04
	B	0.0	0.0	0.0	0.0	0.0	0.0	0.0	0.0	0.0	0.0	1.06E-05
	T	2.70E-06	4.79E-05	3.70E-05	3.70E-05	4.92E-05	4.47E-05	4.79E-05	2.51E-05	3.60E-07	2.90E-04	1.50E-04
THYROID	G	6.37E-07	1.02E-05	6.27E-05	6.27E-05	5.09E-05	7.19E-05	5.16E-05	7.72E-06	9.16E-08	4.14E-02	8.55E-05
	B	0.0	0.0	0.0	0.0	0.0	0.0	0.0	0.0	0.0	3.70E-02	1.06E-05
	T	6.37E-07	1.02E-05	6.27E-05	6.27E-05	5.09E-05	7.19E-05	5.16E-05	7.72E-06	9.16E-08	7.84E-02	9.61E-05
UTERUS	G	1.37E-03	4.11E-05	4.05E-05	4.05E-05	1.49E-04	4.41E-05	2.92E-05	2.80E-05	4.33E-48	5.97E-07	1.41E-04
	B	0.0	0.0	0.0	0.0	0.0	0.0	0.0	0.0	0.0	0.0	1.06E-05
	T	1.37E-03	4.11E-05	4.05E-05	4.05E-05	1.49E-04	4.41E-05	2.92E-05	2.80E-05	4.33E-48	5.97E-07	1.51E-04
T BODY	G	1.41E-04	1.38E-04	1.00E-04	1.00E-04	1.11E-04	8.79E-05	5.77E-05	1.17E-04	9.59E-05	8.86E-05	9.88E-05
	B	1.06E-05	1.06E-05	1.06E-05	1.06E-05	1.06E-05	1.06E-05	1.06E-05	1.06E-05	1.06E-05	1.06E-05	1.06E-05
	T	1.51E-04	1.48E-04	1.11E-04	1.11E-04	1.22E-04	9.84E-05	6.83E-05	1.28E-04	1.06E-04	9.92E-05	1.09E-04

*"MUSCLE" VALUES MAY BE USED FOR "SEPARABLE FAT" WITH ADJUSTMENT (SEE TEXT)
PRINCIPLE REFERENCE-PARADELLIS, TH. AND MONTZEAS, S., CAN. J. PHYS. 48 2256 (1970)
DATE DECAY DATA REVIEWED-OCTOBER 1971

S, AVERAGE DOSE EQUIVALENT PER UNIT ACCUMULATED ACTIVITY (REM/UCI-DAY), FOR 35-BROMINE-82 (TR=3.534E 01 HOURS)

DATE OF TABLE 11-27-74

TARGET ORGANS		SOURCE ORGANS										
		ADRENALS	BLAD CON	S CONT	SI+CONT	ULI CONT	LLI CONT	KIDNEYS	LIVER	LUNG	RESP LYM NODE	MUSCLE*
ADRENALS	G	2.04E-01	1.11E-04	1.07E-03	5.41E-04	5.09E-04	2.23E-04	5.46E-03	2.13E-03	1.04E-03	1.04E-03	6.83E-04
	B	5.19E-01	0.0	0.0	0.0	0.0	0.0	0.0	0.0	0.0	0.0	0.0
	T	7.23E-01	1.11E-04	1.07E-03	5.41E-04	5.09E-04	2.23E-04	5.46E-03	2.13E-03	1.04E-03	1.04E-03	6.83E-04
BLAD WALL	G	9.03E-05	3.15E-02	2.15E-04	1.27E-03	8.77E-04	2.46E-03	1.97E-04	1.17E-04	3.94E-05	3.94E-05	7.88E-04
	B	0.0	1.82E-02	0.0	0.0	0.0	0.0	0.0	0.0	0.0	0.0	0.0
	T	9.03E-05	4.97E-02	2.15E-04	1.27E-03	8.77E-04	2.46E-03	1.97E-04	1.17E-04	3.94E-05	3.94E-05	7.88E-04
GI TRACT S WALL	G	1.30E-03	1.98E-04	2.27E-02	1.54E-03	1.56E-03	7.35E-04	1.44E-03	8.64E-04	8.52E-04	8.52E-04	6.30E-04
	B	0.0	0.0	1.45E-02	0.0	0.0	0.0	0.0	0.0	0.0	0.0	0.0
	T	1.30E-03	1.98E-04	3.72E-02	1.54E-03	1.56E-03	7.35E-04	1.44E-03	8.64E-04	8.52E-04	8.52E-04	6.30E-04
SI+CONT	G	4.39E-04	1.19E-03	1.13E-03	1.34E-02	7.01E-03	3.92E-03	1.24E-03	7.12E-04	1.39E-04	1.39E-04	6.88E-04
	B	0.0	0.0	0.0	9.08E-03	0.0	0.0	0.0	0.0	0.0	0.0	0.0
	T	4.39E-04	1.19E-03	1.13E-03	2.25E-02	7.01E-03	3.92E-03	1.24E-03	7.12E-04	1.39E-04	1.39E-04	6.88E-04
ULI WALL	G	4.80E-04	9.42E-04	1.44E-03	9.97E-03	1.89E-02	1.82E-03	1.28E-03	1.08E-03	1.85E-04	1.85E-04	7.27E-04
	B	0.0	0.0	0.0	0.0	1.65E-02	0.0	0.0	0.0	0.0	0.0	0.0
	T	4.80E-04	9.42E-04	1.44E-03	9.97E-03	3.54E-02	1.82E-03	1.28E-03	1.08E-03	1.85E-04	1.85E-04	7.27E-04
LLI WALL	G	1.43E-04	3.03E-03	6.03E-04	2.99E-03	1.38E-03	2.25E-02	4.07E-04	1.41E-04	3.83E-05	3.83E-05	7.53E-04
	B	0.0	0.0	0.0	0.0	0.0	2.69E-02	0.0	0.0	0.0	0.0	0.0
	T	1.43E-04	3.03E-03	6.03E-04	2.99E-03	1.38E-03	4.94E-02	4.07E-04	1.41E-04	3.83E-05	3.83E-05	7.53E-04
KIDNEYS	G	4.93E-03	1.79E-04	1.45E-03	1.39E-03	1.25E-03	4.02E-04	3.17E-02	1.65E-03	4.65E-04	4.65E-04	6.43E-04
	B	0.0	0.0	0.0	0.0	0.0	0.0	2.34E-02	0.0	0.0	0.0	0.0
	T	4.93E-03	1.79E-04	1.45E-03	1.39E-03	1.25E-03	4.02E-04	5.51E-02	1.65E-03	4.65E-04	4.65E-04	6.43E-04
LIVER	G	2.12E-03	1.34E-04	8.90E-04	8.21E-04	1.11E-03	1.74E-04	1.72E-03	1.12E-02	1.06E-03	1.06E-03	5.02E-04
	B	0.0	0.0	0.0	0.0	0.0	0.0	0.0	4.04E-03	0.0	0.0	0.0
	T	2.12E-03	1.34E-04	8.90E-04	8.21E-04	1.11E-03	1.74E-04	1.72E-03	1.52E-02	1.06E-03	1.06E-03	5.02E-04
LUNGS	G	1.05E-03	3.25E-05	8.05E-04	1.55E-04	1.77E-04	6.37E-05	4.37E-04	1.08E-03	6.34E-03	6.34E-03	5.93E-04
	B	0.0	0.0	0.0	0.0	0.0	0.0	0.0	0.0	7.27E-03	7.27E-03	0.0
	T	1.05E-03	3.25E-05	8.05E-04	1.55E-04	1.77E-04	6.37E-05	4.37E-04	1.08E-03	1.36E-02	1.36E-02	5.93E-04
RESP LYM NODE	G	1.05E-03	3.25E-05	8.05E-04	1.55E-04	1.77E-04	6.37E-05	4.37E-04	1.08E-03	6.34E-03	6.34E-03	5.93E-04
	B	0.0	0.0	0.0	0.0	0.0	0.0	0.0	0.0	7.26E-03	4.84E-01	0.0
	T	1.05E-03	3.25E-05	8.05E-04	1.55E-04	1.77E-04	6.37E-05	4.37E-04	1.08E-03	1.36E-02	4.91E-01	5.93E-04
MUSCLE*	G	6.83E-04	7.88E-04	6.30E-04	6.88E-04	6.59E-04	7.53E-04	6.43E-04	5.02E-04	5.93E-04	5.93E-04	6.79E-04
	B	0.0	0.0	0.0	0.0	0.0	0.0	0.0	0.0	0.0	0.0	2.59E-04
	T	6.83E-04	7.88E-04	6.30E-04	6.88E-04	6.59E-04	7.53E-04	6.43E-04	5.02E-04	5.93E-04	5.93E-04	9.38E-04
OVARIES	G	2.13E-04	2.49E-03	4.59E-04	4.13E-03	4.13E-03	7.30E-03	6.19E-04	2.62E-04	7.54E-05	7.54E-05	8.80E-04
	B	0.0	0.0	0.0	0.0	0.0	0.0	0.0	0.0	0.0	0.0	0.0
	T	2.13E-04	2.49E-03	4.59E-04	4.13E-03	4.13E-03	7.30E-03	6.19E-04	2.62E-04	7.54E-05	7.54E-05	8.80E-04

35-BROMINE-82 CONTINUED

TARGET ORGANS		SOURCE ORGANS										
		ADRENALS	BLAD CON	S CONT	SI+CONT	ULI CONT	LLI CONT	KIDNEYS	LIVER	LUNG	RESP LYM NODE	MUSCLE*
PANCREAS	G	3.80E-03	1.25E-04	7.46E-03	8.85E-04	8.77E-04	3.26E-04	2.97E-03	1.96E-03	1.10E-03	1.10E-03	7.92E-04
	B	0.0	0.0	0.0	0.0	0.0	0.0	0.0	0.0	0.0	0.0	0.0
	T	3.80E-03	1.25E-04	7.46E-03	8.85E-04	8.77E-04	3.26E-04	2.97E-03	1.96E-03	1.10E-03	1.10E-03	7.92E-04
SKELETON BONE	G	6.01E-04	2.53E-04	2.64E-04	3.48E-04	3.13E-04	4.53E-04	4.33E-04	3.23E-04	4.38E-04	4.38E-04	5.01E-04
	B	0.0	0.0	0.0	0.0	0.0	0.0	0.0	0.0	0.0	0.0	0.0
	T	6.01E-04	2.53E-04	2.64E-04	3.48E-04	3.13E-04	4.53E-04	4.33E-04	3.23E-04	4.38E-04	4.38E-04	5.01E-04
R MARROW	G	1.07E-03	5.32E-04	4.48E-04	1.08E-03	9.17E-04	1.35E-03	1.09E-03	4.64E-04	5.54E-04	5.54E-04	5.94E-04
	B	0.0	0.0	0.0	0.0	0.0	0.0	0.0	0.0	0.0	0.0	0.0
	T	1.07E-03	5.32E-04	4.48E-04	1.08E-03	9.17E-04	1.35E-03	1.09E-03	4.64E-04	5.54E-04	5.54E-04	5.94E-04
Y MARROW	G	5.84E-04	2.33E-04	3.68E-04	4.79E-04	4.44E-04	5.59E-04	5.36E-04	4.78E-04	4.59E-04	4.59E-04	4.86E-04
	B	0.0	0.0	0.0	0.0	0.0	0.0	0.0	0.0	0.0	0.0	0.0
	T	5.84E-04	2.33E-04	3.68E-04	4.79E-04	4.44E-04	5.59E-04	5.36E-04	4.78E-04	4.59E-04	4.59E-04	4.86E-04
T E CL	G	6.01E-04	2.53E-04	2.64E-04	3.48E-04	3.13E-04	4.53E-04	4.33E-04	3.23E-04	4.38E-04	4.38E-04	5.01E-04
	B	0.0	0.0	0.0	0.0	0.0	0.0	0.0	0.0	0.0	0.0	0.0
	T	6.01E-04	2.53E-04	2.64E-04	3.48E-04	3.13E-04	4.53E-04	4.33E-04	3.23E-04	4.38E-04	4.38E-04	5.01E-04
SKIN	G	3.25E-04	3.09E-04	2.76E-04	2.57E-04	2.55E-04	2.80E-04	3.03E-04	2.80E-04	3.12E-04	3.12E-04	4.21E-04
	B	0.0	0.0	0.0	0.0	0.0	0.0	0.0	0.0	0.0	0.0	0.0
	T	3.25E-04	3.09E-04	2.76E-04	2.57E-04	2.55E-04	2.80E-04	3.03E-04	2.80E-04	3.12E-04	3.12E-04	4.21E-04
SPLEEN	G	2.72E-03	1.07E-04	4.18E-03	7.08E-04	6.02E-04	4.52E-04	3.67E-03	4.76E-04	9.35E-04	9.35E-04	6.57E-04
	B	0.0	0.0	0.0	0.0	0.0	0.0	0.0	0.0	0.0	0.0	0.0
	T	2.72E-03	1.07E-04	4.18E-03	7.08E-04	6.02E-04	4.52E-04	3.67E-03	4.76E-04	9.35E-04	9.35E-04	6.57E-04
TESTES	G	3.83E-05	2.15E-03	5.19E-05	2.16E-04	2.37E-04	7.78E-04	7.52E-05	8.31E-05	1.49E-05	1.49E-05	5.60E-04
	B	0.0	0.0	0.0	0.0	0.0	0.0	0.0	0.0	0.0	0.0	0.0
	T	3.83E-05	2.15E-03	5.19E-05	2.16E-04	2.37E-04	7.78E-04	7.52E-05	8.31E-05	1.49E-05	1.49E-05	5.60E-04
THYMUS	G	3.39E-04	1.90E-05	2.63E-04	7.00E-05	7.59E-05	3.18E-05	1.16E-04	4.44E-04	1.79E-03	1.79E-03	7.34E-04
	B	0.0	0.0	0.0	0.0	0.0	0.0	0.0	0.0	0.0	0.0	0.0
	T	3.39E-04	1.90E-05	2.63E-04	7.00E-05	7.59E-05	3.18E-05	1.16E-04	4.44E-04	1.79E-03	1.79E-03	7.34E-04
THYROID	G	9.90E-05	6.77E-06	7.59E-05	2.30E-05	2.44E-05	1.14E-05	4.96E-05	8.99E-05	5.57E-04	5.57E-04	6.12E-04
	B	0.0	0.0	0.0	0.0	0.0	0.0	0.0	0.0	0.0	0.0	0.0
	T	9.90E-05	6.77E-06	7.59E-05	2.30E-05	2.44E-05	1.14E-05	4.96E-05	8.99E-05	5.57E-04	5.57E-04	6.12E-04
UTERUS	G	2.11E-04	6.40E-03	4.29E-04	3.75E-03	2.08E-03	2.49E-03	4.02E-04	2.04E-04	6.29E-05	6.29E-05	9.94E-04
	B	0.0	0.0	0.0	0.0	0.0	0.0	0.0	0.0	0.0	0.0	0.0
	T	2.11E-04	6.40E-03	4.29E-04	3.75E-03	2.08E-03	2.49E-03	4.02E-04	2.04E-04	6.29E-05	6.29E-05	9.94E-04
T BODY	G	7.48E-04	8.25E-04	7.88E-04	8.65E-04	8.46E-04	8.40E-04	7.54E-04	7.55E-04	6.41E-04	6.41E-04	6.47E-04
	B	1.04E-04	1.17E-05	3.11E-05	8.30E-05	4.95E-05	6.15E-05	1.04E-04	1.04E-04	1.04E-04	1.04E-04	1.04E-04
	T	8.52E-04	8.37E-04	8.19E-04	9.48E-04	8.96E-04	9.02E-04	8.58E-04	8.58E-04	7.45E-04	7.45E-04	7.51E-04

CONTINUED NEXT PAGE

35-BROMINE-82 CONTINUED

TARGET ORGANS		SOURCE ORGANS										
		OVARIES	PANCREAS	COR BONE	CAN BONE	R MARROW	Y MARROW	SKIN	SPLEEN	TESTES	THYROID	T BODY
ADRENALS	G	2.60E-04	3.37E-03	8.23E-04	8.23E-04	1.06E-03	3.94E-04	3.51E-04	2.94E-03	3.83E-05	9.66E-05	9.87E-04
	B	0.0	0.0	0.0	0.0	0.0	0.0	0.0	0.0	0.0	0.0	1.04E-04
	T	2.60E-04	3.37E-03	8.23E-04	8.23E-04	1.06E-03	3.94E-04	3.51E-04	2.94E-03	3.83E-05	9.66E-05	1.09E-03
BLAD WALL	G	3.04E-03	8.39E-05	2.61E-04	2.61E-04	4.34E-04	1.43E-04	3.33E-04	1.19E-04	2.27E-03	6.81E-06	8.61E-04
	B	0.0	0.0	0.0	0.0	0.0	0.0	0.0	0.0	0.0	0.0	1.04E-04
	T	3.04E-03	8.39E-05	2.61E-04	2.61E-04	4.34E-04	1.43E-04	3.33E-04	1.19E-04	2.27E-03	6.81E-06	9.65E-04
GI TRACT S WALL	G	3.76E-04	7.44E-03	2.56E-04	2.56E-04	4.98E-04	3.37E-04	2.97E-04	4.25E-03	4.68E-05	6.54E-05	7.45E-04
	B	0.0	0.0	0.0	0.0	0.0	0.0	0.0	0.0	0.0	0.0	1.04E-04
	T	3.76E-04	7.44E-03	2.56E-04	2.56E-04	4.98E-04	3.37E-04	2.97E-04	4.25E-03	4.68E-05	6.54E-05	8.49E-04
SI+CONT	G	5.04E-03	8.01E-04	3.66E-04	3.66E-04	1.16E-03	4.64E-04	2.64E-04	6.31E-04	2.44E-04	1.39E-05	8.69E-04
	B	0.0	0.0	0.0	0.0	0.0	0.0	0.0	0.0	0.0	0.0	1.04E-04
	T	5.04E-03	8.01E-04	3.66E-04	3.66E-04	1.16E-03	4.64E-04	2.64E-04	6.31E-04	2.44E-04	1.39E-05	9.73E-04
ULI WALL	G	4.75E-03	9.75E-04	3.36E-04	3.36E-04	8.71E-04	3.98E-04	2.80E-04	6.33E-04	1.68E-04	1.62E-05	8.37E-04
	B	0.0	0.0	0.0	0.0	0.0	0.0	0.0	0.0	0.0	0.0	1.04E-04
	T	4.75E-03	9.75E-04	3.36E-04	3.36E-04	8.71E-04	3.98E-04	2.80E-04	6.33E-04	1.68E-04	1.62E-05	9.40E-04
LLI WALL	G	6.03E-03	2.61E-04	4.54E-04	4.54E-04	1.33E-03	3.81E-04	2.87E-04	2.98E-04	1.13E-03	9.82E-06	8.75E-04
	B	0.0	0.0	0.0	0.0	0.0	0.0	0.0	0.0	0.0	0.0	1.04E-04
	T	6.03E-03	2.61E-04	4.54E-04	4.54E-04	1.33E-03	3.81E-04	2.87E-04	2.98E-04	1.13E-03	9.82E-06	9.79E-04
KIDNEYS	G	4.99E-04	2.70E-03	4.76E-04	4.76E-04	1.07E-03	5.33E-04	3.46E-04	3.67E-03	6.14E-05	4.71E-05	7.84E-04
	B	0.0	0.0	0.0	0.0	0.0	0.0	0.0	0.0	0.0	0.0	1.04E-04
	T	4.99E-04	2.70E-03	4.76E-04	4.76E-04	1.07E-03	5.33E-04	3.46E-04	3.67E-03	6.14E-05	4.71E-05	8.87E-04
LIVER	G	2.90E-04	1.79E-03	3.25E-04	3.25E-04	4.58E-04	4.97E-04	3.07E-04	4.85E-04	4.03E-05	8.45E-05	7.83E-04
	B	0.0	0.0	0.0	0.0	0.0	0.0	0.0	0.0	0.0	0.0	1.04E-04
	T	2.90E-04	1.79E-03	3.25E-04	3.25E-04	4.58E-04	4.97E-04	3.07E-04	4.85E-04	4.03E-05	8.45E-05	8.87E-04
LUNGS	G	6.54E-05	1.03E-03	4.44E-04	4.44E-04	5.48E-04	4.60E-04	3.18E-04	9.51E-04	1.23E-05	4.98E-04	6.48E-04
	B	0.0	0.0	0.0	0.0	0.0	0.0	0.0	0.0	0.0	0.0	1.04E-04
	T	6.54E-05	1.03E-03	4.44E-04	4.44E-04	5.48E-04	4.60E-04	3.18E-04	9.51E-04	1.23E-05	4.98E-04	7.52E-04
RESP LYM NODE	G	6.54E-05	1.03E-03	4.44E-04	4.44E-04	5.48E-04	4.60E-04	3.18E-04	9.51E-04	1.23E-05	4.98E-04	6.48E-04
	B	0.0	0.0	0.0	0.0	0.0	0.0	0.0	0.0	0.0	0.0	1.04E-04
	T	6.54E-05	1.03E-03	4.44E-04	4.44E-04	5.48E-04	4.60E-04	3.18E-04	9.51E-04	1.23E-05	4.98E-04	7.52E-04
MUSCLE*	G	8.80E-04	7.92E-04	5.01E-04	5.01E-04	5.87E-04	4.63E-04	4.21E-04	6.57E-04	5.60E-04	6.12E-04	6.47E-04
	B	0.0	0.0	0.0	0.0	0.0	0.0	0.0	0.0	0.0	0.0	1.04E-04
	T	8.80E-04	7.92E-04	5.01E-04	5.01E-04	5.87E-04	4.63E-04	4.21E-04	6.57E-04	5.60E-04	6.12E-04	7.51E-04
OVARIES	G	3.34E-01	3.29E-04	4.48E-04	4.48E-04	1.42E-03	4.08E-04	2.20E-04	3.45E-04	7.64E-50	1.17E-05	7.11E-04
	B	6.61E-01	0.0	0.0	0.0	0.0	0.0	0.0	0.0	0.0	0.0	1.04E-04
	T	9.95E-01	3.29E-04	4.48E-04	4.48E-04	1.42E-03	4.08E-04	2.20E-04	3.45E-04	7.64E-50	1.17E-05	8.15E-04

35-BROMINE-82 CONTINUED

TARGET ORGANS		SOURCE ORGANS										
		OVARIES	PANCREAS	COR BONE	CAN BONE	R MARROW	Y MARROW	SKIN	SPLEEN	TESTES	THYROID	T BODY
PANCREAS	G	3.28E-04	9.31E-02	4.46E-04	4.46E-04	6.23E-04	5.13E-04	2.45E-04	8.17E-03	3.88E-05	5.85E-05	7.45E-04
	B	0.0	7.27E-02	0.0	0.0	0.0	0.0	0.0	0.0	0.0	0.0	1.04E-04
	T	3.28E-04	1.66E-01	4.46E-04	4.46E-04	6.23E-04	5.13E-04	2.45E-04	8.17E-03	3.88E-05	5.85E-05	8.49E-04
SKELETON BONE	G	4.02E-04	4.03E-04	1.52E-03	1.52E-03	1.02E-03	1.13E-03	3.87E-04	3.43E-04	2.95E-04	3.34E-04	6.52E-04
	B	0.0	0.0	1.45E-03	1.07E-03	2.56E-04	0.0	0.0	0.0	0.0	0.0	1.04E-04
	T	4.02E-04	4.03E-04	2.98E-03	2.59E-03	1.27E-03	1.13E-03	3.87E-04	3.43E-04	2.95E-04	3.34E-04	7.56E-04
R MARROW	G	1.32E-03	7.53E-04	1.37E-03	1.37E-03	3.23E-03	1.17E-03	3.60E-04	5.01E-04	2.32E-04	3.65E-04	7.17E-04
	B	0.0	0.0	1.67E-05	1.28E-03	3.99E-03	0.0	0.0	0.0	0.0	0.0	1.04E-04
	T	1.32E-03	7.53E-04	1.39E-03	2.65E-03	7.22E-03	1.17E-03	3.60E-04	5.01E-04	2.32E-04	3.65E-04	8.21E-04
Y MARROW	G	5.33E-04	4.74E-04	1.32E-03	1.32E-03	1.25E-03	1.92E-03	4.10E-04	5.11E-04	1.29E-04	1.81E-04	6.08E-04
	B	0.0	0.0	0.0	0.0	0.0	4.84E-03	0.0	0.0	0.0	0.0	1.04E-04
	T	5.33E-04	4.74E-04	1.32E-03	1.32E-03	1.25E-03	6.77E-03	4.10E-04	5.11E-04	1.29E-04	1.81E-04	7.12E-04
T E CL	G	4.02E-04	4.03E-04	1.52E-03	1.52E-03	1.37E-03	1.25E-03	3.87E-04	3.43E-04	2.95E-04	3.34E-04	6.52E-04
	B	0.0	0.0	8.62E-04	1.69E-03	1.30E-03	1.21E-03	0.0	0.0	0.0	0.0	1.04E-04
	T	4.02E-04	4.03E-04	2.39E-03	3.21E-03	2.66E-03	2.46E-03	3.87E-04	3.43E-04	2.95E-04	3.34E-04	7.56E-04
SKIN	G	2.49E-04	2.45E-04	3.94E-04	3.94E-04	3.43E-04	4.33E-04	9.24E-04	2.91E-04	7.13E-04	4.07E-04	4.22E-04
	B	0.0	0.0	0.0	0.0	0.0	0.0	2.79E-03	0.0	0.0	0.0	1.04E-04
	T	2.49E-04	2.45E-04	3.94E-04	3.94E-04	3.43E-04	4.33E-04	3.72E-03	2.91E-04	7.13E-04	4.07E-04	5.26E-04
SPLEEN	G	2.86E-04	8.15E-03	3.74E-04	3.74E-04	4.26E-04	4.91E-04	3.21E-04	5.68E-02	4.19E-05	8.04E-05	7.73E-04
	B	0.0	0.0	0.0	0.0	0.0	0.0	0.0	4.04E-02	0.0	0.0	1.04E-04
	T	2.86E-04	8.15E-03	3.74E-04	3.74E-04	4.26E-04	4.91E-04	3.21E-04	9.71E-02	4.19E-05	8.04E-05	8.77E-04
TESTES	G	7.64E-50	4.72E-05	2.93E-04	2.93E-04	1.77E-04	4.20E-04	4.07E-04	4.99E-05	1.57E-01	2.88E-06	7.92E-04
	B	0.0	0.0	0.0	0.0	0.0	0.0	0.0	0.0	2.08E-01	0.0	1.04E-04
	T	7.64E-50	4.72E-05	2.93E-04	2.93E-04	1.77E-04	4.20E-04	4.07E-04	4.99E-05	3.65E-01	2.88E-06	8.95E-04
THYMUS	G	3.36E-05	2.52E-04	3.39E-04	3.39E-04	2.92E-04	2.12E-04	3.46E-04	2.39E-04	7.71E-06	1.84E-03	6.64E-04
	B	0.0	0.0	0.0	0.0	0.0	0.0	0.0	0.0	0.0	0.0	1.04E-04
	T	3.36E-05	2.52E-04	3.39E-04	3.39E-04	2.92E-04	2.12E-04	3.46E-04	2.39E-04	7.71E-06	1.84E-03	7.68E-04
THYROID	G	1.17E-05	5.64E-05	3.87E-04	3.87E-04	4.02E-04	2.40E-04	3.48E-04	7.40E-05	2.88E-06	2.13E-01	6.63E-04
	B	0.0	0.0	0.0	0.0	0.0	0.0	0.0	0.0	0.0	3.63E-01	1.04E-04
	T	1.17E-05	5.64E-05	3.87E-04	3.87E-04	4.02E-04	2.40E-04	3.48E-04	7.40E-05	2.88E-06	5.76E-01	7.67E-04
UTERUS	G	7.56E-03	2.77E-04	3.37E-04	3.37E-04	7.83E-04	2.85E-04	3.04E-04	2.24E-04	7.64E-50	1.11E-05	9.06E-04
	B	0.0	0.0	0.0	0.0	0.0	0.0	0.0	0.0	0.0	0.0	1.04E-04
	T	7.56E-03	2.77E-04	3.37E-04	3.37E-04	7.83E-04	2.85E-04	3.04E-04	2.24E-04	7.64E-50	1.11E-05	1.01E-03
T BODY	G	8.80E-04	8.62E-04	6.42E-04	6.42E-04	7.10E-04	5.73E-04	4.22E-04	7.51E-04	6.41E-04	5.83E-04	6.45E-04
	B	1.04E-04	1.04E-04	1.04E-04	1.04E-04	1.04E-04	1.04E-04	1.04E-04	1.04E-04	1.04E-04	1.04E-04	1.04E-04
	T	9.84E-04	9.65E-04	7.45E-04	7.45E-04	8.14E-04	6.77E-04	5.26E-04	8.55E-04	7.45E-04	6.87E-04	7.48E-04

*"MUSCLE" VALUES MAY BE USED FOR "SEPARABLE FAT" WITH ADJUSTMENT (SEE TEXT)
PRINCIPLE REFERENCE-MEREDITH, G. R., AND MEYER, R. A., NUCL. PHYS. A142, 513 (1970)
DATE DECAY DATA REVIEWED-AUGUST 1973

S, AVERAGE DOSE EQUIVALENT PER UNIT ACCUMULATED ACTIVITY (REM/UCI-DAY), FOR 37-RUBIDIUM-86 (TR=1.866E 01 DAYS)

DATE OF TABLE 11-27-74

TARGET ORGANS		SOURCE ORGANS										
		ADRENALS	BLAD CON	S CONT	SI+CONT	ULI CONT	LLI CONT	KIDNEYS	LIVER	LUNG	RESP LYM NODE	MUSCLE*
ADRENALS	G	7.17E-03	4.05E-06	3.71E-05	1.85E-05	1.96E-05	7.84E-06	1.90E-04	7.39E-05	3.59E-05	3.59E-05	2.39E-05
	B	2.44E 00	0.0	0.0	0.0	0.0	0.0	0.0	0.0	0.0	0.0	0.0
	T	2.45E 00	4.05E-06	3.71E-05	1.85E-05	1.96E-05	7.84E-06	1.90E-04	7.39E-05	3.59E-05	3.59E-05	2.39E-05
BLAD WALL	G	4.16E-06	1.06E-03	7.85E-06	3.57E-05	3.24E-05	8.11E-05	7.57E-06	3.00E-06	1.51E-06	1.51E-06	2.73E-05
	B	0.0	8.54E-02	0.0	0.0	0.0	0.0	0.0	0.0	0.0	0.0	0.0
	T	4.16E-06	8.64E-02	7.85E-06	3.57E-05	3.24E-05	8.11E-05	7.57E-06	3.00E-06	1.51E-06	1.51E-06	2.73E-05
GI TRACT S WALL	G	4.55E-05	8.55E-06	7.84E-04	5.44E-05	5.43E-05	2.38E-05	5.00E-05	3.07E-05	3.04E-05	3.04E-05	2.20E-05
	B	0.0	0.0	6.83E-02	0.0	0.0	0.0	0.0	0.0	0.0	0.0	0.0
	T	4.55E-05	8.55E-06	6.91E-02	5.44E-05	5.43E-05	2.38E-05	5.00E-05	3.07E-05	3.04E-05	3.04E-05	2.20E-05
SI+CONT	G	1.52E-05	4.21E-05	3.88E-05	4.58E-04	2.40E-04	1.36E-04	4.34E-05	2.48E-05	5.19E-06	5.19E-06	2.39E-05
	B	0.0	0.0	0.0	4.27E-02	0.0	0.0	0.0	0.0	0.0	0.0	0.0
	T	1.52E-05	4.21E-05	3.88E-05	4.31E-02	2.40E-04	1.36E-04	4.34E-05	2.48E-05	5.19E-06	5.19E-06	2.39E-05
ULI WALL	G	1.75E-05	2.98E-05	4.79E-05	3.44E-04	6.60E-04	6.12E-05	4.44E-05	3.63E-05	6.71E-06	6.71E-06	2.54E-05
	B	0.0	0.0	0.0	0.0	7.76E-02	0.0	0.0	0.0	0.0	0.0	0.0
	T	1.75E-05	2.98E-05	4.79E-05	3.44E-04	7.83E-02	6.12E-05	4.44E-05	3.63E-05	6.71E-06	6.71E-06	2.54E-05
LLI WALL	G	4.24E-06	1.01E-04	2.18E-05	1.04E-04	5.06E-05	7.73E-04	1.41E-05	4.55E-06	1.47E-06	1.47E-06	2.62E-05
	B	0.0	0.0	0.0	0.0	0.0	1.26E-01	0.0	0.0	0.0	0.0	0.0
	T	4.24E-06	1.01E-04	2.18E-05	1.04E-04	5.06E-05	1.27E-01	1.41E-05	4.55E-06	1.47E-06	1.47E-06	2.62E-05
KIDNEYS	G	1.69E-04	6.02E-06	5.05E-05	4.85E-05	4.47E-05	1.48E-05	1.08E-03	5.67E-05	1.58E-05	1.58E-05	2.25E-05
	B	0.0	0.0	0.0	0.0	0.0	0.0	1.10E-01	0.0	0.0	0.0	0.0
	T	1.69E-04	6.02E-06	5.05E-05	4.85E-05	4.47E-05	1.48E-05	1.11E-01	5.67E-05	1.58E-05	1.58E-05	2.25E-05
LIVER	G	7.21E-05	4.87E-06	3.05E-05	2.91E-05	3.88E-05	6.39E-06	5.85E-05	3.85E-04	3.68E-05	3.68E-05	1.76E-05
	B	0.0	0.0	0.0	0.0	0.0	0.0	0.0	1.90E-02	0.0	0.0	0.0
	T	7.21E-05	4.87E-06	3.05E-05	2.91E-05	3.88E-05	6.39E-06	5.85E-05	1.94E-02	3.68E-05	3.68E-05	1.76E-05
LUNGS	G	3.70E-05	1.38E-06	2.74E-05	5.56E-06	6.71E-06	2.65E-06	1.57E-05	3.80E-05	2.18E-04	2.18E-04	2.06E-05
	B	0.0	0.0	0.0	0.0	0.0	0.0	0.0	0.0	3.42E-02	3.42E-02	0.0
	T	3.70E-05	1.38E-06	2.74E-05	5.56E-06	6.71E-06	2.65E-06	1.57E-05	3.80E-05	3.44E-02	3.44E-02	2.06E-05
RESP LYM NODE	G	3.70E-05	1.38E-06	2.74E-05	5.56E-06	6.71E-06	2.65E-06	1.57E-05	3.80E-05	2.18E-04	2.18E-04	2.06E-05
	B	0.0	0.0	0.0	0.0	0.0	0.0	0.0	0.0	3.42E-02	2.28E 00	0.0
	T	3.70E-05	1.38E-06	2.74E-05	5.56E-06	6.71E-06	2.65E-06	1.57E-05	3.80E-05	3.44E-02	2.28E 00	2.06E-05
MUSCLE*	G	2.39E-05	2.73E-05	2.20E-05	2.39E-05	2.30E-05	2.62E-05	2.25E-05	1.76E-05	2.06E-05	2.06E-05	2.38E-05
	B	0.0	0.0	0.0	0.0	0.0	0.0	0.0	0.0	0.0	0.0	1.22E-03
	T	2.39E-05	2.73E-05	2.20E-05	2.39E-05	2.30E-05	2.62E-05	2.25E-05	1.76E-05	2.06E-05	2.06E-05	1.24E-03
OVARIES	G	7.60E-06	7.23E-05	2.30E-05	1.55E-04	1.08E-04	2.62E-04	2.50E-05	1.27E-05	2.78E-06	2.78E-06	3.06E-05
	B	0.0	0.0	0.0	0.0	0.0	0.0	0.0	0.0	0.0	0.0	0.0
	T	7.60E-06	7.23E-05	2.30E-05	1.55E-04	1.08E-04	2.62E-04	2.50E-05	1.27E-05	2.78E-06	2.78E-06	3.06E-05

37-RUBIDIUM-86 CONTINUED

SOURCE ORGANS

TARGET ORGANS		ADRENALS	BLAD CON	S CONT	SI+CONT	ULI CONT	LLI CONT	KIDNEYS	LIVER	LUNG	RESP LYM NODE	MUSCLE*
PANCREAS	G	1.35E-04	4.68E-06	2.51E-04	3.05E-05	3.26E-05	1.14E-05	1.06E-04	6.43E-05	3.46E-05	3.46E-05	2.73E-05
	B	0.0	0.0	0.0	0.0	0.0	0.0	0.0	0.0	0.0	0.0	0.0
	T	1.35E-04	4.68E-06	2.51E-04	3.05E-05	3.26E-05	1.14E-05	1.06E-04	6.43E-05	3.46E-05	3.46E-05	2.73E-05
SKELETON BONE	G	2.08E-05	8.53E-06	9.03E-06	1.21E-05	1.06E-05	1.55E-05	1.49E-05	1.10E-05	1.51E-05	1.51E-05	1.76E-05
	B	0.0	0.0	0.0	0.0	0.0	0.0	0.0	0.0	0.0	0.0	0.0
	T	2.08E-05	8.53E-06	9.03E-06	1.21E-05	1.06E-05	1.55E-05	1.49E-05	1.10E-05	1.51E-05	1.51E-05	1.76E-05
R MARROW	G	3.67E-05	1.78E-05	1.51E-05	3.70E-05	3.06E-05	4.59E-05	3.72E-05	1.55E-05	1.91E-05	1.91E-05	2.02E-05
	B	0.0	0.0	0.0	0.0	0.0	0.0	0.0	0.0	0.0	0.0	0.0
	T	3.67E-05	1.78E-05	1.51E-05	3.70E-05	3.06E-05	4.59E-05	3.72E-05	1.55E-05	1.91E-05	1.91E-05	2.02E-05
Y MARROW	G	2.03E-05	7.91E-06	1.25E-05	1.65E-05	1.50E-05	1.90E-05	1.84E-05	1.65E-05	1.58E-05	1.58E-05	1.66E-05
	B	0.0	0.0	0.0	0.0	0.0	0.0	0.0	0.0	0.0	0.0	0.0
	T	2.03E-05	7.91E-06	1.25E-05	1.65E-05	1.50E-05	1.90E-05	1.84E-05	1.65E-05	1.58E-05	1.58E-05	1.66E-05
T E CL	G	2.08E-05	8.53E-06	9.03E-06	1.21E-05	1.06E-05	1.55E-05	1.49E-05	1.10E-05	1.51E-05	1.51E-05	1.76E-05
	B	0.0	0.0	0.0	0.0	0.0	0.0	0.0	0.0	0.0	0.0	0.0
	T	2.08E-05	8.53E-06	9.03E-06	1.21E-05	1.06E-05	1.55E-05	1.49E-05	1.10E-05	1.51E-05	1.51E-05	1.76E-05
SKIN	G	1.18E-05	1.12E-05	9.91E-06	9.35E-06	9.00E-06	1.00E-05	1.07E-05	1.00E-05	1.11E-05	1.11E-05	1.51E-05
	B	0.0	0.0	0.0	0.0	0.0	0.0	0.0	0.0	0.0	0.0	0.0
	T	1.18E-05	1.12E-05	9.91E-06	9.35E-06	9.00E-06	1.00E-05	1.07E-05	1.00E-05	1.11E-05	1.11E-05	1.51E-05
SPLEEN	G	9.23E-05	3.97E-06	1.45E-04	2.45E-05	2.21E-05	1.68E-05	1.28E-04	1.78E-05	3.32E-05	3.32E-05	2.29E-05
	B	0.0	0.0	0.0	0.0	0.0	0.0	0.0	0.0	0.0	0.0	0.0
	T	9.23E-05	3.97E-06	1.45E-04	2.45E-05	2.21E-05	1.68E-05	1.28E-04	1.78E-05	3.32E-05	3.32E-05	2.29E-05
TESTES	G	1.48E-06	7.35E-05	2.77E-06	8.75E-06	8.78E-06	2.34E-05	2.79E-06	3.92E-06	6.02E-07	6.02E-07	1.96E-05
	B	0.0	0.0	0.0	0.0	0.0	0.0	0.0	0.0	0.0	0.0	0.0
	T	1.48E-06	7.35E-05	2.77E-06	8.75E-06	8.78E-06	2.34E-05	2.79E-06	3.92E-06	6.02E-07	6.02E-07	1.96E-05
THYMUS	G	9.75E-06	7.60E-07	1.34E-05	2.60E-06	2.81E-06	1.23E-06	1.94E-06	1.20E-05	6.59E-05	6.59E-05	2.31E-05
	B	0.0	0.0	0.0	0.0	0.0	0.0	0.0	0.0	0.0	0.0	0.0
	T	9.75E-06	7.60E-07	1.34E-05	2.60E-06	2.81E-06	1.23E-06	1.94E-06	1.20E-05	6.59E-05	6.59E-05	2.31E-05
THYROID	G	3.62E-06	2.86E-07	2.82E-06	9.10E-07	9.61E-07	4.65E-07	1.88E-06	3.29E-06	2.10E-05	2.10E-05	2.13E-05
	B	0.0	0.0	0.0	0.0	0.0	0.0	0.0	0.0	0.0	0.0	0.0
	T	3.62E-06	2.86E-07	2.82E-06	9.10E-07	9.61E-07	4.65E-07	1.88E-06	3.29E-06	2.10E-05	2.10E-05	2.13E-05
UTERUS	G	8.08E-06	2.21E-04	4.56E-05	1.29E-04	7.38E-05	8.64E-05	1.40E-05	6.76E-06	2.34E-06	2.34E-06	4.04E-05
	B	0.0	0.0	0.0	0.0	0.0	0.0	0.0	0.0	0.0	0.0	0.0
	T	8.08E-06	2.21E-04	4.56E-05	1.29E-04	7.38E-05	8.64E-05	1.40E-05	6.76E-06	2.34E-06	2.34E-06	4.04E-05
T BODY	G	2.61E-05	2.86E-05	2.74E-05	3.00E-05	2.94E-05	2.92E-05	2.62E-05	2.62E-05	2.23E-05	2.23E-05	2.27E-05
	B	4.88E-04	5.49E-05	1.46E-04	3.90E-04	2.33E-04	2.89E-04	4.88E-04	4.88E-04	4.88E-04	4.88E-04	4.88E-04
	T	5.14E-04	8.35E-05	4.74E-04	4.20E-04	2.62E-04	3.18E-04	5.14E-04	5.14E-04	5.10E-04	5.10E-04	5.11E-04

CONTINUED NEXT PAGE

37-RUBIDIUM-86 CONTINUED

TARGET ORGANS		SOURCE ORGANS										
		OVARIES	PANCREAS	COR BONE	CAN BONE	R MARROW	Y MARROW	SKIN	SPLEEN	TESTES	THYROID	T BODY
ADRENALS	G	8.83E-06	1.04E-04	3.01E-05	3.01E-05	4.60E-05	9.81E-06	1.35E-05	1.11E-04	1.48E-06	3.54E-06	3.07E-05
	B	0.0	0.0	0.0	0.0	0.0	0.0	0.0	0.0	0.0	0.0	4.88E-04
	T	8.83E-06	1.04E-04	3.01E-05	3.01E-05	4.60E-05	9.81E-06	1.35E-05	1.11E-04	1.48E-06	3.54E-06	5.19E-04
BLAD WALL	G	1.08E-04	2.40E-06	7.50E-06	7.50E-06	1.83E-05	5.38E-06	1.28E-05	5.77E-06	8.11E-05	2.87E-07	3.18E-05
	B	0.0	0.0	0.0	0.0	0.0	0.0	0.0	0.0	0.0	0.0	4.88E-04
	T	1.08E-04	2.40E-06	7.50E-06	7.50E-06	1.83E-05	5.38E-06	1.28E-05	5.77E-06	8.11E-05	2.87E-07	5.20E-04
GI TRACT S WALL	G	1.25E-05	2.57E-04	8.61E-06	8.61E-06	1.89E-05	1.20E-05	1.06E-05	1.43E-04	1.41E-06	2.36E-06	2.54E-05
	B	0.0	0.0	0.0	0.0	0.0	0.0	0.0	0.0	0.0	0.0	4.88E-04
	T	1.25E-05	2.57E-04	8.61E-06	8.61E-06	1.89E-05	1.20E-05	1.06E-05	1.43E-04	1.41E-06	2.36E-06	5.13E-04
SI+CONT	G	1.70E-04	2.82E-05	1.31E-05	1.31E-05	3.98E-05	1.60E-05	9.64E-06	2.21E-05	8.59E-06	7.03E-07	3.01E-05
	B	0.0	0.0	0.0	0.0	0.0	0.0	0.0	0.0	0.0	0.0	4.88E-04
	T	1.70E-04	2.82E-05	1.31E-05	1.31E-05	3.98E-05	1.60E-05	9.64E-06	2.21E-05	8.59E-06	7.03E-07	5.18E-04
ULI WALL	G	1.61E-04	3.43E-05	1.24E-05	1.24E-05	2.90E-05	1.39E-05	1.05E-05	2.21E-05	6.56E-06	7.88E-07	2.85E-05
	B	0.0	0.0	0.0	0.0	0.0	0.0	0.0	0.0	0.0	0.0	4.88E-04
	T	1.61E-04	3.43E-05	1.24E-05	1.24E-05	2.90E-05	1.39E-05	1.05E-05	2.21E-05	6.56E-06	7.88E-07	5.16E-04
LLI WALL	G	2.03E-04	9.30E-06	1.69E-05	1.69E-05	4.56E-05	1.31E-05	1.06E-05	9.97E-06	3.55E-05	4.03E-07	3.04E-05
	B	0.0	0.0	0.0	0.0	0.0	0.0	0.0	0.0	0.0	0.0	4.88E-04
	T	2.03E-04	9.30E-06	1.69E-05	1.69E-05	4.56E-05	1.31E-05	1.06E-05	9.97E-06	3.55E-05	4.03E-07	5.18E-04
KIDNEYS	G	1.73E-05	9.28E-05	1.88E-05	1.88E-05	3.73E-05	1.84E-05	1.24E-05	1.25E-04	2.49E-06	2.12E-06	2.78E-05
	B	0.0	0.0	0.0	0.0	0.0	0.0	0.0	0.0	0.0	0.0	4.88E-04
	T	1.73E-05	9.28E-05	1.88E-05	1.88E-05	3.73E-05	1.84E-05	1.24E-05	1.25E-04	2.49E-06	2.12E-06	5.16E-04
LIVER	G	1.05E-05	6.16E-05	1.15E-05	1.15E-05	1.58E-05	1.75E-05	1.08E-05	1.70E-05	1.78E-06	3.21E-06	2.79E-05
	B	0.0	0.0	0.0	0.0	0.0	0.0	0.0	0.0	0.0	0.0	4.88E-04
	T	1.05E-05	6.16E-05	1.15E-05	1.15E-05	1.58E-05	1.75E-05	1.08E-05	1.70E-05	1.78E-06	3.21E-06	5.16E-04
LUNGS	G	2.62E-06	3.54E-05	1.57E-05	1.57E-05	1.93E-05	1.63E-05	1.14E-05	3.26E-05	5.29E-07	1.81E-05	2.17E-05
	B	0.0	0.0	0.0	0.0	0.0	0.0	0.0	0.0	0.0	0.0	4.88E-04
	T	2.62E-06	3.54E-05	1.57E-05	1.57E-05	1.93E-05	1.63E-05	1.14E-05	3.26E-05	5.29E-07	1.81E-05	5.10E-04
RESP LYM NODE	G	2.62E-06	3.54E-05	1.57E-05	1.57E-05	1.93E-05	1.63E-05	1.14E-05	3.26E-05	5.29E-07	1.81E-05	2.17E-05
	B	0.0	0.0	0.0	0.0	0.0	0.0	0.0	0.0	0.0	0.0	4.88E-04
	T	2.62E-06	3.54E-05	1.57E-05	1.57E-05	1.93E-05	1.63E-05	1.14E-05	3.26E-05	5.29E-07	1.81E-05	5.10E-04
MUSCLE*	G	3.06E-05	2.73E-05	1.76E-05	1.76E-05	2.06E-05	1.62E-05	1.51E-05	2.29E-05	1.96E-05	2.13E-05	2.27E-05
	B	0.0	0.0	0.0	0.0	0.0	0.0	0.0	0.0	0.0	0.0	4.88E-04
	T	3.06E-05	2.73E-05	1.76E-05	1.76E-05	2.06E-05	1.62E-05	1.51E-05	2.29E-05	1.96E-05	2.13E-05	5.11E-04
OVARIES	G	1.16E-02	1.61E-05	1.49E-05	1.49E-05	4.28E-05	1.48E-05	9.92E-06	8.56E-06	0.0	4.79E-07	2.20E-05
	B	3.10E 00	0.0	0.0	0.0	0.0	0.0	0.0	0.0	0.0	0.0	4.88E-04
	T	3.12E 00	1.61E-05	1.49E-05	1.49E-05	4.28E-05	1.48E-05	9.92E-06	8.56E-06	0.0	4.79E-07	5.10E-04

37-RUBIDIUM-86 CONTINUED

S O U R C E O R G A N S

TARGET ORGANS		OVARIES	PANCREAS	COR BONE	CAN BONE	R MARROW	Y MARROW	SKIN	SPLEEN	TESTES	THYROID	T BODY
PANCREAS	G	1.43E-05	3.22E-03	1.62E-05	1.62E-05	1.79E-05	1.58E-05	7.95E-06	2.75E-04	1.81E-06	1.87E-06	2.53E-05
	B	0.0	3.42E-01	0.0	0.0	0.0	0.0	0.0	0.0	0.0	0.0	4.88E-04
	T	1.43E-05	3.45E-01	1.62E-05	1.62E-05	1.79E-05	1.58E-05	7.95E-06	2.75E-04	1.81E-06	1.87E-06	5.13E-04
SKELETON BONE	G	1.38E-05	1.37E-05	5.28E-05	5.28E-05	3.50E-05	3.93E-05	1.36E-05	1.19E-05	1.03E-05	1.15E-05	2.23E-05
	B	0.0	0.0	6.83E-03	3.85E-03	1.99E-03	0.0	0.0	0.0	0.0	0.0	4.88E-04
	T	1.38E-05	1.37E-05	6.88E-03	3.90E-03	2.02E-03	3.93E-05	1.36E-05	1.19E-05	1.03E-05	1.15E-05	5.10E-04
R MARROW	G	4.44E-05	2.56E-05	4.79E-05	4.79E-05	1.11E-04	4.04E-05	1.27E-05	1.73E-05	8.02E-06	1.24E-05	2.46E-05
	B	0.0	0.0	4.47E-04	9.95E-03	1.61E-02	0.0	0.0	0.0	0.0	0.0	4.88E-04
	T	4.44E-05	2.56E-05	4.95E-04	1.00E-02	1.62E-02	4.04E-05	1.27E-05	1.73E-05	8.02E-06	1.24E-05	5.12E-04
Y MARROW	G	1.81E-05	1.62E-05	4.57E-05	4.57E-05	4.32E-05	6.65E-05	1.45E-05	1.76E-05	4.52E-06	6.26E-06	2.09E-05
	B	0.0	0.0	0.0	0.0	0.0	2.28E-02	0.0	0.0	0.0	0.0	4.88E-04
	T	1.81E-05	1.62E-05	4.57E-05	4.57E-05	4.32E-05	2.28E-02	1.45E-05	1.76E-05	4.52E-06	6.26E-06	5.09E-04
T E CL	G	1.38E-05	1.37E-05	5.28E-05	5.28E-05	4.70E-05	4.33E-05	1.36E-05	1.19E-05	1.03E-05	1.15E-05	2.23E-05
	B	0.0	0.0	4.36E-03	6.61E-03	6.98E-03	5.69E-03	0.0	0.0	0.0	0.0	4.88E-04
	T	1.38E-05	1.37E-05	4.42E-03	6.66E-03	7.02E-03	5.74E-03	1.36E-05	1.19E-05	1.03E-05	1.15E-05	5.10E-04
SKIN	G	9.06E-06	9.06E-06	1.38E-05	1.38E-05	1.21E-05	1.52E-05	3.30E-05	1.03E-05	2.48E-05	1.47E-05	1.52E-05
	B	0.0	0.0	0.0	0.0	0.0	0.0	1.31E-02	0.0	0.0	0.0	4.88E-04
	T	9.06E-06	9.06E-06	1.38E-05	1.38E-05	1.21E-05	1.52E-05	1.32E-02	1.03E-05	2.48E-05	1.47E-05	5.03E-04
SPLEEN	G	9.57E-06	2.76E-04	1.36E-05	1.36E-05	1.68E-05	1.82E-05	1.23E-05	1.95E-03	1.04E-06	3.41E-06	2.69E-05
	B	0.0	0.0	0.0	0.0	0.0	0.0	0.0	1.90E-01	0.0	0.0	4.88E-04
	T	9.57E-06	2.76E-04	1.36E-05	1.36E-05	1.68E-05	1.82E-05	1.23E-05	1.92E-01	1.04E-06	3.41E-06	5.15E-04
TESTES	G	0.0	2.08E-06	1.09E-05	1.09E-05	6.34E-06	1.44E-05	1.49E-05	1.89E-06	5.49E-03	1.26E-07	2.69E-05
	B	0.0	0.0	0.0	0.0	0.0	0.0	0.0	0.0	9.76E-01	0.0	4.88E-04
	T	0.0	2.08E-06	1.09E-05	1.09E-05	6.34E-06	1.44E-05	1.49E-05	1.89E-06	9.81E-01	1.26E-07	5.15E-04
THYMUS	G	1.30E-06	8.75E-06	1.26E-05	1.26E-05	1.16E-05	7.70E-06	1.13E-05	1.02E-05	3.23E-07	6.00E-05	2.13E-05
	B	0.0	0.0	0.0	0.0	0.0	0.0	0.0	0.0	0.0	0.0	4.89E-04
	T	1.30E-06	8.75E-06	1.26E-05	1.26E-05	1.16E-05	7.70E-06	1.13E-05	1.02E-05	3.23E-07	6.00E-05	5.09E-04
THYROID	G	4.79E-07	8.99E-07	9.37E-06	9.37E-06	1.46E-05	8.79E-06	1.15E-05	2.75E-06	1.26E-07	7.38E-03	2.44E-05
	B	0.0	0.0	0.0	0.0	0.0	0.0	0.0	0.0	0.0	1.71E 00	4.88E-04
	T	4.79E-07	8.99E-07	9.37E-06	9.37E-06	1.46E-05	8.79E-06	1.15E-05	2.75E-06	1.26E-07	1.71E 00	5.12E-04
UTERUS	G	2.53E-04	9.57E-06	1.43E-05	1.43E-05	2.51E-05	1.02E-05	1.21E-05	9.06E-06	0.0	4.58E-07	3.64E-05
	B	0.0	0.0	0.0	0.0	0.0	0.0	0.0	0.0	0.0	0.0	4.88E-04
	T	2.53E-04	9.57E-06	1.43E-05	1.43E-05	2.51E-05	1.02E-05	1.21E-05	9.06E-06	0.0	4.58E-07	5.24E-04
T BODY	G	3.05E-05	2.97E-05	2.25E-05	2.25E-05	2.47E-05	2.00E-05	1.51E-05	2.61E-05	2.24E-05	2.04E-05	2.25E-05
	B	4.88E-04	4.88E-04	4.88E-04	4.88E-04	4.88E-04	4.88E-04	4.88E-04	4.88E-04	4.88E-04	4.88E-04	4.88E-04
	T	5.18E-04	5.18E-04	5.10E-04	5.10E-04	5.13E-04	5.08E-04	5.03E-04	5.14E-04	5.10E-04	5.08E-04	5.10E-04

*"MUSCLE" VALUES MAY BE USED FOR "SEPARABLE FAT" WITH ADJUSTMENT (SEE TEXT)
PRINCIPLE REFERENCE-NUCLEAR DATA B5, 167 (1971)
DATE DECAY DATA REVIEWED-AUGUST 1973

S, AVERAGE DOSE EQUIVALENT PER UNIT ACCUMULATED ACTIVITY (REM/UCI-DAY), FOR 38-STRONTIUM-85M (TR=7.000E 01 MIN)

DATE OF TABLE 11-27-74

TARGET ORGANS		SOURCE ORGANS										
		ADRENALS	BLAD CON	S CONT	SI+CONT	ULI CONT	LLI CONT	KIDNEYS	LIVER	LUNG	RESP LYM NODE	MUSCLE*
ADRENALS	G	1.87E-02	7.60E-06	9.24E-05	5.92E-05	3.57E-05	1.78E-05	3.92E-04	1.93E-04	9.56E-05	9.56E-05	5.67E-05
	B	5.57E-02	0.0	0.0	0.0	0.0	0.0	0.0	0.0	0.0	0.0	0.0
	T	7.45E-02	7.60E-06	9.24E-05	5.92E-05	3.57E-05	1.78E-05	3.92E-04	1.93E-04	9.56E-05	9.56E-05	5.67E-05
BLAD WALL	G	4.66E-06	2.77E-03	9.53E-06	1.03E-04	8.23E-05	2.51E-04	1.23E-05	6.73E-06	2.01E-06	2.01E-06	6.81E-05
	B	0.0	1.95E-03	0.0	0.0	0.0	0.0	0.0	0.0	0.0	0.0	0.0
	T	4.66E-06	4.72E-03	9.53E-06	1.03E-04	8.23E-05	2.51E-04	1.23E-05	6.73E-06	2.01E-06	2.01E-06	6.81E-05
GI TRACT S WALL	G	1.13E-04	1.11E-05	1.98E-03	1.41E-04	1.43E-04	6.87E-05	1.31E-04	7.48E-05	7.14E-05	7.14E-05	5.33E-05
	B	0.0	0.0	1.56E-03	0.0	0.0	0.0	0.0	0.0	0.0	0.0	0.0
	T	1.13E-04	1.11E-05	3.54E-03	1.41E-04	1.43E-04	6.87E-05	1.31E-04	7.48E-05	7.14E-05	7.14E-05	5.33E-05
SI+CONT	G	3.32E-05	1.10E-04	1.01E-04	1.21E-03	6.39E-04	3.59E-04	1.10E-04	6.45E-05	7.95E-06	7.95E-06	5.97E-05
	B	0.0	0.0	0.0	9.75E-04	0.0	0.0	0.0	0.0	0.0	0.0	0.0
	T	3.32E-05	1.10E-04	1.01E-04	2.19E-03	6.39E-04	3.59E-04	1.10E-04	6.45E-05	7.95E-06	7.95E-06	5.97E-05
ULI WALL	G	3.60E-05	9.02E-05	1.36E-04	9.21E-04	1.64E-03	1.64E-04	1.11E-04	9.49E-05	9.71E-06	9.71E-06	6.23E-05
	B	0.0	0.0	0.0	0.0	1.77E-03	0.0	0.0	0.0	0.0	0.0	0.0
	T	3.60E-05	9.02E-05	1.36E-04	9.21E-04	3.42E-03	1.64E-04	1.11E-04	9.49E-05	9.71E-06	9.71E-06	6.23E-05
LLI WALL	G	9.25E-06	2.73E-04	4.98E-05	2.75E-04	1.16E-04	1.96E-03	3.26E-05	9.51E-06	4.12E-06	4.12E-06	6.51E-05
	B	0.0	0.0	0.0	0.0	0.0	2.89E-03	0.0	0.0	0.0	0.0	0.0
	T	9.25E-06	2.73E-04	4.98E-05	2.75E-04	1.16E-04	4.85E-03	3.26E-05	9.51E-06	4.12E-06	4.12E-06	6.51E-05
KIDNEYS	G	4.46E-04	1.12E-05	1.35E-04	1.18E-04	1.07E-04	3.66E-05	2.82E-03	1.48E-04	3.44E-05	3.44E-05	5.38E-05
	B	0.0	0.0	0.0	0.0	0.0	0.0	2.52E-03	0.0	0.0	0.0	0.0
	T	4.46E-04	1.12E-05	1.35E-04	1.18E-04	1.07E-04	3.66E-05	5.34E-03	1.48E-04	3.44E-05	3.44E-05	5.38E-05
LIVER	G	1.91E-04	8.41E-06	7.62E-05	7.15E-05	1.00E-04	1.11E-05	1.48E-04	9.94E-04	9.50E-05	9.50E-05	4.15E-05
	B	0.0	0.0	0.0	0.0	0.0	0.0	0.0	4.34E-04	0.0	0.0	0.0
	T	1.91E-04	8.41E-06	7.62E-05	7.15E-05	1.00E-04	1.11E-05	1.48E-04	1.43E-03	9.50E-05	9.50E-05	4.15E-05
LUNGS	G	9.56E-05	1.08E-06	6.54E-05	9.95E-06	1.08E-05	3.41E-06	3.28E-05	9.55E-05	5.95E-04	5.95E-04	5.04E-05
	B	0.0	0.0	0.0	0.0	0.0	0.0	0.0	0.0	7.80E-04	7.80E-04	0.0
	T	9.56E-05	1.08E-06	6.54E-05	9.95E-06	1.08E-05	3.41E-06	3.28E-05	9.55E-05	1.38E-03	1.38E-03	5.04E-05
RESP LYM NODE	G	9.56E-05	1.08E-06	6.54E-05	9.95E-06	1.08E-05	3.41E-06	3.28E-05	9.55E-05	5.93E-04	5.95E-04	5.04E-05
	B	0.0	0.0	0.0	0.0	0.0	0.0	0.0	0.0	4.08E-04	5.20E-02	0.0
	T	9.56E-05	1.08E-06	6.54E-05	9.95E-06	1.08E-05	3.41E-06	3.28E-05	9.55E-05	1.00E-03	5.26E-02	5.04E-05
MUSCLE*	G	5.67E-05	6.81E-05	5.37E-05	5.97E-05	5.66E-05	6.51E-05	5.38E-05	4.15E-05	5.04E-05	5.04E-05	5.59E-05
	B	0.0	0.0	0.0	0.0	0.0	0.0	0.0	0.0	0.0	0.0	2.79E-05
	T	5.67E-05	6.81E-05	5.37E-05	5.97E-05	5.66E-05	6.51E-05	5.38E-05	4.15E-05	5.04E-05	5.04E-05	8.38E-05
OVARIES	G	2.27E-05	2.89E-04	1.70E-05	4.01E-04	4.50E-04	7.52E-04	4.73E-05	1.82E-05	4.78E-06	4.78E-06	7.65E-05
	B	0.0	0.0	0.0	0.0	0.0	0.0	0.0	0.0	0.0	0.0	0.0
	T	2.27E-05	2.89E-04	1.70E-05	4.01E-04	4.50E-04	7.52E-04	4.73E-05	1.82E-05	4.78E-06	4.78E-06	7.65E-05

38-STRONTIUM-85M CONTINUED

SOURCE ORGANS

TARGET ORGANS		ADRENALS	BLAD CON	S CONT	SI+CONT	ULI CONT	LLI CONT	KIDNEYS	LIVER	LUNG	RESP LYM NODE	MUSCLE*
PANCREAS	G	3.29E-04	1.15E-05	6.89E-04	7.91E-05	9.18E-05	2.73E-05	2.48E-04	1.51E-04	9.79E-05	9.79E-05	6.88E-05
	B	0.0	0.0	0.0	0.0	0.0	0.0	0.0	0.0	0.0	0.0	0.0
	T	3.29E-04	1.15E-05	6.89E-04	7.91E-05	9.18E-05	2.73E-05	2.48E-04	1.51E-04	9.79E-05	9.79E-05	6.88E-05
SKELETON BONE	G	6.16E-05	2.92E-05	2.82E-05	3.85E-05	3.46E-05	4.91E-05	4.44E-05	3.46E-05	4.47E-05	4.47E-05	4.05E-05
	B	0.0	0.0	0.0	0.0	0.0	0.0	0.0	0.0	0.0	0.0	0.0
	T	6.16E-05	2.92E-05	2.82E-05	3.85E-05	3.46E-05	4.91E-05	4.44E-05	3.46E-05	4.47E-05	4.47E-05	4.05E-05
R MARROW	G	1.13E-04	6.61E-05	5.04E-05	1.26E-04	1.09E-04	1.49E-04	1.15E-04	5.05E-05	5.70E-05	5.70E-05	6.13E-05
	B	0.0	0.0	0.0	0.0	0.0	0.0	0.0	0.0	0.0	0.0	0.0
	T	1.13E-04	6.61E-05	5.04E-05	1.26E-04	1.09E-04	1.49E-04	1.15E-04	5.05E-05	5.70E-05	5.70E-05	6.13E-05
Y MARROW	G	5.94E-05	2.69E-05	3.91E-05	5.37E-05	4.94E-05	6.04E-05	5.47E-05	5.10E-05	4.63E-05	4.63E-05	4.74E-05
	B	0.0	0.0	0.0	0.0	0.0	0.0	0.0	0.0	0.0	0.0	0.0
	T	5.94E-05	2.69E-05	3.91E-05	5.37E-05	4.94E-05	6.04E-05	5.47E-05	5.10E-05	4.63E-05	4.63E-05	4.74E-05
T E CL	G	6.16E-05	2.92E-05	2.82E-05	3.85E-05	3.46E-05	4.91E-05	4.44E-05	3.46E-05	4.47E-05	4.47E-05	4.05E-05
	B	0.0	0.0	0.0	0.0	0.0	0.0	0.0	0.0	0.0	0.0	0.0
	T	6.16E-05	2.92E-05	2.82E-05	3.85E-05	3.46E-05	4.91E-05	4.44E-05	3.46E-05	4.47E-05	4.47E-05	4.05E-05
SKIN	G	2.27E-05	2.20E-05	1.84E-05	1.78E-05	1.78E-05	2.05E-05	2.24E-05	2.05E-05	2.28E-05	2.28E-05	3.04E-05
	B	0.0	0.0	0.0	0.0	0.0	0.0	0.0	0.0	0.0	0.0	0.0
	T	2.27E-05	2.20E-05	1.84E-05	1.78E-05	1.78E-05	2.05E-05	2.24E-05	2.05E-05	2.28E-05	2.28E-05	3.04E-05
SPLEEN	G	2.55E-04	7.69E-06	3.84E-04	6.00E-05	5.37E-05	3.05E-05	3.35E-04	3.63E-05	8.80E-05	8.80E-05	5.59E-05
	B	0.0	0.0	0.0	0.0	0.0	0.0	0.0	0.0	0.0	0.0	0.0
	T	2.55E-04	7.69E-06	3.84E-04	6.00E-05	5.37E-05	3.05E-05	3.35E-04	3.63E-05	8.80E-05	8.80E-05	5.59E-05
TESTES	G	1.85E-06	1.75E-04	2.40E-06	1.37E-05	1.29E-05	7.77E-05	4.59E-06	3.33E-06	5.24E-07	5.24E-07	4.49E-05
	B	0.0	0.0	0.0	0.0	0.0	0.0	0.0	0.0	0.0	0.0	0.0
	T	1.85E-06	1.75E-04	2.40E-06	1.37E-05	1.29E-05	7.77E-05	4.59E-06	3.33E-06	5.24E-07	5.24E-07	4.49E-05
THYMUS	G	1.68E-05	7.01E-07	9.61E-06	4.22E-06	4.73E-06	1.53E-06	8.26E-06	2.70E-05	1.54E-04	1.54E-04	1.06E-04
	B	0.0	0.0	0.0	0.0	0.0	0.0	0.0	0.0	0.0	0.0	0.0
	T	1.68E-05	7.01E-07	9.61E-06	4.22E-06	4.73E-06	1.53E-06	8.26E-06	2.70E-05	1.54E-04	1.54E-04	1.06E-04
THYROID	G	6.33E-06	1.59E-07	4.69E-06	9.29E-07	1.02E-06	3.66E-07	2.64E-06	8.47E-06	3.37E-05	3.37E-05	5.08E-05
	B	0.0	0.0	0.0	0.0	0.0	0.0	0.0	0.0	0.0	0.0	0.0
	T	6.33E-06	1.59E-07	4.69E-06	9.29E-07	1.02E-06	3.66E-07	2.64E-06	8.47E-06	3.37E-05	3.37E-05	5.08E-05
UTERUS	G	8.20E-05	5.95E-04	3.21E-05	3.57E-04	1.83E-04	2.68E-04	4.09E-05	1.53E-05	3.75E-06	3.75E-06	8.94E-05
	B	0.0	0.0	0.0	0.0	0.0	0.0	0.0	0.0	0.0	0.0	0.0
	T	8.20E-05	5.95E-04	3.21E-05	3.57E-04	1.83E-04	2.68E-04	4.09E-05	1.53E-05	3.75E-06	3.75E-06	8.94E-05
T BODY	G	6.47E-05	7.24E-05	6.84E-05	7.70E-05	7.46E-05	7.44E-05	6.50E-05	6.55E-05	5.64E-05	5.64E-05	5.33E-05
	B	1.11E-05	1.25E-06	3.34E-06	8.92E-06	5.32E-06	6.61E-06	1.11E-05	1.11E-05	1.11E-05	1.11E-05	1.11E-05
	T	7.58E-05	7.36E-05	7.18E-05	8.59E-05	8.00E-05	8.10E-05	7.62E-05	7.67E-05	6.76E-05	6.76E-05	6.44E-05

CONTINUED NEXT PAGE

38-STRONTIUM-85M CONTINUED

SOURCE ORGANS

TARGET ORGANS		OVARIES	PANCREAS	COR BONE	CAN BONE	R MARROW	Y MARROW	SKIN	SPLEEN	TESTES	THYROID	T BODY
ADRENALS	G	1.52E-05	3.23E-04	4.95E-05	4.95E-05	1.01E-04	5.44E-05	3.16E-05	2.48E-04	1.85E-06	6.33E-06	7.30E-05
	B	0.0	0.0	0.0	0.0	0.0	0.0	0.0	0.0	0.0	0.0	1.11E-05
	T	1.52E-05	3.23E-04	4.95E-05	4.95E-05	1.01E-04	5.44E-05	3.16E-05	2.48E-04	1.85E-06	6.33E-06	8.42E-05
BLAD WALL	G	2.65E-04	6.16E-06	1.90E-05	1.90E-05	3.01E-05	1.42E-05	2.08E-05	6.43E-06	1.85E-04	1.60E-07	6.78E-05
	B	0.0	0.0	0.0	0.0	0.0	0.0	0.0	0.0	0.0	0.0	1.11E-05
	T	2.65E-04	6.16E-06	1.90E-05	1.90E-05	3.01E-05	1.42E-05	2.08E-05	6.43E-06	1.85E-04	1.60E-07	7.89E-05
GI TRACT S WALL	G	3.08E-05	7.03E-04	2.24E-05	2.24E-05	4.22E-05	2.87E-05	2.16E-05	3.67E-04	2.04E-06	1.89E-06	7.28E-05
	B	0.0	0.0	0.0	0.0	0.0	0.0	0.0	0.0	0.0	0.0	1.11E-05
	T	3.08E-05	7.03E-04	2.24E-05	2.24E-05	4.22E-05	2.87E-05	2.16E-05	3.67E-04	2.04E-06	1.89E-06	8.39E-05
SI+CONT	G	4.55E-04	7.16E-05	2.96E-05	2.96E-05	1.00E-04	4.11E-05	1.89E-05	5.48E-05	1.65E-05	5.73E-07	7.69E-05
	B	0.0	0.0	0.0	0.0	0.0	0.0	0.0	0.0	0.0	0.0	1.11E-05
	T	4.55E-04	7.16E-05	2.96E-05	2.96E-05	1.00E-04	4.11E-05	1.89E-05	5.48E-05	1.65E-05	5.73E-07	8.80E-05
ULI WALL	G	4.34E-04	8.54E-05	2.86E-05	2.86E-05	8.12E-05	3.67E-05	1.83E-05	4.85E-05	1.40E-05	4.33E-07	7.03E-05
	B	0.0	0.0	0.0	0.0	0.0	0.0	0.0	0.0	0.0	0.0	1.11E-05
	T	4.34E-04	8.54E-05	2.86E-05	2.86E-05	8.12E-05	3.67E-05	1.83E-05	4.85E-05	1.40E-05	4.33E-07	8.15E-05
LLI WALL	G	5.53E-04	2.21E-05	4.09E-05	4.09E-05	1.12E-04	3.49E-05	1.95E-05	2.47E-05	1.07E-04	2.98E-07	6.62E-05
	B	0.0	0.0	0.0	0.0	0.0	0.0	0.0	0.0	0.0	0.0	1.11E-05
	T	5.53E-04	2.21E-05	4.09E-05	4.09E-05	1.12E-04	3.49E-05	1.95E-05	2.47E-05	1.07E-04	2.98E-07	7.74E-05
KIDNEYS	G	3.79E-05	2.46E-04	3.52E-05	3.52E-05	8.67E-05	4.26E-05	2.50E-05	3.40E-04	2.31E-06	1.53E-06	6.69E-05
	B	0.0	0.0	0.0	0.0	0.0	0.0	0.0	0.0	0.0	0.0	1.11E-05
	T	3.79E-05	2.46E-04	3.52E-05	3.52E-05	8.67E-05	4.26E-05	2.50E-05	3.40E-04	2.31E-06	1.53E-06	7.81E-05
LIVER	G	2.27E-05	1.68E-04	2.59E-05	2.59E-05	3.79E-05	3.85E-05	2.21E-05	3.97E-05	1.60E-06	4.68E-06	6.39E-05
	B	0.0	0.0	0.0	0.0	0.0	0.0	0.0	0.0	0.0	0.0	1.11E-05
	T	2.27E-05	1.68E-04	2.59E-05	2.59E-05	3.79E-05	3.85E-05	2.21E-05	3.97E-05	1.60E-06	4.68E-06	7.51E-05
LUNGS	G	2.87E-06	9.62E-05	3.77E-05	3.77E-05	4.68E-05	3.76E-05	2.45E-05	8.57E-05	4.62E-07	3.70E-05	5.53E-05
	B	0.0	0.0	0.0	0.0	0.0	0.0	0.0	0.0	0.0	0.0	1.11E-05
	T	2.87E-06	9.62E-05	3.77E-05	3.77E-05	4.68E-05	3.76E-05	2.45E-05	8.57E-05	4.62E-07	3.70E-05	6.65E-05
RESP LYM NODE	G	2.87E-06	9.62E-05	3.77E-05	3.77E-05	4.68E-05	3.76E-05	2.45E-05	8.57E-05	4.62E-07	3.70E-05	5.53E-05
	B	0.0	0.0	0.0	0.0	0.0	0.0	0.0	0.0	0.0	0.0	1.11E-05
	T	2.87E-06	9.62E-05	3.77E-05	3.77E-05	4.68E-05	3.76E-05	2.45E-05	8.57E-05	4.62E-07	3.70E-05	6.65E-05
MUSCLE*	G	7.65E-05	6.88E-05	4.05E-05	4.05E-05	4.84E-05	3.62E-05	3.04E-05	5.59E-05	4.49E-05	5.08E-05	5.33E-05
	B	0.0	0.0	0.0	0.0	0.0	0.0	0.0	0.0	0.0	0.0	1.11E-05
	T	7.65E-05	6.88E-05	4.05E-05	4.05E-05	4.84E-05	3.62E-05	3.04E-05	5.59E-05	4.49E-05	5.08E-05	6.44E-05
OVARIES	G	3.23E-02	1.28E-05	2.81E-05	2.81E-05	9.31E-05	5.32E-05	1.81E-05	2.33E-05	1.89E-47	3.47E-07	7.16E-05
	B	7.09E-02	0.0	0.0	0.0	0.0	0.0	0.0	0.0	0.0	0.0	1.11E-05
	T	1.03E-01	1.28E-05	2.81E-05	2.81E-05	9.31E-05	5.32E-05	1.81E-05	2.33E-05	1.89E-47	3.47E-07	8.28E-05

38-STRONTIUM-85M CONTINUED

TARGET ORGANS		SOURCE ORGANS										
		OVARIES	PANCREAS	COR BONE	CAN BONE	R MARROW	Y MARROW	SKIN	SPLEEN	TESTES	THYROID	T BODY
PANCREAS	G	1.93E-05	8.39E-03	4.08E-05	4.08E-05	6.30E-05	5.07E-05	2.19E-05	7.18E-04	2.77E-06	4.03E-06	8.15E-05
	B	0.0	7.80E-03	0.0	0.0	0.0	0.0	0.0	0.0	0.0	0.0	1.11E-05
	T	1.93E-05	1.62E-02	4.08E-05	4.08E-05	6.30E-05	5.07E-05	2.19E-05	7.18E-04	2.77E-06	4.03E-06	9.26E-05
SKELETON BONE	G	4.56E-05	4.36E-05	1.48E-04	1.48E-04	9.85E-05	1.07E-04	3.31E-05	3.54E-05	2.97E-05	3.25E-05	6.39E-05
	B	0.0	0.0	1.56E-04	1.27E-04	1.92E-05	0.0	0.0	0.0	0.0	0.0	1.11E-05
	T	4.56E-05	4.36E-05	3.04E-04	2.75E-04	1.18E-04	1.07E-04	3.31E-05	3.54E-05	2.97E-05	3.25E-05	7.50E-05
R MARROW	G	1.57E-04	8.40E-05	1.33E-04	1.33E-04	3.19E-04	1.11E-04	3.15E-05	5.45E-05	2.43E-05	3.57E-05	7.31E-05
	B	0.0	0.0	1.40E-06	9.62E-05	4.56E-04	0.0	0.0	0.0	0.0	0.0	1.11E-05
	T	1.57E-04	8.40E-05	1.34E-04	2.29E-04	7.75E-04	1.11E-04	3.15E-05	5.45E-05	2.43E-05	3.57E-05	8.43E-05
Y MARROW	G	6.08E-05	5.10E-05	1.28E-04	1.28E-04	1.22E-04	1.85E-04	3.45E-05	5.23E-05	1.17E-05	1.70E-05	5.96E-05
	B	0.0	0.0	0.0	0.0	0.0	5.20E-04	0.0	0.0	0.0	0.0	1.11E-05
	T	6.08E-05	5.10E-05	1.28E-04	1.28E-04	1.22E-04	7.05E-04	3.45E-05	5.23E-05	1.17E-05	1.70E-05	7.08E-05
T E CL	G	4.56E-05	4.36E-05	1.48E-04	1.48E-04	1.34E-04	1.20E-04	3.31E-05	3.54E-05	2.97E-05	3.25E-05	6.42E-05
	B	0.0	0.0	5.56E-05	1.03E-04	1.91E-04	1.30E-04	0.0	0.0	0.0	0.0	1.11E-05
	T	4.56E-05	4.36E-05	2.03E-04	2.51E-04	3.25E-04	2.50E-04	3.31E-05	3.54E-05	2.97E-05	3.25E-05	7.53E-05
SKIN	G	1.77E-05	1.71E-05	2.87E-05	2.87E-05	2.62E-05	3.18E-05	7.65E-05	1.99E-05	5.62E-05	3.10E-05	3.13E-05
	B	0.0	0.0	0.0	0.0	0.0	0.0	3.00E-04	0.0	0.0	0.0	1.11E-05
	T	1.77E-05	1.71E-05	2.87E-05	2.87E-05	2.62E-05	3.18E-05	3.77E-04	1.99E-05	5.62E-05	3.10E-05	4.25E-05
SPLEEN	G	2.18E-05	7.30E-04	2.56E-05	2.56E-05	3.54E-05	4.07E-05	2.25E-05	5.06E-03	1.18E-06	4.68E-06	6.84E-05
	B	0.0	0.0	0.0	0.0	0.0	0.0	0.0	4.34E-03	0.0	0.0	1.11E-05
	T	2.18E-05	7.30E-04	2.56E-05	2.56E-05	3.54E-05	4.07E-05	2.25E-05	9.40E-03	1.18E-06	4.68E-06	7.96E-05
TESTES	G	1.89E-47	2.86E-06	2.40E-05	2.40E-05	1.26E-05	4.16E-05	4.02E-05	2.68E-06	1.42E-02	4.48E-08	4.53E-05
	B	0.0	0.0	0.0	0.0	0.0	0.0	0.0	0.0	2.23E-02	0.0	1.11E-05
	T	1.89E-47	2.86E-06	2.40E-05	2.40E-05	1.26E-05	4.16E-05	4.02E-05	2.68E-06	3.65E-02	4.48E-08	5.64E-05
THYMUS	G	1.55E-06	3.12E-05	1.91E-05	1.91E-05	2.86E-05	2.75E-05	2.72E-05	1.45E-05	1.91E-07	1.65E-04	8.85E-05
	B	0.0	0.0	0.0	0.0	0.0	0.0	0.0	0.0	0.0	0.0	1.11E-05
	T	1.55E-06	3.12E-05	1.91E-05	1.91E-05	2.86E-05	2.75E-05	2.72E-05	1.45E-05	1.91E-07	1.65E-04	9.97E-05
THYROID	G	3.47E-07	5.97E-06	3.60E-05	3.60E-05	2.86E-05	4.48E-05	2.96E-05	4.51E-06	4.49E-08	1.94E-02	4.80E-05
	B	0.0	0.0	0.0	0.0	0.0	0.0	0.0	0.0	0.0	3.90E-02	1.11E-05
	T	3.47E-07	5.97E-06	3.60E-05	3.60E-05	2.86E-05	4.48E-05	2.96E-05	4.51E-06	4.49E-08	5.84E-02	5.92E-05
UTERUS	G	8.00E-04	2.46E-05	2.39E-05	2.39E-05	8.78E-05	2.46E-05	1.57E-05	1.56E-05	1.89E-47	3.24E-07	8.09E-05
	B	0.0	0.0	0.0	0.0	0.0	0.0	0.0	0.0	0.0	0.0	1.11E-05
	T	8.00E-04	2.46E-05	2.39E-05	2.39E-05	8.78E-05	2.46E-05	1.57E-05	1.56E-05	1.89E-47	3.24E-07	9.21E-05
T BODY	G	7.86E-05	7.68E-05	5.55E-05	5.55E-05	6.17E-05	4.81E-05	3.15E-05	6.54E-05	5.33E-05	4.91E-05	5.48E-05
	B	1.11E-05	1.11E-05	1.11E-05	1.11E-05	1.11E-05	1.11E-05	1.11E-05	1.11E-05	1.11E-05	1.11E-05	1.11E-05
	T	8.97E-05	8.80E-05	6.66E-05	6.66E-05	7.29E-05	5.93E-05	4.26E-05	7.65E-05	6.45E-05	6.02E-05	6.59E-05

*"MUSCLE" VALUES MAY BE USED FOR "SEPARABLE FAT" WITH ADJUSTMENT (SEE TEXT)
PRINCIPLE REFERENCE-NUCLEAR DATA SHEET 60-3-42
DATE DECAY DATA REVIEWED-DECEMBER 1968

S, AVERAGE DOSE EQUIVALENT PER UNIT ACCUMULATED ACTIVITY (REM/UCI-DAY), FOR 38-STRONTIUM-85 (TR=6.519E 01 DAYS)

DATE OF TABLE 11-27-74

TARGET ORGANS		SOURCE ORGANS										
		ADRENALS	BLAD CON	S CONT	SI+CONT	ULI CONT	LLI CONT	KIDNEYS	LIVER	LUNG	RESP LYM NODE	MUSCLE*
ADRENALS	G	5.73E-02	2.08E-05	1.90E-04	1.11E-04	9.06E-05	4.44E-05	1.13E-03	4.39E-04	2.19E-04	2.19E-04	1.41E-04
	B	3.44E-02	0.0	0.0	0.0	0.0	0.0	0.0	0.0	0.0	0.0	0.0
	T	9.17E-02	2.08E-05	1.90E-04	1.11E-04	9.06E-05	4.44E-05	1.13E-03	4.39E-04	2.19E-04	2.19E-04	1.41E-04
BLAD WALL	G	9.97E-06	7.18E-03	4.12E-05	3.03E-04	1.71E-04	5.03E-04	3.45E-05	3.10E-05	6.68E-06	6.68E-06	1.60E-04
	B	0.0	1.20E-03	0.0	0.0	0.0	0.0	0.0	0.0	0.0	0.0	0.0
	T	9.97E-06	8.38E-03	4.12E-05	3.03E-04	1.71E-04	5.03E-04	3.45E-05	3.10E-05	6.68E-06	6.68E-06	1.60E-04
GI TRACT S WALL	G	2.64E-04	2.93E-05	4.93E-03	3.04E-04	3.25E-04	1.62E-04	3.01E-04	1.70E-04	1.65E-04	1.65E-04	1.26E-04
	B	0.0	0.0	9.63E-04	0.0	0.0	0.0	0.0	0.0	0.0	0.0	0.0
	T	2.64E-04	2.93E-05	5.89E-03	3.04E-04	3.25E-04	1.62E-04	3.01E-04	1.70E-04	1.65E-04	1.65E-04	1.26E-04
SI+CONT	G	8.62E-05	2.34E-04	2.36E-04	3.07E-03	1.48E-03	8.08E-04	2.46E-04	1.42E-04	2.50E-05	2.50E-05	1.40E-04
	B	0.0	0.0	0.0	6.02E-04	0.0	0.0	0.0	0.0	0.0	0.0	0.0
	T	8.62E-05	2.34E-04	2.36E-04	3.67E-03	1.48E-03	8.08E-04	2.46E-04	1.42E-04	2.50E-05	2.50E-05	1.40E-04
ULI WALL	G	9.41E-05	2.12E-04	2.95E-04	2.23E-03	4.11E-03	3.86E-04	2.58E-04	2.30E-04	3.45E-05	3.45E-05	1.48E-04
	B	0.0	0.0	0.0	0.0	1.09E-03	0.0	0.0	0.0	0.0	0.0	0.0
	T	9.41E-05	2.12E-04	2.95E-04	2.23E-03	5.20E-03	3.86E-04	2.58E-04	2.30E-04	3.45E-05	3.45E-05	1.48E-04
LLI WALL	G	3.18E-05	6.34E-04	1.14E-04	6.23E-04	2.70E-04	5.02E-03	7.89E-05	2.91E-05	7.05E-06	7.05E-06	1.52E-04
	B	0.0	0.0	0.0	0.0	0.0	1.78E-03	0.0	0.0	0.0	0.0	0.0
	T	3.18E-05	6.34E-04	1.14E-04	6.23E-04	2.70E-04	6.81E-03	7.89E-05	2.91E-05	7.05E-06	7.05E-06	1.52E-04
KIDNEYS	G	1.04E-03	3.47E-05	2.94E-04	2.84E-04	2.43E-04	7.42E-05	7.79E-03	3.37E-04	9.40E-05	9.40E-05	1.30E-04
	B	0.0	0.0	0.0	0.0	0.0	0.0	1.55E-03	0.0	0.0	0.0	0.0
	T	1.04E-03	3.47E-05	2.94E-04	2.84E-04	2.43E-04	7.42E-05	9.34E-03	3.37E-04	9.40E-05	9.40E-05	1.30E-04
LIVER	G	4.39E-04	2.55E-05	1.83E-04	1.62E-04	2.20E-04	3.12E-05	3.58E-04	2.52E-03	2.14E-04	2.14E-04	1.01E-04
	B	0.0	0.0	0.0	0.0	0.0	0.0	0.0	2.67E-04	0.0	0.0	0.0
	T	4.39E-04	2.55E-05	1.83E-04	1.62E-04	2.20E-04	3.12E-05	3.58E-04	2.79E-03	2.14E-04	2.14E-04	1.01E-04
LUNGS	G	2.08E-04	4.40E-06	1.67E-04	3.02E-05	3.07E-05	9.25E-06	8.55E-05	2.15E-04	1.60E-03	1.60E-03	1.23E-04
	B	0.0	0.0	0.0	0.0	0.0	0.0	0.0	0.0	4.81E-04	4.81E-04	0.0
	T	2.08E-04	4.40E-06	1.67E-04	3.02E-05	3.07E-05	9.25E-06	8.55E-05	2.15E-04	2.08E-03	2.08E-03	1.23E-04
RESP LYM NODE	G	2.08E-04	4.40E-06	1.67E-04	3.02E-05	3.07E-05	9.25E-06	8.55E-05	2.15E-04	1.60E-03	1.60E-03	1.23E-04
	B	0.0	0.0	0.0	0.0	0.0	0.0	0.0	0.0	2.02E-04	3.21E-02	0.0
	T	2.08E-04	4.40E-06	1.67E-04	3.02E-05	3.07E-05	9.25E-06	8.55E-05	2.15E-04	1.80E-03	3.37E-02	1.23E-04
MUSCLE*	G	1.41E-04	1.60E-04	1.26E-04	1.40E-04	1.33E-04	1.52E-04	1.30E-04	1.01E-04	1.23E-04	1.23E-04	1.43E-04
	B	0.0	0.0	0.0	0.0	0.0	0.0	0.0	0.0	0.0	0.0	1.72E-05
	T	1.41E-04	1.60E-04	1.26E-04	1.40E-04	1.33E-04	1.52E-04	1.30E-04	1.01E-04	1.23E-04	1.23E-04	1.60E-04
OVARIES	G	4.90E-05	5.60E-04	4.68E-05	7.92E-04	1.14E-03	1.44E-03	1.04E-04	1.84E-05	1.38E-05	1.38E-05	1.82E-04
	B	0.0	0.0	0.0	0.0	0.0	0.0	0.0	0.0	0.0	0.0	0.0
	T	4.90E-05	5.60E-04	4.68E-05	7.92E-04	1.14E-03	1.44E-03	1.04E-04	1.84E-05	1.38E-05	1.38E-05	1.82E-04

38-STRONTIUM-85 CONTINUED

TARGET ORGANS		SOURCE ORGANS										
		ADRENALS	BLAD CON	S CONT	SI+CONT	ULI CONT	LLI CONT	KIDNEYS	LIVER	LUNG	RESP LYM NODE	MUSCLE*
PANCREAS	G	7.52E-04	2.34E-05	1.57E-03	1.87E-04	1.60E-04	6.71E-05	5.87E-04	4.31E-04	2.49E-04	2.49E-04	1.64E-04
	B	0.0	0.0	0.0	0.0	0.0	0.0	0.0	0.0	0.0	0.0	0.0
	T	7.52E-04	2.34E-05	1.57E-03	1.87E-04	1.60E-04	6.71E-05	5.87E-04	4.31E-04	2.49E-04	2.49E-04	1.64E-04
SKELETON BONE	G	1.23E-04	5.28E-05	5.42E-05	7.04E-05	6.49E-05	9.38E-05	8.84E-05	6.60E-05	9.01E-05	9.01E-05	9.98E-05
	B	0.0	0.0	0.0	0.0	0.0	0.0	0.0	0.0	0.0	0.0	0.0
	T	1.23E-04	5.28E-05	5.42E-05	7.04E-05	6.49E-05	9.38E-05	8.84E-05	6.60E-05	9.01E-05	9.01E-05	9.98E-05
R MARROW	G	2.20E-04	1.12E-04	9.38E-05	2.24E-04	1.94E-04	2.81E-04	2.24E-04	9.69E-05	1.13E-04	1.13E-04	1.25E-04
	B	0.0	0.0	0.0	0.0	0.0	0.0	0.0	0.0	0.0	0.0	0.0
	T	2.20E-04	1.12E-04	9.38E-05	2.24E-04	1.94E-04	2.81E-04	2.24E-04	9.69E-05	1.13E-04	1.13E-04	1.25E-04
Y MARROW	G	1.19E-04	4.82E-05	7.54E-05	9.76E-05	9.21E-05	1.16E-04	1.10E-04	9.66E-05	9.50E-05	9.50E-05	1.02E-04
	B	0.0	0.0	0.0	0.0	0.0	0.0	0.0	0.0	0.0	0.0	0.0
	T	1.19E-04	4.82E-05	7.54E-05	9.76E-05	9.21E-05	1.16E-04	1.10E-04	9.66E-05	9.50E-05	9.50E-05	1.02E-04
T E CL	G	1.23E-04	5.28E-05	5.42E-05	7.04E-05	6.49E-05	9.38E-05	8.84E-05	6.60E-05	9.01E-05	9.01E-05	9.98E-05
	B	0.0	0.0	0.0	0.0	0.0	0.0	0.0	0.0	0.0	0.0	0.0
	T	1.23E-04	5.28E-05	5.42E-05	7.04E-05	6.49E-05	9.38E-05	8.84E-05	6.60E-05	9.01E-05	9.01E-05	9.98E-05
SKIN	G	6.13E-05	5.85E-05	5.33E-05	4.78E-05	5.00E-05	5.29E-05	5.98E-05	5.42E-05	6.12E-05	6.12E-05	8.43E-05
	B	0.0	0.0	0.0	0.0	0.0	0.0	0.0	0.0	0.0	0.0	0.0
	T	6.13E-05	5.85E-05	5.33E-05	4.78E-05	5.00E-05	5.29E-05	5.98E-05	5.42E-05	6.12E-05	6.12E-05	8.43E-05
SPLEEN	G	5.76E-04	2.04E-05	8.50E-04	1.41E-04	1.10E-04	8.47E-05	7.46E-04	9.00E-05	1.91E-04	1.91E-04	1.33E-04
	B	0.0	0.0	0.0	0.0	0.0	0.0	0.0	0.0	0.0	0.0	0.0
	T	5.76E-04	2.04E-05	8.50E-04	1.41E-04	1.10E-04	8.47E-05	7.46E-04	9.00E-05	1.91E-04	1.91E-04	1.33E-04
TESTES	G	6.41E-06	4.56E-04	2.46E-06	3.28E-05	4.64E-05	1.85E-04	1.36E-05	1.06E-05	2.23E-06	2.23E-06	1.12E-04
	B	0.0	0.0	0.0	0.0	0.0	0.0	0.0	0.0	0.0	0.0	0.0
	T	6.41E-06	4.56E-04	2.46E-06	3.28E-05	4.64E-05	1.85E-04	1.36E-05	1.06E-05	2.23E-06	2.23E-06	1.12E-04
THYMUS	G	8.49E-05	2.90E-06	2.19E-05	1.26E-05	1.38E-05	5.27E-06	3.60E-05	1.20E-04	3.29E-04	3.29E-04	1.59E-04
	B	0.0	0.0	0.0	0.0	0.0	0.0	0.0	0.0	0.0	0.0	0.0
	T	8.49E-05	2.90E-06	2.19E-05	1.26E-05	1.38E-05	5.27E-06	3.60E-05	1.20E-04	3.29E-04	3.29E-04	1.59E-04
THYROID	G	1.79E-05	8.70E-07	1.38E-05	3.63E-06	3.89E-06	1.65E-06	8.58E-06	1.65E-05	1.09E-04	1.09E-04	1.27E-04
	B	0.0	0.0	0.0	0.0	0.0	0.0	0.0	0.0	0.0	0.0	0.0
	T	1.79E-05	8.70E-07	1.38E-05	3.63E-06	3.89E-06	1.65E-06	8.58E-06	1.65E-05	1.09E-04	1.09E-04	1.27E-04
UTERUS	G	3.38E-05	1.33E-03	8.04E-05	7.79E-04	4.00E-04	4.98E-04	7.48E-05	3.94E-05	8.64E-06	8.64E-06	1.78E-04
	B	0.0	0.0	0.0	0.0	0.0	0.0	0.0	0.0	0.0	0.0	0.0
	T	3.38E-05	1.33E-03	8.04E-05	7.79E-04	4.00E-04	4.98E-04	7.48E-05	3.94E-05	8.64E-06	8.64E-06	1.78E-04
T BODY	G	1.57E-04	1.74E-04	1.65E-04	1.81E-04	1.77E-04	1.76E-04	1.58E-04	1.59E-04	1.36E-04	1.36E-04	1.35E-04
	B	6.88E-06	7.74E-07	2.06E-06	5.50E-06	3.28E-06	4.08E-06	6.88E-06	6.88E-06	6.88E-06	6.88E-06	6.88E-06
	T	1.64E-04	1.75E-04	1.67E-04	1.87E-04	1.80E-04	1.80E-04	1.65E-04	1.66E-04	1.43E-04	1.43E-04	1.42E-04

CONTINUED NEXT PAGE

38-STRONTIUM-85 CONTINUED

TARGET ORGANS		SOURCE ORGANS										
		OVARIES	PANCREAS	COR BONE	CAN BONE	R MARROW	Y MARROW	SKIN	SPLEEN	TESTES	THYROID	T BODY
ADRENALS	G	5.47E-05	7.58E-04	1.53E-04	1.53E-04	1.56E-04	9.55E-05	5.94E-05	5.41E-04	6.41E-06	1.79E-05	2.13E-04
	B	0.0	0.0	0.0	0.0	0.0	0.0	0.0	0.0	0.0	0.0	6.88E-06
	T	5.47E-05	7.58E-04	1.53E-04	1.53E-04	1.56E-04	9.55E-05	5.94E-05	5.41E-04	6.41E-06	1.79E-05	2.20E-04
BLAD WALL	G	5.97E-04	1.76E-05	5.89E-05	5.89E-05	6.14E-05	2.32E-05	5.68E-05	1.24E-05	4.56E-04	8.78E-07	1.69E-04
	B	0.0	0.0	0.0	0.0	0.0	0.0	0.0	0.0	0.0	0.0	6.88E-06
	T	5.97E-04	1.76E-05	5.89E-05	5.89E-05	6.14E-05	2.32E-05	5.68E-05	1.24E-05	4.56E-04	8.78E-07	1.76E-04
GI TRACT S WALL	G	7.53E-05	1.53E-03	5.27E-05	5.27E-05	8.94E-05	6.69E-05	5.85E-05	8.80E-04	1.05E-05	1.16E-05	1.66E-04
	B	0.0	0.0	0.0	0.0	0.0	0.0	0.0	0.0	0.0	0.0	6.88E-06
	T	7.53E-05	1.53E-03	5.27E-05	5.27E-05	8.94E-05	6.69E-05	5.85E-05	8.80E-04	1.05E-05	1.16E-05	1.73E-04
SI+CONT	G	1.07E-03	1.58E-04	7.24E-05	7.24E-05	2.42E-04	9.48E-05	4.98E-05	1.24E-04	4.82E-05	7.28E-07	1.83E-04
	B	0.0	0.0	0.0	0.0	0.0	0.0	0.0	0.0	0.0	0.0	6.88E-06
	T	1.07E-03	1.58E-04	7.24E-05	7.24E-05	2.42E-04	9.48E-05	4.98E-05	1.24E-04	4.82E-05	7.28E-07	1.90E-04
ULI WALL	G	1.01E-03	1.94E-04	6.30E-05	6.30E-05	1.86E-04	7.69E-05	5.25E-05	1.25E-04	2.90E-05	1.03E-06	1.82E-04
	B	0.0	0.0	0.0	0.0	0.0	0.0	0.0	0.0	0.0	0.0	6.88E-06
	T	1.01E-03	1.94E-04	6.30E-05	6.30E-05	1.86E-04	7.69E-05	5.25E-05	1.25E-04	2.90E-05	1.03E-06	1.89E-04
LLI WALL	G	1.29E-03	4.80E-05	8.52E-05	8.52E-05	2.77E-04	7.43E-05	5.44E-05	6.27E-05	2.55E-04	1.38E-06	1.83E-04
	B	0.0	0.0	0.0	0.0	0.0	0.0	0.0	0.0	0.0	0.0	6.88E-06
	T	1.29E-03	4.80E-05	8.52E-05	8.52E-05	2.77E-04	7.43E-05	5.44E-05	6.27E-05	2.55E-04	1.38E-06	1.90E-04
KIDNEYS	G	1.02E-04	5.55E-04	8.23E-05	8.23E-05	2.13E-04	1.10E-04	6.77E-05	7.65E-04	9.28E-06	4.59E-06	1.64E-04
	B	0.0	0.0	0.0	0.0	0.0	0.0	0.0	0.0	0.0	0.0	6.88E-06
	T	1.02E-04	5.55E-04	8.23E-05	8.23E-05	2.13E-04	1.10E-04	6.77E-05	7.65E-04	9.28E-06	4.59E-06	1.71E-04
LIVER	G	5.51E-05	3.68E-04	6.36E-05	6.36E-05	9.17E-05	9.85E-05	6.10E-05	9.63E-05	4.76E-06	1.44E-05	1.62E-04
	B	0.0	0.0	0.0	0.0	0.0	0.0	0.0	0.0	0.0	0.0	6.88E-06
	T	5.51E-05	3.68E-04	6.36E-05	6.36E-05	9.17E-05	9.85E-05	6.10E-05	9.63E-05	4.76E-06	1.44E-05	1.69E-04
LUNGS	G	1.02E-05	2.14E-04	8.83E-05	8.83E-05	1.08E-04	8.99E-05	6.12E-05	1.97E-04	1.33E-06	9.58E-05	1.45E-04
	B	0.0	0.0	0.0	0.0	0.0	0.0	0.0	0.0	0.0	0.0	6.88E-06
	T	1.02E-05	2.14E-04	8.83E-05	8.83E-05	1.08E-04	8.99E-05	6.12E-05	1.97E-04	1.33E-06	9.58E-05	1.52E-04
RESP LYM NODE	G	1.02E-05	2.14E-04	8.83E-05	8.83E-05	1.08E-04	8.99E-05	6.12E-05	1.97E-04	1.33E-06	9.58E-05	1.45E-04
	B	0.0	0.0	0.0	0.0	0.0	0.0	0.0	0.0	0.0	0.0	6.88E-06
	T	1.02E-05	2.14E-04	8.83E-05	8.83E-05	1.08E-04	8.99E-05	6.12E-05	1.97E-04	1.33E-06	9.58E-05	1.52E-04
MUSCLE*	G	1.82E-04	1.64E-04	9.98E-05	9.98E-05	1.18E-04	9.34E-05	8.43E-05	1.33E-04	1.12E-04	1.27E-04	1.35E-04
	B	0.0	0.0	0.0	0.0	0.0	0.0	0.0	0.0	0.0	0.0	6.88E-06
	T	1.82E-04	1.64E-04	9.98E-05	9.98E-05	1.18E-04	9.34E-05	8.43E-05	1.33E-04	1.12E-04	1.27E-04	1.42E-04
OVARIES	G	9.78E-02	3.51E-05	9.73E-05	9.73E-05	3.23E-04	7.59E-05	2.74E-05	9.50E-05	2.03E-47	1.65E-06	1.61E-04
	B	4.38E-02	0.0	0.0	0.0	0.0	0.0	0.0	0.0	0.0	0.0	6.88E-06
	T	1.42E-01	3.51E-05	9.73E-05	9.73E-05	3.23E-04	7.59E-05	2.74E-05	9.50E-05	2.03E-47	1.65E-06	1.67E-04

38-STRONTIUM-85 CONTINUED

TARGET ORGANS		SOURCE ORGANS										
		OVARIES	PANCREAS	COR BONE	CAN BONE	R MARROW	Y MARROW	SKIN	SPLEEN	TESTES	THYROID	T BODY
PANCREAS	G	5.05E-05	2.41E-02	8.16E-05	8.16E-05	1.53E-04	1.18E-04	5.25E-05	1.76E-03	3.51E-06	6.07E-06	1.61E-04
	B	0.0	4.81E-03	0.0	0.0	0.0	0.0	0.0	0.0	0.0	0.0	6.88E-06
	T	5.05E-05	2.89E-02	8.16E-05	8.16E-05	1.53E-04	1.18E-04	5.25E-05	1.76E-03	3.51E-06	6.07E-06	1.68E-04
SKELETON BONE	G	8.27E-05	8.24E-05	3.49E-04	3.49E-04	2.33E-04	2.63E-04	7.78E-05	6.90E-05	5.94E-05	6.79E-05	1.39E-04
	B	0.0	0.0	9.63E-05	7.91E-05	1.15E-05	0.0	0.0	0.0	0.0	0.0	6.88E-06
	T	8.27E-05	8.24E-05	4.46E-04	4.28E-04	2.45E-04	2.63E-04	7.78E-05	6.90E-05	5.94E-05	6.79E-05	1.46E-04
R MARROW	G	2.76E-04	1.55E-04	3.15E-04	3.15E-04	7.71E-04	2.74E-04	7.24E-05	1.02E-04	4.73E-05	7.52E-05	1.55E-04
	B	0.0	0.0	1.89E-06	5.73E-05	2.83E-04	0.0	0.0	0.0	0.0	0.0	6.88E-06
	T	2.76E-04	1.55E-04	3.17E-04	3.72E-04	1.05E-03	2.74E-04	7.24E-05	1.02E-04	4.73E-05	7.52E-05	1.62E-04
Y MARROW	G	1.11E-04	9.68E-05	3.06E-04	3.06E-04	2.94E-04	4.56E-04	8.26E-05	1.04E-04	2.55E-05	3.60E-05	1.32E-04
	B	0.0	0.0	0.0	0.0	0.0	3.21E-04	0.0	0.0	0.0	0.0	6.88E-06
	T	1.11E-04	9.68E-05	3.06E-04	3.06E-04	2.94E-04	7.77E-04	8.26E-05	1.04E-04	2.55E-05	3.60E-05	1.39E-04
T E CL	G	8.27E-05	8.24E-05	3.49E-04	3.49E-04	3.20E-04	2.93E-04	7.78E-05	6.90E-05	5.94E-05	6.79E-05	1.41E-04
	B	0.0	0.0	3.03E-05	5.14E-05	1.26E-04	8.02E-05	0.0	0.0	0.0	0.0	6.88E-06
	T	8.27E-05	8.24E-05	3.79E-04	4.01E-04	4.46E-04	3.73E-04	7.78E-05	6.90E-05	5.94E-05	6.79E-05	1.48E-04
SKIN	G	4.74E-05	4.56E-05	7.86E-05	7.86E-05	6.78E-05	8.80E-05	2.37E-04	5.70E-05	1.46E-04	7.78E-05	8.49E-05
	B	0.0	0.0	0.0	0.0	0.0	0.0	1.85E-04	0.0	0.0	0.0	6.88E-06
	T	4.74E-05	4.56E-05	7.86E-05	7.86E-05	6.78E-05	8.80E-05	4.22E-04	5.70E-05	1.46E-04	7.78E-05	9.18E-05
SPLEEN	G	6.24E-05	1.73E-03	7.61E-05	7.61E-05	7.26E-05	8.80E-05	5.97E-05	1.38E-02	1.17E-05	1.17E-05	1.66E-04
	B	0.0	0.0	0.0	0.0	0.0	0.0	0.0	2.67E-03	0.0	0.0	6.88E-06
	T	6.24E-05	1.73E-03	7.61E-05	7.61E-05	7.26E-05	8.80E-05	5.97E-05	1.64E-02	1.17E-05	1.17E-05	1.73E-04
TESTES	G	2.03E-47	5.77E-06	5.18E-05	5.18E-05	3.89E-05	8.71E-05	7.66E-05	8.65E-06	4.06E-02	3.14E-07	1.75E-04
	B	0.0	0.0	0.0	0.0	0.0	0.0	0.0	0.0	1.38E-02	0.0	6.88E-06
	T	2.03E-47	5.77E-06	5.18E-05	5.18E-05	3.89E-05	8.71E-05	7.66E-05	8.65E-06	5.43E-02	3.14E-07	1.81E-04
THYMUS	G	5.54E-06	4.77E-05	6.91E-05	6.91E-05	4.05E-05	3.29E-05	7.76E-05	4.36E-05	1.02E-06	3.95E-04	1.43E-04
	B	0.0	0.0	0.0	0.0	0.0	0.0	0.0	0.0	0.0	0.0	6.88E-06
	T	5.54E-06	4.77E-05	6.91E-05	6.91E-05	4.05E-05	3.29E-05	7.76E-05	4.36E-05	1.02E-06	3.95E-04	1.50E-04
THYROID	G	1.65E-06	1.65E-05	9.91E-05	9.91E-05	8.16E-05	3.97E-05	7.58E-05	1.34E-05	3.14E-07	5.72E-02	1.35E-04
	B	0.0	0.0	0.0	0.0	0.0	0.0	0.0	0.0	0.0	2.41E-02	6.88E-06
	T	1.65E-06	1.65E-05	9.91E-05	9.91E-05	8.16E-05	3.97E-05	7.58E-05	1.34E-05	3.14E-07	8.13E-02	1.42E-04
UTERUS	G	1.61E-03	5.65E-05	5.23E-05	5.23E-05	1.71E-04	5.99E-05	5.16E-05	4.23E-05	2.03E-47	1.56E-06	1.63E-04
	B	0.0	0.0	0.0	0.0	0.0	0.0	0.0	0.0	0.0	0.0	6.88E-06
	T	1.61E-03	5.65E-05	5.23E-05	5.23E-05	1.71E-04	5.99E-05	5.16E-05	4.23E-05	2.03E-47	1.56E-06	1.70E-04
T BODY	G	1.85E-04	1.82E-04	1.34E-04	1.34E-04	1.49E-04	1.21E-04	8.64E-05	1.58E-04	1.34E-04	1.23E-04	1.35E-04
	B	6.88E-06	6.88E-06	6.88E-06	6.88E-06	6.88E-06	6.88E-06	6.88E-06	6.88E-06	6.88E-06	6.88E-06	6.88E-06
	T	1.92E-04	1.88E-04	1.41E-04	1.41E-04	1.56E-04	1.28E-04	9.33E-05	1.65E-04	1.41E-04	1.30E-04	1.42E-04

*"MUSCLE" VALUES MAY BE USED FOR "SEPARABLE FAT" WITH ADJUSTMENT (SEE TEXT)
PRINCIPLE REFERENCE-NUCLEAR DATA B5, NO. 2 (1971)
DATE DECAY DATA REVIEWED-AUGUST 1974

S, AVERAGE DOSE EQUIVALENT PER UNIT ACCUMULATED ACTIVITY (REM/UCI-DAY), FOR 38-STRONTIUM-89 (TR=5.052E 01 DAYS)

DATE OF TABLE 11-27-74

TARGET ORGANS		SOURCE ORGANS										
		ADRENALS	BLAD CON	S CONT	SI+CONT	ULI CONT	LLI CONT	KIDNEYS	LIVER	LUNG	RESP LYM NODE	MUSCLE*
ADRENALS	B	2.09E 00	0.0	0.0	0.0	0.0	0.0	0.0	0.0	0.0	0.0	0.0
	T	2.09E 00	0.0	0.0	0.0	0.0	0.0	0.0	0.0	0.0	0.0	0.0
BLAD WALL	B	0.0	7.31E-02	0.0	0.0	0.0	0.0	0.0	0.0	0.0	0.0	0.0
	T	0.0	7.31E-02	0.0	0.0	0.0	0.0	0.0	0.0	0.0	0.0	0.0
GI TRACT S WALL	B	0.0	0.0	5.85E-02	0.0	0.0	0.0	0.0	0.0	0.0	0.0	0.0
	T	0.0	0.0	5.85E-02	0.0	0.0	0.0	0.0	0.0	0.0	0.0	0.0
SI+CONT	B	0.0	0.0	0.0	3.66E-02	0.0	0.0	0.0	0.0	0.0	0.0	0.0
	T	0.0	0.0	0.0	3.66E-02	0.0	0.0	0.0	0.0	0.0	0.0	0.0
ULI WALL	B	0.0	0.0	0.0	0.0	6.65E-02	0.0	0.0	0.0	0.0	0.0	0.0
	T	0.0	0.0	0.0	0.0	6.65E-02	0.0	0.0	0.0	0.0	0.0	0.0
LLI WALL	B	0.0	0.0	0.0	0.0	0.0	1.08E-01	0.0	0.0	0.0	0.0	0.0
	T	0.0	0.0	0.0	0.0	0.0	1.08E-01	0.0	0.0	0.0	0.0	0.0
KIDNEYS	B	0.0	0.0	0.0	0.0	0.0	0.0	9.44E-02	0.0	0.0	0.0	0.0
	T	0.0	0.0	0.0	0.0	0.0	0.0	9.44E-02	0.0	0.0	0.0	0.0
LIVER	B	0.0	0.0	0.0	0.0	0.0	0.0	0.0	1.63E-02	0.0	0.0	0.0
	T	0.0	0.0	0.0	0.0	0.0	0.0	0.0	1.63E-02	0.0	0.0	0.0
LUNGS	B	0.0	0.0	0.0	0.0	0.0	0.0	0.0	0.0	2.93E-02	2.93E-02	0.0
	T	0.0	0.0	0.0	0.0	0.0	0.0	0.0	0.0	2.93E-02	2.93E-02	0.0
RESP LYM NODE	B	0.0	0.0	0.0	0.0	0.0	0.0	0.0	0.0	2.93E-02	1.95E 00	0.0
	T	0.0	0.0	0.0	0.0	0.0	0.0	0.0	0.0	2.93E-02	1.95E 00	0.0
MUSCLE*	B	0.0	0.0	0.0	0.0	0.0	0.0	0.0	0.0	0.0	0.0	1.04E-03
	T	0.0	0.0	0.0	0.0	0.0	0.0	0.0	0.0	0.0	0.0	1.04E-03
OVARIES	B	0.0	0.0	0.0	0.0	0.0	0.0	0.0	0.0	0.0	0.0	0.0
	T	0.0	0.0	0.0	0.0	0.0	0.0	0.0	0.0	0.0	0.0	0.0

38-STRONTIUM-89 CONTINUED

TARGET ORGANS		SOURCE ORGANS										
		ADRENALS	BLAD CON	S CONT	SI+CONT	ULI CONT	LLI CONT	KIDNEYS	LIVER	LUNG	RESP LYM NODE	MUSCLE*
PANCREAS	B	0.0	0.0	0.0	0.0	0.0	0.0	0.0	0.0	0.0	0.0	0.0
	T	0.0	0.0	0.0	0.0	0.0	0.0	0.0	0.0	0.0	0.0	0.0
SKELETON BONE	B	0.0	0.0	0.0	0.0	0.0	0.0	0.0	0.0	0.0	0.0	0.0
	T	0.0	0.0	0.0	0.0	0.0	0.0	0.0	0.0	0.0	0.0	0.0
R MARROW	B	0.0	0.0	0.0	0.0	0.0	0.0	0.0	0.0	0.0	0.0	0.0
	T	0.0	0.0	0.0	0.0	0.0	0.0	0.0	0.0	0.0	0.0	0.0
Y MARROW	B	0.0	0.0	0.0	0.0	0.0	0.0	0.0	0.0	0.0	0.0	0.0
	T	0.0	0.0	0.0	0.0	0.0	0.0	0.0	0.0	0.0	0.0	0.0
T E CL	B	0.0	0.0	0.0	0.0	0.0	0.0	0.0	0.0	0.0	0.0	0.0
	T	0.0	0.0	0.0	0.0	0.0	0.0	0.0	0.0	0.0	0.0	0.0
SKIN	B	0.0	0.0	0.0	0.0	0.0	0.0	0.0	0.0	0.0	0.0	0.0
	T	0.0	0.0	0.0	0.0	0.0	0.0	0.0	0.0	0.0	0.0	0.0
SPLEEN	B	0.0	0.0	0.0	0.0	0.0	0.0	0.0	0.0	0.0	0.0	0.0
	T	0.0	0.0	0.0	0.0	0.0	0.0	0.0	0.0	0.0	0.0	0.0
TESTES	B	0.0	0.0	0.0	0.0	0.0	0.0	0.0	0.0	0.0	0.0	0.0
	T	0.0	0.0	0.0	0.0	0.0	0.0	0.0	0.0	0.0	0.0	0.0
THYMUS	B	0.0	0.0	0.0	0.0	0.0	0.0	0.0	0.0	0.0	0.0	0.0
	T	0.0	0.0	0.0	0.0	0.0	0.0	0.0	0.0	0.0	0.0	0.0
THYROID	B	0.0	0.0	0.0	0.0	0.0	0.0	0.0	0.0	0.0	0.0	0.0
	T	0.0	0.0	0.0	0.0	0.0	0.0	0.0	0.0	0.0	0.0	0.0
UTERUS	B	0.0	0.0	0.0	0.0	0.0	0.0	0.0	0.0	0.0	0.0	0.0
	T	0.0	0.0	0.0	0.0	0.0	0.0	0.0	0.0	0.0	0.0	0.0
T BODY	B	4.18E-04	4.70E-05	1.25E-04	3.34E-04	1.99E-04	2.48E-04	4.18E-04	4.18E-04	4.18E-04	4.18E-04	4.18E-04
	T	4.18E-04	4.70E-05	1.25E-04	3.34E-04	1.99E-04	2.48E-04	4.18E-04	4.18E-04	4.18E-04	4.18E-04	4.18E-04

CONTINUED NEXT PAGE

38-STRONTIUM-89 CONTINUED

TARGET ORGANS		SOURCE ORGANS										
		OVARIES	PANCREAS	COR BONE	CAN BONE	R MARROW	Y MARROW	SKIN	SPLEEN	TESTES	THYROID	T BODY
ADRENALS	B	0.0	0.0	0.0	0.0	0.0	0.0	0.0	0.0	0.0	0.0	4.18E-04
	T	0.0	0.0	0.0	0.0	0.0	0.0	0.0	0.0	0.0	0.0	4.18E-04
BLAD WALL	B	0.0	0.0	0.0	0.0	0.0	0.0	0.0	0.0	0.0	0.0	4.18E-04
	T	0.0	0.0	0.0	0.0	0.0	0.0	0.0	0.0	0.0	0.0	4.18E-04
GI TRACT S WALL	B	0.0	0.0	0.0	0.0	0.0	0.0	0.0	0.0	0.0	0.0	4.18E-04
	T	0.0	0.0	0.0	0.0	0.0	0.0	0.0	0.0	0.0	0.0	4.18E-04
SI+CONT	B	0.0	0.0	0.0	0.0	0.0	0.0	0.0	0.0	0.0	0.0	4.18E-04
	T	0.0	0.0	0.0	0.0	0.0	0.0	0.0	0.0	0.0	0.0	4.18E-04
ULI WALL	B	0.0	0.0	0.0	0.0	0.0	0.0	0.0	0.0	0.0	0.0	4.18E-04
	T	0.0	0.0	0.0	0.0	0.0	0.0	0.0	0.0	0.0	0.0	4.18E-04
LLI WALL	B	0.0	0.0	0.0	0.0	0.0	0.0	0.0	0.0	0.0	0.0	4.18E-04
	T	0.0	0.0	0.0	0.0	0.0	0.0	0.0	0.0	0.0	0.0	4.18E-04
KIDNEYS	B	0.0	0.0	0.0	0.0	0.0	0.0	0.0	0.0	0.0	0.0	4.18E-04
	T	0.0	0.0	0.0	0.0	0.0	0.0	0.0	0.0	0.0	0.0	4.18E-04
LIVER	B	0.0	0.0	0.0	0.0	0.0	0.0	0.0	0.0	0.0	0.0	4.18E-04
	T	0.0	0.0	0.0	0.0	0.0	0.0	0.0	0.0	0.0	0.0	4.18E-04
LUNGS	B	0.0	0.0	0.0	0.0	0.0	0.0	0.0	0.0	0.0	0.0	4.18E-04
	T	0.0	0.0	0.0	0.0	0.0	0.0	0.0	0.0	0.0	0.0	4.18E-04
RESP LYM NODE	B	0.0	0.0	0.0	0.0	0.0	0.0	0.0	0.0	0.0	0.0	4.18E-04
	T	0.0	0.0	0.0	0.0	0.0	0.0	0.0	0.0	0.0	0.0	4.18E-04
MUSCLE*	B	0.0	0.0	0.0	0.0	0.0	0.0	0.0	0.0	0.0	0.0	4.18E-04
	T	0.0	0.0	0.0	0.0	0.0	0.0	0.0	0.0	0.0	0.0	4.18E-04
OVARIES	B	2.66E 00	0.0	0.0	0.0	0.0	0.0	0.0	0.0	0.0	0.0	4.18E-04
	T	2.66E 00	0.0	0.0	0.0	0.0	0.0	0.0	0.0	0.0	0.0	4.18E-04

38-STRONTIUM-89 CONTINUED

TARGET ORGANS		SOURCE ORGANS										
		OVARIES	PANCREAS	COR BONE	CAN BONE	R MARROW	Y MARROW	SKIN	SPLEEN	TESTES	THYROID	T BODY
PANCREAS	B	0.0	2.93E-01	0.0	0.0	0.0	0.0	0.0	0.0	0.0	0.0	4.18E-04
	T	0.0	2.93E-01	0.0	0.0	0.0	0.0	0.0	0.0	0.0	0.0	4.18E-04
SKELETON BONE	B	0.0	0.0	5.85E-03	3.40E-03	1.63E-03	0.0	0.0	0.0	0.0	0.0	4.18E-04
	T	0.0	0.0	5.85E-03	3.40E-03	1.63E-03	0.0	0.0	0.0	0.0	0.0	4.18E-04
R MARROW	B	0.0	0.0	3.13E-04	8.16E-03	1.41E-02	0.0	0.0	0.0	0.0	0.0	4.18E-04
	T	0.0	0.0	3.13E-04	8.16E-03	1.41E-02	0.0	0.0	0.0	0.0	0.0	4.18E-04
Y MARROW	B	0.0	0.0	0.0	0.0	0.0	1.95E-02	0.0	0.0	0.0	0.0	4.18E-04
	T	0.0	0.0	0.0	0.0	0.0	1.95E-02	0.0	0.0	0.0	0.0	4.18E-04
T E CL	B	0.0	0.0	3.75E-03	5.96E-03	5.78E-03	4.88E-03	0.0	0.0	0.0	0.0	4.18E-04
	T	0.0	0.0	3.75E-03	5.96E-03	5.78E-03	4.88E-03	0.0	0.0	0.0	0.0	4.18E-04
SKIN	B	0.0	0.0	0.0	0.0	0.0	0.0	1.13E-02	0.0	0.0	0.0	4.18E-04
	T	0.0	0.0	0.0	0.0	0.0	0.0	1.13E-02	0.0	0.0	0.0	4.18E-04
SPLEEN	B	0.0	0.0	0.0	0.0	0.0	0.0	0.0	1.63E-01	0.0	0.0	4.18E-04
	T	0.0	0.0	0.0	0.0	0.0	0.0	0.0	1.63E-01	0.0	0.0	4.18E-04
TESTES	B	0.0	0.0	0.0	0.0	0.0	0.0	0.0	0.0	8.36E-01	0.0	4.18E-04
	T	0.0	0.0	0.0	0.0	0.0	0.0	0.0	0.0	8.36E-01	0.0	4.18E-04
THYMUS	B	0.0	0.0	0.0	0.0	0.0	0.0	0.0	0.0	0.0	0.0	4.18E-04
	T	0.0	0.0	0.0	0.0	0.0	0.0	0.0	0.0	0.0	0.0	4.18E-04
THYROID	B	0.0	0.0	0.0	0.0	0.0	0.0	0.0	0.0	0.0	1.46E 00	4.18E-04
	T	0.0	0.0	0.0	0.0	0.0	0.0	0.0	0.0	0.0	1.46E 00	4.18E-04
UTERUS	B	0.0	0.0	0.0	0.0	0.0	0.0	0.0	0.0	0.0	0.0	4.18E-04
	T	0.0	0.0	0.0	0.0	0.0	0.0	0.0	0.0	0.0	0.0	4.18E-04
T BODY	B	4.18E-04	4.18E-04	4.18E-04	4.18E-04	4.18E-04	4.18E-04	4.18E-04	4.18E-04	4.18E-04	4.18E-04	4.18E-04
	T	4.18E-04	4.18E-04	4.18E-04	4.18E-04	4.18E-04	4.18E-04	4.18E-04	4.18E-04	4.18E-04	4.18E-04	4.18E-04

*"MUSCLE" VALUES MAY BE USED FOR "SEPARABLE FAT" WITH ADJUSTMENT (SEE TEXT)
PRINCIPLE REFERENCE-NUCLEAR DATA A8, 323 (1970)
DATE DECAY DATA REVIEWED-AUGUST 1974

S, AVERAGE DOSE EQUIVALENT PER UNIT ACCUMULATED ACTIVITY (REM/UCI-DAY), FOR 38-STRONTIUM-90 (TR=2.850E 01 YEARS)

DATE OF TABLE 11-27-74

TARGET ORGANS		SOURCE ORGANS										
		ADRENALS	BLAD CON	S CONT	SI+CONT	ULI CONT	LLI CONT	KIDNEYS	LIVER	LUNG	RESP LYM NODE	MUSCLE*
ADRENALS	B	7.17E-01	0.0	0.0	0.0	0.0	0.0	0.0	0.0	0.0	0.0	0.0
	T	7.17E-01	0.0	0.0	0.0	0.0	0.0	0.0	0.0	0.0	0.0	0.0
BLAD WALL	B	0.0	2.51E-02	0.0	0.0	0.0	0.0	0.0	0.0	0.0	0.0	0.0
	T	0.0	2.51E-02	0.0	0.0	0.0	0.0	0.0	0.0	0.0	0.0	0.0
GI TRACT S WALL	B	0.0	0.0	2.01E-02	0.0	0.0	0.0	0.0	0.0	0.0	0.0	0.0
	T	0.0	0.0	2.01E-02	0.0	0.0	0.0	0.0	0.0	0.0	0.0	0.0
SI+CONT	B	0.0	0.0	0.0	1.26E-02	0.0	0.0	0.0	0.0	0.0	0.0	0.0
	T	0.0	0.0	0.0	1.26E-02	0.0	0.0	0.0	0.0	0.0	0.0	0.0
ULI WALL	B	0.0	0.0	0.0	0.0	2.28E-02	0.0	0.0	0.0	0.0	0.0	0.0
	T	0.0	0.0	0.0	0.0	2.28E-02	0.0	0.0	0.0	0.0	0.0	0.0
LLI WALL	B	0.0	0.0	0.0	0.0	0.0	3.72E-02	0.0	0.0	0.0	0.0	0.0
	T	0.0	0.0	0.0	0.0	0.0	3.72E-02	0.0	0.0	0.0	0.0	0.0
KIDNEYS	B	0.0	0.0	0.0	0.0	0.0	0.0	3.24E-02	0.0	0.0	0.0	0.0
	T	0.0	0.0	0.0	0.0	0.0	0.0	3.24E-02	0.0	0.0	0.0	0.0
LIVER	B	0.0	0.0	0.0	0.0	0.0	0.0	0.0	5.58E-03	0.0	0.0	0.0
	T	0.0	0.0	0.0	0.0	0.0	0.0	0.0	5.58E-03	0.0	0.0	0.0
LUNGS	B	0.0	0.0	0.0	0.0	0.0	0.0	0.0	0.0	1.00E-02	1.00E-02	0.0
	T	0.0	0.0	0.0	0.0	0.0	0.0	0.0	0.0	1.00E-02	1.00E-02	0.0
RESP LYM NODE	B	0.0	0.0	0.0	0.0	0.0	0.0	0.0	0.0	1.00E-02	6.69E-01	0.0
	T	0.0	0.0	0.0	0.0	0.0	0.0	0.0	0.0	1.00E-02	6.69E-01	0.0
MUSCLE*	B	0.0	0.0	0.0	0.0	0.0	0.0	0.0	0.0	0.0	0.0	3.59E-04
	T	0.0	0.0	0.0	0.0	0.0	0.0	0.0	0.0	0.0	0.0	3.59E-04
OVARIES	B	0.0	0.0	0.0	0.0	0.0	0.0	0.0	0.0	0.0	0.0	0.0
	T	0.0	0.0	0.0	0.0	0.0	0.0	0.0	0.0	0.0	0.0	0.0

38-STRONTIUM-90 CONTINUED

TARGET ORGANS		SOURCE ORGANS										
		ADRENALS	BLAD CON	S CONT	SI+CONT	ULI CONT	LLI CONT	KIDNEYS	LIVER	LUNG	RESP LYM NODE	MUSCLE*
PANCREAS	B	0.0	0.0	0.0	0.0	0.0	0.0	0.0	0.0	0.0	0.0	0.0
	T	0.0	0.0	0.0	0.0	0.0	0.0	0.0	0.0	0.0	0.0	0.0
SKELETON BONE	B	0.0	0.0	0.0	0.0	0.0	0.0	0.0	0.0	0.0	0.0	0.0
	T	0.0	0.0	0.0	0.0	0.0	0.0	0.0	0.0	0.0	0.0	0.0
R MARROW	B	0.0	0.0	0.0	0.0	0.0	0.0	0.0	0.0	0.0	0.0	0.0
	T	0.0	0.0	0.0	0.0	0.0	0.0	0.0	0.0	0.0	0.0	0.0
Y MARROW	B	0.0	0.0	0.0	0.0	0.0	0.0	0.0	0.0	0.0	0.0	0.0
	T	0.0	0.0	0.0	0.0	0.0	0.0	0.0	0.0	0.0	0.0	0.0
T E CL	B	0.0	0.0	0.0	0.0	0.0	0.0	0.0	0.0	0.0	0.0	0.0
	T	0.0	0.0	0.0	0.0	0.0	0.0	0.0	0.0	0.0	0.0	0.0
SKIN	B	0.0	0.0	0.0	0.0	0.0	0.0	0.0	0.0	0.0	0.0	0.0
	T	0.0	0.0	0.0	0.0	0.0	0.0	0.0	0.0	0.0	0.0	0.0
SPLEEN	B	0.0	0.0	0.0	0.0	0.0	0.0	0.0	0.0	0.0	0.0	0.0
	T	0.0	0.0	0.0	0.0	0.0	0.0	0.0	0.0	0.0	0.0	0.0
TESTES	B	0.0	0.0	0.0	0.0	0.0	0.0	0.0	0.0	0.0	0.0	0.0
	T	0.0	0.0	0.0	0.0	0.0	0.0	0.0	0.0	0.0	0.0	0.0
THYMUS	B	0.0	0.0	0.0	0.0	0.0	0.0	0.0	0.0	0.0	0.0	0.0
	T	0.0	0.0	0.0	0.0	0.0	0.0	0.0	0.0	0.0	0.0	0.0
THYROID	B	0.0	0.0	0.0	0.0	0.0	0.0	0.0	0.0	0.0	0.0	0.0
	T	0.0	0.0	0.0	0.0	0.0	0.0	0.0	0.0	0.0	0.0	0.0
UTERUS	B	0.0	0.0	0.0	0.0	0.0	0.0	0.0	0.0	0.0	0.0	0.0
	T	0.0	0.0	0.0	0.0	0.0	0.0	0.0	0.0	0.0	0.0	0.0
T BODY	B	1.43E-04	1.61E-05	4.30E-05	1.15E-04	6.85E-05	8.50E-05	1.43E-04	1.43E-04	1.43E-04	1.43E-04	1.43E-04
	T	1.43E-04	1.61E-05	4.30E-05	1.15E-04	6.85E-05	8.50E-05	1.43E-04	1.43E-04	1.43E-04	1.43E-04	1.43E-04

CONTINUED NEXT PAGE

38-STRONTIUM-90 CONTINUED

TARGET ORGANS		SOURCE ORGANS										
		OVARIES	PANCREAS	COR BONE	CAN BONE	R MARROW	Y MARROW	SKIN	SPLEEN	TESTES	THYROID	T BODY
ADRENALS	B	0.0	0.0	0.0	0.0	0.0	0.0	0.0	0.0	0.0	0.0	1.43E-04
	T	0.0	0.0	0.0	0.0	0.0	0.0	0.0	0.0	0.0	0.0	1.43E-04
BLAD WALL	B	0.0	0.0	0.0	0.0	0.0	0.0	0.0	0.0	0.0	0.0	1.43E-04
	T	0.0	0.0	0.0	0.0	0.0	0.0	0.0	0.0	0.0	0.0	1.43E-04
GI TRACT S WALL	B	0.0	0.0	0.0	0.0	0.0	0.0	0.0	0.0	0.0	0.0	1.43E-04
	T	0.0	0.0	0.0	0.0	0.0	0.0	0.0	0.0	0.0	0.0	1.43E-04
SI+CONT	B	0.0	0.0	0.0	0.0	0.0	0.0	0.0	0.0	0.0	0.0	1.43E-04
	T	0.0	0.0	0.0	0.0	0.0	0.0	0.0	0.0	0.0	0.0	1.43E-04
ULI WALL	B	0.0	0.0	0.0	0.0	0.0	0.0	0.0	0.0	0.0	0.0	1.43E-04
	T	0.0	0.0	0.0	0.0	0.0	0.0	0.0	0.0	0.0	0.0	1.43E-04
LLI WALL	B	0.0	0.0	0.0	0.0	0.0	0.0	0.0	0.0	0.0	0.0	1.43E-04
	T	0.0	0.0	0.0	0.0	0.0	0.0	0.0	0.0	0.0	0.0	1.43E-04
KIDNEYS	B	0.0	0.0	0.0	0.0	0.0	0.0	0.0	0.0	0.0	0.0	1.43E-04
	T	0.0	0.0	0.0	0.0	0.0	0.0	0.0	0.0	0.0	0.0	1.43E-04
LIVER	B	0.0	0.0	0.0	0.0	0.0	0.0	0.0	0.0	0.0	0.0	1.43E-04
	T	0.0	0.0	0.0	0.0	0.0	0.0	0.0	0.0	0.0	0.0	1.43E-04
LUNGS	B	0.0	0.0	0.0	0.0	0.0	0.0	0.0	0.0	0.0	0.0	1.43E-04
	T	0.0	0.0	0.0	0.0	0.0	0.0	0.0	0.0	0.0	0.0	1.43E-04
RESP LYM NODE	B	0.0	0.0	0.0	0.0	0.0	0.0	0.0	0.0	0.0	0.0	1.43E-04
	T	0.0	0.0	0.0	0.0	0.0	0.0	0.0	0.0	0.0	0.0	1.43E-04
MUSCLE*	B	0.0	0.0	0.0	0.0	0.0	0.0	0.0	0.0	0.0	0.0	1.43E-04
	T	0.0	0.0	0.0	0.0	0.0	0.0	0.0	0.0	0.0	0.0	1.43E-04
OVARIES	B	9.13E-01	0.0	0.0	0.0	0.0	0.0	0.0	0.0	0.0	0.0	1.43E-04
	T	9.13E-01	0.0	0.0	0.0	0.0	0.0	0.0	0.0	0.0	0.0	1.43E-04

38-STRONTIUM-90 CONTINUED

TARGET ORGANS		SOURCE ORGANS										
		OVARIES	PANCREAS	COR BONE	CAN BONE	R MARROW	Y MARROW	SKIN	SPLEEN	TESTES	THYROID	T BODY
PANCREAS	B	0.0	1.00E-01	0.0	0.0	0.0	0.0	0.0	0.0	0.0	0.0	1.43E-04
	T	0.0	1.00E-01	0.0	0.0	0.0	0.0	0.0	0.0	0.0	0.0	1.43E-04
SKELETON BONE	B	0.0	0.0	2.01E-03	1.31E-03	4.64E-04	0.0	0.0	0.0	0.0	0.0	1.43E-04
	T	0.0	0.0	2.01E-03	1.31E-03	4.64E-04	0.0	0.0	0.0	0.0	0.0	1.43E-04
R MARROW	B	0.0	0.0	3.14E-05	2.32E-03	5.15E-03	0.0	0.0	0.0	0.0	0.0	1.43E-04
	T	0.0	0.0	3.14E-05	2.32E-03	5.15E-03	0.0	0.0	0.0	0.0	0.0	1.43E-04
Y MARROW	B	0.0	0.0	0.0	0.0	0.0	6.69E-03	0.0	0.0	0.0	0.0	1.43E-04
	T	0.0	0.0	0.0	0.0	0.0	6.69E-03	0.0	0.0	0.0	0.0	1.43E-04
T E CL	B	0.0	0.0	1.26E-03	2.34E-03	1.79E-03	1.67E-03	0.0	0.0	0.0	0.0	1.43E-04
	T	0.0	0.0	1.26E-03	2.34E-03	1.79E-03	1.67E-03	0.0	0.0	0.0	0.0	1.43E-04
SKIN	B	0.0	0.0	0.0	0.0	0.0	0.0	3.86E-03	0.0	0.0	0.0	1.43E-04
	T	0.0	0.0	0.0	0.0	0.0	0.0	3.86E-03	0.0	0.0	0.0	1.43E-04
SPLEEN	B	0.0	0.0	0.0	0.0	0.0	0.0	0.0	5.58E-02	0.0	0.0	1.43E-04
	T	0.0	0.0	0.0	0.0	0.0	0.0	0.0	5.58E-02	0.0	0.0	1.43E-04
TESTES	B	0.0	0.0	0.0	0.0	0.0	0.0	0.0	0.0	2.87E-01	0.0	1.43E-04
	T	0.0	0.0	0.0	0.0	0.0	0.0	0.0	0.0	2.87E-01	0.0	1.43E-04
THYMUS	B	0.0	0.0	0.0	0.0	0.0	0.0	0.0	0.0	0.0	0.0	1.43E-04
	T	0.0	0.0	0.0	0.0	0.0	0.0	0.0	0.0	0.0	0.0	1.43E-04
THYROID	B	0.0	0.0	0.0	0.0	0.0	0.0	0.0	0.0	0.0	5.02E-01	1.43E-04
	T	0.0	0.0	0.0	0.0	0.0	0.0	0.0	0.0	0.0	5.02E-01	1.43E-04
UTERUS	B	0.0	0.0	0.0	0.0	0.0	0.0	0.0	0.0	0.0	0.0	1.43E-04
	T	0.0	0.0	0.0	0.0	0.0	0.0	0.0	0.0	0.0	0.0	1.43E-04
T BODY	B	1.43E-04	1.43E-04	1.43E-04	1.43E-04	1.43E-04	1.43E-04	1.43E-04	1.43E-04	1.43E-04	1.43E-04	1.43E-04
	T	1.43E-04	1.43E-04	1.43E-04	1.43E-04	1.43E-04	1.43E-04	1.43E-04	1.43E-04	1.43E-04	1.43E-04	1.43E-04

*"MUSCLE" VALUES MAY BE USED FOR "SEPARABLE FAT" WITH ADJUSTMENT (SEE TEXT)
PRINCIPLE REFERENCE-LEDERER, C. M. ET AL., TABLE OF ISOTOPES, 6TH ED.
DATE DECAY DATA REVIEWED-AUGUST 1974

S, AVERAGE DOSE EQUIVALENT PER UNIT ACCUMULATED ACTIVITY (REM/UCI-DAY), FOR 38-STRONTIUM-91 (TR=9.500E 00 HOURS)

DATE OF TABLE 11-27-74

TARGET ORGANS		SOURCE ORGANS										
		ADRENALS	BLAD CON	S CONT	SI+CONT	ULI CONT	LLI CONT	KIDNEYS	LIVER	LUNG	RESP LYM NODE	MUSCLE*
ADRENALS	G	7.88E-02	4.20E-05	3.76E-04	2.06E-04	1.96E-04	8.51E-05	2.10E-03	8.21E-04	4.06E-04	4.06E-04	2.61E-04
	B	2.45E 00	0.0	0.0	0.0	0.0	0.0	0.0	0.0	0.0	0.0	0.0
	T	2.53E 00	4.20E-05	3.76E-04	2.06E-04	1.96E-04	8.51E-05	2.10E-03	8.21E-04	4.06E-04	4.06E-04	2.61E-04
BLAD WALL	G	3.32E-05	1.21E-02	8.23E-05	4.67E-04	3.45E-04	9.09E-04	7.49E-05	4.41E-05	1.46E-05	1.46E-05	3.01E-04
	B	0.0	8.56E-02	0.0	0.0	0.0	0.0	0.0	0.0	0.0	0.0	0.0
	T	3.32E-05	9.77E-02	8.23E-05	4.67E-04	3.45E-04	9.09E-04	7.49E-05	4.41E-05	1.46E-05	1.46E-05	3.01E-04
GI TRACT S WALL	G	5.01E-04	7.70E-05	8.73E-03	5.86E-04	6.07E-04	2.82E-04	5.62E-04	3.30E-04	3.24E-04	3.24E-04	2.40E-04
	B	0.0	0.0	6.85E-02	0.0	0.0	0.0	0.0	0.0	0.0	0.0	0.0
	T	5.01E-04	7.70E-05	7.72E-02	5.86E-04	6.07E-04	2.82E-04	5.62E-04	3.30E-04	3.24E-04	3.24E-04	2.40E-04
SI+CONT	G	1.64E-04	4.54E-04	4.36E-04	5.14E-03	2.70E-03	1.50E-03	4.70E-04	2.70E-04	5.25E-05	5.25E-05	2.63E-04
	B	0.0	0.0	0.0	4.28E-02	0.0	0.0	0.0	0.0	0.0	0.0	0.0
	T	1.64E-04	4.54E-04	4.36E-04	4.80E-02	2.70E-03	1.50E-03	4.70E-04	2.70E-04	5.25E-05	5.25E-05	2.63E-04
ULI WALL	G	1.87E-04	3.61E-04	5.35E-04	3.82E-03	7.27E-03	6.88E-04	4.86E-04	4.17E-04	6.93E-05	6.93E-05	2.78E-04
	B	0.0	0.0	0.0	0.0	7.78E-02	0.0	0.0	0.0	0.0	0.0	0.0
	T	1.87E-04	3.61E-04	5.35E-04	3.82E-03	8.51E-02	6.88E-04	4.86E-04	4.17E-04	6.93E-05	6.93E-05	2.78E-04
LLI WALL	G	5.17E-05	1.15E-03	2.28E-04	1.15E-03	5.37E-04	8.62E-03	1.51E-04	5.14E-05	1.50E-05	1.50E-05	2.88E-04
	B	0.0	0.0	0.0	0.0	0.0	1.27E-01	0.0	0.0	0.0	0.0	0.0
	T	5.17E-05	1.15E-03	2.28E-04	1.15E-03	5.37E-04	1.35E-01	1.51E-04	5.14E-05	1.50E-05	1.50E-05	2.88E-04
KIDNEYS	G	1.90E-03	6.46E-05	5.56E-04	5.37E-04	4.77E-04	1.52E-04	1.22E-02	6.29E-04	1.74E-04	1.74E-04	2.45E-04
	B	0.0	0.0	0.0	0.0	0.0	0.0	1.10E-01	0.0	0.0	0.0	0.0
	T	1.90E-03	6.46E-05	5.56E-04	5.37E-04	4.77E-04	1.52E-04	1.23E-01	6.29E-04	1.74E-04	1.74E-04	2.45E-04
LIVER	G	8.08E-04	5.10E-05	3.39E-04	3.14E-04	4.22E-04	6.44E-05	6.59E-04	4.29E-03	4.04E-04	4.04E-04	1.92E-04
	B	0.0	0.0	0.0	0.0	0.0	0.0	0.0	1.90E-02	0.0	0.0	0.0
	T	8.08E-04	5.10E-05	3.39E-04	3.14E-04	4.22E-04	6.44E-05	6.59E-04	2.33E-02	4.04E-04	4.04E-04	1.92E-04
LUNGS	G	4.00E-04	1.19E-05	3.07E-04	5.93E-05	6.62E-05	2.37E-05	1.68E-04	4.11E-04	2.43E-03	2.43E-03	2.27E-04
	B	0.0	0.0	0.0	0.0	0.0	0.0	0.0	0.0	3.43E-02	3.43E-02	0.0
	T	4.00E-04	1.19E-05	3.07E-04	5.93E-05	6.62E-05	2.37E-05	1.68E-04	4.11E-04	3.67E-02	3.67E-02	2.27E-04
RESP LYM NODE	G	4.00E-04	1.19E-05	3.07E-04	5.93E-05	6.62E-05	2.37E-05	1.68E-04	4.11E-04	2.43E-03	2.43E-03	2.27E-04
	B	0.0	0.0	0.0	0.0	0.0	0.0	0.0	0.0	3.42E-02	2.28E 00	0.0
	T	4.00E-04	1.19E-05	3.07E-04	5.93E-05	6.62E-05	2.37E-05	1.68E-04	4.11E-04	3.67E-02	2.29E 00	2.27E-04
MUSCLE*	G	2.61E-04	3.01E-04	2.40E-04	2.63E-04	2.52E-04	2.88E-04	2.45E-04	1.92E-04	2.27E-04	2.27E-04	2.60E-04
	B	0.0	0.0	0.0	0.0	0.0	0.0	0.0	0.0	0.0	0.0	1.22E-03
	T	2.61E-04	3.01E-04	2.40E-04	2.63E-04	2.52E-04	2.88E-04	2.45E-04	1.92E-04	2.27E-04	2.27E-04	1.48E-03
OVARIES	G	9.08E-05	8.97E-04	1.80E-04	1.62E-03	1.64E-03	2.79E-03	2.41E-04	8.90E-05	2.84E-05	2.84E-05	3.37E-04
	B	0.0	0.0	0.0	0.0	0.0	0.0	0.0	0.0	0.0	0.0	0.0
	T	9.08E-05	8.97E-04	1.80E-04	1.62E-03	1.64E-03	2.79E-03	2.41E-04	8.90E-05	2.84E-05	2.84E-05	3.37E-04

38-STRONTIUM-91 CONTINUED

TARGET ORGANS		SOURCE ORGANS										
		ADRENALS	BLAD CON	S CONT	SI+CONT	ULI CONT	LLI CONT	KIDNEYS	LIVER	LUNG	RESP LYM NODE	MUSCLE*
PANCREAS	G	1.45E-03	4.85E-05	2.85E-03	3.46E-04	3.33E-04	1.27E-04	1.14E-03	7.56E-04	4.20E-04	4.20E-04	3.03E-04
	B	0.0	0.0	0.0	0.0	0.0	0.0	0.0	0.0	0.0	0.0	0.0
	T	1.45E-03	4.85E-05	2.85E-03	3.46E-04	3.33E-04	1.27E-04	1.14E-03	7.56E-04	4.20E-04	4.20E-04	3.03E-04
SKELETON BONE	G	2.30E-04	9.66E-05	1.01E-04	1.33E-04	1.19E-04	1.73E-04	1.65E-04	1.23E-04	1.68E-04	1.68E-04	1.91E-04
	B	0.0	0.0	0.0	0.0	0.0	0.0	0.0	0.0	0.0	0.0	0.0
	T	2.30E-04	9.66E-05	1.01E-04	1.33E-04	1.19E-04	1.73E-04	1.65E-04	1.23E-04	1.68E-04	1.68E-04	1.91E-04
R MARROW	G	4.09E-04	2.04E-04	1.72E-04	4.15E-04	3.51E-04	5.17E-04	4.15E-04	1.76E-04	2.12E-04	2.12E-04	2.28E-04
	B	0.0	0.0	0.0	0.0	0.0	0.0	0.0	0.0	0.0	0.0	0.0
	T	4.09E-04	2.04E-04	1.72E-04	4.15E-04	3.51E-04	5.17E-04	4.15E-04	1.76E-04	2.12E-04	2.12E-04	2.28E-04
Y MARROW	G	2.23E-04	8.90E-05	1.40E-04	1.83E-04	1.69E-04	2.14E-04	2.05E-04	1.82E-04	1.77E-04	1.77E-04	1.87E-04
	B	0.0	0.0	0.0	0.0	0.0	0.0	0.0	0.0	0.0	0.0	0.0
	T	2.23E-04	8.90E-05	1.40E-04	1.83E-04	1.69E-04	2.14E-04	2.05E-04	1.82E-04	1.77E-04	1.77E-04	1.87E-04
T E CL	G	2.30E-04	9.66E-05	1.01E-04	1.33E-04	1.19E-04	1.73E-04	1.65E-04	1.23E-04	1.68E-04	1.68E-04	1.91E-04
	B	0.0	0.0	0.0	0.0	0.0	0.0	0.0	0.0	0.0	0.0	0.0
	T	2.30E-04	9.66E-05	1.01E-04	1.33E-04	1.19E-04	1.73E-04	1.65E-04	1.23E-04	1.68E-04	1.68E-04	1.91E-04
SKIN	G	1.23E-04	1.17E-04	1.05E-04	9.66E-05	9.66E-05	1.05E-04	1.15E-04	1.06E-04	1.19E-04	1.19E-04	1.61E-04
	B	0.0	0.0	0.0	0.0	0.0	0.0	0.0	0.0	0.0	0.0	0.0
	T	1.23E-04	1.17E-04	1.05E-04	9.66E-05	9.66E-05	1.05E-04	1.15E-04	1.06E-04	1.19E-04	1.19E-04	1.61E-04
SPLEEN	G	1.05E-03	4.17E-05	1.60E-03	2.67E-04	2.26E-04	1.74E-04	1.41E-03	1.85E-04	3.66E-04	3.66E-04	2.51E-04
	B	0.0	0.0	0.0	0.0	0.0	0.0	0.0	0.0	0.0	0.0	0.0
	T	1.05E-03	4.17E-05	1.60E-03	2.67E-04	2.26E-04	1.74E-04	1.41E-03	1.85E-04	3.66E-04	3.66E-04	2.51E-04
TESTES	G	1.42E-05	8.37E-04	1.85E-05	7.99E-05	9.34E-05	3.00E-04	2.82E-05	3.31E-05	5.44E-06	5.44E-06	2.13E-04
	B	0.0	0.0	0.0	0.0	0.0	0.0	0.0	0.0	0.0	0.0	0.0
	T	1.42E-05	8.37E-04	1.85E-05	7.99E-05	9.34E-05	3.00E-04	2.82E-05	3.31E-05	5.44E-06	5.44E-06	2.13E-04
THYMUS	G	1.31E-04	6.95E-06	9.89E-05	2.63E-05	2.85E-05	1.18E-05	4.10E-05	1.75E-04	6.75E-04	6.75E-04	2.62E-04
	B	0.0	0.0	0.0	0.0	0.0	0.0	0.0	0.0	0.0	0.0	0.0
	T	1.31E-04	6.95E-06	9.89E-05	2.63E-05	2.85E-05	1.18E-05	4.10E-05	1.75E-04	6.75E-04	6.75E-04	2.62E-04
THYROID	G	3.67E-05	2.41E-06	2.85E-05	8.47E-06	8.99E-06	4.14E-06	1.85E-05	3.38E-05	2.22E-04	2.22E-04	2.34E-04
	B	0.0	0.0	0.0	0.0	0.0	0.0	0.0	0.0	0.0	0.0	0.0
	T	3.67E-05	2.41E-06	2.85E-05	8.47E-06	8.99E-06	4.14E-06	1.85E-05	3.38E-05	2.22E-04	2.22E-04	2.34E-04
UTERUS	G	7.90E-05	2.47E-03	1.62E-04	1.44E-03	7.84E-04	9.45E-04	1.46E-04	7.26E-05	2.02E-05	2.02E-05	3.94E-04
	B	0.0	0.0	0.0	0.0	0.0	0.0	0.0	0.0	0.0	0.0	0.0
	T	7.90E-05	2.47E-03	1.62E-04	1.44E-03	7.84E-04	9.45E-04	1.46E-04	7.26E-05	2.02E-05	2.02E-05	3.94E-04
T BODY	G	2.86E-04	3.16E-04	3.01E-04	3.30E-04	3.24E-04	3.21E-04	2.88E-04	2.89E-04	2.45E-04	2.45E-04	2.47E-04
	B	4.89E-04	5.50E-05	1.47E-04	3.91E-04	2.34E-04	2.90E-04	4.89E-04	4.89E-04	4.89E-04	4.89E-04	4.89E-04
	T	7.75E-04	3.71E-04	4.48E-04	7.22E-04	5.57E-04	6.11E-04	7.77E-04	7.78E-04	7.35E-04	7.35E-04	7.37E-04

CONTINUED NEXT PAGE

38-STRONTIUM-91 CONTINUED

TARGET ORGANS		SOURCE ORGANS										
		OVARIES	PANCREAS	COR BONE	CAN BONE	R MARROW	Y MARROW	SKIN	SPLEEN	TESTES	THYROID	T BODY
ADRENALS	G	9.99E-05	1.27E-03	3.09E-04	3.09E-04	4.14E-04	1.36E-04	1.31E-04	1.13E-03	1.42E-05	3.64E-05	3.51E-04
	B	0.0	0.0	0.0	0.0	0.0	0.0	0.0	0.0	0.0	0.0	4.89E-04
	T	9.99E-05	1.27E-03	3.09E-04	3.09E-04	4.14E-04	1.36E-04	1.31E-04	1.13E-03	1.42E-05	3.64E-05	8.40E-04
BLAD WALL	G	1.16E-03	2.84E-05	9.31E-05	9.31E-05	1.61E-04	5.13E-05	1.25E-04	4.55E-05	8.83E-04	2.42E-06	3.32E-04
	B	0.0	0.0	0.0	0.0	0.0	0.0	0.0	0.0	0.0	0.0	4.89E-04
	T	1.16E-03	2.84E-05	9.31E-05	9.31E-05	1.61E-04	5.13E-05	1.25E-04	4.55E-05	8.83E-04	2.42E-06	8.21E-04
GI TRACT S WALL	G	1.38E-04	2.85E-03	9.64E-05	9.64E-05	1.90E-04	1.29E-04	1.14E-04	1.60E-03	1.72E-05	2.36E-05	2.92E-04
	B	0.0	0.0	0.0	0.0	0.0	0.0	0.0	0.0	0.0	0.0	4.89E-04
	T	1.38E-04	2.85E-03	9.64E-05	9.64E-05	1.90E-04	1.29E-04	1.14E-04	1.60E-03	1.72E-05	2.36E-05	7.82E-04
SI+CONT	G	1.93E-03	3.05E-04	1.41E-04	1.41E-04	4.47E-04	1.77E-04	1.00E-04	2.39E-04	9.26E-05	4.68E-06	3.33E-04
	B	0.0	0.0	0.0	0.0	0.0	0.0	0.0	0.0	0.0	0.0	4.89E-04
	T	1.93E-03	3.05E-04	1.41E-04	1.41E-04	4.47E-04	1.77E-04	1.00E-04	2.39E-04	9.26E-05	4.68E-06	8.22E-04
ULI WALL	G	1.82E-03	3.72E-04	1.28E-04	1.28E-04	3.33E-04	1.48E-04	1.08E-04	2.40E-04	6.47E-05	5.38E-06	3.23E-04
	B	0.0	0.0	0.0	0.0	0.0	0.0	0.0	0.0	0.0	0.0	4.89E-04
	T	1.82E-03	3.72E-04	1.28E-04	1.28E-04	3.33E-04	1.48E-04	1.08E-04	2.40E-04	6.47E-05	5.38E-06	8.12E-04
LLI WALL	G	2.31E-03	9.56E-05	1.74E-04	1.74E-04	5.12E-04	1.41E-04	1.10E-04	1.13E-04	4.30E-04	3.54E-06	3.36E-04
	B	0.0	0.0	0.0	0.0	0.0	0.0	0.0	0.0	0.0	0.0	4.89E-04
	T	2.31E-03	9.56E-05	1.74E-04	1.74E-04	5.12E-04	1.41E-04	1.10E-04	1.13E-04	4.30E-04	3.54E-06	8.25E-04
KIDNEYS	G	1.91E-04	1.03E-03	1.84E-04	1.84E-04	4.05E-04	2.04E-04	1.32E-04	1.40E-03	2.26E-05	1.61E-05	3.04E-04
	B	0.0	0.0	0.0	0.0	0.0	0.0	0.0	0.0	0.0	0.0	4.89E-04
	T	1.91E-04	1.03E-03	1.84E-04	1.84E-04	4.05E-04	2.04E-04	1.32E-04	1.40E-03	2.26E-05	1.61E-05	7.93E-04
LIVER	G	1.10E-04	6.85E-04	1.24E-04	1.24E-04	1.73E-04	1.89E-04	1.17E-04	1.84E-04	1.45E-05	3.13E-05	3.02E-04
	B	0.0	0.0	0.0	0.0	0.0	0.0	0.0	0.0	0.0	0.0	4.89E-04
	T	1.10E-04	6.85E-04	1.24E-04	1.24E-04	1.73E-04	1.89E-04	1.17E-04	1.84E-04	1.45E-05	3.13E-05	7.92E-04
LUNGS	G	2.43E-05	3.96E-04	1.70E-04	1.70E-04	2.08E-04	1.75E-04	1.21E-04	3.65E-04	4.15E-06	1.91E-04	2.50E-04
	B	0.0	0.0	0.0	0.0	0.0	0.0	0.0	0.0	0.0	0.0	4.89E-04
	T	2.43E-05	3.96E-04	1.70E-04	1.70E-04	2.08E-04	1.75E-04	1.21E-04	3.65E-04	4.15E-06	1.91E-04	7.40E-04
RESP LYM NODE	G	2.43E-05	3.96E-04	1.70E-04	1.70E-04	2.08E-04	1.75E-04	1.21E-04	3.65E-04	4.15E-06	1.91E-04	2.50E-04
	B	0.0	0.0	0.0	0.0	0.0	0.0	0.0	0.0	0.0	0.0	4.89E-04
	T	2.43E-05	3.96E-04	1.70E-04	1.70E-04	2.08E-04	1.75E-04	1.21E-04	3.65E-04	4.15E-06	1.91E-04	7.40E-04
MUSCLE*	G	3.37E-04	3.03E-04	1.91E-04	1.91E-04	2.24E-04	1.77E-04	1.61E-04	2.51E-04	2.13E-04	2.34E-04	2.47E-04
	B	0.0	0.0	0.0	0.0	0.0	0.0	0.0	0.0	0.0	0.0	4.89E-04
	T	3.37E-04	3.03E-04	1.91E-04	1.91E-04	2.24E-04	1.77E-04	1.61E-04	2.51E-04	2.13E-04	2.34E-04	7.37E-04
OVARIES	G	1.29E-01	1.27E-04	1.73E-04	1.73E-04	5.27E-04	1.54E-04	8.33E-05	1.32E-04	9.95E-49	4.21E-06	2.57E-04
	B	3.11E 00	0.0	0.0	0.0	0.0	0.0	0.0	0.0	0.0	0.0	4.89E-04
	T	3.24E 00	1.27E-04	1.73E-04	1.73E-04	5.27E-04	1.54E-04	8.33E-05	1.32E-04	9.95E-49	4.21E-06	7.47E-04

38-STRONTIUM-91 CONTINUED

TARGET ORGANS		SOURCE ORGANS										
		OVARIES	PANCREAS	COR BONE	CAN BONE	R MARROW	Y MARROW	SKIN	SPLEEN	TESTES	THYROID	T BODY
PANCREAS	G	1.31E-04	3.57E-02	1.66E-04	1.66E-04	2.39E-04	1.96E-04	9.24E-05	3.15E-03	1.36E-05	1.37E-05	2.86E-04
	B	0.0	3.43E-01	0.0	0.0	0.0	0.0	0.0	0.0	0.0	0.0	4.89E-04
	T	1.31E-04	3.78E-01	1.66E-04	1.66E-04	2.39E-04	1.96E-04	9.24E-05	3.15E-03	1.36E-05	1.37E-05	7.75E-04
SKELETON BONE	G	1.54E-04	1.53E-04	5.85E-04	5.85E-04	3.90E-04	4.35E-04	1.47E-04	1.31E-04	1.13E-04	1.27E-04	2.50E-04
	B	0.0	0.0	6.85E-03	4.01E-03	1.89E-03	0.0	0.0	0.0	0.0	0.0	4.89E-04
	T	1.54E-04	1.53E-04	7.44E-03	4.60E-03	2.28E-03	4.35E-04	1.47E-04	1.31E-04	1.13E-04	1.27E-04	7.39E-04
R MARROW	G	5.05E-04	2.87E-04	5.26E-04	5.26E-04	1.24E-03	4.50E-04	1.37E-04	1.92E-04	8.90E-05	1.39E-04	2.75E-04
	B	0.0	0.0	4.37E-04	9.46E-03	1.65E-02	0.0	0.0	0.0	0.0	0.0	4.89E-04
	T	5.05E-04	2.87E-04	9.63E-04	9.99E-03	1.78E-02	4.50E-04	1.37E-04	1.92E-04	8.90E-05	1.39E-04	7.65E-04
Y MARROW	G	2.04E-04	1.80E-04	5.06E-04	5.06E-04	4.81E-04	7.38E-04	1.56E-04	1.95E-04	4.90E-05	6.83E-05	2.34E-04
	B	0.0	0.0	0.0	0.0	0.0	2.28E-02	0.0	0.0	0.0	0.0	4.89E-04
	T	2.04E-04	1.80E-04	5.06E-04	5.06E-04	4.81E-04	2.36E-02	1.56E-04	1.95E-04	4.90E-05	6.83E-05	7.23E-04
T E CL	G	1.54E-04	1.53E-04	5.85E-04	5.85E-04	5.25E-04	4.80E-04	1.47E-04	1.31E-04	1.13E-04	1.27E-04	2.50E-04
	B	0.0	0.0	4.28E-03	6.49E-03	7.09E-03	5.71E-03	0.0	0.0	0.0	0.0	4.89E-04
	T	1.54E-04	1.53E-04	4.87E-03	7.08E-03	7.62E-03	6.19E-03	1.47E-04	1.31E-04	1.13E-04	1.27E-04	7.39E-04
SKIN	G	9.49E-05	9.34E-05	1.50E-04	1.50E-04	1.30E-04	1.66E-04	3.55E-04	1.11E-04	2.71E-04	1.55E-04	1.60E-04
	B	0.0	0.0	0.0	0.0	0.0	0.0	1.32E-02	0.0	0.0	0.0	4.89E-04
	T	9.49E-05	9.34E-05	1.50E-04	1.50E-04	1.30E-04	1.66E-04	1.35E-02	1.11E-04	2.71E-04	1.55E-04	6.49E-04
SPLEEN	G	1.12E-04	3.13E-03	1.48E-04	1.48E-04	1.63E-04	1.83E-04	1.26E-04	2.18E-02	1.63E-05	3.04E-05	3.01E-04
	B	0.0	0.0	0.0	0.0	0.0	0.0	0.0	1.90E-01	0.0	0.0	4.89E-04
	T	1.12E-04	3.13E-03	1.48E-04	1.48E-04	1.63E-04	1.83E-04	1.26E-04	2.12E-01	1.63E-05	3.04E-05	7.90E-04
TESTES	G	9.95E-49	1.72E-05	1.09E-04	1.09E-04	7.32E-05	1.61E-04	1.53E-04	1.86E-05	6.08E-02	9.97E-07	3.07E-04
	B	0.0	0.0	0.0	0.0	0.0	0.0	0.0	0.0	9.79E-01	0.0	4.89E-04
	T	9.95E-49	1.72E-05	1.09E-04	1.09E-04	7.32E-05	1.61E-04	1.53E-04	1.86E-05	1.04E 00	9.97E-07	7.96E-04
THYMUS	G	1.24E-05	9.27E-05	1.37E-04	1.37E-04	1.02E-04	7.20E-05	1.36E-04	1.02E-04	2.75E-06	6.96E-04	2.40E-04
	B	0.0	0.0	0.0	0.0	0.0	0.0	0.0	0.0	0.0	0.0	4.89E-04
	T	1.24E-05	9.27E-05	1.37E-04	1.37E-04	1.02E-04	7.20E-05	1.36E-04	1.02E-04	2.75E-06	6.96E-04	7.30E-04
THYROID	G	4.21E-06	1.86E-05	1.37E-04	1.37E-04	1.59E-04	8.60E-05	1.34E-04	2.78E-05	9.98E-07	8.17E-02	2.59E-04
	B	0.0	0.0	0.0	0.0	0.0	0.0	0.0	0.0	0.0	1.71E 00	4.89E-04
	T	4.21E-06	1.86E-05	1.37E-04	1.37E-04	1.59E-04	8.60E-05	1.34E-04	2.78E-05	9.98E-07	1.79E 00	7.48E-04
UTERUS	G	2.90E-03	1.06E-04	1.32E-04	1.32E-04	2.97E-04	1.15E-04	1.17E-04	9.33E-05	9.95E-49	4.02E-06	3.58E-04
	B	0.0	0.0	0.0	0.0	0.0	0.0	0.0	0.0	0.0	0.0	4.89E-04
	T	2.90E-03	1.06E-04	1.32E-04	1.32E-04	2.97E-04	1.15E-04	1.17E-04	9.33E-05	9.95E-49	4.02E-06	8.48E-04
T BODY	G	3.37E-04	3.29E-04	2.45E-04	2.45E-04	2.71E-04	2.19E-04	1.61E-04	2.87E-04	2.44E-04	2.23E-04	2.47E-04
	B	4.89E-04	4.89E-04	4.89E-04	4.89E-04	4.89E-04	4.89E-04	4.89E-04	4.89E-04	4.89E-04	4.89E-04	4.89E-04
	T	8.26E-04	8.19E-04	7.34E-04	7.34E-04	7.61E-04	7.08E-04	6.50E-04	7.76E-04	7.34E-04	7.12E-04	7.36E-04

*"MUSCLE" VALUES MAY BE USED FOR "SEPARABLE FAT" WITH ADJUSTMENT (SEE TEXT)
PRINCIPLE REFERENCE-NUCLEAR DATA B8, NO. 6 (1972)
DATE DECAY DATA REVIEWED-AUGUST 1974

S, AVERAGE DOSE EQUIVALENT PER UNIT ACCUMULATED ACTIVITY (REM/UCI-DAY), FOR 38-STRONTIUM-92 (TR=2.600E 00 HOURS)

DATE OF TABLE 11-27-74

TARGET ORGANS		SOURCE ORGANS										
		ADRENALS	BLAD CON	S CONT	SI+CONT	ULI CONT	LLI CONT	KIDNEYS	LIVER	LUNG	RESP LYM NODE	MUSCLE*
ADRENALS	G	8.98E-02	5.40E-05	6.62E-04	2.42E-04	2.34E-04	1.02E-04	2.39E-03	9.15E-04	4.15E-04	4.15E-04	3.09E-04
	B	7.86E-01	0.0	0.0	0.0	0.0	0.0	0.0	0.0	0.0	0.0	0.0
	T	8.76E-01	5.40E-05	6.62E-04	2.42E-04	2.34E-04	1.02E-04	2.39E-03	9.15E-04	4.15E-04	4.15E-04	3.09E-04
BLAD WALL	G	5.41E-05	1.36E-02	9.77E-05	6.26E-04	3.51E-04	1.24E-03	9.61E-05	5.03E-05	2.09E-05	2.09E-05	3.55E-04
	B	0.0	2.75E-02	0.0	0.0	0.0	0.0	0.0	0.0	0.0	0.0	0.0
	T	5.41E-05	4.12E-02	9.77E-05	6.26E-04	3.51E-04	1.24E-03	9.61E-05	5.03E-05	2.09E-05	2.09E-05	3.55E-04
GI TRACT S WALL	G	5.53E-04	9.27E-05	9.85E-03	7.08E-04	6.49E-04	3.11E-04	5.85E-04	3.95E-04	3.99E-04	3.99E-04	2.86E-04
	B	0.0	0.0	2.20E-02	0.0	0.0	0.0	0.0	0.0	0.0	0.0	0.0
	T	5.53E-04	9.27E-05	3.19E-02	7.08E-04	6.49E-04	3.11E-04	5.85E-04	3.95E-04	3.99E-04	3.99E-04	2.86E-04
SI+CONT	G	2.16E-04	5.39E-04	4.90E-04	5.95E-03	3.02E-03	1.74E-03	5.77E-04	3.30E-04	6.74E-05	6.74E-05	3.10E-04
	B	0.0	0.0	0.0	1.38E-02	0.0	0.0	0.0	0.0	0.0	0.0	0.0
	T	2.16E-04	5.39E-04	4.90E-04	1.97E-02	3.02E-03	1.74E-03	5.77E-04	3.30E-04	6.74E-05	6.74E-05	3.10E-04
ULI WALL	G	2.01E-04	4.00E-04	7.18E-04	4.41E-03	8.28E-03	8.58E-04	5.95E-04	4.43E-04	9.18E-05	9.18E-05	3.28E-04
	B	0.0	0.0	0.0	0.0	2.50E-02	0.0	0.0	0.0	0.0	0.0	0.0
	T	2.01E-04	4.00E-04	7.18E-04	4.41E-03	3.33E-02	8.58E-04	5.95E-04	4.43E-04	9.18E-05	9.18E-05	3.28E-04
LLI WALL	G	7.52E-05	1.39E-03	2.91E-04	1.34E-03	5.94E-04	9.98E-03	2.09E-04	7.40E-05	1.56E-05	1.56E-05	3.39E-04
	B	0.0	0.0	0.0	0.0	0.0	4.08E-02	0.0	0.0	0.0	0.0	0.0
	T	7.52E-05	1.39E-03	2.91E-04	1.34E-03	5.94E-04	5.07E-02	2.09E-04	7.40E-05	1.56E-05	1.56E-05	3.39E-04
KIDNEYS	G	2.07E-03	9.96E-05	6.49E-04	5.88E-04	5.68E-04	1.94E-04	1.40E-02	7.44E-04	2.26E-04	2.26E-04	2.92E-04
	B	0.0	0.0	0.0	0.0	0.0	0.0	3.55E-02	0.0	0.0	0.0	0.0
	T	2.07E-03	9.96E-05	6.49E-04	5.88E-04	5.68E-04	1.94E-04	4.95E-02	7.44E-04	2.26E-04	2.26E-04	2.92E-04
LIVER	G	9.46E-04	6.27E-05	4.01E-04	3.73E-04	5.03E-04	9.28E-05	7.57E-04	4.93E-03	4.74E-04	4.74E-04	2.27E-04
	B	0.0	0.0	0.0	0.0	0.0	0.0	0.0	6.11E-03	0.0	0.0	0.0
	T	9.46E-04	6.27E-05	4.01E-04	3.73E-04	5.03E-04	9.28E-05	7.57E-04	1.10E-02	4.74E-04	4.74E-04	2.27E-04
LUNGS	G	4.84E-04	1.92E-05	3.59E-04	7.03E-05	9.09E-05	3.51E-05	1.97E-04	5.01E-04	2.83E-03	2.83E-03	2.66E-04
	B	0.0	0.0	0.0	0.0	0.0	0.0	0.0	0.0	1.10E-02	1.10E-02	0.0
	T	4.84E-04	1.92E-05	3.59E-04	7.03E-05	9.09E-05	3.51E-05	1.97E-04	5.01E-04	1.38E-02	1.38E-02	2.66E-04
RESP LYM NODE	G	4.84E-04	1.92E-05	3.59E-04	7.03E-05	9.09E-05	3.51E-05	1.97E-04	5.01E-04	2.83E-03	2.83E-03	2.66E-04
	B	0.0	0.0	0.0	0.0	0.0	0.0	0.0	0.0	1.10E-02	7.34E-01	0.0
	T	4.84E-04	1.92E-05	3.59E-04	7.03E-05	9.09E-05	3.51E-05	1.97E-04	5.01E-04	1.38E-02	7.37E-01	2.66E-04
MUSCLE*	G	3.09E-04	3.55E-04	2.86E-04	3.10E-04	2.98E-04	3.39E-04	2.92E-04	2.27E-04	2.66E-04	2.66E-04	3.06E-04
	B	0.0	0.0	0.0	0.0	0.0	0.0	0.0	0.0	0.0	0.0	3.93E-04
	T	3.09E-04	3.55E-04	2.86E-04	3.10E-04	2.98E-04	3.39E-04	2.92E-04	2.27E-04	2.66E-04	2.66E-04	6.99E-04
OVARIES	G	4.46E-05	1.33E-03	2.27E-04	1.68E-03	1.31E-03	3.33E-03	2.73E-04	2.03E-04	3.75E-05	3.75E-05	3.94E-04
	B	0.0	0.0	0.0	0.0	0.0	0.0	0.0	0.0	0.0	0.0	0.0
	T	4.46E-05	1.33E-03	2.27E-04	1.68E-03	1.31E-03	3.33E-03	2.73E-04	2.03E-04	3.75E-05	3.75E-05	3.94E-04

38-STRONTIUM-92 CONTINUED

SOURCE ORGANS

TARGET ORGANS		ADRENALS	BLAD CON	S CONT	SI+CONT	ULI CONT	LLI CONT	KIDNEYS	LIVER	LUNG	RESP LYM NODE	MUSCLE*
PANCREAS	G	1.71E-03	5.50E-05	3.30E-03	3.54E-04	4.16E-04	1.37E-04	1.31E-03	8.07E-04	4.81E-04	4.81E-04	3.55E-04
	B	0.0	0.0	0.0	0.0	0.0	0.0	0.0	0.0	0.0	0.0	0.0
	T	1.71E-03	5.50E-05	3.30E-03	3.54E-04	4.16E-04	1.37E-04	1.31E-03	8.07E-04	4.81E-04	4.81E-04	3.55E-04
SKELETON BONE	G	2.66E-04	1.12E-04	1.18E-04	1.55E-04	1.39E-04	2.00E-04	1.95E-04	1.47E-04	1.91E-04	1.91E-04	2.30E-04
	B	0.0	0.0	0.0	0.0	0.0	0.0	0.0	0.0	0.0	0.0	0.0
	T	2.66E-04	1.12E-04	1.18E-04	1.55E-04	1.39E-04	2.00E-04	1.95E-04	1.47E-04	1.91E-04	1.91E-04	2.30E-04
R MARROW	G	4.67E-04	2.30E-04	1.93E-04	4.71E-04	3.99E-04	5.83E-04	4.87E-04	2.10E-04	2.44E-04	2.44E-04	2.57E-04
	B	0.0	0.0	0.0	0.0	0.0	0.0	0.0	0.0	0.0	0.0	0.0
	T	4.67E-04	2.30E-04	1.93E-04	4.71E-04	3.99E-04	5.83E-04	4.87E-04	2.10E-04	2.44E-04	2.44E-04	2.57E-04
Y MARROW	G	2.59E-04	1.03E-04	1.66E-04	2.11E-04	1.97E-04	2.48E-04	2.40E-04	2.19E-04	1.96E-04	1.96E-04	2.10E-04
	B	0.0	0.0	0.0	0.0	0.0	0.0	0.0	0.0	0.0	0.0	0.0
	T	2.59E-04	1.03E-04	1.66E-04	2.11E-04	1.97E-04	2.48E-04	2.40E-04	2.19E-04	1.96E-04	1.96E-04	2.10E-04
T E CL	G	2.66E-04	1.12E-04	1.18E-04	1.55E-04	1.39E-04	2.00E-04	1.95E-04	1.47E-04	1.91E-04	1.91E-04	2.30E-04
	B	0.0	0.0	0.0	0.0	0.0	0.0	0.0	0.0	0.0	0.0	0.0
	T	2.66E-04	1.12E-04	1.18E-04	1.55E-04	1.39E-04	2.00E-04	1.95E-04	1.47E-04	1.91E-04	1.91E-04	2.30E-04
SKIN	G	1.57E-04	1.45E-04	1.28E-04	1.26E-04	1.20E-04	1.40E-04	1.39E-04	1.31E-04	1.46E-04	1.46E-04	1.94E-04
	B	0.0	0.0	0.0	0.0	0.0	0.0	0.0	0.0	0.0	0.0	0.0
	T	1.57E-04	1.45E-04	1.28E-04	1.26E-04	1.20E-04	1.40E-04	1.39E-04	1.31E-04	1.46E-04	1.46E-04	1.94E-04
SPLEEN	G	1.14E-03	4.46E-05	1.85E-03	3.37E-04	3.02E-04	2.05E-04	1.61E-03	2.05E-04	3.76E-04	3.76E-04	2.98E-04
	B	0.0	0.0	0.0	0.0	0.0	0.0	0.0	0.0	0.0	0.0	0.0
	T	1.14E-03	4.46E-05	1.85E-03	3.37E-04	3.02E-04	2.05E-04	1.61E-03	2.05E-04	3.76E-04	3.76E-04	2.98E-04
TESTES	G	2.06E-05	8.79E-04	3.72E-05	1.21E-04	9.42E-05	3.14E-04	3.78E-05	3.68E-05	8.76E-06	8.76E-06	2.58E-04
	B	0.0	0.0	0.0	0.0	0.0	0.0	0.0	0.0	0.0	0.0	0.0
	T	2.06E-05	8.79E-04	3.72E-05	1.21E-04	9.42E-05	3.14E-04	3.78E-05	3.68E-05	8.76E-06	8.76E-06	2.58E-04
THYMUS	G	1.31E-04	1.10E-05	1.54E-04	3.53E-05	3.79E-05	1.72E-05	5.85E-05	1.48E-04	8.73E-04	8.73E-04	4.16E-04
	B	0.0	0.0	0.0	0.0	0.0	0.0	0.0	0.0	0.0	0.0	0.0
	T	1.31E-04	1.10E-05	1.54E-04	3.53E-05	3.79E-05	1.72E-05	5.85E-05	1.48E-04	8.73E-04	8.73E-04	4.16E-04
THYROID	G	5.22E-05	4.38E-06	3.80E-05	1.30E-05	1.37E-05	6.90E-06	2.59E-05	4.42E-05	2.10E-04	2.10E-04	2.75E-04
	B	0.0	0.0	0.0	0.0	0.0	0.0	0.0	0.0	0.0	0.0	0.0
	T	5.22E-05	4.38E-06	3.80E-05	1.30E-05	1.37E-05	6.90E-06	2.59E-05	4.42E-05	2.10E-04	2.10E-04	2.75E-04
UTERUS	G	1.03E-04	2.69E-03	2.10E-04	1.62E-03	9.95E-04	1.15E-03	2.21E-04	1.20E-04	5.04E-05	5.04E-05	4.03E-04
	B	0.0	0.0	0.0	0.0	0.0	0.0	0.0	0.0	0.0	0.0	0.0
	T	1.03E-04	2.69E-03	2.10E-04	1.62E-03	9.95E-04	1.15E-03	2.21E-04	1.20E-04	5.04E-05	5.04E-05	4.03E-04
T BODY	G	3.36E-04	3.69E-04	3.54E-04	3.88E-04	3.79E-04	3.78E-04	3.41E-04	3.39E-04	2.87E-04	2.87E-04	2.92E-04
	B	1.57E-04	1.77E-05	4.72E-05	1.26E-04	7.50E-05	9.32E-05	1.57E-04	1.57E-04	1.57E-04	1.57E-04	1.57E-04
	T	4.94E-04	3.87E-04	4.01E-04	5.14E-04	4.54E-04	4.71E-04	4.98E-04	4.96E-04	4.44E-04	4.44E-04	4.49E-04

CONTINUED NEXT PAGE

38-STRONTIUM-92 CONTINUED

SOURCE ORGANS

TARGET ORGANS		OVARIES	PANCREAS	COR BONE	CAN BONE	R MARROW	Y MARROW	SKIN	SPLEEN	TESTES	THYROID	T BODY
ADRENALS	G	1.14E-04	1.52E-03	4.10E-04	4.10E-04	4.80E-04	2.30E-04	1.81E-04	1.32E-03	2.06E-05	4.74E-05	5.67E-04
	B	0.0	0.0	0.0	0.0	0.0	0.0	0.0	0.0	0.0	0.0	1.57E-04
	T	1.14E-04	1.52E-03	4.10E-04	4.10E-04	4.80E-04	2.30E-04	1.81E-04	1.32E-03	2.06E-05	4.74E-05	7.24E-04
BLAD WALL	G	1.36E-03	5.52E-05	1.45E-04	1.45E-04	2.40E-04	8.52E-05	1.72E-04	6.28E-05	9.54E-04	4.40E-06	3.82E-04
	B	0.0	0.0	0.0	0.0	0.0	0.0	0.0	0.0	0.0	0.0	1.57E-04
	T	1.36E-03	5.52E-05	1.45E-04	1.45E-04	2.40E-04	8.52E-05	1.72E-04	6.28E-05	9.54E-04	4.40E-06	5.39E-04
GI TRACT S WALL	G	1.96E-04	3.28E-03	1.20E-04	1.20E-04	2.34E-04	1.49E-04	1.35E-04	1.99E-03	2.38E-05	3.80E-05	2.89E-04
	B	0.0	0.0	0.0	0.0	0.0	0.0	0.0	0.0	0.0	0.0	1.57E-04
	T	1.96E-04	3.28E-03	1.20E-04	1.20E-04	2.34E-04	1.49E-04	1.35E-04	1.99E-03	2.38E-05	3.80E-05	4.47E-04
SI+CONT	G	2.20E-03	3.67E-04	1.60E-04	1.60E-04	4.97E-04	2.10E-04	1.26E-04	2.99E-04	1.15E-04	1.12E-05	3.86E-04
	B	0.0	0.0	0.0	0.0	0.0	0.0	0.0	0.0	0.0	0.0	1.57E-04
	T	2.20E-03	3.67E-04	1.60E-04	1.60E-04	4.97E-04	2.10E-04	1.26E-04	2.99E-04	1.15E-04	1.12E-05	5.43E-04
ULI WALL	G	2.09E-03	4.43E-04	1.55E-04	1.55E-04	3.80E-04	2.02E-04	1.22E-04	2.97E-04	7.85E-05	1.32E-05	3.57E-04
	B	0.0	0.0	0.0	0.0	0.0	0.0	0.0	0.0	0.0	0.0	1.57E-04
	T	2.09E-03	4.43E-04	1.55E-04	1.55E-04	3.80E-04	2.02E-04	1.22E-04	2.97E-04	7.85E-05	1.32E-05	5.14E-04
LLI WALL	G	2.64E-03	1.42E-04	2.05E-04	2.05E-04	5.70E-04	1.96E-04	1.29E-04	1.36E-04	5.04E-04	6.01E-06	3.88E-04
	B	0.0	0.0	0.0	0.0	0.0	0.0	0.0	0.0	0.0	0.0	1.57E-04
	T	2.64E-03	1.42E-04	2.05E-04	2.05E-04	5.70E-04	1.96E-04	1.29E-04	1.36E-04	5.04E-04	6.01E-06	5.45E-04
KIDNEYS	G	2.20E-04	1.20E-03	2.18E-04	2.18E-04	5.14E-04	2.36E-04	1.57E-04	1.65E-03	3.50E-05	3.48E-05	3.33E-04
	B	0.0	0.0	0.0	0.0	0.0	0.0	0.0	0.0	0.0	0.0	1.57E-04
	T	2.20E-04	1.20E-03	2.18E-04	2.18E-04	5.14E-04	2.36E-04	1.57E-04	1.65E-03	3.50E-05	3.48E-05	4.90E-04
LIVER	G	1.39E-04	7.98E-04	1.50E-04	1.50E-04	2.15E-04	2.29E-04	1.43E-04	2.24E-04	2.55E-05	4.54E-05	3.39E-04
	B	0.0	0.0	0.0	0.0	0.0	0.0	0.0	0.0	0.0	0.0	1.57E-04
	T	1.39E-04	7.98E-04	1.50E-04	1.50E-04	2.15E-04	2.29E-04	1.43E-04	2.24E-04	2.55E-05	4.54E-05	4.97E-04
LUNGS	G	3.55E-05	4.49E-04	2.00E-04	2.00E-04	2.58E-04	2.16E-04	1.51E-04	4.13E-04	9.16E-06	2.24E-04	2.71E-04
	B	0.0	0.0	0.0	0.0	0.0	0.0	0.0	0.0	0.0	0.0	1.57E-04
	T	3.55E-05	4.49E-04	2.00E-04	2.00E-04	2.58E-04	2.16E-04	1.51E-04	4.13E-04	9.16E-06	2.24E-04	4.28E-04
RESP LYM NODE	G	3.55E-05	4.49E-04	2.00E-04	2.00E-04	2.58E-04	2.16E-04	1.51E-04	4.13E-04	9.16E-06	2.24E-04	2.71E-04
	B	0.0	0.0	0.0	0.0	0.0	0.0	0.0	0.0	0.0	0.0	1.57E-04
	T	3.55E-05	4.49E-04	2.00E-04	2.00E-04	2.58E-04	2.16E-04	1.51E-04	4.13E-04	9.16E-06	2.24E-04	4.28E-04
MUSCLE*	G	3.94E-04	3.55E-04	2.30E-04	2.30E-04	2.67E-04	2.10E-04	1.94E-04	2.98E-04	2.58E-04	2.75E-04	2.92E-04
	B	0.0	0.0	0.0	0.0	0.0	0.0	0.0	0.0	0.0	0.0	1.57E-04
	T	3.94E-04	3.55E-04	2.30E-04	2.30E-04	2.67E-04	2.10E-04	1.94E-04	2.98E-04	2.58E-04	2.75E-04	4.49E-04
OVARIES	G	1.50E-01	1.69E-04	1.86E-04	1.86E-04	6.84E-04	1.94E-04	1.18E-04	1.33E-04	0.0	7.11E-06	3.84E-04
	B	1.00E 00	0.0	0.0	0.0	0.0	0.0	0.0	0.0	0.0	0.0	1.57E-04
	T	1.15E 00	1.69E-04	1.86E-04	1.86E-04	6.84E-04	1.94E-04	1.18E-04	1.33E-04	0.0	7.11E-06	5.41E-04

38-STRONTIUM-92 CONTINUED

TARGET ORGANS		SOURCE ORGANS										
		OVARIES	PANCREAS	COR BONE	CAN BONE	R MARROW	Y MARROW	SKIN	SPLEEN	TESTES	THYROID	T BODY
PANCREAS	G	1.37E-04	4.16E-02	2.32E-04	2.32E-04	2.52E-04	2.18E-04	1.12E-04	3.44E-03	2.72E-05	7.32E-05	3.24E-04
	B	0.0	1.10E-01	0.0	0.0	0.0	0.0	0.0	0.0	0.0	0.0	1.57E-04
	T	1.37E-04	1.52E-01	2.32E-04	2.32E-04	2.52E-04	2.18E-04	1.12E-04	3.44E-03	2.72E-05	7.32E-05	4.82E-04
SKELETON BONE	G	1.78E-04	1.82E-04	6.71E-04	6.71E-04	4.48E-04	5.04E-04	1.78E-04	1.55E-04	1.32E-04	1.52E-04	2.86E-04
	B	0.0	0.0	2.20E-03	1.45E-03	5.00E-04	0.0	0.0	0.0	0.0	0.0	1.57E-04
	T	1.78E-04	1.82E-04	2.87E-03	2.12E-03	9.49E-04	5.04E-04	1.78E-04	1.55E-04	1.32E-04	1.52E-04	4.43E-04
R MARROW	G	5.67E-04	3.37E-04	6.08E-04	6.08E-04	1.42E-03	5.13E-04	1.68E-04	2.22E-04	1.01E-04	1.66E-04	3.13E-04
	B	0.0	0.0	5.96E-05	2.50E-03	5.67E-03	0.0	0.0	0.0	0.0	0.0	1.57E-04
	T	5.67E-04	3.37E-04	6.68E-04	3.11E-03	7.09E-03	5.13E-04	1.68E-04	2.22E-04	1.01E-04	1.66E-04	4.70E-04
Y MARROW	G	2.32E-04	2.15E-04	5.77E-04	5.77E-04	5.53E-04	8.55E-04	1.90E-04	2.29E-04	5.96E-05	8.50E-05	2.65E-04
	B	0.0	0.0	0.0	0.0	0.0	7.34E-03	0.0	0.0	0.0	0.0	1.57E-04
	T	2.32E-04	2.15E-04	5.77E-04	5.77E-04	5.53E-04	8.19E-03	1.90E-04	2.29E-04	5.96E-05	8.50E-05	4.22E-04
T E CL	G	1.78E-04	1.82E-04	6.71E-04	6.71E-04	6.02E-04	5.55E-04	1.78E-04	1.55E-04	1.32E-04	1.52E-04	2.86E-04
	B	0.0	0.0	1.36E-03	2.45E-03	2.04E-03	1.83E-03	0.0	0.0	0.0	0.0	1.57E-04
	T	1.78E-04	1.82E-04	2.03E-03	3.12E-03	2.64E-03	2.39E-03	1.78E-04	1.55E-04	1.32E-04	1.52E-04	4.43E-04
SKIN	G	1.15E-04	1.16E-04	1.84E-04	1.84E-04	1.62E-04	1.93E-04	4.20E-04	1.34E-04	3.30E-04	1.92E-04	2.02E-04
	B	0.0	0.0	0.0	0.0	0.0	0.0	4.23E-03	0.0	0.0	0.0	1.57E-04
	T	1.15E-04	1.16E-04	1.84E-04	1.84E-04	1.62E-04	1.93E-04	4.65E-03	1.34E-04	3.30E-04	1.92E-04	3.59E-04
SPLEEN	G	1.12E-04	3.53E-03	1.46E-04	1.46E-04	1.99E-04	2.52E-04	1.34E-04	2.49E-02	1.50E-05	4.18E-05	3.20E-04
	B	0.0	0.0	0.0	0.0	0.0	0.0	0.0	6.11E-02	0.0	0.0	1.57E-04
	T	1.12E-04	3.53E-03	1.46E-04	1.46E-04	1.99E-04	2.52E-04	1.34E-04	8.60E-02	1.50E-05	4.18E-05	4.77E-04
TESTES	G	0.0	2.83E-05	1.50E-04	1.50E-04	5.00E-05	1.82E-04	1.98E-04	2.61E-05	6.89E-02	2.05E-06	3.29E-04
	B	0.0	0.0	0.0	0.0	0.0	0.0	0.0	0.0	3.14E-01	0.0	1.57E-04
	T	0.0	2.83E-05	1.50E-04	1.50E-04	5.00E-05	1.82E-04	1.98E-04	2.61E-05	3.83E-01	2.05E-06	4.87E-04
THYMUS	G	1.82E-05	1.32E-04	1.15E-04	1.15E-04	1.92E-04	1.47E-04	1.34E-04	6.10E-05	4.91E-06	8.38E-04	3.60E-04
	B	0.0	0.0	0.0	0.0	0.0	0.0	0.0	0.0	0.0	0.0	1.57E-04
	T	1.82E-05	1.32E-04	1.15E-04	1.15E-04	1.92E-04	1.47E-04	1.34E-04	6.10E-05	4.91E-06	8.38E-04	5.17E-04
THYROID	G	7.10E-06	3.55E-05	2.09E-04	2.09E-04	1.54E-04	1.39E-04	1.51E-04	3.72E-05	2.05E-06	9.54E-02	2.80E-04
	B	0.0	0.0	0.0	0.0	0.0	0.0	0.0	0.0	0.0	5.50E-01	1.57E-04
	T	7.10E-06	3.55E-05	2.09E-04	2.09E-04	1.54E-04	1.39E-04	1.51E-04	3.72E-05	2.05E-06	6.46E-01	4.37E-04
UTERUS	G	3.23E-03	1.23E-04	1.47E-04	1.47E-04	3.51E-04	9.94E-05	1.43E-04	6.58E-05	0.0	6.82E-06	3.73E-04
	B	0.0	0.0	0.0	0.0	0.0	0.0	0.0	0.0	0.0	0.0	1.57E-04
	T	3.23E-03	1.23E-04	1.47E-04	1.47E-04	3.51E-04	9.94E-05	1.43E-04	6.58E-05	0.0	6.82E-06	5.30E-04
T BODY	G	3.93E-04	3.86E-04	2.91E-04	2.91E-04	3.20E-04	2.59E-04	1.94E-04	3.38E-04	2.92E-04	2.64E-04	2.89E-04
	B	1.57E-04	1.57E-04	1.57E-04	1.57E-04	1.57E-04	1.57E-04	1.57E-04	1.57E-04	1.57E-04	1.57E-04	1.57E-04
	T	5.50E-04	5.44E-04	4.48E-04	4.48E-04	4.77E-04	4.16E-04	3.52E-04	4.95E-04	4.49E-04	4.21E-04	4.47E-04

*"MUSCLE" VALUES MAY BE USED FOR "SEPARABLE FAT" WITH ADJUSTMENT (SEE TEXT)
PRINCIPLE REFERENCE-LEDERER, C. M. ET AL., TABLE OF ISOTOPES, 6TH ED.
DATE DECAY DATA REVIEWED-DECEMBER 1968

S, AVERAGE DOSE EQUIVALENT PER UNIT ACCUMULATED ACTIVITY (REM/UCI-DAY), FOR 39-YTTRIUM-90M (TB=3.190E 00 HOURS)

DATE OF TABLE 11-27-74

TARGET ORGANS		SOURCE ORGANS										
		ADRENALS	BLAD CON	S CONT	SI+CONT	ULI CONT	LLI CONT	KIDNEYS	LIVER	LUNG	RESP LYM NODE	MUSCLE*
ADRENALS	G	5.21E-02	2.52E-05	2.53E-04	1.57E-04	1.11E-04	5.56E-05	1.32E-03	5.67E-04	2.78E-04	2.78E-04	1.72E-04
	B	1.77E-01	0.0	0.0	0.0	0.0	0.0	0.0	0.0	0.0	0.0	0.0
	T	2.30E-01	2.52E-05	2.53E-04	1.57E-04	1.11E-04	5.56E-05	1.32E-03	5.67E-04	2.78E-04	2.78E-04	1.72E-04
BLAD WALL	G	1.31E-05	8.36E-03	4.29E-05	3.57E-04	2.28E-04	6.80E-04	4.11E-05	3.23E-05	7.61E-06	7.61E-06	2.03E-04
	B	0.0	6.21E-03	0.0	0.0	0.0	0.0	0.0	0.0	0.0	0.0	0.0
	T	1.31E-05	1.46E-02	4.29E-05	3.57E-04	2.28E-04	6.80E-04	4.11E-05	3.23E-05	7.61E-06	7.61E-06	2.03E-04
GI TRACT S WALL	G	3.36E-04	3.56E-05	5.90E-03	3.98E-04	4.17E-04	2.06E-04	3.84E-04	2.19E-04	2.11E-04	2.11E-04	1.60E-04
	B	0.0	0.0	4.97E-03	0.0	0.0	0.0	0.0	0.0	0.0	0.0	0.0
	T	3.36E-04	3.56E-05	1.09E-02	3.98E-04	4.17E-04	2.06E-04	3.84E-04	2.19E-04	2.11E-04	2.11E-04	1.60E-04
SI+CONT	G	1.06E-04	3.09E-04	3.00E-04	3.55E-03	1.87E-03	1.04E-03	3.18E-04	1.85E-04	2.88E-05	2.88E-05	1.77E-04
	B	0.0	0.0	0.0	3.11E-03	0.0	0.0	0.0	0.0	0.0	0.0	0.0
	T	1.06E-04	3.09E-04	3.00E-04	6.65E-03	1.87E-03	1.04E-03	3.18E-04	1.85E-04	2.88E-05	2.88E-05	1.77E-04
ULI WALL	G	1.15E-04	2.70E-04	3.85E-04	2.64E-03	4.86E-03	4.83E-04	3.28E-04	2.88E-04	3.83E-05	3.83E-05	1.86E-04
	B	0.0	0.0	0.0	0.0	5.65E-03	0.0	0.0	0.0	0.0	0.0	0.0
	T	1.15E-04	2.70E-04	3.85E-04	2.64E-03	1.05E-02	4.83E-04	3.28E-04	2.88E-04	3.83E-05	3.83E-05	1.86E-04
LLI WALL	G	3.59E-05	8.08E-04	1.46E-04	7.86E-04	3.41E-04	5.84E-03	9.98E-05	3.39E-05	1.04E-05	1.04E-05	1.94E-04
	B	0.0	0.0	0.0	0.0	0.0	9.20E-03	0.0	0.0	0.0	0.0	0.0
	T	3.59E-05	8.08E-04	1.46E-04	7.86E-04	3.41E-04	1.50E-02	9.98E-05	3.39E-05	1.04E-05	1.04E-05	1.94E-04
KIDNEYS	G	1.32E-03	4.01E-05	3.85E-04	3.57E-04	3.11E-04	1.01E-04	8.28E-03	4.33E-04	1.13E-04	1.13E-04	1.62E-04
	B	0.0	0.0	0.0	0.0	0.0	0.0	8.02E-03	0.0	0.0	0.0	0.0
	T	1.32E-03	4.01E-05	3.85E-04	3.57E-04	3.11E-04	1.01E-04	1.63E-02	4.33E-04	1.13E-04	1.13E-04	1.62E-04
LIVER	G	5.61E-04	2.99E-05	2.30E-04	2.08E-04	2.87E-04	3.73E-05	4.50E-04	2.93E-03	2.75E-04	2.75E-04	1.26E-04
	B	0.0	0.0	0.0	0.0	0.0	0.0	0.0	1.38E-03	0.0	0.0	0.0
	T	5.61E-04	2.99E-05	2.30E-04	2.08E-04	2.87E-04	3.73E-05	4.50E-04	4.31E-03	2.75E-04	2.75E-04	1.26E-04
LUNGS	G	2.72E-04	4.72E-06	2.05E-04	3.52E-05	3.64E-05	1.13E-05	1.04E-04	2.77E-04	1.68E-03	1.68E-03	1.52E-04
	B	0.0	0.0	0.0	0.0	0.0	0.0	0.0	0.0	2.48E-03	2.48E-03	0.0
	T	2.72E-04	4.72E-06	2.05E-04	3.52E-05	3.64E-05	1.13E-05	1.04E-04	2.77E-04	4.16E-03	4.16E-03	1.52E-04
RESP LYM NODE	G	2.72E-04	4.72E-06	2.05E-04	3.52E-05	3.64E-05	1.13E-05	1.04E-04	2.77E-04	1.68E-03	1.68E-03	1.52E-04
	B	0.0	0.0	0.0	0.0	0.0	0.0	0.0	0.0	2.45E-03	1.66E-01	0.0
	T	2.72E-04	4.72E-06	2.05E-04	3.52E-05	3.64E-05	1.13E-05	1.04E-04	2.77E-04	4.13E-03	1.67E-01	1.52E-04
MUSCLE*	G	1.72E-04	2.03E-04	1.60E-04	1.77E-04	1.69E-04	1.94E-04	1.62E-04	1.26E-04	1.52E-04	1.52E-04	1.70E-04
	B	0.0	0.0	0.0	0.0	0.0	0.0	0.0	0.0	0.0	0.0	8.87E-05
	T	1.72E-04	2.03E-04	1.60E-04	1.77E-04	1.69E-04	1.94E-04	1.62E-04	1.26E-04	1.52E-04	1.52E-04	2.59E-04
OVARIES	G	6.42E-05	7.73E-04	5.45E-05	1.07E-03	1.41E-03	1.97E-03	1.35E-04	3.49E-05	1.64E-05	1.64E-05	2.27E-04
	B	0.0	0.0	0.0	0.0	0.0	0.0	0.0	0.0	0.0	0.0	0.0
	T	6.42E-05	7.73E-04	5.45E-05	1.07E-03	1.41E-03	1.97E-03	1.35E-04	3.49E-05	1.64E-05	1.64E-05	2.27E-04

39-YTTRIUM-90M CONTINUED

SOURCE ORGANS

TARGET ORGANS		ADRENALS	BLAD CON	S CONT	SI+CONT	ULI CONT	LLI CONT	KIDNEYS	LIVER	LUNG	RESP LYM NODE	MUSCLE*
PANCREAS	G	9.63E-04	3.19E-05	2.01E-03	2.37E-04	2.31E-04	8.37E-05	7.40E-04	5.08E-04	3.07E-04	3.07E-04	2.05E-04
	B	0.0	0.0	0.0	0.0	0.0	0.0	0.0	0.0	0.0	0.0	0.0
	T	9.63E-04	3.19E-05	2.01E-03	2.37E-04	2.31E-04	8.37E-05	7.40E-04	5.08E-04	3.07E-04	3.07E-04	2.05E-04
SKELETON BONE	G	1.65E-04	7.41E-05	7.40E-05	9.79E-05	8.94E-05	1.28E-04	1.19E-04	9.03E-05	1.20E-04	1.20E-04	1.25E-04
	B	0.0	0.0	0.0	0.0	0.0	0.0	0.0	0.0	0.0	0.0	0.0
	T	1.65E-04	7.41E-05	7.40E-05	9.79E-05	8.94E-05	1.28E-04	1.19E-04	9.03E-05	1.20E-04	1.20E-04	1.25E-04
R MARROW	G	2.98E-04	1.62E-04	1.30E-04	3.15E-04	2.72E-04	3.84E-04	3.04E-04	1.32E-04	1.52E-04	1.52E-04	1.65E-04
	B	0.0	0.0	0.0	0.0	0.0	0.0	0.0	0.0	0.0	0.0	0.0
	T	2.98E-04	1.62E-04	1.30E-04	3.15E-04	2.72E-04	3.84E-04	3.04E-04	1.32E-04	1.52E-04	1.52E-04	1.65E-04
Y MARROW	G	1.59E-04	6.80E-05	1.03E-04	1.36E-04	1.27E-04	1.58E-04	1.47E-04	1.33E-04	1.26E-04	1.26E-04	1.32E-04
	B	0.0	0.0	0.0	0.0	0.0	0.0	0.0	0.0	0.0	0.0	0.0
	T	1.59E-04	6.80E-05	1.03E-04	1.36E-04	1.27E-04	1.58E-04	1.47E-04	1.33E-04	1.26E-04	1.26E-04	1.32E-04
T E CL	G	1.65E-04	7.41E-05	7.40E-05	9.79E-05	8.94E-05	1.28E-04	1.19E-04	9.03E-05	1.20E-04	1.20E-04	1.25E-04
	B	0.0	0.0	0.0	0.0	0.0	0.0	0.0	0.0	0.0	0.0	0.0
	T	1.65E-04	7.41E-05	7.40E-05	9.79E-05	8.94E-05	1.28E-04	1.19E-04	9.03E-05	1.20E-04	1.20E-04	1.25E-04
SKIN	G	7.41E-05	7.10E-05	6.30E-05	5.80E-05	5.98E-05	6.52E-05	7.27E-05	6.62E-05	7.43E-05	7.43E-05	9.90E-05
	B	0.0	0.0	0.0	0.0	0.0	0.0	0.0	0.0	0.0	0.0	0.0
	T	7.41E-05	7.10E-05	6.30E-05	5.80E-05	5.98E-05	6.52E-05	7.27E-05	6.62E-05	7.43E-05	7.43E-05	9.90E-05
SPLEEN	G	7.44E-04	2.30E-05	1.10E-03	1.79E-04	1.47E-04	1.01E-04	9.63E-04	1.12E-04	2.50E-04	2.50E-04	1.67E-04
	B	0.0	0.0	0.0	0.0	0.0	0.0	0.0	0.0	0.0	0.0	0.0
	T	7.44E-04	2.30E-05	1.10E-03	1.79E-04	1.47E-04	1.01E-04	9.63E-04	1.12E-04	2.50E-04	2.50E-04	1.67E-04
TESTES	G	7.22E-06	5.58E-04	4.67E-06	4.16E-05	5.14E-05	2.35E-04	1.60E-05	1.20E-05	2.38E-06	2.38E-06	1.39E-04
	B	0.0	0.0	0.0	0.0	0.0	0.0	0.0	0.0	0.0	0.0	0.0
	T	7.22E-06	5.58E-04	4.67E-06	4.16E-05	5.14E-05	2.35E-04	1.60E-05	1.20E-05	2.38E-06	2.38E-06	1.39E-04
THYMUS	G	8.61E-05	3.12E-06	2.73E-05	1.48E-05	1.63E-05	5.95E-06	3.80E-05	1.25E-04	4.31E-04	4.31E-04	2.41E-04
	B	0.0	0.0	0.0	0.0	0.0	0.0	0.0	0.0	0.0	0.0	0.0
	T	8.61E-05	3.12E-06	2.73E-05	1.48E-05	1.63E-05	5.95E-06	3.80E-05	1.25E-04	4.31E-04	4.31E-04	2.41E-04
THYROID	G	2.14E-05	8.84E-07	1.63E-05	3.96E-06	4.26E-06	1.75E-06	9.85E-06	2.29E-05	1.23E-04	1.23E-04	1.55E-04
	B	0.0	0.0	0.0	0.0	0.0	0.0	0.0	0.0	0.0	0.0	0.0
	T	2.14E-05	8.84E-07	1.63E-05	3.96E-06	4.26E-06	1.75E-06	9.85E-06	2.29E-05	1.23E-04	1.23E-04	1.55E-04
UTERUS	G	1.24E-04	1.72E-03	9.99E-05	1.02E-03	5.21E-04	6.96E-04	1.06E-04	4.87E-05	1.12E-05	1.12E-05	2.34E-04
	B	0.0	0.0	0.0	0.0	0.0	0.0	0.0	0.0	0.0	0.0	0.0
	T	1.24E-04	1.72E-03	9.99E-05	1.02E-03	5.21E-04	6.96E-04	1.06E-04	4.87E-05	1.12E-05	1.12E-05	2.34E-04
T BODY	G	1.92E-04	2.14E-04	2.02E-04	2.25E-04	2.19E-04	2.18E-04	1.93E-04	1.94E-04	1.66E-04	1.66E-04	1.62E-04
	B	3.55E-05	3.99E-06	1.06E-05	2.84E-05	1.69E-05	2.10E-05	3.55E-05	3.55E-05	3.55E-05	3.55E-05	3.55E-05
	T	2.27E-04	2.18E-04	2.13E-04	2.53E-04	2.36E-04	2.39E-04	2.28E-04	2.29E-04	2.01E-04	2.01E-04	1.98E-04

CONTINUED NEXT PAGE

39-YTTRIUM-90M CONTINUED

TARGET ORGANS		SOURCE ORGANS										
		OVARIES	PANCREAS	COR BONE	CAN BONE	R MARROW	Y MARROW	SKIN	SPLEEN	TESTES	THYROID	T BODY
ADRENALS	G	6.05E-05	9.60E-04	1.76E-04	1.76E-04	2.37E-04	1.39E-04	8.32E-05	7.06E-04	7.22E-06	2.14E-05	2.45E-04
	B	0.0	0.0	0.0	0.0	0.0	0.0	0.0	0.0	0.0	0.0	3.55E-05
	T	6.05E-05	9.60E-04	1.76E-04	1.76E-04	2.37E-04	1.39E-04	8.32E-05	7.06E-04	7.22E-06	2.14E-05	2.80E-04
BLAD WALL	G	7.68E-04	2.14E-05	6.82E-05	6.82E-05	8.09E-05	3.44E-05	6.82E-05	1.70E-05	5.68E-04	8.91E-07	2.04E-04
	B	0.0	0.0	0.0	0.0	0.0	0.0	0.0	0.0	0.0	0.0	3.55E-05
	T	7.68E-04	2.14E-05	6.82E-05	6.82E-05	8.09E-05	3.44E-05	6.82E-05	1.70E-05	5.68E-04	8.91E-07	2.40E-04
GI TRACT S WALL	G	9.46E-05	1.99E-03	6.70E-05	6.70E-05	1.18E-04	8.49E-05	7.05E-05	1.11E-03	1.08E-05	1.12E-05	2.09E-04
	B	0.0	0.0	0.0	0.0	0.0	0.0	0.0	0.0	0.0	0.0	3.55E-05
	T	9.46E-05	1.99E-03	6.70E-05	6.70E-05	1.18E-04	8.49E-05	7.05E-05	1.11E-03	1.08E-05	1.12E-05	2.44E-04
SI+CONT	G	1.35E-03	2.06E-04	9.04E-05	9.04E-05	3.04E-04	1.21E-04	6.06E-05	1.60E-04	5.70E-05	1.26E-06	2.26E-04
	B	0.0	0.0	0.0	0.0	0.0	0.0	0.0	0.0	0.0	0.0	3.55E-05
	T	1.35E-03	2.06E-04	9.04E-05	9.04E-05	3.04E-04	1.21E-04	6.06E-05	1.60E-04	5.70E-05	1.26E-06	2.62E-04
ULI WALL	G	1.27E-03	2.49E-04	8.20E-05	8.20E-05	2.38E-04	1.02E-04	6.19E-05	1.53E-04	3.93E-05	1.32E-06	2.17E-04
	B	0.0	0.0	0.0	0.0	0.0	0.0	0.0	0.0	0.0	0.0	3.55E-05
	T	1.27E-03	2.49E-04	8.20E-05	8.20E-05	2.38E-04	1.02E-04	6.19E-05	1.53E-04	3.93E-05	1.32E-06	2.53E-04
LLI WALL	G	1.63E-03	6.28E-05	1.13E-04	1.13E-04	3.45E-04	9.81E-05	6.49E-05	7.77E-05	3.23E-04	1.45E-06	2.15E-04
	B	0.0	0.0	0.0	0.0	0.0	0.0	0.0	0.0	0.0	0.0	3.55E-05
	T	1.63E-03	6.28E-05	1.13E-04	1.13E-04	3.45E-04	9.81E-05	6.49E-05	7.77E-05	3.23E-04	1.45E-06	2.50E-04
KIDNEYS	G	1.24E-04	7.15E-04	1.04E-04	1.04E-04	2.67E-04	1.34E-04	8.17E-05	9.84E-04	9.96E-06	5.35E-06	2.00E-04
	B	0.0	0.0	0.0	0.0	0.0	0.0	0.0	0.0	0.0	0.0	3.55E-05
	T	1.24E-04	7.15E-04	1.04E-04	1.04E-04	2.67E-04	1.34E-04	8.17E-05	9.84E-04	9.96E-06	5.35E-06	2.35E-04
LIVER	G	6.94E-05	4.79E-04	7.96E-05	7.96E-05	1.15E-04	1.21E-04	7.33E-05	1.21E-04	5.60E-06	1.68E-05	1.95E-04
	B	0.0	0.0	0.0	0.0	0.0	0.0	0.0	0.0	0.0	0.0	3.55E-05
	T	6.94E-05	4.79E-04	7.96E-05	7.96E-05	1.15E-04	1.21E-04	7.33E-05	1.21E-04	5.60E-06	1.68E-05	2.30E-04
LUNGS	G	1.14E-05	2.77E-04	1.12E-04	1.12E-04	1.38E-04	1.13E-04	7.62E-05	2.52E-04	1.60E-06	1.17E-04	1.72E-04
	B	0.0	0.0	0.0	0.0	0.0	0.0	0.0	0.0	0.0	0.0	3.55E-05
	T	1.14E-05	2.77E-04	1.12E-04	1.12E-04	1.38E-04	1.13E-04	7.62E-05	2.52E-04	1.60E-06	1.17E-04	2.07E-04
RESP LYM NODE	G	1.14E-05	2.77E-04	1.12E-04	1.12E-04	1.38E-04	1.13E-04	7.62E-05	2.52E-04	1.60E-06	1.17E-04	1.72E-04
	B	0.0	0.0	0.0	0.0	0.0	0.0	0.0	0.0	0.0	0.0	3.55E-05
	T	1.14E-05	2.77E-04	1.12E-04	1.12E-04	1.38E-04	1.13E-04	7.62E-05	2.52E-04	1.60E-06	1.17E-04	2.07E-04
MUSCLE*	G	2.27E-04	2.05E-04	1.25E-04	1.25E-04	1.48E-04	1.14E-04	9.90E-05	1.67E-04	1.39E-04	1.55E-04	1.62E-04
	B	0.0	0.0	0.0	0.0	0.0	0.0	0.0	0.0	0.0	0.0	3.55E-05
	T	2.27E-04	2.05E-04	1.25E-04	1.25E-04	1.48E-04	1.14E-04	9.90E-05	1.67E-04	1.39E-04	1.55E-04	1.98E-04
OVARIES	G	8.76E-02	4.09E-05	1.08E-04	1.08E-04	3.57E-04	1.19E-04	4.24E-05	1.02E-04	3.87E-48	1.72E-06	2.01E-04
	B	2.26E-01	0.0	0.0	0.0	0.0	0.0	0.0	0.0	0.0	0.0	3.55E-05
	T	3.14E-01	4.09E-05	1.08E-04	1.08E-04	3.57E-04	1.19E-04	4.24E-05	1.02E-04	3.87E-48	1.72E-06	2.37E-04

39-YTTRIUM-90M CONTINUED

TARGET ORGANS		SOURCE ORGANS										
		OVARIES	PANCREAS	COR BONE	CAN BONE	R MARROW	Y MARROW	SKIN	SPLEEN	TESTES	THYROID	T BODY
PANCREAS	G	6.07E-05	2.41E-02	1.11E-04	1.11E-04	1.93E-04	1.51E-04	6.70E-05	2.18E-03	6.08E-06	9.73E-06	2.16E-04
	B	0.0	2.48E-02	0.0	0.0	0.0	0.0	0.0	0.0	0.0	0.0	3.55E-05
	T	6.07E-05	4.89E-02	1.11E-04	1.11E-04	1.93E-04	1.51E-04	6.70E-05	2.18E-03	6.08E-06	9.73E-06	2.52E-04
SKELETON BONE	G	1.15E-04	1.13E-04	4.07E-04	4.07E-04	2.72E-04	2.99E-04	9.70E-05	9.35E-05	7.99E-05	8.97E-05	1.77E-04
	B	0.0	0.0	4.97E-04	3.05E-04	1.28E-04	0.0	0.0	0.0	0.0	0.0	3.55E-05
	T	1.15E-04	1.13E-04	9.04E-04	7.13E-04	4.00E-04	2.99E-04	9.70E-05	9.35E-05	7.99E-05	8.97E-05	2.12E-04
R MARROW	G	3.89E-04	2.15E-04	3.63E-04	3.63E-04	8.73E-04	3.10E-04	9.11E-05	1.41E-04	6.44E-05	9.90E-05	1.97E-04
	B	0.0	0.0	1.91E-05	6.38E-04	1.23E-03	0.0	0.0	0.0	0.0	0.0	3.55E-05
	T	3.89E-04	2.15E-04	3.82E-04	1.00E-03	2.10E-03	3.10E-04	9.11E-05	1.41E-04	6.44E-05	9.90E-05	2.33E-04
Y MARROW	G	1.54E-04	1.33E-04	3.51E-04	3.51E-04	3.35E-04	5.09E-04	1.02E-04	1.40E-04	3.33E-05	4.74E-05	1.65E-04
	B	0.0	0.0	0.0	0.0	0.0	1.66E-03	0.0	0.0	0.0	0.0	3.55E-05
	T	1.54E-04	1.33E-04	3.51E-04	3.51E-04	3.35E-04	2.17E-03	1.02E-04	1.40E-04	3.33E-05	4.74E-05	2.00E-04
T E CL	G	1.15E-04	1.13E-04	4.07E-04	4.07E-04	3.67E-04	3.31E-04	9.70E-05	9.35E-05	7.99E-05	8.97E-05	1.77E-04
	B	0.0	0.0	3.14E-04	5.28E-04	4.76E-04	4.14E-04	0.0	0.0	0.0	0.0	3.55E-05
	T	1.15E-04	1.13E-04	7.21E-04	9.35E-04	8.44E-04	7.45E-04	9.70E-05	9.35E-05	7.99E-05	8.97E-05	2.12E-04
SKIN	G	5.75E-05	5.54E-05	9.45E-05	9.45E-05	8.31E-05	1.05E-04	2.24E-04	6.74E-05	1.76E-04	9.65E-05	9.89E-05
	B	0.0	0.0	0.0	0.0	0.0	0.0	9.56E-04	0.0	0.0	0.0	3.55E-05
	T	5.75E-05	5.54E-05	9.45E-05	9.45E-05	8.31E-05	1.05E-04	1.18E-03	6.74E-05	1.76E-04	9.65E-05	1.34E-04
SPLEEN	G	7.43E-05	2.17E-03	8.86E-05	8.86E-05	9.72E-05	1.16E-04	7.22E-05	1.48E-02	1.07E-05	1.44E-05	2.03E-04
	B	0.0	0.0	0.0	0.0	0.0	0.0	0.0	1.38E-02	0.0	0.0	3.55E-05
	T	7.43E-05	2.17E-03	8.86E-05	8.86E-05	9.72E-05	1.16E-04	7.22E-05	2.86E-02	1.07E-05	1.44E-05	2.39E-04
TESTES	G	3.87E-48	7.87E-06	6.86E-05	6.86E-05	4.45E-05	1.16E-04	1.05E-04	9.94E-06	4.07E-02	3.08E-07	1.84E-04
	B	0.0	0.0	0.0	0.0	0.0	0.0	0.0	0.0	7.10E-02	0.0	3.55E-05
	T	3.87E-48	7.87E-06	6.86E-05	6.86E-05	4.45E-05	1.16E-04	1.05E-04	9.94E-06	1.12E-01	3.08E-07	2.19E-04
THYMUS	G	6.18E-06	7.41E-05	7.55E-05	7.55E-05	6.41E-05	5.76E-05	9.25E-05	5.09E-05	1.04E-06	4.99E-04	2.10E-04
	B	0.0	0.0	0.0	0.0	0.0	0.0	0.0	0.0	0.0	0.0	3.55E-05
	T	6.18E-06	7.41E-05	7.55E-05	7.55E-05	6.41E-05	5.76E-05	9.25E-05	5.09E-05	1.04E-06	4.99E-04	2.45E-04
THYROID	G	1.72E-06	2.03E-05	1.19E-04	1.19E-04	9.66E-05	8.25E-05	9.33E-05	1.58E-05	3.08E-07	5.48E-02	1.56E-04
	B	0.0	0.0	0.0	0.0	0.0	0.0	0.0	0.0	0.0	1.24E-01	3.55E-05
	T	1.72E-06	2.03E-05	1.19E-04	1.19E-04	9.66E-05	8.25E-05	9.33E-05	1.58E-05	3.08E-07	1.79E-01	1.92E-04
UTERUS	G	2.17E-03	7.29E-05	6.77E-05	6.77E-05	2.34E-04	7.54E-05	5.80E-05	5.09E-05	3.87E-48	1.62E-06	2.14E-04
	B	0.0	0.0	0.0	0.0	0.0	0.0	0.0	0.0	0.0	0.0	3.55E-05
	T	2.17E-03	7.29E-05	6.77E-05	6.77E-05	2.34E-04	7.54E-05	5.80E-05	5.09E-05	3.87E-48	1.62E-06	2.50E-04
T BODY	G	2.30E-04	2.25E-04	1.63E-04	1.63E-04	1.82E-04	1.45E-04	1.00E-04	1.93E-04	1.61E-04	1.48E-04	1.64E-04
	B	3.55E-05	3.55E-05	3.55E-05	3.55E-05	3.55E-05	3.55E-05	3.55E-05	3.55E-05	3.55E-05	3.55E-05	3.55E-05
	T	2.65E-04	2.60E-04	1.99E-04	1.99E-04	2.17E-04	1.80E-04	1.36E-04	2.29E-04	1.96E-04	1.83E-04	1.99E-04

*"MUSCLE" VALUES MAY BE USED FOR "SEPARABLE FAT" WITH ADJUSTMENT (SEE TEXT)
PRINCIPLE REFERENCE-DAVIS, P. W. ET AL., PHYS. REV. 135, B1310 (1964)
DATE DECAY DATA REVIEWED-APRIL 1974

S, AVERAGE DOSE EQUIVALENT PER UNIT ACCUMULATED ACTIVITY (REM/UCI-DAY), FOR 39-YTTRIUM-90 (TR=6.400E 01 HOURS)

DATE OF TABLE 11-27-74

TARGET ORGANS		SOURCE ORGANS										
		ADRENALS	BLAD CON	S CONT	SI+CONT	ULI CONT	LLI CONT	KIDNEYS	LIVER	LUNG	RESP LYM NODE	MUSCLE*
ADRENALS	B	3.40E 00	0.0	0.0	0.0	0.0	0.0	0.0	0.0	0.0	0.0	0.0
	T	3.40E 00	0.0	0.0	0.0	0.0	0.0	0.0	0.0	0.0	0.0	0.0
BLAD WALL	B	0.0	1.19E-01	0.0	0.0	0.0	0.0	0.0	0.0	0.0	0.0	0.0
	T	0.0	1.19E-01	0.0	0.0	0.0	0.0	0.0	0.0	0.0	0.0	0.0
GI TRACT S WALL	B	0.0	0.0	9.53E-02	0.0	0.0	0.0	0.0	0.0	0.0	0.0	0.0
	T	0.0	0.0	9.53E-02	0.0	0.0	0.0	0.0	0.0	0.0	0.0	0.0
SI+CONT	B	0.0	0.0	0.0	5.95E-02	0.0	0.0	0.0	0.0	0.0	0.0	0.0
	T	0.0	0.0	0.0	5.95E-02	0.0	0.0	0.0	0.0	0.0	0.0	0.0
ULI WALL	B	0.0	0.0	0.0	0.0	1.08E-01	0.0	0.0	0.0	0.0	0.0	0.0
	T	0.0	0.0	0.0	0.0	1.08E-01	0.0	0.0	0.0	0.0	0.0	0.0
LLI WALL	B	0.0	0.0	0.0	0.0	0.0	1.76E-01	0.0	0.0	0.0	0.0	0.0
	T	0.0	0.0	0.0	0.0	0.0	1.76E-01	0.0	0.0	0.0	0.0	0.0
KIDNEYS	B	0.0	0.0	0.0	0.0	0.0	0.0	1.54E-01	0.0	0.0	0.0	0.0
	T	0.0	0.0	0.0	0.0	0.0	0.0	1.54E-01	0.0	0.0	0.0	0.0
LIVER	B	0.0	0.0	0.0	0.0	0.0	0.0	0.0	2.65E-02	0.0	0.0	0.0
	T	0.0	0.0	0.0	0.0	0.0	0.0	0.0	2.65E-02	0.0	0.0	0.0
LUNGS	B	0.0	0.0	0.0	0.0	0.0	0.0	0.0	0.0	4.76E-02	4.76E-02	0.0
	T	0.0	0.0	0.0	0.0	0.0	0.0	0.0	0.0	4.76E-02	4.76E-02	0.0
RESP LYM NODE	B	0.0	0.0	0.0	0.0	0.0	0.0	0.0	0.0	4.76E-02	3.18E 00	0.0
	T	0.0	0.0	0.0	0.0	0.0	0.0	0.0	0.0	4.76E-02	3.18E 00	0.0
MUSCLE*	B	0.0	0.0	0.0	0.0	0.0	0.0	0.0	0.0	0.0	0.0	1.70E-03
	T	0.0	0.0	0.0	0.0	0.0	0.0	0.0	0.0	0.0	0.0	1.70E-03
OVARIES	B	0.0	0.0	0.0	0.0	0.0	0.0	0.0	0.0	0.0	0.0	0.0
	T	0.0	0.0	0.0	0.0	0.0	0.0	0.0	0.0	0.0	0.0	0.0

39-YTTRIUM-90 CONTINUED

S O U R C E O R G A N S

TARGET ORGANS		ADRENALS	BLAD CON	S CONT	SI+CONT	ULI CONT	LLI CONT	KIDNEYS	LIVER	LUNG	RESP LYM NODE	MUSCLE*
PANCREAS	B	0.0	0.0	0.0	0.0	0.0	0.0	0.0	0.0	0.0	0.0	0.0
	T	0.0	0.0	0.0	0.0	0.0	0.0	0.0	0.0	0.0	0.0	0.0
SKELETON BONE	B	0.0	0.0	0.0	0.0	0.0	0.0	0.0	0.0	0.0	0.0	0.0
	T	0.0	0.0	0.0	0.0	0.0	0.0	0.0	0.0	0.0	0.0	0.0
R MARROW	B	0.0	0.0	0.0	0.0	0.0	0.0	0.0	0.0	0.0	0.0	0.0
	T	0.0	0.0	0.0	0.0	0.0	0.0	0.0	0.0	0.0	0.0	0.0
Y MARROW	B	0.0	0.0	0.0	0.0	0.0	0.0	0.0	0.0	0.0	0.0	0.0
	T	0.0	0.0	0.0	0.0	0.0	0.0	0.0	0.0	0.0	0.0	0.0
T E CL	B	0.0	0.0	0.0	0.0	0.0	0.0	0.0	0.0	0.0	0.0	0.0
	T	0.0	0.0	0.0	0.0	0.0	0.0	0.0	0.0	0.0	0.0	0.0
SKIN	B	0.0	0.0	0.0	0.0	0.0	0.0	0.0	0.0	0.0	0.0	0.0
	T	0.0	0.0	0.0	0.0	0.0	0.0	0.0	0.0	0.0	0.0	0.0
SPLEEN	B	0.0	0.0	0.0	0.0	0.0	0.0	0.0	0.0	0.0	0.0	0.0
	T	0.0	0.0	0.0	0.0	0.0	0.0	0.0	0.0	0.0	0.0	0.0
TESTES	B	0.0	0.0	0.0	0.0	0.0	0.0	0.0	0.0	0.0	0.0	0.0
	T	0.0	0.0	0.0	0.0	0.0	0.0	0.0	0.0	0.0	0.0	0.0
THYMUS	B	0.0	0.0	0.0	0.0	0.0	0.0	0.0	0.0	0.0	0.0	0.0
	T	0.0	0.0	0.0	0.0	0.0	0.0	0.0	0.0	0.0	0.0	0.0
THYROID	B	0.0	0.0	0.0	0.0	0.0	0.0	0.0	0.0	0.0	0.0	0.0
	T	0.0	0.0	0.0	0.0	0.0	0.0	0.0	0.0	0.0	0.0	0.0
UTERUS	B	0.0	0.0	0.0	0.0	0.0	0.0	0.0	0.0	0.0	0.0	0.0
	T	0.0	0.0	0.0	0.0	0.0	0.0	0.0	0.0	0.0	0.0	0.0
T BODY	B	6.81E-04	7.66E-05	2.04E-04	5.44E-04	3.25E-04	4.03E-04	6.81E-04	6.81E-04	6.81E-04	6.81E-04	6.81E-04
	T	6.81E-04	7.66E-05	2.04E-04	5.44E-04	3.25E-04	4.03E-04	6.81E-04	6.81E-04	6.81E-04	6.81E-04	6.81E-04

CONTINUED NEXT PAGE

39-YTTRIUM-90 CONTINUED

TARGET ORGANS		SOURCE ORGANS										
		OVARIES	PANCREAS	COR BONE	CAN BONE	R MARROW	Y MARROW	SKIN	SPLEEN	TESTES	THYROID	T BODY
ADRENALS	B	0.0	0.0	0.0	0.0	0.0	0.0	0.0	0.0	0.0	0.0	6.81E-04
	T	0.0	0.0	0.0	0.0	0.0	0.0	0.0	0.0	0.0	0.0	6.81E-04
BLAD WALL	B	0.0	0.0	0.0	0.0	0.0	0.0	0.0	0.0	0.0	0.0	6.81E-04
	T	0.0	0.0	0.0	0.0	0.0	0.0	0.0	0.0	0.0	0.0	6.81E-04
GI TRACT												
S WALL	B	0.0	0.0	0.0	0.0	0.0	0.0	0.0	0.0	0.0	0.0	6.81E-04
	T	0.0	0.0	0.0	0.0	0.0	0.0	0.0	0.0	0.0	0.0	6.81E-04
SI+CONT	B	0.0	0.0	0.0	0.0	0.0	0.0	0.0	0.0	0.0	0.0	6.81E-04
	T	0.0	0.0	0.0	0.0	0.0	0.0	0.0	0.0	0.0	0.0	6.81E-04
ULI WALL	B	0.0	0.0	0.0	0.0	0.0	0.0	0.0	0.0	0.0	0.0	6.81E-04
	T	0.0	0.0	0.0	0.0	0.0	0.0	0.0	0.0	0.0	0.0	6.81E-04
LLI WALL	B	0.0	0.0	0.0	0.0	0.0	0.0	0.0	0.0	0.0	0.0	6.81E-04
	T	0.0	0.0	0.0	0.0	0.0	0.0	0.0	0.0	0.0	0.0	6.81E-04
KIDNEYS	B	0.0	0.0	0.0	0.0	0.0	0.0	0.0	0.0	0.0	0.0	6.81E-04
	T	0.0	0.0	0.0	0.0	0.0	0.0	0.0	0.0	0.0	0.0	6.81E-04
LIVER	B	0.0	0.0	0.0	0.0	0.0	0.0	0.0	0.0	0.0	0.0	6.81E-04
	T	0.0	0.0	0.0	0.0	0.0	0.0	0.0	0.0	0.0	0.0	6.81E-04
LUNGS	B	0.0	0.0	0.0	0.0	0.0	0.0	0.0	0.0	0.0	0.0	6.81E-04
	T	0.0	0.0	0.0	0.0	0.0	0.0	0.0	0.0	0.0	0.0	6.81E-04
RESP LYM NODE	B	0.0	0.0	0.0	0.0	0.0	0.0	0.0	0.0	0.0	0.0	6.81E-04
	T	0.0	0.0	0.0	0.0	0.0	0.0	0.0	0.0	0.0	0.0	6.81E-04
MUSCLE*	B	0.0	0.0	0.0	0.0	0.0	0.0	0.0	0.0	0.0	0.0	6.81E-04
	T	0.0	0.0	0.0	0.0	0.0	0.0	0.0	0.0	0.0	0.0	6.81E-04
OVARIES	B	4.33E 00	0.0	0.0	0.0	0.0	0.0	0.0	0.0	0.0	0.0	6.81E-04
	T	4.33E 00	0.0	0.0	0.0	0.0	0.0	0.0	0.0	0.0	0.0	6.81E-04

39-YTTRIUM-90 CONTINUED

TARGET ORGANS		SOURCE ORGANS										
		OVARIES	PANCREAS	COR BONE	CAN BONE	R MARROW	Y MARROW	SKIN	SPLEEN	TESTES	THYROID	T BODY
PANCREAS	B	0.0	4.76E-01	0.0	0.0	0.0	0.0	0.0	0.0	0.0	0.0	6.81E-04
	T	0.0	4.76E-01	0.0	0.0	0.0	0.0	0.0	0.0	0.0	0.0	6.81E-04
SKELETON BONE	B	0.0	0.0	9.53E-03	5.44E-03	2.73E-03	0.0	0.0	0.0	0.0	0.0	6.81E-04
	T	0.0	0.0	9.53E-03	5.44E-03	2.73E-03	0.0	0.0	0.0	0.0	0.0	6.81E-04
R MARROW	B	0.0	0.0	7.87E-04	1.36E-02	2.27E-02	0.0	0.0	0.0	0.0	0.0	6.81E-04
	T	0.0	0.0	7.87E-04	1.36E-02	2.27E-02	0.0	0.0	0.0	0.0	0.0	6.81E-04
Y MARROW	B	0.0	0.0	0.0	0.0	0.0	3.18E-02	0.0	0.0	0.0	0.0	6.81E-04
	T	0.0	0.0	0.0	0.0	0.0	3.18E-02	0.0	0.0	0.0	0.0	6.81E-04
T E CL	B	0.0	0.0	5.81E-03	8.08E-03	1.05E-02	7.94E-03	0.0	0.0	0.0	0.0	6.81E-04
	T	0.0	0.0	5.81E-03	8.08E-03	1.05E-02	7.94E-03	0.0	0.0	0.0	0.0	6.81E-04
SKIN	B	0.0	0.0	0.0	0.0	0.0	0.0	1.83E-02	0.0	0.0	0.0	6.81E-04
	T	0.0	0.0	0.0	0.0	0.0	0.0	1.83E-02	0.0	0.0	0.0	6.81E-04
SPLEEN	B	0.0	0.0	0.0	0.0	0.0	0.0	0.0	2.65E-01	0.0	0.0	6.81E-04
	T	0.0	0.0	0.0	0.0	0.0	0.0	0.0	2.65E-01	0.0	0.0	6.81E-04
TESTES	B	0.0	0.0	0.0	0.0	0.0	0.0	0.0	0.0	1.36E 00	0.0	6.81E-04
	T	0.0	0.0	0.0	0.0	0.0	0.0	0.0	0.0	1.36E 00	0.0	6.81E-04
THYMUS	B	0.0	0.0	0.0	0.0	0.0	0.0	0.0	0.0	0.0	0.0	6.81E-04
	T	0.0	0.0	0.0	0.0	0.0	0.0	0.0	0.0	0.0	0.0	6.81E-04
THYROID	B	0.0	0.0	0.0	0.0	0.0	0.0	0.0	0.0	0.0	2.38E 00	6.81E-04
	T	0.0	0.0	0.0	0.0	0.0	0.0	0.0	0.0	0.0	2.38E 00	6.81E-04
UTERUS	B	0.0	0.0	0.0	0.0	0.0	0.0	0.0	0.0	0.0	0.0	6.81E-04
	T	0.0	0.0	0.0	0.0	0.0	0.0	0.0	0.0	0.0	0.0	6.81E-04
T BODY	B	6.81E-04	6.81E-04	6.81E-04	6.81E-04	6.81E-04	6.81E-04	6.81E-04	6.81E-04	6.81E-04	6.81E-04	6.81E-04
	T	6.81E-04	6.81E-04	6.81E-04	6.81E-04	6.81E-04	6.81E-04	6.81E-04	6.81E-04	6.81E-04	6.81E-04	6.81E-04

*"MUSCLE" VALUES MAY BE USED FOR "SEPARABLE FAT" WITH ADJUSTMENT (SEE TEXT)
PRINCIPLE REFERENCE-LEDERER, C. M., ET AL., TABLE OF ISOTOPES, 6TH ED.
DATE DECAY DATA REVIEWED-AUGUST 1973

S, AVERAGE DOSE EQUIVALENT PER UNIT ACCUMULATED ACTIVITY (REM/UCI-DAY), FOR 39-YTTRIUM-91M (TB=5.000E 01 MIN)

DATE OF TABLE 11-27-74

TARGET ORGANS		SOURCE ORGANS										
		ADRENALS	BLAD CON	S CONT	SI+CONT	ULI CONT	LLI CONT	KIDNEYS	LIVER	LUNG	RESP LYM NODE	MUSCLE*
ADRENALS	G	4.27E-02	2.14E-05	1.94E-04	1.13E-04	9.43E-05	4.54E-05	1.14E-03	4.46E-04	2.23E-04	2.23E-04	1.40E-04
	B	1.01E-01	0.0	0.0	0.0	0.0	0.0	0.0	0.0	0.0	0.0	0.0
	T	1.44E-01	2.14E-05	1.94E-04	1.13E-04	9.43E-05	4.54E-05	1.14E-03	4.46E-04	2.23E-04	2.23E-04	1.40E-04
BLAD WALL	G	1.12E-05	6.79E-03	4.24E-05	3.01E-04	1.76E-04	5.09E-04	3.59E-05	3.06E-05	6.96E-06	6.96E-06	1.63E-04
	B	0.0	3.53E-03	0.0	0.0	0.0	0.0	0.0	0.0	0.0	0.0	0.0
	T	1.12E-05	1.03E-02	4.24E-05	3.01E-04	1.76E-04	5.09E-04	3.59E-05	3.06E-05	6.96E-06	6.96E-06	1.63E-04
GI TRACT S WALL	G	2.70E-04	3.15E-05	4.77E-03	3.11E-04	3.30E-04	1.63E-04	3.07E-04	1.74E-04	1.69E-04	1.69E-04	1.29E-04
	B	0.0	0.0	2.82E-03	0.0	0.0	0.0	0.0	0.0	0.0	0.0	0.0
	T	2.70E-04	3.15E-05	7.59E-03	3.11E-04	3.30E-04	1.63E-04	3.07E-04	1.74E-04	1.69E-04	1.69E-04	1.29E-04
SI+CONT	G	8.80E-05	2.40E-04	2.40E-04	2.84E-03	1.49E-03	8.15E-04	2.51E-04	1.45E-04	2.59E-05	2.59E-05	1.42E-04
	B	0.0	0.0	0.0	1.76E-03	0.0	0.0	0.0	0.0	0.0	0.0	0.0
	T	8.80E-05	2.40E-04	2.40E-04	4.61E-03	1.49E-03	8.15E-04	2.51E-04	1.45E-04	2.59E-05	2.59E-05	1.42E-04
ULI WALL	G	9.68E-05	2.13E-04	2.98E-04	2.09E-03	3.93E-03	3.84E-04	2.63E-04	2.33E-04	3.55E-05	3.55E-05	1.49E-04
	B	0.0	0.0	0.0	0.0	3.21E-03	0.0	0.0	0.0	0.0	0.0	0.0
	T	9.68E-05	2.13E-04	2.98E-04	2.09E-03	7.13E-03	3.84E-04	2.63E-04	2.33E-04	3.55E-05	3.55E-05	1.49E-04
LLI WALL	G	3.18E-05	6.43E-04	1.17E-04	6.18E-04	2.77E-04	4.73E-03	8.05E-05	2.94E-05	7.34E-06	7.34E-06	1.55E-04
	B	0.0	0.0	0.0	0.0	0.0	5.23E-03	0.0	0.0	0.0	0.0	0.0
	T	3.18E-05	6.43E-04	1.17E-04	6.18E-04	2.77E-04	9.95E-03	8.05E-05	2.94E-05	7.34E-06	7.34E-06	1.55E-04
KIDNEYS	G	1.05E-03	3.52E-05	3.01E-04	2.90E-04	2.49E-04	7.66E-05	6.74E-03	3.43E-04	9.56E-05	9.56E-05	1.31E-04
	B	0.0	0.0	0.0	0.0	0.0	0.0	4.55E-03	0.0	0.0	0.0	0.0
	T	1.05E-03	3.52E-05	3.01E-04	2.90E-04	2.49E-04	7.66E-05	1.13E-02	3.43E-04	9.56E-05	9.56E-05	1.31E-04
LIVER	G	4.46E-04	2.62E-05	1.86E-04	1.66E-04	2.25E-04	3.22E-05	3.64E-04	2.36E-03	2.18E-04	2.18E-04	1.03E-04
	B	0.0	0.0	0.0	0.0	0.0	0.0	0.0	7.84E-04	0.0	0.0	0.0
	T	4.46E-04	2.62E-05	1.86E-04	1.66E-04	2.25E-04	3.22E-05	3.64E-04	3.14E-03	2.18E-04	2.18E-04	1.03E-04
LUNGS	G	2.13E-04	4.75E-06	1.69E-04	3.10E-05	3.19E-05	9.88E-06	8.77E-05	2.19E-04	1.34E-03	1.34E-03	1.23E-04
	B	0.0	0.0	0.0	0.0	0.0	0.0	0.0	0.0	1.41E-03	1.41E-03	0.0
	T	2.13E-04	4.75E-06	1.69E-04	3.10E-05	3.19E-05	9.88E-06	8.77E-05	2.19E-04	2.75E-03	2.75E-03	1.23E-04
RESP LYM NODE	G	2.13E-04	4.75E-06	1.69E-04	3.10E-05	3.19E-05	9.88E-06	8.77E-05	2.19E-04	1.34E-03	1.34E-03	1.23E-04
	B	0.0	0.0	0.0	0.0	0.0	0.0	0.0	0.0	1.40E-03	9.41E-02	0.0
	T	2.13E-04	4.75E-06	1.69E-04	3.10E-05	3.19E-05	9.88E-06	8.77E-05	2.19E-04	2.74E-03	9.54E-02	1.23E-04
MUSCLE*	G	1.40E-04	1.63E-04	1.29E-04	1.42E-04	1.36E-04	1.55E-04	1.31E-04	1.03E-04	1.23E-04	1.23E-04	1.39E-04
	B	0.0	0.0	0.0	0.0	0.0	0.0	0.0	0.0	0.0	0.0	5.04E-05
	T	1.40E-04	1.63E-04	1.29E-04	1.42E-04	1.36E-04	1.55E-04	1.31E-04	1.03E-04	1.23E-04	1.23E-04	1.90E-04
OVARIES	G	5.01E-05	5.58E-04	5.47E-05	8.13E-04	1.12E-03	1.45E-03	1.10E-04	2.25E-05	1.42E-05	1.42E-05	1.82E-04
	B	0.0	0.0	0.0	0.0	0.0	0.0	0.0	0.0	0.0	0.0	0.0
	T	5.01E-05	5.58E-04	5.47E-05	8.13E-04	1.12E-03	1.45E-03	1.10E-04	2.25E-05	1.42E-05	1.42E-05	1.82E-04

39-YTTRIUM-91M CONTINUED

SOURCE ORGANS

TARGET ORGANS		ADRENALS	BLAD CON	S CONT	SI+CONT	ULI CONT	LLI CONT	KIDNEYS	LIVER	LUNG	RESP LYM NODE	MUSCLE*
PANCREAS	G	7.70E-04	2.42E-05	1.59E-03	1.90E-04	1.65E-04	6.85E-05	6.02E-04	4.35E-04	2.51E-04	2.51E-04	1.65E-04
	B	0.0	0.0	0.0	0.0	0.0	0.0	0.0	0.0	0.0	0.0	0.0
	T	7.70E-04	2.42E-05	1.59E-03	1.90E-04	1.65E-04	6.85E-05	6.02E-04	4.35E-04	2.51E-04	2.51E-04	1.65E-04
SKELETON BONE	G	1.25E-04	5.36E-05	5.52E-05	7.17E-05	6.59E-05	9.52E-05	9.00E-05	6.71E-05	9.16E-05	9.16E-05	1.02E-04
	B	0.0	0.0	0.0	0.0	0.0	0.0	0.0	0.0	0.0	0.0	0.0
	T	1.25E-04	5.36E-05	5.52E-05	7.17E-05	6.59E-05	9.52E-05	9.00E-05	6.71E-05	9.16E-05	9.16E-05	1.02E-04
R MARROW	G	2.23E-04	1.14E-04	9.54E-05	2.27E-04	1.96E-04	2.85E-04	2.27E-04	9.82E-05	1.15E-04	1.15E-04	1.26E-04
	B	0.0	0.0	0.0	0.0	0.0	0.0	0.0	0.0	0.0	0.0	0.0
	T	2.23E-04	1.14E-04	9.54E-05	2.27E-04	1.96E-04	2.85E-04	2.27E-04	9.82E-05	1.15E-04	1.15E-04	1.26E-04
Y MARROW	G	1.21E-04	4.91E-05	7.67E-05	9.93E-05	9.35E-05	1.18E-04	1.12E-04	9.83E-05	9.66E-05	9.66E-05	1.03E-04
	B	0.0	0.0	0.0	0.0	0.0	0.0	0.0	0.0	0.0	0.0	0.0
	T	1.21E-04	4.91E-05	7.67E-05	9.93E-05	9.35E-05	1.18E-04	1.12E-04	9.83E-05	9.66E-05	9.66E-05	1.03E-04
T E CL	G	1.25E-04	5.36E-05	5.52E-05	7.17E-05	6.59E-05	9.52E-05	9.00E-05	6.71E-05	9.16E-05	9.16E-05	1.02E-04
	B	0.0	0.0	0.0	0.0	0.0	0.0	0.0	0.0	0.0	0.0	0.0
	T	1.25E-04	5.36E-05	5.52E-05	7.17E-05	6.59E-05	9.52E-05	9.00E-05	6.71E-05	9.16E-05	9.16E-05	1.02E-04
SKIN	G	6.30E-05	6.02E-05	5.47E-05	4.92E-05	5.11E-05	5.43E-05	6.11E-05	5.56E-05	6.26E-05	6.26E-05	8.42E-05
	B	0.0	0.0	0.0	0.0	0.0	0.0	0.0	0.0	0.0	0.0	0.0
	T	6.30E-05	6.02E-05	5.47E-05	4.92E-05	5.11E-05	5.43E-05	6.11E-05	5.56E-05	6.26E-05	6.26E-05	8.42E-05
SPLEEN	G	5.86E-04	2.11E-05	8.67E-04	1.44E-04	1.14E-04	8.75E-05	7.58E-04	9.30E-05	1.95E-04	1.95E-04	1.35E-04
	B	0.0	0.0	0.0	0.0	0.0	0.0	0.0	0.0	0.0	0.0	0.0
	T	5.86E-04	2.11E-05	8.67E-04	1.44E-04	1.14E-04	8.75E-05	7.58E-04	9.30E-05	1.95E-04	1.95E-04	1.35E-04
TESTES	G	6.69E-06	4.64E-04	3.50E-06	3.47E-05	4.79E-05	1.85E-04	1.40E-05	1.18E-05	2.36E-06	2.36E-06	1.14E-04
	B	0.0	0.0	0.0	0.0	0.0	0.0	0.0	0.0	0.0	0.0	0.0
	T	6.69E-06	4.64E-04	3.50E-06	3.47E-05	4.79E-05	1.85E-04	1.40E-05	1.18E-05	2.36E-06	2.36E-06	1.14E-04
THYMUS	G	8.45E-05	3.06E-06	2.66E-05	1.30E-05	1.42E-05	5.51E-06	3.47E-05	1.18E-04	3.39E-04	3.39E-04	1.51E-04
	B	0.0	0.0	0.0	0.0	0.0	0.0	0.0	0.0	0.0	0.0	0.0
	T	8.45E-05	3.06E-06	2.66E-05	1.30E-05	1.42E-05	5.51E-06	3.47E-05	1.18E-04	3.39E-04	3.39E-04	1.51E-04
THYROID	G	1.84E-05	9.40E-07	1.42E-05	3.81E-06	4.08E-06	1.76E-06	8.92E-06	1.70E-05	1.13E-04	1.13E-04	1.27E-04
	B	0.0	0.0	0.0	0.0	0.0	0.0	0.0	0.0	0.0	0.0	0.0
	T	1.84E-05	9.40E-07	1.42E-05	3.81E-06	4.08E-06	1.76E-06	8.92E-06	1.70E-05	1.13E-04	1.13E-04	1.27E-04
UTERUS	G	3.55E-05	1.36E-03	8.28E-05	7.92E-04	4.10E-04	5.08E-04	7.65E-05	3.99E-05	9.00E-06	9.00E-06	1.80E-04
	B	0.0	0.0	0.0	0.0	0.0	0.0	0.0	0.0	0.0	0.0	0.0
	T	3.55E-05	1.36E-03	8.28E-05	7.92E-04	4.10E-04	5.08E-04	7.65E-05	3.99E-05	9.00E-06	9.00E-06	1.80E-04
T BODY	G	1.54E-04	1.71E-04	1.63E-04	1.79E-04	1.75E-04	1.74E-04	1.56E-04	1.56E-04	1.33E-04	1.33E-04	1.33E-04
	B	2.02E-05	2.27E-06	6.05E-06	1.61E-05	9.62E-06	1.19E-05	2.02E-05	2.02E-05	2.02E-05	2.02E-05	2.02E-05
	T	1.74E-04	1.74E-04	1.69E-04	1.95E-04	1.85E-04	1.86E-04	1.76E-04	1.76E-04	1.53E-04	1.53E-04	1.53E-04

CONTINUED NEXT PAGE

39-YTTRIUM-91M CONTINUED

TARGET ORGANS		SOURCE ORGANS										
		OVARIES	PANCREAS	COR BONE	CAN BONE	R MARROW	Y MARROW	SKIN	SPLEEN	TESTES	THYROID	T BODY
ADRENALS	G	5.56E-05	7.61E-04	1.57E-04	1.57E-04	1.68E-04	9.37E-05	6.19E-05	5.61E-04	6.69E-06	1.84E-05	2.07E-04
	B	0.0	0.0	0.0	0.0	0.0	0.0	0.0	0.0	0.0	0.0	2.02E-05
	T	5.56E-05	7.61E-04	1.57E-04	1.57E-04	1.68E-04	9.37E-05	6.19E-05	5.61E-04	6.69E-06	1.84E-05	2.27E-04
BLAD WALL	G	6.12E-04	1.75E-05	5.86E-05	5.86E-05	6.59E-05	2.41E-05	5.91E-05	1.43E-05	4.68E-04	9.48E-07	1.69E-04
	B	0.0	0.0	0.0	0.0	0.0	0.0	0.0	0.0	0.0	0.0	2.02E-05
	T	6.12E-04	1.75E-05	5.86E-05	5.86E-05	6.59E-05	2.41E-05	5.91E-05	1.43E-05	4.68E-04	9.48E-07	1.89E-04
GI TRACT S WALL	G	7.64E-05	1.55E-03	5.34E-05	5.34E-05	9.27E-05	6.84E-05	5.98E-05	8.93E-04	1.05E-05	1.19E-05	1.63E-04
	B	0.0	0.0	0.0	0.0	0.0	0.0	0.0	0.0	0.0	0.0	2.02E-05
	T	7.64E-05	1.55E-03	5.34E-05	5.34E-05	9.27E-05	6.84E-05	5.98E-05	8.93E-04	1.05E-05	1.19E-05	1.83E-04
SI+CONT	G	1.08E-03	1.62E-04	7.42E-05	7.42E-05	2.46E-04	9.64E-05	5.12E-05	1.27E-04	4.93E-05	9.70E-07	1.81E-04
	B	0.0	0.0	0.0	0.0	0.0	0.0	0.0	0.0	0.0	0.0	2.02E-05
	T	1.08E-03	1.62E-04	7.42E-05	7.42E-05	2.46E-04	9.64E-05	5.12E-05	1.27E-04	4.93E-05	9.70E-07	2.01E-04
ULI WALL	G	1.01E-03	1.98E-04	6.49E-05	6.49E-05	1.88E-04	7.85E-05	5.42E-05	1.28E-04	3.03E-05	1.28E-06	1.79E-04
	B	0.0	0.0	0.0	0.0	0.0	0.0	0.0	0.0	0.0	0.0	2.02E-05
	T	1.01E-03	1.98E-04	6.49E-05	6.49E-05	1.88E-04	7.85E-05	5.42E-05	1.28E-04	3.03E-05	1.28E-06	1.99E-04
LLI WALL	G	1.29E-03	4.92E-05	8.77E-05	8.77E-05	2.81E-04	7.55E-05	5.61E-05	6.36E-05	2.56E-04	1.47E-06	1.82E-04
	B	0.0	0.0	0.0	0.0	0.0	0.0	0.0	0.0	0.0	0.0	2.02E-05
	T	1.29E-03	4.92E-05	8.77E-05	8.77E-05	2.81E-04	7.55E-05	5.61E-05	6.36E-05	2.56E-04	1.47E-06	2.02E-04
KIDNEYS	G	1.04E-04	5.66E-04	8.60E-05	8.60E-05	2.18E-04	1.12E-04	6.94E-05	7.74E-04	9.82E-06	5.19E-06	1.62E-04
	B	0.0	0.0	0.0	0.0	0.0	0.0	0.0	0.0	0.0	0.0	2.02E-05
	T	1.04E-04	5.66E-04	8.60E-05	8.60E-05	2.18E-04	1.12E-04	6.94E-05	7.74E-04	9.82E-06	5.19E-06	1.82E-04
LIVER	G	5.66E-05	3.75E-04	6.51E-05	6.51E-05	9.35E-05	1.01E-04	6.24E-05	9.84E-05	5.24E-06	1.50E-05	1.60E-04
	B	0.0	0.0	0.0	0.0	0.0	0.0	0.0	0.0	0.0	0.0	2.02E-05
	T	5.66E-05	3.75E-04	6.51E-05	6.51E-05	9.35E-05	1.01E-04	6.24E-05	9.84E-05	5.24E-06	1.50E-05	1.81E-04
LUNGS	G	1.08E-05	2.18E-04	9.02E-05	9.02E-05	1.10E-04	9.20E-05	6.28E-05	2.00E-04	1.46E-06	9.85E-05	1.42E-04
	B	0.0	0.0	0.0	0.0	0.0	0.0	0.0	0.0	0.0	0.0	2.02E-05
	T	1.08E-05	2.18E-04	9.02E-05	9.02E-05	1.10E-04	9.20E-05	6.28E-05	2.00E-04	1.46E-06	9.85E-05	1.62E-04
RESP LYM NODE	G	1.08E-05	2.18E-04	9.02E-05	9.02E-05	1.10E-04	9.20E-05	6.28E-05	2.00E-04	1.46E-06	9.85E-05	1.42E-04
	B	0.0	0.0	0.0	0.0	0.0	0.0	0.0	0.0	0.0	0.0	2.02E-05
	T	1.08E-05	2.18E-04	9.02E-05	9.02E-05	1.10E-04	9.20E-05	6.28E-05	2.00E-04	1.46E-06	9.85E-05	1.62E-04
MUSCLE*	G	1.82E-04	1.65E-04	1.02E-04	1.02E-04	1.20E-04	9.49E-05	8.42E-05	1.35E-04	1.14E-04	1.27E-04	1.33E-04
	B	0.0	0.0	0.0	0.0	0.0	0.0	0.0	0.0	0.0	0.0	2.02E-05
	T	1.82E-04	1.65E-04	1.02E-04	1.02E-04	1.20E-04	9.49E-05	8.42E-05	1.35E-04	1.14E-04	1.27E-04	1.53E-04
OVARIES	G	7.09E-02	4.04E-05	9.86E-05	9.86E-05	3.23E-04	7.82E-05	3.03E-05	9.35E-05	1.64E-48	1.75E-06	1.52E-04
	B	1.28E-01	0.0	0.0	0.0	0.0	0.0	0.0	0.0	0.0	0.0	2.02E-05
	T	1.99E-01	4.04E-05	9.86E-05	9.86E-05	3.23E-04	7.82E-05	3.03E-05	9.35E-05	1.64E-48	1.75E-06	1.72E-04

39-YTTRIUM-91M CONTINUED

SOURCE ORGANS

TARGET ORGANS		OVARIES	PANCREAS	COR BONE	CAN BONE	R MARROW	Y MARROW	SKIN	SPLEEN	TESTES	THYROID	T BODY
PANCREAS	G	5.43E-05	1.96E-02	8.38E-05	8.38E-05	1.53E-04	1.18E-04	5.31E-05	1.77E-03	4.06E-06	6.13E-06	1.58E-04
	B	0.0	1.41E-02	0.0	0.0	0.0	0.0	0.0	0.0	0.0	0.0	2.02E-05
	T	5.43E-05	3.37E-02	8.38E-05	8.38E-05	1.53E-04	1.18E-04	5.31E-05	1.77E-03	4.06E-06	6.13E-06	1.78E-04
SKELETON BONE	G	8.42E-05	8.39E-05	3.19E-04	3.19E-04	2.14E-04	2.37E-04	7.82E-05	7.03E-05	6.07E-05	6.92E-05	1.37E-04
	B	0.0	0.0	2.82E-04	1.67E-04	7.67E-05	0.0	0.0	0.0	0.0	0.0	2.02E-05
	T	8.42E-05	8.39E-05	6.01E-04	4.86E-04	2.90E-04	2.37E-04	7.82E-05	7.03E-05	6.07E-05	6.92E-05	1.57E-04
R MARROW	G	2.80E-04	1.58E-04	2.85E-04	2.85E-04	6.85E-04	2.46E-04	7.27E-05	1.04E-04	4.82E-05	7.64E-05	1.51E-04
	B	0.0	0.0	1.39E-05	3.84E-04	6.85E-04	0.0	0.0	0.0	0.0	0.0	2.02E-05
	T	2.80E-04	1.58E-04	2.99E-04	6.68E-04	1.37E-03	2.46E-04	7.27E-05	1.04E-04	4.82E-05	7.64E-05	1.71E-04
Y MARROW	G	1.13E-04	9.85E-05	2.76E-04	2.76E-04	2.63E-04	4.03E-04	8.28E-05	1.06E-04	2.61E-05	3.68E-05	1.28E-04
	B	0.0	0.0	0.0	0.0	0.0	9.41E-04	0.0	0.0	0.0	0.0	2.02E-05
	T	1.13E-04	9.85E-05	2.76E-04	2.76E-04	2.63E-04	1.34E-03	8.28E-05	1.06E-04	2.61E-05	3.68E-05	1.48E-04
T E CL	G	8.42E-05	8.39E-05	3.19E-04	3.19E-04	2.88E-04	2.62E-04	7.82E-05	7.03E-05	6.07E-05	6.92E-05	1.37E-04
	B	0.0	0.0	1.80E-04	2.89E-04	2.78E-04	2.35E-04	0.0	0.0	0.0	0.0	2.02E-05
	T	8.42E-05	8.39E-05	4.99E-04	6.08E-04	5.66E-04	4.97E-04	7.82E-05	7.03E-05	6.07E-05	6.92E-05	1.57E-04
SKIN	G	4.87E-05	4.71E-05	8.00E-05	8.00E-05	6.90E-05	8.94E-05	1.88E-04	5.84E-05	1.46E-04	7.97E-05	8.31E-05
	B	0.0	0.0	0.0	0.0	0.0	0.0	5.43E-04	0.0	0.0	0.0	2.02E-05
	T	4.87E-05	4.71E-05	8.00E-05	8.00E-05	6.90E-05	8.94E-05	7.31E-04	5.84E-05	1.46E-04	7.97E-05	1.03E-04
SPLEEN	G	6.33E-05	1.74E-03	7.78E-05	7.78E-05	7.60E-05	9.09E-05	6.19E-05	1.20E-02	1.15E-05	1.25E-05	1.64E-04
	B	0.0	0.0	0.0	0.0	0.0	0.0	0.0	7.84E-03	0.0	0.0	2.02E-05
	T	6.33E-05	1.74E-03	7.78E-05	7.78E-05	7.60E-05	9.09E-05	6.19E-05	1.99E-02	1.15E-05	1.25E-05	1.84E-04
TESTES	G	1.64E-48	6.34E-06	5.36E-05	5.36E-05	3.98E-05	8.87E-05	7.72E-05	8.98E-06	3.31E-02	3.47E-07	1.72E-04
	B	0.0	0.0	0.0	0.0	0.0	0.0	0.0	0.0	4.03E-02	0.0	2.02E-05
	T	1.64E-48	6.34E-06	5.36E-05	5.36E-05	3.98E-05	8.87E-05	7.72E-05	8.98E-06	7.34E-02	3.47E-07	1.92E-04
THYMUS	G	5.79E-06	4.88E-05	7.11E-05	7.11E-05	4.29E-05	3.40E-05	7.84E-05	4.62E-05	1.09E-06	3.99E-04	1.37E-04
	B	0.0	0.0	0.0	0.0	0.0	0.0	0.0	0.0	0.0	0.0	2.02E-05
	T	5.79E-06	4.88E-05	7.11E-05	7.11E-05	4.29E-05	3.40E-05	7.84E-05	4.62E-05	1.09E-06	3.99E-04	1.57E-04
THYROID	G	1.76E-06	1.59E-05	9.71E-05	9.71E-05	8.37E-05	4.11E-05	7.60E-05	1.38E-05	3.47E-07	4.47E-02	1.33E-04
	B	0.0	0.0	0.0	0.0	0.0	0.0	0.0	0.0	0.0	7.05E-02	2.02E-05
	T	1.76E-06	1.59E-05	9.71E-05	9.71E-05	8.37E-05	4.11E-05	7.60E-05	1.38E-05	3.47E-07	1.15E-01	1.53E-04
UTERUS	G	1.63E-03	5.76E-05	5.60E-05	5.60E-05	1.72E-04	6.14E-05	5.41E-05	4.44E-05	1.64E-48	1.67E-06	1.66E-04
	B	0.0	0.0	0.0	0.0	0.0	0.0	0.0	0.0	0.0	0.0	2.02E-05
	T	1.63E-03	5.76E-05	5.60E-05	5.60E-05	1.72E-04	6.14E-05	5.41E-05	4.44E-05	1.64E-48	1.67E-06	1.86E-04
T BODY	G	1.83E-04	1.79E-04	1.32E-04	1.32E-04	1.46E-04	1.18E-04	8.46E-05	1.55E-04	1.31E-04	1.20E-04	1.33E-04
	B	2.02E-05	2.02E-05	2.02E-05	2.02E-05	2.02E-05	2.02E-05	2.02E-05	2.02E-05	2.02E-05	2.02E-05	2.02E-05
	T	2.03E-04	1.99E-04	1.52E-04	1.52E-04	1.66E-04	1.38E-04	1.05E-04	1.75E-04	1.51E-04	1.40E-04	1.53E-04

*"MUSCLE" VALUES MAY BE USED FOR "SEPARABLE FAT" WITH ADJUSTMENT (SEE TEXT)
PRINCIPLE REFERENCE-LEDERER, C. M. ET AL., TABLE OF ISOTOPES, 6TH ED.
DATE DECAY DATA REVIEWED-DECEMBER 1968

S, AVERAGE DOSE EQUIVALENT PER UNIT ACCUMULATED ACTIVITY (REM/UCI-DAY), FOR 39-YTTRIUM-91 (TR=5.880E 01 DAYS)

DATE OF TABLE 11-27-74

TARGET ORGANS		SOURCE ORGANS										
		ADRENALS	BLAD CON	S CONT	SI+CONT	ULI CONT	LLI CONT	KIDNEYS	LIVER	LUNG	RESP LYM NODE	MUSCLE*
ADRENALS	G	2.68E-04	1.56E-07	1.65E-06	7.04E-07	7.19E-07	2.98E-07	7.13E-06	2.74E-06	1.30E-06	1.30E-06	9.05E-07
	B	2.21E 00	0.0	0.0	0.0	0.0	0.0	0.0	0.0	0.0	0.0	0.0
	T	2.21E 00	1.56E-07	1.65E-06	7.04E-07	7.19E-07	2.98E-07	7.13E-06	2.74E-06	1.30E-06	1.30E-06	9.05E-07
BLAD WALL	G	1.59E-07	4.01E-05	2.93E-07	1.57E-06	1.14E-06	3.32E-06	2.85E-07	1.29E-07	5.91E-08	5.91E-08	1.04E-06
	B	0.0	7.73E-02	0.0	0.0	0.0	0.0	0.0	0.0	0.0	0.0	0.0
	T	1.59E-07	7.73E-02	2.93E-07	1.57E-06	1.14E-06	3.32E-06	2.85E-07	1.29E-07	5.91E-08	5.91E-08	1.04E-06
GI TRACT S WALL	G	1.68E-06	3.02E-07	2.93E-05	2.07E-06	1.99E-06	9.05E-07	1.81E-06	1.16E-06	1.16E-06	1.16E-06	8.37E-07
	B	0.0	0.0	6.18E-02	0.0	0.0	0.0	0.0	0.0	0.0	0.0	0.0
	T	1.68E-06	3.02E-07	6.19E-02	2.07E-06	1.99E-06	9.05E-07	1.81E-06	1.16E-06	1.16E-06	1.16E-06	8.37E-07
SI+CONT	G	6.04E-07	1.59E-06	1.45E-06	1.74E-05	8.98E-06	5.12E-06	1.67E-06	9.53E-07	1.98E-07	1.98E-07	9.08E-07
	B	0.0	0.0	0.0	3.87E-02	0.0	0.0	0.0	0.0	0.0	0.0	0.0
	T	6.04E-07	1.59E-06	1.45E-06	3.87E-02	8.98E-06	5.12E-06	1.67E-06	9.53E-07	1.98E-07	1.98E-07	9.08E-07
ULI WALL	G	6.31E-07	1.15E-06	1.95E-06	1.30E-05	2.47E-05	2.41E-06	1.71E-06	1.34E-06	2.62E-07	2.62E-07	9.62E-07
	B	0.0	0.0	0.0	0.0	7.03E-02	0.0	0.0	0.0	0.0	0.0	0.0
	T	6.31E-07	1.15E-06	1.95E-06	1.30E-05	7.03E-02	2.41E-06	1.71E-06	1.34E-06	2.62E-07	2.62E-07	9.62E-07
LLI WALL	G	1.88E-07	3.94E-06	8.40E-07	3.94E-06	1.84E-06	2.93E-05	5.70E-07	1.93E-07	5.12E-08	5.12E-08	9.94E-07
	B	0.0	0.0	0.0	0.0	0.0	1.15E-01	0.0	0.0	0.0	0.0	0.0
	T	1.88E-07	3.94E-06	8.40E-07	3.94E-06	1.84E-06	1.15E-01	5.70E-07	1.93E-07	5.12E-08	5.12E-08	9.94E-07
KIDNEYS	G	6.26E-06	2.58E-07	1.91E-06	1.79E-06	1.68E-06	5.64E-07	4.11E-05	2.16E-06	6.28E-07	6.28E-07	8.56E-07
	B	0.0	0.0	0.0	0.0	0.0	0.0	9.97E-02	0.0	0.0	0.0	0.0
	T	6.26E-06	2.58E-07	1.91E-06	1.79E-06	1.68E-06	5.64E-07	9.98E-02	2.16E-06	6.28E-07	6.28E-07	8.56E-07
LIVER	G	2.75E-06	1.85E-07	1.16E-06	1.10E-06	1.47E-06	2.56E-07	2.22E-06	1.45E-05	1.39E-06	1.39E-06	6.67E-07
	B	0.0	0.0	0.0	0.0	0.0	0.0	0.0	1.72E-02	0.0	0.0	0.0
	T	2.75E-06	1.85E-07	1.16E-06	1.10E-06	1.47E-06	2.56E-07	2.22E-06	1.72E-02	1.39E-06	1.39E-06	6.67E-07
LUNGS	G	1.41E-06	5.44E-08	1.05E-06	2.09E-07	2.61E-07	1.02E-07	5.87E-07	1.45E-06	8.27E-06	8.27E-06	7.80E-07
	B	0.0	0.0	0.0	0.0	0.0	0.0	0.0	0.0	3.09E-02	3.09E-02	0.0
	T	1.41E-06	5.44E-08	1.05E-06	2.09E-07	2.61E-07	1.02E-07	5.87E-07	1.45E-06	3.09E-02	3.09E-02	7.80E-07
RESP LYM NODE	G	1.41E-06	5.44E-08	1.05E-06	2.09E-07	2.61E-07	1.02E-07	5.87E-07	1.45E-06	8.27E-06	8.27E-06	7.80E-07
	B	0.0	0.0	0.0	0.0	0.0	0.0	0.0	0.0	3.09E-02	2.06E 00	0.0
	T	1.41E-06	5.44E-08	1.05E-06	2.09E-07	2.61E-07	1.02E-07	5.87E-07	1.45E-06	3.09E-02	2.06E 00	7.80E-07
MUSCLE*	G	9.05E-07	1.04E-06	8.37E-07	9.08E-07	8.72E-07	9.94E-07	8.56E-07	6.67E-07	7.80E-07	7.80E-07	9.01E-07
	B	0.0	0.0	0.0	0.0	0.0	0.0	0.0	0.0	0.0	0.0	1.10E-03
	T	9.05E-07	1.04E-06	8.37E-07	9.08E-07	8.72E-07	9.94E-07	8.56E-07	6.67E-07	7.80E-07	7.80E-07	1.11E-03
OVARIES	G	2.16E-07	3.26E-06	7.83E-07	5.45E-06	3.95E-06	9.84E-06	8.83E-07	5.36E-07	1.08E-07	1.08E-07	1.16E-06
	B	0.0	0.0	0.0	0.0	0.0	0.0	0.0	0.0	0.0	0.0	0.0
	T	2.16E-07	3.26E-06	7.83E-07	5.45E-06	3.95E-06	9.84E-06	8.83E-07	5.36E-07	1.08E-07	1.08E-07	1.16E-06

39-YTTRIUM-91 CONTINUED

TARGET ORGANS		SOURCE ORGANS										
		ADRENALS	BLAD CON	S CONT	SI+CONT	ULI CONT	LLI CONT	KIDNEYS	LIVER	LUNG	RESP LYM NODE	MUSCLE*
PANCREAS	G	5.07E-06	1.70E-07	9.59E-06	1.10E-06	1.23E-06	4.18E-07	3.94E-06	2.40E-06	1.35E-06	1.35E-06	1.04E-06
	B	0.0	0.0	0.0	0.0	0.0	0.0	0.0	0.0	0.0	0.0	0.0
	T	5.07E-06	1.70E-07	9.59E-06	1.10E-06	1.23E-06	4.18E-07	3.94E-06	2.40E-06	1.35E-06	1.35E-06	1.04E-06
SKELETON BONE	G	7.83E-07	3.25E-07	3.43E-07	4.55E-07	4.04E-07	5.85E-07	5.67E-07	4.23E-07	5.66E-07	5.66E-07	6.71E-07
	B	0.0	0.0	0.0	0.0	0.0	0.0	0.0	0.0	0.0	0.0	0.0
	T	7.83E-07	3.25E-07	3.43E-07	4.55E-07	4.04E-07	5.85E-07	5.67E-07	4.23E-07	5.66E-07	5.66E-07	6.71E-07
R MARROW	G	1.38E-06	6.72E-07	5.69E-07	1.39E-06	1.16E-06	1.72E-06	1.42E-06	6.00E-07	7.21E-07	7.21E-07	7.59E-07
	B	0.0	0.0	0.0	0.0	0.0	0.0	0.0	0.0	0.0	0.0	0.0
	T	1.38E-06	6.72E-07	5.69E-07	1.39E-06	1.16E-06	1.72E-06	1.42E-06	6.00E-07	7.21E-07	7.21E-07	7.59E-07
Y MARROW	G	7.63E-07	3.00E-07	4.80E-07	6.22E-07	5.72E-07	7.22E-07	6.99E-07	6.32E-07	5.88E-07	5.88E-07	6.23E-07
	B	0.0	0.0	0.0	0.0	0.0	0.0	0.0	0.0	0.0	0.0	0.0
	T	7.63E-07	3.00E-07	4.80E-07	6.22E-07	5.72E-07	7.22E-07	6.99E-07	6.32E-07	5.88E-07	5.88E-07	6.23E-07
T E CL	G	7.83E-07	3.25E-07	3.43E-07	4.55E-07	4.04E-07	5.85E-07	5.67E-07	4.23E-07	5.66E-07	5.66E-07	6.71E-07
	B	0.0	0.0	0.0	0.0	0.0	0.0	0.0	0.0	0.0	0.0	0.0
	T	7.83E-07	3.25E-07	3.43E-07	4.55E-07	4.04E-07	5.85E-07	5.67E-07	4.23E-07	5.66E-07	5.66E-07	6.71E-07
SKIN	G	4.53E-07	4.26E-07	3.76E-07	3.62E-07	3.46E-07	3.95E-07	4.07E-07	3.82E-07	4.23E-07	4.23E-07	5.71E-07
	B	0.0	0.0	0.0	0.0	0.0	0.0	0.0	0.0	0.0	0.0	0.0
	T	4.53E-07	4.26E-07	3.76E-07	3.62E-07	3.46E-07	3.95E-07	4.07E-07	3.82E-07	4.23E-07	4.23E-07	5.71E-07
SPLEEN	G	3.43E-06	1.42E-07	5.46E-06	9.56E-07	8.59E-07	6.21E-07	4.79E-06	6.41E-07	1.19E-06	1.19E-06	8.71E-07
	B	0.0	0.0	0.0	0.0	0.0	0.0	0.0	0.0	0.0	0.0	0.0
	T	3.43E-06	1.42E-07	5.46E-06	9.56E-07	8.59E-07	6.21E-07	4.79E-06	6.41E-07	1.19E-06	1.19E-06	8.71E-07
TESTES	G	5.81E-08	2.69E-06	1.08E-07	3.43E-07	3.08E-07	9.00E-07	1.08E-07	1.31E-07	2.43E-08	2.43E-08	7.49E-07
	B	0.0	0.0	0.0	0.0	0.0	0.0	0.0	0.0	0.0	0.0	0.0
	T	5.81E-08	2.69E-06	1.08E-07	3.43E-07	3.08E-07	9.00E-07	1.08E-07	1.31E-07	2.43E-08	2.43E-08	7.49E-07
THYMUS	G	3.75E-07	3.05E-08	4.85E-07	1.01E-07	1.09E-07	4.85E-08	1.17E-07	4.43E-07	2.53E-06	2.53E-06	1.03E-06
	B	0.0	0.0	0.0	0.0	0.0	0.0	0.0	0.0	0.0	0.0	0.0
	T	3.75E-07	3.05E-08	4.85E-07	1.01E-07	1.09E-07	4.85E-08	1.17E-07	4.43E-07	2.53E-06	2.53E-06	1.03E-06
THYROID	G	1.45E-07	1.18E-08	1.09E-07	3.63E-08	3.83E-08	1.89E-08	7.37E-08	1.27E-07	7.16E-07	7.16E-07	8.07E-07
	B	0.0	0.0	0.0	0.0	0.0	0.0	0.0	0.0	0.0	0.0	0.0
	T	1.45E-07	1.18E-08	1.09E-07	3.63E-08	3.83E-08	1.89E-08	7.37E-08	1.27E-07	7.16E-07	7.16E-07	8.07E-07
UTERUS	G	2.99E-07	8.14E-06	6.02E-07	4.81E-06	2.85E-06	3.32E-06	5.84E-07	2.99E-07	1.16E-07	1.16E-07	1.37E-06
	B	0.0	0.0	0.0	0.0	0.0	0.0	0.0	0.0	0.0	0.0	0.0
	T	2.99E-07	8.14E-06	6.02E-07	4.81E-06	2.85E-06	3.32E-06	5.84E-07	2.99E-07	1.16E-07	1.16E-07	1.37E-06
T BODY	G	9.88E-07	1.08E-06	1.04E-06	1.14E-06	1.11E-06	1.11E-06	9.97E-07	9.94E-07	8.42E-07	8.42E-07	8.59E-07
	B	4.42E-04	4.97E-05	1.33E-04	3.53E-04	2.11E-04	2.62E-04	4.42E-04	4.42E-04	4.42E-04	4.42E-04	4.42E-04
	T	4.43E-04	5.08E-05	1.34E-04	3.55E-04	2.12E-04	2.63E-04	4.43E-04	4.43E-04	4.43E-04	4.43E-04	4.43E-04

CONTINUED NEXT PAGE

39-YTTRIUM-91 CONTINUED

SOURCE ORGANS

TARGET ORGANS		OVARIES	PANCREAS	COR BONE	CAN BONE	R MARROW	Y MARROW	SKIN	SPLEEN	TESTES	THYROID	T BODY
ADRENALS	G	3.34E-07	4.18E-06	1.17E-06	1.17E-06	1.60E-06	5.06E-07	5.21E-07	4.06E-06	5.81E-08	1.37E-07	1.39E-06
	B	0.0	0.0	0.0	0.0	0.0	0.0	0.0	0.0	0.0	0.0	4.42E-04
	T	3.34E-07	4.18E-06	1.17E-06	1.17E-06	1.60E-06	5.06E-07	5.21E-07	4.06E-06	5.81E-08	1.37E-07	4.43E-04
BLAD WALL	G	4.05E-06	1.23E-07	3.47E-07	3.47E-07	7.01E-07	2.25E-07	4.95E-07	2.04E-07	2.95E-06	1.19E-08	1.17E-06
	B	0.0	0.0	0.0	0.0	0.0	0.0	0.0	0.0	0.0	0.0	4.42E-04
	T	4.05E-06	1.23E-07	3.47E-07	3.47E-07	7.01E-07	2.25E-07	4.95E-07	2.04E-07	2.95E-06	1.19E-08	4.43E-04
GI TRACT S WALL	G	5.20E-07	9.68E-06	3.38E-07	3.38E-07	7.03E-07	4.46E-07	4.00E-07	5.60E-06	6.09E-08	9.98E-08	9.10E-07
	B	0.0	0.0	0.0	0.0	0.0	0.0	0.0	0.0	0.0	0.0	4.42E-04
	T	5.20E-07	9.68E-06	3.38E-07	3.38E-07	7.03E-07	4.46E-07	4.00E-07	5.60E-06	6.09E-08	9.98E-08	4.43E-04
SI+CONT	G	6.44E-06	1.07E-06	4.85E-07	4.85E-07	1.48E-06	6.09E-07	3.67E-07	8.56E-07	3.31E-07	2.97E-08	1.14E-06
	B	0.0	0.0	0.0	0.0	0.0	0.0	0.0	0.0	0.0	0.0	4.42E-04
	T	6.44E-06	1.07E-06	4.85E-07	4.85E-07	1.48E-06	6.09E-07	3.67E-07	8.56E-07	3.31E-07	2.97E-08	4.43E-04
ULI WALL	G	6.11E-06	1.30E-06	4.63E-07	4.63E-07	1.10E-06	5.57E-07	3.81E-07	8.54E-07	2.41E-07	3.42E-08	1.07E-06
	B	0.0	0.0	0.0	0.0	0.0	0.0	0.0	0.0	0.0	0.0	4.42E-04
	T	6.11E-06	1.30E-06	4.63E-07	4.63E-07	1.10E-06	5.57E-07	3.81E-07	8.54E-07	2.41E-07	3.42E-08	4.43E-04
LLI WALL	G	7.72E-06	3.82E-07	6.22E-07	6.22E-07	1.70E-06	5.32E-07	3.91E-07	3.87E-07	1.40E-06	1.64E-08	1.15E-06
	B	0.0	0.0	0.0	0.0	0.0	0.0	0.0	0.0	0.0	0.0	4.42E-04
	T	7.72E-06	3.82E-07	6.22E-07	6.22E-07	1.70E-06	5.32E-07	3.91E-07	3.87E-07	1.40E-06	1.64E-08	4.43E-04
KIDNEYS	G	6.50E-07	3.51E-06	6.80E-07	6.80E-07	1.46E-06	6.95E-07	4.65E-07	4.78E-06	9.85E-08	9.08E-08	1.02E-06
	B	0.0	0.0	0.0	0.0	0.0	0.0	0.0	0.0	0.0	0.0	4.42E-04
	T	6.50E-07	3.51E-06	6.80E-07	6.80E-07	1.46E-06	6.95E-07	4.65E-07	4.78E-06	9.85E-08	9.08E-08	4.43E-04
LIVER	G	4.01E-07	2.34E-06	4.39E-07	4.39E-07	6.14E-07	6.67E-07	4.14E-07	6.50E-07	7.13E-08	1.27E-07	1.03E-06
	B	0.0	0.0	0.0	0.0	0.0	0.0	0.0	0.0	0.0	0.0	4.42E-04
	T	4.01E-07	2.34E-06	4.39E-07	4.39E-07	6.14E-07	6.67E-07	4.14E-07	6.50E-07	7.13E-08	1.27E-07	4.43E-04
LUNGS	G	1.02E-07	1.33E-06	5.90E-07	5.90E-07	7.43E-07	6.25E-07	4.37E-07	1.22E-06	2.33E-08	6.74E-07	8.09E-07
	B	0.0	0.0	0.0	0.0	0.0	0.0	0.0	0.0	0.0	0.0	4.42E-04
	T	1.02E-07	1.33E-06	5.90E-07	5.90E-07	7.43E-07	6.25E-07	4.37E-07	1.22E-06	2.33E-08	6.74E-07	4.43E-04
RESP LYM NODE	G	1.02E-07	1.33E-06	5.90E-07	5.90E-07	7.43E-07	6.25E-07	4.37E-07	1.22E-06	2.33E-08	6.74E-07	8.09E-07
	B	0.0	0.0	0.0	0.0	0.0	0.0	0.0	0.0	0.0	0.0	4.42E-04
	T	1.02E-07	1.33E-06	5.90E-07	5.90E-07	7.43E-07	6.25E-07	4.37E-07	1.22E-06	2.33E-08	6.74E-07	4.43E-04
MUSCLE*	G	1.16E-06	1.04E-06	6.71E-07	6.71E-07	7.81E-07	6.16E-07	5.71E-07	8.71E-07	7.49E-07	8.07E-07	8.59E-07
	B	0.0	0.0	0.0	0.0	0.0	0.0	0.0	0.0	0.0	0.0	4.42E-04
	T	1.16E-06	1.04E-06	6.71E-07	6.71E-07	7.81E-07	6.16E-07	5.71E-07	8.71E-07	7.49E-07	8.07E-07	4.43E-04
OVARIES	G	4.38E-04	5.62E-07	5.57E-07	5.57E-07	1.79E-06	5.65E-07	3.64E-07	3.53E-07	0.0	1.95E-08	9.64E-07
	B	2.81E 00	0.0	0.0	0.0	0.0	0.0	0.0	0.0	0.0	0.0	4.42E-04
	T	2.81E 00	5.62E-07	5.57E-07	5.57E-07	1.79E-06	5.65E-07	3.64E-07	3.53E-07	0.0	1.95E-08	4.43E-04

39-YTTRIUM-91 CONTINUED

SOURCE ORGANS

TARGET ORGANS		OVARIES	PANCREAS	COR BONE	CAN BONE	R MARROW	Y MARROW	SKIN	SPLEEN	TESTES	THYROID	T BODY
PANCREAS	G	4.80E-07	1.22E-04	6.43E-07	6.43E-07	7.02E-07	6.16E-07	3.14E-07	1.03E-05	7.39E-08	1.37E-07	9.53E-07
	B	0.0	3.09E-01	0.0	0.0	0.0	0.0	0.0	0.0	0.0	0.0	4.42E-04
	T	4.80E-07	3.09E-01	6.43E-07	6.43E-07	7.02E-07	6.16E-07	3.14E-07	1.03E-05	7.39E-08	1.37E-07	4.43E-04
SKELETON BONE	G	5.20E-07	5.25E-07	1.98E-06	1.98E-06	1.32E-06	1.48E-06	5.20E-07	4.52E-07	3.88E-07	4.40E-07	8.43E-07
	B	0.0	0.0	6.18E-03	3.56E-03	1.75E-03	0.0	0.0	0.0	0.0	0.0	4.42E-04
	T	5.20E-07	5.25E-07	6.19E-03	3.56E-03	1.75E-03	1.48E-06	5.20E-07	4.52E-07	3.88E-07	4.40E-07	4.43E-04
R MARROW	G	1.67E-06	9.76E-07	1.80E-06	1.80E-06	4.17E-06	1.52E-06	4.86E-07	6.53E-07	3.00E-07	4.76E-07	9.25E-07
	B	0.0	0.0	3.52E-04	8.75E-03	1.48E-02	0.0	0.0	0.0	0.0	0.0	4.42E-04
	T	1.67E-06	9.76E-07	3.53E-04	8.75E-03	1.48E-02	1.52E-06	4.86E-07	6.53E-07	3.00E-07	4.76E-07	4.43E-04
Y MARROW	G	6.83E-07	6.20E-07	1.71E-06	1.71E-06	1.63E-06	2.51E-06	5.52E-07	6.69E-07	1.73E-07	2.43E-07	7.85E-07
	B	0.0	0.0	0.0	0.0	0.0	2.06E-02	0.0	0.0	0.0	0.0	4.42E-04
	T	6.83E-07	6.20E-07	1.71E-06	1.71E-06	1.63E-06	2.06E-02	5.52E-07	6.69E-07	1.73E-07	2.43E-07	4.43E-04
T E CL	G	5.20E-07	5.25E-07	1.98E-06	1.98E-06	1.77E-06	1.64E-06	5.20E-07	4.52E-07	3.88E-07	4.40E-07	8.43E-07
	B	0.0	0.0	3.97E-03	6.21E-03	6.17E-03	5.15E-03	0.0	0.0	0.0	0.0	4.42E-04
	T	5.20E-07	5.25E-07	3.97E-03	6.21E-03	6.17E-03	5.16E-03	5.20E-07	4.52E-07	3.88E-07	4.40E-07	4.43E-04
SKIN	G	3.41E-07	3.42E-07	5.31E-07	5.31E-07	4.65E-07	5.72E-07	1.24E-06	3.93E-07	9.54E-07	5.62E-07	5.84E-07
	B	0.0	0.0	0.0	0.0	0.0	0.0	1.19E-02	0.0	0.0	0.0	4.42E-04
	T	3.41E-07	3.42E-07	5.31E-07	5.31E-07	4.65E-07	5.72E-07	1.19E-02	3.93E-07	9.54E-07	5.62E-07	4.42E-04
SPLEEN	G	3.47E-07	1.04E-05	4.76E-07	4.76E-07	6.13E-07	7.12E-07	4.34E-07	7.36E-05	4.14E-08	1.27E-07	9.82E-07
	B	0.0	0.0	0.0	0.0	0.0	0.0	0.0	1.72E-01	0.0	0.0	4.42E-04
	T	3.47E-07	1.04E-05	4.76E-07	4.76E-07	6.13E-07	7.12E-07	4.34E-07	1.72E-01	4.14E-08	1.27E-07	4.43E-04
TESTES	G	0.0	8.11E-08	4.26E-07	4.26E-07	1.98E-07	5.39E-07	5.73E-07	7.41E-08	2.05E-04	5.39E-09	9.97E-07
	B	0.0	0.0	0.0	0.0	0.0	0.0	0.0	0.0	8.83E-01	0.0	4.42E-04
	T	0.0	8.11E-08	4.26E-07	4.26E-07	1.98E-07	5.39E-07	5.73E-07	7.41E-08	8.84E-01	5.39E-09	4.43E-04
THYMUS	G	5.14E-08	3.57E-07	4.16E-07	4.16E-07	4.98E-07	3.55E-07	4.12E-07	2.92E-07	1.33E-08	2.35E-06	9.16E-07
	B	0.0	0.0	0.0	0.0	0.0	0.0	0.0	0.0	0.0	0.0	4.42E-04
	T	5.14E-08	3.57E-07	4.16E-07	4.16E-07	4.98E-07	3.55E-07	4.12E-07	2.92E-07	1.33E-08	2.35E-06	4.43E-04
THYROID	G	1.95E-08	6.53E-08	4.71E-07	4.71E-07	5.07E-07	3.66E-07	4.39E-07	1.07E-07	5.39E-09	2.80E-04	8.78E-07
	B	0.0	0.0	0.0	0.0	0.0	0.0	0.0	0.0	0.0	1.55E 00	4.42E-04
	T	1.95E-08	6.53E-08	4.71E-07	4.71E-07	5.07E-07	3.66E-07	4.39E-07	1.07E-07	5.39E-09	1.55E 00	4.43E-04
UTERUS	G	9.52E-06	3.62E-07	4.94E-07	4.94E-07	9.85E-07	3.43E-07	4.42E-07	2.76E-07	0.0	1.87E-08	1.25E-06
	B	0.0	0.0	0.0	0.0	0.0	0.0	0.0	0.0	0.0	0.0	4.42E-04
	T	9.52E-06	3.62E-07	4.94E-07	4.94E-07	9.85E-07	3.43E-07	4.42E-07	2.76E-07	0.0	1.87E-08	4.43E-04
T BODY	G	1.15E-06	1.13E-06	8.52E-07	8.52E-07	9.38E-07	7.59E-07	5.71E-07	9.90E-07	8.54E-07	7.73E-07	8.52E-07
	B	4.42E-04	4.42E-04	4.42E-04	4.42E-04	4.42E-04	4.42E-04	4.42E-04	4.42E-04	4.42E-04	4.42E-04	4.42E-04
	T	4.43E-04	4.43E-04	4.43E-04	4.43E-04	4.43E-04	4.42E-04	4.42E-04	4.43E-04	4.43E-04	4.42E-04	4.43E-04

*"MUSCLE" VALUES MAY BE USED FOR "SEPARABLE FAT" WITH ADJUSTMENT (SEE TEXT)
PRINCIPLE REFERENCE-LEDERER, C. M. ET AL., TABLE OF ISOTOPES, 6TH ED.
DATE DECAY DATA REVIEWED-DECEMBER 1968

S, AVERAGE DOSE EQUIVALENT PER UNIT ACCUMULATED ACTIVITY (REM/UCI-DAY), FOR 39-YTTRIUM-92 (TR=3.530E 00 HOURS)

DATE OF TABLE 11-27-74

TARGET ORGANS		SOURCE ORGANS										
		ADRENALS	BLAD CON	S CONT	SI+CONT	ULI CONT	LLI CONT	KIDNEYS	LIVER	LUNG	RESP LYM NODE	MUSCLE*
ADRENALS	G	1.87E-02	1.05E-05	1.02E-04	4.95E-05	4.86E-05	2.06E-05	4.98E-04	1.94E-04	9.28E-05	9.28E-05	6.27E-05
	B	5.30E 00	0.0	0.0	0.0	0.0	0.0	0.0	0.0	0.0	0.0	0.0
	T	5.32E 00	1.05E-05	1.02E-04	4.95E-05	4.86E-05	2.06E-05	4.98E-04	1.94E-04	9.28E-05	9.28E-05	6.27E-05
BLAD WALL	G	9.73E-06	2.84E-03	1.99E-05	1.09E-04	8.18E-05	2.24E-04	1.89E-05	9.59E-06	3.84E-06	3.84E-06	7.21E-05
	B	0.0	1.85E-01	0.0	0.0	0.0	0.0	0.0	0.0	0.0	0.0	0.0
	T	9.73E-06	1.88E-01	1.99E-05	1.09E-04	8.18E-05	2.24E-04	1.89E-05	9.59E-06	3.84E-06	3.84E-06	7.21E-05
GI TRACT S WALL	G	1.18E-04	2.01E-05	2.06E-03	1.42E-04	1.42E-04	6.53E-05	1.31E-04	8.02E-05	7.96E-05	7.96E-05	5.79E-05
	B	0.0	0.0	1.48E-01	0.0	0.0	0.0	0.0	0.0	0.0	0.0	0.0
	T	1.18E-04	2.01E-05	1.50E-01	1.42E-04	1.42E-04	6.53E-05	1.31E-04	8.02E-05	7.96E-05	7.96E-05	5.79E-05
SI+CONT	G	4.07E-05	1.10E-04	1.03E-04	1.22E-03	6.34E-04	3.58E-04	1.14E-04	6.56E-05	1.33E-05	1.33E-05	6.31E-05
	B	0.0	0.0	0.0	9.27E-02	0.0	0.0	0.0	0.0	0.0	0.0	0.0
	T	4.07E-05	1.10E-04	1.03E-04	9.39E-02	6.34E-04	3.58E-04	1.14E-04	6.56E-05	1.33E-05	1.33E-05	6.31E-05
ULI WALL	G	4.46E-05	8.26E-05	1.31E-04	9.08E-04	1.73E-03	1.65E-04	1.17E-04	9.64E-05	1.74E-05	1.74E-05	6.68E-05
	B	0.0	0.0	0.0	0.0	1.69E-01	0.0	0.0	0.0	0.0	0.0	0.0
	T	4.46E-05	8.26E-05	1.31E-04	9.08E-04	1.70E-01	1.65E-04	1.17E-04	9.64E-05	1.74E-05	1.74E-05	6.68E-05
LLI WALL	G	1.27E-05	2.74E-04	5.67E-05	2.75E-04	1.28E-04	2.05E-03	3.79E-05	1.28E-05	3.61E-06	3.61E-06	6.90E-05
	B	0.0	0.0	0.0	0.0	0.0	2.75E-01	0.0	0.0	0.0	0.0	0.0
	T	1.27E-05	2.74E-04	5.67E-05	2.75E-04	1.28E-04	2.77E-01	3.79E-05	1.28E-05	3.61E-06	3.61E-06	6.90E-05
KIDNEYS	G	4.46E-04	1.66E-05	1.33E-04	1.26E-04	1.16E-04	3.83E-05	2.88E-03	1.51E-04	4.24E-05	4.24E-05	5.92E-05
	B	0.0	0.0	0.0	0.0	0.0	0.0	2.39E-01	0.0	0.0	0.0	0.0
	T	4.46E-04	1.66E-05	1.33E-04	1.26E-04	1.16E-04	3.83E-05	2.42E-01	1.51E-04	4.24E-05	4.24E-05	5.92E-05
LIVER	G	1.92E-04	1.26E-05	8.11E-05	7.60E-05	1.02E-04	1.67E-05	1.56E-04	1.02E-03	9.68E-05	9.68E-05	4.62E-05
	B	0.0	0.0	0.0	0.0	0.0	0.0	0.0	4.12E-02	0.0	0.0	0.0
	T	1.92E-04	1.26E-05	8.11E-05	7.60E-05	1.02E-04	1.67E-05	1.56E-04	4.22E-02	9.68E-05	9.68E-05	4.62E-05
LUNGS	G	9.71E-05	3.38E-06	7.30E-05	1.44E-05	1.71E-05	6.53E-06	4.05E-05	9.98E-05	5.77E-04	5.77E-04	5.43E-05
	B	0.0	0.0	0.0	0.0	0.0	0.0	0.0	0.0	7.42E-02	7.42E-02	0.0
	T	9.71E-05	3.38E-06	7.30E-05	1.44E-05	1.71E-05	6.53E-06	4.05E-05	9.98E-05	7.47E-02	7.47E-02	5.43E-05
RESP LYM NODE	G	9.71E-05	3.38E-06	7.30E-05	1.44E-05	1.71E-05	6.53E-06	4.05E-05	9.98E-05	5.77E-04	5.77E-04	5.43E-05
	B	0.0	0.0	0.0	0.0	0.0	0.0	0.0	0.0	7.42E-02	4.94E 00	0.0
	T	9.71E-05	3.38E-06	7.30E-05	1.44E-05	1.71E-05	6.53E-06	4.05E-05	9.98E-05	7.47E-02	4.95E 00	5.43E-05
MUSCLE*	G	6.27E-05	7.21E-05	5.79E-05	6.31E-05	6.05E-05	6.90E-05	5.92E-05	4.62E-05	5.43E-05	5.43E-05	6.24E-05
	B	0.0	0.0	0.0	0.0	0.0	0.0	0.0	0.0	0.0	0.0	2.65E-03
	T	6.27E-05	7.21E-05	5.79E-05	6.31E-05	6.05E-05	6.90E-05	5.92E-05	4.62E-05	5.43E-05	5.43E-05	2.71E-03
OVARIES	G	1.86E-05	2.19E-04	4.97E-05	3.85E-04	3.31E-04	6.78E-04	6.01E-05	2.99E-05	7.18E-06	7.18E-06	8.06E-05
	B	0.0	0.0	0.0	0.0	0.0	0.0	0.0	0.0	0.0	0.0	0.0
	T	1.86E-05	2.19E-04	4.97E-05	3.85E-04	3.31E-04	6.78E-04	6.01E-05	2.99E-05	7.18E-06	7.18E-06	8.06E-05

39-YTTRIUM-92 CONTINUED

TARGET ORGANS		SOURCE ORGANS										
		ADRENALS	BLAD CON	S CONT	SI+CONT	ULI CONT	LLI CONT	KIDNEYS	LIVER	LUNG	RESP LYM NODE	MUSCLE*
PANCREAS	G	3.51E-04	1.20E-05	6.73E-04	7.98E-05	8.36E-05	2.98E-05	2.73E-04	1.73E-04	9.65E-05	9.65E-05	7.24E-05
	B	0.0	0.0	0.0	0.0	0.0	0.0	0.0	0.0	0.0	0.0	0.0
	T	3.51E-04	1.20E-05	6.73E-04	7.98E-05	8.36E-05	2.98E-05	2.73E-04	1.73E-04	9.65E-05	9.65E-05	7.24E-05
SKELETON BONE	G	5.49E-05	2.29E-05	2.40E-05	3.18E-05	2.84E-05	4.12E-05	3.95E-05	2.95E-05	3.99E-05	3.99E-05	4.62E-05
	B	0.0	0.0	0.0	0.0	0.0	0.0	0.0	0.0	0.0	0.0	0.0
	T	5.49E-05	2.29E-05	2.40E-05	3.18E-05	2.84E-05	4.12E-05	3.95E-05	2.95E-05	3.99E-05	3.99E-05	4.62E-05
R MARROW	G	9.71E-05	4.78E-05	4.04E-05	9.81E-05	8.24E-05	1.22E-04	9.90E-05	4.20E-05	5.06E-05	5.06E-05	5.38E-05
	B	0.0	0.0	0.0	0.0	0.0	0.0	0.0	0.0	0.0	0.0	0.0
	T	9.71E-05	4.78E-05	4.04E-05	9.81E-05	8.24E-05	1.22E-04	9.90E-05	4.20E-05	5.06E-05	5.06E-05	5.38E-05
Y MARROW	G	5.34E-05	2.12E-05	3.35E-05	4.37E-05	4.02E-05	5.07E-05	4.89E-05	4.38E-05	4.17E-05	4.17E-05	4.40E-05
	B	0.0	0.0	0.0	0.0	0.0	0.0	0.0	0.0	0.0	0.0	0.0
	T	5.34E-05	2.12E-05	3.35E-05	4.37E-05	4.02E-05	5.07E-05	4.89E-05	4.38E-05	4.17E-05	4.17E-05	4.40E-05
T E CL	G	5.49E-05	2.29E-05	2.40E-05	3.18E-05	2.84E-05	4.12E-05	3.95E-05	2.95E-05	3.99E-05	3.99E-05	4.62E-05
	B	0.0	0.0	0.0	0.0	0.0	0.0	0.0	0.0	0.0	0.0	0.0
	T	5.49E-05	2.29E-05	2.40E-05	3.18E-05	2.84E-05	4.12E-05	3.95E-05	2.95E-05	3.99E-05	3.99E-05	4.62E-05
SKIN	G	3.05E-05	2.90E-05	2.58E-05	2.42E-05	2.36E-05	2.63E-05	2.80E-05	2.61E-05	2.89E-05	2.89E-05	3.91E-05
	B	0.0	0.0	0.0	0.0	0.0	0.0	0.0	0.0	0.0	0.0	0.0
	T	3.05E-05	2.90E-05	2.58E-05	2.42E-05	2.36E-05	2.63E-05	2.80E-05	2.61E-05	2.89E-05	2.89E-05	3.91E-05
SPLEEN	G	2.45E-04	1.01E-05	3.81E-04	6.53E-05	5.70E-05	4.26E-05	3.35E-04	4.46E-05	8.55E-05	8.55E-05	6.04E-05
	B	0.0	0.0	0.0	0.0	0.0	0.0	0.0	0.0	0.0	0.0	0.0
	T	2.45E-04	1.01E-05	3.81E-04	6.53E-05	5.70E-05	4.26E-05	3.35E-04	4.46E-05	8.55E-05	8.55E-05	6.04E-05
TESTES	G	3.76E-06	1.94E-04	6.15E-06	2.18E-05	2.20E-05	6.70E-05	7.19E-06	8.64E-06	1.52E-06	1.52E-06	5.18E-05
	B	0.0	0.0	0.0	0.0	0.0	0.0	0.0	0.0	0.0	0.0	0.0
	T	3.76E-06	1.94E-04	6.15E-06	2.18E-05	2.20E-05	6.70E-05	7.19E-06	8.64E-06	1.52E-06	1.52E-06	5.18E-05
THYMUS	G	2.84E-05	1.92E-06	2.93E-05	6.70E-06	7.24E-06	3.13E-06	8.53E-06	3.58E-05	1.69E-04	1.69E-04	6.72E-05
	B	0.0	0.0	0.0	0.0	0.0	0.0	0.0	0.0	0.0	0.0	0.0
	T	2.84E-05	1.92E-06	2.93E-05	6.70E-06	7.24E-06	3.13E-06	8.53E-06	3.58E-05	1.69E-04	1.69E-04	6.72E-05
THYROID	G	9.45E-06	7.15E-07	7.26E-06	2.30E-06	2.44E-06	1.17E-06	4.82E-06	8.53E-06	5.16E-05	5.16E-05	5.61E-05
	B	0.0	0.0	0.0	0.0	0.0	0.0	0.0	0.0	0.0	0.0	0.0
	T	9.45E-06	7.15E-07	7.26E-06	2.30E-06	2.44E-06	1.17E-06	4.82E-06	8.53E-06	5.16E-05	5.16E-05	5.61E-05
UTERUS	G	2.04E-05	5.80E-04	4.03E-05	3.40E-04	1.94E-04	2.29E-04	3.76E-05	1.91E-05	6.48E-06	6.48E-06	9.62E-05
	B	0.0	0.0	0.0	0.0	0.0	0.0	0.0	0.0	0.0	0.0	0.0
	T	2.04E-05	5.80E-04	4.03E-05	3.40E-04	1.94E-04	2.29E-04	3.76E-05	1.91E-05	6.48E-06	6.48E-06	9.62E-05
T BODY	G	6.86E-05	7.54E-05	7.22E-05	7.91E-05	7.75E-05	7.69E-05	6.92E-05	6.91E-05	5.87E-05	5.87E-05	5.95E-05
	B	1.06E-03	1.19E-04	3.18E-04	8.48E-04	5.06E-04	6.28E-04	1.06E-03	1.06E-03	1.06E-03	1.06E-03	1.06E-03
	T	1.13E-03	1.95E-04	3.90E-04	9.27E-04	5.83E-04	7.05E-04	1.13E-03	1.13E-03	1.12E-03	1.12E-03	1.12E-03

CONTINUED NEXT PAGE

39-YTTRIUM-92 CONTINUED

TARGET ORGANS		SOURCE ORGANS										
		OVARIES	PANCREAS	COR BONE	CAN BONE	R MARROW	Y MARROW	SKIN	SPLEEN	TESTES	THYROID	T BODY
ADRENALS	G	2.35E-05	2.95E-04	7.73E-05	7.73E-05	1.06E-04	3.36E-05	3.42E-05	2.78E-04	3.76E-06	9.16E-06	8.92E-05
	B	0.0	0.0	0.0	0.0	0.0	0.0	0.0	0.0	0.0	0.0	1.06E-03
	T	2.35E-05	2.95E-04	7.73E-05	7.73E-05	1.06E-04	3.36E-05	3.42E-05	2.78E-04	3.76E-06	9.16E-06	1.15E-03
BLAD WALL	G	2.80E-04	7.84E-06	2.30E-05	2.30E-05	4.38E-05	1.41E-05	3.23E-05	1.28E-05	2.08E-04	7.18E-07	8.05E-05
	B	0.0	0.0	0.0	0.0	0.0	0.0	0.0	0.0	0.0	0.0	1.06E-03
	T	2.80E-04	7.84E-06	2.30E-05	2.30E-05	4.38E-05	1.41E-05	3.23E-05	1.28E-05	2.08E-04	7.18E-07	1.14E-03
GI TRACT S WALL	G	3.47E-05	6.78E-04	2.33E-05	2.33E-05	4.73E-05	3.11E-05	2.76E-05	3.86E-04	4.17E-06	6.25E-06	6.67E-05
	B	0.0	0.0	0.0	0.0	0.0	0.0	0.0	0.0	0.0	0.0	1.06E-03
	T	3.47E-05	6.78E-04	2.33E-05	2.33E-05	4.73E-05	3.11E-05	2.76E-05	3.86E-04	4.17E-06	6.25E-06	1.13E-03
SI+CONT	G	4.55E-04	7.40E-05	3.39E-05	3.39E-05	1.05E-04	4.24E-05	2.48E-05	5.84E-05	2.27E-05	1.65E-06	7.93E-05
	B	0.0	0.0	0.0	0.0	0.0	0.0	0.0	0.0	0.0	0.0	1.06E-03
	T	4.55E-04	7.40E-05	3.39E-05	3.39E-05	1.05E-04	4.24E-05	2.48E-05	5.84E-05	2.27E-05	1.65E-06	1.14E-03
ULI WALL	G	4.29E-04	8.97E-05	3.17E-05	3.17E-05	7.83E-05	3.71E-05	2.63E-05	5.85E-05	1.66E-05	1.88E-06	7.55E-05
	B	0.0	0.0	0.0	0.0	0.0	0.0	0.0	0.0	0.0	0.0	1.06E-03
	T	4.29E-04	8.97E-05	3.17E-05	3.17E-05	7.83E-05	3.71E-05	2.63E-05	5.85E-05	1.66E-05	1.88E-06	1.14E-03
LLI WALL	G	5.45E-04	2.47E-05	4.27E-05	4.27E-05	1.21E-04	3.55E-05	2.70E-05	2.70E-05	9.97E-05	1.01E-06	8.04E-05
	B	0.0	0.0	0.0	0.0	0.0	0.0	0.0	0.0	0.0	0.0	1.06E-03
	T	5.45E-04	2.47E-05	4.27E-05	4.27E-05	1.21E-04	3.55E-05	2.70E-05	2.70E-05	9.97E-05	1.01E-06	1.14E-03
KIDNEYS	G	4.56E-05	2.46E-04	4.58E-05	4.58E-05	9.94E-05	4.85E-05	3.21E-05	3.33E-04	6.16E-06	5.16E-06	7.18E-05
	B	0.0	0.0	0.0	0.0	0.0	0.0	0.0	0.0	0.0	0.0	1.06E-03
	T	4.56E-05	2.46E-04	4.58E-05	4.58E-05	9.94E-05	4.85E-05	3.21E-05	3.33E-04	6.16E-06	5.16E-06	1.13E-03
LIVER	G	2.73E-05	1.63E-04	3.02E-05	3.02E-05	4.21E-05	4.59E-05	2.84E-05	4.47E-05	4.30E-06	8.28E-06	7.20E-05
	B	0.0	0.0	0.0	0.0	0.0	0.0	0.0	0.0	0.0	0.0	1.06E-03
	T	2.73E-05	1.63E-04	3.02E-05	3.02E-05	4.21E-05	4.59E-05	2.84E-05	4.47E-05	4.30E-06	8.28E-06	1.13E-03
LUNGS	G	6.53E-06	9.37E-05	4.10E-05	4.10E-05	5.07E-05	4.26E-05	2.97E-05	8.64E-05	1.33E-06	4.64E-05	5.79E-05
	B	0.0	0.0	0.0	0.0	0.0	0.0	0.0	0.0	0.0	0.0	1.06E-03
	T	6.53E-06	9.37E-05	4.10E-05	4.10E-05	5.07E-05	4.26E-05	2.97E-05	8.64E-05	1.33E-06	4.64E-05	1.12E-03
RESP LYM NODE	G	6.53E-06	9.37E-05	4.10E-05	4.10E-05	5.07E-05	4.26E-05	2.97E-05	8.64E-05	1.33E-06	4.64E-05	5.79E-05
	B	0.0	0.0	0.0	0.0	0.0	0.0	0.0	0.0	0.0	0.0	1.06E-03
	T	6.53E-06	9.37E-05	4.10E-05	4.10E-05	5.07E-05	4.26E-05	2.97E-05	8.64E-05	1.33E-06	4.64E-05	1.12E-03
MUSCLE*	G	8.06E-05	7.24E-05	4.62E-05	4.62E-05	5.40E-05	4.26E-05	3.91E-05	6.04E-05	5.18E-05	5.61E-05	5.95E-05
	B	0.0	0.0	0.0	0.0	0.0	0.0	0.0	0.0	0.0	0.0	1.06E-03
	T	8.06E-05	7.24E-05	4.62E-05	4.62E-05	5.40E-05	4.26E-05	3.91E-05	6.04E-05	5.18E-05	5.61E-05	1.12E-03
OVARIES	G	3.05E-02	3.54E-05	4.00E-05	4.00E-05	1.24E-04	3.84E-05	2.32E-05	2.70E-05	1.41E-50	1.20E-06	6.43E-05
	B	6.74E 00	0.0	0.0	0.0	0.0	0.0	0.0	0.0	0.0	0.0	1.06E-03
	T	6.77E 00	3.54E-05	4.00E-05	4.00E-05	1.24E-04	3.84E-05	2.32E-05	2.70E-05	1.41E-50	1.20E-06	1.12E-03

39-YTTRIUM-92 CONTINUED

TARGET ORGANS		SOURCE ORGANS										
		OVARIES	PANCREAS	COR BONE	CAN BONE	R MARROW	Y MARROW	SKIN	SPLEEN	TESTES	THYROID	T BODY
PANCREAS	G	3.25E-05	8.49E-03	4.25E-05	4.25E-05	5.25E-05	4.45E-05	2.20E-05	7.33E-04	4.36E-06	6.38E-06	6.84E-05
	B	0.0	7.42E-01	0.0	0.0	0.0	0.0	0.0	0.0	0.0	0.0	1.06E-03
	T	3.25E-05	7.50E-01	4.25E-05	4.25E-05	5.25E-05	4.45E-05	2.20E-05	7.33E-04	4.36E-06	6.38E-06	1.13E-03
SKELETON BONE	G	3.66E-05	3.67E-05	1.39E-04	1.39E-04	9.25E-05	1.04E-04	3.57E-05	3.14E-05	2.70E-05	3.06E-05	5.92E-05
	B	0.0	0.0	1.48E-02	8.48E-03	4.24E-03	0.0	0.0	0.0	0.0	0.0	1.06E-03
	T	3.66E-05	3.67E-05	1.50E-02	8.61E-03	4.33E-03	1.04E-04	3.57E-05	3.14E-05	2.70E-05	3.06E-05	1.12E-03
R MARROW	G	1.19E-04	6.84E-05	1.26E-04	1.26E-04	2.93E-04	1.06E-04	3.33E-05	4.57E-05	2.12E-05	3.32E-05	6.52E-05
	B	0.0	0.0	1.21E-03	2.12E-02	3.53E-02	0.0	0.0	0.0	0.0	0.0	1.06E-03
	T	1.19E-04	6.84E-05	1.34E-03	2.13E-02	3.56E-02	1.06E-04	3.33E-05	4.57E-05	2.12E-05	3.32E-05	1.12E-03
Y MARROW	G	4.83E-05	4.32E-05	1.20E-04	1.20E-04	1.14E-04	1.76E-04	3.79E-05	4.66E-05	1.19E-05	1.67E-05	5.53E-05
	B	0.0	0.0	0.0	0.0	0.0	4.94E-02	0.0	0.0	0.0	0.0	1.06E-03
	T	4.83E-05	4.32E-05	1.20E-04	1.20E-04	1.14E-04	4.96E-02	3.79E-05	4.66E-05	1.19E-05	1.67E-05	1.11E-03
T E CL	G	3.66E-05	3.67E-05	1.39E-04	1.39E-04	1.24E-04	1.14E-04	3.57E-05	3.14E-05	2.70E-05	3.06E-05	5.92E-05
	B	0.0	0.0	9.07E-03	1.27E-02	1.63E-02	1.24E-02	0.0	0.0	0.0	0.0	1.06E-03
	T	3.66E-05	3.67E-05	9.21E-03	1.28E-02	1.64E-02	1.25E-02	3.57E-05	3.14E-05	2.70E-05	3.06E-05	1.12E-03
SKIN	G	2.33E-05	2.32E-05	3.64E-05	3.64E-05	3.18E-05	3.98E-05	8.57E-05	2.69E-05	6.56E-05	3.81E-05	3.95E-05
	B	0.0	0.0	0.0	0.0	0.0	0.0	2.85E-02	0.0	0.0	0.0	1.06E-03
	T	2.33E-05	2.32E-05	3.64E-05	3.64E-05	3.18E-05	3.98E-05	2.86E-02	2.69E-05	6.56E-05	3.81E-05	1.10E-03
SPLEEN	G	2.56E-05	7.35E-04	3.43E-05	3.43E-05	4.14E-05	4.71E-05	3.03E-05	5.16E-03	3.39E-06	8.11E-06	7.00E-05
	B	0.0	0.0	0.0	0.0	0.0	0.0	0.0	4.12E-01	0.0	0.0	1.06E-03
	T	2.56E-05	7.35E-04	3.43E-05	3.43E-05	4.14E-05	4.71E-05	3.03E-05	4.17E-01	3.39E-06	8.11E-06	1.13E-03
TESTES	G	1.41E-50	4.98E-06	2.85E-05	2.85E-05	1.59E-05	3.80E-05	3.86E-05	4.85E-06	1.44E-02	3.15E-07	7.10E-05
	B	0.0	0.0	0.0	0.0	0.0	0.0	0.0	0.0	2.12E 00	0.0	1.06E-03
	T	1.41E-50	4.98E-06	2.85E-05	2.85E-05	1.59E-05	3.80E-05	3.86E-05	4.85E-06	2.13E 00	3.15E-07	1.13E-03
THYMUS	G	3.31E-06	2.37E-05	3.10E-05	3.10E-05	3.00E-05	2.13E-05	3.06E-05	2.29E-05	8.08E-07	1.65E-04	6.07E-05
	B	0.0	0.0	0.0	0.0	0.0	0.0	0.0	0.0	0.0	0.0	1.06E-03
	T	3.31E-06	2.37E-05	3.10E-05	3.10E-05	3.00E-05	2.13E-05	3.06E-05	2.29E-05	8.08E-07	1.65E-04	1.12E-03
THYROID	G	1.20E-06	4.41E-06	3.14E-05	3.14E-05	3.69E-05	2.37E-05	3.13E-05	7.08E-06	3.15E-07	1.94E-02	6.16E-05
	B	0.0	0.0	0.0	0.0	0.0	0.0	0.0	0.0	0.0	3.71E 00	1.06E-03
	T	1.20E-06	4.41E-06	3.14E-05	3.14E-05	3.69E-05	2.37E-05	3.13E-05	7.08E-06	3.15E-07	3.73E 00	1.12E-03
UTERUS	G	6.79E-04	2.54E-05	3.33E-05	3.33E-05	6.91E-05	2.61E-05	2.95E-05	2.11E-05	1.41E-50	1.15E-06	8.74E-05
	B	0.0	0.0	0.0	0.0	0.0	0.0	0.0	0.0	0.0	0.0	1.06E-03
	T	6.79E-04	2.54E-05	3.33E-05	3.33E-05	6.91E-05	2.61E-05	2.95E-05	2.11E-05	1.41E-50	1.15E-06	1.15E-03
T BODY	G	8.04E-05	7.87E-05	5.90E-05	5.90E-05	6.51E-05	5.26E-05	3.92E-05	6.88E-05	5.90E-05	5.36E-05	5.92E-05
	B	1.06E-03	1.06E-03	1.06E-03	1.06E-03	1.06E-03	1.06E-03	1.06E-03	1.06E-03	1.06E-03	1.06E-03	1.06E-03
	T	1.14E-03	1.14E-03	1.12E-03	1.12E-03	1.12E-03	1.11E-03	1.10E-03	1.13E-03	1.12E-03	1.11E-03	1.12E-03

*"MUSCLE" VALUES MAY BE USED FOR "SEPARABLE FAT" WITH ADJUSTMENT (SEE TEXT)
PRINCIPLE REFERENCE-LEDERER, C. M. ET AL., TABLE OF ISOTOPES, 6TH ED.
DATE DECAY DATA REVIEWED-DECEMBER 1968

S, AVERAGE DOSE EQUIVALENT PER UNIT ACCUMULATED ACTIVITY (REM/UCI-DAY), FOR 39-YTTRIUM-93 (TR=1.025E 01 HOURS)

DATE OF TABLE 11-27-74

TARGET ORGANS		SOURCE ORGANS										
		ADRENALS	BLAD CON	S CONT	SI+CONT	ULI CONT	LLI CONT	KIDNEYS	LIVER	LUNG	RESP LYM NODE	MUSCLE*
ADRENALS	G	5.49E-03	3.09E-06	3.09E-05	1.71E-05	1.33E-05	6.15E-06	1.38E-04	6.16E-05	2.43E-05	2.43E-05	1.86E-05
	B	4.32E 00	0.0	0.0	0.0	0.0	0.0	0.0	0.0	0.0	0.0	0.0
	T	4.32E 00	3.09E-06	3.09E-05	1.71E-05	1.33E-05	6.15E-06	1.38E-04	6.16E-05	2.43E-05	2.43E-05	1.86E-05
BLAD WALL	G	2.82E-06	8.50E-04	4.73E-06	3.34E-05	2.68E-05	7.16E-05	4.98E-06	3.03E-06	1.11E-06	1.11E-06	2.17E-05
	B	0.0	1.51E-01	0.0	0.0	0.0	0.0	0.0	0.0	0.0	0.0	0.0
	T	2.82E-06	1.52E-01	4.73E-06	3.34E-05	2.68E-05	7.16E-05	4.98E-06	3.03E-06	1.11E-06	1.11E-06	2.17E-05
GI TRACT S WALL	G	3.37E-05	5.87E-06	6.13E-04	4.30E-05	4.35E-05	2.14E-05	4.09E-05	2.46E-05	2.46E-05	2.46E-05	1.73E-05
	B	0.0	0.0	1.21E-01	0.0	0.0	0.0	0.0	0.0	0.0	0.0	0.0
	T	3.37E-05	5.87E-06	1.21E-01	4.30E-05	4.35E-05	2.14E-05	4.09E-05	2.46E-05	2.46E-05	2.46E-05	1.73E-05
SI+CONT	G	1.22E-05	3.44E-05	3.17E-05	3.63E-04	1.90E-04	1.09E-04	3.45E-05	1.99E-05	3.90E-06	3.90E-06	1.89E-05
	B	0.0	0.0	0.0	7.55E-02	0.0	0.0	0.0	0.0	0.0	0.0	0.0
	T	1.22E-05	3.44E-05	3.17E-05	7.59E-02	1.90E-04	1.09E-04	3.45E-05	1.99E-05	3.90E-06	3.90E-06	1.89E-05
ULI WALL	G	1.34E-05	2.59E-05	3.93E-05	2.74E-04	5.11E-04	4.92E-05	3.40E-05	2.95E-05	4.87E-06	4.87E-06	1.99E-05
	B	0.0	0.0	0.0	0.0	1.37E-01	0.0	0.0	0.0	0.0	0.0	0.0
	T	1.34E-05	2.59E-05	3.93E-05	2.74E-04	1.38E-01	4.92E-05	3.40E-05	2.95E-05	4.87E-06	4.87E-06	1.99E-05
LLI WALL	G	4.28E-06	8.46E-05	1.67E-05	8.49E-05	3.67E-05	6.06E-04	1.15E-05	3.73E-06	1.13E-06	1.13E-06	2.08E-05
	B	0.0	0.0	0.0	0.0	0.0	2.24E-01	0.0	0.0	0.0	0.0	0.0
	T	4.28E-06	8.46E-05	1.67E-05	8.49E-05	3.67E-05	2.24E-01	1.15E-05	3.73E-06	1.13E-06	1.13E-06	2.08E-05
KIDNEYS	G	1.36E-04	4.75E-06	4.02E-05	3.74E-05	3.34E-05	1.26E-05	8.45E-04	4.61E-05	1.14E-05	1.14E-05	1.77E-05
	B	0.0	0.0	0.0	0.0	0.0	0.0	1.95E-01	0.0	0.0	0.0	0.0
	T	1.36E-04	4.75E-06	4.02E-05	3.74E-05	3.34E-05	1.26E-05	1.96E-01	4.61E-05	1.14E-05	1.14E-05	1.77E-05
LIVER	G	5.87E-05	3.91E-06	2.49E-05	2.29E-05	3.10E-05	4.72E-06	4.69E-05	3.02E-04	2.90E-05	2.90E-05	1.38E-05
	B	0.0	0.0	0.0	0.0	0.0	0.0	0.0	3.36E-02	0.0	0.0	0.0
	T	5.87E-05	3.91E-06	2.49E-05	2.29E-05	3.10E-05	4.72E-06	4.69E-05	3.39E-02	2.90E-05	2.90E-05	1.38E-05
LUNGS	G	2.94E-05	9.58E-07	2.14E-05	4.23E-06	4.78E-06	2.13E-06	1.16E-05	2.99E-05	1.72E-04	1.72E-04	1.62E-05
	B	0.0	0.0	0.0	0.0	0.0	0.0	0.0	0.0	6.04E-02	6.04E-02	0.0
	T	2.94E-05	9.58E-07	2.14E-05	4.23E-06	4.78E-06	2.13E-06	1.16E-05	2.99E-05	6.06E-02	6.06E-02	1.62E-05
RESP LYM NODE	G	2.94E-05	9.58E-07	2.14E-05	4.23E-06	4.78E-06	2.13E-06	1.16E-05	2.99E-05	1.72E-04	1.72E-04	1.62E-05
	B	0.0	0.0	0.0	0.0	0.0	0.0	0.0	0.0	6.04E-02	4.03E 00	0.0
	T	2.94E-05	9.58E-07	2.14E-05	4.23E-06	4.78E-06	2.13E-06	1.16E-05	2.99E-05	6.06E-02	4.03E 00	1.62E-05
MUSCLE*	G	1.86E-05	2.17E-05	1.73E-05	1.89E-05	1.83E-05	2.08E-05	1.77E-05	1.38E-05	1.62E-05	1.62E-05	1.84E-05
	B	0.0	0.0	0.0	0.0	0.0	0.0	0.0	0.0	0.0	0.0	2.16E-03
	T	1.86E-05	2.17E-05	1.73E-05	1.89E-05	1.83E-05	2.08E-05	1.77E-05	1.38E-05	1.62E-05	1.62E-05	2.18E-03
OVARIES	G	6.48E-06	7.45E-05	1.14E-05	1.11E-04	1.25E-04	2.11E-04	1.63E-05	8.15E-06	2.11E-06	2.11E-06	2.42E-05
	B	0.0	0.0	0.0	0.0	0.0	0.0	0.0	0.0	0.0	0.0	0.0
	T	6.48E-06	7.45E-05	1.14E-05	1.11E-04	1.25E-04	2.11E-04	1.63E-05	8.15E-06	2.11E-06	2.11E-06	2.42E-05

39-YTTRIUM-93 CONTINUED

TARGET ORGANS		SOURCE ORGANS										
		ADRENALS	BLAD CON	S CONT	SI+CONT	ULI CONT	LLI CONT	KIDNEYS	LIVER	LUNG	RESP LYM NODE	MUSCLE*
PANCREAS	G	1.04E-04	4.33E-06	2.02E-04	2.45E-05	2.76E-05	9.34E-06	7.56E-05	4.82E-05	2.85E-05	2.85E-05	2.18E-05
	B	0.0	0.0	0.0	0.0	0.0	0.0	0.0	0.0	0.0	0.0	0.0
	T	1.04E-04	4.33E-06	2.02E-04	2.45E-05	2.76E-05	9.34E-06	7.56E-05	4.82E-05	2.85E-05	2.85E-05	2.18E-05
SKELETON BONE	G	1.71E-05	7.60E-06	7.68E-06	1.02E-05	9.16E-06	1.32E-05	1.23E-05	9.51E-06	1.26E-05	1.26E-05	1.37E-05
	B	0.0	0.0	0.0	0.0	0.0	0.0	0.0	0.0	0.0	0.0	0.0
	T	1.71E-05	7.60E-06	7.68E-06	1.02E-05	9.16E-06	1.32E-05	1.23E-05	9.51E-06	1.26E-05	1.26E-05	1.37E-05
R MARROW	G	3.06E-05	1.60E-05	1.30E-05	3.17E-05	2.71E-05	3.89E-05	3.11E-05	1.37E-05	1.60E-05	1.60E-05	1.71E-05
	B	0.0	0.0	0.0	0.0	0.0	0.0	0.0	0.0	0.0	0.0	0.0
	T	3.06E-05	1.60E-05	1.30E-05	3.17E-05	2.71E-05	3.89E-05	3.11E-05	1.37E-05	1.60E-05	1.60E-05	1.71E-05
Y MARROW	G	1.68E-05	7.10E-06	1.07E-05	1.40E-05	1.29E-05	1.62E-05	1.52E-05	1.40E-05	1.32E-05	1.32E-05	1.37E-05
	B	0.0	0.0	0.0	0.0	0.0	0.0	0.0	0.0	0.0	0.0	0.0
	T	1.68E-05	7.10E-06	1.07E-05	1.40E-05	1.29E-05	1.62E-05	1.52E-05	1.40E-05	1.32E-05	1.32E-05	1.37E-05
T E CL	G	1.71E-05	7.60E-06	7.68E-06	1.02E-05	9.16E-06	1.32E-05	1.23E-05	9.51E-06	1.26E-05	1.26E-05	1.37E-05
	B	0.0	0.0	0.0	0.0	0.0	0.0	0.0	0.0	0.0	0.0	0.0
	T	1.71E-05	7.60E-06	7.68E-06	1.02E-05	9.16E-06	1.32E-05	1.23E-05	9.51E-06	1.26E-05	1.26E-05	1.37E-05
SKIN	G	8.59E-06	8.35E-06	7.61E-06	6.91E-06	6.94E-06	7.78E-06	8.33E-06	7.84E-06	8.48E-06	8.48E-06	1.13E-05
	B	0.0	0.0	0.0	0.0	0.0	0.0	0.0	0.0	0.0	0.0	0.0
	T	8.59E-06	8.35E-06	7.61E-06	6.91E-06	6.94E-06	7.78E-06	8.33E-06	7.84E-06	8.48E-06	8.48E-06	1.13E-05
SPLEEN	G	7.53E-05	3.25E-06	1.14E-04	2.00E-05	1.66E-05	1.22E-05	1.00E-04	1.29E-05	2.65E-05	2.65E-05	1.80E-05
	B	0.0	0.0	0.0	0.0	0.0	0.0	0.0	0.0	0.0	0.0	0.0
	T	7.53E-05	3.25E-06	1.14E-04	2.00E-05	1.66E-05	1.22E-05	1.00E-04	1.29E-05	2.65E-05	2.65E-05	1.80E-05
TESTES	G	1.09E-06	5.81E-05	1.74E-06	6.69E-06	6.21E-06	2.33E-05	2.10E-06	2.00E-06	4.46E-07	4.46E-07	1.64E-05
	B	0.0	0.0	0.0	0.0	0.0	0.0	0.0	0.0	0.0	0.0	0.0
	T	1.09E-06	5.81E-05	1.74E-06	6.69E-06	6.21E-06	2.33E-05	2.10E-06	2.00E-06	4.46E-07	4.46E-07	1.64E-05
THYMUS	G	8.05E-06	5.60E-07	6.61E-06	1.96E-06	2.12E-06	9.11E-07	2.50E-06	1.06E-05	4.98E-05	4.98E-05	2.51E-05
	B	0.0	0.0	0.0	0.0	0.0	0.0	0.0	0.0	0.0	0.0	0.0
	T	8.05E-06	5.60E-07	6.61E-06	1.96E-06	2.12E-06	9.11E-07	2.50E-06	1.06E-05	4.98E-05	4.98E-05	2.51E-05
THYROID	G	2.73E-06	2.17E-07	2.12E-06	6.72E-07	7.10E-07	3.49E-07	1.40E-06	2.73E-06	1.34E-05	1.34E-05	1.66E-05
	B	0.0	0.0	0.0	0.0	0.0	0.0	0.0	0.0	0.0	0.0	0.0
	T	2.73E-06	2.17E-07	2.12E-06	6.72E-07	7.10E-07	3.49E-07	1.40E-06	2.73E-06	1.34E-05	1.34E-05	1.66E-05
UTERUS	G	1.08E-05	1.77E-04	1.13E-05	1.03E-04	5.89E-05	7.17E-05	1.09E-05	6.13E-06	1.89E-06	1.89E-06	2.88E-05
	B	0.0	0.0	0.0	0.0	0.0	0.0	0.0	0.0	0.0	0.0	0.0
	T	1.08E-05	1.77E-04	1.13E-05	1.03E-04	5.89E-05	7.17E-05	1.09E-05	6.13E-06	1.89E-06	1.89E-06	2.88E-05
T BODY	G	2.05E-05	2.27E-05	2.16E-05	2.38E-05	2.33E-05	2.32E-05	2.07E-05	2.07E-05	1.76E-05	1.76E-05	1.75E-05
	B	8.63E-04	9.71E-05	2.59E-04	6.91E-04	4.12E-04	5.12E-04	8.63E-04	8.63E-04	8.63E-04	8.63E-04	8.63E-04
	T	8.84E-04	1.20E-04	2.81E-04	7.14E-04	4.35E-04	5.35E-04	8.84E-04	8.84E-04	8.81E-04	8.81E-04	8.81E-04

CONTINUED NEXT PAGE

39-YTTRIUM-93 CONTINUED

TARGET ORGANS		SOURCE ORGANS										
		OVARIES	PANCREAS	COR BONE	CAN BONE	R MARROW	Y MARROW	SKIN	SPLEEN	TESTES	THYROID	T BODY
ADRENALS	G	6.53E-06	8.93E-05	1.90E-05	1.90E-05	2.75E-05	1.32E-05	1.07E-05	8.03E-05	1.09E-06	2.69E-06	2.46E-05
	B	0.0	0.0	0.0	0.0	0.0	0.0	0.0	0.0	0.0	0.0	8.63E-04
	T	6.53E-06	8.93E-05	1.90E-05	1.90E-05	2.75E-05	1.32E-05	1.07E-05	8.03E-05	1.09E-06	2.69E-06	8.88E-04
BLAD WALL	G	8.07E-05	3.51E-06	7.06E-06	7.06E-06	1.07E-05	4.69E-06	8.86E-06	3.42E-06	6.01E-05	2.18E-07	2.22E-05
	B	0.0	0.0	0.0	0.0	0.0	0.0	0.0	0.0	0.0	0.0	8.63E-04
	T	8.07E-05	3.51E-06	7.06E-06	7.06E-06	1.07E-05	4.69E-06	8.86E-06	3.42E-06	6.01E-05	2.18E-07	8.86E-04
GI TRACT S WALL	G	1.12E-05	2.06E-04	7.15E-06	7.15E-06	1.31E-05	9.49E-06	7.92E-06	1.15E-04	1.35E-06	1.46E-06	2.07E-05
	B	0.0	0.0	0.0	0.0	0.0	0.0	0.0	0.0	0.0	0.0	8.63E-04
	T	1.12E-05	2.06E-04	7.15E-06	7.15E-06	1.31E-05	9.49E-06	7.92E-06	1.15E-04	1.35E-06	1.46E-06	8.84E-04
SI+CONT	G	1.38E-04	2.24E-05	9.93E-06	9.93E-06	3.15E-05	1.29E-05	7.14E-06	1.75E-05	6.76E-06	5.06E-07	2.37E-05
	B	0.0	0.0	0.0	0.0	0.0	0.0	0.0	0.0	0.0	0.0	8.63E-04
	T	1.38E-04	2.24E-05	9.93E-06	9.93E-06	3.15E-05	1.29E-05	7.14E-06	1.75E-05	6.76E-06	5.06E-07	8.87E-04
ULI WALL	G	1.30E-04	2.65E-05	9.50E-06	9.50E-06	2.48E-05	1.15E-05	7.35E-06	1.76E-05	6.29E-06	5.20E-07	2.23E-05
	B	0.0	0.0	0.0	0.0	0.0	0.0	0.0	0.0	0.0	0.0	8.63E-04
	T	1.30E-04	2.65E-05	9.50E-06	9.50E-06	2.48E-05	1.15E-05	7.35E-06	1.76E-05	6.29E-06	5.20E-07	8.86E-04
LLI WALL	G	1.67E-04	7.06E-06	1.25E-05	1.25E-05	3.82E-05	1.14E-05	7.83E-06	8.48E-06	3.16E-05	3.02E-07	2.51E-05
	B	0.0	0.0	0.0	0.0	0.0	0.0	0.0	0.0	0.0	0.0	8.63E-04
	T	1.67E-04	7.06E-06	1.25E-05	1.25E-05	3.82E-05	1.14E-05	7.83E-06	8.48E-06	3.16E-05	3.02E-07	8.88E-04
KIDNEYS	G	1.38E-05	7.36E-05	1.20E-05	1.20E-05	3.03E-05	1.39E-05	9.25E-06	1.02E-04	1.53E-06	1.35E-06	2.10E-05
	B	0.0	0.0	0.0	0.0	0.0	0.0	0.0	0.0	0.0	0.0	8.63E-04
	T	1.38E-05	7.36E-05	1.20E-05	1.20E-05	3.03E-05	1.39E-05	9.25E-06	1.02E-04	1.53E-06	1.35E-06	8.84E-04
LIVER	G	8.42E-06	4.92E-05	9.33E-06	9.33E-06	1.27E-05	1.35E-05	8.43E-06	1.34E-05	1.21E-06	2.61E-06	2.08E-05
	B	0.0	0.0	0.0	0.0	0.0	0.0	0.0	0.0	0.0	0.0	8.63E-04
	T	8.42E-06	4.92E-05	9.33E-06	9.33E-06	1.27E-05	1.35E-05	8.43E-06	1.34E-05	1.21E-06	2.61E-06	8.84E-04
LUNGS	G	1.85E-06	2.87E-05	1.25E-05	1.25E-05	1.50E-05	1.22E-05	8.81E-06	2.67E-05	3.67E-07	1.32E-05	1.71E-05
	B	0.0	0.0	0.0	0.0	0.0	0.0	0.0	0.0	0.0	0.0	8.63E-04
	T	1.85E-06	2.87E-05	1.25E-05	1.25E-05	1.50E-05	1.22E-05	8.81E-06	2.67E-05	3.67E-07	1.32E-05	8.80E-04
RESP LYM NODE	G	1.85E-06	2.87E-05	1.25E-05	1.25E-05	1.50E-05	1.22E-05	8.81E-06	2.67E-05	3.67E-07	1.32E-05	1.71E-05
	B	0.0	0.0	0.0	0.0	0.0	0.0	0.0	0.0	0.0	0.0	8.63E-04
	T	1.85E-06	2.87E-05	1.25E-05	1.25E-05	1.50E-05	1.22E-05	8.81E-06	2.67E-05	3.67E-07	1.32E-05	8.80E-04
MUSCLE*	G	2.42E-05	2.18E-05	1.37E-05	1.37E-05	1.61E-05	1.25E-05	1.13E-05	1.80E-05	1.64E-05	1.66E-05	1.75E-05
	B	0.0	0.0	0.0	0.0	0.0	0.0	0.0	0.0	0.0	0.0	8.63E-04
	T	2.42E-05	2.18E-05	1.37E-05	1.37E-05	1.61E-05	1.25E-05	1.13E-05	1.80E-05	1.64E-05	1.66E-05	8.81E-04
OVARIES	G	9.01E-03	8.43E-06	1.12E-05	1.12E-05	3.56E-05	1.29E-05	7.18E-06	6.09E-06	4.81E-50	3.56E-07	2.23E-05
	B	5.49E 00	0.0	0.0	0.0	0.0	0.0	0.0	0.0	0.0	0.0	8.63E-04
	T	5.50E 00	8.43E-06	1.12E-05	1.12E-05	3.56E-05	1.29E-05	7.18E-06	6.09E-06	4.81E-50	3.56E-07	8.86E-04

39-YTTRIUM-93 CONTINUED

TARGET ORGANS		SOURCE ORGANS										
		OVARIES	PANCREAS	COR BONE	CAN BONE	R MARROW	Y MARROW	SKIN	SPLEEN	TESTES	THYROID	T BODY
PANCREAS	G	7.08E-06	2.48E-03	1.35E-05	1.35E-05	1.75E-05	1.38E-05	7.17E-06	2.19E-04	1.61E-06	2.10E-06	2.65E-05
	B	0.0	6.04E-01	0.0	0.0	0.0	0.0	0.0	0.0	0.0	0.0	8.63E-04
	T	7.08E-06	6.07E-01	1.35E-05	1.35E-05	1.75E-05	1.38E-05	7.17E-06	2.19E-04	1.61E-06	2.10E-06	8.90E-04
SKELETON BONE	G	1.18E-05	1.17E-05	4.19E-05	4.19E-05	2.82E-05	3.11E-05	1.06E-05	9.79E-06	8.49E-06	9.53E-06	1.83E-05
	B	0.0	0.0	1.21E-02	6.90E-03	3.46E-03	0.0	0.0	0.0	0.0	0.0	8.63E-04
	T	1.18E-05	1.17E-05	1.21E-02	6.94E-03	3.48E-03	3.11E-05	1.06E-05	9.79E-06	8.49E-06	9.53E-06	8.82E-04
R MARROW	G	3.85E-05	2.19E-05	3.76E-05	3.76E-05	8.90E-05	3.18E-05	9.92E-06	1.45E-05	6.84E-06	1.05E-05	2.04E-05
	B	0.0	0.0	9.94E-04	1.73E-02	2.88E-02	0.0	0.0	0.0	0.0	0.0	8.63E-04
	T	3.85E-05	2.19E-05	1.03E-03	1.73E-02	2.89E-02	3.18E-05	9.92E-06	1.45E-05	6.84E-06	1.05E-05	8.84E-04
Y MARROW	G	1.55E-05	1.37E-05	3.61E-05	3.61E-05	3.46E-05	5.29E-05	1.12E-05	1.44E-05	3.84E-06	5.23E-06	1.70E-05
	B	0.0	0.0	0.0	0.0	0.0	4.03E-02	0.0	0.0	0.0	0.0	8.63E-04
	T	1.55E-05	1.37E-05	3.61E-05	3.61E-05	3.46E-05	4.03E-02	1.12E-05	1.44E-05	3.84E-06	5.23E-06	8.80E-04
T E CL	G	1.18E-05	1.17E-05	4.19E-05	4.19E-05	3.78E-05	3.43E-05	1.06E-05	9.79E-06	8.49E-06	9.53E-06	1.83E-05
	B	0.0	0.0	7.38E-03	1.03E-02	1.33E-02	1.01E-02	0.0	0.0	0.0	0.0	8.63E-04
	T	1.18E-05	1.17E-05	7.42E-03	1.03E-02	1.33E-02	1.01E-02	1.06E-05	9.79E-06	8.49E-06	9.53E-06	8.82E-04
SKIN	G	6.55E-06	6.64E-06	1.06E-05	1.06E-05	9.48E-06	1.17E-05	2.45E-05	7.51E-06	1.92E-05	1.11E-05	1.13E-05
	B	0.0	0.0	0.0	0.0	0.0	0.0	2.32E-02	0.0	0.0	0.0	8.63E-04
	T	6.55E-06	6.64E-06	1.06E-05	1.06E-05	9.48E-06	1.17E-05	2.33E-02	7.51E-06	1.92E-05	1.11E-05	8.75E-04
SPLEEN	G	8.46E-06	2.22E-04	9.41E-06	9.41E-06	1.26E-05	1.45E-05	8.17E-06	1.53E-03	1.30E-06	2.01E-06	2.03E-05
	B	0.0	0.0	0.0	0.0	0.0	0.0	0.0	3.36E-01	0.0	0.0	8.63E-04
	T	8.46E-06	2.22E-04	9.41E-06	9.41E-06	1.26E-05	1.45E-05	8.17E-06	3.37E-01	1.30E-06	2.01E-06	8.84E-04
TESTES	G	4.81E-50	1.48E-06	1.07E-05	1.07E-05	5.25E-06	1.18E-05	1.22E-05	1.41E-06	4.22E-03	1.01E-07	1.90E-05
	B	0.0	0.0	0.0	0.0	0.0	0.0	0.0	0.0	1.73E 00	0.0	8.63E-04
	T	4.81E-50	1.48E-06	1.07E-05	1.07E-05	5.25E-06	1.18E-05	1.22E-05	1.41E-06	1.73E 00	1.01E-07	8.82E-04
THYMUS	G	9.61E-07	8.39E-06	8.46E-06	8.46E-06	9.85E-06	7.95E-06	9.84E-06	7.07E-06	2.44E-07	5.43E-05	2.19E-05
	B	0.0	0.0	0.0	0.0	0.0	0.0	0.0	0.0	0.0	0.0	8.63E-04
	T	9.61E-07	8.39E-06	8.46E-06	8.46E-06	9.85E-06	7.95E-06	9.84E-06	7.07E-06	2.44E-07	5.43E-05	8.85E-04
THYROID	G	3.56E-07	2.04E-06	7.55E-06	7.55E-06	1.07E-05	1.06E-05	1.02E-05	2.07E-06	1.01E-07	5.66E-03	1.74E-05
	B	0.0	0.0	0.0	0.0	0.0	0.0	0.0	0.0	0.0	3.02E 00	8.63E-04
	T	3.56E-07	2.04E-06	7.55E-06	7.55E-06	1.07E-05	1.06E-05	1.02E-05	2.07E-06	1.01E-07	3.03E 00	8.81E-04
UTERUS	G	2.17E-04	8.04E-06	8.31E-06	8.31E-06	2.08E-05	9.40E-06	7.39E-06	6.32E-06	4.81E-50	3.41E-07	2.60E-05
	B	0.0	0.0	0.0	0.0	0.0	0.0	0.0	0.0	0.0	0.0	8.63E-04
	T	2.17E-04	8.04E-06	8.31E-06	8.31E-06	2.08E-05	9.40E-06	7.39E-06	6.32E-06	4.81E-50	3.41E-07	8.89E-04
T BODY	G	2.43E-05	2.38E-05	1.76E-05	1.76E-05	1.95E-05	1.56E-05	1.13E-05	2.06E-05	1.75E-05	1.59E-05	1.76E-05
	B	8.63E-04	8.63E-04	8.63E-04	8.63E-04	8.63E-04	8.63E-04	8.63E-04	8.63E-04	8.63E-04	8.63E-04	8.63E-04
	T	8.88E-04	8.87E-04	8.81E-04	8.81E-04	8.83E-04	8.79E-04	8.75E-04	8.84E-04	8.81E-04	8.79E-04	8.81E-04

*"MUSCLE" VALUES MAY BE USED FOR "SEPARABLE FAT" WITH ADJUSTMENT (SEE TEXT)
PRINCIPLE REFERENCE-ARAD, B. ET AL., NUCL. PHYS. A131, 137 (1969)
DATE DECAY DATA REVIEWED-JULY 1969

S, AVERAGE DOSE EQUIVALENT PER UNIT ACCUMULATED ACTIVITY (REM/UCI-DAY), FOR 40-ZIRCONIUM-95 (TR=6.500E 01 DAYS)

DATE OF TABLE 11-27-74

TARGET ORGANS		SOURCE ORGANS										
		ADRENALS	BLAD CON	S CONT	SI+CONT	ULI CONT	LLI CONT	KIDNEYS	LIVER	LUNG	RESP LYM NODE	MUSCLE*
ADRENALS	G	5.79E-02	3.06E-05	2.68E-04	1.52E-04	1.42E-04	6.26E-05	1.55E-03	6.08E-04	3.03E-04	3.03E-04	1.92E-04
	B	4.28E-01	0.0	0.0	0.0	0.0	0.0	0.0	0.0	0.0	0.0	0.0
	T	4.86E-01	3.06E-05	2.68E-04	1.52E-04	1.42E-04	6.26E-05	1.55E-03	6.08E-04	3.03E-04	3.03E-04	1.92E-04
BLAD WALL	G	2.29E-05	8.98E-03	6.05E-05	3.50E-04	2.55E-04	6.68E-04	5.43E-05	3.38E-05	1.05E-05	1.05E-05	2.22E-04
	B	0.0	1.50E-02	0.0	0.0	0.0	0.0	0.0	0.0	0.0	0.0	0.0
	T	2.29E-05	2.40E-02	6.05E-05	3.50E-04	2.55E-04	6.68E-04	5.43E-05	3.38E-05	1.05E-05	1.05E-05	2.22E-04
GI TRACT S WALL	G	3.71E-04	5.50E-05	6.46E-03	4.31E-04	4.50E-04	2.11E-04	4.18E-04	2.42E-04	2.37E-04	2.37E-04	1.77E-04
	B	0.0	0.0	1.20E-02	0.0	0.0	0.0	0.0	0.0	0.0	0.0	0.0
	T	3.71E-04	5.50E-05	1.84E-02	4.31E-04	4.50E-04	2.11E-04	4.18E-04	2.42E-04	2.37E-04	2.37E-04	1.77E-04
SI+CONT	G	1.20E-04	3.34E-04	3.23E-04	3.80E-03	2.00E-03	1.11E-03	3.46E-04	1.99E-04	3.82E-05	3.82E-05	1.94E-04
	B	0.0	0.0	0.0	7.48E-03	0.0	0.0	0.0	0.0	0.0	0.0	0.0
	T	1.20E-04	3.34E-04	3.23E-04	1.13E-02	2.00E-03	1.11E-03	3.46E-04	1.99E-04	3.82E-05	3.82E-05	1.94E-04
ULI WALL	G	1.38E-04	2.70E-04	3.93E-04	2.82E-03	5.36E-03	5.08E-04	3.58E-04	3.11E-04	5.06E-05	5.06E-05	2.05E-04
	B	0.0	0.0	0.0	0.0	1.36E-02	0.0	0.0	0.0	0.0	0.0	0.0
	T	1.38E-04	2.70E-04	3.93E-04	2.82E-03	1.90E-02	5.08E-04	3.58E-04	3.11E-04	5.06E-05	5.06E-05	2.05E-04
LLI WALL	G	3.84E-05	8.51E-04	1.66E-04	8.45E-04	3.95E-04	6.36E-03	1.10E-04	3.78E-05	1.10E-05	1.10E-05	2.12E-04
	B	0.0	0.0	0.0	0.0	0.0	2.22E-02	0.0	0.0	0.0	0.0	0.0
	T	3.84E-05	8.51E-04	1.66E-04	8.45E-04	3.95E-04	2.85E-02	1.10E-04	3.78E-05	1.10E-05	1.10E-05	2.12E-04
KIDNEYS	G	1.41E-03	4.69E-05	4.11E-04	3.98E-04	3.51E-04	1.11E-04	8.98E-03	4.65E-04	1.28E-04	1.28E-04	1.81E-04
	B	0.0	0.0	0.0	0.0	0.0	0.0	1.93E-02	0.0	0.0	0.0	0.0
	T	1.41E-03	4.69E-05	4.11E-04	3.98E-04	3.51E-04	1.11E-04	2.83E-02	4.65E-04	1.28E-04	1.28E-04	1.81E-04
LIVER	G	5.98E-04	3.74E-05	2.51E-04	2.31E-04	3.10E-04	4.65E-05	4.88E-04	3.17E-03	2.98E-04	2.98E-04	1.41E-04
	B	0.0	0.0	0.0	0.0	0.0	0.0	0.0	3.33E-03	0.0	0.0	0.0
	T	5.98E-04	3.74E-05	2.51E-04	2.31E-04	3.10E-04	4.65E-05	4.88E-04	6.50E-03	2.98E-04	2.98E-04	1.41E-04
LUNGS	G	2.94E-04	8.34E-06	2.28E-04	4.36E-05	4.78E-05	1.67E-05	1.23E-04	3.02E-04	1.79E-03	1.79E-03	1.68E-04
	B	0.0	0.0	0.0	0.0	0.0	0.0	0.0	0.0	5.99E-03	5.99E-03	0.0
	T	2.94E-04	8.34E-06	2.28E-04	4.36E-05	4.78E-05	1.67E-05	1.23E-04	3.02E-04	7.78E-03	7.78E-03	1.68E-04
RESP LYM NODE	G	2.94E-04	8.34E-06	2.28E-04	4.36E-05	4.78E-05	1.67E-05	1.23E-04	3.02E-04	1.79E-03	1.79E-03	1.68E-04
	B	0.0	0.0	0.0	0.0	0.0	0.0	0.0	0.0	5.99E-03	3.99E-01	0.0
	T	2.94E-04	8.34E-06	2.28E-04	4.36E-05	4.78E-05	1.67E-05	1.23E-04	3.02E-04	7.78E-03	4.01E-01	1.68E-04
MUSCLE*	G	1.92E-04	2.22E-04	1.77E-04	1.94E-04	1.86E-04	2.12E-04	1.81E-04	1.41E-04	1.68E-04	1.68E-04	1.91E-04
	B	0.0	0.0	0.0	0.0	0.0	0.0	0.0	0.0	0.0	0.0	2.14E-04
	T	1.92E-04	2.22E-04	1.77E-04	1.94E-04	1.86E-04	2.12E-04	1.81E-04	1.41E-04	1.68E-04	1.68E-04	4.05E-04
OVARIES	G	6.92E-05	6.64E-04	1.25E-04	1.19E-03	1.27E-03	2.05E-03	1.75E-04	5.79E-05	2.06E-05	2.06E-05	2.48E-04
	B	0.0	0.0	0.0	0.0	0.0	0.0	0.0	0.0	0.0	0.0	0.0
	T	6.92E-05	6.64E-04	1.25E-04	1.19E-03	1.27E-03	2.05E-03	1.75E-04	5.79E-05	2.06E-05	2.06E-05	2.48E-04

40-ZIRCONIUM-95 CONTINUED

TARGET ORGANS		SOURCE ORGANS										
		ADRENALS	BLAD CON	S CONT	SI+CONT	ULI CONT	LLI CONT	KIDNEYS	LIVER	LUNG	RESP LYM NODE	MUSCLE*
PANCREAS	G	1.07E-03	3.54E-05	2.11E-03	2.57E-04	2.42E-04	9.39E-05	8.42E-04	5.66E-04	3.15E-04	3.15E-04	2.24E-04
	B	0.0	0.0	0.0	0.0	0.0	0.0	0.0	0.0	0.0	0.0	0.0
	T	1.07E-03	3.54E-05	2.11E-03	2.57E-04	2.42E-04	9.39E-05	8.42E-04	5.66E-04	3.15E-04	3.15E-04	2.24E-04
SKELETON BONE	G	1.70E-04	7.15E-05	7.45E-05	9.80E-05	8.83E-05	1.28E-04	1.22E-04	9.06E-05	1.24E-04	1.24E-04	1.40E-04
	B	0.0	0.0	0.0	0.0	0.0	0.0	0.0	0.0	0.0	0.0	0.0
	T	1.70E-04	7.15E-05	7.45E-05	9.80E-05	8.83E-05	1.28E-04	1.22E-04	9.06E-05	1.24E-04	1.24E-04	1.40E-04
R MARROW	G	3.03E-04	1.51E-04	1.27E-04	3.07E-04	2.60E-04	3.83E-04	3.07E-04	1.30E-04	1.57E-04	1.57E-04	1.69E-04
	B	0.0	0.0	0.0	0.0	0.0	0.0	0.0	0.0	0.0	0.0	0.0
	T	3.03E-04	1.51E-04	1.27E-04	3.07E-04	2.60E-04	3.83E-04	3.07E-04	1.30E-04	1.57E-04	1.57E-04	1.69E-04
Y MARROW	G	1.65E-04	6.58E-05	1.03E-04	1.35E-04	1.25E-04	1.58E-04	1.51E-04	1.34E-04	1.31E-04	1.31E-04	1.38E-04
	B	0.0	0.0	0.0	0.0	0.0	0.0	0.0	0.0	0.0	0.0	0.0
	T	1.65E-04	6.58E-05	1.03E-04	1.35E-04	1.25E-04	1.58E-04	1.51E-04	1.34E-04	1.31E-04	1.31E-04	1.38E-04
T E CL	G	1.70E-04	7.15E-05	7.45E-05	9.80E-05	8.83E-05	1.28E-04	1.22E-04	9.06E-05	1.24E-04	1.24E-04	1.40E-04
	B	0.0	0.0	0.0	0.0	0.0	0.0	0.0	0.0	0.0	0.0	0.0
	T	1.70E-04	7.15E-05	7.45E-05	9.80E-05	8.83E-05	1.28E-04	1.22E-04	9.06E-05	1.24E-04	1.24E-04	1.40E-04
SKIN	G	8.96E-05	8.59E-05	7.71E-05	7.05E-05	7.10E-05	7.64E-05	8.49E-05	7.79E-05	8.71E-05	8.71E-05	1.18E-04
	B	0.0	0.0	0.0	0.0	0.0	0.0	0.0	0.0	0.0	0.0	0.0
	T	8.96E-05	8.59E-05	7.71E-05	7.05E-05	7.10E-05	7.64E-05	8.49E-05	7.79E-05	8.71E-05	8.71E-05	1.18E-04
SPLEEN	G	7.83E-04	3.07E-05	1.18E-03	1.96E-04	1.64E-04	1.27E-04	1.04E-03	1.36E-04	2.72E-04	2.72E-04	1.85E-04
	B	0.0	0.0	0.0	0.0	0.0	0.0	0.0	0.0	0.0	0.0	0.0
	T	7.83E-04	3.07E-05	1.18E-03	1.96E-04	1.64E-04	1.27E-04	1.04E-03	1.36E-04	2.72E-04	2.72E-04	1.85E-04
TESTES	G	1.02E-05	6.24E-04	1.20E-05	5.66E-05	6.91E-05	2.26E-04	2.05E-05	2.35E-05	3.84E-06	3.84E-06	1.57E-04
	B	0.0	0.0	0.0	0.0	0.0	0.0	0.0	0.0	0.0	0.0	0.0
	T	1.02E-05	6.24E-04	1.20E-05	5.66E-05	6.91E-05	2.26E-04	2.05E-05	2.35E-05	3.84E-06	3.84E-06	1.57E-04
THYMUS	G	1.00E-04	4.92E-06	6.73E-05	1.91E-05	2.07E-05	8.45E-06	3.21E-05	1.36E-04	4.91E-04	4.91E-04	1.90E-04
	B	0.0	0.0	0.0	0.0	0.0	0.0	0.0	0.0	0.0	0.0	0.0
	T	1.00E-04	4.92E-06	6.73E-05	1.91E-05	2.07E-05	8.45E-06	3.21E-05	1.36E-04	4.91E-04	4.91E-04	1.90E-04
THYROID	G	2.65E-05	1.66E-06	2.07E-05	6.02E-06	6.40E-06	2.91E-06	1.33E-05	2.46E-05	1.65E-04	1.65E-04	1.73E-04
	B	0.0	0.0	0.0	0.0	0.0	0.0	0.0	0.0	0.0	0.0	0.0
	T	2.65E-05	1.66E-06	2.07E-05	6.02E-06	6.40E-06	2.91E-06	1.33E-05	2.46E-05	1.65E-04	1.65E-04	1.73E-04
UTERUS	G	5.60E-05	1.84E-03	1.18E-04	1.07E-03	5.74E-04	6.95E-04	1.06E-04	5.26E-05	1.37E-05	1.37E-05	2.87E-04
	B	0.0	0.0	0.0	0.0	0.0	0.0	0.0	0.0	0.0	0.0	0.0
	T	5.60E-05	1.84E-03	1.18E-04	1.07E-03	5.74E-04	6.95E-04	1.06E-04	5.26E-05	1.37E-05	1.37E-05	2.87E-04
T BODY	G	2.11E-04	2.33E-04	2.22E-04	2.44E-04	2.39E-04	2.37E-04	2.12E-04	2.13E-04	1.81E-04	1.81E-04	1.82E-04
	B	8.55E-05	9.62E-06	2.57E-05	6.84E-05	4.08E-05	5.07E-05	8.55E-05	8.55E-05	8.55E-05	8.55E-05	8.55E-05
	T	2.96E-04	2.43E-04	2.48E-04	3.12E-04	2.80E-04	2.87E-04	2.98E-04	2.98E-04	2.67E-04	2.67E-04	2.68E-04

CONTINUED NEXT PAGE

40-ZIRCONIUM-95 CONTINUED

TARGET ORGANS		SOURCE ORGANS										
		OVARIES	PANCREAS	COR BONE	CAN BONE	R MARROW	Y MARROW	SKIN	SPLEEN	TESTES	THYROID	T BODY
ADRENALS	G	7.43E-05	9.49E-04	2.25E-04	2.25E-04	2.96E-04	1.01E-04	9.43E-05	8.27E-04	1.02E-05	2.65E-05	2.57E-04
	B	0.0	0.0	0.0	0.0	0.0	0.0	0.0	0.0	0.0	0.0	8.55E-05
	T	7.43E-05	9.49E-04	2.25E-04	2.25E-04	2.96E-04	1.01E-04	9.43E-05	8.27E-04	1.02E-05	2.65E-05	3.43E-04
BLAD WALL	G	8.57E-04	2.05E-05	6.90E-05	6.90E-05	1.14E-04	3.63E-05	8.98E-05	3.15E-05	6.53E-04	1.67E-06	2.44E-04
	B	0.0	0.0	0.0	0.0	0.0	0.0	0.0	0.0	0.0	0.0	8.55E-05
	T	8.57E-04	2.05E-05	6.90E-05	6.90E-05	1.14E-04	3.63E-05	8.98E-05	3.15E-05	6.53E-04	1.67E-06	3.29E-04
GI TRACT S WALL	G	1.01E-04	2.11E-03	7.11E-05	7.11E-05	1.38E-04	9.53E-05	8.37E-05	1.19E-03	1.28E-05	1.70E-05	2.18E-04
	B	0.0	0.0	0.0	0.0	0.0	0.0	0.0	0.0	0.0	0.0	8.55E-05
	T	1.01E-04	2.11E-03	7.11E-05	7.11E-05	1.38E-04	9.53E-05	8.37E-05	1.19E-03	1.28E-05	1.70E-05	3.04E-04
SI+CONT	G	1.43E-03	2.24E-04	1.04E-04	1.04E-04	3.32E-04	1.31E-04	7.33E-05	1.75E-04	6.81E-05	2.98E-06	2.46E-04
	B	0.0	0.0	0.0	0.0	0.0	0.0	0.0	0.0	0.0	0.0	8.55E-05
	T	1.43E-03	2.24E-04	1.04E-04	1.04E-04	3.32E-04	1.31E-04	7.33E-05	1.75E-04	6.81E-05	2.98E-06	3.32E-04
ULI WALL	G	1.35E-03	2.74E-04	9.39E-05	9.39E-05	2.48E-04	1.08E-04	7.95E-05	1.76E-04	4.67E-05	3.46E-06	2.40E-04
	B	0.0	0.0	0.0	0.0	0.0	0.0	0.0	0.0	0.0	0.0	8.55E-05
	T	1.35E-03	2.74E-04	9.39E-05	9.39E-05	2.48E-04	1.08E-04	7.95E-05	1.76E-04	4.67E-05	3.46E-06	3.25E-04
LLI WALL	G	1.72E-03	6.92E-05	1.28E-04	1.28E-04	3.80E-04	1.03E-04	8.10E-05	8.40E-05	3.21E-04	2.48E-06	2.48E-04
	B	0.0	0.0	0.0	0.0	0.0	0.0	0.0	0.0	0.0	0.0	8.55E-05
	T	1.72E-03	6.92E-05	1.28E-04	1.28E-04	3.80E-04	1.03E-04	8.10E-05	8.40E-05	3.21E-04	2.48E-06	3.33E-04
KIDNEYS	G	1.42E-04	7.65E-04	1.33E-04	1.33E-04	2.98E-04	1.51E-04	9.72E-05	1.04E-03	1.60E-05	1.08E-05	2.25E-04
	B	0.0	0.0	0.0	0.0	0.0	0.0	0.0	0.0	0.0	0.0	8.55E-05
	T	1.42E-04	7.65E-04	1.33E-04	1.33E-04	2.98E-04	1.51E-04	9.72E-05	1.04E-03	1.60E-05	1.08E-05	3.10E-04
LIVER	G	8.02E-05	5.07E-04	9.08E-05	9.08E-05	1.27E-04	1.39E-04	8.60E-05	1.36E-04	9.99E-06	2.25E-05	2.23E-04
	B	0.0	0.0	0.0	0.0	0.0	0.0	0.0	0.0	0.0	0.0	8.55E-05
	T	8.02E-05	5.07E-04	9.08E-05	9.08E-05	1.27E-04	1.39E-04	8.60E-05	1.36E-04	9.99E-06	2.25E-05	3.09E-04
LUNGS	G	1.73E-05	2.94E-04	1.25E-04	1.25E-04	1.52E-04	1.28E-04	8.83E-05	2.71E-04	2.79E-06	1.40E-04	1.87E-04
	B	0.0	0.0	0.0	0.0	0.0	0.0	0.0	0.0	0.0	0.0	8.55E-05
	T	1.73E-05	2.94E-04	1.25E-04	1.25E-04	1.52E-04	1.28E-04	8.83E-05	2.71E-04	2.79E-06	1.40E-04	2.72E-04
RESP LYM NODE	G	1.73E-05	2.94E-04	1.25E-04	1.25E-04	1.52E-04	1.28E-04	8.83E-05	2.71E-04	2.79E-06	1.40E-04	1.87E-04
	B	0.0	0.0	0.0	0.0	0.0	0.0	0.0	0.0	0.0	0.0	8.55E-05
	T	1.73E-05	2.94E-04	1.25E-04	1.25E-04	1.52E-04	1.28E-04	8.83E-05	2.71E-04	2.79E-06	1.40E-04	2.72E-04
MUSCLE*	G	2.48E-04	2.24E-04	1.40E-04	1.40E-04	1.65E-04	1.30E-04	1.18E-04	1.85E-04	1.57E-04	1.73E-04	1.82E-04
	B	0.0	0.0	0.0	0.0	0.0	0.0	0.0	0.0	0.0	0.0	8.55E-05
	T	2.48E-04	2.24E-04	1.40E-04	1.40E-04	1.65E-04	1.30E-04	1.18E-04	1.85E-04	1.57E-04	1.73E-04	2.68E-04
OVARIES	G	9.45E-02	8.85E-05	1.30E-04	1.30E-04	3.94E-04	1.12E-04	5.82E-05	1.02E-04	7.15E-50	2.95E-06	1.89E-04
	B	5.44E-01	0.0	0.0	0.0	0.0	0.0	0.0	0.0	0.0	0.0	8.55E-05
	T	6.39E-01	8.85E-05	1.30E-04	1.30E-04	3.94E-04	1.12E-04	5.82E-05	1.02E-04	7.15E-50	2.95E-06	2.74E-04

40-ZIRCONIUM-95 CONTINUED

TARGET ORGANS		SOURCE ORGANS										
		OVARIES	PANCREAS	COR BONE	CAN BONE	R MARROW	Y MARROW	SKIN	SPLEEN	TESTES	THYROID	T BODY
PANCREAS	G	9.45E-05	2.63E-02	1.20E-04	1.20E-04	1.81E-04	1.47E-04	6.86E-05	2.35E-03	9.04E-06	7.93E-06	2.11E-04
	B	0.0	5.99E-02	0.0	0.0	0.0	0.0	0.0	0.0	0.0	0.0	8.55E-05
	T	9.45E-05	8.62E-02	1.20E-04	1.20E-04	1.81E-04	1.47E-04	6.86E-05	2.35E-03	9.04E-06	7.93E-06	2.97E-04
SKELETON BONE	G	1.14E-04	1.13E-04	4.32E-04	4.32E-04	2.88E-04	3.21E-04	1.08E-04	9.62E-05	8.31E-05	9.38E-05	1.85E-04
	B	0.0	0.0	1.20E-03	9.22E-04	1.84E-04	0.0	0.0	0.0	0.0	0.0	8.55E-05
	T	1.14E-04	1.13E-04	1.63E-03	1.35E-03	4.72E-04	3.21E-04	1.08E-04	9.62E-05	8.31E-05	9.38E-05	2.70E-04
R MARROW	G	3.74E-04	2.12E-04	3.88E-04	3.88E-04	9.16E-04	3.32E-04	1.00E-04	1.41E-04	6.58E-05	1.02E-04	2.04E-04
	B	0.0	0.0	1.08E-05	9.20E-04	3.38E-03	0.0	0.0	0.0	0.0	0.0	8.55E-05
	T	3.74E-04	2.12E-04	3.99E-04	1.31E-03	4.29E-03	3.32E-04	1.00E-04	1.41E-04	6.58E-05	1.02E-04	2.89E-04
Y MARROW	G	1.51E-04	1.33E-04	3.73E-04	3.73E-04	3.55E-04	5.44E-04	1.15E-04	1.44E-04	3.60E-05	5.02E-05	1.73E-04
	B	0.0	0.0	0.0	0.0	0.0	3.99E-03	0.0	0.0	0.0	0.0	8.55E-05
	T	1.51E-04	1.33E-04	3.73E-04	3.73E-04	3.55E-04	4.54E-03	1.15E-04	1.44E-04	3.60E-05	5.02E-05	2.59E-04
T E CL	G	1.14E-04	1.13E-04	4.32E-04	4.32E-04	3.87E-04	3.54E-04	1.08E-04	9.62E-05	8.31E-05	9.38E-05	1.85E-04
	B	0.0	0.0	6.94E-04	1.39E-03	1.07E-03	9.98E-04	0.0	0.0	0.0	0.0	8.55E-05
	T	1.14E-04	1.13E-04	1.13E-03	1.82E-03	1.46E-03	1.35E-03	1.08E-04	9.62E-05	8.31E-05	9.38E-05	2.70E-04
SKIN	G	6.96E-05	6.82E-05	1.10E-04	1.10E-04	9.53E-05	1.23E-04	2.60E-04	8.15E-05	2.00E-04	1.13E-04	1.17E-04
	B	0.0	0.0	0.0	0.0	0.0	0.0	2.30E-03	0.0	0.0	0.0	8.55E-05
	T	6.96E-05	6.82E-05	1.10E-04	1.10E-04	9.53E-05	1.23E-04	2.56E-03	8.15E-05	2.00E-04	1.13E-04	2.02E-04
SPLEEN	G	8.36E-05	2.32E-03	1.10E-04	1.10E-04	1.18E-04	1.33E-04	9.25E-05	1.61E-02	1.26E-05	2.16E-05	2.23E-04
	B	0.0	0.0	0.0	0.0	0.0	0.0	0.0	3.33E-02	0.0	0.0	8.55E-05
	T	8.36E-05	2.32E-03	1.10E-04	1.10E-04	1.18E-04	1.33E-04	9.25E-05	4.94E-02	1.26E-05	2.16E-05	3.09E-04
TESTES	G	7.15E-50	1.19E-05	7.89E-05	7.89E-05	5.53E-05	1.19E-04	1.12E-04	1.34E-05	4.48E-02	6.73E-07	2.29E-04
	B	0.0	0.0	0.0	0.0	0.0	0.0	0.0	0.0	1.71E-01	0.0	8.55E-05
	T	7.15E-50	1.19E-05	7.89E-05	7.89E-05	5.53E-05	1.19E-04	1.12E-04	1.34E-05	2.16E-01	6.73E-07	3.15E-04
THYMUS	G	8.90E-06	6.72E-05	1.03E-04	1.03E-04	7.07E-05	5.00E-05	1.02E-04	7.58E-05	1.91E-06	5.17E-04	1.75E-04
	B	0.0	0.0	0.0	0.0	0.0	0.0	0.0	0.0	0.0	0.0	8.55E-05
	T	8.90E-06	6.72E-05	1.03E-04	1.03E-04	7.07E-05	5.00E-05	1.02E-04	7.58E-05	1.91E-06	5.17E-04	2.61E-04
THYROID	G	2.95E-06	1.42E-05	1.04E-04	1.04E-04	1.18E-04	6.08E-05	9.93E-05	2.02E-05	6.73E-07	6.01E-02	1.91E-04
	B	0.0	0.0	0.0	0.0	0.0	0.0	0.0	0.0	0.0	2.99E-01	8.55E-05
	T	2.95E-06	1.42E-05	1.04E-04	1.04E-04	1.18E-04	6.08E-05	9.93E-05	2.02E-05	6.73E-07	3.59E-01	2.76E-04
UTERUS	G	2.16E-03	7.83E-05	9.54E-05	9.54E-05	2.21E-04	8.55E-05	8.47E-05	6.93E-05	7.15E-50	2.81E-06	2.61E-04
	B	0.0	0.0	0.0	0.0	0.0	0.0	0.0	0.0	0.0	0.0	8.55E-05
	T	2.16E-03	7.83E-05	9.54E-05	9.54E-05	2.21E-04	8.55E-05	8.47E-05	6.93E-05	7.15E-50	2.81E-06	3.47E-04
T BODY	G	2.49E-04	2.43E-04	1.81E-04	1.81E-04	2.00E-04	1.62E-04	1.18E-04	2.12E-04	1.80E-04	1.64E-04	1.82E-04
	B	8.55E-05	8.55E-05	8.55E-05	8.55E-05	8.55E-05	8.55E-05	8.55E-05	8.55E-05	8.55E-05	8.55E-05	8.55E-05
	T	3.34E-04	3.29E-04	2.66E-04	2.66E-04	2.86E-04	2.47E-04	2.04E-04	2.97E-04	2.66E-04	2.50E-04	2.67E-04

*"MUSCLE" VALUES MAY BE USED FOR "SEPARABLE FAT" WITH ADJUSTMENT (SEE TEXT)
PRINCIPLE REFERENCE-FOIN, C. AND OMS, J., NUCL. PHYS. A123, 513 (1969)
DATE DECAY DATA REVIEWED-JULY 1969

S, AVERAGE DOSE EQUIVALENT PER UNIT ACCUMULATED ACTIVITY (REM/UCI-DAY), FOR 40-ZIRCONIUM-97 (TR=1.700E 01 HOURS)

DATE OF TABLE 11-27-74

TARGET ORGANS		SOURCE ORGANS										
		ADRENALS	BLAD CON	S CONT	SI+CONT	ULI CONT	LLI CONT	KIDNEYS	LIVER	LUNG	RESP LYM NODE	MUSCLE*
ADRENALS	G	6.81E-02	3.63E-05	3.28E-04	1.80E-04	1.67E-04	7.37E-05	1.82E-03	7.14E-04	3.49E-04	3.49E-04	2.26E-04
	B	2.63E 00	0.0	0.0	0.0	0.0	0.0	0.0	0.0	0.0	0.0	0.0
	T	2.69E 00	3.63E-05	3.28E-04	1.80E-04	1.67E-04	7.37E-05	1.82E-03	7.14E-04	3.49E-04	3.49E-04	2.26E-04
BLAD WALL	G	2.79E-05	1.05E-02	7.04E-05	4.15E-04	2.98E-04	7.96E-04	6.39E-05	3.96E-05	1.26E-05	1.26E-05	2.61E-04
	B	0.0	9.19E-02	0.0	0.0	0.0	0.0	0.0	0.0	0.0	0.0	0.0
	T	2.79E-05	1.02E-01	7.04E-05	4.15E-04	2.98E-04	7.96E-04	6.39E-05	3.96E-05	1.26E-05	1.26E-05	2.61E-04
GI TRACT S WALL	G	4.33E-04	6.51E-05	7.56E-03	5.08E-04	5.26E-04	2.47E-04	4.87E-04	2.86E-04	2.81E-04	2.81E-04	2.08E-04
	B	0.0	0.0	7.35E-02	0.0	0.0	0.0	0.0	0.0	0.0	0.0	0.0
	T	4.33E-04	6.51E-05	8.11E-02	5.08E-04	5.26E-04	2.47E-04	4.87E-04	2.86E-04	2.81E-04	2.81E-04	2.08E-04
SI+CONT	G	1.43E-04	3.93E-04	3.79E-04	4.46E-03	2.34E-03	1.30E-03	4.08E-04	2.34E-04	4.52E-05	4.52E-05	2.28E-04
	B	0.0	0.0	0.0	4.60E-02	0.0	0.0	0.0	0.0	0.0	0.0	0.0
	T	1.43E-04	3.93E-04	3.79E-04	5.04E-02	2.34E-03	1.30E-03	4.08E-04	2.34E-04	4.52E-05	4.52E-05	2.28E-04
ULI WALL	G	1.61E-04	3.16E-04	4.67E-04	3.31E-03	6.29E-03	5.99E-04	4.21E-04	3.62E-04	5.99E-05	5.99E-05	2.41E-04
	B	0.0	0.0	0.0	0.0	8.36E-02	0.0	0.0	0.0	0.0	0.0	0.0
	T	1.61E-04	3.16E-04	4.67E-04	3.31E-03	8.99E-02	5.99E-04	4.21E-04	3.62E-04	5.99E-05	5.99E-05	2.41E-04
LLI WALL	G	4.62E-05	1.00E-03	1.97E-04	9.95E-04	4.61E-04	7.47E-03	1.31E-04	4.51E-05	1.29E-05	1.29E-05	2.49E-04
	B	0.0	0.0	0.0	0.0	0.0	1.36E-01	0.0	0.0	0.0	0.0	0.0
	T	4.62E-05	1.00E-03	1.97E-04	9.95E-04	4.61E-04	1.44E-01	1.31E-04	4.51E-05	1.29E-05	1.29E-05	2.49E-04
KIDNEYS	G	1.65E-03	5.64E-05	4.82E-04	4.64E-04	4.12E-04	1.32E-04	1.05E-02	5.47E-04	1.51E-04	1.51E-04	2.13E-04
	B	0.0	0.0	0.0	0.0	0.0	0.0	1.19E-01	0.0	0.0	0.0	0.0
	T	1.65E-03	5.64E-05	4.82E-04	4.64E-04	4.12E-04	1.32E-04	1.29E-01	5.47E-04	1.51E-04	1.51E-04	2.13E-04
LIVER	G	7.03E-04	4.42E-05	2.95E-04	2.71E-04	3.65E-04	5.56E-05	5.72E-04	3.72E-03	3.50E-04	3.50E-04	1.66E-04
	B	0.0	0.0	0.0	0.0	0.0	0.0	0.0	2.04E-02	0.0	0.0	0.0
	T	7.03E-04	4.42E-05	2.95E-04	2.71E-04	3.65E-04	5.56E-05	5.72E-04	2.42E-02	3.50E-04	3.50E-04	1.66E-04
LUNGS	G	3.47E-04	1.01E-05	2.67E-04	5.13E-05	5.68E-05	2.03E-05	1.45E-04	3.56E-04	2.11E-03	2.11E-03	1.97E-04
	B	0.0	0.0	0.0	0.0	0.0	0.0	0.0	0.0	3.68E-02	3.68E-02	0.0
	T	3.47E-04	1.01E-05	2.67E-04	5.13E-05	5.68E-05	2.03E-05	1.45E-04	3.56E-04	3.89E-02	3.89E-02	1.97E-04
RESP LYM NODE	G	3.47E-04	1.01E-05	2.67E-04	5.13E-05	5.68E-05	2.03E-05	1.45E-04	3.56E-04	2.11E-03	2.11E-03	1.97E-04
	B	0.0	0.0	0.0	0.0	0.0	0.0	0.0	0.0	3.68E-02	2.45E 00	0.0
	T	3.47E-04	1.01E-05	2.67E-04	5.13E-05	5.68E-05	2.03E-05	1.45E-04	3.56E-04	3.89E-02	2.45E 00	1.97E-04
MUSCLE*	G	2.26E-04	2.61E-04	2.08E-04	2.28E-04	2.18E-04	2.49E-04	2.13E-04	1.66E-04	1.97E-04	1.97E-04	2.25E-04
	B	0.0	0.0	0.0	0.0	0.0	0.0	0.0	0.0	0.0	0.0	1.31E-03
	T	2.26E-04	2.61E-04	2.08E-04	2.28E-04	2.18E-04	2.49E-04	2.13E-04	1.66E-04	1.97E-04	1.97E-04	1.54E-03
OVARIES	G	7.83E-05	7.99E-04	1.47E-04	1.39E-03	1.46E-03	2.41E-03	2.05E-04	7.40E-05	2.45E-05	2.45E-05	2.92E-04
	B	0.0	0.0	0.0	0.0	0.0	0.0	0.0	0.0	0.0	0.0	0.0
	T	7.83E-05	7.99E-04	1.47E-04	1.39E-03	1.46E-03	2.41E-03	2.05E-04	7.40E-05	2.45E-05	2.45E-05	2.92E-04

40-ZIRCONIUM-97 CONTINUED

TARGET ORGANS		SOURCE ORGANS										
		ADRENALS	BLAD CON	S CONT	SI+CONT	ULI CONT	LLI CONT	KIDNEYS	LIVER	LUNG	RESP LYM NODE	MUSCLE*
PANCREAS	G	1.26E-03	4.21E-05	2.48E-03	3.00E-04	2.88E-04	1.10E-04	9.83E-04	6.57E-04	3.68E-04	3.68E-04	2.63E-04
	B	0.0	0.0	0.0	0.0	0.0	0.0	0.0	0.0	0.0	0.0	0.0
	T	1.26E-03	4.21E-05	2.48E-03	3.00E-04	2.88E-04	1.10E-04	9.83E-04	6.57E-04	3.68E-04	3.68E-04	2.63E-04
SKELETON BONE	G	2.00E-04	8.42E-05	8.77E-05	1.15E-04	1.04E-04	1.51E-04	1.43E-04	1.07E-04	1.46E-04	1.46E-04	1.65E-04
	B	0.0	0.0	0.0	0.0	0.0	0.0	0.0	0.0	0.0	0.0	0.0
	T	2.00E-04	8.42E-05	8.77E-05	1.15E-04	1.04E-04	1.51E-04	1.43E-04	1.07E-04	1.46E-04	1.46E-04	1.65E-04
R MARROW	G	3.56E-04	1.78E-04	1.50E-04	3.61E-04	3.06E-04	4.49E-04	3.61E-04	1.54E-04	1.84E-04	1.84E-04	1.98E-04
	B	0.0	0.0	0.0	0.0	0.0	0.0	0.0	0.0	0.0	0.0	0.0
	T	3.56E-04	1.78E-04	1.50E-04	3.61E-04	3.06E-04	4.49E-04	3.61E-04	1.54E-04	1.84E-04	1.84E-04	1.98E-04
Y MARROW	G	1.94E-04	7.76E-05	1.22E-04	1.59E-04	1.47E-04	1.86E-04	1.78E-04	1.58E-04	1.54E-04	1.54E-04	1.62E-04
	B	0.0	0.0	0.0	0.0	0.0	0.0	0.0	0.0	0.0	0.0	0.0
	T	1.94E-04	7.76E-05	1.22E-04	1.59E-04	1.47E-04	1.86E-04	1.78E-04	1.58E-04	1.54E-04	1.54E-04	1.62E-04
T E CL	G	2.00E-04	8.42E-05	8.77E-05	1.15E-04	1.04E-04	1.51E-04	1.43E-04	1.07E-04	1.46E-04	1.46E-04	1.65E-04
	B	0.0	0.0	0.0	0.0	0.0	0.0	0.0	0.0	0.0	0.0	0.0
	T	2.00E-04	8.42E-05	8.77E-05	1.15E-04	1.04E-04	1.51E-04	1.43E-04	1.07E-04	1.46E-04	1.46E-04	1.65E-04
SKIN	G	1.06E-04	1.01E-04	9.09E-05	8.34E-05	8.37E-05	9.08E-05	9.99E-05	9.21E-05	1.03E-04	1.03E-04	1.39E-04
	B	0.0	0.0	0.0	0.0	0.0	0.0	0.0	0.0	0.0	0.0	0.0
	T	1.06E-04	1.01E-04	9.09E-05	8.34E-05	8.37E-05	9.08E-05	9.99E-05	9.21E-05	1.03E-04	1.03E-04	1.39E-04
SPLEEN	G	9.14E-04	3.61E-05	1.39E-03	2.32E-04	1.95E-04	1.49E-04	1.22E-03	1.59E-04	3.17E-04	3.17E-04	2.17E-04
	B	0.0	0.0	0.0	0.0	0.0	0.0	0.0	0.0	0.0	0.0	0.0
	T	9.14E-04	3.61E-05	1.39E-03	2.32E-04	1.95E-04	1.49E-04	1.22E-03	1.59E-04	3.17E-04	3.17E-04	2.17E-04
TESTES	G	1.22E-05	7.26E-04	1.51E-05	6.85E-05	8.02E-05	2.65E-04	2.44E-05	2.73E-05	4.67E-06	4.67E-06	1.85E-04
	B	0.0	0.0	0.0	0.0	0.0	0.0	0.0	0.0	0.0	0.0	0.0
	T	1.22E-05	7.26E-04	1.51E-05	6.85E-05	8.02E-05	2.65E-04	2.44E-05	2.73E-05	4.67E-06	4.67E-06	1.85E-04
THYMUS	G	1.16E-04	5.97E-06	8.07E-05	2.27E-05	2.46E-05	1.01E-05	3.79E-05	1.55E-04	5.82E-04	5.82E-04	2.33E-04
	B	0.0	0.0	0.0	0.0	0.0	0.0	0.0	0.0	0.0	0.0	0.0
	T	1.16E-04	5.97E-06	8.07E-05	2.27E-05	2.46E-05	1.01E-05	3.79E-05	1.55E-04	5.82E-04	5.82E-04	2.33E-04
THYROID	G	3.17E-05	2.07E-06	2.46E-05	7.28E-06	7.73E-06	3.56E-06	1.59E-05	2.93E-05	1.90E-04	1.90E-04	2.03E-04
	B	0.0	0.0	0.0	0.0	0.0	0.0	0.0	0.0	0.0	0.0	0.0
	T	3.17E-05	2.07E-06	2.46E-05	7.28E-06	7.73E-06	3.56E-06	1.59E-05	2.93E-05	1.90E-04	1.90E-04	2.03E-04
UTERUS	G	6.86E-05	2.15E-03	1.39E-04	1.25E-03	6.79E-04	8.20E-04	1.27E-04	6.40E-05	1.77E-05	1.77E-05	3.35E-04
	B	0.0	0.0	0.0	0.0	0.0	0.0	0.0	0.0	0.0	0.0	0.0
	T	6.86E-05	2.15E-03	1.39E-04	1.25E-03	6.79E-04	8.20E-04	1.27E-04	6.40E-05	1.77E-05	1.77E-05	3.35E-04
T BODY	G	2.48E-04	2.74E-04	2.61E-04	2.87E-04	2.81E-04	2.78E-04	2.50E-04	2.50E-04	2.13E-04	2.13E-04	2.14E-04
	B	5.25E-04	5.91E-05	1.58E-04	4.20E-04	2.51E-04	3.11E-04	5.25E-04	5.25E-04	5.25E-04	5.25E-04	5.25E-04
	T	7.73E-04	3.33E-04	4.19E-04	7.07E-04	5.31E-04	5.90E-04	7.75E-04	7.75E-04	7.38E-04	7.38E-04	7.39E-04

CONTINUED NEXT PAGE

40-ZIRCONIUM-97 CONTINUED

TARGET ORGANS		SOURCE ORGANS										
		OVARIES	PANCREAS	COR BONE	CAN BONE	R MARROW	Y MARROW	SKIN	SPLEEN	TESTES	THYROID	T BODY
ADRENALS	G	8.67E-05	1.11E-03	2.65E-04	2.65E-04	3.46E-04	1.24E-04	1.13E-04	9.71E-04	1.22E-05	3.15E-05	3.09E-04
	B	0.0	0.0	0.0	0.0	0.0	0.0	0.0	0.0	0.0	0.0	5.25E-04
	T	8.67E-05	1.11E-03	2.65E-04	2.65E-04	3.46E-04	1.24E-04	1.13E-04	9.71E-04	1.22E-05	3.15E-05	8.34E-04
BLAD WALL	G	1.00E-03	2.62E-05	8.30E-05	8.30E-05	1.35E-04	4.45E-05	1.07E-04	3.76E-05	7.61E-04	2.08E-06	2.85E-04
	B	0.0	0.0	0.0	0.0	0.0	0.0	0.0	0.0	0.0	0.0	5.25E-04
	T	1.00E-03	2.62E-05	8.30E-05	8.30E-05	1.35E-04	4.45E-05	1.07E-04	3.76E-05	7.61E-04	2.08E-06	8.10E-04
GI TRACT S WALL	G	1.21E-04	2.47E-03	8.40E-05	8.40E-05	1.62E-04	1.12E-04	9.83E-05	1.40E-03	1.53E-05	2.03E-05	2.54E-04
	B	0.0	0.0	0.0	0.0	0.0	0.0	0.0	0.0	0.0	0.0	5.25E-04
	T	1.21E-04	2.47E-03	8.40E-05	8.40E-05	1.62E-04	1.12E-04	9.83E-05	1.40E-03	1.53E-05	2.03E-05	7.79E-04
SI+CONT	G	1.68E-03	2.64E-04	1.22E-04	1.22E-04	3.88E-04	1.54E-04	8.64E-05	2.07E-04	8.04E-05	3.91E-06	2.89E-04
	B	0.0	0.0	0.0	0.0	0.0	0.0	0.0	0.0	0.0	0.0	5.25E-04
	T	1.68E-03	2.64E-04	1.22E-04	1.22E-04	3.88E-04	1.54E-04	8.64E-05	2.07E-04	8.04E-05	3.91E-06	8.14E-04
ULI WALL	G	1.58E-03	3.22E-04	1.11E-04	1.11E-04	2.91E-04	1.29E-04	9.30E-05	2.08E-04	5.62E-05	4.49E-06	2.80E-04
	B	0.0	0.0	0.0	0.0	0.0	0.0	0.0	0.0	0.0	0.0	5.25E-04
	T	1.58E-03	3.22E-04	1.11E-04	1.11E-04	2.91E-04	1.29E-04	9.30E-05	2.08E-04	5.62E-05	4.49E-06	8.05E-04
LLI WALL	G	2.01E-03	8.28E-05	1.50E-04	1.50E-04	4.46E-04	1.23E-04	9.51E-05	9.90E-05	3.78E-04	3.04E-06	2.92E-04
	B	0.0	0.0	0.0	0.0	0.0	0.0	0.0	0.0	0.0	0.0	5.25E-04
	T	2.01E-03	8.28E-05	1.50E-04	1.50E-04	4.46E-04	1.23E-04	9.51E-05	9.90E-05	3.78E-04	3.04E-06	8.17E-04
KIDNEYS	G	1.66E-04	8.97E-04	1.56E-04	1.56E-04	3.52E-04	1.77E-04	1.14E-04	1.22E-03	1.92E-05	1.36E-05	2.62E-04
	B	0.0	0.0	0.0	0.0	0.0	0.0	0.0	0.0	0.0	0.0	5.25E-04
	T	1.66E-04	8.97E-04	1.56E-04	1.56E-04	3.52E-04	1.77E-04	1.14E-04	1.22E-03	1.92E-05	1.36E-05	7.87E-04
LIVER	G	9.51E-05	5.95E-04	1.07E-04	1.07E-04	1.50E-04	1.64E-04	1.01E-04	1.60E-04	1.23E-05	2.71E-05	2.61E-04
	B	0.0	0.0	0.0	0.0	0.0	0.0	0.0	0.0	0.0	0.0	5.25E-04
	T	9.51E-05	5.95E-04	1.07E-04	1.07E-04	1.50E-04	1.64E-04	1.01E-04	1.60E-04	1.23E-05	2.71E-05	7.86E-04
LUNGS	G	2.08E-05	3.44E-04	1.47E-04	1.47E-04	1.80E-04	1.51E-04	1.04E-04	3.18E-04	3.53E-06	1.65E-04	2.18E-04
	B	0.0	0.0	0.0	0.0	0.0	0.0	0.0	0.0	0.0	0.0	5.25E-04
	T	2.08E-05	3.44E-04	1.47E-04	1.47E-04	1.80E-04	1.51E-04	1.04E-04	3.18E-04	3.53E-06	1.65E-04	7.43E-04
RESP LYM NODE	G	2.08E-05	3.44E-04	1.47E-04	1.47E-04	1.80E-04	1.51E-04	1.04E-04	3.18E-04	3.53E-06	1.65E-04	2.18E-04
	B	0.0	0.0	0.0	0.0	0.0	0.0	0.0	0.0	0.0	0.0	5.25E-04
	T	2.08E-05	3.44E-04	1.47E-04	1.47E-04	1.80E-04	1.51E-04	1.04E-04	3.18E-04	3.53E-06	1.65E-04	7.43E-04
MUSCLE*	G	2.92E-04	2.63E-04	1.65E-04	1.65E-04	1.94E-04	1.53E-04	1.39E-04	2.17E-04	1.85E-04	2.03E-04	2.14E-04
	B	0.0	0.0	0.0	0.0	0.0	0.0	0.0	0.0	0.0	0.0	5.25E-04
	T	2.92E-04	2.63E-04	1.65E-04	1.65E-04	1.94E-04	1.53E-04	1.39E-04	2.17E-04	1.85E-04	2.03E-04	7.39E-04
OVARIES	G	1.11E-01	1.05E-04	1.51E-04	1.51E-04	4.65E-04	1.34E-04	7.02E-05	1.17E-04	8.63E-49	3.61E-06	2.28E-04
	B	3.34E 00	0.0	0.0	0.0	0.0	0.0	0.0	0.0	0.0	0.0	5.25E-04
	T	3.45E 00	1.05E-04	1.51E-04	1.51E-04	4.65E-04	1.34E-04	7.02E-05	1.17E-04	8.63E-49	3.61E-06	7.54E-04

40-ZIRCONIUM-97 CONTINUED

TARGET ORGANS		SOURCE ORGANS										
		OVARIES	PANCREAS	COR BONE	CAN BONE	R MARROW	Y MARROW	SKIN	SPLEEN	TESTES	THYROID	T BODY
PANCREAS	G	1.09E-04	3.09E-02	1.44E-04	1.44E-04	2.12E-04	1.72E-04	8.11E-05	2.74E-03	1.16E-05	1.28E-05	2.52E-04
	B	0.0	3.68E-01	0.0	0.0	0.0	0.0	0.0	0.0	0.0	0.0	5.25E-04
	T	1.09E-04	3.99E-01	1.44E-04	1.44E-04	2.12E-04	1.72E-04	8.11E-05	2.74E-03	1.16E-05	1.28E-05	7.77E-04
SKELETON BONE	G	1.34E-04	1.33E-04	5.07E-04	5.07E-04	3.38E-04	3.77E-04	1.27E-04	1.13E-04	9.78E-05	1.11E-04	2.17E-04
	B	0.0	0.0	7.35E-03	4.17E-03	2.12E-03	0.0	0.0	0.0	0.0	0.0	5.25E-04
	T	1.34E-04	1.33E-04	7.86E-03	4.68E-03	2.46E-03	3.77E-04	1.27E-04	1.13E-04	9.78E-05	1.11E-04	7.42E-04
R MARROW	G	4.40E-04	2.50E-04	4.56E-04	4.56E-04	1.08E-03	3.90E-04	1.18E-04	1.66E-04	7.73E-05	1.21E-04	2.39E-04
	B	0.0	0.0	5.05E-04	1.06E-02	1.74E-02	0.0	0.0	0.0	0.0	0.0	5.25E-04
	T	4.40E-04	2.50E-04	9.61E-04	1.11E-02	1.85E-02	3.90E-04	1.18E-04	1.66E-04	7.73E-05	1.21E-04	7.64E-04
Y MARROW	G	1.78E-04	1.57E-04	4.38E-04	4.38E-04	4.17E-04	6.39E-04	1.35E-04	1.69E-04	4.26E-05	5.94E-05	2.03E-04
	B	0.0	0.0	0.0	0.0	0.0	2.45E-02	0.0	0.0	0.0	0.0	5.25E-04
	T	1.78E-04	1.57E-04	4.38E-04	4.38E-04	4.17E-04	2.52E-02	1.35E-04	1.69E-04	4.26E-05	5.94E-05	7.28E-04
T E CL	G	1.34E-04	1.33E-04	5.07E-04	5.07E-04	4.55E-04	4.16E-04	1.27E-04	1.13E-04	9.78E-05	1.11E-04	2.17E-04
	B	0.0	0.0	4.65E-03	6.93E-03	7.64E-03	6.13E-03	0.0	0.0	0.0	0.0	5.25E-04
	T	1.34E-04	1.33E-04	5.15E-03	7.44E-03	8.09E-03	6.55E-03	1.27E-04	1.13E-04	9.78E-05	1.11E-04	7.42E-04
SKIN	G	8.17E-05	8.04E-05	1.30E-04	1.30E-04	1.13E-04	1.44E-04	3.06E-04	9.56E-05	2.35E-04	1.33E-04	1.38E-04
	B	0.0	0.0	0.0	0.0	0.0	0.0	1.41E-02	0.0	0.0	0.0	5.25E-04
	T	8.17E-05	8.04E-05	1.30E-04	1.30E-04	1.13E-04	1.44E-04	1.44E-02	9.56E-05	2.35E-04	1.33E-04	6.63E-04
SPLEEN	G	9.77E-05	2.72E-03	1.27E-04	1.27E-04	1.40E-04	1.59E-04	1.07E-04	1.89E-02	1.48E-05	2.56E-05	2.60E-04
	B	0.0	0.0	0.0	0.0	0.0	0.0	0.0	2.04E-01	0.0	0.0	5.25E-04
	T	9.77E-05	2.72E-03	1.27E-04	1.27E-04	1.40E-04	1.59E-04	1.07E-04	2.23E-01	1.48E-05	2.56E-05	7.85E-04
TESTES	G	8.63E-49	1.46E-05	9.58E-05	9.58E-05	6.34E-05	1.40E-04	1.33E-04	1.61E-05	5.25E-02	8.57E-07	2.66E-04
	B	0.0	0.0	0.0	0.0	0.0	0.0	0.0	0.0	1.05E 00	0.0	5.25E-04
	T	8.63E-49	1.46E-05	9.58E-05	9.58E-05	6.34E-05	1.40E-04	1.33E-04	1.61E-05	1.10E 00	8.57E-07	7.91E-04
THYMUS	G	1.07E-05	8.11E-05	1.17E-04	1.17E-04	8.81E-05	6.34E-05	1.19E-04	8.62E-05	2.36E-06	6.11E-04	2.12E-04
	B	0.0	0.0	0.0	0.0	0.0	0.0	0.0	0.0	0.0	0.0	5.25E-04
	T	1.07E-05	8.11E-05	1.17E-04	1.17E-04	8.81E-05	6.34E-05	1.19E-04	8.62E-05	2.36E-06	6.11E-04	7.38E-04
THYROID	G	3.61E-06	1.78E-05	1.22E-04	1.22E-04	1.37E-04	7.59E-05	1.17E-04	2.40E-05	8.57E-07	7.06E-02	2.22E-04
	B	0.0	0.0	0.0	0.0	0.0	0.0	0.0	0.0	0.0	1.84E 00	5.25E-04
	T	3.61E-06	1.78E-05	1.22E-04	1.22E-04	1.37E-04	7.59E-05	1.17E-04	2.40E-05	8.57E-07	1.91E 00	7.47E-04
UTERUS	G	2.53E-03	9.22E-05	1.11E-04	1.11E-04	2.59E-04	9.97E-05	9.92E-05	7.92E-05	8.63E-49	3.45E-06	3.05E-04
	B	0.0	0.0	0.0	0.0	0.0	0.0	0.0	0.0	0.0	0.0	5.25E-04
	T	2.53E-03	9.22E-05	1.11E-04	1.11E-04	2.59E-04	9.97E-05	9.92E-05	7.92E-05	8.63E-49	3.45E-06	8.30E-04
T BODY	G	2.92E-04	2.86E-04	2.12E-04	2.12E-04	2.35E-04	1.90E-04	1.39E-04	2.49E-04	2.12E-04	1.93E-04	2.14E-04
	B	5.25E-04	5.25E-04	5.25E-04	5.25E-04	5.25E-04	5.25E-04	5.25E-04	5.25E-04	5.25E-04	5.25E-04	5.25E-04
	T	8.17E-04	8.11E-04	7.38E-04	7.38E-04	7.60E-04	7.15E-04	6.64E-04	7.74E-04	7.37E-04	7.18E-04	7.39E-04

*"MUSCLE" VALUES MAY BE USED FOR "SEPARABLE FAT" WITH ADJUSTMENT (SEE TEXT)
PRINCIPLE REFERENCE-SIIVOLA, A. AND GRAEFFE, G., NUCL. PHYS. A109, 369 (1968)
DATE DECAY DATA REVIEWED-JULY 1969

S, AVERAGE DOSE EQUIVALENT PER UNIT ACCUMULATED ACTIVITY (REM/UCI-DAY), FOR 41-NIOBIUM-95M (TR=8.660E 01 HOURS)

DATE OF TABLE 11-27-74

TARGET ORGANS		SOURCE ORGANS										
		ADRENALS	BLAD CON	S CONT	SI+CONT	ULI CONT	LLI CONT	KIDNEYS	LIVER	LUNG	RESP LYM NODE	MUSCLE*
ADRENALS	G	1.52E-02	2.14E-06	2.51E-05	1.67E-05	9.84E-06	5.00E-06	1.28E-04	5.65E-05	2.69E-05	2.69E-05	1.95E-05
	B	6.20E-01	0.0	0.0	0.0	0.0	0.0	0.0	0.0	0.0	0.0	0.0
	T	6.35E-01	2.14E-06	2.51E-05	1.67E-05	9.84E-06	5.00E-06	1.28E-04	5.65E-05	2.69E-05	2.69E-05	1.95E-05
BLAD WALL	G	1.27E-06	1.28E-03	2.64E-06	2.87E-05	2.25E-05	6.95E-05	3.43E-06	1.90E-06	5.73E-07	5.73E-07	2.00E-05
	B	0.0	2.17E-02	0.0	0.0	0.0	0.0	0.0	0.0	0.0	0.0	0.0
	T	1.27E-06	2.30E-02	2.64E-06	2.87E-05	2.25E-05	6.95E-05	3.43E-06	1.90E-06	5.73E-07	5.73E-07	2.00E-05
GI TRACT S WALL	G	3.12E-05	3.07E-06	8.44E-04	4.03E-05	4.17E-05	1.91E-05	3.59E-05	2.09E-05	2.03E-05	2.03E-05	1.56E-05
	B	0.0	0.0	1.74E-02	0.0	0.0	0.0	0.0	0.0	0.0	0.0	0.0
	T	3.12E-05	3.07E-06	1.82E-02	4.03E-05	4.17E-05	1.91E-05	3.59E-05	2.09E-05	2.03E-05	2.03E-05	1.56E-05
SI+CONT	G	9.19E-06	3.02E-05	2.79E-05	5.59E-04	2.04E-04	1.14E-04	3.05E-05	1.79E-05	2.22E-06	2.22E-06	1.75E-05
	B	0.0	0.0	0.0	1.08E-02	0.0	0.0	0.0	0.0	0.0	0.0	0.0
	T	9.19E-06	3.02E-05	2.79E-05	1.14E-02	2.04E-04	1.14E-04	3.05E-05	1.79E-05	2.22E-06	2.22E-06	1.75E-05
ULI WALL	G	9.94E-06	2.50E-05	3.83E-05	4.08E-04	7.54E-04	5.46E-05	3.06E-05	2.64E-05	2.73E-06	2.73E-06	1.91E-05
	B	0.0	0.0	0.0	0.0	1.97E-02	0.0	0.0	0.0	0.0	0.0	0.0
	T	9.94E-06	2.50E-05	3.83E-05	4.08E-04	2.05E-02	5.46E-05	3.06E-05	2.64E-05	2.73E-06	2.73E-06	1.91E-05
LLI WALL	G	2.59E-06	7.61E-05	1.38E-05	9.67E-05	3.41E-05	9.57E-04	9.11E-06	2.65E-06	1.16E-06	1.16E-06	1.88E-05
	B	0.0	0.0	0.0	0.0	0.0	3.21E-02	0.0	0.0	0.0	0.0	0.0
	T	2.59E-06	7.61E-05	1.38E-05	9.67E-05	3.41E-05	3.31E-02	9.11E-06	2.65E-06	1.16E-06	1.16E-06	1.88E-05
KIDNEYS	G	1.42E-04	3.12E-06	3.73E-05	3.25E-05	2.93E-05	1.01E-05	1.68E-03	4.15E-05	9.56E-06	9.56E-06	1.69E-05
	B	0.0	0.0	0.0	0.0	0.0	0.0	2.80E-02	0.0	0.0	0.0	0.0
	T	1.42E-04	3.12E-06	3.73E-05	3.25E-05	2.93E-05	1.01E-05	2.97E-02	4.15E-05	9.56E-06	9.56E-06	1.69E-05
LIVER	G	5.53E-05	2.37E-06	2.11E-05	2.00E-05	2.79E-05	3.11E-06	4.16E-05	4.46E-04	2.77E-05	2.77E-05	1.24E-05
	B	0.0	0.0	0.0	0.0	0.0	0.0	0.0	4.82E-03	0.0	0.0	0.0
	T	5.53E-05	2.37E-06	2.11E-05	2.00E-05	2.79E-05	3.11E-06	4.16E-05	5.27E-03	2.77E-05	2.77E-05	1.24E-05
LUNGS	G	2.69E-05	3.05E-07	1.84E-05	2.79E-06	3.00E-06	9.52E-07	9.06E-06	2.83E-05	3.77E-04	3.77E-04	1.68E-05
	B	0.0	0.0	0.0	0.0	0.0	0.0	0.0	0.0	8.68E-03	8.68E-03	0.0
	T	2.69E-05	3.05E-07	1.84E-05	2.79E-06	3.00E-06	9.52E-07	9.06E-06	2.83E-05	9.05E-03	9.05E-03	1.68E-05
RESP LYM NODE	G	2.69E-05	3.05E-07	1.84E-05	2.79E-06	3.00E-06	9.52E-07	9.06E-06	2.83E-05	3.73E-04	3.77E-04	1.68E-05
	B	0.0	0.0	0.0	0.0	0.0	0.0	0.0	0.0	8.48E-03	5.78E-01	0.0
	T	2.69E-05	3.05E-07	1.84E-05	2.79E-06	3.00E-06	9.52E-07	9.06E-06	2.83E-05	8.85E-03	5.79E-01	1.68E-05
MUSCLE*	G	1.95E-05	2.00E-05	1.56E-05	1.75E-05	1.62E-05	1.88E-05	1.69E-05	1.24E-05	1.68E-05	1.68E-05	2.14E-05
	B	0.0	0.0	0.0	0.0	0.0	0.0	0.0	0.0	0.0	0.0	3.10E-04
	T	1.95E-05	2.00E-05	1.56E-05	1.75E-05	1.62E-05	1.88E-05	1.69E-05	1.24E-05	1.68E-05	1.68E-05	3.31E-04
OVARIES	G	6.21E-06	7.97E-05	4.63E-06	1.21E-04	1.38E-04	2.45E-04	1.31E-05	4.96E-06	1.35E-06	1.35E-06	2.48E-05
	B	0.0	0.0	0.0	0.0	0.0	0.0	0.0	0.0	0.0	0.0	0.0
	T	6.21E-06	7.97E-05	4.63E-06	1.21E-04	1.38E-04	2.45E-04	1.31E-05	4.96E-06	1.35E-06	1.35E-06	2.48E-05

41-NIOBIUM-95M CONTINUED

SOURCE ORGANS

TARGET ORGANS		ADRENALS	BLAD CON	S CONT	SI+CONT	ULI CONT	LLI CONT	KIDNEYS	LIVER	LUNG	RESP LYM NODE	MUSCLE*
PANCREAS	G	9.13E-05	3.23E-06	2.02E-04	2.18E-05	2.52E-05	7.48E-06	6.87E-05	4.25E-05	2.71E-05	2.71E-05	2.19E-05
	B	0.0	0.0	0.0	0.0	0.0	0.0	0.0	0.0	0.0	0.0	0.0
	T	9.13E-05	3.23E-06	2.02E-04	2.18E-05	2.52E-05	7.48E-06	6.87E-05	4.25E-05	2.71E-05	2.71E-05	2.19E-05
SKELETON BONE	G	1.74E-05	7.84E-06	7.66E-06	1.07E-05	9.51E-06	1.43E-05	1.23E-05	9.70E-06	1.27E-05	1.27E-05	1.17E-05
	B	0.0	0.0	0.0	0.0	0.0	0.0	0.0	0.0	0.0	0.0	0.0
	T	1.74E-05	7.84E-06	7.66E-06	1.07E-05	9.51E-06	1.43E-05	1.23E-05	9.70E-06	1.27E-05	1.27E-05	1.17E-05
R MARROW	G	3.16E-05	1.76E-05	1.36E-05	3.53E-05	3.00E-05	4.44E-05	3.19E-05	1.40E-05	1.60E-05	1.60E-05	1.87E-05
	B	0.0	0.0	0.0	0.0	0.0	0.0	0.0	0.0	0.0	0.0	0.0
	T	3.16E-05	1.76E-05	1.36E-05	3.53E-05	3.00E-05	4.44E-05	3.19E-05	1.40E-05	1.60E-05	1.60E-05	1.87E-05
Y MARROW	G	1.68E-05	7.22E-06	1.06E-05	1.49E-05	1.36E-05	1.77E-05	1.52E-05	1.43E-05	1.33E-05	1.33E-05	1.48E-05
	B	0.0	0.0	0.0	0.0	0.0	0.0	0.0	0.0	0.0	0.0	0.0
	T	1.68E-05	7.22E-06	1.06E-05	1.49E-05	1.36E-05	1.77E-05	1.52E-05	1.43E-05	1.33E-05	1.33E-05	1.48E-05
T E CL	G	1.74E-05	7.84E-06	7.66E-06	1.07E-05	9.51E-06	1.43E-05	1.23E-05	9.70E-06	1.27E-05	1.27E-05	1.17E-05
	B	0.0	0.0	0.0	0.0	0.0	0.0	0.0	0.0	0.0	0.0	0.0
	T	1.74E-05	7.84E-06	7.66E-06	1.07E-05	9.51E-06	1.43E-05	1.23E-05	9.70E-06	1.27E-05	1.27E-05	1.17E-05
SKIN	G	6.47E-06	6.14E-06	5.19E-06	4.99E-06	4.98E-06	5.83E-06	6.48E-06	5.80E-06	6.48E-06	6.48E-06	1.07E-05
	B	0.0	0.0	0.0	0.0	0.0	0.0	0.0	0.0	0.0	0.0	0.0
	T	6.47E-06	6.14E-06	5.19E-06	4.99E-06	4.98E-06	5.83E-06	6.48E-06	5.80E-06	6.48E-06	6.48E-06	1.07E-05
SPLEEN	G	7.17E-05	1.67E-06	1.07E-04	1.66E-05	1.47E-05	8.42E-06	9.95E-05	1.00E-05	2.51E-05	2.51E-05	1.72E-05
	B	0.0	0.0	0.0	0.0	0.0	0.0	0.0	0.0	0.0	0.0	0.0
	T	7.17E-05	1.67E-06	1.07E-04	1.66E-05	1.47E-05	8.42E-06	9.95E-05	1.00E-05	2.51E-05	2.51E-05	1.72E-05
TESTES	G	5.28E-07	4.85E-05	6.65E-07	3.81E-06	3.66E-06	2.17E-05	1.30E-06	9.44E-07	1.52E-07	1.52E-07	1.30E-05
	B	0.0	0.0	0.0	0.0	0.0	0.0	0.0	0.0	0.0	0.0	0.0
	T	5.28E-07	4.85E-05	6.65E-07	3.81E-06	3.66E-06	2.17E-05	1.30E-06	9.44E-07	1.52E-07	1.52E-07	1.30E-05
THYMUS	G	4.75E-06	2.03E-07	2.63E-06	1.19E-06	1.33E-06	4.37E-07	2.32E-06	7.62E-06	4.25E-05	4.25E-05	3.88E-05
	B	0.0	0.0	0.0	0.0	0.0	0.0	0.0	0.0	0.0	0.0	0.0
	T	4.75E-06	2.03E-07	2.63E-06	1.19E-06	1.33E-06	4.37E-07	2.32E-06	7.62E-06	4.25E-05	4.25E-05	3.88E-05
THYROID	G	1.79E-06	4.67E-08	1.33E-06	2.68E-07	2.92E-07	1.06E-07	7.53E-07	2.39E-06	9.29E-06	9.29E-06	1.77E-05
	B	0.0	0.0	0.0	0.0	0.0	0.0	0.0	0.0	0.0	0.0	0.0
	T	1.79E-06	4.67E-08	1.33E-06	2.68E-07	2.92E-07	1.06E-07	7.53E-07	2.39E-06	9.29E-06	9.29E-06	1.77E-05
UTERUS	G	2.33E-05	1.71E-04	8.91E-06	1.01E-04	4.99E-05	7.38E-05	1.13E-05	4.24E-06	1.05E-06	1.05E-06	3.10E-05
	B	0.0	0.0	0.0	0.0	0.0	0.0	0.0	0.0	0.0	0.0	0.0
	T	2.33E-05	1.71E-04	8.91E-06	1.01E-04	4.99E-05	7.38E-05	1.13E-05	4.24E-06	1.05E-06	1.05E-06	3.10E-05
T BODY	G	2.30E-05	2.51E-05	2.40E-05	2.64E-05	2.57E-05	2.57E-05	2.31E-05	2.32E-05	2.07E-05	2.07E-05	1.96E-05
	B	1.24E-04	1.39E-05	3.72E-05	9.92E-05	5.92E-05	7.35E-05	1.24E-04	1.24E-04	1.24E-04	1.24E-04	1.24E-04
	T	1.47E-04	3.91E-05	6.12E-05	1.26E-04	8.49E-05	9.91E-05	1.47E-04	1.47E-04	1.45E-04	1.45E-04	1.44E-04

CONTINUED NEXT PAGE

41-NIOBIUM-95M CONTINUED

TARGET ORGANS		SOURCE ORGANS										
		OVARIES	PANCREAS	COR BONE	CAN BONE	R MARROW	Y MARROW	SKIN	SPLEEN	TESTES	THYROID	T BODY
ADRENALS	G	4.29E-06	8.88E-05	1.46E-05	1.46E-05	2.92E-05	1.54E-05	9.04E-06	6.99E-05	5.28E-07	1.79E-06	2.53E-05
	B	0.0	0.0	0.0	0.0	0.0	0.0	0.0	0.0	0.0	0.0	1.24E-04
	T	4.29E-06	8.88E-05	1.46E-05	1.46E-05	2.92E-05	1.54E-05	9.04E-06	6.99E-05	5.28E-07	1.79E-06	1.49E-04
BLAD WALL	G	7.32E-05	1.72E-06	5.25E-06	5.25E-06	8.07E-06	3.85E-06	5.93E-06	1.81E-06	5.14E-05	4.72E-08	2.46E-05
	B	0.0	0.0	0.0	0.0	0.0	0.0	0.0	0.0	0.0	0.0	1.24E-04
	T	7.32E-05	1.72E-06	5.25E-06	5.25E-06	8.07E-06	3.85E-06	5.93E-06	1.81E-06	5.14E-05	4.72E-08	1.49E-04
GI TRACT S WALL	G	8.47E-06	2.18E-04	6.27E-06	6.27E-06	1.18E-05	8.03E-06	6.17E-06	1.03E-04	5.95E-07	5.39E-07	2.55E-05
	B	0.0	0.0	0.0	0.0	0.0	0.0	0.0	0.0	0.0	0.0	1.24E-04
	T	8.47E-06	2.18E-04	6.27E-06	6.27E-06	1.18E-05	8.03E-06	6.17E-06	1.03E-04	5.95E-07	5.39E-07	1.49E-04
SI+CONT	G	1.39E-04	1.97E-05	8.30E-06	8.30E-06	2.82E-05	1.15E-05	5.28E-06	1.51E-05	4.62E-06	1.61E-07	2.64E-05
	B	0.0	0.0	0.0	0.0	0.0	0.0	0.0	0.0	0.0	0.0	1.24E-04
	T	1.39E-04	1.97E-05	8.30E-06	8.30E-06	2.82E-05	1.15E-05	5.28E-06	1.51E-05	4.62E-06	1.61E-07	1.50E-04
ULI WALL	G	1.50E-04	2.36E-05	8.07E-06	8.07E-06	2.29E-05	1.03E-05	5.15E-06	1.32E-05	3.90E-06	1.19E-07	2.46E-05
	B	0.0	0.0	0.0	0.0	0.0	0.0	0.0	0.0	0.0	0.0	1.24E-04
	T	1.50E-04	2.36E-05	8.07E-06	8.07E-06	2.29E-05	1.03E-05	5.15E-06	1.32E-05	3.90E-06	1.19E-07	1.49E-04
LLI WALL	G	1.91E-04	6.08E-06	1.17E-05	1.17E-05	3.25E-05	9.95E-06	5.46E-06	6.85E-06	2.97E-05	8.69E-08	2.29E-05
	B	0.0	0.0	0.0	0.0	0.0	0.0	0.0	0.0	0.0	0.0	1.24E-04
	T	1.91E-04	6.08E-06	1.17E-05	1.17E-05	3.25E-05	9.95E-06	5.46E-06	6.85E-06	2.97E-05	8.69E-08	1.47E-04
KIDNEYS	G	1.05E-05	6.79E-05	9.97E-06	9.97E-06	2.42E-05	1.21E-05	7.19E-06	1.01E-04	6.63E-07	4.29E-07	2.36E-05
	B	0.0	0.0	0.0	0.0	0.0	0.0	0.0	0.0	0.0	0.0	1.24E-04
	T	1.05E-05	6.79E-05	9.97E-06	9.97E-06	2.42E-05	1.21E-05	7.19E-06	1.01E-04	6.63E-07	4.29E-07	1.48E-04
LIVER	G	6.30E-06	4.66E-05	7.27E-06	7.27E-06	1.06E-05	1.08E-05	6.24E-06	1.10E-05	4.53E-07	1.32E-06	2.28E-05
	B	0.0	0.0	0.0	0.0	0.0	0.0	0.0	0.0	0.0	0.0	1.24E-04
	T	6.30E-06	4.66E-05	7.27E-06	7.27E-06	1.06E-05	1.08E-05	6.24E-06	1.10E-05	4.53E-07	1.32E-06	1.47E-04
LUNGS	G	8.12E-07	2.66E-05	1.06E-05	1.06E-05	1.31E-05	1.06E-05	6.94E-06	2.45E-05	1.33E-07	1.02E-05	2.03E-05
	B	0.0	0.0	0.0	0.0	0.0	0.0	0.0	0.0	0.0	0.0	1.24E-04
	T	8.12E-07	2.66E-05	1.06E-05	1.06E-05	1.31E-05	1.06E-05	6.94E-06	2.45E-05	1.33E-07	1.02E-05	1.44E-04
RESP LYM NODE	G	8.12E-07	2.66E-05	1.06E-05	1.06E-05	1.31E-05	1.06E-05	6.94E-06	2.45E-05	1.33E-07	1.02E-05	2.03E-05
	B	0.0	0.0	0.0	0.0	0.0	0.0	0.0	0.0	0.0	0.0	1.24E-04
	T	8.12E-07	2.66E-05	1.06E-05	1.06E-05	1.31E-05	1.06E-05	6.94E-06	2.45E-05	1.33E-07	1.02E-05	1.44E-04
MUSCLE*	G	2.48E-05	2.19E-05	1.17E-05	1.17E-05	1.40E-05	1.07E-05	1.07E-05	1.72E-05	1.30E-05	1.77E-05	1.96E-05
	B	0.0	0.0	0.0	0.0	0.0	0.0	0.0	0.0	0.0	0.0	1.24E-04
	T	2.48E-05	2.19E-05	1.17E-05	1.17E-05	1.40E-05	1.07E-05	1.07E-05	1.72E-05	1.30E-05	1.77E-05	1.44E-04
OVARIES	G	2.66E-02	3.45E-06	7.96E-06	7.96E-06	2.56E-05	1.45E-05	5.03E-06	6.71E-06	3.68E-47	1.01E-07	2.72E-05
	B	7.89E-01	0.0	0.0	0.0	0.0	0.0	0.0	0.0	0.0	0.0	1.24E-04
	T	8.15E-01	3.45E-06	7.96E-06	7.96E-06	2.56E-05	1.45E-05	5.03E-06	6.71E-06	3.68E-47	1.01E-07	1.51E-04

41-NIOBIUM-95M CONTINUED

SOURCE ORGANS

TARGET ORGANS		OVARIES	PANCREAS	COR BONE	CAN BONE	R MARROW	Y MARROW	SKIN	SPLEEN	TESTES	THYROID	T BODY
PANCREAS	G	5.33E-06	5.75E-03	1.16E-05	1.16E-05	1.73E-05	1.42E-05	6.18E-06	2.26E-04	7.73E-07	1.13E-06	2.81E-05
	B	0.0	8.68E-02	0.0	0.0	0.0	0.0	0.0	0.0	0.0	0.0	1.24E-04
	T	5.33E-06	9.25E-02	1.16E-05	1.16E-05	1.73E-05	1.42E-05	6.18E-06	2.26E-04	7.73E-07	1.13E-06	1.52E-04
SKELETON BONE	G	1.24E-05	1.18E-05	7.20E-05	7.20E-05	4.72E-05	5.57E-05	1.09E-05	9.82E-06	8.02E-06	8.81E-06	2.35E-05
	B	0.0	0.0	1.74E-03	1.13E-03	4.03E-04	0.0	0.0	0.0	0.0	0.0	1.24E-04
	T	1.24E-05	1.18E-05	1.81E-03	1.20E-03	4.50E-04	5.57E-05	1.09E-05	9.82E-06	8.02E-06	8.81E-06	1.47E-04
R MARROW	G	4.24E-05	2.26E-05	6.71E-05	6.71E-05	1.72E-04	5.78E-05	1.03E-05	1.50E-05	6.57E-06	9.68E-06	2.62E-05
	B	0.0	0.0	3.07E-05	2.01E-03	4.44E-03	0.0	0.0	0.0	0.0	0.0	1.24E-04
	T	4.24E-05	2.26E-05	9.77E-05	2.08E-03	4.61E-03	5.78E-05	1.03E-05	1.50E-05	6.57E-06	9.68E-06	1.50E-04
Y MARROW	G	1.65E-05	1.37E-05	6.60E-05	6.60E-05	6.37E-05	1.04E-04	1.17E-05	1.44E-05	3.17E-06	4.61E-06	2.24E-05
	B	0.0	0.0	0.0	0.0	0.0	5.78E-03	0.0	0.0	0.0	0.0	1.24E-04
	T	1.65E-05	1.37E-05	6.60E-05	6.60E-05	6.37E-05	5.89E-03	1.17E-05	1.44E-05	3.17E-06	4.61E-06	1.46E-04
T E CL	G	1.24E-05	1.18E-05	7.16E-05	7.16E-05	6.82E-05	6.38E-05	1.09E-05	9.82E-06	8.02E-06	8.81E-06	2.35E-05
	B	0.0	0.0	1.09E-03	1.97E-03	1.58E-03	1.45E-03	0.0	0.0	0.0	0.0	1.24E-04
	T	1.24E-05	1.18E-05	1.16E-03	2.04E-03	1.65E-03	1.51E-03	1.09E-05	9.82E-06	8.02E-06	8.81E-06	1.47E-04
SKIN	G	4.94E-06	4.76E-06	8.54E-06	8.54E-06	7.76E-06	9.58E-06	5.23E-05	5.58E-06	1.98E-05	9.27E-06	1.18E-05
	B	0.0	0.0	0.0	0.0	0.0	0.0	3.34E-03	0.0	0.0	0.0	1.24E-04
	T	4.94E-06	4.76E-06	8.54E-06	8.54E-06	7.76E-06	9.58E-06	3.39E-03	5.58E-06	1.98E-05	9.27E-06	1.36E-04
SPLEEN	G	6.08E-06	2.30E-04	7.57E-06	7.57E-06	9.81E-06	1.13E-05	6.34E-06	2.94E-03	3.56E-07	1.31E-06	2.35E-05
	B	0.0	0.0	0.0	0.0	0.0	0.0	0.0	4.82E-02	0.0	0.0	1.24E-04
	T	6.08E-06	2.30E-04	7.57E-06	7.57E-06	9.81E-06	1.13E-05	6.34E-06	5.11E-02	3.56E-07	1.31E-06	1.47E-04
TESTES	G	3.68E-47	8.04E-07	6.59E-06	6.59E-06	3.36E-06	1.14E-05	1.37E-05	7.62E-07	9.80E-03	1.34E-08	1.68E-05
	B	0.0	0.0	0.0	0.0	0.0	0.0	0.0	0.0	2.48E-01	0.0	1.24E-04
	T	3.68E-47	8.04E-07	6.59E-06	6.59E-06	3.36E-06	1.14E-05	1.37E-05	7.62E-07	2.58E-01	1.34E-08	1.41E-04
THYMUS	G	4.43E-07	8.74E-06	5.46E-06	5.46E-06	7.77E-06	7.60E-06	7.70E-06	4.10E-06	5.62E-08	4.55E-05	3.20E-05
	B	0.0	0.0	0.0	0.0	0.0	0.0	0.0	0.0	0.0	0.0	1.24E-04
	T	4.43E-07	8.74E-06	5.46E-06	5.46E-06	7.77E-06	7.60E-06	7.70E-06	4.10E-06	5.62E-08	4.55E-05	1.56E-04
THYROID	G	1.01E-07	1.69E-06	1.02E-05	1.02E-05	8.03E-06	1.22E-05	9.02E-06	1.28E-06	1.34E-08	1.44E-02	1.86E-05
	B	0.0	0.0	0.0	0.0	0.0	0.0	0.0	0.0	0.0	4.34E-01	1.24E-04
	T	1.01E-07	1.69E-06	1.02E-05	1.02E-05	8.03E-06	1.22E-05	9.02E-06	1.28E-06	1.34E-08	4.48E-01	1.43E-04
UTERUS	G	2.28E-04	6.88E-06	6.62E-06	6.62E-06	2.42E-05	6.76E-06	4.39E-06	4.31E-06	3.68E-47	9.47E-08	2.73E-05
	B	0.0	0.0	0.0	0.0	0.0	0.0	0.0	0.0	0.0	0.0	1.24E-04
	T	2.28E-04	6.88E-06	6.62E-06	6.62E-06	2.42E-05	6.76E-06	4.39E-06	4.31E-06	3.68E-47	9.47E-08	1.51E-04
T BODY	G	2.68E-05	2.63E-05	2.04E-05	2.04E-05	2.21E-05	1.83E-05	1.19E-05	2.32E-05	1.96E-05	1.86E-05	2.00E-05
	B	1.24E-04	1.24E-04	1.24E-04	1.24E-04	1.24E-04	1.24E-04	1.24E-04	1.24E-04	1.24E-04	1.24E-04	1.24E-04
	T	1.51E-04	1.50E-04	1.44E-04	1.44E-04	1.46E-04	1.42E-04	1.36E-04	1.47E-04	1.44E-04	1.43E-04	1.44E-04

*"MUSCLE" VALUES MAY BE USED FOR "SEPARABLE FAT" WITH ADJUSTMENT (SEE TEXT)
PRINCIPLE REFERENCE-FOIN, C. AND OMS, J., NUCL. PHYS. A123, 513 (1969)
DATE DECAY DATA REVIEWED-JULY 1969

S, AVERAGE DOSE EQUIVALENT PER UNIT ACCUMULATED ACTIVITY (REM/UCI-DAY), FOR 41-NIOBIUM-95 (TR=3.500E 01 DAYS)

DATE OF TABLE 11-27-74

TARGET ORGANS		SOURCE ORGANS										
		ADRENALS	BLAD CON	S CONT	SI+CONT	ULI CONT	LLI CONT	KIDNEYS	LIVER	LUNG	RESP LYM NODE	MUSCLE*
ADRENALS	G	6.02E-02	3.20E-05	2.79E-04	1.58E-04	1.50E-04	6.52E-05	1.62E-03	6.32E-04	3.14E-04	3.14E-04	2.00E-04
	B	1.63E-01	0.0	0.0	0.0	0.0	0.0	0.0	0.0	0.0	0.0	0.0
	T	2.23E-01	3.20E-05	2.79E-04	1.58E-04	1.50E-04	6.52E-05	1.62E-03	6.32E-04	3.14E-04	3.14E-04	2.00E-04
BLAD WALL	G	2.47E-05	9.30E-03	6.32E-05	3.57E-04	2.66E-04	6.91E-04	5.70E-05	3.41E-05	1.11E-05	1.11E-05	2.31E-04
	B	0.0	5.71E-03	0.0	0.0	0.0	0.0	0.0	0.0	0.0	0.0	0.0
	T	2.47E-05	1.50E-02	6.32E-05	3.57E-04	2.66E-04	6.91E-04	5.70E-05	3.41E-05	1.11E-05	1.11E-05	2.31E-04
GI TRACT S WALL	G	3.86E-04	5.87E-05	6.71E-03	4.49E-04	4.68E-04	2.18E-04	4.34E-04	2.53E-04	2.47E-04	2.47E-04	1.84E-04
	B	0.0	0.0	4.57E-03	0.0	0.0	0.0	0.0	0.0	0.0	0.0	0.0
	T	3.86E-04	5.87E-05	1.13E-02	4.49E-04	4.68E-04	2.18E-04	4.34E-04	2.53E-04	2.47E-04	2.47E-04	1.84E-04
SI+CONT	G	1.25E-04	3.48E-04	3.36E-04	3.94E-03	2.07E-03	1.15E-03	3.60E-04	2.07E-04	4.00E-05	4.00E-05	2.01E-04
	B	0.0	0.0	0.0	2.85E-03	0.0	0.0	0.0	0.0	0.0	0.0	0.0
	T	1.25E-04	3.48E-04	3.36E-04	6.79E-03	2.07E-03	1.15E-03	3.60E-04	2.07E-04	4.00E-05	4.00E-05	2.01E-04
ULI WALL	G	1.44E-04	2.78E-04	4.07E-04	2.93E-03	5.58E-03	5.26E-04	3.72E-04	3.22E-04	5.28E-05	5.28E-05	2.13E-04
	B	0.0	0.0	0.0	0.0	5.19E-03	0.0	0.0	0.0	0.0	0.0	0.0
	T	1.44E-04	2.78E-04	4.07E-04	2.93E-03	1.08E-02	5.26E-04	3.72E-04	3.22E-04	5.28E-05	5.28E-05	2.13E-04
LLI WALL	G	3.92E-05	8.81E-04	1.74E-04	8.79E-04	4.13E-04	6.61E-03	1.14E-04	3.90E-05	1.16E-05	1.16E-05	2.20E-04
	B	0.0	0.0	0.0	0.0	0.0	8.45E-03	0.0	0.0	0.0	0.0	0.0
	T	3.92E-05	8.81E-04	1.74E-04	8.79E-04	4.13E-04	1.51E-02	1.14E-04	3.90E-05	1.16E-05	1.16E-05	2.20E-04
KIDNEYS	G	1.47E-03	4.86E-05	4.27E-04	4.13E-04	3.66E-04	1.16E-04	9.32E-03	4.82E-04	1.33E-04	1.33E-04	1.88E-04
	B	0.0	0.0	0.0	0.0	0.0	0.0	7.36E-03	0.0	0.0	0.0	0.0
	T	1.47E-03	4.86E-05	4.27E-04	4.13E-04	3.66E-04	1.16E-04	1.67E-02	4.82E-04	1.33E-04	1.33E-04	1.88E-04
LIVER	G	6.20E-04	3.90E-05	2.60E-04	2.40E-04	3.23E-04	4.87E-05	5.06E-04	3.29E-03	3.10E-04	3.10E-04	1.47E-04
	B	0.0	0.0	0.0	0.0	0.0	0.0	0.0	1.27E-03	0.0	0.0	0.0
	T	6.20E-04	3.90E-05	2.60E-04	2.40E-04	3.23E-04	4.87E-05	5.06E-04	4.56E-03	3.10E-04	3.10E-04	1.47E-04
LUNGS	G	3.06E-04	8.89E-06	2.36E-04	4.54E-05	5.02E-05	1.78E-05	1.28E-04	3.15E-04	1.86E-03	1.86E-03	1.74E-04
	B	0.0	0.0	0.0	0.0	0.0	0.0	0.0	0.0	2.28E-03	2.28E-03	0.0
	T	3.06E-04	8.89E-06	2.36E-04	4.54E-05	5.02E-05	1.78E-05	1.28E-04	3.15E-04	4.14E-03	4.14E-03	1.74E-04
RESP LYM NODE	G	3.06E-04	8.89E-06	2.36E-04	4.54E-05	5.02E-05	1.78E-05	1.28E-04	3.15E-04	1.86E-03	1.86E-03	1.74E-04
	B	0.0	0.0	0.0	0.0	0.0	0.0	0.0	0.0	2.28E-03	1.52E-01	0.0
	T	3.06E-04	8.89E-06	2.36E-04	4.54E-05	5.02E-05	1.78E-05	1.28E-04	3.15E-04	4.14E-03	1.54E-01	1.74E-04
MUSCLE*	G	2.00E-04	2.31E-04	1.84E-04	2.01E-04	1.93E-04	2.20E-04	1.88E-04	1.47E-04	1.74E-04	1.74E-04	1.99E-04
	B	0.0	0.0	0.0	0.0	0.0	0.0	0.0	0.0	0.0	0.0	8.15E-05
	T	2.00E-04	2.31E-04	1.84E-04	2.01E-04	1.93E-04	2.20E-04	1.88E-04	1.47E-04	1.74E-04	1.74E-04	2.81E-04
OVARIES	G	7.20E-05	6.78E-04	1.36E-04	1.25E-03	1.28E-03	2.13E-03	1.85E-04	6.35E-05	2.16E-05	2.16E-05	2.58E-04
	B	0.0	0.0	0.0	0.0	0.0	0.0	0.0	0.0	0.0	0.0	0.0
	T	7.20E-05	6.78E-04	1.36E-04	1.25E-03	1.28E-03	2.13E-03	1.85E-04	6.35E-05	2.16E-05	2.16E-05	2.58E-04

41-NIOBIUM-95 CONTINUED

SOURCE ORGANS

TARGET ORGANS		ADRENALS	BLAD CON	S CONT	SI+CONT	ULI CONT	LLI CONT	KIDNEYS	LIVER	LUNG	RESP LYM NODE	MUSCLE*
PANCREAS	G	1.11E-03	3.71E-05	2.19E-03	2.67E-04	2.54E-04	9.76E-05	8.77E-04	5.85E-04	3.24E-04	3.24E-04	2.32E-04
	B	0.0	0.0	0.0	0.0	0.0	0.0	0.0	0.0	0.0	0.0	0.0
	T	1.11E-03	3.71E-05	2.19E-03	2.67E-04	2.54E-04	9.76E-05	8.77E-04	5.85E-04	3.24E-04	3.24E-04	2.32E-04
SKELETON BONE	G	1.77E-04	7.40E-05	7.73E-05	1.02E-04	9.15E-05	1.33E-04	1.26E-04	9.40E-05	1.29E-04	1.29E-04	1.46E-04
	B	0.0	0.0	0.0	0.0	0.0	0.0	0.0	0.0	0.0	0.0	0.0
	T	1.77E-04	7.40E-05	7.73E-05	1.02E-04	9.15E-05	1.33E-04	1.26E-04	9.40E-05	1.29E-04	1.29E-04	1.46E-04
R MARROW	G	3.14E-04	1.57E-04	1.32E-04	3.18E-04	2.69E-04	3.97E-04	3.18E-04	1.35E-04	1.63E-04	1.63E-04	1.75E-04
	B	0.0	0.0	0.0	0.0	0.0	0.0	0.0	0.0	0.0	0.0	0.0
	T	3.14E-04	1.57E-04	1.32E-04	3.18E-04	2.69E-04	3.97E-04	3.18E-04	1.35E-04	1.63E-04	1.63E-04	1.75E-04
Y MARROW	G	1.71E-04	6.82E-05	1.07E-04	1.41E-04	1.30E-04	1.64E-04	1.57E-04	1.39E-04	1.36E-04	1.36E-04	1.43E-04
	B	0.0	0.0	0.0	0.0	0.0	0.0	0.0	0.0	0.0	0.0	0.0
	T	1.71E-04	6.82E-05	1.07E-04	1.41E-04	1.30E-04	1.64E-04	1.57E-04	1.39E-04	1.36E-04	1.36E-04	1.43E-04
T E CL	G	1.77E-04	7.40E-05	7.73E-05	1.02E-04	9.15E-05	1.33E-04	1.26E-04	9.40E-05	1.29E-04	1.29E-04	1.46E-04
	B	0.0	0.0	0.0	0.0	0.0	0.0	0.0	0.0	0.0	0.0	0.0
	T	1.77E-04	7.40E-05	7.73E-05	1.02E-04	9.15E-05	1.33E-04	1.26E-04	9.40E-05	1.29E-04	1.29E-04	1.46E-04
SKIN	G	9.36E-05	8.98E-05	8.03E-05	7.36E-05	7.39E-05	7.96E-05	8.83E-05	8.12E-05	9.07E-05	9.07E-05	1.23E-04
	B	0.0	0.0	0.0	0.0	0.0	0.0	0.0	0.0	0.0	0.0	0.0
	T	9.36E-05	8.98E-05	8.03E-05	7.36E-05	7.39E-05	7.96E-05	8.83E-05	8.12E-05	9.07E-05	9.07E-05	1.23E-04
SPLEEN	G	8.11E-04	3.21E-05	1.23E-03	2.04E-04	1.71E-04	1.33E-04	1.08E-03	1.42E-04	2.83E-04	2.83E-04	1.92E-04
	B	0.0	0.0	0.0	0.0	0.0	0.0	0.0	0.0	0.0	0.0	0.0
	T	8.11E-04	3.21E-05	1.23E-03	2.04E-04	1.71E-04	1.33E-04	1.08E-03	1.42E-04	2.83E-04	2.83E-04	1.92E-04
TESTES	G	1.07E-05	6.47E-04	1.33E-05	5.99E-05	7.23E-05	2.32E-04	2.14E-05	2.53E-05	4.06E-06	4.06E-06	1.63E-04
	B	0.0	0.0	0.0	0.0	0.0	0.0	0.0	0.0	0.0	0.0	0.0
	T	1.07E-05	6.47E-04	1.33E-05	5.99E-05	7.23E-05	2.32E-04	2.14E-05	2.53E-05	4.06E-06	4.06E-06	1.63E-04
THYMUS	G	1.02E-04	5.20E-06	7.37E-05	2.00E-05	2.17E-05	8.89E-06	3.15E-05	1.38E-04	5.14E-04	5.14E-04	1.96E-04
	B	0.0	0.0	0.0	0.0	0.0	0.0	0.0	0.0	0.0	0.0	0.0
	T	1.02E-04	5.20E-06	7.37E-05	2.00E-05	2.17E-05	8.89E-06	3.15E-05	1.38E-04	5.14E-04	5.14E-04	1.96E-04
THYROID	G	2.77E-05	1.78E-06	2.17E-05	6.36E-06	6.76E-06	3.08E-06	1.40E-05	2.57E-05	1.73E-04	1.73E-04	1.80E-04
	B	0.0	0.0	0.0	0.0	0.0	0.0	0.0	0.0	0.0	0.0	0.0
	T	2.77E-05	1.78E-06	2.17E-05	6.36E-06	6.76E-06	3.08E-06	1.40E-05	2.57E-05	1.73E-04	1.73E-04	1.80E-04
UTERUS	G	5.90E-05	1.91E-03	1.23E-04	1.11E-03	5.98E-04	7.22E-04	1.10E-04	5.44E-05	1.44E-05	1.44E-05	3.03E-04
	B	0.0	0.0	0.0	0.0	0.0	0.0	0.0	0.0	0.0	0.0	0.0
	T	5.90E-05	1.91E-03	1.23E-04	1.11E-03	5.98E-04	7.22E-04	1.10E-04	5.44E-05	1.44E-05	1.44E-05	3.03E-04
T BODY	G	2.19E-04	2.42E-04	2.31E-04	2.53E-04	2.48E-04	2.46E-04	2.21E-04	2.21E-04	1.88E-04	1.88E-04	1.90E-04
	B	3.26E-05	3.67E-06	9.78E-06	2.61E-05	1.56E-05	1.93E-05	3.26E-05	3.26E-05	3.26E-05	3.26E-05	3.26E-05
	T	2.52E-04	2.46E-04	2.41E-04	2.79E-04	2.64E-04	2.65E-04	2.53E-04	2.54E-04	2.21E-04	2.21E-04	2.22E-04

CONTINUED NEXT PAGE

41-NIOBIUM-95 CONTINUED

SOURCE ORGANS

TARGET ORGANS		OVARIES	PANCREAS	COR BONE	CAN BONE	R MARROW	Y MARROW	SKIN	SPLEEN	TESTES	THYROID	T BODY
ADRENALS	G	7.69E-05	9.75E-04	2.36E-04	2.36E-04	3.16E-04	1.02E-04	9.92E-05	8.67E-04	1.07E-05	2.77E-05	2.64E-04
	B	0.0	0.0	0.0	0.0	0.0	0.0	0.0	0.0	0.0	0.0	3.26E-05
	T	7.69E-05	9.75E-04	2.36E-04	2.36E-04	3.16E-04	1.02E-04	9.92E-05	8.67E-04	1.07E-05	2.77E-05	2.97E-04
BLAD WALL	G	8.93E-04	2.09E-05	7.04E-05	7.04E-05	1.21E-04	3.82E-05	9.45E-05	3.42E-05	6.81E-04	1.79E-06	2.55E-04
	B	0.0	0.0	0.0	0.0	0.0	0.0	0.0	0.0	0.0	0.0	3.26E-05
	T	8.93E-04	2.09E-05	7.04E-05	7.04E-05	1.21E-04	3.82E-05	9.45E-05	3.42E-05	6.81E-04	1.79E-06	2.87E-04
GI TRACT S WALL	G	1.05E-04	2.19E-03	7.37E-05	7.37E-05	1.45E-04	9.93E-05	8.73E-05	1.23E-03	1.31E-05	1.77E-05	2.26E-04
	B	0.0	0.0	0.0	0.0	0.0	0.0	0.0	0.0	0.0	0.0	3.26E-05
	T	1.05E-04	2.19E-03	7.37E-05	7.37E-05	1.45E-04	9.93E-05	8.73E-05	1.23E-03	1.31E-05	1.77E-05	2.59E-04
SI+CONT	G	1.49E-03	2.33E-04	1.09E-04	1.09E-04	3.44E-04	1.36E-04	7.65E-05	1.82E-04	7.08E-05	3.30E-06	2.56E-04
	B	0.0	0.0	0.0	0.0	0.0	0.0	0.0	0.0	0.0	0.0	3.26E-05
	T	1.49E-03	2.33E-04	1.09E-04	1.09E-04	3.44E-04	1.36E-04	7.65E-05	1.82E-04	7.08E-05	3.30E-06	2.88E-04
ULI WALL	G	1.40E-03	2.85E-04	9.82E-05	9.82E-05	2.56E-04	1.12E-04	8.33E-05	1.83E-04	4.92E-05	3.80E-06	2.48E-04
	B	0.0	0.0	0.0	0.0	0.0	0.0	0.0	0.0	0.0	0.0	3.26E-05
	T	1.40E-03	2.85E-04	9.82E-05	9.82E-05	2.56E-04	1.12E-04	8.33E-05	1.83E-04	4.92E-05	3.80E-06	2.81E-04
LLI WALL	G	1.78E-03	7.21E-05	1.34E-04	1.34E-04	3.94E-04	1.07E-04	8.47E-05	8.69E-05	3.30E-04	2.63E-06	2.57E-04
	B	0.0	0.0	0.0	0.0	0.0	0.0	0.0	0.0	0.0	0.0	3.26E-05
	T	1.78E-03	7.21E-05	1.34E-04	1.34E-04	3.94E-04	1.07E-04	8.47E-05	8.69E-05	3.30E-04	2.63E-06	2.90E-04
KIDNEYS	G	1.47E-04	7.94E-04	1.41E-04	1.41E-04	3.09E-04	1.57E-04	1.01E-04	1.07E-03	1.70E-05	1.16E-05	2.34E-04
	B	0.0	0.0	0.0	0.0	0.0	0.0	0.0	0.0	0.0	0.0	3.26E-05
	T	1.47E-04	7.94E-04	1.41E-04	1.41E-04	3.09E-04	1.57E-04	1.01E-04	1.07E-03	1.70E-05	1.16E-05	2.66E-04
LIVER	G	8.37E-05	5.26E-04	9.46E-05	9.46E-05	1.32E-04	1.45E-04	8.95E-05	1.41E-04	1.07E-05	2.36E-05	2.33E-04
	B	0.0	0.0	0.0	0.0	0.0	0.0	0.0	0.0	0.0	0.0	3.26E-05
	T	8.37E-05	5.26E-04	9.46E-05	9.46E-05	1.32E-04	1.45E-04	8.95E-05	1.41E-04	1.07E-05	2.36E-05	2.65E-04
LUNGS	G	1.83E-05	3.05E-04	1.30E-04	1.30E-04	1.59E-04	1.33E-04	9.21E-05	2.81E-04	2.99E-06	1.47E-04	1.93E-04
	B	0.0	0.0	0.0	0.0	0.0	0.0	0.0	0.0	0.0	0.0	3.26E-05
	T	1.83E-05	3.05E-04	1.30E-04	1.30E-04	1.59E-04	1.33E-04	9.21E-05	2.81E-04	2.99E-06	1.47E-04	2.26E-04
RESP LYM NODE	G	1.83E-05	3.05E-04	1.30E-04	1.30E-04	1.59E-04	1.33E-04	9.21E-05	2.81E-04	2.99E-06	1.47E-04	1.93E-04
	B	0.0	0.0	0.0	0.0	0.0	0.0	0.0	0.0	0.0	0.0	3.26E-05
	T	1.83E-05	3.05E-04	1.30E-04	1.30E-04	1.59E-04	1.33E-04	9.21E-05	2.81E-04	2.99E-06	1.47E-04	2.26E-04
MUSCLE*	G	2.58E-04	2.32E-04	1.46E-04	1.46E-04	1.72E-04	1.36E-04	1.23E-04	1.92E-04	1.63E-04	1.80E-04	1.90E-04
	B	0.0	0.0	0.0	0.0	0.0	0.0	0.0	0.0	0.0	0.0	3.26E-05
	T	2.58E-04	2.32E-04	1.46E-04	1.46E-04	1.72E-04	1.36E-04	1.23E-04	1.92E-04	1.63E-04	1.80E-04	2.22E-04
OVARIES	G	9.82E-02	9.60E-05	1.34E-04	1.34E-04	4.03E-04	1.17E-04	6.25E-05	1.03E-04	7.81E-50	3.13E-06	1.94E-04
	B	2.08E-01	0.0	0.0	0.0	0.0	0.0	0.0	0.0	0.0	0.0	3.26E-05
	T	3.06E-01	9.60E-05	1.34E-04	1.34E-04	4.03E-04	1.17E-04	6.25E-05	1.03E-04	7.81E-50	3.13E-06	2.27E-04

41-NIOBIUM-95 CONTINUED

TARGET ORGANS		SOURCE ORGANS										
		OVARIES	PANCREAS	COR BONE	CAN BONE	R MARROW	Y MARROW	SKIN	SPLEEN	TESTES	THYROID	T BODY
PANCREAS	G	1.01E-04	2.73E-02	1.25E-04	1.25E-04	1.85E-04	1.51E-04	7.08E-05	2.43E-03	9.82E-06	8.19E-06	2.19E-04
	B	0.0	2.28E-02	0.0	0.0	0.0	0.0	0.0	0.0	0.0	0.0	3.26E-05
	T	1.01E-04	5.02E-02	1.25E-04	1.25E-04	1.85E-04	1.51E-04	7.08E-05	2.43E-03	9.82E-06	8.19E-06	2.52E-04
SKELETON BONE	G	1.18E-04	1.17E-04	4.49E-04	4.49E-04	2.99E-04	3.33E-04	1.13E-04	1.00E-04	8.64E-05	9.74E-05	1.92E-04
	B	0.0	0.0	4.57E-04	4.17E-04	2.64E-05	0.0	0.0	0.0	0.0	0.0	3.26E-05
	T	1.18E-04	1.17E-04	9.05E-04	8.66E-04	3.25E-04	3.33E-04	1.13E-04	1.00E-04	8.64E-05	9.74E-05	2.24E-04
R MARROW	G	3.88E-04	2.20E-04	4.03E-04	4.03E-04	9.51E-04	3.45E-04	1.05E-04	1.47E-04	6.83E-05	1.06E-04	2.11E-04
	B	0.0	0.0	1.64E-06	1.32E-04	1.43E-03	0.0	0.0	0.0	0.0	0.0	3.26E-05
	T	3.88E-04	2.20E-04	4.05E-04	5.35E-04	2.38E-03	3.45E-04	1.05E-04	1.47E-04	6.83E-05	1.06E-04	2.44E-04
Y MARROW	G	1.57E-04	1.38E-04	3.88E-04	3.88E-04	3.69E-04	5.65E-04	1.19E-04	1.49E-04	3.74E-05	5.22E-05	1.80E-04
	B	0.0	0.0	0.0	0.0	0.0	1.52E-03	0.0	0.0	0.0	0.0	3.26E-05
	T	1.57E-04	1.38E-04	3.88E-04	3.88E-04	3.69E-04	2.09E-03	1.19E-04	1.49E-04	3.74E-05	5.22E-05	2.12E-04
T E CL	G	1.18E-04	1.17E-04	4.49E-04	4.49E-04	4.02E-04	3.68E-04	1.13E-04	1.00E-04	8.64E-05	9.74E-05	1.92E-04
	B	0.0	0.0	1.99E-04	4.12E-04	4.86E-04	3.80E-04	0.0	0.0	0.0	0.0	3.26E-05
	T	1.18E-04	1.17E-04	6.48E-04	8.61E-04	8.88E-04	7.48E-04	1.13E-04	1.00E-04	8.64E-05	9.74E-05	2.24E-04
SKIN	G	7.26E-05	7.13E-05	1.14E-04	1.14E-04	9.92E-05	1.28E-04	2.71E-04	8.49E-05	2.07E-04	1.18E-04	1.22E-04
	B	0.0	0.0	0.0	0.0	0.0	0.0	8.78E-04	0.0	0.0	0.0	3.26E-05
	T	7.26E-05	7.13E-05	1.14E-04	1.14E-04	9.92E-05	1.28E-04	1.15E-03	8.49E-05	2.07E-04	1.18E-04	1.55E-04
SPLEEN	G	8.65E-05	2.41E-03	1.15E-04	1.15E-04	1.25E-04	1.39E-04	9.71E-05	1.67E-02	1.28E-05	2.30E-05	2.32E-04
	B	0.0	0.0	0.0	0.0	0.0	0.0	0.0	1.27E-02	0.0	0.0	3.26E-05
	T	8.65E-05	2.41E-03	1.15E-04	1.15E-04	1.25E-04	1.39E-04	9.71E-05	2.94E-02	1.28E-05	2.30E-05	2.64E-04
TESTES	G	7.81E-50	1.28E-05	8.26E-05	8.26E-05	5.76E-05	1.24E-04	1.17E-04	1.41E-05	4.65E-02	7.23E-07	2.37E-04
	B	0.0	0.0	0.0	0.0	0.0	0.0	0.0	0.0	6.52E-02	0.0	3.26E-05
	T	7.81E-50	1.28E-05	8.26E-05	8.26E-05	5.76E-05	1.24E-04	1.17E-04	1.41E-05	1.12E-01	7.23E-07	2.70E-04
THYMUS	G	9.37E-06	6.99E-05	1.07E-04	1.07E-04	7.49E-05	5.24E-05	1.05E-04	8.03E-05	2.03E-06	5.34E-04	1.81E-04
	B	0.0	0.0	0.0	0.0	0.0	0.0	0.0	0.0	0.0	0.0	3.26E-05
	T	9.37E-06	6.99E-05	1.07E-04	1.07E-04	7.49E-05	5.24E-05	1.05E-04	8.03E-05	2.03E-06	5.34E-04	2.13E-04
THYROID	G	3.13E-06	1.38E-05	1.04E-04	1.04E-04	1.24E-04	6.37E-05	1.03E-04	2.11E-05	7.24E-07	6.24E-02	1.99E-04
	B	0.0	0.0	0.0	0.0	0.0	0.0	0.0	0.0	0.0	1.14E-01	3.26E-05
	T	3.13E-06	1.38E-05	1.04E-04	1.04E-04	1.24E-04	6.37E-05	1.03E-04	2.11E-05	7.24E-07	1.77E-01	2.32E-04
UTERUS	G	2.24E-03	8.13E-05	1.01E-04	1.01E-04	2.28E-04	8.91E-05	8.93E-05	7.31E-05	7.81E-50	2.98E-06	2.76E-04
	B	0.0	0.0	0.0	0.0	0.0	0.0	0.0	0.0	0.0	0.0	3.26E-05
	T	2.24E-03	8.13E-05	1.01E-04	1.01E-04	2.28E-04	8.91E-05	8.93E-05	7.31E-05	7.81E-50	2.98E-06	3.08E-04
T BODY	G	2.58E-04	2.52E-04	1.88E-04	1.88E-04	2.08E-04	1.68E-04	1.23E-04	2.20E-04	1.87E-04	1.71E-04	1.89E-04
	B	3.26E-05	3.26E-05	3.26E-05	3.26E-05	3.26E-05	3.26E-05	3.26E-05	3.26E-05	3.26E-05	3.26E-05	3.26E-05
	T	2.91E-04	2.85E-04	2.20E-04	2.20E-04	2.40E-04	2.01E-04	1.56E-04	2.52E-04	2.20E-04	2.03E-04	2.22E-04

*"MUSCLE" VALUES MAY BE USED FOR "SEPARABLE FAT" WITH ADJUSTMENT (SEE TEXT)
PRINCIPLE REFERENCE-BROMAN, L. AND BOREVING, S., ARKIV FOR FYSIK, 34, 259 (1967)
DATE DECAY DATA REVIEWED-JULY 1969

S, AVERAGE DOSE EQUIVALENT PER UNIT ACCUMULATED ACTIVITY (REM/UCI-DAY), FOR 41-NIOBIUM-97M (TR=1.000E 00 MIN)

DATE OF TABLE 11-27-74

TARGET ORGANS		SOURCE ORGANS										
		ADRENALS	BLAD CON	S CONT	SI+CONT	ULI CONT	LLI CONT	KIDNEYS	LIVER	LUNG	RESP LYM NODE	MUSCLE*
ADRENALS	G	5.79E-02	3.05E-05	2.67E-04	1.52E-04	1.42E-04	6.24E-05	1.55E-03	6.06E-04	3.01E-04	3.01E-04	1.92E-04
	B	4.80E-02	0.0	0.0	0.0	0.0	0.0	0.0	0.0	0.0	0.0	0.0
	T	1.06E-01	3.05E-05	2.67E-04	1.52E-04	1.42E-04	6.24E-05	1.55E-03	6.06E-04	3.01E-04	3.01E-04	1.92E-04
BLAD WALL	G	2.28E-05	8.96E-03	6.03E-05	3.49E-04	2.53E-04	6.65E-04	5.41E-05	3.37E-05	1.05E-05	1.05E-05	2.21E-04
	B	0.0	1.68E-03	0.0	0.0	0.0	0.0	0.0	0.0	0.0	0.0	0.0
	T	2.28E-05	1.06E-02	6.03E-05	3.49E-04	2.53E-04	6.65E-04	5.41E-05	3.37E-05	1.05E-05	1.05E-05	2.21E-04
GI TRACT S WALL	G	3.70E-04	5.48E-05	6.44E-03	4.29E-04	4.49E-04	2.10E-04	4.16E-04	2.42E-04	2.36E-04	2.36E-04	1.76E-04
	B	0.0	0.0	1.34E-03	0.0	0.0	0.0	0.0	0.0	0.0	0.0	0.0
	T	3.70E-04	5.48E-05	7.78E-03	4.29E-04	4.49E-04	2.10E-04	4.16E-04	2.42E-04	2.36E-04	2.36E-04	1.76E-04
SI+CONT	G	1.20E-04	3.32E-04	3.22E-04	3.79E-03	1.99E-03	1.10E-03	3.44E-04	1.98E-04	3.80E-05	3.80E-05	1.93E-04
	B	0.0	0.0	0.0	8.40E-04	0.0	0.0	0.0	0.0	0.0	0.0	0.0
	T	1.20E-04	3.32E-04	3.22E-04	4.63E-03	1.99E-03	1.10E-03	3.44E-04	1.98E-04	3.80E-05	3.80E-05	1.93E-04
ULI WALL	G	1.37E-04	2.69E-04	3.92E-04	2.81E-03	5.35E-03	5.06E-04	3.57E-04	3.10E-04	5.04E-05	5.04E-05	2.04E-04
	B	0.0	0.0	0.0	0.0	1.53E-03	0.0	0.0	0.0	0.0	0.0	0.0
	T	1.37E-04	2.69E-04	3.92E-04	2.81E-03	6.88E-03	5.06E-04	3.57E-04	3.10E-04	5.04E-05	5.04E-05	2.04E-04
LLI WALL	G	3.82E-05	8.47E-04	1.66E-04	8.42E-04	3.94E-04	6.35E-03	1.10E-04	3.76E-05	1.10E-05	1.10E-05	2.11E-04
	B	0.0	0.0	0.0	0.0	0.0	2.49E-03	0.0	0.0	0.0	0.0	0.0
	T	3.82E-05	8.47E-04	1.66E-04	8.42E-04	3.94E-04	8.84E-03	1.10E-04	3.76E-05	1.10E-05	1.10E-05	2.11E-04
KIDNEYS	G	1.41E-03	4.68E-05	4.09E-04	3.96E-04	3.49E-04	1.10E-04	8.97E-03	4.63E-04	1.28E-04	1.28E-04	1.80E-04
	B	0.0	0.0	0.0	0.0	0.0	0.0	2.17E-03	0.0	0.0	0.0	0.0
	T	1.41E-03	4.68E-05	4.09E-04	3.96E-04	3.49E-04	1.10E-04	1.11E-02	4.63E-04	1.28E-04	1.28E-04	1.80E-04
LIVER	G	5.96E-04	3.72E-05	2.50E-04	2.30E-04	3.09E-04	4.64E-05	4.86E-04	3.17E-03	2.97E-04	2.97E-04	1.41E-04
	B	0.0	0.0	0.0	0.0	0.0	0.0	0.0	3.73E-04	0.0	0.0	0.0
	T	5.96E-04	3.72E-05	2.50E-04	2.30E-04	3.09E-04	4.64E-05	4.86E-04	3.54E-03	2.97E-04	2.97E-04	1.41E-04
LUNGS	G	2.93E-04	8.31E-06	2.27E-04	4.34E-05	4.76E-05	1.67E-05	1.23E-04	3.01E-04	1.79E-03	1.79E-03	1.67E-04
	B	0.0	0.0	0.0	0.0	0.0	0.0	0.0	0.0	6.72E-04	6.72E-04	0.0
	T	2.93E-04	8.31E-06	2.27E-04	4.34E-05	4.76E-05	1.67E-05	1.23E-04	3.01E-04	2.46E-03	2.46E-03	1.67E-04
RESP LYM NODE	G	2.93E-04	8.31E-06	2.27E-04	4.34E-05	4.76E-05	1.67E-05	1.23E-04	3.01E-04	1.79E-03	1.79E-03	1.67E-04
	B	0.0	0.0	0.0	0.0	0.0	0.0	0.0	0.0	6.67E-04	4.48E-02	0.0
	T	2.93E-04	8.31E-06	2.27E-04	4.34E-05	4.76E-05	1.67E-05	1.23E-04	3.01E-04	2.46E-03	4.66E-02	1.67E-04
MUSCLE*	G	1.92E-04	2.21E-04	1.76E-04	1.93E-04	1.85E-04	2.11E-04	1.80E-04	1.41E-04	1.67E-04	1.67E-04	1.91E-04
	B	0.0	0.0	0.0	0.0	0.0	0.0	0.0	0.0	0.0	0.0	2.40E-05
	T	1.92E-04	2.21E-04	1.76E-04	1.93E-04	1.85E-04	2.11E-04	1.80E-04	1.41E-04	1.67E-04	1.67E-04	2.15E-04
OVARIES	G	6.90E-05	6.62E-04	1.25E-04	1.19E-03	1.26E-03	2.04E-03	1.74E-04	5.77E-05	2.05E-05	2.05E-05	2.48E-04
	B	0.0	0.0	0.0	0.0	0.0	0.0	0.0	0.0	0.0	0.0	0.0
	T	6.90E-05	6.62E-04	1.25E-04	1.19E-03	1.26E-03	2.04E-03	1.74E-04	5.77E-05	2.05E-05	2.05E-05	2.48E-04

41-NIOBIUM-97M CONTINUED

SOURCE ORGANS

TARGET ORGANS		ADRENALS	BLAD CON	S CONT	SI+CONT	ULI CONT	LLI CONT	KIDNEYS	LIVER	LUNG	RESP LYM NODE	MUSCLE*
PANCREAS	G	1.07E-03	3.53E-05	2.10E-03	2.56E-04	2.41E-04	9.35E-05	8.38E-04	5.64E-04	3.14E-04	3.14E-04	2.23E-04
	B	0.0	0.0	0.0	0.0	0.0	0.0	0.0	0.0	0.0	0.0	0.0
	T	1.07E-03	3.53E-05	2.10E-03	2.56E-04	2.41E-04	9.35E-05	8.38E-04	5.64E-04	3.14E-04	3.14E-04	2.23E-04
SKELETON BONE	G	1.69E-04	7.12E-05	7.42E-05	9.77E-05	8.80E-05	1.28E-04	1.21E-04	9.02E-05	1.24E-04	1.24E-04	1.40E-04
	B	0.0	0.0	0.0	0.0	0.0	0.0	0.0	0.0	0.0	0.0	0.0
	T	1.69E-04	7.12E-05	7.42E-05	9.77E-05	8.80E-05	1.28E-04	1.21E-04	9.02E-05	1.24E-04	1.24E-04	1.40E-04
R MARROW	G	3.02E-04	1.51E-04	1.27E-04	3.06E-04	2.59E-04	3.81E-04	3.06E-04	1.30E-04	1.56E-04	1.56E-04	1.68E-04
	B	0.0	0.0	0.0	0.0	0.0	0.0	0.0	0.0	0.0	0.0	0.0
	T	3.02E-04	1.51E-04	1.27E-04	3.06E-04	2.59E-04	3.81E-04	3.06E-04	1.30E-04	1.56E-04	1.56E-04	1.68E-04
Y MARROW	G	1.64E-04	6.56E-05	1.03E-04	1.35E-04	1.25E-04	1.57E-04	1.51E-04	1.33E-04	1.31E-04	1.31E-04	1.38E-04
	B	0.0	0.0	0.0	0.0	0.0	0.0	0.0	0.0	0.0	0.0	0.0
	T	1.64E-04	6.56E-05	1.03E-04	1.35E-04	1.25E-04	1.57E-04	1.51E-04	1.33E-04	1.31E-04	1.31E-04	1.38E-04
T E CL	G	1.69E-04	7.12E-05	7.42E-05	9.77E-05	8.80E-05	1.28E-04	1.21E-04	9.02E-05	1.24E-04	1.24E-04	1.40E-04
	B	0.0	0.0	0.0	0.0	0.0	0.0	0.0	0.0	0.0	0.0	0.0
	T	1.69E-04	7.12E-05	7.42E-05	9.77E-05	8.80E-05	1.28E-04	1.21E-04	9.02E-05	1.24E-04	1.24E-04	1.40E-04
SKIN	G	8.93E-05	8.56E-05	7.67E-05	7.02E-05	7.07E-05	7.61E-05	8.45E-05	7.76E-05	8.67E-05	8.67E-05	1.18E-04
	B	0.0	0.0	0.0	0.0	0.0	0.0	0.0	0.0	0.0	0.0	0.0
	T	8.93E-05	8.56E-05	7.67E-05	7.02E-05	7.07E-05	7.61E-05	8.45E-05	7.76E-05	8.67E-05	8.67E-05	1.18E-04
SPLEEN	G	7.80E-04	3.06E-05	1.18E-03	1.95E-04	1.63E-04	1.27E-04	1.04E-03	1.35E-04	2.71E-04	2.71E-04	1.84E-04
	B	0.0	0.0	0.0	0.0	0.0	0.0	0.0	0.0	0.0	0.0	0.0
	T	7.80E-04	3.06E-05	1.18E-03	1.95E-04	1.63E-04	1.27E-04	1.04E-03	1.35E-04	2.71E-04	2.71E-04	1.84E-04
TESTES	G	1.02E-05	6.21E-04	1.19E-05	5.64E-05	6.88E-05	2.25E-04	2.04E-05	2.34E-05	3.82E-06	3.82E-06	1.56E-04
	B	0.0	0.0	0.0	0.0	0.0	0.0	0.0	0.0	0.0	0.0	0.0
	T	1.02E-05	6.21E-04	1.19E-05	5.64E-05	6.88E-05	2.25E-04	2.04E-05	2.34E-05	3.82E-06	3.82E-06	1.56E-04
THYMUS	G	9.98E-05	4.90E-06	6.70E-05	1.90E-05	2.06E-05	8.41E-06	3.20E-05	1.35E-04	4.89E-04	4.89E-04	1.90E-04
	B	0.0	0.0	0.0	0.0	0.0	0.0	0.0	0.0	0.0	0.0	0.0
	T	9.98E-05	4.90E-06	6.70E-05	1.90E-05	2.06E-05	8.41E-06	3.20E-05	1.35E-04	4.89E-04	4.89E-04	1.90E-04
THYROID	G	2.64E-05	1.66E-06	2.06E-05	6.00E-06	6.38E-06	2.90E-06	1.33E-05	2.45E-05	1.64E-04	1.64E-04	1.72E-04
	B	0.0	0.0	0.0	0.0	0.0	0.0	0.0	0.0	0.0	0.0	0.0
	T	2.64E-05	1.66E-06	2.06E-05	6.00E-06	6.38E-06	2.90E-06	1.33E-05	2.45E-05	1.64E-04	1.64E-04	1.72E-04
UTERUS	G	5.57E-05	1.83E-03	1.17E-04	1.07E-03	5.71E-04	6.92E-04	1.05E-04	5.23E-05	1.37E-05	1.37E-05	2.86E-04
	B	0.0	0.0	0.0	0.0	0.0	0.0	0.0	0.0	0.0	0.0	0.0
	T	5.57E-05	1.83E-03	1.17E-04	1.07E-03	5.71E-04	6.92E-04	1.05E-04	5.23E-05	1.37E-05	1.37E-05	2.86E-04
T BODY	G	2.10E-04	2.32E-04	2.21E-04	2.43E-04	2.38E-04	2.36E-04	2.12E-04	2.12E-04	1.81E-04	1.81E-04	1.82E-04
	B	9.59E-06	1.08E-06	2.88E-06	7.68E-06	4.58E-06	5.69E-06	9.59E-06	9.59E-06	9.59E-06	9.59E-06	9.59E-06
	T	2.20E-04	2.33E-04	2.24E-04	2.51E-04	2.43E-04	2.42E-04	2.21E-04	2.22E-04	1.90E-04	1.90E-04	1.91E-04

CONTINUED NEXT PAGE

41-NIOBIUM-97M CONTINUED

SOURCE ORGANS

TARGET ORGANS		OVARIES	PANCREAS	COR BONE	CAN BONE	R MARROW	Y MARROW	SKIN	SPLEEN	TESTES	THYROID	T BODY
ADRENALS	G	7.40E-05	9.45E-04	2.25E-04	2.25E-04	2.95E-04	1.01E-04	9.40E-05	8.24E-04	1.02E-05	2.64E-05	2.56E-04
	B	0.0	0.0	0.0	0.0	0.0	0.0	0.0	0.0	0.0	0.0	9.59E-06
	T	7.40E-05	9.45E-04	2.25E-04	2.25E-04	2.95E-04	1.01E-04	9.40E-05	8.24E-04	1.02E-05	2.64E-05	2.66E-04
BLAD WALL	G	8.54E-04	2.04E-05	6.87E-05	6.87E-05	1.13E-04	3.62E-05	8.95E-05	3.14E-05	6.51E-04	1.67E-06	2.43E-04
	B	0.0	0.0	0.0	0.0	0.0	0.0	0.0	0.0	0.0	0.0	9.59E-06
	T	8.54E-04	2.04E-05	6.87E-05	6.87E-05	1.13E-04	3.62E-05	8.95E-05	3.14E-05	6.51E-04	1.67E-06	2.52E-04
GI TRACT S WALL	G	1.01E-04	2.10E-03	7.08E-05	7.08E-05	1.38E-04	9.49E-05	8.34E-05	1.18E-03	1.27E-05	1.69E-05	2.17E-04
	B	0.0	0.0	0.0	0.0	0.0	0.0	0.0	0.0	0.0	0.0	9.59E-06
	T	1.01E-04	2.10E-03	7.08E-05	7.08E-05	1.38E-04	9.49E-05	8.34E-05	1.18E-03	1.27E-05	1.69E-05	2.27E-04
SI+CONT	G	1.43E-03	2.23E-04	1.04E-04	1.04E-04	3.30E-04	1.30E-04	7.30E-05	1.74E-04	6.78E-05	2.97E-06	2.45E-04
	B	0.0	0.0	0.0	0.0	0.0	0.0	0.0	0.0	0.0	0.0	9.59E-06
	T	1.43E-03	2.23E-04	1.04E-04	1.04E-04	3.30E-04	1.30E-04	7.30E-05	1.74E-04	6.78E-05	2.97E-06	2.55E-04
ULI WALL	G	1.34E-03	2.73E-04	9.35E-05	9.35E-05	2.47E-04	1.08E-04	7.92E-05	1.75E-04	4.65E-05	3.44E-06	2.39E-04
	B	0.0	0.0	0.0	0.0	0.0	0.0	0.0	0.0	0.0	0.0	9.59E-06
	T	1.34E-03	2.73E-04	9.35E-05	9.35E-05	2.47E-04	1.08E-04	7.92E-05	1.75E-04	4.65E-05	3.44E-06	2.48E-04
LLI WALL	G	1.71E-03	6.89E-05	1.27E-04	1.27E-04	3.78E-04	1.02E-04	8.07E-05	8.36E-05	3.20E-04	2.47E-06	2.47E-04
	B	0.0	0.0	0.0	0.0	0.0	0.0	0.0	0.0	0.0	0.0	9.59E-06
	T	1.71E-03	6.89E-05	1.27E-04	1.27E-04	3.78E-04	1.02E-04	8.07E-05	8.36E-05	3.20E-04	2.47E-06	2.57E-04
KIDNEYS	G	1.41E-04	7.62E-04	1.33E-04	1.33E-04	2.96E-04	1.50E-04	9.68E-05	1.03E-03	1.59E-05	1.07E-05	2.24E-04
	B	0.0	0.0	0.0	0.0	0.0	0.0	0.0	0.0	0.0	0.0	9.59E-06
	T	1.41E-04	7.62E-04	1.33E-04	1.33E-04	2.96E-04	1.50E-04	9.68E-05	1.03E-03	1.59E-05	1.07E-05	2.33E-04
LIVER	G	7.99E-05	5.05E-04	9.05E-05	9.05E-05	1.27E-04	1.39E-04	8.57E-05	1.35E-04	9.95E-06	2.24E-05	2.22E-04
	B	0.0	0.0	0.0	0.0	0.0	0.0	0.0	0.0	0.0	0.0	9.59E-06
	T	7.99E-05	5.05E-04	9.05E-05	9.05E-05	1.27E-04	1.39E-04	8.57E-05	1.35E-04	9.95E-06	2.24E-05	2.32E-04
LUNGS	G	1.73E-05	2.92E-04	1.25E-04	1.25E-04	1.52E-04	1.28E-04	8.80E-05	2.70E-04	2.77E-06	1.40E-04	1.86E-04
	B	0.0	0.0	0.0	0.0	0.0	0.0	0.0	0.0	0.0	0.0	9.59E-06
	T	1.73E-05	2.92E-04	1.25E-04	1.25E-04	1.52E-04	1.28E-04	8.80E-05	2.70E-04	2.77E-06	1.40E-04	1.96E-04
RESP LYM NODE	G	1.73E-05	2.92E-04	1.25E-04	1.25E-04	1.52E-04	1.28E-04	8.80E-05	2.70E-04	2.77E-06	1.40E-04	1.86E-04
	B	0.0	0.0	0.0	0.0	0.0	0.0	0.0	0.0	0.0	0.0	9.59E-06
	T	1.73E-05	2.92E-04	1.25E-04	1.25E-04	1.52E-04	1.28E-04	8.80E-05	2.70E-04	2.77E-06	1.40E-04	1.96E-04
MUSCLE*	G	2.48E-04	2.23E-04	1.40E-04	1.40E-04	1.64E-04	1.30E-04	1.18E-04	1.84E-04	1.56E-04	1.72E-04	1.82E-04
	B	0.0	0.0	0.0	0.0	0.0	0.0	0.0	0.0	0.0	0.0	9.59E-06
	T	2.48E-04	2.23E-04	1.40E-04	1.40E-04	1.64E-04	1.30E-04	1.18E-04	1.84E-04	1.56E-04	1.72E-04	1.91E-04
OVARIES	G	9.46E-02	8.81E-05	1.29E-04	1.29E-04	3.92E-04	1.12E-04	5.79E-05	1.02E-04	8.90E-49	2.94E-06	1.88E-04
	B	6.11E-02	0.0	0.0	0.0	0.0	0.0	0.0	0.0	0.0	0.0	9.59E-06
	T	1.56E-01	8.81E-05	1.29E-04	1.29E-04	3.92E-04	1.12E-04	5.79E-05	1.02E-04	8.90E-49	2.94E-06	1.98E-04

41-NIOBIUM-97M CONTINUED

SOURCE ORGANS

TARGET ORGANS		OVARIES	PANCREAS	COR BONE	CAN BONE	R MARROW	Y MARROW	SKIN	SPLEEN	TESTES	THYROID	T BODY
PANCREAS	G	9.41E-05	2.63E-02	1.19E-04	1.19E-04	1.81E-04	1.47E-04	6.83E-05	2.34E-03	9.01E-06	7.90E-06	2.10E-04
	B	0.0	6.72E-03	0.0	0.0	0.0	0.0	0.0	0.0	0.0	0.0	9.59E-06
	T	9.41E-05	3.30E-02	1.19E-04	1.19E-04	1.81E-04	1.47E-04	6.83E-05	2.34E-03	9.01E-06	7.90E-06	2.20E-04
SKELETON BONE	G	1.13E-04	1.13E-04	4.31E-04	4.31E-04	2.87E-04	3.20E-04	1.08E-04	9.58E-05	8.28E-05	9.35E-05	1.84E-04
	B	0.0	0.0	1.34E-04	7.58E-05	3.90E-05	0.0	0.0	0.0	0.0	0.0	9.59E-06
	T	1.13E-04	1.13E-04	5.65E-04	5.07E-04	3.26E-04	3.20E-04	1.08E-04	9.58E-05	8.28E-05	9.35E-05	1.94E-04
R MARROW	G	3.73E-04	2.11E-04	3.87E-04	3.87E-04	9.15E-04	3.31E-04	1.00E-04	1.41E-04	6.55E-05	1.02E-04	2.03E-04
	B	0.0	0.0	9.09E-06	1.95E-04	3.18E-04	0.0	0.0	0.0	0.0	0.0	9.59E-06
	T	3.73E-04	2.11E-04	3.96E-04	5.82E-04	1.23E-03	3.31E-04	1.00E-04	1.41E-04	6.55E-05	1.02E-04	2.13E-04
Y MARROW	G	1.51E-04	1.33E-04	3.73E-04	3.73E-04	3.54E-04	5.43E-04	1.14E-04	1.43E-04	3.59E-05	5.00E-05	1.72E-04
	B	0.0	0.0	0.0	0.0	0.0	4.48E-04	0.0	0.0	0.0	0.0	9.59E-06
	T	1.51E-04	1.33E-04	3.73E-04	3.73E-04	3.54E-04	9.91E-04	1.14E-04	1.43E-04	3.59E-05	5.00E-05	1.82E-04
T E CL	G	1.13E-04	1.13E-04	4.31E-04	4.31E-04	3.87E-04	3.53E-04	1.08E-04	9.58E-05	8.28E-05	9.35E-05	1.84E-04
	B	0.0	0.0	8.50E-05	1.27E-04	1.39E-04	1.12E-04	0.0	0.0	0.0	0.0	9.59E-06
	T	1.13E-04	1.13E-04	5.16E-04	5.58E-04	5.26E-04	4.65E-04	1.08E-04	9.58E-05	8.28E-05	9.35E-05	1.94E-04
SKIN	G	6.93E-05	6.79E-05	1.10E-04	1.10E-04	9.50E-05	1.22E-04	2.60E-04	8.12E-05	1.99E-04	1.13E-04	1.16E-04
	B	0.0	0.0	0.0	0.0	0.0	0.0	2.58E-04	0.0	0.0	0.0	9.59E-06
	T	6.93E-05	6.79E-05	1.10E-04	1.10E-04	9.50E-05	1.22E-04	5.18E-04	8.12E-05	1.99E-04	1.13E-04	1.26E-04
SPLEEN	G	8.32E-05	2.31E-03	1.09E-04	1.09E-04	1.18E-04	1.32E-04	9.21E-05	1.61E-02	1.26E-05	2.15E-05	2.22E-04
	B	0.0	0.0	0.0	0.0	0.0	0.0	0.0	3.73E-03	0.0	0.0	9.59E-06
	T	8.32E-05	2.31E-03	1.09E-04	1.09E-04	1.18E-04	1.32E-04	9.21E-05	1.98E-02	1.26E-05	2.15E-05	2.32E-04
TESTES	G	8.90E-49	1.19E-05	7.85E-05	7.85E-05	5.51E-05	1.19E-04	1.11E-04	1.34E-05	4.47E-02	6.70E-07	2.28E-04
	B	0.0	0.0	0.0	0.0	0.0	0.0	0.0	0.0	1.92E-02	0.0	9.59E-06
	T	8.90E-49	1.19E-05	7.85E-05	7.85E-05	5.51E-05	1.19E-04	1.11E-04	1.34E-05	6.39E-02	6.70E-07	2.38E-04
THYMUS	G	8.87E-06	6.70E-05	1.02E-04	1.02E-04	7.04E-05	4.98E-05	1.01E-04	7.55E-05	1.90E-06	5.15E-04	1.75E-04
	B	0.0	0.0	0.0	0.0	0.0	0.0	0.0	0.0	0.0	0.0	9.59E-06
	T	8.87E-06	6.70E-05	1.02E-04	1.02E-04	7.04E-05	4.98E-05	1.01E-04	7.55E-05	1.90E-06	5.15E-04	1.84E-04
THYROID	G	2.94E-06	1.41E-05	1.03E-04	1.03E-04	1.18E-04	6.05E-05	9.90E-05	2.01E-05	6.70E-07	6.00E-02	1.90E-04
	B	0.0	0.0	0.0	0.0	0.0	0.0	0.0	0.0	0.0	3.36E-02	9.59E-06
	T	2.94E-06	1.41E-05	1.03E-04	1.03E-04	1.18E-04	6.05E-05	9.90E-05	2.01E-05	6.70E-07	9.36E-02	1.99E-04
UTERUS	G	2.15E-03	7.80E-05	9.50E-05	9.50E-05	2.20E-04	8.52E-05	8.43E-05	6.91E-05	8.90E-49	2.80E-06	2.60E-04
	B	0.0	0.0	0.0	0.0	0.0	0.0	0.0	0.0	0.0	0.0	9.59E-06
	T	2.15E-03	7.80E-05	9.50E-05	9.50E-05	2.20E-04	8.52E-05	8.43E-05	6.91E-05	8.90E-49	2.80E-06	2.70E-04
T BODY	G	2.48E-04	2.42E-04	1.80E-04	1.80E-04	1.99E-04	1.61E-04	1.18E-04	2.11E-04	1.79E-04	1.64E-04	1.81E-04
	B	9.59E-06	9.59E-06	9.59E-06	9.59E-06	9.59E-06	9.59E-06	9.59E-06	9.59E-06	9.59E-06	9.59E-06	9.59E-06
	T	2.57E-04	2.52E-04	1.90E-04	1.90E-04	2.09E-04	1.71E-04	1.27E-04	2.20E-04	1.89E-04	1.73E-04	1.91E-04

*"MUSCLE" VALUES MAY BE USED FOR "SEPARABLE FAT" WITH ADJUSTMENT (SEE TEXT)
PRINCIPLE REFERENCE-SIIVOLA, A. AND GRAEFFE, NUCL. PHYS. A109, 369 (1968)
DATE DECAY DATA REVIEWED-JANUARY 1973

S, AVERAGE DOSE EQUIVALENT PER UNIT ACCUMULATED ACTIVITY (REM/UCI-DAY), FOR 41-NIOBIUM-97 (TB=7.200E 01 MIN)

DATE OF TABLE 11-27-74

TARGET ORGANS		SOURCE ORGANS										
		ADRENALS	BLAD CON	S CONT	SI+CONT	ULI CONT	LLI CONT	KIDNEYS	LIVER	LUNG	RESP LYM NODE	MUSCLE*
ADRENALS	G	5.28E-02	2.76E-05	2.46E-04	1.40E-04	1.25E-04	5.72E-05	1.42E-03	5.57E-04	2.78E-04	2.78E-04	1.76E-04
	B	1.71E 00	0.0	0.0	0.0	0.0	0.0	0.0	0.0	0.0	0.0	0.0
	T	1.76E 00	2.76E-05	2.46E-04	1.40E-04	1.25E-04	5.72E-05	1.42E-03	5.57E-04	2.78E-04	2.78E-04	1.76E-04
BLAD WALL	G	1.82E-05	8.32E-03	5.45E-05	3.45E-04	2.28E-04	6.23E-04	4.78E-05	3.40E-05	9.28E-06	9.28E-06	2.04E-04
	B	0.0	5.97E-02	0.0	0.0	0.0	0.0	0.0	0.0	0.0	0.0	0.0
	T	1.82E-05	6.80E-02	5.45E-05	3.45E-04	2.28E-04	6.23E-04	4.78E-05	3.40E-05	9.28E-06	9.28E-06	2.04E-04
GI TRACT S WALL	G	3.39E-04	4.59E-05	5.93E-03	3.92E-04	4.13E-04	1.98E-04	3.83E-04	2.20E-04	2.15E-04	2.15E-04	1.62E-04
	B	0.0	0.0	4.78E-02	0.0	0.0	0.0	0.0	0.0	0.0	0.0	0.0
	T	3.39E-04	4.59E-05	5.37E-02	3.92E-04	4.13E-04	1.98E-04	3.83E-04	2.20E-04	2.15E-04	2.15E-04	1.62E-04
SI+CONT	G	1.10E-04	3.03E-04	2.98E-04	3.50E-03	1.84E-03	1.02E-03	3.16E-04	1.82E-04	3.40E-05	3.40E-05	1.78E-04
	B	0.0	0.0	0.0	2.99E-02	0.0	0.0	0.0	0.0	0.0	0.0	0.0
	T	1.10E-04	3.03E-04	2.98E-04	3.34E-02	1.84E-03	1.02E-03	3.16E-04	1.82E-04	3.40E-05	3.40E-05	1.78E-04
ULI WALL	G	1.24E-04	2.56E-04	3.66E-04	2.59E-03	4.90E-03	4.72E-04	3.29E-04	2.88E-04	4.56E-05	4.56E-05	1.87E-04
	B	0.0	0.0	0.0	0.0	5.43E-02	0.0	0.0	0.0	0.0	0.0	0.0
	T	1.24E-04	2.56E-04	3.66E-04	2.59E-03	5.92E-02	4.72E-04	3.29E-04	2.88E-04	4.56E-05	4.56E-05	1.87E-04
LLI WALL	G	3.71E-05	7.90E-04	1.50E-04	7.73E-04	3.55E-04	5.85E-03	1.01E-04	3.56E-05	9.71E-06	9.71E-06	1.94E-04
	B	0.0	0.0	0.0	0.0	0.0	8.85E-02	0.0	0.0	0.0	0.0	0.0
	T	3.71E-05	7.90E-04	1.50E-04	7.73E-04	3.55E-04	9.43E-02	1.01E-04	3.56E-05	9.71E-06	9.71E-06	1.94E-04
KIDNEYS	G	1.30E-03	4.36E-05	3.76E-04	3.64E-04	3.18E-04	9.93E-05	8.28E-03	4.27E-04	1.18E-04	1.18E-04	1.65E-04
	B	0.0	0.0	0.0	0.0	0.0	0.0	7.70E-02	0.0	0.0	0.0	0.0
	T	1.30E-03	4.36E-05	3.76E-04	3.64E-04	3.18E-04	9.93E-05	8.53E-02	4.27E-04	1.18E-04	1.18E-04	1.65E-04
LIVER	G	5.52E-04	3.37E-05	2.31E-04	2.10E-04	2.83E-04	4.18E-05	4.51E-04	2.92E-03	2.73E-04	2.73E-04	1.29E-04
	B	0.0	0.0	0.0	0.0	0.0	0.0	0.0	1.33E-02	0.0	0.0	0.0
	T	5.52E-04	3.37E-05	2.31E-04	2.10E-04	2.83E-04	4.18E-05	4.51E-04	1.62E-02	2.73E-04	2.73E-04	1.29E-04
LUNGS	G	2.68E-04	6.97E-06	2.10E-04	3.95E-05	4.23E-05	1.41E-05	1.12E-04	2.76E-04	1.65E-03	1.65E-03	1.54E-04
	B	0.0	0.0	0.0	0.0	0.0	0.0	0.0	0.0	2.39E-02	2.39E-02	0.0
	T	2.68E-04	6.97E-06	2.10E-04	3.95E-05	4.23E-05	1.41E-05	1.12E-04	2.76E-04	2.55E-02	2.55E-02	1.54E-04
RESP LYM NODE	G	2.68E-04	6.97E-06	2.10E-04	3.95E-05	4.23E-05	1.41E-05	1.12E-04	2.76E-04	1.65E-03	1.65E-03	1.54E-04
	B	0.0	0.0	0.0	0.0	0.0	0.0	0.0	0.0	2.39E-02	1.59E 00	0.0
	T	2.68E-04	6.97E-06	2.10E-04	3.95E-05	4.23E-05	1.41E-05	1.12E-04	2.76E-04	2.55E-02	1.59E 00	1.54E-04
MUSCLE*	G	1.76E-04	2.04E-04	1.62E-04	1.78E-04	1.70E-04	1.94E-04	1.65E-04	1.29E-04	1.54E-04	1.54E-04	1.75E-04
	B	0.0	0.0	0.0	0.0	0.0	0.0	0.0	0.0	0.0	0.0	8.53E-04
	T	1.76E-04	2.04E-04	1.62E-04	1.78E-04	1.70E-04	1.94E-04	1.65E-04	1.29E-04	1.54E-04	1.54E-04	1.03E-03
OVARIES	G	6.28E-05	6.47E-04	9.58E-05	1.06E-03	1.26E-03	1.85E-03	1.51E-04	4.33E-05	1.85E-05	1.85E-05	2.28E-04
	B	0.0	0.0	0.0	0.0	0.0	0.0	0.0	0.0	0.0	0.0	0.0
	T	6.28E-05	6.47E-04	9.58E-05	1.06E-03	1.26E-03	1.85E-03	1.51E-04	4.33E-05	1.85E-05	1.85E-05	2.28E-04

41-NIOBIUM-97 CONTINUED

TARGET ORGANS		SOURCE ORGANS										
		ADRENALS	BLAD CON	S CONT	SI+CONT	ULI CONT	LLI CONT	KIDNEYS	LIVER	LUNG	RESP LYM NODE	MUSCLE*
PANCREAS	G	9.74E-04	3.15E-05	1.96E-03	2.36E-04	2.16E-04	8.59E-05	7.64E-04	5.29E-04	2.99E-04	2.99E-04	2.05E-04
	B	0.0	0.0	0.0	0.0	0.0	0.0	0.0	0.0	0.0	0.0	0.0
	T	9.74E-04	3.15E-05	1.96E-03	2.36E-04	2.16E-04	8.59E-05	7.64E-04	5.29E-04	2.99E-04	2.99E-04	2.05E-04
SKELETON BONE	G	1.56E-04	6.61E-05	6.86E-05	8.98E-05	8.16E-05	1.18E-04	1.12E-04	8.34E-05	1.14E-04	1.14E-04	1.28E-04
	B	0.0	0.0	0.0	0.0	0.0	0.0	0.0	0.0	0.0	0.0	0.0
	T	1.56E-04	6.61E-05	6.86E-05	8.98E-05	8.16E-05	1.18E-04	1.12E-04	8.34E-05	1.14E-04	1.14E-04	1.28E-04
R MARROW	G	2.78E-04	1.40E-04	1.18E-04	2.82E-04	2.41E-04	3.53E-04	2.83E-04	1.21E-04	1.44E-04	1.44E-04	1.56E-04
	B	0.0	0.0	0.0	0.0	0.0	0.0	0.0	0.0	0.0	0.0	0.0
	T	2.78E-04	1.40E-04	1.18E-04	2.82E-04	2.41E-04	3.53E-04	2.83E-04	1.21E-04	1.44E-04	1.44E-04	1.56E-04
Y MARROW	G	1.51E-04	6.08E-05	9.52E-05	1.24E-04	1.16E-04	1.46E-04	1.39E-04	1.23E-04	1.20E-04	1.20E-04	1.27E-04
	B	0.0	0.0	0.0	0.0	0.0	0.0	0.0	0.0	0.0	0.0	0.0
	T	1.51E-04	6.08E-05	9.52E-05	1.24E-04	1.16E-04	1.46E-04	1.39E-04	1.23E-04	1.20E-04	1.20E-04	1.27E-04
T E CL	G	1.56E-04	6.61E-05	6.86E-05	8.98E-05	8.16E-05	1.18E-04	1.12E-04	8.34E-05	1.14E-04	1.14E-04	1.28E-04
	B	0.0	0.0	0.0	0.0	0.0	0.0	0.0	0.0	0.0	0.0	0.0
	T	1.56E-04	6.61E-05	6.86E-05	8.98E-05	8.16E-05	1.18E-04	1.12E-04	8.34E-05	1.14E-04	1.14E-04	1.28E-04
SKIN	G	8.08E-05	7.74E-05	6.97E-05	6.34E-05	6.46E-05	6.92E-05	7.73E-05	7.07E-05	7.92E-05	7.92E-05	1.07E-04
	B	0.0	0.0	0.0	0.0	0.0	0.0	0.0	0.0	0.0	0.0	0.0
	T	8.08E-05	7.74E-05	6.97E-05	6.34E-05	6.46E-05	6.92E-05	7.73E-05	7.07E-05	7.92E-05	7.92E-05	1.07E-04
SPLEEN	G	7.23E-04	2.74E-05	1.08E-03	1.80E-04	1.47E-04	1.14E-04	9.51E-04	1.21E-04	2.47E-04	2.47E-04	1.69E-04
	B	0.0	0.0	0.0	0.0	0.0	0.0	0.0	0.0	0.0	0.0	0.0
	T	7.23E-04	2.74E-05	1.08E-03	1.80E-04	1.47E-04	1.14E-04	9.51E-04	1.21E-04	2.47E-04	2.47E-04	1.69E-04
TESTES	G	8.97E-06	5.75E-04	8.33E-06	4.85E-05	6.18E-05	2.17E-04	1.83E-05	1.87E-05	3.29E-06	3.29E-06	1.43E-04
	B	0.0	0.0	0.0	0.0	0.0	0.0	0.0	0.0	0.0	0.0	0.0
	T	8.97E-06	5.75E-04	8.33E-06	4.85E-05	6.18E-05	2.17E-04	1.83E-05	1.87E-05	3.29E-06	3.29E-06	1.43E-04
THYMUS	G	9.75E-05	4.24E-06	5.01E-05	1.70E-05	1.85E-05	7.41E-06	3.52E-05	1.34E-04	4.40E-04	4.40E-04	1.81E-04
	B	0.0	0.0	0.0	0.0	0.0	0.0	0.0	0.0	0.0	0.0	0.0
	T	9.75E-05	4.24E-06	5.01E-05	1.70E-05	1.85E-05	7.41E-06	3.52E-05	1.34E-04	4.40E-04	4.40E-04	1.81E-04
THYROID	G	2.38E-05	1.39E-06	1.85E-05	5.23E-06	5.57E-06	2.48E-06	1.18E-05	2.21E-05	1.47E-04	1.47E-04	1.58E-04
	B	0.0	0.0	0.0	0.0	0.0	0.0	0.0	0.0	0.0	0.0	0.0
	T	2.38E-05	1.39E-06	1.85E-05	5.23E-06	5.57E-06	2.48E-06	1.18E-05	2.21E-05	1.47E-04	1.47E-04	1.58E-04
UTERUS	G	4.85E-05	1.69E-03	1.06E-04	9.85E-04	5.21E-04	6.37E-04	9.66E-05	4.91E-05	1.22E-05	1.22E-05	2.47E-04
	B	0.0	0.0	0.0	0.0	0.0	0.0	0.0	0.0	0.0	0.0	0.0
	T	4.85E-05	1.69E-03	1.06E-04	9.85E-04	5.21E-04	6.37E-04	9.66E-05	4.91E-05	1.22E-05	1.22E-05	2.47E-04
T BODY	G	1.93E-04	2.14E-04	2.03E-04	2.24E-04	2.19E-04	2.17E-04	1.94E-04	1.95E-04	1.66E-04	1.66E-04	1.66E-04
	B	3.41E-04	3.84E-05	1.02E-04	2.73E-04	1.63E-04	2.02E-04	3.41E-04	3.41E-04	3.41E-04	3.41E-04	3.41E-04
	T	5.34E-04	2.52E-04	3.06E-04	4.97E-04	3.82E-04	4.19E-04	5.36E-04	5.36E-04	5.07E-04	5.07E-04	5.08E-04

CONTINUED NEXT PAGE

41-NIOBIUM-97 CONTINUED

SOURCE ORGANS

TARGET ORGANS		OVARIES	PANCREAS	COR BONE	CAN BONE	R MARROW	Y MARROW	SKIN	SPLEEN	TESTES	THYROID	T BODY
ADRENALS	G	6.87E-05	9.04E-04	2.03E-04	2.03E-04	2.46E-04	1.03E-04	8.28E-05	7.35E-04	8.97E-06	2.38E-05	2.46E-04
	B	0.0	0.0	0.0	0.0	0.0	0.0	0.0	0.0	0.0	0.0	3.41E-04
	T	6.87E-05	9.04E-04	2.03E-04	2.03E-04	2.46E-04	1.03E-04	8.28E-05	7.35E-04	8.97E-06	2.38E-05	5.87E-04
BLAD WALL	G	7.77E-04	2.02E-05	6.76E-05	6.76E-05	9.55E-05	3.21E-05	7.90E-05	2.44E-05	5.93E-04	1.40E-06	2.18E-04
	B	0.0	0.0	0.0	0.0	0.0	0.0	0.0	0.0	0.0	0.0	3.41E-04
	T	7.77E-04	2.02E-05	6.76E-05	6.76E-05	9.55E-05	3.21E-05	7.90E-05	2.44E-05	5.93E-04	1.40E-06	5.59E-04
GI TRACT S WALL	G	9.40E-05	1.93E-03	6.59E-05	6.59E-05	1.22E-04	8.66E-05	7.60E-05	1.10E-03	1.23E-05	1.53E-05	2.01E-04
	B	0.0	0.0	0.0	0.0	0.0	0.0	0.0	0.0	0.0	0.0	3.41E-04
	T	9.40E-05	1.93E-03	6.59E-05	6.59E-05	1.22E-04	8.66E-05	7.60E-05	1.10E-03	1.23E-05	1.53E-05	5.42E-04
SI+CONT	G	1.33E-03	2.04E-04	9.43E-05	9.43E-05	3.05E-04	1.20E-04	6.59E-05	1.60E-04	6.21E-05	2.14E-06	2.26E-04
	B	0.0	0.0	0.0	0.0	0.0	0.0	0.0	0.0	0.0	0.0	3.41E-04
	T	1.33E-03	2.04E-04	9.43E-05	9.43E-05	3.05E-04	1.20E-04	6.59E-05	1.60E-04	6.21E-05	2.14E-06	5.67E-04
ULI WALL	G	1.25E-03	2.50E-04	8.41E-05	8.41E-05	2.30E-04	9.88E-05	7.08E-05	1.61E-04	4.08E-05	2.56E-06	2.21E-04
	B	0.0	0.0	0.0	0.0	0.0	0.0	0.0	0.0	0.0	0.0	3.41E-04
	T	1.25E-03	2.50E-04	8.41E-05	8.41E-05	2.30E-04	9.88E-05	7.08E-05	1.61E-04	4.08E-05	2.56E-06	5.62E-04
LLI WALL	G	1.59E-03	6.28E-05	1.14E-04	1.14E-04	3.49E-04	9.44E-05	7.25E-05	7.80E-05	3.05E-04	2.10E-06	2.27E-04
	B	0.0	0.0	0.0	0.0	0.0	0.0	0.0	0.0	0.0	0.0	3.41E-04
	T	1.59E-03	6.28E-05	1.14E-04	1.14E-04	3.49E-04	9.44E-05	7.25E-05	7.80E-05	3.05E-04	2.10E-06	5.68E-04
KIDNEYS	G	1.30E-04	7.04E-04	1.16E-04	1.16E-04	2.73E-04	1.39E-04	8.81E-05	9.57E-04	1.37E-05	8.55E-06	2.04E-04
	B	0.0	0.0	0.0	0.0	0.0	0.0	0.0	0.0	0.0	0.0	3.41E-04
	T	1.30E-04	7.04E-04	1.16E-04	1.16E-04	2.73E-04	1.39E-04	8.81E-05	9.57E-04	1.37E-05	8.55E-06	5.45E-04
LIVER	G	7.25E-05	4.66E-04	8.25E-05	8.25E-05	1.17E-04	1.27E-04	7.85E-05	1.24E-04	8.12E-06	1.99E-05	2.03E-04
	B	0.0	0.0	0.0	0.0	0.0	0.0	0.0	0.0	0.0	0.0	3.41E-04
	T	7.25E-05	4.66E-04	8.25E-05	8.25E-05	1.17E-04	1.27E-04	7.85E-05	1.24E-04	8.12E-06	1.99E-05	5.44E-04
LUNGS	G	1.49E-05	2.70E-04	1.14E-04	1.14E-04	1.39E-04	1.17E-04	8.00E-05	2.49E-04	2.27E-06	1.26E-04	1.73E-04
	B	0.0	0.0	0.0	0.0	0.0	0.0	0.0	0.0	0.0	0.0	3.41E-04
	T	1.49E-05	2.70E-04	1.14E-04	1.14E-04	1.39E-04	1.17E-04	8.00E-05	2.49E-04	2.27E-06	1.26E-04	5.15E-04
RESP LYM NODE	G	1.49E-05	2.70E-04	1.14E-04	1.14E-04	1.39E-04	1.17E-04	8.00E-05	2.49E-04	2.27E-06	1.26E-04	1.73E-04
	B	0.0	0.0	0.0	0.0	0.0	0.0	0.0	0.0	0.0	0.0	3.41E-04
	T	1.49E-05	2.70E-04	1.14E-04	1.14E-04	1.39E-04	1.17E-04	8.00E-05	2.49E-04	2.27E-06	1.26E-04	5.15E-04
MUSCLE*	G	2.28E-04	2.05E-04	1.28E-04	1.28E-04	1.51E-04	1.19E-04	1.07E-04	1.69E-04	1.43E-04	1.58E-04	1.66E-04
	B	0.0	0.0	0.0	0.0	0.0	0.0	0.0	0.0	0.0	0.0	3.41E-04
	T	2.28E-04	2.05E-04	1.28E-04	1.28E-04	1.51E-04	1.19E-04	1.07E-04	1.69E-04	1.43E-04	1.58E-04	5.08E-04
OVARIES	G	8.68E-02	6.86E-05	1.21E-04	1.21E-04	3.79E-04	1.01E-04	4.71E-05	1.03E-04	1.28E-49	2.50E-06	1.80E-04
	B	2.17E 00	0.0	0.0	0.0	0.0	0.0	0.0	0.0	0.0	0.0	3.41E-04
	T	2.26E 00	6.86E-05	1.21E-04	1.21E-04	3.79E-04	1.01E-04	4.71E-05	1.03E-04	1.28E-49	2.50E-06	5.22E-04

41-NIOBIUM-97 CONTINUED

TARGET ORGANS		SOURCE ORGANS										
		OVARIES	PANCREAS	COR BONE	CAN BONE	R MARROW	Y MARROW	SKIN	SPLEEN	TESTES	THYROID	T BODY
PANCREAS	G	7.88E-05	2.42E-02	1.08E-04	1.08E-04	1.76E-04	1.40E-04	6.43E-05	2.18E-03	7.02E-06	7.72E-06	1.95E-04
	B	0.0	2.39E-01	0.0	0.0	0.0	0.0	0.0	0.0	0.0	0.0	3.41E-04
	T	7.88E-05	2.63E-01	1.08E-04	1.08E-04	1.76E-04	1.40E-04	6.43E-05	2.18E-03	7.02E-06	7.72E-06	5.36E-04
SKELETON BONE	G	1.05E-04	1.04E-04	3.96E-04	3.96E-04	2.64E-04	2.94E-04	9.86E-05	8.81E-05	7.61E-05	8.62E-05	1.70E-04
	B	0.0	0.0	4.78E-03	2.87E-03	1.27E-03	0.0	0.0	0.0	0.0	0.0	3.41E-04
	T	1.05E-04	1.04E-04	5.17E-03	3.26E-03	1.54E-03	2.94E-04	9.86E-05	8.81E-05	7.61E-05	8.62E-05	5.11E-04
R MARROW	G	3.46E-04	1.96E-04	3.55E-04	3.55E-04	8.44E-04	3.05E-04	9.16E-05	1.30E-04	6.03E-05	9.46E-05	1.87E-04
	B	0.0	0.0	2.05E-04	6.36E-03	1.17E-02	0.0	0.0	0.0	0.0	0.0	3.41E-04
	T	3.46E-04	1.96E-04	5.60E-04	6.72E-03	1.25E-02	3.05E-04	9.16E-05	1.30E-04	6.03E-05	9.46E-05	5.28E-04
Y MARROW	G	1.39E-04	1.22E-04	3.42E-04	3.42E-04	3.26E-04	4.99E-04	1.04E-04	1.32E-04	3.29E-05	4.60E-05	1.59E-04
	B	0.0	0.0	0.0	0.0	0.0	1.59E-02	0.0	0.0	0.0	0.0	3.41E-04
	T	1.39E-04	1.22E-04	3.42E-04	3.42E-04	3.26E-04	1.64E-02	1.04E-04	1.32E-04	3.29E-05	4.60E-05	5.00E-04
T E CL	G	1.05E-04	1.04E-04	3.96E-04	3.96E-04	3.56E-04	3.25E-04	9.86E-05	8.81E-05	7.61E-05	8.62E-05	1.70E-04
	B	0.0	0.0	3.07E-03	5.06E-03	4.59E-03	3.98E-03	0.0	0.0	0.0	0.0	3.41E-04
	T	1.05E-04	1.04E-04	3.46E-03	5.46E-03	4.95E-03	4.31E-03	9.86E-05	8.81E-05	7.61E-05	8.62E-05	5.11E-04
SKIN	G	6.26E-05	6.10E-05	1.01E-04	1.01E-04	8.70E-05	1.12E-04	2.36E-04	7.40E-05	1.83E-04	1.02E-04	1.06E-04
	B	0.0	0.0	0.0	0.0	0.0	0.0	9.19E-03	0.0	0.0	0.0	3.41E-04
	T	6.26E-05	6.10E-05	1.01E-04	1.01E-04	8.70E-05	1.12E-04	9.42E-03	7.40E-05	1.83E-04	1.02E-04	4.47E-04
SPLEEN	G	7.76E-05	2.15E-03	9.91E-05	9.91E-05	1.03E-04	1.19E-04	8.17E-05	1.48E-02	1.27E-05	1.81E-05	2.04E-04
	B	0.0	0.0	0.0	0.0	0.0	0.0	0.0	1.33E-01	0.0	0.0	3.41E-04
	T	7.76E-05	2.15E-03	9.91E-05	9.91E-05	1.03E-04	1.19E-04	8.17E-05	1.48E-01	1.27E-05	1.81E-05	5.46E-04
TESTES	G	1.28E-49	9.73E-06	7.02E-05	7.02E-05	5.02E-05	1.10E-04	9.99E-05	1.19E-05	4.10E-02	5.46E-07	2.12E-04
	B	0.0	0.0	0.0	0.0	0.0	0.0	0.0	0.0	6.82E-01	0.0	3.41E-04
	T	1.28E-49	9.73E-06	7.02E-05	7.02E-05	5.02E-05	1.10E-04	9.99E-05	1.19E-05	7.23E-01	5.46E-07	5.53E-04
THYMUS	G	7.80E-06	6.15E-05	9.17E-05	9.17E-05	6.06E-05	4.48E-05	9.52E-05	6.44E-05	1.60E-06	4.84E-04	1.65E-04
	B	0.0	0.0	0.0	0.0	0.0	0.0	0.0	0.0	0.0	0.0	3.41E-04
	T	7.80E-06	6.15E-05	9.17E-05	9.17E-05	6.06E-05	4.48E-05	9.52E-05	6.44E-05	1.60E-06	4.84E-04	5.07E-04
THYROID	G	2.50E-06	1.59E-05	1.06E-04	1.06E-04	1.07E-04	5.41E-05	9.27E-05	1.80E-05	5.46E-07	5.51E-02	1.71E-04
	B	0.0	0.0	0.0	0.0	0.0	0.0	0.0	0.0	0.0	1.19E 00	3.41E-04
	T	2.50E-06	1.59E-05	1.06E-04	1.06E-04	1.07E-04	5.41E-05	9.27E-05	1.80E-05	5.46E-07	1.25E 00	5.12E-04
UTERUS	G	2.00E-03	7.19E-05	8.02E-05	8.02E-05	2.08E-04	7.75E-05	7.35E-05	6.00E-05	1.28E-49	2.38E-06	2.26E-04
	B	0.0	0.0	0.0	0.0	0.0	0.0	0.0	0.0	0.0	0.0	3.41E-04
	T	2.00E-03	7.19E-05	8.02E-05	8.02E-05	2.08E-04	7.75E-05	7.35E-05	6.00E-05	1.28E-49	2.38E-06	5.67E-04
T BODY	G	2.28E-04	2.23E-04	1.65E-04	1.65E-04	1.83E-04	1.48E-04	1.07E-04	1.94E-04	1.64E-04	1.50E-04	1.66E-04
	B	3.41E-04	3.41E-04	3.41E-04	3.41E-04	3.41E-04	3.41E-04	3.41E-04	3.41E-04	3.41E-04	3.41E-04	3.41E-04
	T	5.69E-04	5.64E-04	5.06E-04	5.06E-04	5.24E-04	4.89E-04	4.48E-04	5.35E-04	5.06E-04	4.91E-04	5.07E-04

*"MUSCLE" VALUES MAY BE USED FOR "SEPARABLE FAT" WITH ADJUSTMENT (SEE TEXT)
PRINCIPLE REFERENCE-SINGH, B. ET AL., NUCL. PHYS. A129, 104 (1969)
DATE DECAY DATA REVIEWED-JULY 1969

S, AVERAGE DOSE EQUIVALENT PER UNIT ACCUMULATED ACTIVITY (REM/UCI-DAY), FOR 42-MOLYBDENUM-99 (TR=6.670E 01 HOURS)

DATE OF TABLE 11-27-74

TARGET ORGANS		SOURCE ORGANS										
		ADRENALS	BLAD CON	S CONT	SI+CONT	ULI CONT	LLI CONT	KIDNEYS	LIVER	LUNG	RESP LYM NODE	MUSCLE*
ADRENALS	G	1.41E-02	6.76E-06	6.37E-05	3.55E-05	3.19E-05	1.40E-05	3.54E-04	1.41E-04	7.06E-05	7.06E-05	4.45E-05
	B	1.44E 00	0.0	0.0	0.0	0.0	0.0	0.0	0.0	0.0	0.0	0.0
	T	1.46E 00	6.76E-06	6.37E-05	3.55E-05	3.19E-05	1.40E-05	3.54E-04	1.41E-04	7.06E-05	7.06E-05	4.45E-05
BLAD WALL	G	5.06E-06	2.13E-03	1.30E-05	7.98E-05	5.94E-05	1.61E-04	1.19E-05	7.28E-06	2.26E-06	2.26E-06	5.15E-05
	B	0.0	5.05E-02	0.0	0.0	0.0	0.0	0.0	0.0	0.0	0.0	0.0
	T	5.06E-06	5.26E-02	1.30E-05	7.98E-05	5.94E-05	1.61E-04	1.19E-05	7.28E-06	2.26E-06	2.26E-06	5.15E-05
GI TRACT S WALL	G	8.55E-05	1.20E-05	1.53E-03	1.01E-04	1.05E-04	4.90E-05	9.71E-05	5.59E-05	5.47E-05	5.47E-05	4.07E-05
	B	0.0	0.0	4.04E-02	0.0	0.0	0.0	0.0	0.0	0.0	0.0	0.0
	T	8.55E-05	1.20E-05	4.19E-02	1.01E-04	1.05E-04	4.90E-05	9.71E-05	5.59E-05	5.47E-05	5.47E-05	4.07E-05
SI+CONT	G	2.72E-05	7.82E-05	7.50E-05	9.04E-04	4.70E-04	2.61E-04	8.04E-05	4.62E-05	8.33E-06	8.33E-06	4.49E-05
	B	0.0	0.0	0.0	2.53E-02	0.0	0.0	0.0	0.0	0.0	0.0	0.0
	T	2.72E-05	7.82E-05	7.50E-05	2.62E-02	4.70E-04	2.61E-04	8.04E-05	4.62E-05	8.33E-06	8.33E-06	4.49E-05
ULI WALL	G	3.11E-05	6.27E-05	9.28E-05	6.73E-04	1.27E-03	1.19E-04	8.28E-05	7.18E-05	1.09E-05	1.09E-05	4.74E-05
	B	0.0	0.0	0.0	0.0	4.59E-02	0.0	0.0	0.0	0.0	0.0	0.0
	T	3.11E-05	6.27E-05	9.28E-05	6.73E-04	4.72E-02	1.19E-04	8.28E-05	7.18E-05	1.09E-05	1.09E-05	4.74E-05
LLI WALL	G	8.46E-06	1.99E-04	3.81E-05	2.00E-04	9.15E-05	1.51E-03	2.50E-05	8.41E-06	2.55E-06	2.55E-06	4.91E-05
	B	0.0	0.0	0.0	0.0	0.0	7.48E-02	0.0	0.0	0.0	0.0	0.0
	T	8.46E-06	1.99E-04	3.81E-05	2.00E-04	9.15E-05	7.64E-02	2.50E-05	8.41E-06	2.55E-06	2.55E-06	4.91E-05
KIDNEYS	G	3.30E-04	1.04E-05	9.58E-05	9.16E-05	8.10E-05	2.57E-05	2.15E-03	1.08E-04	2.89E-05	2.89E-05	4.17E-05
	B	0.0	0.0	0.0	0.0	0.0	0.0	6.52E-02	0.0	0.0	0.0	0.0
	T	3.30E-04	1.04E-05	9.58E-05	9.16E-05	8.10E-05	2.57E-05	6.73E-02	1.08E-04	2.89E-05	2.89E-05	4.17E-05
LIVER	G	1.39E-04	8.15E-06	5.78E-05	5.33E-05	7.22E-05	1.03E-05	1.13E-04	7.51E-04	6.95E-05	6.95E-05	3.25E-05
	B	0.0	0.0	0.0	0.0	0.0	0.0	0.0	1.12E-02	0.0	0.0	0.0
	T	1.39E-04	8.15E-06	5.78E-05	5.33E-05	7.22E-05	1.03E-05	1.13E-04	1.20E-02	6.95E-05	6.95E-05	3.25E-05
LUNGS	G	6.86E-05	1.75E-06	5.22E-05	9.57E-06	1.05E-05	3.65E-06	2.78E-05	7.07E-05	4.37E-04	4.37E-04	3.89E-05
	B	0.0	0.0	0.0	0.0	0.0	0.0	0.0	0.0	2.02E-02	2.02E-02	0.0
	T	6.86E-05	1.75E-06	5.22E-05	9.57E-06	1.05E-05	3.65E-06	2.78E-05	7.07E-05	2.06E-02	2.06E-02	3.89E-05
RESP LYM NODE	G	6.86E-05	1.75E-06	5.22E-05	9.57E-06	1.05E-05	3.65E-06	2.78E-05	7.07E-05	4.36E-04	4.37E-04	3.89E-05
	B	0.0	0.0	0.0	0.0	0.0	0.0	0.0	0.0	2.01E-02	1.35E 00	0.0
	T	6.86E-05	1.75E-06	5.22E-05	9.57E-06	1.05E-05	3.65E-06	2.78E-05	7.07E-05	2.06E-02	1.35E 00	3.89E-05
MUSCLE*	G	4.45E-05	5.15E-05	4.09E-05	4.49E-05	4.29E-05	4.91E-05	4.17E-05	3.25E-05	3.89E-05	3.89E-05	4.43E-05
	B	0.0	0.0	0.0	0.0	0.0	0.0	0.0	0.0	0.0	0.0	7.22E-04
	T	4.45E-05	5.15E-05	4.09E-05	4.49E-05	4.29E-05	4.91E-05	4.17E-05	3.25E-05	3.89E-05	3.89E-05	7.66E-04
OVARIES	G	1.62E-05	1.62E-04	2.68E-05	2.83E-04	3.00E-04	4.90E-04	3.95E-05	1.35E-05	4.51E-06	4.51E-06	5.78E-05
	B	0.0	0.0	0.0	0.0	0.0	0.0	0.0	0.0	0.0	0.0	0.0
	T	1.62E-05	1.62E-04	2.68E-05	2.83E-04	3.00E-04	4.90E-04	3.95E-05	1.35E-05	4.51E-06	4.51E-06	5.78E-05

42-MOLYBDENUM-99 CONTINUED

TARGET ORGANS		SOURCE ORGANS										
		ADRENALS	BLAD CON	S CONT	SI+CONT	ULI CONT	LLI CONT	KIDNEYS	LIVER	LUNG	RESP LYM NODE	MUSCLE*
PANCREAS	G	2.49E-04	8.10E-06	4.96E-04	5.93E-05	5.79E-05	2.15E-05	1.94E-04	1.29E-04	7.28E-05	7.28E-05	5.20E-05
	B	0.0	0.0	0.0	0.0	0.0	0.0	0.0	0.0	0.0	0.0	0.0
	T	2.49E-04	8.10E-06	4.96E-04	5.93E-05	5.79E-05	2.15E-05	1.94E-04	1.29E-04	7.28E-05	7.28E-05	5.20E-05
SKELETON BONE	G	4.15E-05	1.77E-05	1.82E-05	2.43E-05	2.19E-05	3.19E-05	2.97E-05	2.23E-05	3.04E-05	3.04E-05	3.20E-05
	B	0.0	0.0	0.0	0.0	0.0	0.0	0.0	0.0	0.0	0.0	0.0
	T	4.15E-05	1.77E-05	1.82E-05	2.43E-05	2.19E-05	3.19E-05	2.97E-05	2.23E-05	3.04E-05	3.04E-05	3.20E-05
R MARROW	G	7.42E-05	3.83E-05	3.14E-05	7.72E-05	6.56E-05	9.61E-05	7.54E-05	3.20E-05	3.84E-05	3.84E-05	4.15E-05
	B	0.0	0.0	0.0	0.0	0.0	0.0	0.0	0.0	0.0	0.0	0.0
	T	7.42E-05	3.83E-05	3.14E-05	7.72E-05	6.56E-05	9.61E-05	7.54E-05	3.20E-05	3.84E-05	3.84E-05	4.15E-05
Y MARROW	G	4.02E-05	1.64E-05	2.53E-05	3.36E-05	3.11E-05	3.93E-05	3.68E-05	3.30E-05	3.20E-05	3.20E-05	3.35E-05
	B	0.0	0.0	0.0	0.0	0.0	0.0	0.0	0.0	0.0	0.0	0.0
	T	4.02E-05	1.64E-05	2.53E-05	3.36E-05	3.11E-05	3.93E-05	3.68E-05	3.30E-05	3.20E-05	3.20E-05	3.35E-05
T E CL	G	4.15E-05	1.77E-05	1.82E-05	2.43E-05	2.19E-05	3.19E-05	2.97E-05	2.23E-05	3.04E-05	3.04E-05	3.20E-05
	B	0.0	0.0	0.0	0.0	0.0	0.0	0.0	0.0	0.0	0.0	0.0
	T	4.15E-05	1.77E-05	1.82E-05	2.43E-05	2.19E-05	3.19E-05	2.97E-05	2.23E-05	3.04E-05	3.04E-05	3.20E-05
SKIN	G	2.00E-05	1.93E-05	1.71E-05	1.57E-05	1.58E-05	1.72E-05	1.91E-05	1.75E-05	1.95E-05	1.95E-05	2.67E-05
	B	0.0	0.0	0.0	0.0	0.0	0.0	0.0	0.0	0.0	0.0	0.0
	T	2.00E-05	1.93E-05	1.71E-05	1.57E-05	1.58E-05	1.72E-05	1.91E-05	1.75E-05	1.95E-05	1.95E-05	2.67E-05
SPLEEN	G	1.82E-04	7.83E-06	2.76E-04	4.51E-05	3.84E-05	2.84E-05	2.43E-04	3.06E-05	6.35E-05	6.35E-05	4.28E-05
	B	0.0	0.0	0.0	0.0	0.0	0.0	0.0	0.0	0.0	0.0	0.0
	T	1.82E-04	7.83E-06	2.76E-04	4.51E-05	3.84E-05	2.84E-05	2.43E-04	3.06E-05	6.35E-05	6.35E-05	4.28E-05
TESTES	G	2.17E-06	1.42E-04	2.63E-06	1.26E-05	1.48E-05	5.25E-05	4.46E-06	4.95E-06	8.00E-07	8.00E-07	3.58E-05
	B	0.0	0.0	0.0	0.0	0.0	0.0	0.0	0.0	0.0	0.0	0.0
	T	2.17E-06	1.42E-04	2.63E-06	1.26E-05	1.48E-05	5.25E-05	4.46E-06	4.95E-06	8.00E-07	8.00E-07	3.58E-05
THYMUS	G	2.13E-05	1.03E-06	1.44E-05	4.15E-06	4.54E-06	1.80E-06	7.10E-06	2.93E-05	1.15E-04	1.15E-04	4.90E-05
	B	0.0	0.0	0.0	0.0	0.0	0.0	0.0	0.0	0.0	0.0	0.0
	T	2.13E-05	1.03E-06	1.44E-05	4.15E-06	4.54E-06	1.80E-06	7.10E-06	2.93E-05	1.15E-04	1.15E-04	4.90E-05
THYROID	G	5.82E-06	3.40E-07	4.51E-06	1.27E-06	1.35E-06	6.03E-07	2.87E-06	5.62E-06	3.62E-05	3.62E-05	4.00E-05
	B	0.0	0.0	0.0	0.0	0.0	0.0	0.0	0.0	0.0	0.0	0.0
	T	5.82E-06	3.40E-07	4.51E-06	1.27E-06	1.35E-06	6.03E-07	2.87E-06	5.62E-06	3.62E-05	3.62E-05	4.00E-05
UTERUS	G	1.81E-05	4.31E-04	2.66E-05	2.52E-04	1.35E-04	1.67E-04	2.51E-05	1.20E-05	3.08E-06	3.08E-06	6.73E-05
	B	0.0	0.0	0.0	0.0	0.0	0.0	0.0	0.0	0.0	0.0	0.0
	T	1.81E-05	4.31E-04	2.66E-05	2.52E-04	1.35E-04	1.67E-04	2.51E-05	1.20E-05	3.08E-06	3.08E-06	6.73E-05
T BODY	G	4.93E-05	5.45E-05	5.19E-05	5.72E-05	5.59E-05	5.55E-05	4.95E-05	4.97E-05	4.25E-05	4.25E-05	4.21E-05
	B	2.89E-04	3.25E-05	8.66E-05	2.31E-04	1.38E-04	1.71E-04	2.89E-04	2.89E-04	2.89E-04	2.89E-04	2.89E-04
	T	3.38E-04	8.69E-05	1.39E-04	2.88E-04	1.94E-04	2.27E-04	3.38E-04	3.38E-04	3.31E-04	3.31E-04	3.31E-04

CONTINUED NEXT PAGE

42-MOLYBDENUM-99 CONTINUED

SOURCE ORGANS

TARGET ORGANS		OVARIES	PANCREAS	COR BONE	CAN BONE	R MARROW	Y MARROW	SKIN	SPLEEN	TESTES	THYROID	T BODY
ADRENALS	G	1.61E-05	2.24E-04	4.95E-05	4.95E-05	6.94E-05	2.54E-05	2.19E-05	1.91E-04	2.17E-06	5.82E-06	5.85E-05
	B	0.0	0.0	0.0	0.0	0.0	0.0	0.0	0.0	0.0	0.0	2.89E-04
	T	1.61E-05	2.24E-04	4.95E-05	4.95E-05	6.94E-05	2.54E-05	2.19E-05	1.91E-04	2.17E-06	5.82E-06	3.47E-04
BLAD WALL	G	1.99E-04	4.64E-06	1.56E-05	1.56E-05	2.63E-05	8.81E-06	1.99E-05	6.84E-06	1.49E-04	3.42E-07	5.61E-05
	B	0.0	0.0	0.0	0.0	0.0	0.0	0.0	0.0	0.0	0.0	2.89E-04
	T	1.99E-04	4.64E-06	1.56E-05	1.56E-05	2.63E-05	8.81E-06	1.99E-05	6.84E-06	1.49E-04	3.42E-07	3.45E-04
GI TRACT S WALL	G	2.32E-05	4.97E-04	1.64E-05	1.64E-05	3.16E-05	2.21E-05	1.88E-05	2.76E-04	2.67E-06	3.52E-06	5.11E-05
	B	0.0	0.0	0.0	0.0	0.0	0.0	0.0	0.0	0.0	0.0	2.89E-04
	T	2.32E-05	4.97E-04	1.64E-05	1.64E-05	3.16E-05	2.21E-05	1.88E-05	2.76E-04	2.67E-06	3.52E-06	3.40E-04
SI+CONT	G	3.36E-04	5.20E-05	2.37E-05	2.37E-05	7.64E-05	3.02E-05	1.64E-05	4.05E-05	1.50E-05	6.45E-07	5.75E-05
	B	0.0	0.0	0.0	0.0	0.0	0.0	0.0	0.0	0.0	0.0	2.89E-04
	T	3.36E-04	5.20E-05	2.37E-05	2.37E-05	7.64E-05	3.02E-05	1.64E-05	4.05E-05	1.50E-05	6.45E-07	3.46E-04
ULI WALL	G	3.17E-04	6.32E-05	2.16E-05	2.16E-05	5.77E-05	2.53E-05	1.76E-05	4.04E-05	1.06E-05	7.33E-07	5.56E-05
	B	0.0	0.0	0.0	0.0	0.0	0.0	0.0	0.0	0.0	0.0	2.89E-04
	T	3.17E-04	6.32E-05	2.16E-05	2.16E-05	5.77E-05	2.53E-05	1.76E-05	4.04E-05	1.06E-05	7.33E-07	3.44E-04
LLI WALL	G	4.05E-04	1.60E-05	2.97E-05	2.97E-05	8.74E-05	2.42E-05	1.80E-05	1.91E-05	7.49E-05	5.13E-07	5.66E-05
	B	0.0	0.0	0.0	0.0	0.0	0.0	0.0	0.0	0.0	0.0	2.89E-04
	T	4.05E-04	1.60E-05	2.97E-05	2.97E-05	8.74E-05	2.42E-05	1.80E-05	1.91E-05	7.49E-05	5.13E-07	3.45E-04
KIDNEYS	G	3.19E-05	1.78E-04	3.00E-05	3.00E-05	6.80E-05	3.44E-05	2.18E-05	2.44E-04	3.36E-06	2.28E-06	5.19E-05
	B	0.0	0.0	0.0	0.0	0.0	0.0	0.0	0.0	0.0	0.0	2.89E-04
	T	3.19E-05	1.78E-04	3.00E-05	3.00E-05	6.80E-05	3.44E-05	2.18E-05	2.44E-04	3.36E-06	2.28E-06	3.41E-04
LIVER	G	1.82E-05	1.19E-04	2.07E-05	2.07E-05	2.91E-05	3.16E-05	1.93E-05	3.09E-05	2.12E-06	4.87E-06	5.15E-05
	B	0.0	0.0	0.0	0.0	0.0	0.0	0.0	0.0	0.0	0.0	2.89E-04
	T	1.82E-05	1.19E-04	2.07E-05	2.07E-05	2.91E-05	3.16E-05	1.93E-05	3.09E-05	2.12E-06	4.87E-06	3.40E-04
LUNGS	G	3.69E-06	6.86E-05	2.88E-05	2.88E-05	3.51E-05	2.94E-05	2.00E-05	6.31E-05	5.89E-07	3.17E-05	4.34E-05
	B	0.0	0.0	0.0	0.0	0.0	0.0	0.0	0.0	0.0	0.0	2.89E-04
	T	3.69E-06	6.86E-05	2.88E-05	2.88E-05	3.51E-05	2.94E-05	2.00E-05	6.31E-05	5.89E-07	3.17E-05	3.32E-04
RESP LYM NODE	G	3.69E-06	6.86E-05	2.88E-05	2.88E-05	3.51E-05	2.94E-05	2.00E-05	6.31E-05	5.89E-07	3.17E-05	4.34E-05
	B	0.0	0.0	0.0	0.0	0.0	0.0	0.0	0.0	0.0	0.0	2.89E-04
	T	3.69E-06	6.86E-05	2.88E-05	2.88E-05	3.51E-05	2.94E-05	2.00E-05	6.31E-05	5.89E-07	3.17E-05	3.32E-04
MUSCLE*	G	5.78E-05	5.20E-05	3.20E-05	3.20E-05	3.78E-05	2.96E-05	2.67E-05	4.28E-05	3.58E-05	4.00E-05	4.21E-05
	B	0.0	0.0	0.0	0.0	0.0	0.0	0.0	0.0	0.0	0.0	2.89E-04
	T	5.78E-05	5.20E-05	3.20E-05	3.20E-05	3.78E-05	2.96E-05	2.67E-05	4.28E-05	3.58E-05	4.00E-05	3.31E-04
OVARIES	G	2.33E-02	1.91E-05	2.85E-05	2.85E-05	8.92E-05	2.85E-05	1.33E-05	2.20E-05	5.02E-48	6.09E-07	4.57E-05
	B	1.84E 00	0.0	0.0	0.0	0.0	0.0	0.0	0.0	0.0	0.0	2.89E-04
	T	1.86E 00	1.91E-05	2.85E-05	2.85E-05	8.92E-05	2.85E-05	1.33E-05	2.20E-05	5.02E-48	6.09E-07	3.34E-04

42-MOLYBDENUM-99 CONTINUED

TARGET ORGANS		SOURCE ORGANS										
		OVARIES	PANCREAS	COR BONE	CAN BONE	R MARROW	Y MARROW	SKIN	SPLEEN	TESTES	THYROID	T BODY
PANCREAS	G	2.08E-05	6.36E-03	2.77E-05	2.77E-05	4.26E-05	3.41E-05	1.56E-05	5.48E-04	2.06E-06	1.94E-06	5.09E-05
	B	0.0	2.02E-01	0.0	0.0	0.0	0.0	0.0	0.0	0.0	0.0	2.89E-04
	T	2.08E-05	2.08E-01	2.77E-05	2.77E-05	4.26E-05	3.41E-05	1.56E-05	5.48E-04	2.06E-06	1.94E-06	3.40E-04
SKELETON BONE	G	2.84E-05	2.79E-05	1.07E-04	1.07E-04	7.09E-05	7.92E-05	2.56E-05	2.35E-05	2.00E-05	2.25E-05	4.51E-05
	B	0.0	0.0	4.04E-03	2.48E-03	1.04E-03	0.0	0.0	0.0	0.0	0.0	2.89E-04
	T	2.84E-05	2.79E-05	4.15E-03	2.59E-03	1.11E-03	7.92E-05	2.56E-05	2.35E-05	2.00E-05	2.25E-05	3.34E-04
R MARROW	G	9.50E-05	5.27E-05	9.61E-05	9.61E-05	2.29E-04	8.21E-05	2.39E-05	3.47E-05	1.58E-05	2.45E-05	5.01E-05
	B	0.0	0.0	1.57E-04	5.19E-03	1.00E-02	0.0	0.0	0.0	0.0	0.0	2.89E-04
	T	9.50E-05	5.27E-05	2.53E-04	5.29E-03	1.02E-02	8.21E-05	2.39E-05	3.47E-05	1.58E-05	2.45E-05	3.39E-04
Y MARROW	G	3.79E-05	3.27E-05	9.25E-05	9.25E-05	8.82E-05	1.35E-04	2.71E-05	3.51E-05	8.45E-06	1.20E-05	4.22E-05
	B	0.0	0.0	0.0	0.0	0.0	1.35E-02	0.0	0.0	0.0	0.0	2.89E-04
	T	3.79E-05	3.27E-05	9.25E-05	9.25E-05	8.82E-05	1.36E-02	2.71E-05	3.51E-05	8.45E-06	1.20E-05	3.31E-04
T E CL	G	2.84E-05	2.79E-05	1.07E-04	1.07E-04	9.61E-05	8.78E-05	2.56E-05	2.35E-05	2.00E-05	2.25E-05	4.51E-05
	B	0.0	0.0	2.57E-03	4.33E-03	3.85E-03	3.37E-03	0.0	0.0	0.0	0.0	2.89E-04
	T	2.84E-05	2.79E-05	2.68E-03	4.43E-03	3.95E-03	3.46E-03	2.56E-05	2.35E-05	2.00E-05	2.25E-05	3.34E-04
SKIN	G	1.55E-05	1.52E-05	2.47E-05	2.47E-05	2.15E-05	2.75E-05	6.13E-05	1.81E-05	4.59E-05	2.57E-05	2.66E-05
	B	0.0	0.0	0.0	0.0	0.0	0.0	7.77E-03	0.0	0.0	0.0	2.89E-04
	T	1.55E-05	1.52E-05	2.47E-05	2.47E-05	2.15E-05	2.75E-05	7.83E-03	1.81E-05	4.59E-05	2.57E-05	3.15E-04
SPLEEN	G	1.86E-05	5.45E-04	2.43E-05	2.43E-05	2.73E-05	3.06E-05	2.06E-05	3.86E-03	2.55E-06	4.74E-06	5.18E-05
	B	0.0	0.0	0.0	0.0	0.0	0.0	0.0	1.12E-01	0.0	0.0	2.89E-04
	T	1.86E-05	5.45E-04	2.43E-05	2.43E-05	2.73E-05	3.06E-05	2.06E-05	1.16E-01	2.55E-06	4.74E-06	3.40E-04
TESTES	G	5.02E-48	2.63E-06	1.82E-05	1.82E-05	1.25E-05	2.81E-05	2.65E-05	2.89E-06	1.08E-02	1.36E-07	5.02E-05
	B	0.0	0.0	0.0	0.0	0.0	0.0	0.0	0.0	5.77E-01	0.0	2.89E-04
	T	5.02E-48	2.63E-06	1.82E-05	1.82E-05	1.25E-05	2.81E-05	2.65E-05	2.89E-06	5.88E-01	1.36E-07	3.39E-04
THYMUS	G	1.89E-06	1.63E-05	2.23E-05	2.23E-05	1.75E-05	1.30E-05	2.28E-05	1.63E-05	3.91E-07	1.20E-04	4.41E-05
	B	0.0	0.0	0.0	0.0	0.0	0.0	0.0	0.0	0.0	0.0	2.89E-04
	T	1.89E-06	1.63E-05	2.23E-05	2.23E-05	1.75E-05	1.30E-05	2.28E-05	1.63E-05	3.91E-07	1.20E-04	3.33E-04
THYROID	G	6.09E-07	3.33E-06	2.39E-05	2.39E-05	2.63E-05	1.72E-05	2.28E-05	4.39E-06	1.36E-07	1.46E-02	4.28E-05
	B	0.0	0.0	0.0	0.0	0.0	0.0	0.0	0.0	0.0	1.01E 00	2.89E-04
	T	6.09E-07	3.33E-06	2.39E-05	2.39E-05	2.63E-05	1.72E-05	2.28E-05	4.39E-06	1.36E-07	1.02E 00	3.31E-04
UTERUS	G	5.17E-04	1.79E-05	2.14E-05	2.14E-05	5.30E-05	1.96E-05	1.84E-05	1.54E-05	5.02E-48	5.80E-07	6.11E-05
	B	0.0	0.0	0.0	0.0	0.0	0.0	0.0	0.0	0.0	0.0	2.89E-04
	T	5.17E-04	1.79E-05	2.14E-05	2.14E-05	5.30E-05	1.96E-05	1.84E-05	1.54E-05	5.02E-48	5.80E-07	3.50E-04
T BODY	G	5.83E-05	5.70E-05	4.24E-05	4.24E-05	4.69E-05	3.78E-05	2.70E-05	4.95E-05	4.17E-05	3.83E-05	4.24E-05
	B	2.89E-04	2.89E-04	2.89E-04	2.89E-04	2.89E-04	2.89E-04	2.89E-04	2.89E-04	2.89E-04	2.89E-04	2.89E-04
	T	3.47E-04	3.46E-04	3.31E-04	3.31E-04	3.36E-04	3.26E-04	3.16E-04	3.38E-04	3.30E-04	3.27E-04	3.31E-04

*"MUSCLE" VALUES MAY BE USED FOR "SEPARABLE FAT" WITH ADJUSTMENT (SEE TEXT)
PRINCIPLE REFERENCE-VAN EIJK, C. W. ET AL., NUCL. PHYS. A121, 440 (1968)
DATE DECAY DATA REVIEWED-AUGUST 1973

S, AVERAGE DOSE EQUIVALENT PER UNIT ACCUMULATED ACTIVITY (REM/UCI-DAY), FOR 43-TECHNETIUM-99M (TR=6.031E 00 HOURS)

DATE OF TABLE 11-27-74

TARGET ORGANS		SOURCE ORGANS										
		ADRENALS	BLAD CON	S CONT	SI+CONT	ULI CONT	LLI CONT	KIDNEYS	LIVER	LUNG	RESP LYM NODE	MUSCLE*
ADRENALS	G	1.05E-02	3.71E-06	6.53E-05	2.49E-05	2.20E-05	8.53E-06	2.64E-04	1.08E-04	6.37E-05	6.37E-05	3.41E-05
	B	6.43E-02	0.0	0.0	0.0	0.0	0.0	0.0	0.0	0.0	0.0	0.0
	T	7.48E-02	3.71E-06	6.53E-05	2.49E-05	2.20E-05	8.53E-06	2.64E-04	1.08E-04	6.37E-05	6.37E-05	3.41E-05
BLAD WALL	G	3.21E-06	1.70E-03	6.44E-06	6.21E-05	5.32E-05	1.66E-04	6.79E-06	3.75E-06	8.63E-07	8.63E-07	4.22E-05
	B	0.0	2.25E-03	0.0	0.0	0.0	0.0	0.0	0.0	0.0	0.0	0.0
	T	3.21E-06	3.95E-03	6.44E-06	6.21E-05	5.32E-05	1.66E-04	6.79E-06	3.75E-06	8.63E-07	8.63E-07	4.22E-05
GI TRACT S WALL	G	6.96E-05	6.56E-06	1.23E-03	8.84E-05	9.06E-05	4.25E-05	8.59E-05	4.45E-05	4.42E-05	4.42E-05	3.02E-05
	B	0.0	0.0	1.80E-03	0.0	0.0	0.0	0.0	0.0	0.0	0.0	0.0
	T	6.96E-05	6.56E-06	3.03E-03	8.84E-05	9.06E-05	4.25E-05	8.59E-05	4.45E-05	4.42E-05	4.42E-05	3.02E-05
SI+CONT	G	1.98E-05	7.21E-05	6.46E-05	7.43E-04	4.02E-04	2.26E-04	6.93E-05	3.92E-05	4.50E-06	4.50E-06	3.67E-05
	B	0.0	0.0	0.0	1.13E-03	0.0	0.0	0.0	0.0	0.0	0.0	0.0
	T	1.98E-05	7.21E-05	6.46E-05	1.87E-03	4.02E-04	2.26E-04	6.93E-05	3.92E-05	4.50E-06	4.50E-06	3.67E-05
ULI WALL	G	2.24E-05	5.27E-05	8.51E-05	5.67E-04	1.01E-03	1.01E-04	6.89E-05	6.04E-05	5.33E-06	5.33E-06	3.81E-05
	B	0.0	0.0	0.0	0.0	2.05E-03	0.0	0.0	0.0	0.0	0.0	0.0
	T	2.24E-05	5.27E-05	8.51E-05	5.67E-04	3.06E-03	1.01E-04	6.89E-05	6.04E-05	5.33E-06	5.33E-06	3.81E-05
LLI WALL	G	5.20E-06	1.78E-04	2.86E-05	1.75E-04	7.68E-05	1.19E-03	1.72E-05	5.48E-06	1.71E-06	1.71E-06	4.01E-05
	B	0.0	0.0	0.0	0.0	0.0	3.34E-03	0.0	0.0	0.0	0.0	0.0
	T	5.20E-06	1.78E-04	2.86E-05	1.75E-04	7.68E-05	4.53E-03	1.72E-05	5.48E-06	1.71E-06	1.71E-06	4.01E-05
KIDNEYS	G	2.70E-04	6.32E-06	8.36E-05	7.68E-05	6.81E-05	2.06E-05	1.67E-03	9.47E-05	2.03E-05	2.03E-05	3.24E-05
	B	0.0	0.0	0.0	0.0	0.0	0.0	2.91E-03	0.0	0.0	0.0	0.0
	T	2.70E-04	6.32E-06	8.36E-05	7.68E-05	6.81E-05	2.06E-05	4.57E-03	9.47E-05	2.03E-05	2.03E-05	3.24E-05
LIVER	G	1.18E-04	4.06E-06	4.83E-05	4.40E-05	6.17E-05	5.97E-06	9.27E-05	6.04E-04	5.88E-05	5.88E-05	2.54E-05
	B	0.0	0.0	0.0	0.0	0.0	0.0	0.0	5.00E-04	0.0	0.0	0.0
	T	1.18E-04	4.06E-06	4.83E-05	4.40E-05	6.17E-05	5.97E-06	9.27E-05	1.10E-03	5.88E-05	5.88E-05	2.54E-05
LUNGS	G	5.87E-05	5.73E-07	4.15E-05	5.29E-06	6.26E-06	1.88E-06	2.03E-05	6.05E-05	3.58E-04	3.58E-04	3.08E-05
	B	0.0	0.0	0.0	0.0	0.0	0.0	0.0	0.0	9.01E-04	9.01E-04	0.0
	T	5.87E-05	5.73E-07	4.15E-05	5.29E-06	6.26E-06	1.88E-06	2.03E-05	6.05E-05	1.26E-03	1.26E-03	3.08E-05
RESP LYM NODE	G	5.87E-05	5.73E-07	4.15E-05	5.29E-06	6.26E-06	1.88E-06	2.03E-05	6.05E-05	3.57E-04	3.58E-04	3.08E-05
	B	0.0	0.0	0.0	0.0	0.0	0.0	0.0	0.0	7.60E-04	6.01E-02	0.0
	T	5.87E-05	5.73E-07	4.15E-05	5.29E-06	6.26E-06	1.88E-06	2.03E-05	6.05E-05	1.12E-03	6.04E-02	3.08E-05
MUSCLE*	G	3.41E-05	4.22E-05	3.31E-05	3.67E-05	3.52E-05	4.01E-05	3.24E-05	2.54E-05	3.08E-05	3.08E-05	3.32E-05
	B	0.0	0.0	0.0	0.0	0.0	0.0	0.0	0.0	0.0	0.0	3.22E-05
	T	3.41E-05	4.22E-05	3.31E-05	3.67E-05	3.52E-05	4.01E-05	3.24E-05	2.54E-05	3.08E-05	3.08E-05	6.54E-05
OVARIES	G	1.47E-05	1.76E-04	1.19E-05	2.58E-04	2.79E-04	4.28E-04	2.69E-05	1.07E-05	2.27E-06	2.27E-06	4.73E-05
	B	0.0	0.0	0.0	0.0	0.0	0.0	0.0	0.0	0.0	0.0	0.0
	T	1.47E-05	1.76E-04	1.19E-05	2.58E-04	2.79E-04	4.28E-04	2.69E-05	1.07E-05	2.27E-06	2.27E-06	4.73E-05

43-TECHNETIUM-99M CONTINUED

TARGET ORGANS		SOURCE ORGANS										
		ADRENALS	BLAD CON	S CONT	SI+CONT	ULI CONT	LLI CONT	KIDNEYS	LIVER	LUNG	RESP LYM NODE	MUSCLE*
PANCREAS	G	2.17E-04	5.55E-06	4.34E-04	4.93E-05	5.62E-05	1.78E-05	1.57E-04	1.02E-04	6.20E-05	6.20E-05	4.27E-05
	B	0.0	0.0	0.0	0.0	0.0	0.0	0.0	0.0	0.0	0.0	0.0
	T	2.17E-04	5.55E-06	4.34E-04	4.93E-05	5.62E-05	1.78E-05	1.57E-04	1.02E-04	6.20E-05	6.20E-05	4.27E-05
SKELETON BONE	G	4.77E-05	2.22E-05	2.17E-05	3.03E-05	2.73E-05	3.91E-05	3.46E-05	2.68E-05	3.53E-05	3.53E-05	2.35E-05
	B	0.0	0.0	0.0	0.0	0.0	0.0	0.0	0.0	0.0	0.0	0.0
	T	4.77E-05	2.22E-05	2.17E-05	3.03E-05	2.73E-05	3.91E-05	3.46E-05	2.68E-05	3.53E-05	3.53E-05	2.35E-05
R MARROW	G	8.64E-05	5.32E-05	3.87E-05	1.02E-04	8.83E-05	1.22E-04	9.08E-05	3.88E-05	4.50E-05	4.50E-05	4.80E-05
	B	0.0	0.0	0.0	0.0	0.0	0.0	0.0	0.0	0.0	0.0	0.0
	T	8.64E-05	5.32E-05	3.87E-05	1.02E-04	8.83E-05	1.22E-04	9.08E-05	3.88E-05	4.50E-05	4.50E-05	4.80E-05
Y MARROW	G	4.55E-05	2.10E-05	3.04E-05	4.25E-05	3.92E-05	4.84E-05	4.24E-05	3.97E-05	3.64E-05	3.64E-05	3.58E-05
	B	0.0	0.0	0.0	0.0	0.0	0.0	0.0	0.0	0.0	0.0	0.0
	T	4.55E-05	2.10E-05	3.04E-05	4.25E-05	3.92E-05	4.84E-05	4.24E-05	3.97E-05	3.64E-05	3.64E-05	3.58E-05
T E CL	G	4.77E-05	2.22E-05	2.17E-05	3.03E-05	2.73E-05	3.91E-05	3.46E-05	2.68E-05	3.53E-05	3.53E-05	2.35E-05
	B	0.0	0.0	0.0	0.0	0.0	0.0	0.0	0.0	0.0	0.0	0.0
	T	4.77E-05	2.22E-05	2.17E-05	3.03E-05	2.73E-05	3.91E-05	3.46E-05	2.68E-05	3.53E-05	3.53E-05	2.35E-05
SKIN	G	1.22E-05	1.31E-05	1.05E-05	9.89E-06	9.90E-06	1.16E-05	1.26E-05	1.17E-05	1.27E-05	1.27E-05	1.73E-05
	B	0.0	0.0	0.0	0.0	0.0	0.0	0.0	0.0	0.0	0.0	0.0
	T	1.22E-05	1.31E-05	1.05E-05	9.89E-06	9.90E-06	1.16E-05	1.26E-05	1.17E-05	1.27E-05	1.27E-05	1.73E-05
SPLEEN	G	1.52E-04	1.59E-05	2.40E-04	3.66E-05	3.47E-05	1.92E-05	2.06E-04	2.20E-05	5.53E-05	5.53E-05	3.42E-05
	B	0.0	0.0	0.0	0.0	0.0	0.0	0.0	0.0	0.0	0.0	0.0
	T	1.52E-04	1.59E-05	2.40E-04	3.66E-05	3.47E-05	1.92E-05	2.06E-04	2.20E-05	5.53E-05	5.53E-05	3.42E-05
TESTES	G	7.63E-07	1.12E-04	1.21E-06	7.40E-06	6.45E-06	4.22E-05	2.12E-06	1.50E-06	1.91E-07	1.91E-07	2.68E-05
	B	0.0	0.0	0.0	0.0	0.0	0.0	0.0	0.0	0.0	0.0	0.0
	T	7.63E-07	1.12E-04	1.21E-06	7.40E-06	6.45E-06	4.22E-05	2.12E-06	1.50E-06	1.91E-07	1.91E-07	2.68E-05
THYMUS	G	9.72E-06	2.60E-07	6.31E-06	1.94E-06	2.43E-06	6.41E-07	4.80E-06	1.52E-05	1.04E-04	1.04E-04	5.05E-05
	B	0.0	0.0	0.0	0.0	0.0	0.0	0.0	0.0	0.0	0.0	0.0
	T	9.72E-06	2.60E-07	6.31E-06	1.94E-06	2.43E-06	6.41E-07	4.80E-06	1.52E-05	1.04E-04	1.04E-04	5.05E-05
THYROID	G	3.02E-06	4.93E-08	2.09E-06	3.57E-07	3.95E-07	1.29E-07	1.15E-06	3.54E-06	2.21E-05	2.21E-05	3.08E-05
	B	0.0	0.0	0.0	0.0	0.0	0.0	0.0	0.0	0.0	0.0	0.0
	T	3.02E-06	4.93E-08	2.09E-06	3.57E-07	3.95E-07	1.29E-07	1.15E-06	3.54E-06	2.21E-05	2.21E-05	3.08E-05
UTERUS	G	2.53E-05	3.77E-04	1.85E-05	2.30E-04	1.28E-04	1.70E-04	2.25E-05	9.28E-06	1.96E-06	1.96E-06	5.56E-05
	B	0.0	0.0	0.0	0.0	0.0	0.0	0.0	0.0	0.0	0.0	0.0
	T	2.53E-05	3.77E-04	1.85E-05	2.30E-04	1.28E-04	1.70E-04	2.25E-05	9.28E-06	1.96E-06	1.96E-06	5.56E-05
T BODY	G	4.05E-05	4.53E-05	4.28E-05	4.84E-05	4.71E-05	4.71E-05	4.04E-05	4.09E-05	3.56E-05	3.56E-05	3.16E-05
	B	1.29E-05	1.45E-06	3.86E-06	1.03E-05	6.14E-06	7.63E-06	1.29E-05	1.29E-05	1.29E-05	1.29E-05	1.29E-05
	T	5.34E-05	4.67E-05	4.67E-05	5.87E-05	5.32E-05	5.47E-05	5.33E-05	5.38E-05	4.85E-05	4.85E-05	4.45E-05

CONTINUED NEXT PAGE

43-TECHNETIUM-99M CONTINUED

TARGET ORGANS		SOURCE ORGANS										
		OVARIES	PANCREAS	COR BONE	CAN BONE	R MARROW	Y MARROW	SKIN	SPLEEN	TESTES	THYROID	T BODY
ADRENALS	G	7.82E-06	2.19E-04	2.61E-05	2.61E-05	5.49E-05	2.81E-05	1.62E-05	1.50E-04	7.63E-07	3.02E-06	4.16E-05
	B	0.0	0.0	0.0	0.0	0.0	0.0	0.0	0.0	0.0	0.0	1.29E-05
	T	7.82E-06	2.19E-04	2.61E-05	2.61E-05	5.49E-05	2.81E-05	1.62E-05	1.50E-04	7.63E-07	3.02E-06	5.45E-05
BLAD WALL	G	1.72E-04	3.40E-06	1.23E-05	1.23E-05	2.37E-05	9.59E-06	1.16E-05	2.79E-06	1.15E-04	5.00E-08	4.12E-05
	B	0.0	0.0	0.0	0.0	0.0	0.0	0.0	0.0	0.0	0.0	1.29E-05
	T	1.72E-04	3.40E-06	1.23E-05	1.23E-05	2.37E-05	9.59E-06	1.16E-05	2.79E-06	1.15E-04	5.00E-08	5.41E-05
GI TRACT S WALL	G	1.94E-05	4.27E-04	1.33E-05	1.33E-05	2.27E-05	1.91E-05	1.29E-05	2.41E-04	7.60E-07	1.09E-06	4.00E-05
	B	0.0	0.0	0.0	0.0	0.0	0.0	0.0	0.0	0.0	0.0	1.29E-05
	T	1.94E-05	4.27E-04	1.33E-05	1.33E-05	2.27E-05	1.91E-05	1.29E-05	2.41E-04	7.60E-07	1.09E-06	5.29E-05
SI+CONT	G	2.91E-04	4.38E-05	1.76E-05	1.76E-05	6.22E-05	2.54E-05	1.08E-05	3.41E-05	8.55E-06	2.22E-07	4.74E-05
	B	0.0	0.0	0.0	0.0	0.0	0.0	0.0	0.0	0.0	0.0	1.29E-05
	T	2.91E-04	4.38E-05	1.76E-05	1.76E-05	6.22E-05	2.54E-05	1.08E-05	3.41E-05	8.55E-06	2.22E-07	6.03E-05
ULI WALL	G	2.66E-04	5.16E-05	1.65E-05	1.65E-05	5.04E-05	2.21E-05	1.11E-05	3.44E-05	7.40E-06	2.67E-07	4.50E-05
	B	0.0	0.0	0.0	0.0	0.0	0.0	0.0	0.0	0.0	0.0	1.29E-05
	T	2.66E-04	5.16E-05	1.65E-05	1.65E-05	5.04E-05	2.21E-05	1.11E-05	3.44E-05	7.40E-06	2.67E-07	5.79E-05
LLI WALL	G	3.51E-04	1.36E-05	2.48E-05	2.48E-05	6.97E-05	2.18E-05	1.15E-05	1.46E-05	6.52E-05	1.04E-07	4.13E-05
	B	0.0	0.0	0.0	0.0	0.0	0.0	0.0	0.0	0.0	0.0	1.29E-05
	T	3.51E-04	1.36E-05	2.48E-05	2.48E-05	6.97E-05	2.18E-05	1.15E-05	1.46E-05	6.52E-05	1.04E-07	5.42E-05
KIDNEYS	G	2.21E-05	1.58E-04	1.98E-05	1.98E-05	5.27E-05	2.56E-05	1.37E-05	2.18E-04	9.61E-07	8.10E-07	3.92E-05
	B	0.0	0.0	0.0	0.0	0.0	0.0	0.0	0.0	0.0	0.0	1.29E-05
	T	2.21E-05	1.58E-04	1.98E-05	1.98E-05	5.27E-05	2.56E-05	1.37E-05	2.18E-04	9.61E-07	8.10E-07	5.20E-05
LIVER	G	1.29E-05	1.06E-04	1.57E-05	1.57E-05	2.21E-05	2.37E-05	1.27E-05	2.36E-05	7.42E-07	2.24E-06	3.93E-05
	B	0.0	0.0	0.0	0.0	0.0	0.0	0.0	0.0	0.0	0.0	1.29E-05
	T	1.29E-05	1.06E-04	1.57E-05	1.57E-05	2.21E-05	2.37E-05	1.27E-05	2.36E-05	7.42E-07	2.24E-06	5.21E-05
LUNGS	G	1.43E-06	6.12E-05	2.27E-05	2.27E-05	2.79E-05	2.29E-05	1.40E-05	5.43E-05	1.58E-07	2.25E-05	3.41E-05
	B	0.0	0.0	0.0	0.0	0.0	0.0	0.0	0.0	0.0	0.0	1.29E-05
	T	1.43E-06	6.12E-05	2.27E-05	2.27E-05	2.79E-05	2.29E-05	1.40E-05	5.43E-05	1.58E-07	2.25E-05	4.70E-05
RESP LYM NODE	G	1.43E-06	6.12E-05	2.27E-05	2.27E-05	2.79E-05	2.29E-05	1.40E-05	5.43E-05	1.58E-07	2.25E-05	3.41E-05
	B	0.0	0.0	0.0	0.0	0.0	0.0	0.0	0.0	0.0	0.0	1.29E-05
	T	1.43E-06	6.12E-05	2.27E-05	2.27E-05	2.79E-05	2.29E-05	1.40E-05	5.43E-05	1.58E-07	2.25E-05	4.70E-05
MUSCLE*	G	4.73E-05	4.27E-05	2.35E-05	2.35E-05	2.85E-05	2.08E-05	1.73E-05	3.42E-05	2.68E-05	3.08E-05	3.16E-05
	B	0.0	0.0	0.0	0.0	0.0	0.0	0.0	0.0	0.0	0.0	1.29E-05
	T	4.73E-05	4.27E-05	2.35E-05	2.35E-05	2.85E-05	2.08E-05	1.73E-05	3.42E-05	2.68E-05	3.08E-05	4.45E-05
OVARIES	G	1.78E-02	9.74E-06	1.69E-05	1.69E-05	7.67E-05	3.73E-05	9.12E-06	9.52E-06	8.92E-48	1.18E-07	4.43E-05
	B	8.19E-02	0.0	0.0	0.0	0.0	0.0	0.0	0.0	0.0	0.0	1.29E-05
	T	9.97E-02	9.74E-06	1.69E-05	1.69E-05	7.67E-05	3.73E-05	9.12E-06	9.52E-06	8.92E-48	1.18E-07	5.72E-05

43-TECHNETIUM-99M CONTINUED

TARGET ORGANS		SOURCE ORGANS										
		OVARIES	PANCREAS	COR BONE	CAN BONE	R MARROW	Y MARROW	SKIN	SPLEEN	TESTES	THYROID	T BODY
PANCREAS	G	1.20E-05	4.84E-03	2.05E-05	2.05E-05	4.05E-05	2.73E-05	1.05E-05	4.53E-04	1.32E-06	1.74E-06	4.58E-05
	B	0.0	9.01E-03	0.0	0.0	0.0	0.0	0.0	0.0	0.0	0.0	1.29E-05
	T	1.20E-05	1.38E-02	2.05E-05	2.05E-05	4.05E-05	2.73E-05	1.05E-05	4.53E-04	1.32E-06	1.74E-06	5.87E-05
SKELETON BONE	G	3.69E-05	3.50E-05	1.08E-04	1.08E-04	7.15E-05	7.87E-05	2.39E-05	2.74E-05	2.21E-05	2.44E-05	4.78E-05
	B	0.0	0.0	1.80E-04	1.44E-04	2.42E-05	0.0	0.0	0.0	0.0	0.0	1.29E-05
	T	3.69E-05	3.50E-05	2.88E-04	2.51E-04	9.57E-05	7.87E-05	2.39E-05	2.74E-05	2.21E-05	2.44E-05	6.06E-05
R MARROW	G	1.31E-04	6.74E-05	9.78E-05	9.78E-05	2.35E-04	8.23E-05	2.28E-05	4.11E-05	1.75E-05	2.67E-05	5.63E-05
	B	0.0	0.0	1.32E-06	1.21E-04	5.20E-04	0.0	0.0	0.0	0.0	0.0	1.29E-05
	T	1.31E-04	6.74E-05	9.91E-05	2.19E-04	7.55E-04	8.23E-05	2.28E-05	4.11E-05	1.75E-05	2.67E-05	6.92E-05
Y MARROW	G	4.99E-05	4.05E-05	9.23E-05	9.23E-05	8.99E-05	1.34E-04	2.50E-05	4.12E-05	8.10E-06	1.25E-05	4.44E-05
	B	0.0	0.0	0.0	0.0	0.0	6.01E-04	0.0	0.0	0.0	0.0	1.29E-05
	T	4.99E-05	4.05E-05	9.23E-05	9.23E-05	8.99E-05	7.34E-04	2.50E-05	4.12E-05	8.10E-06	1.25E-05	5.73E-05
T E CL	G	3.69E-05	3.50E-05	1.08E-04	1.08E-04	9.77E-05	8.73E-05	2.39E-05	2.74E-05	2.21E-05	2.44E-05	4.78E-05
	B	0.0	0.0	8.95E-05	1.79E-04	1.81E-04	1.50E-04	0.0	0.0	0.0	0.0	1.29E-05
	T	3.69E-05	3.50E-05	1.97E-04	2.87E-04	2.79E-04	2.37E-04	2.39E-05	2.74E-05	2.21E-05	2.44E-05	6.07E-05
SKIN	G	9.84E-06	9.64E-06	1.57E-05	1.57E-05	1.42E-05	1.76E-05	4.10E-05	1.12E-05	3.27E-05	1.75E-05	1.78E-05
	B	0.0	0.0	0.0	0.0	0.0	0.0	3.46E-04	0.0	0.0	0.0	1.29E-05
	T	9.84E-06	9.64E-06	1.57E-05	1.57E-05	1.42E-05	1.76E-05	3.87E-04	1.12E-05	3.27E-05	1.75E-05	3.07E-05
SPLEEN	G	1.18E-05	4.66E-04	1.39E-05	1.39E-05	2.21E-05	2.50E-05	1.29E-05	2.99E-03	4.17E-07	2.53E-06	4.02E-05
	B	0.0	0.0	0.0	0.0	0.0	0.0	0.0	5.00E-03	0.0	0.0	1.29E-05
	T	1.18E-05	4.66E-04	1.39E-05	1.39E-05	2.21E-05	2.50E-05	1.29E-05	7.99E-03	4.17E-07	2.53E-06	5.30E-05
TESTES	G	8.92E-48	1.32E-06	1.54E-05	1.54E-05	1.09E-05	2.62E-05	2.18E-05	1.16E-06	8.09E-03	1.20E-08	2.70E-05
	B	0.0	0.0	0.0	0.0	0.0	0.0	0.0	0.0	2.57E-02	0.0	1.29E-05
	T	8.92E-48	1.32E-06	1.54E-05	1.54E-05	1.09E-05	2.62E-05	2.18E-05	1.16E-06	3.38E-02	1.20E-08	3.98E-05
THYMUS	G	6.27E-07	1.44E-05	1.25E-05	1.25E-05	2.10E-05	1.76E-05	1.47E-05	6.95E-06	6.08E-08	1.01E-04	4.33E-05
	B	0.0	0.0	0.0	0.0	0.0	0.0	0.0	0.0	0.0	0.0	1.29E-05
	T	6.27E-07	1.44E-05	1.25E-05	1.25E-05	2.10E-05	1.76E-05	1.47E-05	6.95E-06	6.08E-08	1.01E-04	5.61E-05
THYROID	G	1.18E-07	2.83E-06	1.89E-05	1.89E-05	1.63E-05	2.96E-05	1.66E-05	2.08E-06	1.20E-08	1.10E-02	2.37E-05
	B	0.0	0.0	0.0	0.0	0.0	0.0	0.0	0.0	0.0	4.50E-02	1.29E-05
	T	1.18E-07	2.83E-06	1.89E-05	1.89E-05	1.63E-05	2.96E-05	1.66E-05	2.08E-06	1.20E-08	5.61E-02	3.66E-05
UTERUS	G	4.97E-04	1.27E-05	1.37E-05	1.37E-05	5.27E-05	1.60E-05	9.61E-06	9.67E-06	8.92E-48	1.09E-07	5.01E-05
	B	0.0	0.0	0.0	0.0	0.0	0.0	0.0	0.0	0.0	0.0	1.29E-05
	T	4.97E-04	1.27E-05	1.37E-05	1.37E-05	5.27E-05	1.60E-05	9.61E-06	9.67E-06	8.92E-48	1.09E-07	6.30E-05
T BODY	G	4.98E-05	4.88E-05	3.54E-05	3.54E-05	3.92E-05	3.06E-05	1.86E-05	4.08E-05	3.22E-05	3.01E-05	3.40E-05
	B	1.29E-05	1.29E-05	1.29E-05	1.29E-05	1.29E-05	1.29E-05	1.29E-05	1.29E-05	1.29E-05	1.29E-05	1.29E-05
	T	6.27E-05	6.16E-05	4.83E-05	4.83E-05	5.21E-05	4.35E-05	3.15E-05	5.37E-05	4.51E-05	4.29E-05	4.69E-05

*"MUSCLE" VALUES MAY BE USED FOR "SEPARABLE FAT" WITH ADJUSTMENT (SEE TEXT)
PRINCIPLE REFERENCE-LEDERER, C. M. ET AL., TABLE OF ISOTOPES, 6TH ED.
DATE DECAY DATA REVIEWED-AUGUST 1973

ORNL-5000
UC-41 — Health and Safety

INTERNAL DISTRIBUTION

1. D. E. Arthur
2. D. D. Ausmus
3. J. A. Auxier
4. S. R. Bernard
5. R. D. Birkhoff
6. T. J. Burnett
7. H. M. Butler
8. R. O. Chester
9. R. L. Clark
10. R. E. Coleman
11. K. E. Cowser
12. F. L. Culler
13. D. M. Davis
14-38. M. R. Ford
39. C. A. Golden
40. C. R. Guinn
41. E. D. Gupton
42. F. F. Haywood
43. L. C. Henley
44. R. F. Hibbs
45. C. F. Holoway
46. D. G. Jacobs
47. L. C. Johnson
48. T. D. Jones
49. J. C. Ledbetter
50. R. B. Malcolm
51. W. T. Martin
52. C. H. Miller
53. J. R. Muir
54. D. G. Noe
55. W. W. Parkinson
56. H. Postma
57-81. J. W. Poston
82. C. R. Richmond
83. P. S. Rohwer
84. E. L. Sharp
85. R. L. Shoup
86. M. J. Skinner
87. A. J. Smith
88-112. W. S. Snyder
113. E. G. Struxness
114. J. E. Turner
115. B. T. Walters
116. A. D. Warden
117. G. G. Warner
118. S. B. Watson
119. J. A. Worth
120-122. Central Research Library
123. ORNL - Y-12 Technical Library Document Reference Section
124-158. Laboratory Records Dept.
159. Laboratory Records, ORNL, R.C.

EXTERNAL DISTRIBUTION

160. S. J. Adelstein, Shields Warren Radiology Laboratory, 50 Binney Street, Boston, MA 02115
161. R. E. Alexander, Office of Regulation, USAEC, Washington, D.C. 20545
162. M. J. Berger, U. S. Department of Commerce, National Bureau of Standards, Washington, D.C. 20234
163. M. Blau, Roswell Park Memorial Insitute, 666 Elm Street, Buffalo, NY 14203
164. A. B. Brill, Vanderbilt University Medical School, Nashville, TN 37203
165. G. L. Brownell, Physics Research Laboratory, Massachusetts General Hospital, Boston, MA 02114
166. R. L. Butenhoff, DBER, USAEC, Washington, D.C. 20545
167. R. J. Cloutier, ORAU, Oak Ridge, TN 37830

168. J. J. Cohen, National Council on Radiation Protection and Measurements, 7910 Woodmont Avenue, Suite 1016, Washington, D.C. 20014
169. R. D. Cooper, DBER, USAEC, Washington, D.C. 20545
170. George Cowper, Atomic Energy of Canada Ltd., Chalk River Laboratories, Chalk River, Ontario KOJ 1JO, Canada
171. F. T. Cross, Radiological Physics Section, Battelle Northwest, P. O. Box 999, Richland, WA 99352
172. P. N. Dean, Biophysics Section, University of California, LASL, P. O. Box 1663, Los Alamos, NM 87544
173. L. T. Dillman, Department of Physics, Ohio Wesleyan University, Delaware, OH 43015
174. C. W. Edington, DBER, USAEC, Washington, D.C. 20545
175. C. C. Gamertsfelder, Office of Regulation, USAEC, Washington, D.C. 20545
176. S. M. Garry, TVA, Muscle Shoals, AL 35660
177. R. J. Hart, USAEC, ORO, Oak Ridge, TN 37830
178. J. B. Hursh, Atomic Energy Project, University of Rochester, Box 287-Station 3, Rochester, NY 14620
179. R. E. Johnston, Division of Nuclear Medicine, University of North Carolina, Chapel Hill, NC 27514
180. J. A. Lenhard, USAEC, ORO, Oak Ridge, TN 37830
181. J. L. Liverman, DBER, USAEC, Washington, D.C. 20545
182. Robert Loevinger, Radiation Physics Building, National Bureau of Standards, Washington, D.C. 20234
183. C. W. Mays, University of Utah, College of Medicine, Salt Lake City, UT 84112
184. J. G. McAfee, Division of Nuclear Medicine, Upstate Medical Center, 750 East Adams Street, Syracuse, NY 13210
185. R. O. McClellan, Inhalation Toxicology Research Institute, Lovelace Foundation, 5200 Gibson Blvd., S.E., Albuquerque, NM 87106
186. T. T. Mercer, Department of Radiation Biology & Biophysics, University of Rochester School of Medicine and Dentistry, Rochester, NY 14620
187. A. A. Moghissi, Bioengineering Center, Georgia Insitute of Technology, Atlanta, GA 30332
188. K. Z. Morgan, School of Nuclear Engineering, Georgia Institute of Technology, Atlanta, GA 30332
189. P. E. Morrow, Department of Radiation Biology and Biophysics, University of Rochester, Rochester, NY 14620
190. W. R. Ney, National Council on Radiation Protection and Measurements, 7910 Woodmont Avenue, Suite 1016, Washington, D.C. 20014
191. C. C. Palmiter, Office of Radiation Programs, Environmental Protection Agency, Fourth & M Streets, S.W., Washington, D.C. 20460
192. Peter Paras, Director, Division of Radioactive Materials & Nuclear Medicine, Food & Drug Administration, 1901 Chapman Avenue, Rockville, MD 20852
193. W. A. Phillips, Biomedical Division, Lawrence Livermore Laboratory, University of California, P. O. Box 808, Livermore, CA 94550

194. L. R. Rogers, Office of Regulation, USAEC, Washington, D.C. 20545
195. J. S. Robertson, Medical Physics Division, Brookhaven National Laboratory, Upton, LI, NY 11973
196. J. L. Russell, U. S. Environmental Protection Agency, Washington, D. C. 20460
197. E. M. Smith, P. O. Box 128, Walland, TN 37886
198. Gian Sordi, Instituto de Energia Atomica, Cidade Universitaria, Cx. Postal 11.049 - Pinheiros, Sao Paulo, Brazil
199. B. J. Stover, Department of Pharmacology, University of North Carolina, Chapel Hill, NC 27514
200. L. V. Spencer, U. S. Department of Commerce, National Bureau of Standards, Washington, D.C. 20234
201. R. C. Thompson, Biology Department, Battelle Northwest, P. O. Box 999, Richland, WA 99352
202. W. T. Thornton, USAEC, ORO, Oak Ridge, TN 37830
203. J. Vennart, MRC Radiobiology Unit, Harwell, Didcot, Berks. OX11, ORD, England
204. J. C. Villforth, Bureau of Radiological Health, 12720 Twinbrook Parkway, Rockville, MD 20852
205. C. L. Wakamo, Environmental Protection Agency, Atlanta, GA 30309
206. J. E. Watson, TVA, Muscle Shoals, AL 35660
207. W. H. Wilkie, TVA, Muscle, Shoals, AL 35660
208. R. W. Wood, DBER, USAEC, Washington, D.C. 20545

209-453. Given distribution as shown in TID-4500 under Health and Safety category (25 copies — NTIS)

☆U. S. GOVERNMENT PRINTING OFFICE: 1974-748-189/134

Radionuclides for Which S Values Are Given in This Report

Atomic Number	Element	Mass Number	Atomic Number	Element	Mass Number
1	H	3	30	Zn	69
4	Be	7	31	Ga	67
6	C	14	31	Ga	68
7	N	13	31	Ga	72
8	O	15	32	Ge	71
9	F	18	33	As	73
11	Na	22	33	As	74
11	Na	24	34	Se	75
15	P	32	35	Br	82
16	S	35	37	Rb	86
19	K	40	38	Sr	85m
19	K	42	38	Sr	85
20	Ca	45	38	Sr	89
20	Ca	47	38	Sr	90
20	Ca	49	38	Sr	91
21	Sc	47	38	Sr	92
21	Sc	49	39	Y	90m
24	Cr	51	39	Y	90
25	Mn	52m	39	Y	91m
25	Mn	52	39	Y	91
25	Mn	54	39	Y	92
26	Fe	55	39	Y	93
26	Fe	59	40	Zr	95
27	Co	58m	40	Zr	97
27	Co	58	41	Nb	95m
27	Co	60	41	Nb	95
28	Ni	63	41	Nb	97m
29	Cu	64	41	Nb	97
30	Zn	65	42	Mo	99
30	Zn	69m	43	Tc	99m