LOCKHEED MARTIN ENERGY RESEARCH LIBRARIES

3 4456 0510320 5

ORNL-TM-4519

Cy 237

HTGR FUEL REPROCESSING: A WHOLE-BLOCK BURNER WITH RECYCLE OF COOLED GAS FOR TEMPERATURE CONTROL

Paul A. Haas

OAK RIDGE NATIONAL LABORATORY
CENTRAL RESEARCH LIBRARY
DOCUMENT COLLECTION
LIBRARY LOAN COPY
DO NOT TRANSFER TO ANOTHER PERSON
If you wish someone else to see this
document, send in name with document
and the library will arrange a loan.

UCN-7969
(3 3-67)

OAK RIDGE NATIONAL LABORATORY
OPERATED BY UNION CARBIDE CORPORATION • FOR THE U.S. ATOMIC ENERGY COMMISSION

Printed in the United States of America. Available from
National Technical Information Service
U.S. Department of Commerce
5285 Port Royal Road, Springfield, Virginia 22151
Price: Printed Copy $5.45; Microfiche $1.45

This report was prepared as an account of work sponsored by the United States Government. Neither the United States nor the United States Atomic Energy Commission, nor any of their employees, nor any of their contractors, subcontractors, or their employees, makes any warranty, express or implied, or assumes any legal liability or responsibility for the accuracy, completeness or usefulness of any information, apparatus, product or process disclosed, or represents that its use would not infringe privately owned rights.

ORNL-TM-4519
UC-77 — Gas-Cooled Reactor Technology

Contract No. W-7405-eng-26

CHEMICAL TECHNOLOGY DIVISION

HTGR FUEL REPROCESSING: A WHOLE-BLOCK BURNER WITH RECYCLE OF COOLED GAS FOR TEMPERATURE CONTROL

Paul A. Haas

AUGUST 1974

NOTICE This document contains information of a preliminary nature and was prepared primarily for internal use at the Oak Ridge National Laboratory. It is subject to revision or correction and therefore does not represent a final report.

OAK RIDGE NATIONAL LABORATORY
Oak Ridge, Tennessee 37830
operated by
UNION CARBIDE CORPORATION
for the
U.S. ATOMIC ENERGY COMMISSION

LOCKHEED MARTIN ENERGY RESEARCH LIBRARIES

3 4456 0510320 5

CONTENTS

Page

ABSTRACT 1

1. INTRODUCTION 1

1.1 Experimental Results at ORNL 4

2. BURNER REQUIREMENTS FOR HTGR FUEL REPROCESSING 5

2.1 Burner Capacity 5
2.2 Burner Temperature Limitations 6
2.3 Specific Problems or Questions 6

3. EQUILIBRIUM AND RATES FOR BURNER REACTIONS 7

4. PROPOSED WHOLE-BLOCK BURNER FLOWSHEETS 11

4.1 Anticipated Control Behavior 14
4.2 Scale-up for Heat Removal 16
4.3 Other Flowsheet Advantages 18

5. CALCULATIONS FOR AN ADIABATIC WHOLE-BLOCK BURNER 20

5.1 Some General Results 21
5.2 Results for Recycle of CO_2-O_2 to an Adiabatic Burner . . . 23
5.3 Results for Recycle of CO_2-CO to an Adiabatic Whole-Block Burner 29

6. RECOMMENDED EXPERIMENTAL STUDIES 36

7. REFERENCES 38

8. APPENDIX 39

8.1 Calculated Results Using Radiant Heat Transfer 39
8.2 Computer Program 40

HTGR FUEL REPROCESSING: A WHOLE-BLOCK BURNER WITH RECYCLE OF COOLED GAS FOR TEMPERATURE CONTROL

Paul A. Haas

ABSTRACT

Burning of whole fuel blocks (hexagonal prisms about 14 in. across the flats and 31 in. long) is being investigated as one head-end treatment for reprocessing the General Atomic Company type of HTGR fuel. Experimental results with a one-sixth-block burner have shown practical burning rates and good utilization of O_2. This report describes and presents analyses for a whole-block burner with recycle of cooled gas to provide temperature control and heat removal. A simplified model was selected and computer programs were written to calculate gas compositions and temperatures throughout the burner. Complete utilization of O_2 or low concentrations of O_2 in the exit gas depend on graphite temperatures that are sufficiently high to produce CO, which reacts with O_2 in the bulk gas. It does not appear practical to operate under conditions that promote both high utilization of O_2 and low CO concentration in the exit gas. Instead, the burner conditions should be chosen to clearly favor moderate concentrations of either O_2 or CO in the exit gas. Moderate concentrations of O_2 in the exit gas would allow lower graphite temperatures and would probably give the desired burning rates for three axially aligned blocks. Moderate concentrations of CO in the exit gas would ensure high burner capacities but would result in higher temperatures and more complex burner control behavior. An experimental burner is recommended to verify the calculated results. The general conclusions apply to both fluidized- and fixed-bed burners.

1. INTRODUCTION

High Temperature Gas-Cooled Reactor (HTGR) fuel elements commonly contain uranium and thorium carbide and oxide compounds in the form of small fissile and fertile spheres coated with pyrolytic carbon, and are fabricated with high C/Th atom ratios (∿250). One type of HTGR fuel elements is a hexagonal graphite prism approximately 14 in. across the flats and 31 in. long (see Fig. 1). An essential head-end step in HTGR fuel reprocessing involves burning the element to convert the graphite and carbon to

ORNL DWG 71-9528

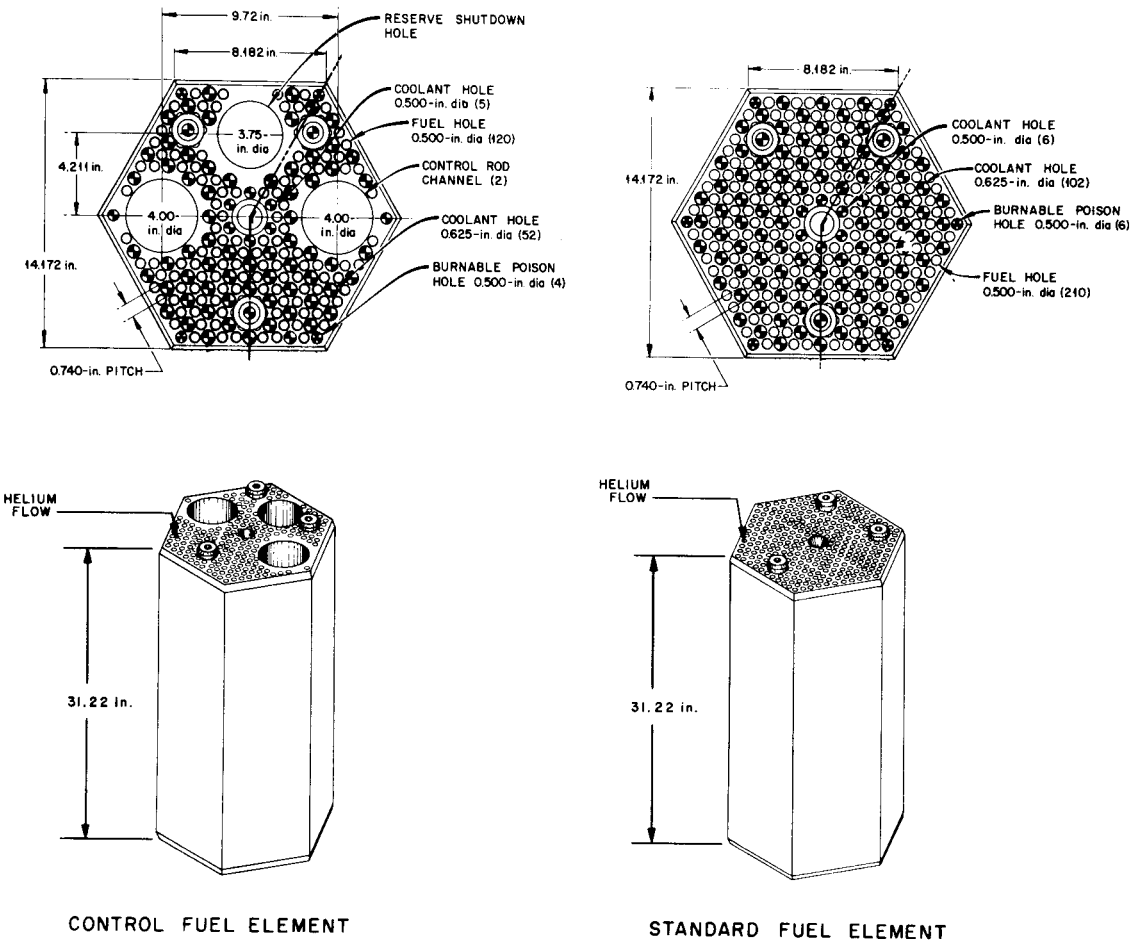

CONTROL FUEL ELEMENT

STANDARD FUEL ELEMENT

Fig. 1. Fort St. Vrain Nuclear Generating Station Fuel Elements.

CO_2, leaving the thorium and uranium as particles or powder, which can subsequently be treated as required. The principal method of purification during reprocessing is based on conventional solvent extraction of $Th(NO_3)_4$ and $UO_2(NO_3)_2$ solutions.

One reprocessing requirement unique to HTGR fuel is separation of the ^{233}U from the ^{236}U. The ^{233}U is bred by capture of excess neutrons in ^{232}Th. The ^{236}U is produced by nonfission capture of neutrons in ^{235}U and should be retired from the fuel cycle. This separation depends on the integrity of a silicon carbide coating on "makeup" particles containing ^{235}U. If the SiC coating remains intact, the makeup particles containing ^{235}U (and ^{236}U) can be chemically or mechanically separated from the fertile particles, which contain thorium and ^{233}U. The temperatures to which the TRISO*-coated particles are subjected must be limited to avoid failures as a result of the high pressures generated by fission product gases.

This report is concerned with the use of a whole-block burner (WBB) as one head-end treatment for HTGR fuels. In this approach, intact fuel blocks (Fig. 1) are loaded into a high-temperature reactor and burned with O_2 (the O_2 may be diluted by other gases). The WBB is also a backup approach for the reference fluidized-bed burners (FBB) under development by the General Atomic Company for the HTGR reprocessing pilot plant. Major operational problems must be solved for both the FBB and the WBB; therefore, final selection of the most effective system must await the results of development programs.

The purpose of this report is to present a WBB concept which either resolves or circumvents the most troublesome reaction rate and heat transfer difficulties involved. The burner requirements are discussed first. Next, the proposed concept is described. Finally, the behavior of the proposed system is examined using computer calculations with a simplified model to predict some results. The mechanical problems of feeding blocks or removing particles or particulates are quite similar for (and somewhat independent of) different WBB burner concepts and are thus not considered here.

---

*TRISO-coated particles have a silicon carbide layer between pyrolytic carbon coatings while BISO coatings are pyrolytic carbon only.

1.1 Experimental Results at ORNL

The reaction kinetics and mechanisms of heat transfer were considered and reported for the burning of early graphite-uranium fuels.[1] Numerical solutions for a mathematical model showed reasonable agreement with experimental results, and potential operation problems were revealed. The descriptions and discussions in this report are based on some conclusions from experimental studies made with a Unit Operations one-sixth-block burner.[2] One is that O_2 can be reacted with an HTGR fuel block at practical rates for some temperatures in the range 800 to 1600°C. A second is that the O_2 concentration of the exit gas will be low over at least part of this range if the gas flow is channeled through the coolant holes of axially aligned blocks. A third is that the reaction of the fuel blocks for specified burner conditions is reproducible without fluctuations, passivation of the graphite surface, or other unpredictable variations. Together, these results indicate that we can obtain a practical, reproducible graphite burning rate and a low O_2 concentration in the exit gas for some O_2-CO_2 mixture at temperatures below 1600°C, but they do not allow us to predict what temperature is required or what the exit CO content will be.

The above experiments were carried out using one-sixth blocks prepared by making three axial cuts across corners of the hexagonal HTGR fuel blocks.[2] The principal mechanism of heat removal was radiation from the graphite to the air-cooled metal burner walls. The one-sixth block is not symmetrical, and calculations for either correlation of experimental data or theoretical approaches are difficult. The range of allowable gas flow rates was limited by the capacity of the off-gas system. Burning could not be maintained at low O_2 concentrations due to excessive heat losses for cooling both by radiation to the walls and by the heat capacity of the diluent gas. The true temperatures of the burning graphite are not certain, as all indicated temperatures would tend to be low.

2. BURNER REQUIREMENTS FOR HTGR FUEL REPROCESSING

A WBB is a chemical reactor for reacting O_2 with a large excess of carbon (graphite) to discharge heat and CO_2-CO. Its design capacity determines the O_2 feed rate. The reactions of O_2 with carbon are exothermic and are thermodynamically favorable up to very high (>2000°C) and unacceptable temperatures; however, the rates of reaction are very low at temperatures below 700°C as graphite has an autoignition temperature of about 725°C in air. Thermodynamically, the equilibrium temperatures would be limited by the endothermic reaction of CO_2 with carbon to produce CO. On the other hand, this reaction is so much slower than the reactions of O_2 with either carbon or CO that we cannot depend on the formation of CO to limit the temperatures. The burner temperatures must be controlled by making provisions to ensure that the heat removed equals that produced by burning. These requirements will be developed in more detail in the sections that follow. A more complete review of burner requirements, including aspects of remote operation, is presented elsewhere.[3]

2.1 Burner Capacity

The WBB should have the capacity for burning at least 1 kg of carbon per minute so that only a reasonable number of multiple units would be required for a full-scale plant. This capacity is equivalent to 83 g-moles of carbon per minute or 7.8×10^6 cal/min for reaction with O_2 to give CO_2. For the usual ceramic conductivities and thicknesses, the heat conducted through a ceramic burner liner would constitute a small fraction of heat released at the proposed burning rate. Thus, a ceramic-lined burner will be approximately adiabatic (see Sect. 4.2).

For C/Th ratios of 250 atoms/atom or 13 g/g, a carbon burning rate of 1 kg/min is equivalent to about 0.1 metric ton of thorium per day, which is the reprocessing rate that would be required for four 1100-MW(e) HTGR reactors. Fifteen burners would be required for a 1.5-metric ton/day reprocessing plant or for 55,000 MW(e).

The two most likely configurations have 72 and 108 coolant holes per block. Thus, the required O_2 feed rate is about 1 g-mole per minute per coolant hole.

2.2 Burner Temperature Limitations

The high burning rates needed require graphite temperatures above those permissible for practical metals; however, the temperatures must not exceed those allowable for TRISO coatings on the fuel particles. The extreme limits are about 800°C minimum to give useful reaction rates of graphite with O_2 and 1600°C maximum to avoid breakage of TRISO coatings. The practical range of operating temperatures for a WBB is more restricted. The reaction of graphite with O_2 produces so much heat and the rate is so dependent on temperature at 800°C that it is extremely difficult to devise a control scheme which will match the heat removal with the heat of reaction throughout a whole block at about 800°C. Use of a low O_2 concentration in conjunction with a large flow of diluent gas for heat removal lowers the rate of reaction and requires graphite temperatures higher than 800°C to give practical rates. Controlled graphite temperatures above 1500°C are probably not satisfactory design values for several reasons:

(1) They allow little margin for avoiding failures of TRISO coatings.

(2) They are far above the allowable temperatures for metals of construction, and design or operating miscalculations could result in rapid failures.

(3) Any predicted temperatures above 1500°C would be uncertain since the kinetics of the endothermic reaction of graphite with CO_2 are poorly known.

(4) The limit of the temperature of TRISO coatings limits the allowable temperature gradients; that is, burning procedures which allow high localized temperatures are not acceptable even though they do not permit the burner walls to become overheated.

2.3 Specific Problems or Questions

The evaluation of burner concepts demands that certain assumptions be made concerning the relative importance of conflicting requirements. The limitations of various concepts or the differences between concepts can be recognized by considering some specific problems. Any proposed burner concept (whole block or any other type) must provide answers to the following problems or questions:

(1) Burner temperatures must be controlled within an acceptable range--high enough to give practical rates of reaction but low enough to avoid damage to materials of construction or the TRISO coatings on fuel particles.

(2) The composition and temperature of the exit gas must be tolerable.

(3) The heat removal mechanism must be well understood and controlled to allow scale-up and operation with confidence.

(4) Accessory procedures such as burner startup, burner feed, and burnout of residual carbon must be dependable and should not require an excessive complexity or amount of equipment.

(5) The burner control procedure must be practical and dependable for remote operation.

3. EQUILIBRIUM AND RATES FOR BURNER REACTIONS

The overall reaction of carbon with O_2 to give CO_2 and heat results from a complicated and difficult-to-correlate set of reactions. Reactions of a solid with a gas to give a single product are often complex. There are three significant solid-gas reactions (ΔH values are for 18°C):

$$C + O_2(g) \rightarrow CO_2(g) \qquad \Delta H = -94.03 \text{ kcal}, \tag{1}$$

$$C + CO_2(g) \rightarrow 2CO(g) \qquad \Delta H = 40.79 \text{ kcal}, \tag{2}$$

$$2C + O_2(g) \rightarrow 2CO(g) \qquad \Delta H = -53.24 \text{ kcal}. \tag{3}$$

A fourth reaction of importance occurs between gases:

$$2CO(g) + O_2(g) \rightarrow 2CO_2(g) \qquad \Delta H = -134.82 \text{ kcal}. \tag{4}$$

Each product can result from a combination of reactions--CO from either (3) or from (1) + (2), and CO_2 from (1) or from (2) + (4).

The normal burner operating conditions (gas concentrations and temperatures) are far from thermodynamic equilibrium for the three reactions of gases with graphite. As written, reactions (1) and (3) are highly favored for all temperatures up to the maximum allowable in a HTGR fuel burner. Reaction (2) becomes more favorable as the temperature increases and is highly favorable at all temperatures (>800°C) which give practical rates of burning. Reaction (4) is also highly favorable at all practical burner temperatures. Therefore, the burner reactions are determined by rate effects instead of by the thermodynamic equilibria. The autoignition temperature of CO in air is 640°C. Thus, any gas mixture containing both CO and O_2 at temperatures above 800°C should react very rapidly until essentially all of one of the reactants is consumed.

The graphite has interconnected, open porosity so that reaction may occur over a finite depth. Hence pore diffusion of the reactants and products can be significant effects. The rate of reaction of O_2 with graphite is much faster (by a factor of 10^5 at 800°C, 0.1 atm)[4] than the rate of reaction of CO_2. It is generally accepted that the O_2 reacts to produce both CO and CO_2, with the CO/CO_2 ratio increasing as the temperature increases.[4] Data on the experimentally observed CO/CO_2 ratios are variable and of uncertain significance as a result of oxidation of CO by O_2. The reaction of CO with O_2 is surface catalyzed. When O_2 is present at high gas temperatures, the CO produced by reaction (3) rapidly reacts with O_2 so that the net effect is an increased rate of CO_2 formation.

The rate of reaction of O_2 or CO_2 with graphite vs graphite temperature shows three controlling effects, with transition regions between them (Fig. 2). At low temperatures (Zone III) where the chemical reactivity is low, the composition of the gas in the graphite pores is approximately that of the bulk gas. The rate of chemical reaction at active sites on the solid surface (including interior surface) is controlling. The catalytic effects of impurities in the graphite are important. For an intermediate temperature (Zone II), the gas composition in the pores decreases from that of the bulk gas at the exterior surface to a low value in the interior of the sample; the diffusion of gas in the pores is controlling. At a high

ORNL DWG 74-1301

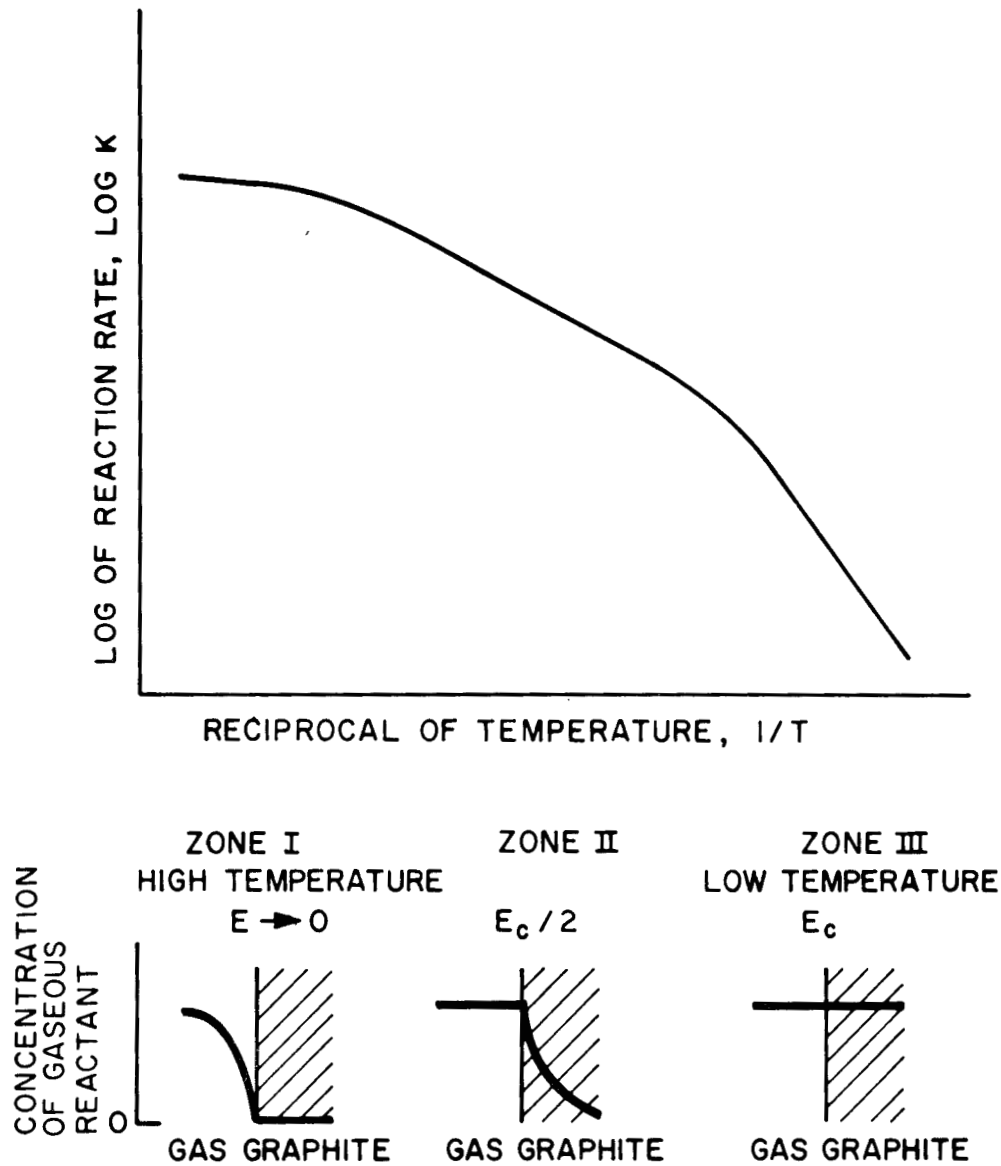

Fig. 2. Characteristic Zones for Reaction of Graphite with O_2 or CO_2.

temperature (Zone I), the concentration of the reacting gas is low at the exterior surface; in this case, the mass transport in the surface film is the rate-controlling step.

The three zones occur at different temperatures for O_2 and CO_2. The data for CO_2-graphite are more consistent and easier to correlate than those for O_2-graphite. For CO_2-graphite, Zone III conditions with an activation energy, E, of about 93 kcal/mole prevail up to about 1200°K. Zone II conditions with an activation energy of about 48 kcal become controlling at about 1500°K. The temperatures where Zone I conditions are controlling are higher than those that are practical for HTGR fuel burning. The reaction of graphite rods with high flow rates of CO_2 at 900 to 1300°C has clearly shown the effects of pore diffusion.[5-7] Bulk density profiles in the 0.50-in.-diam rods show uniform reaction through the rod at 904°C, and reaction over about 0.2-cm thicknesses at 1300°C. The rate equation selected from these and other data is:

$$R = 0.30 \times 10^6 \, e^{\frac{-24,000}{T}} , \qquad (5)$$

where

R = quantity of C or CO_2 reacted, g-moles/cm^2·hr,

T = temperature, °K.

For a WBB, this rate of reaction is not significant below 1150°C and does not give the rates of carbon burning required for temperatures less than 1250°C. The effects of mass transfer through a boundary layer must also be considered at elevated temperatures where this equation would give high rates of reaction.

There are no satisfactory equations for describing the chemical kinetics of the O_2-graphite reaction.[4] The chemical reaction is approximately first order with an activation energy of about 38 kcal/mole. Zone III conditions (below 800°K) give low carbon burning rates that are of no practical importance for an HTGR fuel burner. Zone I conditions with mass transport in the surface film as the controlling effect probably prevail in the WBB for graphite temperatures above 1200°K. When mass

transport is controlling, the rate of reaction shows little dependence on the graphite properties or temperature. For Zone II conditions and the two adjacent transition regions (800 to 1200°K), the interactions of chemical reactivity, graphite porosity, mass transfer, and heat transfer are so complex that each system must be evaluated separately.

The heat transfer effects are quite different for the two gaseous reactants, O_2 and CO_2. The reaction of CO_2 with carbon is endothermic so that the graphite is cooled by the reaction, and is self-limiting since the rate of reaction decreases as the graphite is cooled. The reactions with O_2 are exothermic so that the graphite is heated. The rates of these reactions increase with temperature, and excessive temperatures will occur if the rate of heat transfer is not controlled so as to equal the rate of heat generation.

4. PROPOSED WHOLE-BLOCK BURNER FLOWSHEETS

Figure 3 is the recommended flowsheet for an adiabatic WBB; only the essential features are shown. The burning rate is set by selecting an O_2 feed rate. The burner temperatures are limited to a practical range by controlling the recycle gas flow rate and hence the recycle gas/O_2 flow ratio. The O_2 first reacts with any CO in the recycle gas; then any remaining O_2 reacts with graphite in the burner. The gas leaving the burner is cooled to a temperature compatible with operation of a recycle blower. A key point is that the CO or O_2 content of this recycle gas partly cancels out with respect to the burner heat balance. Calculations to be presented later will show that the exact temperature and composition of the exit gas are not necessary for designing the burner. Also, the heat conducted through a ceramic burner liner will be a small fraction of the heat produced in the burner system; therefore, the burner will be an adiabatic flow reactor. In the remaining calculations and discussions, "adiabatic" will be used to mean removal of heat by the gas without transfer of heat through the burner walls.

A flowsheet showing additional details to solve accessory operating problems is shown in Fig. 4. In general, the details shown are one of

ORNL DWG 74-1302

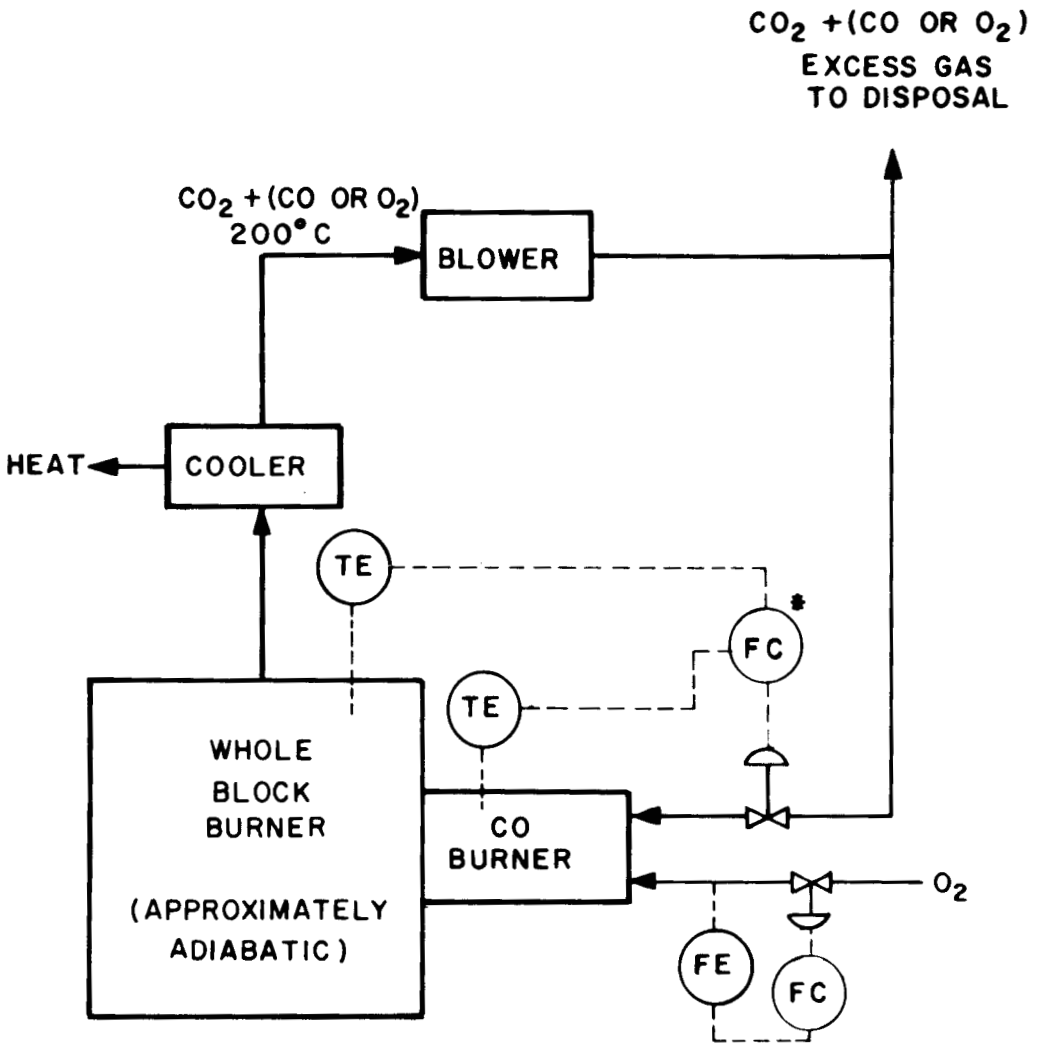

*FC CONTROLS ONE OF TWO TE

Fig. 3. A Recommended Flowsheet for an Adiabatic Whole-Block Burner.

ORNL DWG 74-1303

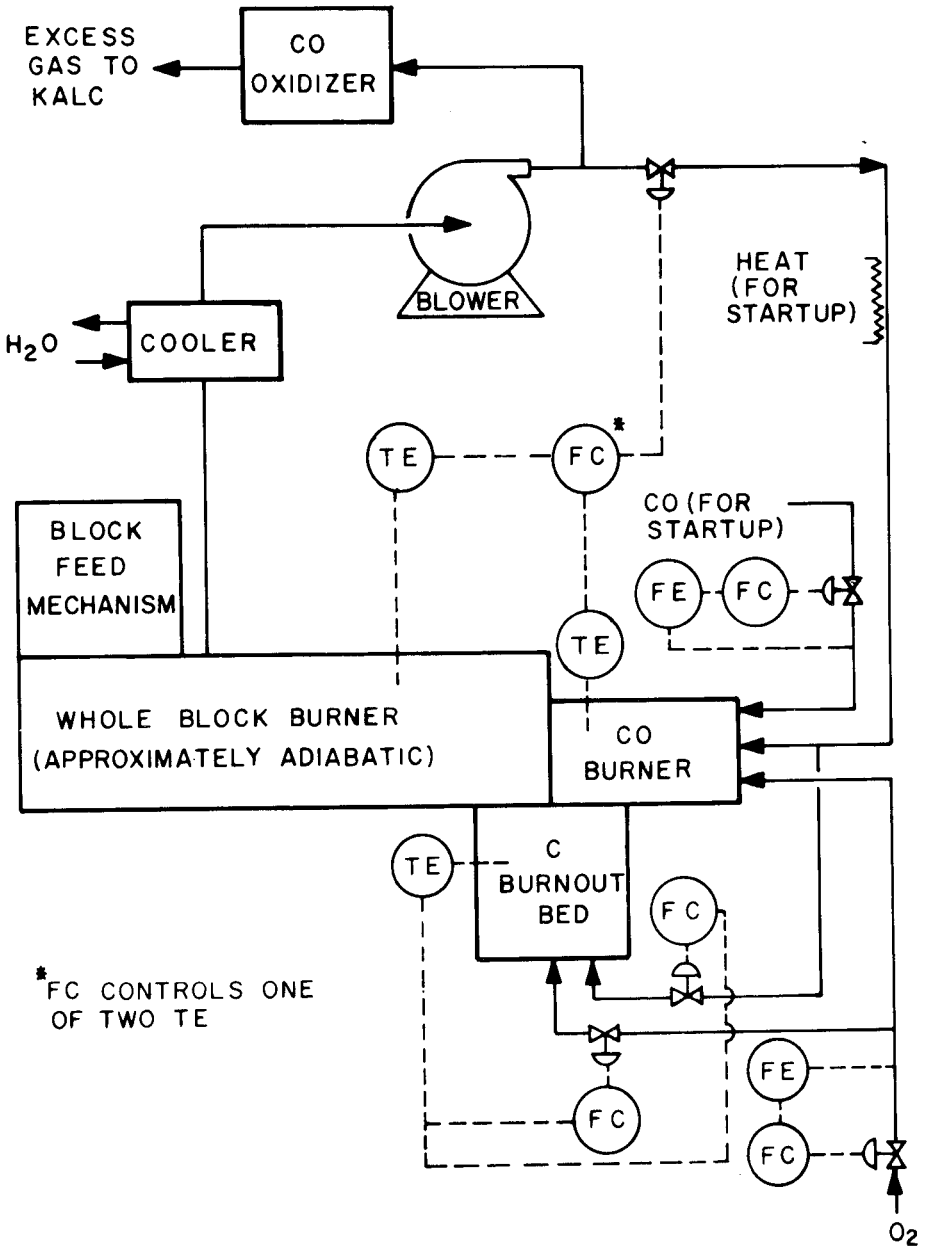

Fig. 4. An Adiabatic Whole-Block Burner Flowsheet Showing Accessory Concepts.

several alternatives and are not necessary to primary concepts shown in Fig. 3.

4.1 Anticipated Control Behavior

The purpose of the burner control system is to obtain steady-state burning with approximately adiabatic operation. The O_2 feed rate is determined by the intended burning rate. The recycle gas rate is regulated in order to control a "representative" graphite temperature. In practice, the graphite temperature varies with position; consequently, it may be more convenient to measure some other temperature. In the discussion in this section the term "temperature" refers to the burner temperature that is representative of the reactivity of the graphite. The recycle ratio is the ratio (in moles/mole) of cooled exit gas recycled to the O_2 feed. With these definitions, the control behavior of an adiabatic burner can be discussed in qualitative terms.

There is a minimum temperature (and a corresponding maximum in the recycle ratio) for which steady-state burning is possible. Below this temperature, the graphite at the inlet loses heat faster than heat is produced by burning, the temperature continues to decrease, and the burner "goes out." At this minimum temperature, the exit gas will contain O_2 since the average O_2 concentration must be high enough to provide the required driving force for the rate-controlling mechanism. At any higher recycle ratios, the only steady state is that obtained under conditions where burning is negligible and the graphite temperature is equal to the inlet gas temperature.

For graphite temperatures above the minimum for sustained burning, steady-state burning is possible. The steady-state recycle gas/O_2 flow ratio and the O_2 concentration in the exit gas decrease as the graphite temperature increases. Since there is less gas to remove the heat in this case, the exit gas temperature increases as the recycle gas/O_2 flow ratio decreases. It is possible to achieve the required rate of burning with lower exit O_2 concentrations because of higher inlet O_2 concentrations (less recycle gas) and higher gas temperatures.

If the graphite temperatures are too low for an appreciable rate of reaction of CO_2 with graphite, utilization of O_2 must be incomplete. The transfer of O_2 to the graphite surface depends on an O_2 concentration gradient and becomes slow as the bulk O_2 concentration becomes small. Therefore, O_2 concentrations in the exit gas can approach zero only when graphite temperatures are sufficiently high to produce CO, which reacts with O_2 in the bulk gas. As the recycle gas/O_2 ratio is reduced, the graphite temperatures increase until the reaction of CO_2 with graphite produces enough CO to react with all the O_2. In this region, control of the burner is somewhat uncertain since the same recycle gas/O_2 feed ratio with only slightly different graphite temperatures can give O_2 or CO in the exit gas. In fact, minor variations between coolant channels in the same graphite blocks could give O_2 in the exit gas from one channel and 10% CO in the exit gas from another.

The CO burner temperature is low when the exit gas contains O_2 (but no CO). As the recycle gas/O_2 feed ratio is reduced further, the CO concentration in the exit gas and the CO burner temperatures increase rapidly. As long as the recycle CO/O_2 feed ratio is less than 2, some O_2 enters the WBB and the maximum system temperature is in the WBB. After the recycle CO/O_2 feed ratio exceeds 2, the CO burner temperature is the highest system temperature. The gas entering the WBB is CO_2-CO, and burning of the graphite proceeds by the endothermic reaction of CO_2 with carbon. When the exit gas contains CO, the WBB exit temperatures will show little variation with the recycle gas/O_2 feed ratio. A cold gas (low CO concentration in the exit gas) heats up to about the same temperature to which a hot gas (high CO concentration in the exit gas) is cooled by the endothermic reaction of CO_2 with carbon.

The recommended control procedure is to fix the O_2 flow rate and vary the recycle gas flow rate (and, therefore, the recycle gas/O_2 flow ratio) to control the CO burner temperature when that temperature is high, or the WBB gas exit temperatures when the CO burner temperature is low. Other variables are less desirable. The composition of the recycle gas, which is a secondary variable, is more difficult to measure than temperature.

The temperature to which the recycle gas is cooled could be the control variable, although it appears less suitable than the recycle gas flow rate. The temperature of greatest concern is the maximum temperature of the burning graphite, but measuring this temperature would be difficult and would give unreliable results.

Either the CO burner temperature or the exit gas temperature will follow the maximum graphite temperature. When little CO is formed, the CO burner is cold and the maximum gas temperature of an adiabatic burner at steady state is approximately the same as the maximum graphite temperature. In other words, the gas is not cooled by the endothermic reaction of CO_2 with graphite and there is no CO to burn in the CO burner. When the temperatures are sufficiently high to cause formation of a significant amount of CO, the CO burner is hot. When the recycle gas contains more than two moles of CO per mole of O_2, all the O_2 combines with CO and the CO burner temperature is the maximum temperature in the system. The optimum range for each temperature will have to be identified by experimental tests or by careful calculations.

The recycle gas flow rate could be increased to decrease the control temperature, or decreased to increase the control temperature. The effect would be to provide more cooling gas either to cool the CO burner or to cool the WBB, depending on the temperature control point in use. However, the control actions would have to be slow to match the slow system reaction times. Gas composition and the high- and low-temperature measurements would be needed to allow shutdown for safety reasons, if necessary.

4.2 Scale-up for Heat Removal

The proposed WBB flowsheets assume that an adiabatic burner is used. All the heat is carried by the gas and is transferred to a coolant fluid in an external heat exchanger. This makes scale-up for heat removal extremely simple. The gas recycle system is designed for the required recycle gas/O_2 ratio (5 to 8) and the O_2 rate necessary to achieve the design burning rate. While the geometry of the burner (number of blocks, etc.) affects the exit gas temperature and composition, it is not important

to the design of the external heat transfer system. The design of the burner can allow for the exit temperature of the gas, as all heat is waste heat at this point and effective means of cooling such as the use of liquid water can be used to protect the metal walls from overheating.

The assumption of an adiabatic burner is required by the large amounts of heat involved and the relatively low thermal conductivities of ceramics. The burning of 1 kg of carbon per minute to form CO_2 releases 470×10^6 cal/hr. The surface area, A, of the burner is about 30,000 cm^2. For a 10-cm thickness (Δx) of ceramic, k = 10(cal/hr·cm·°C), and ΔT = 1000°C, the heat transferred by conduction, q, is:

$$q = \frac{kA\ \Delta T}{\Delta x} = \frac{(10)(30{,}000)(1{,}000)}{10} ,$$

$$q = 30 \times 10^6 \text{ cal/hr.}$$

This calculation shows that about 6% of the heat is transferred for a ΔT of 1000°C and a relatively high thermal conductivity for a ceramic. For a practical burner design, heat losses can be lower and an adiabatic burner can be approximated very easily, whereas temperature control by removal of heat through a ceramic liner is not practical.

The objectives of this report do not include a review of the problems of other burner concepts. However, crude calculations for transfer of heat show that excessive graphite temperatures are almost certain if the heat is to be transferred by conduction or by radiation from the block surface. If the burning occurs over a 4-in. length of block, the ΔT to conduct heat to the surface is excessive. If the reaction occurs on the end surface of the block with heat transfer by radiation from the end, the calculated temperatures are well over 2000°C. Therefore, it appears to be impossible to burn an entire fuel block with pure O_2 at a carbon burning rate of 1 kg/min without exceeding the allowable graphite temperatures. Both conduction through the graphite and radiation from the

graphite surface are inadequate to provide the necessary heat transfer. The only possibility would be that the rate of reaction of CO_2 with carbon would be sufficiently high to remove the heat of reaction; however, this appears unlikely at tolerable temperatures. For experimental studies, the true temperatures of burning graphite are very difficult to measure and are generally unknown.

4.3 Other Flowsheet Advantages

Even after the temperatures, heat removal, and burning rates for steady-state operation of the primary burner have been specified, some of the accessory and non-steady-state operations still present troublesome problems. These have been the greatest sources of difficulties and failures for the experimental studies of both WBBs and FBBs. The WBB concept recommended here has some important advantages in these areas.

The recycle concept using an insulating ceramic liner and a CO burner allows several convenient procedures for heating the cold burner to the operating temperature. For example, the recycled CO_2 might be diverted through a heater to carry heat into the burner, CO from an external supply might be burned in the CO burner, or the carbon burnout bed might be charged with coke and used to add heat to the system. The relatively low rate at which heat is transferred through the burner walls allows a slower and better-controlled heatup than is practical for burners designed for a high rate of heat transfer through the walls. After the leading surface of the graphite is above the ignition temperature, the O_2 feed and recycle gas flows can be increased in a programmed manner to provide a smooth approach to steady-state temperatures.

The use of secondary (and perhaps tertiary) burners to complete the burning of carbon in solids discharged from the primary burner often results in as many problems as are encountered with the primary burner. A carbon burnout bed could be integrated with the burner concept recommended here to resolve some of these problems. With this burnout bed, particle collection, storage, and feeding between burners would be eliminated. Also, poor utilization of O_2 would not be as troublesome since

any remaining O_2 would be utilized in the main burner. In addition, the carbon burnout bed temperature could be controlled by using a recycle gas/O_2 ratio similar to that for the WBB. If most of the carbon is burned in the main burner, the carbon burnout bed may not make up its heat losses and thus may require preheating of the O_2 or external heating.

The high temperatures (estimated to be above 900°C) of the gases leaving the fuel blocks result in burner design problems. A favorable factor is that all the heat is waste heat at this point and overcooling can be used to protect the burner walls and the charging mechanism. It may be convenient to use one or two fuel blocks between the charging mechanism and the gas exit as a thermal baffle; however, in this case, a procedure for separating the blocks at the gas exit would be required.

Since any HTGR fuel burners will use O_2 and may produce CO, the design of any burner must prevent damaging CO-O_2 explosions. According to the concept recommended in this report, the O_2 concentration in the burner exit gas would always be low and the O_2 content would be monitored to provide safety shutdowns. The CO burner would be equipped with a pilot flame or an ignition device. Safety shutoffs from the ignition device and from low or high WBB temperatures would terminate the flow of O_2 (similar to the fuel gas shutoff for usual gas burners). The normal WBB temperatures will be far above the autoignition temperature of CO. The CO burner will have a small volume and a relatively open passageway to the WBB, thereby minimizing the effects of any backfires.

One of the simplest burner startup procedures would be to furnish CO (CO/O_2 ratio of $\sim$2) from an external supply using a selected O_2 feed rate. The control system would provide a gas recycle to limit the CO burner temperature. When the WBB exit temperature reached an acceptable value (perhaps 800°C), the CO rate would be gradually reduced and thus allow the burning of graphite to proceed.

The preferred exit gas would be composed of CO_2 with low CO and/or O_2 contents. Appreciable O_2 concentrations would not be tolerable because they would upset the control procedure; that is, increasing the recycle gas flow might not cool the burners. High CO contents would be indicative

of high temperatures in the burners and would also require oxidation to CO_2 in an exit gas being routed to a decontamination process such as KALC.[8] The maximum acceptable gas recycle rate for a selected O_2 feed rate (and, in turn, the minimum practical burner temperatures) would be that which resulted in the allowable O_2 concentration in the recycle gas. (A higher rate would result in excessive O_2 in the exit gas.) It should be possible to determine experimental limits for acceptable operation vs O_2 feed rate or carbon burning rate as a parameter. As the O_2 feed rate or carbon burning rate increased, the minimum practical graphite temperatures would also increase. The maximum carbon burning rate would be that point at which the graphite temperatures reached the allowable maximum and the gas recycle rate could not be increased further either because of O_2 in the exit gas or because of unacceptable pressure drops or other effects of high flow rates. Experimental results obtained with the Unit Operations one-sixth-block burner lead us to believe that this maximum rate would be far in excess of 1 kg/min. Experimental tests could be made to determine either the lowest acceptable burner temperatures with the O_2 or CO contents at the design rate, or the highest burning rate for a design temperature and CO content.

5. CALCULATIONS FOR AN ADIABATIC WHOLE-BLOCK BURNER

A simplified model was selected and computer programs were written to calculate gas compositions and temperatures throughout the WBB. The purpose of these calculations was to identify the most useful ranges of temperatures and recycle gas compositions. They also provided an indication of the allowable range of reaction rates and a limited verification of the proposed burner control concepts.

For steady-state, adiabatic operation of a WBB, the radial heat transfer between coolant holes is zero; therefore, calculations can be made for a single hole with no radial heat transfer in the graphite. Since axial temperature gradients will be uniform and moderate, the effects of axial heat transfer in the graphite will also be neglected. This makes it possible for calculations to be performed for incremental

elements from the burner inlet to the exit by using a computer program. The simplified model involves several limitations from the following assumptions:

(1) The reaction of O_2 with graphite is controlled by mass transport of O_2 through a surface film; this is valid only for high (>1200°K) graphite temperatures. [The calculated burning rates are too high for graphite temperatures below 1200°K (or 925°C).]

(2) The reaction of CO_2 with graphite is controlled either by pore diffusion with an activation energy of 48 kcal or by mass transport of CO and CO_2 in a surface film. This assumption gives high reaction rates for an intermediate temperature where both effects contribute.

(3) The film thickness for mass transfer is calculated from a correlation for equivalent film thickness for heat transfer. Any errors are somewhat self-correcting with respect to temperatures since the same film thickness is used for mass transfer and heat transfer.

(4) The model does not allow for enlargement of the coolant channels as burning proceeds.

5.1 Some General Results

The calculations were made specifically for the concept of adiabatic burning with a fixed O_2 feed rate and recycle of cooled gas to provide temperature control and heat removal. Two types of results were obtained: (1) calculated numerical values for a selected set of conditions, and (2) general conclusions, many of which would also apply to other burners such as FBBs and fixed-bed "chunk" burners. The general conclusions are discussed in this section.

It does not appear practical to operate under conditions where both the utilization of O_2 is high and the concentration of CO in the exit gas is low. The transfer of O_2 to the graphite surface depends on an O_2 concentration gradient and becomes slow as the bulk O_2 concentration decreases. Therefore, complete utilization of O_2 or low concentrations of O_2 in the exit gas depend on graphite temperatures that are sufficiently high to produce CO, which reacts with O_2 in the bulk gas. In theory, the burner conditions could be selected to produce just enough CO to consume the O_2;

however, the reaction between CO_2 and carbon is so sensitive to small temperature variations from wall heat losses, surface area or flow variations, etc., that this type of control does not appear to be practical. Even if the required conditions could be experimentally determined for a single known flow channel, variations as burning proceeds or between channels would not allow the required control for burning of a whole block.

The burner conditions should be selected to clearly favor a moderately low concentration of either O_2 or CO in the burner exit gases. The remainder of the burner system and the off-gas system can then be designed to accommodate this composition. The burner control procedure, as well as the remainder of the system, is simpler and more dependable when a low concentration of one component is selected than when the design allows for both O_2 and CO in the off-gas. The discussion of specific numerical results will be presented according to the alternatives of CO_2-O_2 or CO_2-CO in the burner exit gas.

Steady-state burning with good temperature control and relatively uniform temperatures are possible in an <u>approximately adiabatic</u> burner in which heat is removed by diluting the feed O_2 with cooled recycle gas. If the reactor is far from adiabatic (that is, a major fraction of the heat is removed by radiation or conduction through the wall), this is not possible since the hottest graphite will be much hotter than the best-cooled graphite. The best-cooled graphite might be too cool to continue burning before the O_2 is diluted sufficiently to limit the maximum temperatures; in such cases, the burner would "go out".

The calculations indicate that adiabatic burners would give practical burning rates without exceeding 5% O_2 in the exit gas. The calculated values are 12 to 20% O_2 in the inlet gas and graphite temperatures of 900 to 1200°C. For WBBs, multiple, axially aligned blocks would be required because the desired carbon burning rate of 1 kg/min cannot be obtained for a single block without exceeding the limits given above.

The calculations, using the best literature data on reaction rates, indicate that burner conditions which give CO in the exit gas must result

from high graphite temperatures with 1250°C as the minimum. For the adiabatic burner, small variations in graphite temperature or activity, with otherwise identical conditions, result in changing the exit gas composition from 0.5% O_2 to >10% CO in this (∿1250°C) temperature region.

The conditions that give CO in the exit gas produce the highest local burning rates since the reaction of CO_2 with carbon at the higher graphite temperatures adds to the burning from mass transfer of O_2 to the graphite surface. If the higher graphite temperatures are acceptable, an adiabatic burner will allow higher burning rates for CO than for O_2 in the exit gas. The exit gas is also hotter, thus requiring less recycle gas for heat removal.

If graphite temperatures are high, the principal reaction of the graphite can be pore-diffusion-controlled reaction with CO_2 and oxidation of the CO after it diffuses out of the graphite. This reaction can decrease the density of the graphite over a finite depth and may result in a release of graphite powder from the weakened, low-density surface.[4-6] Also, the burning of the graphite is concentrated in the region of highest temperature, and any powder is less likely to be burned up while it is being carried through the remainder of the burner. Thus, high local graphite temperatures may be a significant cause of problems associated with graphite powder. The reaction of O_2 with carbon is so rapid that it is controlled by mass transfer through the boundary layer at practical burner temperatures and does not give the in-pore reaction that CO_2 does. Also, conditions that cause O_2 to be present in the exit gas also provide a more uniform distribution of burning throughout the burner and are more favorable to completing the burnup of particles before they are blown out of the burner.

5.2 Results for Recycle of CO_2-O_2 to an Adiabatic Burner

Operation to allow some O_2 in the exit gas has important advantages over conditions requiring recycle of CO_2-CO. The maximum burner temperatures in this type of operation are lower since the adiabatic burner will give appreciable CO concentrations only when the graphite temperatures are

high, as required for reaction of carbon with CO_2. The O_2 is not explosive or toxic in air. The most likely result of non-steady-state operation or of operating difficulties for either of the alternatives is discharge of unused O_2. This is less troublesome when the recycle system is designed for CO_2-O_2 than when a system is designed for CO_2-CO. The reaction of O_2, which is concentrated at the exterior surface of the graphite, is less likely to produce fines than is the higher-temperature reaction of CO_2 in the graphite pores.

The lower temperatures necessary to allow O_2 in the exit gas result in two limitations: (1) up to 30% more recycle gas is necessary to remove the heat, thereby increasing the size of recycle system components; and (2) the maximum capacity of the WBB may be lower if the graphite temperatures are limited in order to limit the production of CO. A consideration of uncertain importance is that reaction occurs throughout the burner when O_2 is present in the exit gas, whereas reaction with CO_2 is concentrated in the areas of highest graphite temperatures.

Calculated steady-state results are shown in several forms for three aligned blocks (length, 243 cm). Figure 5 shows the inlet and exit temperatures and O_2 concentrations vs the recycle gas rate for an O_2 feed rate of 1 g-mole/min. Typical sets of temperatures, O_2 flow rates, and carbon burning rate vs position are shown for two recycle gas rates (Figs. 6 and 7). For a selected exit gas temperature of 1000°C, the graphite temperatures and exit O_2 concentrations are shown vs the O_2 feed rate (Fig. 8). As previously mentioned, the calculated reaction rates are too high for graphite temperatures below 1200°K (or 925°C).

The exit gas temperature appears to be the most reasonable control variable for operation with O_2 in the exit gas. The graphite will have to be preheated to above 800°C, probably by using a preheated CO_2 recycle. Then O_2 feed would be started with a CO_2/O_2 feed ratio near the allowable minimum. This minimum was calculated to be 6 for adiabatic operation (Fig. 5) but would be somewhat lower for a real burner with heat losses. The exit gas temperature would increase as the graphite temperatures increased, and the ratio of recycle gas would be monitored to control

ORNL DWG 74-1304

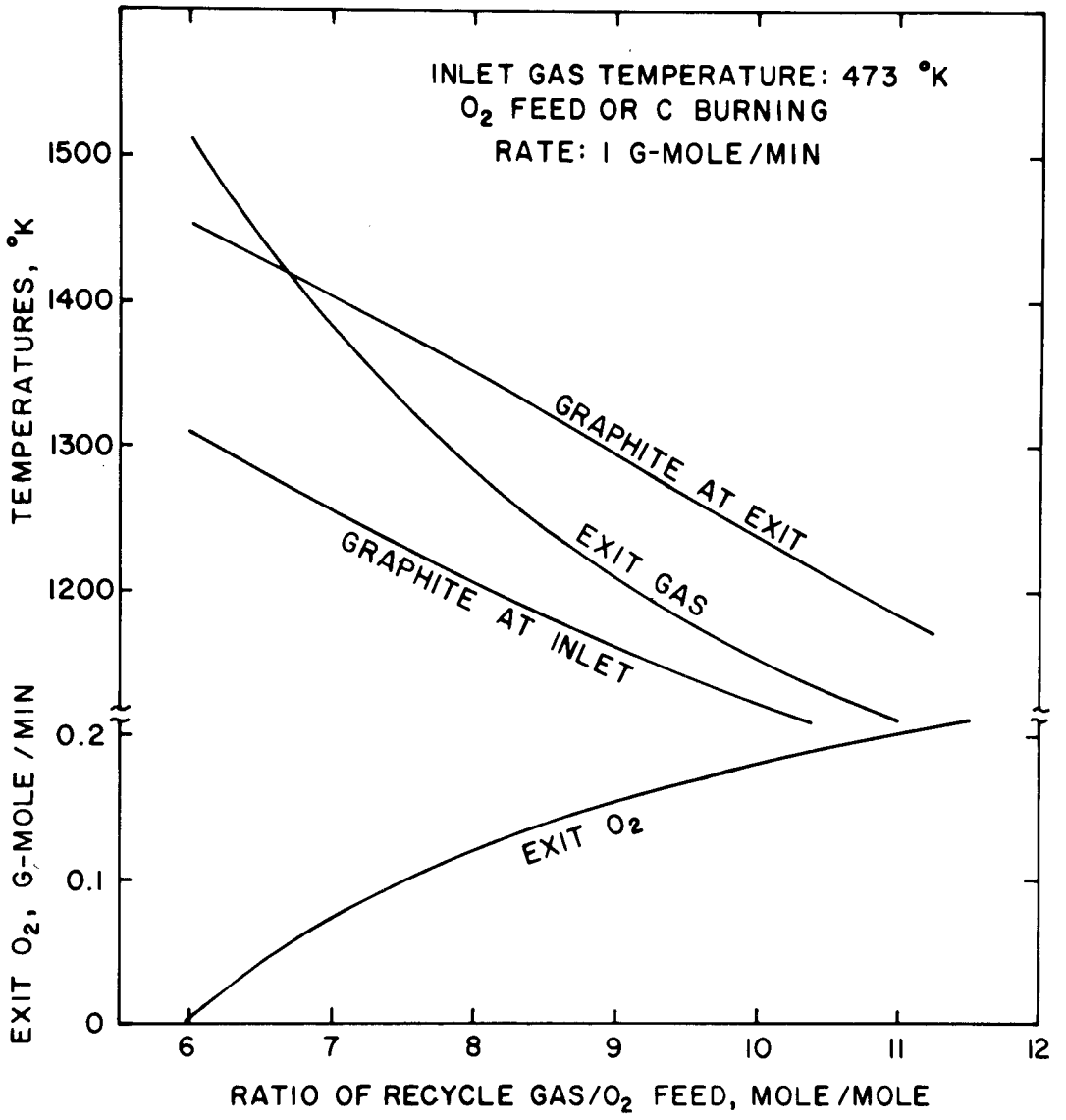

Fig. 5. Calculated Results for an Adiabatic WBB with Recycle of CO_2-O_2 and 1 g-mole/min O_2 Feed.

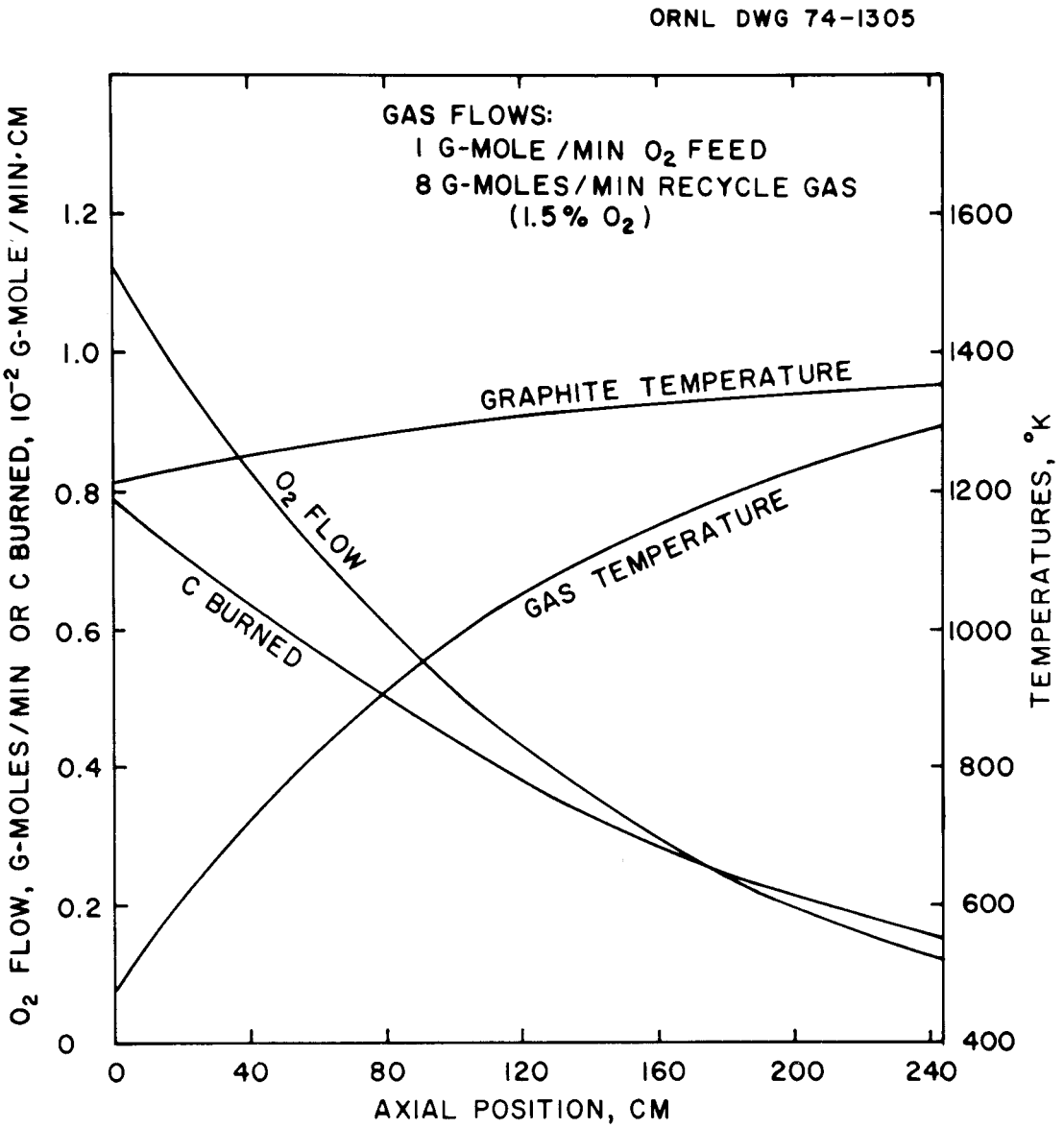

Fig. 6. Calculated Results for an Adiabatic WBB with Recycle of CO_2-O_2 vs Position in Burner (Recycle Ratio = 8).

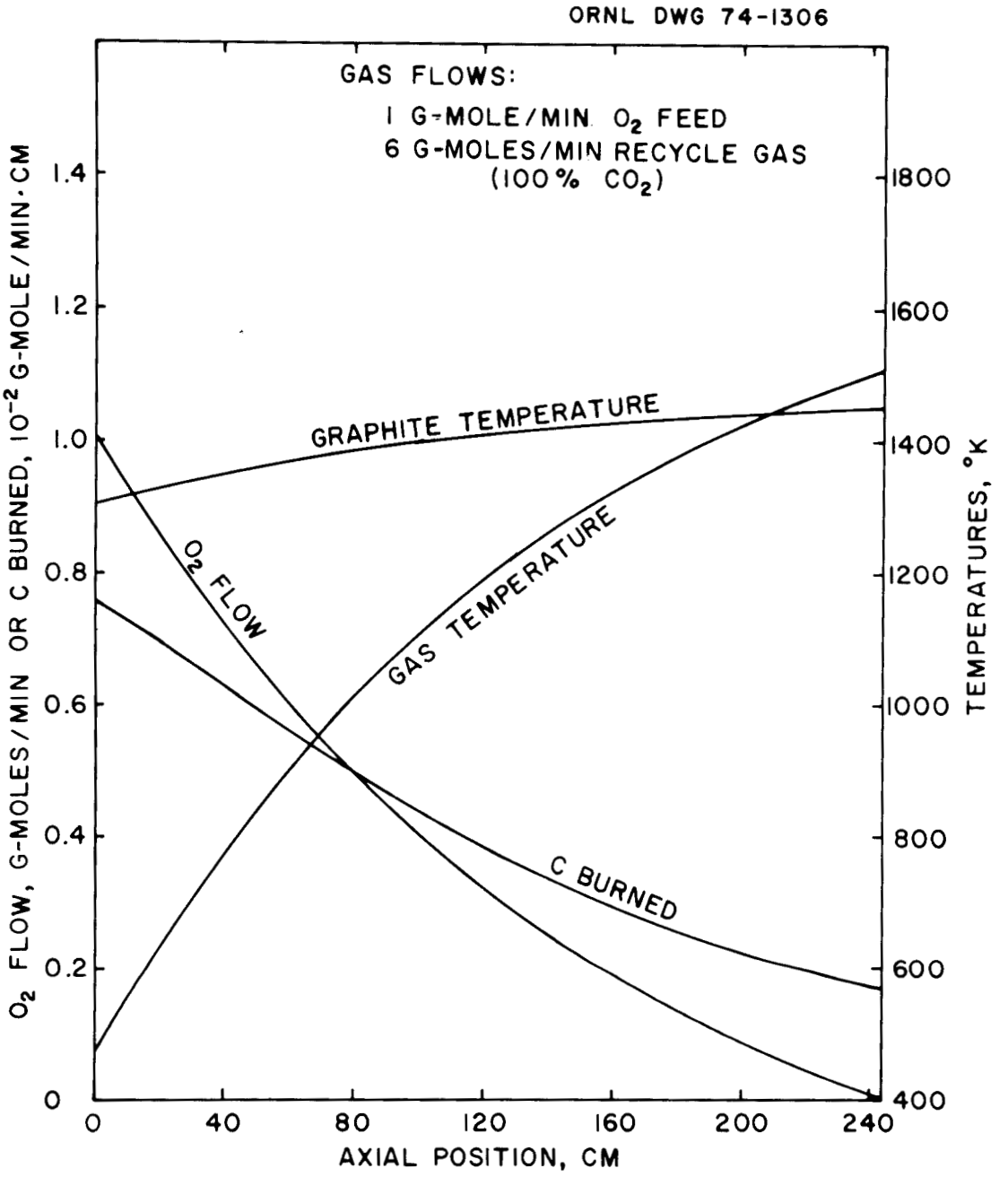

Fig. 7. Calculated Results for an Adiabatic WBB with Recycle of CO_2-O_2 vs Position in Burner (Recycle Ratio = 6).

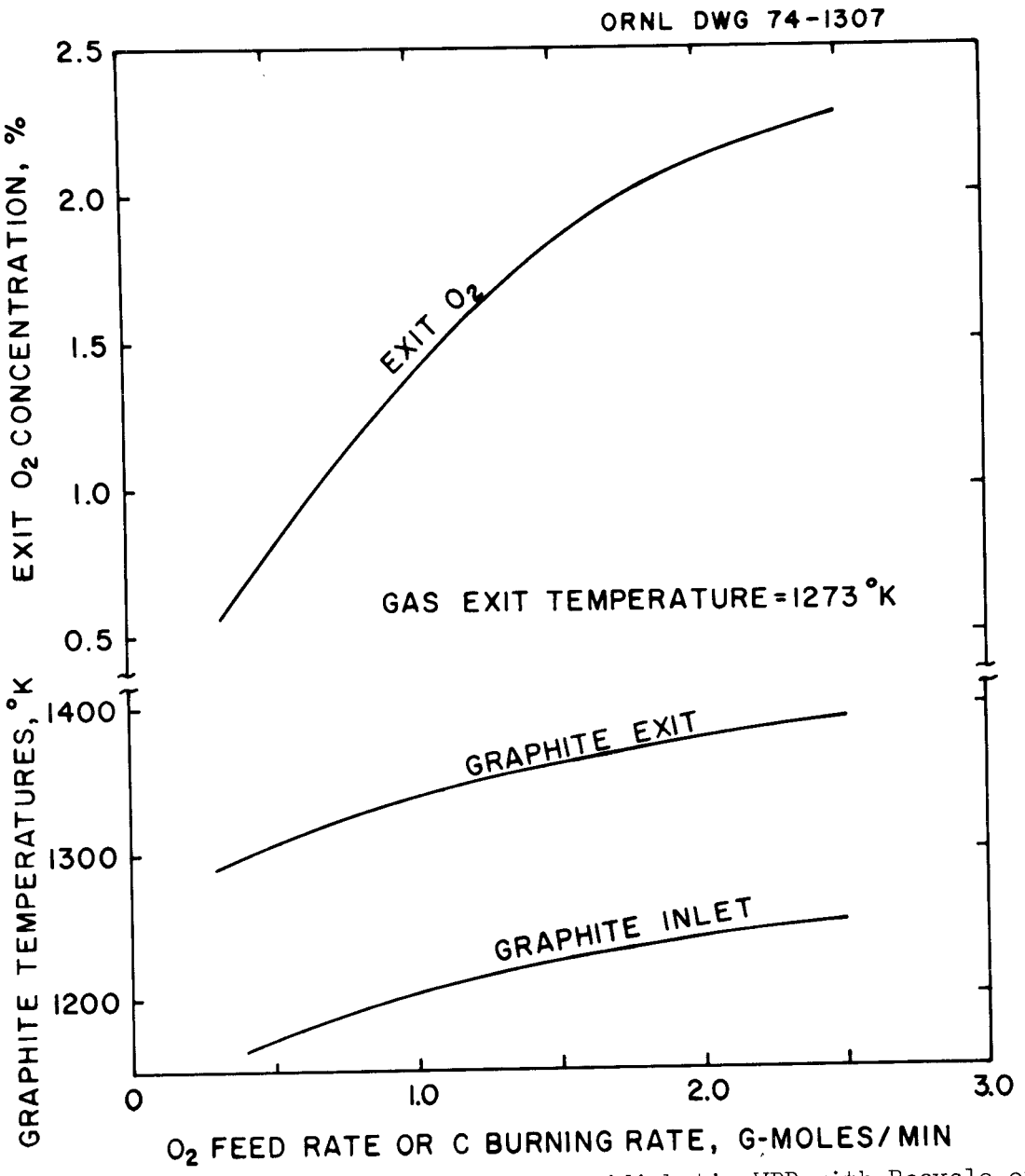

Fig. 8. Calculated Results for an Adiabatic WBB with Recycle of CO_2-O_2 and a Gas Exit Temperature of 1000°C.

this exit gas temperature. For an exit gas temperature of 1000°C (1273°K) and an O_2 feed rate of 1 g-mole/min, the calculated ratio is 8.1 (Fig. 5); the exit gas would contain about 1.3 vol % O_2. The calculated results vs position are shown for approximately this ratio (Fig. 6). The O_2 feed rate or carbon-burning rate can be varied over a wide range with acceptable variations in graphite temperatures and exit O_2 concentrations (Fig. 8). In a practical WBB, the selected control temperature (gas exit) must be sufficiently high to keep all the graphite hot enough to burn. Any heat losses will result in lower temperatures than those from the adiabatic calculations. The heat capacity of the graphite is a stabilizing effect. If a maximum value is specified for the inlet O_2 concentration (∿16%), overheating of the graphite is impossible.

The effect of burner length is shown by comparing results for three blocks (Fig. 6) with those for one block (Fig. 9). The O_2 concentrations are much higher throughout to give the same total carbon burning rate in one-third the length, and the exit O_2 concentration is 8.1% for one block as compared with 1.5% for three blocks. The graphite temperatures are 200 to 250°C higher for one block than for three blocks. The inlet O_2 concentration for one block is high enough to permit temperatures to become excessive if localized conditions allow complete utilization of O_2; that is, the gas does not have sufficient heat capacity to limit the temperature if all the O_2 reacts to form CO_2. Overall, the calculations indicate that the carbon burning rate of 1 kg/min for a single block requires conditions near the allowable limits for temperatures and would make verification by careful experimentation mandatory.

5.3 Results for Recycle of CO_2-CO to an Adiabatic Whole-Block Burner

When the graphite temperatures in the adiabatic WBB are allowed to increase, the reaction of CO_2 with carbon becomes of increasing importance until it is finally the controlling reaction. This occurs because the concentration of O_2 is much lower than that of CO_2. If mass transfer is controlling, the CO_2 has a much larger concentration difference and thus a higher rate of mass transfer; therefore, the practical rates of carbon

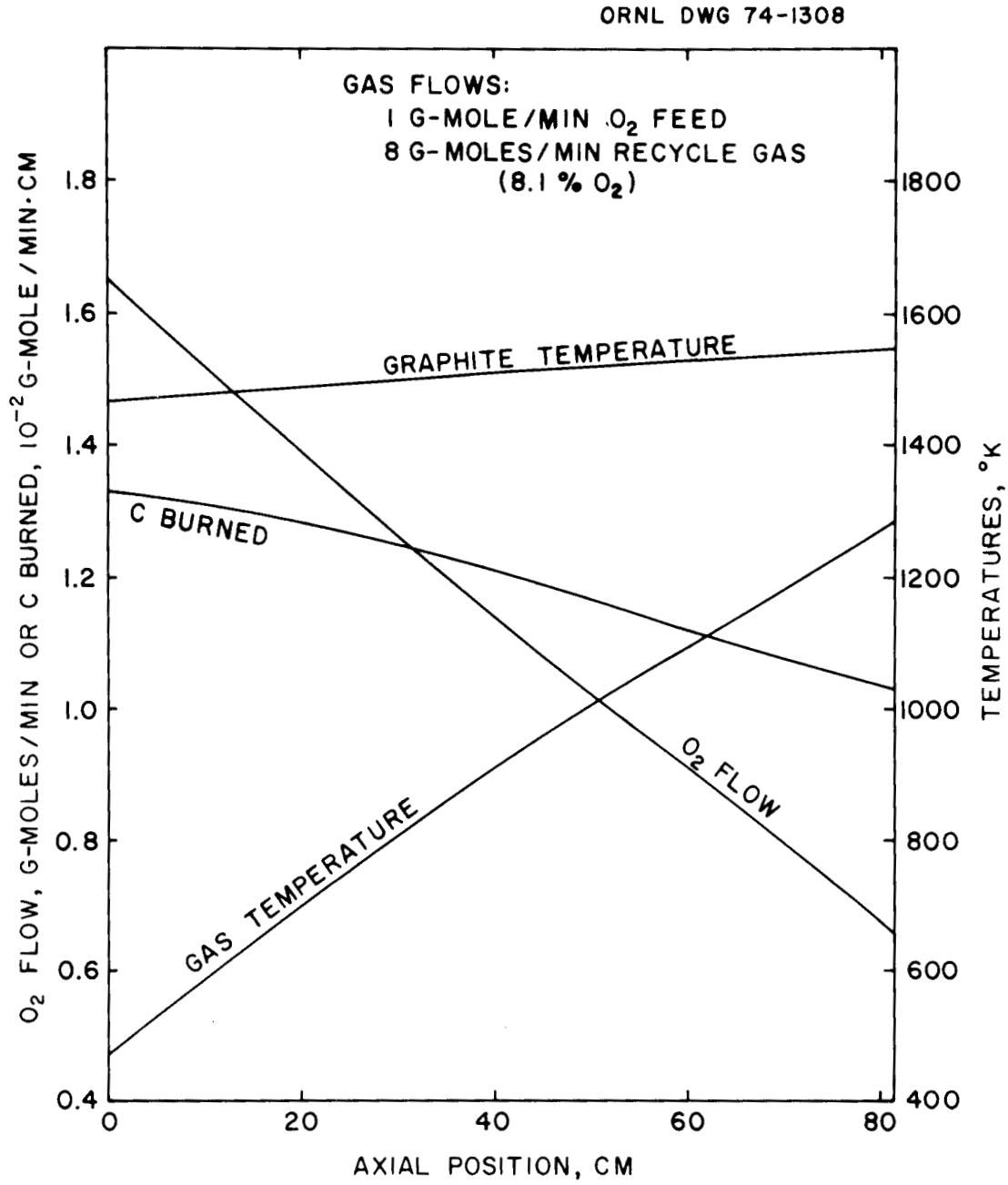

Fig. 9. Calculated Results for an Adiabatic WBB with Recycle of CO_2-O_2 (Single Block, Recycle Ratio = 8).

burning may be much higher if high exit CO concentrations are allowable.

Steady-state conditions imply that the flow of burner exit gas be divided in order to supply both the recycle stream to the burner inlet and an exit flow in which the amount of O_2 discharged (as CO_2, CO, or O_2) must equal the O_2 feed rate. This removal of O_2 can be accomplished either through preferential removal of CO_2 (one mole of CO_2 per mole of O_2 feed) or by removal of a stream of the same composition as the burner exit gas. For conditions of interest with O_2 in the exit stream, the low O_2 concentrations ($\leq 2\%$) result in the same qualitative conclusions for either case. For example, for a flow of 10 g-moles/min of exit gas containing 1.60% O_2, removal of 1 g-mole of CO_2 gives a recycle stream of 1.78% O_2. Since the recycle of CO_2-CO may involve high CO contents, the choice of recycle assumption has more effect for these compositions. The results presented assume a preferential removal of CO_2. A KALC[8] type of off-gas treatment could preferentially remove CO_2 as a condensed liquid with recycle of CO or O_2 to the burner.

Calculated steady-state results are shown for three aligned blocks or a 243-cm length of coolant channel. As the recycle CO concentration increases, the CO burner temperature and the maximum graphite temperature also increase, as would be expected (Fig. 10). Since the CO has a smaller heat capacity than CO_2 and the exit gas temperature decreases as the CO content increases (the production of CO is endothermic), the recycle gas/O_2 feed ratio also increases as the CO content increases. Two sets of values vs burner position for 10% CO (Fig. 11) and 30% CO (Fig. 12) further illustrate these effects. For 30% CO, the steady-state recycle gas ratio is 7.0 and the maximum temperatures are in the CO burner or burner inlet. For 10% CO, the steady-state recycle gas ratio is 6.2 and the maximum temperatures are at the middle of the burner. The carbon burning rate decreases by less than a factor of 4 over the length of the burner for 10% CO recycle. For a CO content of $\geq 30\%$, the carbon burning is all by reaction with CO_2, and the carbon burning rate is over ten times higher at the inlet than the exit. The graphite temperatures for the recycle of CO_2-CO depend on the rate constant for the reaction of CO_2 with carbon

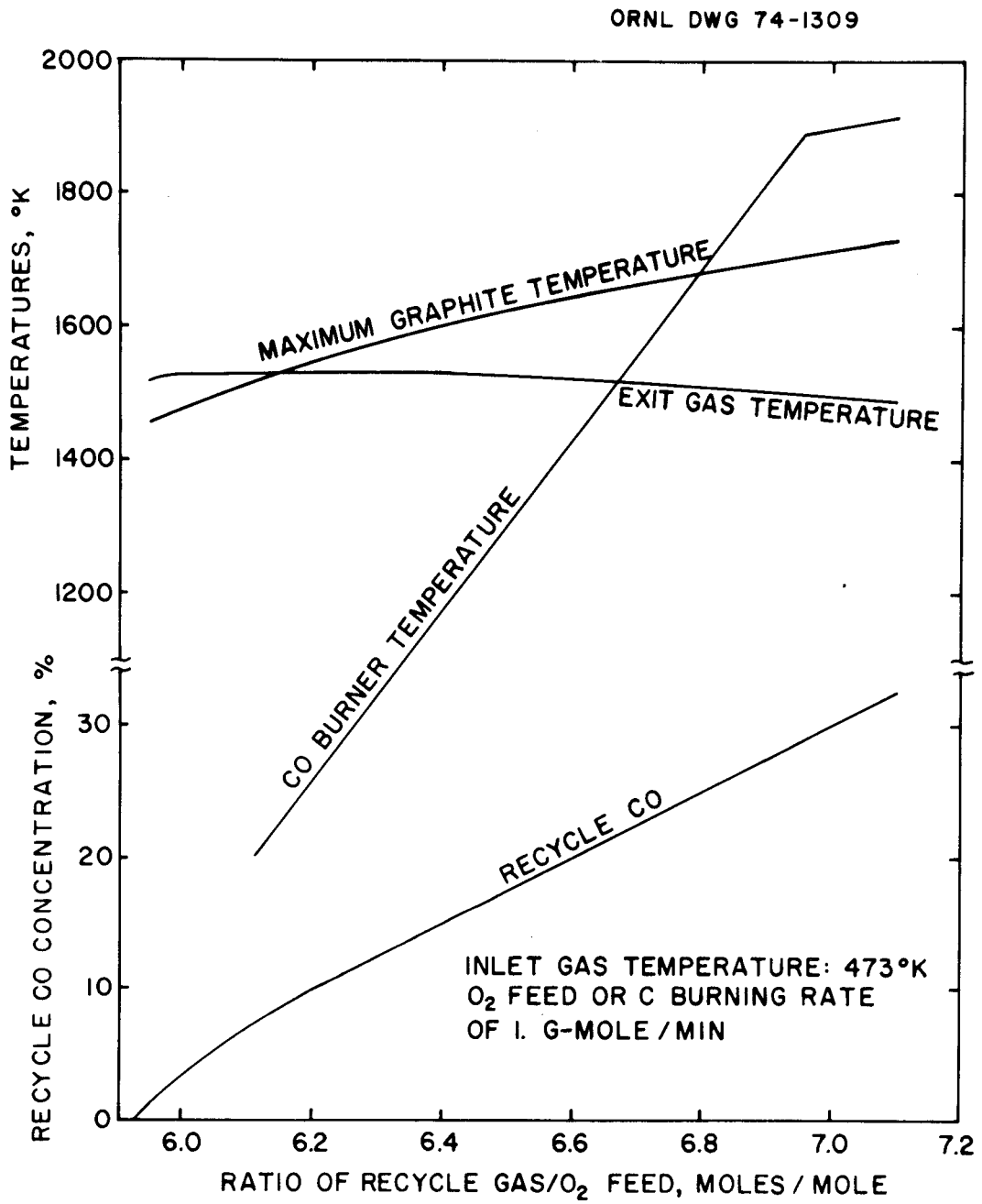

Fig. 10. Calculated Results for an Adiabatic WBB with Recycle of CO_2-CO and 1 g-mole/min O_2 Feed.

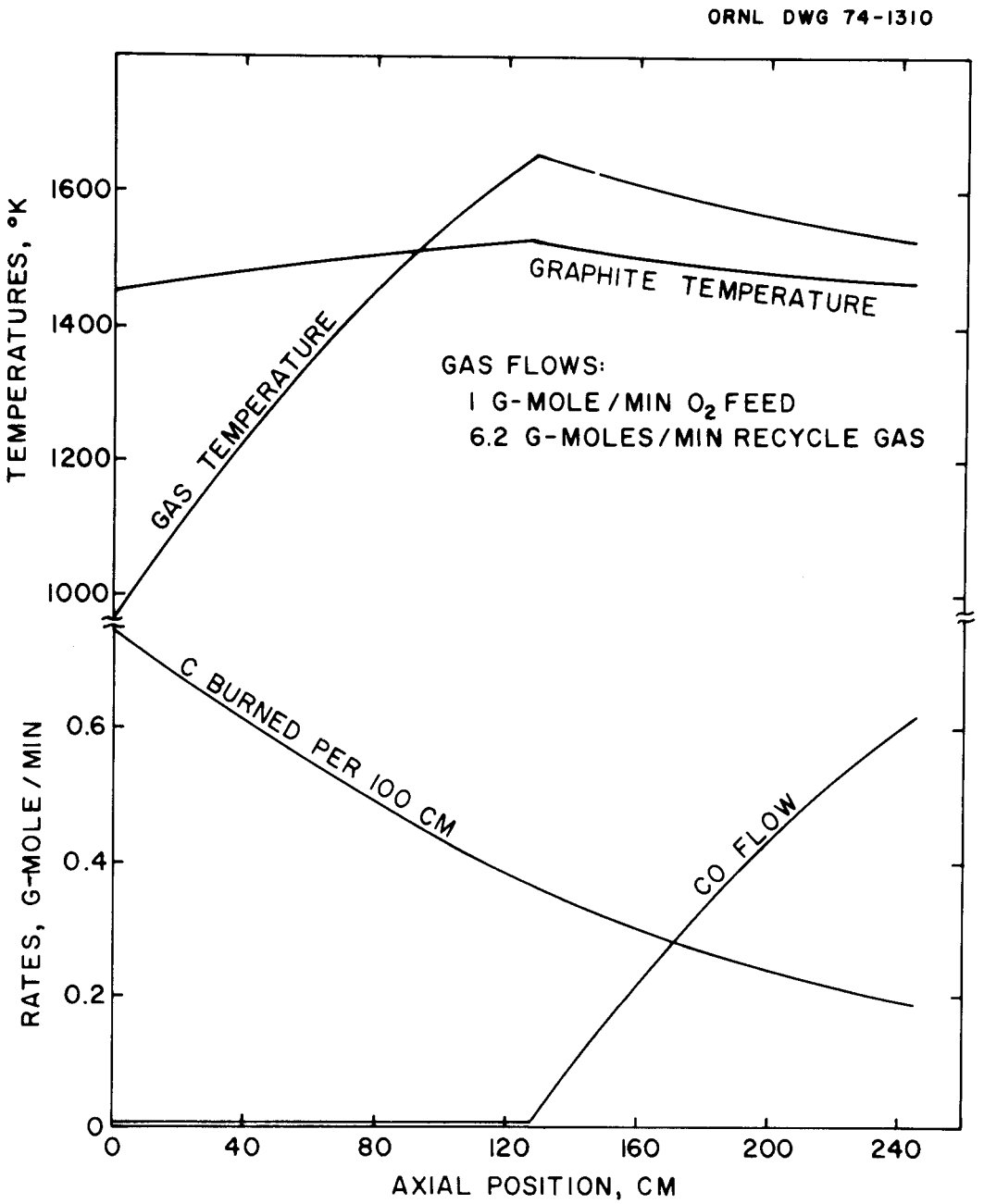

Fig. 11. Calculated Results for an Adiabatic WBB with Recycle of CO_2-CO vs Position in Burner (Recycle CO Concentration of 10%).

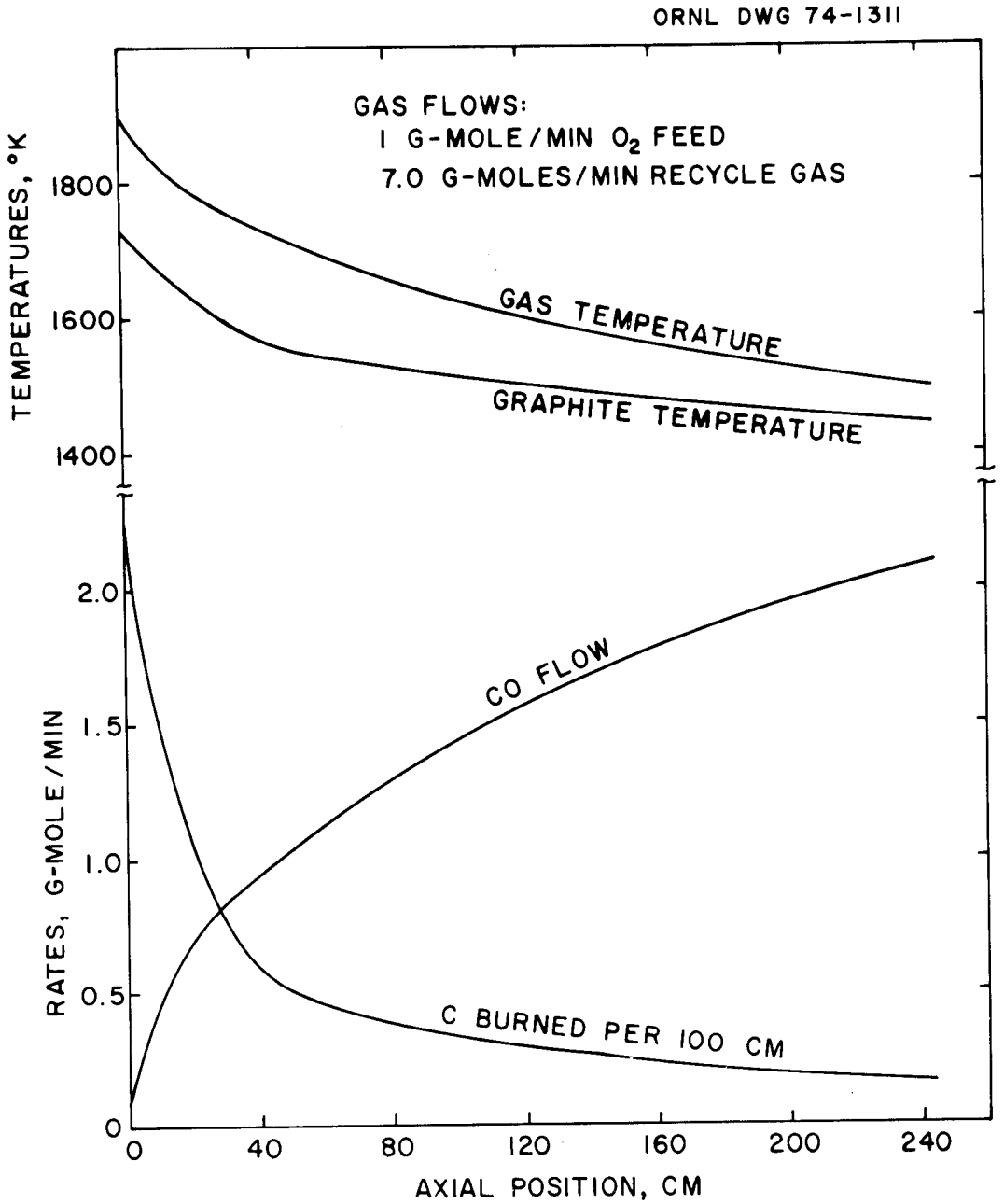

Fig. 12. Calculated Results for an Adiabatic WBB with Recycle of CO_2-CO vs Position in Burner (Recycle CO Concentration of 30%).

[Eq. (5)]. However, the effect on the calculated results is simply a shift in the temperature scale of the curves; the slope of the curves and the qualitative conclusions are unchanged.

The CO burner temperature appears to be the most reasonable control variable. The control is actually a second-order effect which is not clear from an inspection of Fig. 10. Consider a burner system at steady state, for example, the conditions corresponding to a 1250°K CO burner temperature in Fig. 10. Assume that we decrease the CO burner set point to 1200°K. Then the 1250°K burner temperature is too high, and the controller should increase the recycle gas rate to cool the burner system. The first-order effect is a small, but insignificant, increase in CO burner temperature since the CO content of the recycle gas is still 10%. However, the O_2 content of the gas entering the burner is decreased because there is more diluent gas and more CO to react with O_2. (The additional recycle gas is almost enough to soak up the additional heat, thereby giving the insignificant temperature increase mentioned above.) The lower O_2 content at the same CO burner temperature produces less heat in the burner and a lower CO content in the exit gas. When this recycle gas of low CO content reaches the CO burner, the recycle gas ratio will have to be decreased below the original value in order to maintain the CO burner temperature. When the graphite in the burner has cooled, the new steady-state values will be those shown in Fig. 10. The control constants will have to be set to prevent a stable oscillation. This should not be difficult since the large heat capacity of the graphite blocks will result in a long time constant for the control behavior.

The change in CO burner temperature with recycle ratio can be calculated for the adiabatic burner. If the recycle ratio is increased 2% for 10% CO recycle, the adiabatic exit CO concentration would be 8.7% and the CO burner temperature would decrease by about 60°C. This change would not occur in one cycle of gas since the graphite would have to cool down to the new steady-state temperatures. This heat from the graphite would slow down the change in CO concentration of the exit gas.

The effect of burner length is shown for 30% CO in the recycle gas by comparing the results for three blocks (Fig. 12) with those for one block (Fig. 13). The very high gas and graphite temperatures required to achieve a carbon burning rate of 1 kg/min for one block are probably not practical operating conditions.

6. RECOMMENDED EXPERIMENTAL STUDIES

The concept of an adiabatic burner with recycle of cooled gas should be verified by operation of an experimental unit. Since adiabatic operation implies no heat transfer through the wall, valid results would be possible with either a full block or a single coolant channel. For a full block, the adiabatic operation is easily approximated by using a ceramic liner inside cooled metal walls; the transfer of heat through the ceramic would be a small percentage of the heat produced by burning and the burner would be approximately adiabatic. For a single coolant channel, the ceramic liner would have to be selected to minimize heat losses or a hot metal wall would be necessary. A full-scale burner designed for whole blocks could also provide information on mechanical problems but would require large equipment (about 500 scfm of gas recycle) and a costly supply of HTGR blocks. Most of the blocks could be graphite with coolant holes only--no fuel.

The experimental adiabatic burner should be provided with temperature and composition measurements as required to verify the calculated results. A computer program should be written to include the change in coolant channel diameter as the carbon is burned. Comparison of the coolant channel dimensions after partial burning with calculated values would provide a somewhat independent check on the methods of calculation.

The flowsheet for an experimental system would be that shown as Fig. 3 with selected accessory concepts from Fig. 4. No attempt will be made to specify equipment components in this report since any selection might also consider their testing for use with a remotely operated burner. General burner requirements, as evaluated elsewhere,[3] would also be considered.

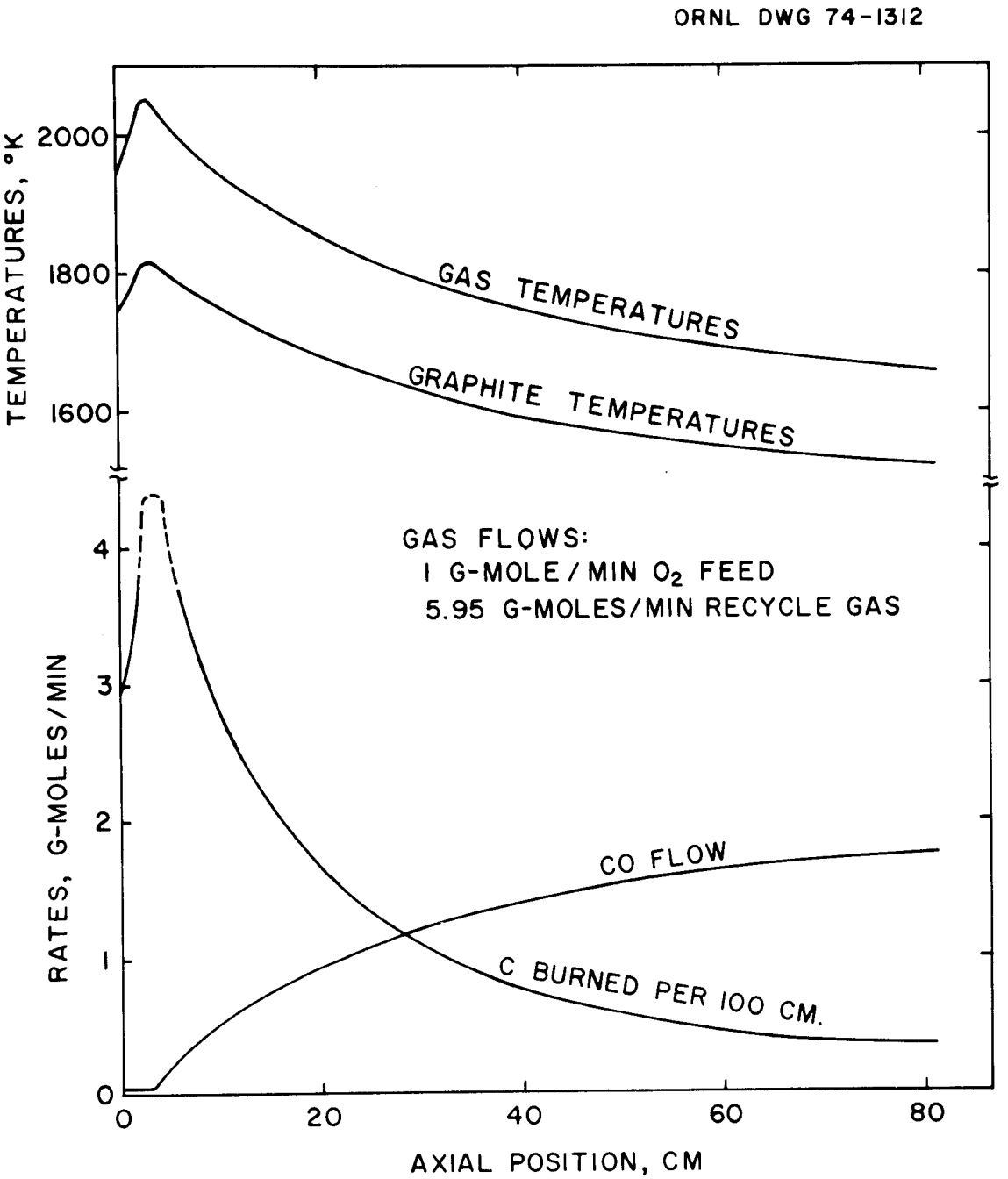

Fig. 13. Calculated Results for an Adiabatic WBB with Recycle of CO_2-CO vs Position in Burner (Recycle Concentration of 30% CO, 81-cm length).

7. REFERENCES

1. C. D. Scott, Ind. Eng. Chem., Process Design Develop. 5, 223-33 (July 1966).

2. H. Barnert-Wiemer, HTGR Fuel Reprocessing: Preliminary Experimental Studies of a Whole-Block Burner, GCR-TU-7412 (in publication).

3. J. W. Snider and D. C. Watkin, An Evaluation of HTGR Primary Burning, ORNL-TM-4520 (in publication).

4. T. G. Clark et al., Chap. 14 in Nuclear Graphite, ed. by R. E. Nightingale, Academic, New York, 1962.

5. E. E. Petersen and C. C. Wright, Ind. Eng. Chem. 47(8), 1624-29 (1955).

6. E. E. Petersen et al., Ind. Eng. Chem. 47(8), 1629-30 (1955).

7. E. E. Petersen, Ind. Eng. Chem. 47(8), 1630-34 (1955).

8. M. E. Whatley, Calculations on the Performance of the KALC Process, ORNL-4859 (May 1973).

8. APPENDIX

Details of the methods of calculation used in this study are presented here. Some results are also included.

8.1 Calculated Results Using Radiant Heat Transfer

Some calculations were made in which terms were included for transfer of radiant heat to cold burner walls. These were intended to represent the tests made with the Unit Operations experimental one-sixth-block burner.[2] The results indicated that a simplified model was of limited use for this complex heat transfer problem; however, two conclusions did appear to be justified.

The first conclusion is that the combination of a cool CO_2-O_2 inlet gas and radiant heat transfer can easily cool the inlet end of the block below the temperatures required for high rates of reaction; that is, the burner will "go out." High gas flow rates supply more O_2 without affecting the radiant heat transfer calculations and thus favor burning. The CO_2-O_2 mixtures containing 25 or 33% O_2 may be too low to permit burning to be continued with radiant cooling. (This difficulty is not encountered with an adiabatic reactor.)

The second conclusion is that high burning rates with feeds of high O_2 concentrations (more than one-third O_2) are almost certain to result in excessive block temperatures. If the O_2 is consumed at the inlet end of the block, the radiant heat fluxes would require temperatures greater than 2000°K. The simplified model indicates that reaction continues down the coolant holes. Near the middle of the block, the geometry becomes poor for radiant heat transfer and conduction would require very large temperature differences.

These two conclusions in combination indicate that allowable burning rates are lower for a nonadiabatic burner than for an adiabatic burner. The temperature differences required for heat transfer become so large for high burning rates that part of the graphite is either unacceptably hot or too cool to permit burning to be continued at practical rates.

8.2 Computer Program

Computer programs were written so that specified conditions at the burner inlet could be used as the basis for calculating values for incremental lengths to the burner outlet. The programs were written in BASIC language for the ORNL PDP-10 time-sharing system.

The general approach was as follows:

(1) A hole diameter, graphite length, and incremental length are specified.

(2) The inlet gas temperature and flows (O_2,CO, CO_2) are designated.

(3) The O_2 and CO react to leave only one of these gases in excess. A new temperature and revised flow rates are calculated.

(4) The mass transfer of O_2 to the graphite surface is calculated using a zero surface concentration and is set equal to the rate of CO_2 formation.

(5) A rate of reaction of CO_2 with carbon is calculated using a graphite temperature equal to the gas temperature.

(6) A graphite temperature is calculated to give a rate of heat transfer to the gas equal to the sum of the two heats of reaction.

(7) Steps (5) and (6) are repeated using the calculated graphite temperature in (5) until the calculation converges.

(8) A new gas temperature is calculated from the heats of reaction and the gas heat capacity.

(9) Steps (3) through (8) are repeated until the coolant channel exit is reached. Results are printed at selected intervals.

A typical program is shown in Table 1. The simple loop for calculation of graphite temperatures (steps 310 to 350) did not converge for some high graphite temperatures; consequently, a more complex loop was used in these cases. It should be possible to use the burning rates to calculate coolant hole diameters vs time and position. This modification will be added if development of whole-block burners is continued; however, it has not yet been attempted.

Table 1. A Computer Program for an Adiabatic Whole-Block Burner: ORNL Time-sharing System in PDP-10 Basic Language

```
10 PRINT "WHOLE BLOCK BURNER CALC FOR O2-CO2-CO"
20 READ D,L,D1
30 PRINT "G0, G1, G2, AND T0 ARE";
40 INPUT G0,G1,G2,T0
50 LET T2=T0
60 LET T3=T9=1500
70 LET N=0
80 PRINT "CO2 FLOW", "CO FLOW", "O2 FLOW", "GAS T", "BLOCK T"
90 PRINT G2,G1,G0,T2,T3,
100 IF G0>=0.5*G1 THEN 130
110 LET R3=G0
120 GO TO 140
130 R3=G1/2
140 LET G0=G0-R3
150 LET G1=G1-2*R3
160 LET G2=G2+2*R3
170 FOR X=1 TO 3
180 LET T8=(T0+T2)/2
190 T0=T2+134820*R3/(G0*(7.6+.8E-3*T8)+G1*(7.2+.8E-3*T8)+G2*(12.1+1.2E-3
*T8))
200 NEXT X
210 LET T2=T0
220 V2=32E-6+0.38E-6*T2
230 R6=D*(44*G2+28*G1+32*G0)/(60*V2*0.785*D↑2)
240 R4=V2*22400*(T2/273)/(0.94*44)
250 K2=(12.1+1.2E-3*T2)*V2/(0.75*44)
260 H2=K2*0.023*R6↑0.8*0.881/D
270 D3=K2/H2
280 C0=G0/((G0+G1+G2)*(22400*T2/273))
290 C2=G2/((G0+G1+G2)*22400*T2/273)
300 R0=R4*C0*60/D3
310 R2=0.30E6*EXP(-48000/(T3+T9))/60
320 D2=(-94030*R0+40790*R2)/(H2*60)
330 LET T9=T3
340 T3=T2-D2
350 IF ABS(T9-T3)>2 THEN 310
360 A=D*3.1416*D1
370 LET R5=(-94030*R0+40790*R2)*A
380 R8=(R0+R2)*A/D1
390 LET G0=G0-R0*A
400 LET G1=G1+2*R2*A
410 LET G2=G2+R0*A-R2*A
420 LET T2=T2-R5/(G0*(7.6+0.8E-3*T2)+G1*(7.2+0.8E-3*T2)+G2*(12.1+1.2E-3*
T2))
430 LET N=N+1
440 IF (N+18)/20-INT((N+18)/20)=0 THEN 460
450 GO TO 470
460 PRINT G2, R8, G0, T2, T3
470 IF N*D1>L THEN 500
480 GO TO 100
490 DATA 1.59, 243, 1
500 PRINT R6, G1, G0, K2, T9
510 END
```

ORNL-TM-4519
UC-77 — Gas-Cooled Reactor Technology

INTERNAL DISTRIBUTION

1. H. M. Abele
2. R. D. Ackley
3. J. L. Anderson
4. S. J. Ball
5. D. E. Bartine
6. S. E. Beall
7. R. L. Beatty
8. H. W. R. Beaujean
9. R. J. Beaver
10. M. Bender
11. L. L. Bennett
12. R. E. Blanco
13. A. L. Boch
14. E. G. Bohlman
15. E. S. Bomar
16. W. D. Bond
17. R. A. Bradley
18. R. B. Briggs
19. C. R. Brinkman
20. R. E. Brooksbank
21. K. B. Brown
22. O. W. Burke
23. W. A. Bush
24. J. P. Callahan
25. D. A. Canonico
26. A. J. Caputo
27. J. M. Chandler
28. C. E. Clifford
29. W. G. Cobb
30. H. E. Cochran
31. H. D. Cochran, Jr.
32. T. E. Cole
33. E. L. Compere
34. J. A. Conlin
35. J. H. Coobs
36. W. H. Cook
37. D. Costanzo
38. W. B. Cottrell
39. J. A. Cox
40. F. L. Culler
41. J. E. Cunningham
42. F. C. Davis
43. R. I. Deaderick
44. H. J. de Nordwall
45. B. C. Duggins
46. F. F. Dyer
47. D. A. Dyslin
48. W. P. Eatherly
49. R. B. Evans, III
50. J. I. Federer
51. G. G. Fee
52. D. E. Ferguson
53. B. C. Finney
54. C. L. Fitzgerald
55. R. W. Glass
56. D. L. Gray
57. R. J. Gray
58. B. L. Greenstreet
59. W. R. Grimes
60. A. G. Grindell
61-75. P. A. Haas
76. C. C. Haws, Jr.
77. R. L. Hamner
78. W. O. Harms
79. F. E. Harrington
80. C. B. Haynie
81. J. W. Hill
82. R. M. Hill, Jr.
83. H. W. Hoffman
84. F. J. Homan
85. O. J. Horne
86. J. P. Jarvis
87. J. D. Jenkins
88. D. R. Johnson
89. M. J. Kania
90-129. P. R. Kasten
130. R. J. Kedl
131. H. T. Kerr
132. W. J. Lackey
133. J. M. Leitnaker
134. K. H. Lin
135. T. B. Lindemer
136. M. H. Lloyd
137. E. L. Long, Jr.
138. A. W. Longest
139-148. A. L. Lotts
149. R. S. Lowrie
150. R. E. MacPherson

151. A. P. Malinauskas
152. W. J. Martin
153. W. R. Martin
154. H. C. McCurdy
155. W. T. McDuffee
156. D. L. McElroy
157. L. E. McNeese
158. B. H. Montgomery
159. M. T. Morgan
160. F. R. Mynatt
161. F. H. Neill
162. J. P. Nichols
163-167. K. J. Notz
168. L. C. Oakes
169. M. F. Osborne
170. R. L. Pearson
171. W. H. Pechin
172. T. W. Pickel
173. C. B. Pollock
174. H. Postma
175. M. K. Preston
176. R. H. Rainey
177. D. P. Reid
178. P. L. Rittenhouse
179. J. M. Robbins
180. G. C. Robinson
181. M. W. Rosenthal
182. P. Rubel
183. J. E. Rushton
184. A. D. Ryon
185. J. P. Sanders
186. C. D. Scott
187. J. D. Sease
188. J. H. Shaffer
189. R. L. Shepard
190. G. M. Slaughter
191-196. J. W. Snider
197. I. Spiewak
198. R. S. Stone
199. J. R. Tallackson
200. V. J. Tennery
201. K. R. Thoms
202. M. Tobias
203. D. B. Trauger
204. W. E. Unger
205. I. J. Urza
206. K. H. Valentine
207-216. V. C. A. Vaughen
217. J. E. Van Cleve
218. T. N. Washburn
219. D. C. Watkin
220. J. R. Weir
221. J. C. White
222. G. D. Whitman
223-236. R. G. Wymer
237-238. Central Research Library
239. Document Reference Section
240-249. Laboratory Records
250. Laboratory Records, RC
251. ORNL Patent Office
252. J. C. Frye (Consultant)
253. C. H. Ice (Consultant)
254. J. J. Katz (Consultant)
255. E. A. Mason (Consultant)
256. Peter Murray (Consultant)
257. R. B. Richards (Consultant)

EXTERNAL DISTRIBUTION

258. Research and Technical Support Division, USAEC Oak Ridge Operations Office, P. O. Box E, Oak Ridge, Tenn. 37830
259. USAEC-RRD Senior Site Representative, Oak Ridge National Laboratory, P. O. Box X, Oak Ridge, Tenn. 37830
260-261. Director, USAEC Division of Reactor Research and Development, Washington, D. C. 20545
262-415. For distribution as shown in TID-4500 under UC-77, Gas Cooled Reactor Technology (25 copies — NTIS)