OAK RIDGE NATIONAL LABORATORY LIBRARIES
3 4456 0555903 5

CENTRAL RESEARCH LIBRARY

ORNL-TM-4586

Cy 56

THE STATE-OF-THE ART IN NON-DESTRUCTIVE ASSAY SYSTEMS AND THEIR APPLICATIONS TO AN LMFBR AQUEOUS FUEL REPROCESSING PLANT

F. Shahrokhi
J. C. Robinson
J. T. Mihalczo
N. J. Ackermann, Jr.

OAK RIDGE NATIONAL LABORATORY
CENTRAL RESEARCH LIBRARY
DOCUMENT COLLECTION
LIBRARY LOAN COPY
DO NOT TRANSFER TO ANOTHER PERSON
If you wish someone else to see this document, send in name with document and the library will arrange a loan.
UCN-7969
(3 3-67)

OAK RIDGE NATIONAL LABORATORY
OPERATED BY UNION CARBIDE CORPORATION • FOR THE U.S. ATOMIC ENERGY COMMISSION

Printed in the United States of America. Available from
National Technical Information Service
U.S. Department of Commerce
5285 Port Royal Road, Springfield, Virginia 22151
Price: Printed Copy $5.45; Microfiche $1.45

This report was prepared as an account of work sponsored by the United States Government. Neither the United States nor the United States Atomic Energy Commission, nor any of their employees, nor any of their contractors, subcontractors, or their employees, makes any warranty, express or implied, or assumes any legal liability or responsibility for the accuracy, completeness or usefulness of any information, apparatus, product or process disclosed, or represents that its use would not infringe privately owned rights.

ORNL-TM-4586
UC-79c,-79d,
and-79m

Contract No. W-7405-eng-26

INSTRUMENTATION AND CONTROLS DIVISION

THE STATE-OF-THE ART IN NON-DESTRUCTIVE ASSAY SYSTEMS AND THEIR APPLICATIONS TO AN LMFBR AQUEOUS FUEL REPROCESSING PLANT

F. Shahrokhi* J. C. Robinson* J. T. Mihalczo
and N. J. Ackermann, Jr.

A thesis presented to the Graduate Council of the University of Tennessee, Knoxville, in partial fulfillment of the requirements for the degree Master of Science.

August 1974

*Nuclear Engineering Department, the University of Tennessee, Knoxville.

NOTICE This document contains information of a preliminary nature and was prepared primarily for internal use at the Oak Ridge National Laboratory. It is subject to revision or correction and therefore does not represent a final report.

OAK RIDGE NATIONAL LABORATORY
Oak Ridge, Tennessee 37830
operated by
UNION CARBIDE CORPORATION
for the
U.S. ATOMIC ENERGY COMMISSION

3 4456 0555903 5

OAK RIDGE NATIONAL LABORATORY LIBRARIES

ACKNOWLEDGMENTS

This research was performed at the Oak Ridge National Laboratory under the sponsorship of the U. S. Atomic Energy Commission under contract with the Union Carbide Corporation.

The author expresses his deep appreciation to Dr. J. C. Robinson who served as advisor of the research; his interest, encouragement, and guidance is sincerely appreciated.

The contributions of many other individuals in making this work possible are gratefully acknowledged.

Dr. N. J. Ackermann, Jr. first suggested the topic and initiated the research.

Dr. J. T. Mihalczo provided stimulating discussion and helpful suggestions throughout this work.

A special thanks is extended to Dr. R. B. Walton of Los Alamos Scientific Laboratory who reviewed Chapter II of this volume and made valuable comments.

The staff of the Chemical Technology Division of the Oak Ridge National Laboratory who supplied all the information about the Aqueous Fuel Reprocessing Plant, particularly Dr. W. E. Unger, Dr. F. E. Harrington, and Dr. S. D. Clinton.

The author would like to thank Mrs. Peggy Johnson and Mrs. Nita Rye who typed the draft and final copy of this volume.

I would also like to thank General Y. Shahrokhi, my father, for his support and encouragement.

Finally, to my wife, Sandy, and our child, Simmine, for their understanding and affection, this volume is lovingly dedicated.

ABSTRACT

A state-of-the art study for determination of fissile and fertile isotopic contents of nuclear fuel materials without destruction (non-destructive assay) was performed. The objective was to select and recommend nondestructive assay instrumentation and techniques for the purpose of criticality prevention, safety, safeguards, process control, and accountability throughout a Liquid Metal Fast Breeder Reactor fuel reprocessing plant, namely the Aqueous Fuel Reprocessing Plant (AFRP) proposed by the Chemical Technology Division of the Oak Ridge National Laboratory.

The nondestructive instrumentation of a presently operating fuel reprocessing plant is described. These instruments (techniques) have been proven useful through experience; therefore, they provide guidelines for the selection of instrumentation for the proposed AFRP.

The overall flow diagram of the reference AFRP is then discussed in order to select and identify the desired assay area.

It was concluded that the present state-of-art in nondestructive techniques are inadequate for most of the assay requirements of the reference AFRP. The major problem is the assay for the nuclear fuels in the presence of high radiation backgroun (10^6 - 10^7 r/hr). Nondestructive techniques, namely active neutron interrogation counting either prompt neutrons or short lived high energy gamma rays and passive gamma ray spectroscopy detecting high energy gamma lines of (^{144}Ce + ^{144}Pr) which is directly related to the presence of plutonium, are recommended for further evaluation.

TABLE OF CONTENTS

CHAPTER		PAGE
I.	INTRODUCTION	1
	Nondestructive Assay	1
	LMFBR Fuel Reprocessing Plant	1
	The Scope of the Thesis	2
II.	NON-DESTRUCTIVE ASSAY TECHNIQUES (STATE-OF-ART)	4
	Introduction	4
	Passive Methods	5
	Passive Gamma Ray Method	5
	Passive Neutron Methods	8
	Active Methods	11
	Active Gamma Ray Interrogation	11
	Active Neutron Interrogation	14
III.	HANFORD FUEL REPROCESSING PLANT AND ITS NON-DESTRUCTIVE ASSAY SYSTEMS FOR PROCESS MONITORING	25
	Introduction	25
	Process Description of Hanford Purex Plant	25
	Non-destructive Assay Systems for Process Monitoring in the Hanford Purex Plant	32
	Gamma Monitors	33
	Alpha Monitors	36
	Neutron Monitors	37
	Monitoring Using Photometers	39
	Other Monitors	40
	Concluding Remarks	41

CHAPTER PAGE

IV. RECOMMENDATION FOR NON-DESTRUCTIVE INSTRUMENTATION FOR A REFERENCE LMFBR FUEL REPROCESSING PLANT 42

Introduction 42

General Description of ORNL Aqueous Fuel Reprocessing Plant 43

Identification and Selection of Assay Points 52

Non-destructive Assay Philosophy 53

Major Assay Areas 54

Proposed Use of Various Non-destructive Techniques in the Reference AFRP 58

V. SUMMARY 76

LIST OF REFERENCES 79

LIST OF TABLES

TABLE		PAGE
I.	Gamma Ray Energy Lines of Some Fuel Materials	5
II.	Spontaneous Fission Rates	10
III.	Table of Abbreviation	28
IV.	Fission Product Activity of Spent LMFBR Core Fuel as a Function of Decay Time	59
V.	Cladding Activity of Spent LMFBR Core Fuel as a Function of Decay Time	63
VI.	Radioactivity of Actinides in Spent LMFBR Core Fuel as a Function of Decay Time	64
VII.	Isotopic Composition of Actinides in Spent LMFBR Core Fuel as a Function of Decay Time	66

LIST OF FIGURES

FIGURE PAGE

1. Prompt and Delayed Neutron Yields in Fissile and Fertile Materials Produced by Electrons of Energy E_e 13
2. Schematic Diagram Showing a Cross Section of a Cylindrical Assembly of the Type for Use in the Assay of Reactor Fuel Rods and Small Samples 23
3. First Decontamination and Partition Cycle in Line Monitors. . 27
4. Second and Third Plutonium Cycles in Line Monitors 30
5. Final Uranium Cycle in Line Monitors 31
6. A Block Diagram of Reference Fuel Reprocessing Plant 44
7. Flow Diagram of the Conceptual LMFBR Aqueous Fuel Reprocessing Plant. Process Options of Task 1-to-Task 4 46
8. Flow Diagram of the Conceptual LMFBR Aqueous Fuel Reprocessing Plant. Process Options of Task 5-to-Task 8 . 47
9. Flow Diagram of the Conceptual LMFBR Aqueous Fuel Reprocessing Plant. Process Options of Task 9 48
10. A Flow Diagram of the Reference Fuel Reprocessing Plant . . . 56
11. Total Gamma Ray Spectrum in Core (LMFBR-Fuel) 70
12. Total Gamma Ray Spectrum in Blanket (LMFBR-Fuel) 71

CHAPTER I

INTRODUCTION

The purpose of this thesis was to survey and recommend non-destructive assay instrumentation for safety, safeguards, accountability, and process control in a Liquid Metal Fast Breeder Reactor (LMFBR) fuel reprocessing plant. Background information is provided to familiarize the reader with the field of non-destructive assay and a proposed LMFBR fuel reprocessing plant.

Nondestructive Assay

The research and development in quantitative or qualitative measurement of fissile and/or fertile content of nuclear fuels without chemical destruction (nondestructive assay) has been underway for several years. Los Alamos Scientific Laboratory (LASL) and Gulf Radiation Technology (GRT) have been the pioneers of research in the nondestructive assay field. The principal behind nondestructive assay techniques is to use the inherent characteristics of nuclear fuels to measure the isotopic contents of the sample under investigation. The primary goal of research in the nondestructive assay field is the development of accurate assay techniques with a short assay time.

LMFBR Fuel Reprocessing Plant

The long-range economic success of the Liquid Metal Fast Breeder Reactor concept is dependent upon a relatively cheap fuel cycle. This has prompted the design of large-scale continuous mode aqueous fuel reprocessing plant. Such a plant would have an approximate throughput of five

metric ton of plutonium and uranium oxide fuel per day, serving 50 to 60 LMFBR's. The present day light water reactor fuel reprocessing plants cannot be used to reprocess LMFBR fuels without major modifications. The reasons are:

1. The high plutonium contents of LMFBR fuels. This would cause major criticality problems in LWR fuel reprocessing plants.
2. The high burn-up of LMFBR fuels. The LMFBR core fuels are expected to have up to 100,000 MWD/MT burn-up at discharge from the reactor. This would cause a substantial increase in fission product contents of LMFBR fuels over that of LWR fuels.
3. The sodium deposits on LMFBR fuels. Since sodium acts violently with water, present day LWR fuel reprocessing plants receiving and storage facilities are inadequate for LMFBR fuels handling.

Although present day fuel reprocessing plants are not economically and technically attractive for reprocessing LMFBR fuels, the vast operating experience with LWR fuel reprocessing plants and its major components and operating concepts such as Purex solvent extraction and other aqueous processes are available and can be adopted to LMFBR fuel reprocessing plant.

The Scope of the Thesis

This thesis consists of three parts: part one is the state of the art in nondestructive assay field. This part is primarily prepared using various reports in nondestructive assay field. Part two is the description of a presently operating fuel reprocessing plant namely Hanford Fuel

Reprocessing Plant and its nondestructive assay instrumentation. The purpose of part two is to familiarize the reader with the operation of an operating batch type LWR fuel reprocessing plant and its accompanying nondestructive instrumentation. Part three describes the Aqueous Fuel Reprocessing Plant designed by the Chemical Technology Division of the Oak Ridge National Laboratory for reprocessing of LMFBR fuels. The desired monitoring areas and the expected radioactive level of the fuel at each point are identified. Finally, the recommended nondestructive assay techniques for the identified assay areas are presented. In conclusion, the capabilities of the recommended nondestructive techniques are evaluated and future development areas in the nondestructive assay field are discussed.

CHAPTER II

NON-DESTRUCTIVE ASSAY TECHNIQUES (STATE-OF-ART)

I. INTRODUCTION

The research and development work in nondestructive assay of fissile and fertile materials has been underway for several years;[1,2,3] therefore, a great deal of experience has been gained and numerous techniques and instruments have been developed. This chapter describes the present state of development, and some demonstrated accuracy of various assay techniques. These techniques can be divided into two major categories which are: passive methods and active methods.

In the passive methods, the inherent characteristic radiations (such as: neutron, gamma, and alpha) emitted from the fissile or fertile materials are detected and compared to a known standard* to determine the amount and isotopic composition of fuel materials present in the sample.

In the active methods, the sample containing fissile and fertile materials is irradiated with neutrons or gamma rays to induce fission. The detection of the rate of fission events and a comparison with a known standard* will establish the amount of fuel materials present in the sample.

In the following sections, a brief discussion of the passive and active methods and their variations are presented.

---

*Known Standard: A sample similar in composition to the one under investigation with known amounts of fuel material.

II. PASSIVE METHODS

There are two types of passive methods which can be identified. The two types are passive gamma ray methods and passive neutron methods.

Passive Gamma Ray Method

In the passive gamma ray method (usually known as spectroscopy) one measures the gamma rays emitted by the radioactive fuel materials. Both ^{239}Pu and ^{235}U give off gamma rays of significant intensity. Table I shows some significant gamma lines of some fuel materials. In the materials which contain ^{238}U one measures lines of 1001 KeV and 767 KeV of $^{234}Pa_{91}$ which is a decay product (secular equilibrium can be assumed) of ^{238}U.

TABLE I

GAMMA-RAY ENERGY LINES OF SOME FUEL MATERIALS

Elements	Gamma Ray Energy Line (kev)
U-235	185
Pu-239	330→414
Pa-234*	1001, 767

*Pa-234 is a daughter product of ^{238}U.

Spectrometers with two types of detectors may be used: NaI scintillation detector and Ge(Li) solid state detector. The basic differences are:

1. Resolution: The Ge(Li) is capable of energy resolution of about 1% (FWHM* = 1 KeV), while NaI has about 10% (FWHM = 10 KeV) resolution.
2. Size: The Ge(Li) detectors presently are limited in size (maximum of 80 cm^3 of active volume). NaI scintillators, on the other hand, can be obtained in sizes 10 to 100 times larger. NaI spectrometers have high efficiency since the overall efficiency is roughly proportional to the active volume of the detector.
3. Operating Environment: The Ge(Li) detectors must operate in a vacuum at liquid nitrogen temperature, while NaI operates satisfactorily at room temperature.
4. Instrumentation: The accompanying electronics for the Ge(Li) detector are more sophisticated than that required for the NaI scintillation detectors.

There are three major difficulties associated with gamma ray spectroscopy: (1) gamma absorption, (2) background, and (3) geometrical effects.

1. Most of the detectable gamma rays emitted by a fuel material come from within two mean free paths (mfp) of the surface area, and the rest are absorbed inside the sample. This can seriously bias the assay results if the sample is heterogeneous. The severity of this problem is indicated by the mean free path of gamma rays in a mixture of PuO_2-UO_2 with a density of 10 gm/cm^2. The mean free path of 385 kev gamma rays of ^{239}Pu is 0.3 cm, and that of 185 kev of ^{235}U is 0.07 cm. This means that

*Full Width Half Maximum.

majority of ^{239}Pu gamma rays come from within 0.6 cm of the surface area of the sample, and that of ^{235}U come from within 0.14 cm of the surface. This restricts the size of the sample under analyses unless the sample is homogeneous. Clearly, this means that gamma ray spectroscopy is not suitable for assay of large, and high concentration samples. However, many present day reactor fuel assemblies are made up of fuel pins about 0.25 to 0.6 inches in diameter so with use of correction factors from standards, one is able to assay individual pins prior to assembly for either ^{235}U or ^{239}Pu contents.[3]

2. The second problem which effects the accuracy of the passive gamma ray method is the high gamma background in the vicinity of the desired gamma line. The background can be the result of Compton events of higher energy gamma rays or lines which cannot be resolved from the line of interest. Ge(Li) spectrometry is often considered advantageous over the NaI spectrometry because of its high resolving power. The high resolution gives a high peak-to-background ratio which reduces both types of background problems. There will, however, be cases, especially with weak sources, in which the considerably higher counting efficiency of large NaI crystals will give them a distinct advantage over the Ge(Li) detectors.

3. The third problem with gamma ray spectrometry is its high sensitivity to geometrical shape of the sample under analysis. A 20-30% discrepancy has been experienced in analyses of odd-shaped samples at Gulf Radiation Technology[2] and Los Alamos Scientific Laboratory.[4] This discrepancy has

been greatly reduced in non-uniform samples by rotating and translating the sample and optimizing the collimation of the detector.

Gamma ray spectroscopy has been used[5] in a slightly different way when a large (compared to gamma ray mfp) homogeneous sample of known composition, e.g., UO_2 or U metal, is under analysis. Consider the case of U metal; it is known that the number of 185 KeV ^{235}U gammas emitted per cm^2 of surface is proportional to the enrichment. Thus, the enrichment of uranium metal is established from the intensity of the 185 KeV gamma-rays emitted from the surface of the sample.

In principal, it is possible to use gamma spectroscopy for assay of all the fissile and fertile elements, since all fuel elements emit gamma rays of some particular energies. The limitation is defined by element concentration, source strength, mixture type, matrix elements, geometry, and the environmental condition of the sample. In the experiments conducted at LASL[1] and GRT[2], it has been shown that the passive gamma ray spectrometry is most useful in assay of unirradiated ^{239}Pu, ^{235}U and to a lesser extent ^{238}U in plates and pins. Errors of less than 1% have been achieved. The gamma spectrometry is also applicable to ^{239}Pu and ^{235}U low level waste. Accuracy will improve as sample attenuation is reduced. This method will work[2] with a 5-10% accuracy on most categories of low gamma level waste. Recently, high resolution gamma-ray spectrometry has been successfully used for almost complete isotopic analysis of plutonium solutions.[6]

Passive Neutron Methods

Fissile and fertile materials of interest in nuclear fuel cycles produce neutrons by (α,n) reaction and spontaneous fission.

The (α,n) neutrons are mainly the result of α reaction with ^{18}O in oxide fuels. However, certain other low Z elements (e.g., F,B) which might be present have reasonably high (α,n) yield.

The spontaneous fission process which gives rise to two or more fast neutrons simultaneously is energetically allowable in all fissile and fertile elements (see Table II); however, it is an infrequent process in fresh fuels except for the case of ^{240}Pu. So, the rate at which spontaneous fission neutrons are produced is an accurate measure of ^{240}Pu contents of the sample (in recycle fuels there are other materials with high spontaneous fission rates present).

Now the problem is to distinguish between (α,n) neutrons and the spontaneous fission neutrons. The most widely used method is a coincidence technique. A description to the applications of coincidence techniques is given by Marchetti et al. in Reference 7.

There are two major matrix types which can reduce the accuracy of the neutron coincidence method: matrices containing low Z materials (e.g., F,B) which have high (α,n) yields, and highly hydrogenous matrices.

The (α,n) background may vary tremendously due to matrix materials, especially when the matrix contains floride or boron compounds. The increase in the background will increase the total neutron count. This results in an increase of the chance rate in the coincidence counting which reduces the sensitivity and accuracy of the measurement.

In highly hydrogenous matrices, the neutron moderation and subsequent absorption in the matrix material effects the response of coincidence counting technique. An error as high as 30% has been experienced at LASL[8] due to matrix neutron absorption in the assay of a 55 gallon drum containing

TABLE II

SPONTANEOUS FISSION RATES

Isotope	# Fission/gm sec*
U^{233}	$\leq 1.9 \times 10^{-4}$
U^{234}	3.5×10^{-3}
U^{235}	3.1×10^{-4}
U^{238}	7.0×10^{-3}
Pu^{238}	$1.0 \times 10^{+3}$
Pu^{239}	1.0×10^{-2}
Pu^{240}	4.5×10^{2}
Pu^{242}	6.4×10^{2}

*Data from Nuclear Engineering Handbook, edited by H. Etherington, McGraw-Hill, 1958, p. 2-5.

plutonium isotopes in various hydrogenous matrix materials. Application of correction factors will improve the overall results of the coincidence measurement. These correction factors have their highest value when low Z matrix materials are present.

Since most of the coincidence counters have a 4π geometry, the geometric shape of the sample has a very small effect on the response of the coincidence technique.

The neutron coincidence technique is already a proven[2,7,9,10] technique for determining ^{240}Pu contents of fresh fuel. Errors of

the order <1% have been achieved. This method can also be used in total plutonium assay when $^{239}Pu/^{240}Pu$ ratio is known. The neutron coincidence technique is less sensitive to moderate gamma activity present in the sample. Thus, assay of contaminated samples has a better change of success using this method. The coincidence method has also been used in assay of slightly enriched ^{238}U,[10] but the response is much less per gram of material, since the spontaneous fission rate of ^{238}U is less than ^{240}Pu spontaneous fission.

III. ACTIVE METHODS

The active methods can be divided into two major categories, active gamma interrogation and active neutron interrogation.

Active Gamma Ray Interrogation

In active gamma-ray interrogation method, high energy gamma-ray (5-10 MeV) (bremsstrahlung burst) are used to produce photo fission in the sample. The fission event is then detected by measuring the prompt gamma rays or prompt neutrons emitted. It is also possible to determine fission events by detecting delayed neutron or delayed gamma rays emitted after a fission event. However, higher yield of prompt neutrons has made them the preferable radiation to measure. The following is a description of an active gamma ray detection system counting prompt fission neutrons which has been developed at GRT[11].

A linear electron accelerator provides high energy electrons. These electrons inpinge on a high Z target which in turn results in production of high energy gamma-rays. The resultant gamma rays induce photo fission in samples containing fuel materials (6 MeV energy threshold).

The neutron detectors used are a set of BF_3 detectors embedded in a hydrogenous matrix. The separation between prompt and delayed neutrons is achieved by electronic sorting of the counts in the time interval of 0 to 1 millisecond following the gamma burst and from 1 millisecond to 5 milliseconds following the gamma burst. The gamma (bremsstrahlung) burst occurs at 5.6 millisecond intervals. The counts occurring in the first millisecond after burst contain nearly all prompt neutrons, and the counts occurring in the second time region (1-5 ms after gamma burst) are due entirely to delayed neutrons which is used as a background measure. The time required to perform the assay is 3-to-5 minutes.

The isotope sensitivity of active gamma-ray interrogation using linear accelerators is best described by Figure 1 which is a plot of neutron yield (prompt and delayed) vs. the electron energy for nucleid of interest. Below electron energies of 7 MeV (near threshold energy of (γ, f) reaction) the yield varies rapidly with energy. This variation is roughly a factor of 10^3 for 20% change in energy. Above the electron energies of 7 MeV, the change in yield for various isotopes is roughly a factor of 2 for 20% change in electron energy. From the above observation, it is concluded that the observed neutron yield above 7 MeV electron energies is a measure of total fissile and fertile material.[12] Due to delayed neutron time emission characteristics of various fissile and fertile isotopes, isotope discrimination has been achieved[12] using delayed neutron counts in various time intervals.

The active gamma-ray interrogation techniques are quite sensitive to the presence of ^2H, ^9B, ^{13}C in the matrix of the sample under interrogation. The reason is the high (γ,n) cross section of the above three elements. The response due to presence of H, B, and C can be corrected

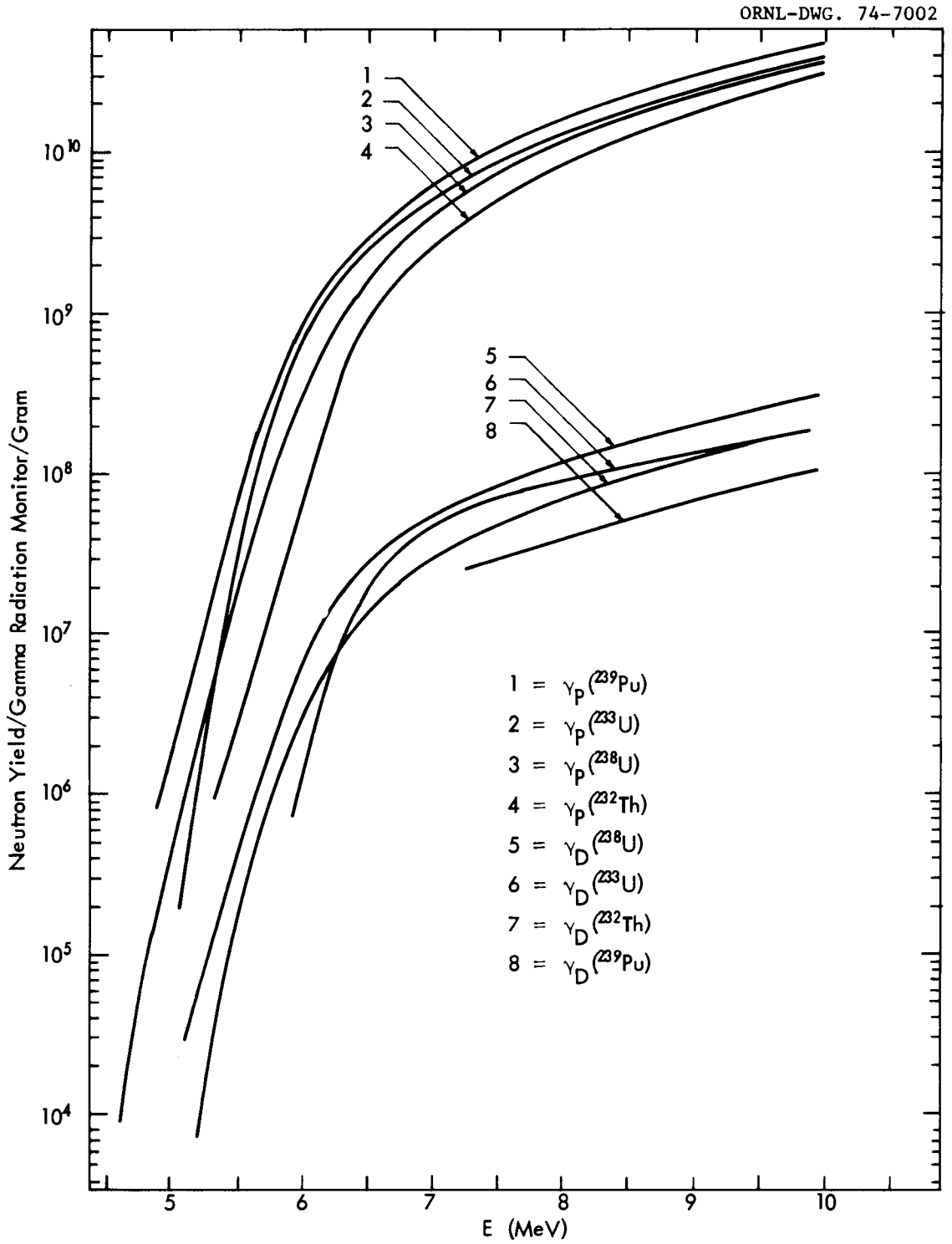

Figure 1. Prompt and Delayed Neutron Yields in Fissile and Fertile Materials Produced by Electrons of Energy E_e.

by making two measurements, one above the (γ,f) energy threshold and one below that energy. The difference is the response due to (γ,f) reaction only.

The geometrical shape of the sample under interrogation also introduces significant errors in this assay technique. So both translation and rotation of the sample during measurement is required to reduce the geometric effect. Based on the experiments done at CRT[11] rotation and translation of the sample reduces the error in heterogeneous and odd-shaped samples by a factor of 1.5 to 2.0. A 10% overall accuracy has been achieved in the assay of a large 55 gallon drum containing sand and cold uranium oxide fuel material.[13]

Active Neutron Interrogation

One of the more promising techniques in the nondestructive assay field is the active neutron interrogation techniques. There are several types of active neutron interrogation methods which have been fully developed. Most are the same in principal, using a neutron source, neutron beam attenuation equipment, and neutron detectors with accompanying counting electronics.

The principle of operation of all active neutron methods is as follows. The sample is irradiated with a beam of neutrons. These neutrons according to their mean energy induce fission in fissile and fertile materials present in the sample. A measure of desired emitted radiation from the fission event and a comparison to a standard is an indication of the amount of fuel materials in the sample.

The energy range of the interrogation neutrons are divided into the three ranges described as follows:

1. Neutrons with energies below 1 MeV are called subthreshold neutrons. These neutrons induce fission in fissile materials only.
2. Neutrons with energies between 1 to 5 MeV are called superthreshold neutrons. These neutrons can induce fission in both fissile and fertile materials.
3. Neutron with energies above 5 MeV. These neutrons can also induce fission in fissile and fertile materials, but the yield of delayed neutrons drops rapidly above 5 MeV for the nuclei of interest.[14]

The following is a discussion of three major active neutron interrogation systems which differ from one another in production of interrogating neutrons; also the last part of this section is dedicated to other potential active neutron techniques which are not well developed.

A. Active Neutron Assay Using (d,n) Reaction

In this case, the exoergic H^3 (d,n) He^4 reaction is utilized in a sealed gas discharge tube or a Cockroft Walton (CW) generator which produces 14 MeV neutrons. The output yield of the discharge tube is in the 10^{10} n/sec range as compared to 10^{11} n/sec yield of C-W generator. LASL[15] and the United Nuclear Corporation[16] have done considerably work using (d,n) reaction as a neutron source. Typically, the neutron generator is operated at 50% on-off cycle with pulse width of 50 to 100 msec. The counting is performed during the off time.

The detectors typically employed are a set of BF_3 or ^3He detectors embedded in polyethylene moderator and usually covered with Cd to reduce the thermal neutron efficiency. Such a detector system consequently has a high efficiency for neutrons with energies above Cd cut-off energy.

Considerable investigation has been carried out by LASL for a better understanding of the effect of matrix material variation and sample geometric effect. The results can be summarized as follows.

The neutron interrogation method (especially with subthreshold neutrons) is very sensitive to changes in hydrogen content of the matrix materials. The reason is the high moderating power of hydrogen. A method has been devised to partially correct for this moderating effect. It consists of putting a fission chamber, which contains the fissile species being assayed next to the sample. Any moderating effect which the sample produces on the interrogating spectra will also be seen as increased counting rate in the fission chamber. After normalizing the delayed neutron count to the fission chamber counting rate, the variations due to matrix content are reduced considerably. The moderating effect can be further reduced by using the ratio of the fission chamber count to the beam monitoring count combined with the information from calibration runs done on known standards.

The nonuniform distribution of matrix material can also be significant. This effect is large enough (20-30%) so that all but very homogeneous or very small samples (less than 1 gallon containers) will require rotation. In the case of very large samples (55 gallon drums) translation and rotation of the sample is essential.

The time required for a complete assay is about 2-5 minutes. More time is required for assay of large samples.

The best accuracy which has been achieved using this technique is 0.2%. The assay was done[15] on a homogeneous small sample of cold fuel containing no hydrogen. A 20-40% accuracy has also been achieved in assaying a 55 gallon drum containing low level waste materials with various amounts of hydrogenous materials present in the matrix. More sophistication in data analysis and data taking, and better standards could lead to the achievement of better accuracies.

The advantages of active neutron interrogation using (d,n) reaction as the neutron source can be summarized as follows.

1. High penetrating power of 14-MeV neutrons which makes the method useful for assay of large samples.
2. The technique works in presence of high gamma rays and moderate neutron levels from sources in fuel.

This makes the technique attractive for assay of recycled fuel.

The disadvantages of this technique can be summarized as follows.

1. Requires considerable shielding for the 14-MeV source.
2. Moderating matrices can cause considerable errors.
3. Accelerators are expensive and require maintenance and target replacement.

B. Active Neutron Interrogation Using (p,n) Source

The (p,n) reaction is similar to the (d,n) method described in part A except that the neutrons are produced by the endoergic (p,n) reaction. This allows some control on the maximum neutron energy. The immediate advantage is that subthreshold or superthreshold neutrons are readily available; hence no spectrum attenuation for the purpose of neutron energy control is required.

The most commonly used (p,n) reaction is

$$_{3}Li^{7} + _{1}H^{1} \rightarrow _{4}B^{7} + _{0}n^{1} - 1.63 \text{ MeV}.$$

This reaction, therefore, requires protons with energies greater than 1.63 MeV. The accelerator most commonly used for proton source is a Van de Graaff generator capable of several MeV. Since the energy of the source neutrons can be controlled, therefore, subthreshold assay for fissile materials and superthreshold assay for fissile and fertile materials are possible.

The active neutron interrogation method using (p,n) reaction as neutron source combined with absolute delayed-neutron yield measurement has been developed and used by Evans[17] at Los Alamos. Various types of reactor fuel elements and mock-ups have been assayed by Masters et al.[18] Errors of the order 1% or better have been achieved over wide range of unirradiated fuel loading.

The problem of distinguishing between two fissile materials (e.g., ^{239}Pu, ^{235}U) which are present simultaneously in the sample is best solved using (p,n) neutrons and kinetic (time-dependent) response of the delayed neutrons. By counting the delayed neutrons emitted in various time intervals following neutron irradiation of the sample. The decay shape differences result in measurable differences (isotope discrimination) between fissioning isotopes.[19] For some types of composite systems, the kinetic response method is capable of determining relative isotopic abundance within 2% accuracy.[19]

The geometric and matrix sensitivity of (p,n) method is comparable to the (d,n) method. The principal experience with this method has been on a mock-up of a BWR fuel assembly where quite uniform spatial sensitivity (better than 5%) has been achieved.

The advantages of active neutron interrogation using (p,n) reaction as the neutron source can be summarized as follows.

1. Good technique for experimental development because of the flexibility in neutron spectrum.
2. With this technique, one can achieve isotope discrimination.

The disadvantages of this technique are:

1. Accelerators are very expensive.
2. The accelerators are complicated to operate and require experienced operators.

C. Active Neutron Interrogation Using ^{252}Cf Source

Recently ^{252}Cf has become available in reasonable quantities and cost ($12/μgm). This isotope decays by spontaneous fission at a rate of 1.2×10^9 fission/curie and produces neutrons at a rate of 2.34×10^6 n/sec μgm. Although the 2.4 year half life of ^{252}Cf is relatively short, its being relatively cheap, reliable, and stable neutron source has definite advantage over the accelerator produced neutron source.

The application of ^{252}Cf is in principle the same as the active neutron interrogation discussed above. However, ^{252}Cf neutron energy spectrum peaks at about 1 MeV and drops off rapidly with increase in energy. So, its sensitivity is low for superthreshold interrogation. It works well, however,

for subthreshold interrogation, and has been applied extensively to the assay of fuel rods.[20] Errors in the range from 0.2% to 1.0% (1σ)[20] are typical.

A different approach has been used by GRT[21] where the sample is surrounded by four high efficiency detectors. The detectors are plastic scintillation counters sensitive to both fast neutrons and gamma rays produced in fission. Since there are, on the average, 2.5 neutrons and about 5 or 6 gamma rays per fission, the chance of coincidence in the detectors are quite good when a fission event occurs in the sample. By requiring three detectors out of four to record a simultaneous event, and by using short coincidence resolving time (60 nsec), the background and the chance rate can be kept low.

Neutron interrogation methods are quite sensitive to any moderator in the matrix, especially when samples are large. The GRT coincidence method has been successfully demonstrated for containers up to about 1 gallon in size containing unirradiated fuel in liquid or solid form. Typical assay accuracies are ~5%.

For reasons discussed earlier, the composition of matrix materials will have an important effect on the results of assay. GRT's work with plutonium[21] shows that sensitivity increases by a factor of more than two as the amount of moderator in the sample was increased. Thus, as with other neutron interrogation methods, some knowledge of the matrix composition will be required so that a proper calibration can be applied in order to obtain accurate results.

The advantages of neutron interrogation systems using ^{252}Cf as neutron source can be summarized as follows.

1. Relatively cheap neutron source.
2. Sensitive to fissile content.
3. Reasonable penetrating power.
4. Active technique of about same complication of passive method.
5. Good source stability from day to day.

The disadvantages are as follows:

1. Significant personnel shielding is required.
2. Short half life of 2.5 years, will require occasional source replacement.
3. Response is effected by moderating matrix.

D. Active Neutron Methods Using Other Sources

There are also other neutron sources besides those mentioned above which could be used in active neutron interrogation techniques. These other sources mainly utilize (α,n) or (γ,n) reactions. Although not as intense as ^{252}Cf, radioactive subthreshold neutron sources such as ^{239}Pu-Li, ^{124}Sb-Be, ^{88}Y-Be, ^{210}Po-Li, and ^{241}Am-Li are well suited for the assay of fissile materials in the presence of the fertile materials. The following is the description of two active neutron assay systems using ^{241}Am-Li and ^{124}Sb-Be as neutron sources respectively.

The ^{241}Am-Li neutron source (of strength ~5×10^5 n/sec) has been used by Foley[22] at LASL in the Random Source Interrogation system[23] or "Random Driver". The Random Driver system is a compact, nondestructive assay instrument used principally to determine the ^{235}U contents of containers up to 5 gallon capacity. The source neutrons induce fission in ^{235}U. The fission event is recorded using coincidence techniques

which detects fission neutrons but not the source neutrons. The Random Driver Interrogation system has been used at Oak Ridge Y-12 Plant for assay of several killogram quantities of 93% enrich uranium.[22]

The advantages of the Random Driver system are:

1. A fast assay system.
2. A relatively high neutron source density.
3. A proven and accurate assay system.

The disadvantages of the Random Driver system are:

1. The system is not designed for assay of fertile materials (subthreshold source neutrons).
2. The system is not designed for assay of large samples.

A photoneutron antimony-124-beryllium system has been developed by H. O. Menlove et al.[24] at LASL. This system utilizes the (γ,n) reaction where the source of gamma rays is ^{124}Sb. The average neutron energy from a ^{124}Sb-Be source is about 26 keV which can induce fission in fissile materials of the reactor fuel rods. The fission event is detected using ^{4}He fast neutron detectors which surround the fuel rod. Figure 2 is a schematic diagram of the detection system. The ^{4}He fast neutron detectors are well shielded from source gamma rays by a layer of Pb. This assay system has been used for interrogation of small UO_2 samples, pressurized water and boiling water reactor fuel rods, and high temperature gas cooled reactor fuels. A 1% assay accuracy has been achieved using 5-to-10 ci of Sb source.

The advantages of this system can be summarized as follows:

1. A proven technique for subthreshold assay of unirradiated reactor fuel elements of various kinds.

ORNL-DWG. 74-7003

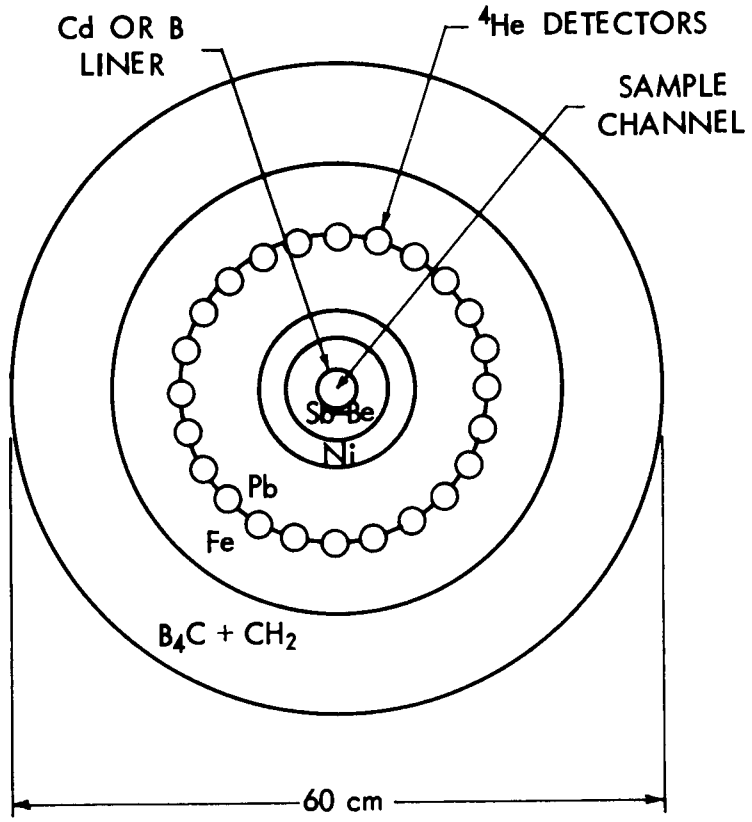

Figure 2. Schematic Diagram Showing a Cross Section of a Cylindrical Assembly of the Type for Use in the Assay of Reactor Fuel Rods and Small Samples.

2. Since this system has to cope with the intense gamma dose from ^{124}Sb and the detectors are well shielded from the sample, it it well suited for the assay of irradiated fuel components and solutions which have a high gamma-ray background.

The disadvantages of the above ^{124}Sb-Be system are:

1. The primary disadvangage of ^{124}Sb-Be system is the short half life of the antimony-124 (60.9 day). It is anticipated the longer lived ^{88}Y (107 days) will soon be used in place of ^{124}Sb. This will give neutrons with more penetrating power (200 KeV).

2. The fertile material assay is not possible with the system.

CHAPTER III

HANFORD FUEL REPROCESSING PLANT AND ITS NONDESTRUCTIVE ASSAY SYSTEMS FOR PROCESS MONITORING

I. INTRODUCTION

Processing of nuclear fuels irradiated in the Hanford reactors is conducted by the Atlantic Richfield Company for the Atomic Energy Commission at Richland, Washington. Chemical separation of plutonium, uranium, and neptunium from fission products is accomplished in the Hanford Purex Fuel Reprocessing Plant. Since the operation of this reprocessing plant is similar to the proposed LMFBR* fuel reprocessing plant discussed in Chapter IV, it will be advantageous to first review the operation and the assay systems of the Hanford Purex Plant which is in operation.

This chapter is divided into two parts: (1) the description of the Hanford Purex Plant flow diagram; (2) plant nondestructive assay systems such as gamma, alpha, neutron, photometers, conductivity, and floride monitors and their respective uses in the reprocessing plant.

II. PROCESS DESCRIPTION OF HANFORD PUREX PLANT[25]

In the Purex Plant, the irradiated fuel elements are first chopped and sheared, and the cladding materials are separated from the fuel materials with the appropriate chemical and nitric acid solutions. The cladding materials (which are not dissolved in the acid) are then discarded to the underground waste storage tanks. The resulting nitrate

---

*Liquid Metal Fast Breeder Reactors.

solution of uranium, plutonium, neptunium, and fission products is then processed through several pulse column cycles of solvent extraction for separation and purification of the desired products. The solvent used is 30 Vol % tributyl phosphate (TBP)--70% normal paraffin hydrocarbon (NPH).

The major fission product decontamination and partitioning of the plutonium from uranium and neptunium is accomplished in the first decontamination and partition cycle Figure 3. (Also see the table of nomenclatures, Table III. Additional fission product decontamination is achieved in the second and third plutonium cycle Figure 4, and the second uranium cycle Figure 5. Neptunium and residual plutonium are separated from uranium in the second uranium cycle, and routed via the aqueous 2 DW stream to the back cycle waste system (not shown in the figures). The back cycle waste system also receives aqueous wastes from the second plutonium cycle 2 AW stream, third plutonium cycle 3 AW stream, and second neptunium cycle (not shown in figures) for concentration and recycle. Part of the concentrated back cycle waste, stream 3 WB, is routed to the first decontamination and partition cycle, HA column, for product recovery; the remainder is recycled through the second neptunium cycle (not shown), in which neptunium is continuously accumulated and separated from plutonium. This accumulation phase is continued until a sufficient quantity of neptunium is contained in the system to warrant processing through a batch ion-exchange system (not shown) for final purification and concentration.

The aqueous waste stream (HAW) from the first decontamination and partition cycle, containing virtually all of the fission product activity entering the process, is concentrated for volume reduction and partial

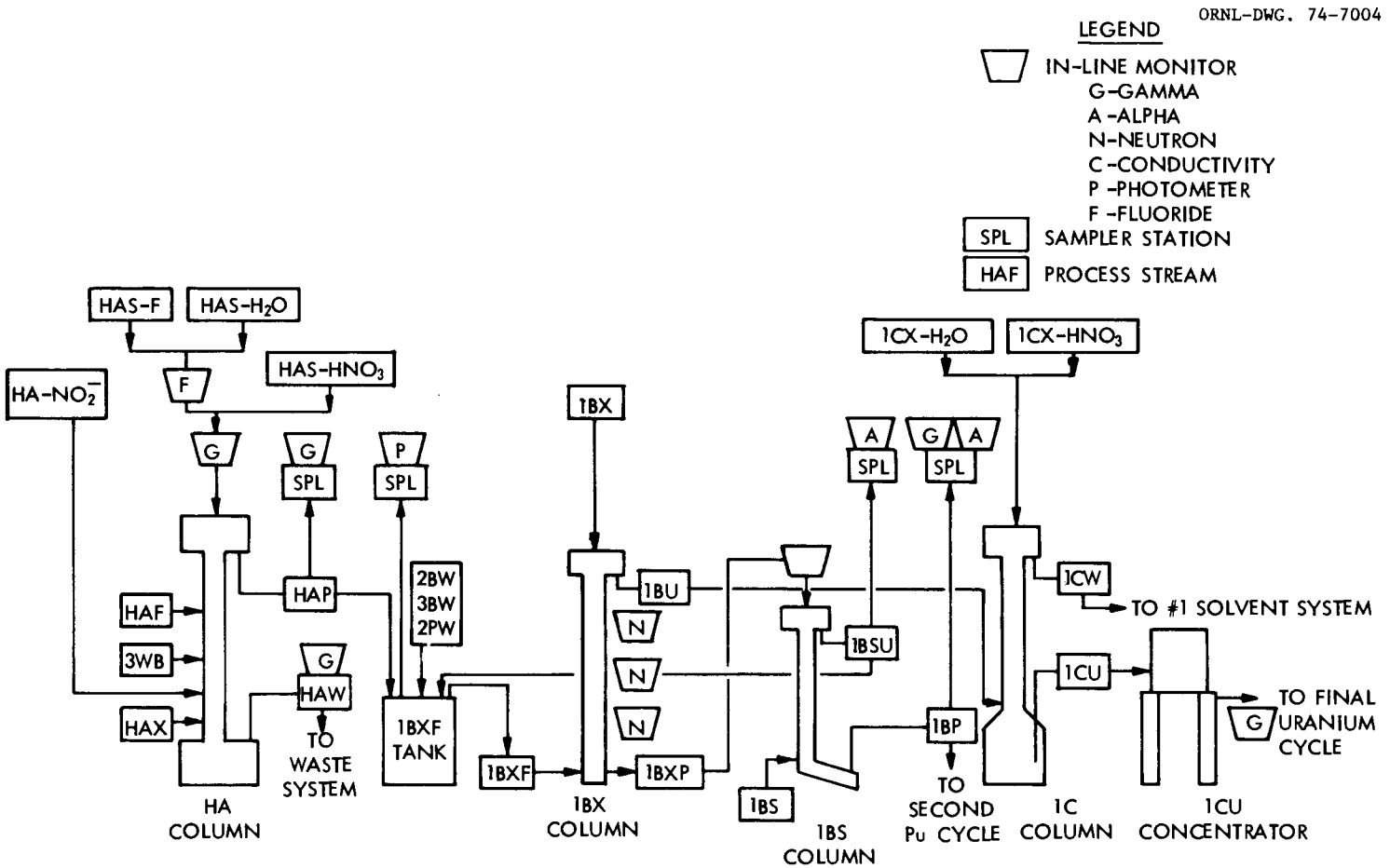

Figure 3. First Decontamination and Partition Cycle in Line Monitors.

TABLE III

TABLE OF ABBREVIATION

HA	Column HA
HAF	U, Pu, fission product aqueous feed to the HA column
HAX	Solvent extract and feed to the HA column
HAS	HA scrub
HAW	Aqueous waste from HA column
HAP	Scrubbed organic product from HA column
SPL	Sampling station
IBX	Column IBX, plutonium strip containing chemical reductant
IBXF	U, Pu, Fission product aqueous feed to IBX column
IBXP	Aqueous plutonium product stream
IBU	Organic uranium product stream from IBX column
IBS	Column IBS, plutonium uranium separation
IBSU	Separated uranium stream from IBS column
IBP	Plutonium organic product stream
IC	Column IC
ICX	Uranium strip
ICU	Aqueous uranium product stream from IC column
ICW	Aqueous waste from IC column
2AF	2A, feed tank, plutonium stream
2A	Column 2A
2AX	Solvent extractant feed to the 2A column
2AS	2A scrub
2AP	Plutonium organic product stream from 2A column
2AW	Aqueous waste from 2A column
2B	Column 2B
2BX	Solvent extractant feed to the 2B column
2BS	2B scrub
2BP	Plutonium organic product stream from 2B column
2BW	Aqueous waste from 2B column
3AF	3A feed tank, plutonium stream
3A	Column 3A
3AX	Solvent extractant feed to the 3A column
3AS	3A scrub
3AP	Plutonium organic product stream from 3A column
3AW	Aqueous waste from 3A column
3B	Column 3B
3BX	Solvent extractant feed to the 3B column

TABLE III (continued)

3BP	Plutonium organic product stream from 3B column
3BW	Aqueous waste from 3B column
2DF	2D feed tank, uranium stream
2D	Column 2D
2DX	Solvent extractant feed to the 3D column
2DS	2D scrub
2DU	Uranium organic product stream from 2D column
2DW	Aqueous waste from 2D column
2E	Column 2E
2EX	Solvent extractant feed to the 2E column
2EU	Uranium organic product stream from 2E column
2EW	Aqueous waste from 2E column
2PW	Aqueous waste from 2P column (not shown)
3WB	Third back cycle waste stream (not shown)

ORNL-DWG. 74-7005

LEGEND

Same as Fig. 3

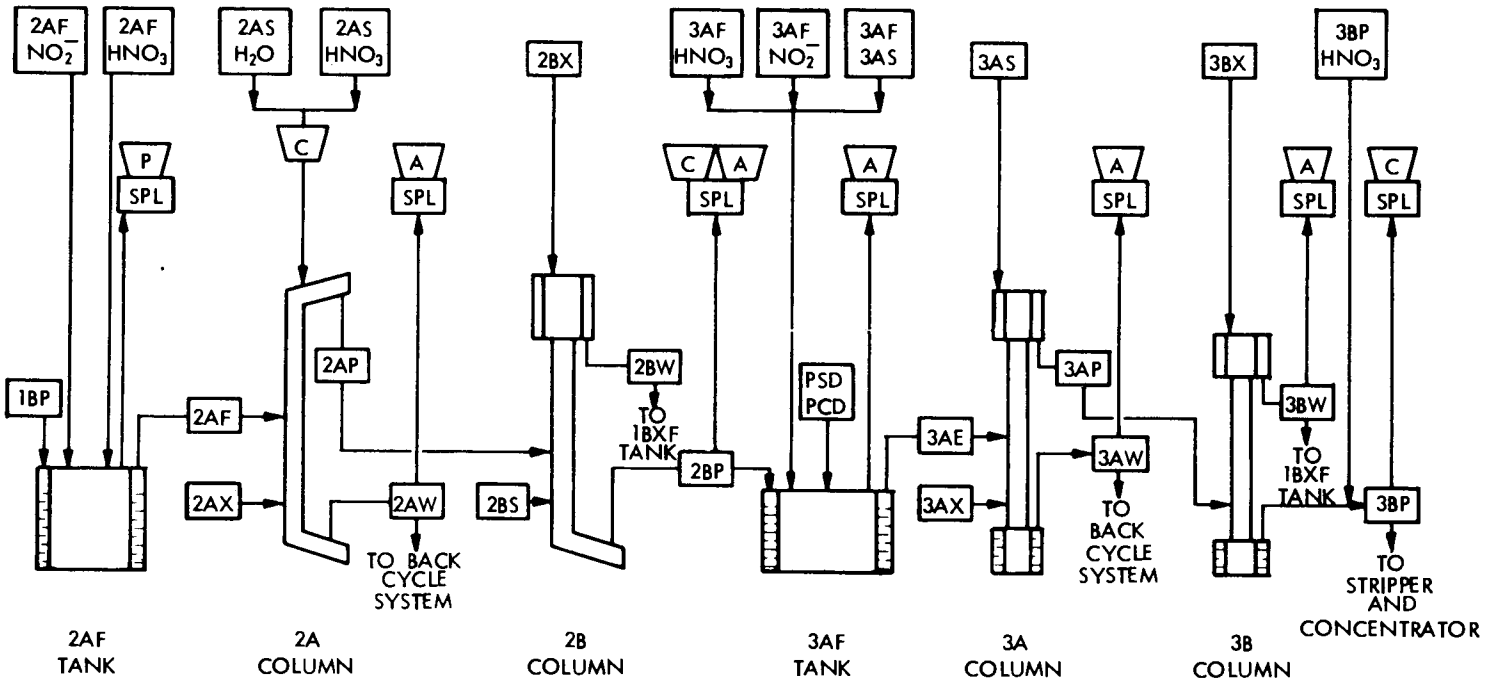

Figure 4. Second and Third Plutonium Cycles -- In-Line Monitors.

ORNL-DWG. 74-7006

LEGEND

Same as Fig. 3

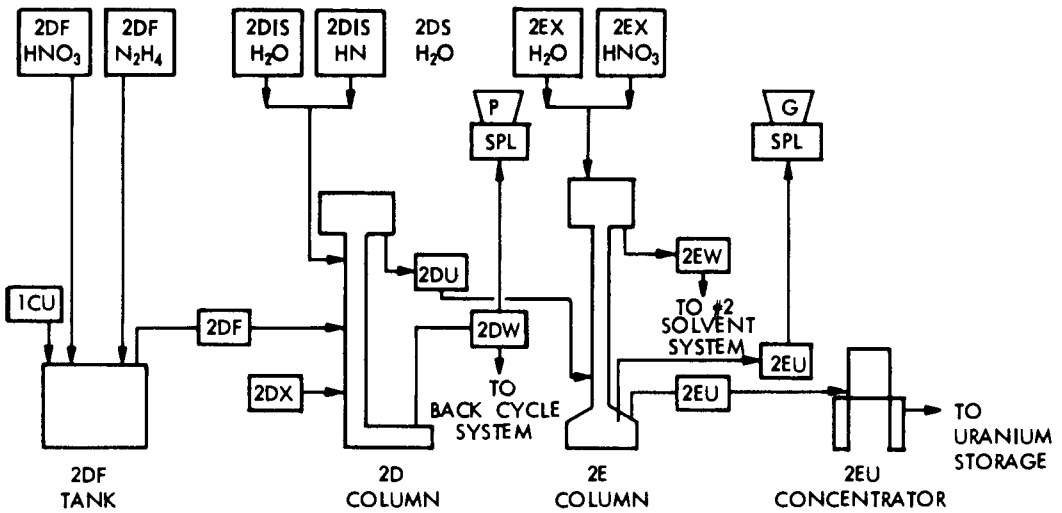

Figure 5. Final Uranium Cycle -- In-Line Monitors.

recovery of its nitric acid content. The concentrated waste is further denitrated prior to subsequent processing in separate facilities. The plutonium, neptunium, and uranium products are shipped from the Purex Plant as nitrates in nitric acid solution.

The Hanford Purex Plant operates as a batch reprocessing plant. After reprocessing a batch of fuel elements, the plant is shut down and cleaned with solutions of nitric acid.

III. NONDESTRUCTIVE ASSAY SYSTEMS FOR PROCESS MONITORING IN THE HANFORD PUREX PLANT

This section describes several Purex Plant in-line monitor systems which have facilitated the operation of the Hanford Plant. The monitoring systems are based on continuous sampling of different process streams in the Purex Plant. The sampling usually takes place in a heavily shielded sampling station where various counting equipment is located. Charts and calibration curves from standards are available for interpreting the output of the count rate meters (CRM). These charts and curves are periodically checked against laboratory analyses. The basic uses of monitoring are criticality prevention and flow adjustments in various vessels and streams in the plant. The most important difficulty with the monitors which was experienced at Hanford was the high gamma build-up in the sampling stations. It is reported that in some cases water flushing of the stations every hour and acetone flushing annually helps in reducing the gamma background, but sometimes the replacement of the stations was required.[26]

Various monitors such as gamma, alpha, neutron, photometer, conductivity, and fluoride monitors which are located throughout the plant and their uses will now be discussed. Their respective locations are indicated on Figure 3 through Figure 5.

Gamma Monitors

A. Sodium Iodide Monitors for ^{95}Zr-Nb and ^{106}Ru-Rh

The major fission products that must be removed from the product streams in the Purex Plant are ^{95}Zr-Nb and ^{106}Ru-Rh. Gross gamma monitoring systems, counting all gamma energies above 0.45 MeV, are used to determine gamma activity of the product streams. The 0.45 MeV cutoff point is used to discriminate against ^{131}I (0.364 MeV) and ^{239}Pu (0.38 and 0.41 MeV). These fission product concentrations are measured by sodium iodide gamma monitors located at manual sample stations. Each monitor has a sample cell that holds 32 ml of solution, and is fabricated of KEL-F (trademark of 3M Company) or highly polished stainless steel to reduce background build-ups. The sample cell is mounted on a lead "Pig" for background shielding along with a NaI crystal and phototube assembly. The assembly is an "Integral-Line" fabricated by the Harshaw Chemical Company and consists of a Thallium-activated Sodium Iodide NaI (TI) crystal, 2 in. thick x 1.75 in. in diameter, attached to a 2 in. RCA 6342A photomultiplier tube. The phototube is connected to a close coupled pulse transformer. The resulting signal is transmitted to the electronic components in the In-Line monitor room. Lead collimators are placed in front of the crystal in the "Pig" on high level streams to reduce count rates and exposure to the phototube.

During operation, the sampler jet is turned off for 5 minutes every hour to measure the cell background, which usually varies $<\pm 2\%$ during a 20-to-30-day run period. Extremely high level gamma exposure for a long period can cause the background to rise and necessitate decontamination or replacement of the cell.

Depending on the amount of lead collimation used, fission product concentrations from 1×10^{-1} to 1×10^{6} μCi of ^{95}Zr-Nb plus ^{106}Ru-Rh per liter have been measured.

These gamma monitors are located on the product stream of each cycle: HAP (organic); IBP (aqueous); and 2EU (aqueous) (Figures 3, 4, and 5). These monitors have been very helpful in controlling the operation of each cycle, particularly the HA column. Since the feed solution to HA column is derived from three dissolvers, the uranium concentration varies slightly from batch to batch, thus changing the organic saturation to HA column. This, in turn, causes the fission product level in an HAP stream to vary. The HAP monitor is used as a guide for manual adjustment of feed rate to maintain the fission product level in the HAP stream at a minimum level consistent with low product losses via HAW stream.

B. Iodine Monitors

The ^{131}I content of the off gases from the dissolvers and from the dissolver off-gas acid recovery system is measured by gamma monitor systems similar to those described in part A, except that a single channel analyzer is used instead of a discriminator. The analyzer window is set to measure 0.344 to 0.384 MeV which centers the ^{131}I peak at 0.364 MeV. The sample cell used is a modified one-liter stainless

steel beaker coated with KEL-F. A water flush of the sample cell, programmed once per hour, normally keeps the cell background low, although an acetone flush is occasionally required. The monitors are used to determine the effectiveness of the iodine absorbers that are associated with the dissolver. The monitor on the acid recovery system provides an indication of the ^{131}I discharged to the atmosphere via a filter and main building ventilation exhaust stack.

C. Neptunium Monitor

A gamma monitor similar to the iodine monitor is used to measure the effluent stream from the Neptunium anion exchange column. The total product stream flows through the monitor sample cell. It has, in addition to a single-channel analyzer,a base line sweep generator that continuously varies the threshold setting of the pulse height analyzer from 0 to 10 volts, with a 1% window. Normal sweep time is 5 minutes. The analyzer is calibrated from 0 to .5 Mev over the 0 to 10-V range using a ^{133}Ba source. The output of the count rate meter (CRM) goes to a variable speed strip chart recorder operating at 12.5 mm/min chart speed. The chart figures help to differentiate between ^{228}Th and ^{237}Np which have about the same energy level, but the ^{228}Th peak is much broader than ^{237}Np peak.

D. Ion Chamber Gamma Monitors

Ion chamber gross gamma monitors are mounted in sleeves in the concrete shielding wall opposite about 20 canyon vessels. The sleeves terminate in the sample gallory, which allows contact maintenance of the ion chamber and cables. Each ion chamber is connected to a picoammeter, in either the In-Line monitor room or control room, and then to the

recorder in either of two control rooms. The monitor on the first-cycle uranium product concentrator (ICU) has been quite effective in measuring the fission product contents of the uranium stream from the partitioning cycle. The monitors on dissolver product centrifuges are used to measure solids build-up, and they are also helpful in the clean outs.

Alpha Monitors

The plutonium concentrations of several process streams are measured by alpha monitors located at manual sample stations. Each monitor has a stainless-steel flow cell which encloses a scintillator, consisting of a .001 in. Cerium activated surface on a 1/4 in. thich x 3 in. diameter Vycor (Trademark of Corning Glass Works) glass type 7913 disk. The process stream is in direct contact with the activated surface. The scintillator is attached with epoxy cement to an EMI 9656KB photomultiplier tube. The phototube is connected to a preamplifier located within 10 feet of the detector.

Early development work on glass scintillators was done by Upson and Huck and Lodge,[27] with the most recent work done by Koski.[26] The first glass scintillators used had a .010 inch Cerium-activated surface and were used on waste stream from a plutonium anion exchange column. This contained ^{106}Ru-Rh at levels of about 1 to 25 μCi/liter which gave no interference to plutonium measurements. When a similar monitor was installed on a different stream, beta interference occurred at a level of about 500 μCi/liter of ^{106}Ru-Rh. The work of Koski showed that changing the thickness of alpha monitor Cerium-activated layer to about .001 inch, and with proper setting of the discriminator unit, ^{239}Pu concentrations as low as 1×10^{-4} g/liter could be measured in the presence of 0.3 Ci ^{106}Ru-Rh/liter and 0.3 Ci ^{95}Zr Nb/liter.

The range of measurement with the current sample cell has been 1×10^{-4} to 30 gr ^{239}Pu/liter. The higher ranges require the use of a single channel analyzer instead of a discriminator unit to allow only a portion of the energy spectrum to be measured, thus reducing the total counts. This will raise the lower measurable concentration level to about 0.1 g ^{239}Pu/liter.

Alpha scintillation monitors are used in the Purex Plant since the ratio of the plutonium isotopes for a given run period is known. Changes in the ^{239}Pu-to-^{240}Pu ratio can change the total counts read by the glass scintillator since it measures any alpha present. Appropriate adjustments in interpretation of data are therefore necessary.

The alpha monitors are located on IBP, IBSU, 2AW, 3AF, 3AW, and 3BW process streams (Figures 3 and 4). They are used for criticality prevention to ensure that the ^{239}Pu entering nongeometrically favorable vessels remains at safe levels. They are also used to keep ^{239}Pu losses from certain columns, such as in the 2AW and 3AW streams, at some fixed value to improve the fission product decontamination for that column. Since the streams are recycled, the plutonium is not truly lost. The monitors have been helpful in maintaining tight control of the plutonium-bearing streams by allowing manual adjustments to be made quickly before analyses from manual samples can be obtained.

Neutron Monitors

A. Plutonium Measurement

The plutonium concentrations of certain process streams are measured directly by neutron monitors located remotely on a vessel or pipeline. One or two tubes mounted in a paraffin moderator measure neutrons resulting primarily from (α,n) reactions in the process solution.

The neutron monitors are used to measure ^{239}Pu concentrations of 1×10^{-2} g/liter to 10 g/liter. Even though the actual count rates obtained are relatively low (2 to 1000 counts/min) for the ^{239}Pu values above, the monitors have proven quite reliable and helpful in determining ^{239}Pu concentrations in the various streams. It is also necessary to point out that the neutron monitors are used successfully in the Purex Plant since the ratio of plutonium isotopes for a given batch run period is known, and only the nitrate form is present downstream of the dissolvers. Changes in ^{239}Pu-to^{240}Pu ratio make a considerably difference in the number of neutrons emitted and must be taken into account when interpreting the calibration curves.

Neutron monitors are located on HAF feed tank, the IBX column, the IBXP stream, and the 3WB recycle vessel (Figure 3). Only one probe was originally mounted on the IBX column, and it could be raised or lowered by the remote crane to give a ^{239}Pu profile in that column. Three probes are now located five feet apart vertically on the lower section of the column which provides instantaneous indication of changes in the ^{239}Pu profile. The monitors have been useful in detecting loss of plutonium-uranium partitioning during routine operation, thus allowing corrective action to be taken before the product streams were out of specification.

B. Cadmium Nitrate Monitors

A solution of cadmium nitrate, a neutron poison, is used as the motive fluid for a jet transferring high concentration ^{239}Pu solutions to a nongeometrically favorable vessel for rework of out-of-specification Plutonium solutions through solvent extraction. The cadmium nitrate make-up tank is equipped with a neutron source, mounted with a BF_3 tube

at the bottom of the tank. As the cadmium nitrate concentration increases, it absorbs more neutrons, so fewer are counted. A converter between the CRM and recorder reverses the signal so that an increase in cadmium nitrate concentration causes a corresponding increase in the recorder reading (actual counts will decrease). The pump that supplies cadmium nitrate solution to the transfer jet is interlocked with the monitor so the pump will not operate unless the cadmium nitrate concentration is above a minimum value. The range of measurement is 0 to 100 g of cadmium nitrate per liter.

Monitors Using Photometers

A. Nitrite Monitors

It is rather difficult to measure the sodium nitrite concentration in some streams, particularly by an instrument that must handle radioactive solutions. A. L. Boldt[26] (ARHCO)* suggests the indirect determination of nitrite concentration by measuring the NO_2 in air that is purged through a mixture of nitric acid and sodium nitrite. Dierks and Russell[28] have used a duPont 400 photometric analyzer for measurement of the gas-phase NO_2 concentration. The normal range of the measurement is 5×10^{-5}-to-5×10^{-3} M of nitrite.

Sodium nitrite is added to the second Pu cycle feed (2AF) tank to adjust the plutonium to Pu IV. A slight excess is usually added to assure complete oxidation of plutonium, but a large excess is undesirable. The monitor is used as a guide for manual adjustment of the sodium nitrite addition to the 2AF tank and has proven very reliable.

---

*Atlantic Richfield Hanford Company.

B. Uranium Monitor

A Hanford-designed single-beam filter photometer developed by Dierks and Scott[29] has been in use at the Hanford Plant several years. The normal range of measurement with this photometer is ~5 to 70 gU/liter. However, the uranium monitor is much smaller, because the uranium concentration in the solution is measured directly and the extra equipment for air separation of the nitrite monitor is not required.

This monitor is used as a guide for manual adjustments of the 2DX rate to maintain a uranium loss of about 5% from the 2D column via the 2DW stream to improve fission product decontamination and neptunium separation in the 2D column. The uranium in the 2DW stream is recycled through the back cycle waste stream 3WB.

Other Monitors

Conductivity and fluoride monitors are used on several streamline and vessels in the Purex Plant to determine various acid concentrations.

Combustible gas analyzers are located on sample streams from each of the three dissolvers off-gas systems and on the vent from the dissolver decladding storage vessel to assist in maintaining the concentration of ammonia and hydrogen below explosive limits.

Most of the liquid and gas streams leaving the Purex Plant have either a gamma, beta, or alpha monitor depending on stream composition.

IV. CONCLUDING REMARKS

The use of nondestructive assay systems have proven to be useful and advantageous at Hanford Purex Plant. The application of these monitors have been limited to criticality control and manual feed adjustments in various streams. While these functions are fine for batch operated fuel reprocessing plants, the continuous operated plants (such as that being proposed) require more sophisticated criticality control and automatic feed adjustment, overall quantitative assay of fissile and fertile materials entering and leaving the reprocessing plant and also during their stay in the plant. This would insure the safety, safeguard and economical operation of the future LMFBR continuous mode fuel reprocessing plant which is the main discussion of the next chapter.

CHAPTER IV

RECOMMENDATIONS FOR NON-DESTRUCTIVE INSTRUMENTATION FOR A REFERENCE LMFBR FUEL REPROCESSING PLANT

I. INTRODUCTION

One of the major goals in the nuclear energy field is the development of a Liquid Metal Fast Breeder Reactor (LMFBR) industry capable of fulfilling the country's energy requirement in an economic manner. Among the major tasks in the LMFBR fuel cycle program is the development of economic fuel reprocessing technology.

There are several conceptual designs of LMFBR fuel reprocessing plants proposed by national laboratories and nuclear industries.[30,31] Here, I choose the aqueous fuel reprocessing plant proposed by the Chemical Technology Division of the Oak Ridge National Laboratory[32] for the reference plant in the upcoming discussion. Other designs in general are similar to this plant. Nondestructive techniques and instruments proposed for the ORNL aqueous reprocessing plant, therefore, can be adopted for other similar LMFBR fuel reprocessing plants.

This chapter consists of an overall description of the aqueous fuel reprocessing plant, identification of desired assay points, and finally the proposed nondestructive techniques and instrumentation for the following purposes:

1. Safety. Since the fuel reprocessing plant contains a large amount of nuclear fuels and accompanied fission products, safety of the public and personnel has to be insured against the radioactive materials in the plant. Major radioactive

hazards are criticality and characterization of radioactive materials in case of leaks.

2. Safeguards. The fuel reprocessing plant contains large amounts of nuclear fuels such as plutonium and uranium. These materials have to be safeguarded against misplacement and theft. A 0.5% error or 0.5 grams of ^{240}Pu[33] is the accuracy goal for most of the quantitative nondestructive assay instruments.

3. Accountability. Since a large LMFBR fuel reprocessing plant such as the reference plant serves 50 to 60 reactors, the accountability of the nuclear fuels are of major concern.

4. Process Control. Automatic process control using nondestructive techniques is desired first to maintain normal plant operation second to prevent and eliminate human error which might occur in manual process control.

II. GENERAL DESCRIPTION OF ORNL AQUEOUS FUEL REPROCESSING PLANT

In this section, an overall description of the ORNL Aqueous Fuel Reprocessing Plant (AFRP) is presented. The purpose is to familiarize the reader with the reference AFRP without going into excessive technical, chemical, and structural details. The reader is referred to references 30, 31, and 32 for more detailed aspects of the plant.

The reference AFRP has a capacity of reprocessing five metric ton (MT) of LMFBR fuel per day. Figure 6 is a general flow diagram of the reference AFRP (greater detail of each section is presented later in this chapter). The spent LMFBR fuel is expected to have a high burn-up (up to 100,000 MWD/MT) which will be common in the LMFBR fuels. The fuel is shipped to the reprocessing plant from several (50-60) reactors. This

ORNL-DWG. 74-7007

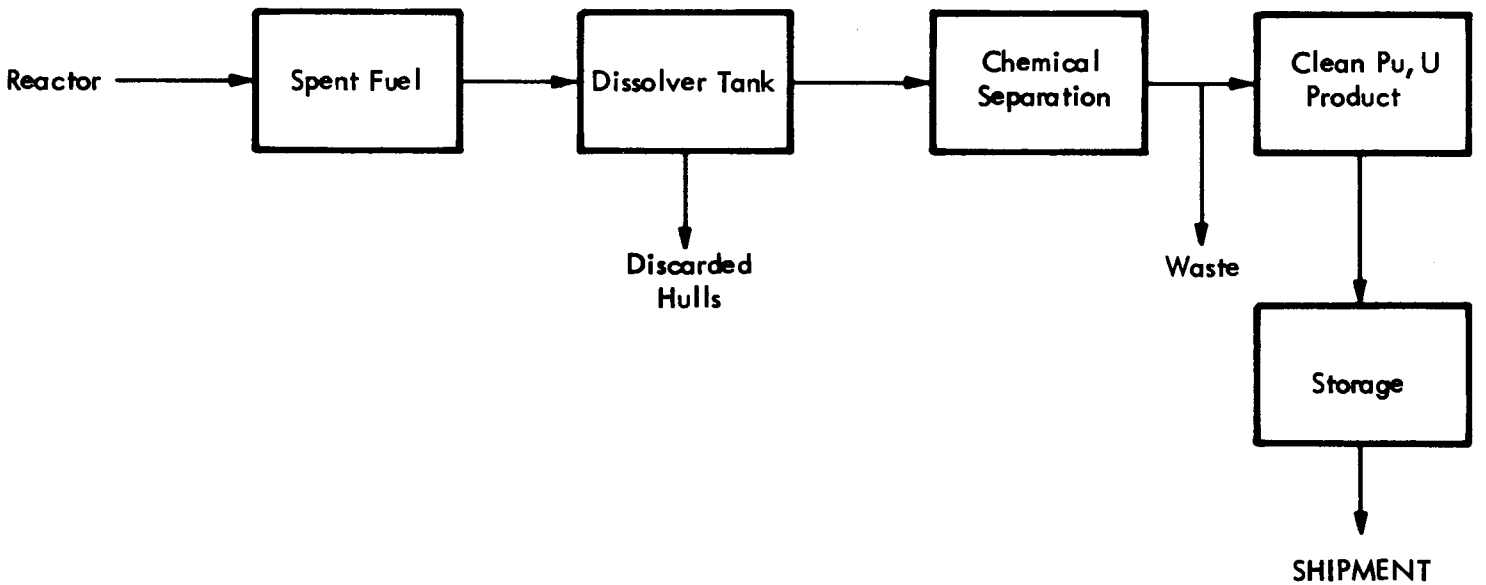

Figure 6. A Block Diagram of the Reference Fuel Reprocessing Plant.

is known as continuous mode operation. Present day fuel reprocessing plants are operating on what is known as batch mode operation. In batch operation, the fuel reprocessing plant serves the reprocessing needs of one reactor at any given time.

The idea of continuous mode operation for a LMFBR fuel reprocessing plant is economically advantageous with respect to batch mode operation of fuel reprocessing plants. As the number of LMFBR reactors on line increases, the load of the fuel reprocessing plants will also increase. This would result in long waiting time in the batch mode operation. Furthermore, to take full advantage of the breeding properties of the LMFBRs, one has to reprocess the spent fuel as soon as possible. A 30-to-60 days cooling time is recommended[32] for the optimum cooling time after the fuel is discharged from the reactor. The above clearly justifies the economic advantage of a large capacity continuous mode LMFBR fuel reprocessing plant.

The major processes which are involved in reprocessing the LMFBR fuel from the time it is discharged from the reactor to the time it is shipped to the fabrication plant can be divided into nine parts. Each of these nine are discussed separately below. The reader is referred to Figures 7, 8, and 9[32] in reading the following section. These figures show a complete flow diagram of the reference AFRP.

1. Shipping. As fuel is discharged from the reactor, it is desirable to ship the spent fuel to the reprocessing plant as soon as possible. But shipment of irradiated LMFBR fuel which has approximately 100,000 MWD/MT burn-up, and contains sodium deposits is not an easy task. Three major problems can be encountered in the shipment of the spent LMFBR fuel: (A) shielding of irradiated fuel, (B) heat dissipation, and (C) fission

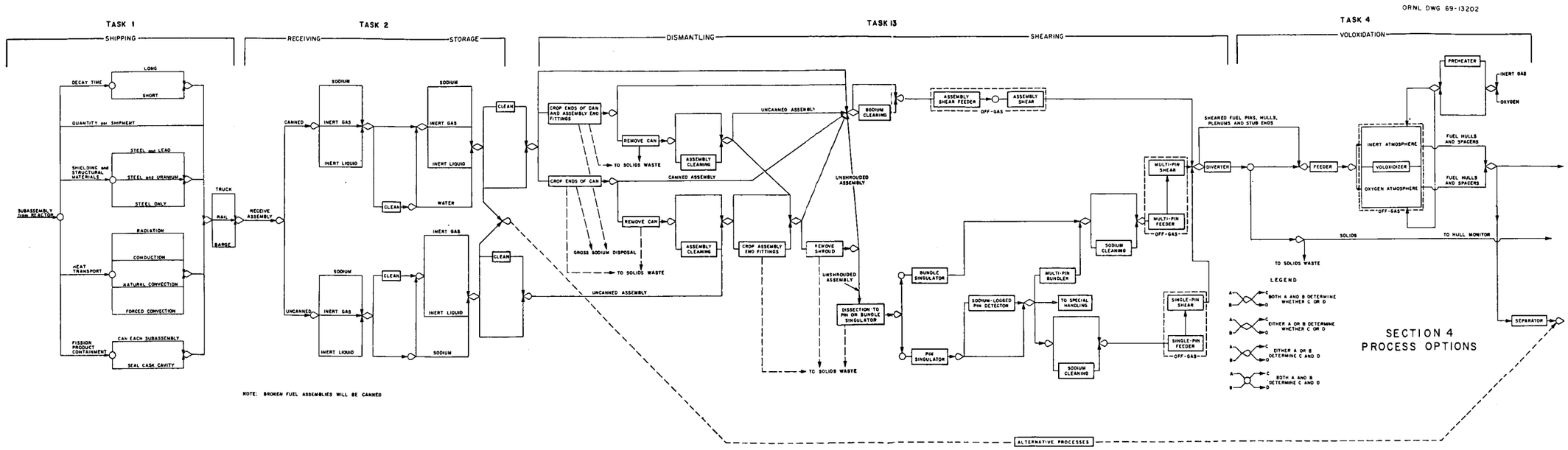

Figure 7. Flow Diagram of the Conceptual LMFBR Aqueous Fuel Reprocessing Plant. Process Options of Task 1-to-Task 4.

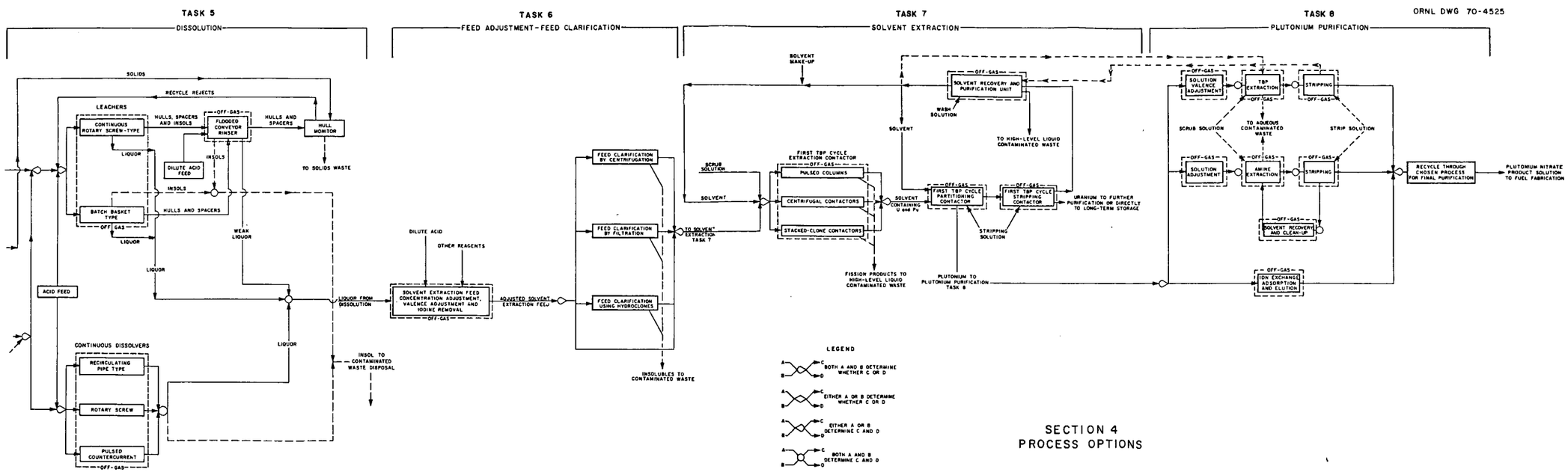

Figure 8. Flow Diagram of the Conceptual LMFBR Fuel Reprocessing Plant. Process Options of Task 5-to-Task 8.

ORNL DWG 69-14172

WASTE TREATMENT PROCESS OPTIONS DIAGRAM
TASK 9

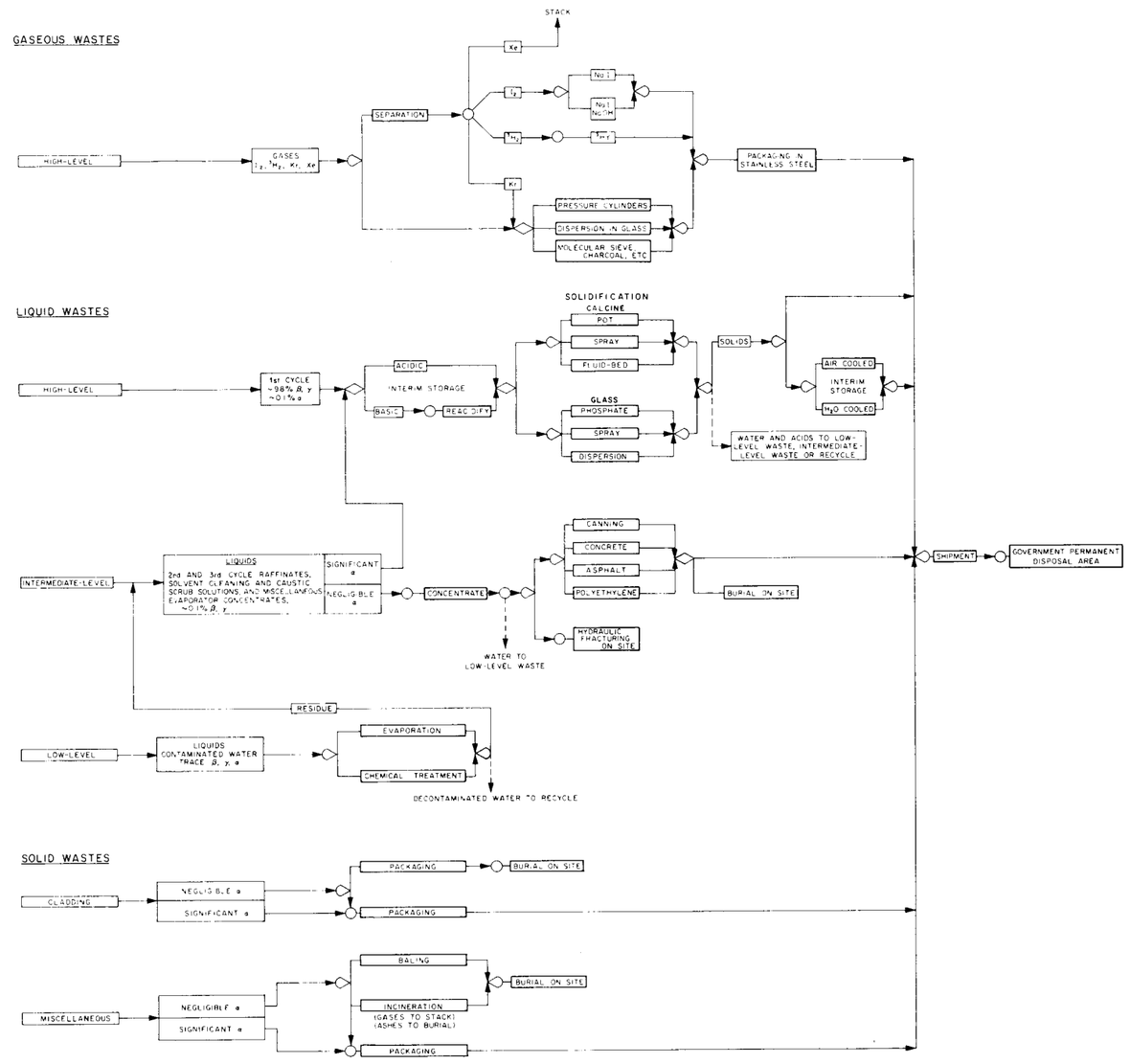

Figure 9. Flow Diagram of the Conceptual LMFBR Fuel Reprocessing Plant. Process Options of Task 9.

product containment. Many different shipping cask designs have been proposed by ORNL, and other laboratories[34] which have gone through many rigorous tests and hypothetical accident analysis, and proved to be adequate for the LMFBR subassembly shipment.

2. Receiving and Storage. The fuel subassemblies are dismantled from the shipping cask at this stage. The cask is sent back to the reactor for reuse. Receiving and storage facilities of all present-day Light Water Reactor (LWR) fuels are under water. This is not acceptable in the case of LMFBR spent fuel reprocessing. The receiving facilities of the LMFBR spent fuels must be in an inert gas or inert liquid because the sodium deposits of the spent fuel would act violently if it is contacted by water. A sodium clean-up facility is present at this stage which cleans most of the bulk sodium deposits that is on the fuel assemblies.

3. Dismantling and Shearing. In this stage, the spent fuel is in either of the following two conditions: (a) fuel assemblies which are not broken or damaged (uncanned), and (b) broken and damaged fuel subassemblies and rods. These fuel rods are gathered and contained in special transfer cans.

The uncanned fuel assemblies are passed through a remotely controlled mechanical saw where the heads and ends of the assemblies are sawed off. The fuel rods are then separated from the bundle fixture and fed into the shearing machine. The shearing machine chops the fuel rods into 0.5 to 2.0 inches in length.

The cans are removed from the canned fuel rods, before the rods are fed into a separate shearing machine. These rods are also chopped into 0.5 - 2.0 inches in length.

The sheared fuel rods are processed through a second sodium clean-up stage. This would remove trapped sodium from the sheared fuel rods.

4. Volaxidation. In this stage, the sheared fuel pins, hulls, plenums, and stub ends are heated to approximately 750°C in an oxygen or inert gas stream to remove fission product gases such as iodine, xenon, tritium, and krypton.

5. Dissolution. In this stage, the fuel, hulls, and spacers are treated with nitric acid in the dissolvers. Generally, dissolution equipment under consideration for LMFBR fuel falls into two categories: batch and continuous.

Batch leaching is the only method used at present time on a commercial basis. In batch leaching, sheared fuel (contained in a basket) and dissolvent are contacted batchwise in a leacher. After the fuel is dissolved, the product solution is withdrawn for further processing. The leached hulls, after washing and inspection are sent to the waste disposal system.

Continuous leaching has been partially developed at ORNL, using an enclosed rotary spiral leacher for unirradiated UO_2.[35,36] Concepts for the continuous dissolution of LMFBR fuels are many and varied. Several concepts of continuous leaching are shown on Figure 8. Uncertainties are common to all and require additional development efforts.

6. Feed adjustment and clarification. The dissolved fuel materials and fission product from the dissolution stage are treated with diluted nitric and other reagents for the purposes of valence adjustment, concentration adjustment, and iodine removal. Small size insolubles in the dissolved liquid are removed by one of the following techniques: (A) centrifugation, (B) filteration, and (C) using hydrocyclones.

7. Solvent extraction. In this stage, the solvent containing plutonium, uranium, and fission products is treated with 30 Vol % tributyle phosphate (TBP) and 70 Vol % normal paraphin hydrocarbon (NPH). The aqueous solution is sent to the first cycle solvent extraction. The fission product solution is separated from the plutonium and uranium solution and routed to the waste treatment stage which will be discussed later. The aqueous solution of plutonium and uranium is further treated with stripping solutions to partition uranium and plutonium solutions. The uranium solution may further be purified or sent directly to long-term storage facilities.

8. Plutonium purification. The plutonium aqueous solution from the first solvent extraction cycle goes through two similar solvent extraction cycles for further purification. The resultant purified plutonium is sent to fabrication plant or plutonium storage facility.

9. Waste treatment system. The waste treatment system is a vital part of the AFRP. The waste from various parts of the plant is brought in to this stage via pipes and baskets for treatment and disposal. As it is shown on Figure 9, the input to this stage can be divided into three major forms:

A. Gaseous waste. This type of water consists of iodine, helium, krypton, and xenon. These gases are either separated and packed or only packed in stainless steel containers. These packages are then shipped for permanent storage.

B. Liquid waste. The liquid waste can further be divided into high, intermediate, and low β, γ, and α level. The high level liquid waste mainly comes from the first solvent extraction cycle. It contains approximately 98% β and γ emitters and 0.1% α emitters. This liquid waste will be solidified and shipped for permanent storage. The intermediate level liquid waste mainly comes from

second and third solvent extraction cycle. The liquid contains approximately 0.1% β, γ, and α emitters. This type of liquid waste will also be solidified and shipped for burial or permanent storage. The low-level liquid waste contains trace amounts of β, γ, and α emitters. This type of waste is all contaminated water which will be evaporated or chemically treated for decontamination. The resultant decontaminated water will be recycled back through the plant.

C. Solid wastes. The solid waste mainly consists of cladding material and miscellaneous solid such as spacers, hulls, etc. found in the head end of the plant. All solid wastes will be packaged in stainless steel containers and shipped for burial or permanent storage.

III. IDENTIFICATION AND SELECTION OF ASSAY POINTS

A typical 5 MT/day fuel reprocessing plant such as the AFRP described in the previous section will receive spent LMFBR fuel for reprocessing from 50 to 60 reactors. Clearly, there are vast amounts of radioactive fuel materials and fission products present in the plant.

As will be seen later in this chapter, the nondestructive assay systems of the reference fuel reprocessing plant will provide vast amounts of information which must be processed and appropriate action taken. Use of a computer in data reduction and as a decision making tool is, therefore, essential.

In order to be able to identify major nondestructive assay areas, the overall plant nondestructive assay philosophy must be established.

Nondestructive Assay Philosophy

The nondestructive assay instrumentation of the fuel reprocessing plant will generate a large quantity of data which must be collected, processed, and interpreted. The resulting information must be displayed for the operator in the case of manual control or must initiate appropriate action in the case of automatic control. In either of these cases, a central process computer will be required. In addition to assisting in the control functions, the plant computer will be used for bookkeeping of the nuclear fuel materials received and the reprocessed fuel shipped. The size of the plant computer will be dependent upon its degree of use and utilization.

The overall plant nondestructive assay philosophy is discussed next with respect to each of the following four major points: 1. safety, 2. safeguards, 3. accountability, and 4. process control.

1. Safety. The fuel reprocessing plant is full of pipes and tanks which contain fuel and radioactive fission products in the form of gas, liquid, and solid. Nondestructive instruments must be provided for detection and characterization of leaks and criticality prevention. Leakage detection instruments must provide plant evacuation warning or plant shutdown. The criticality prevention instruments also must provide warning, also accompanied with automatic or manual poison addition or flow adjustment.

2. Safeguards. Safeguards are also of major concern since large amounts of purified plutonium and uranium exists in the reprocessing plant. Every exit from the plant such as: personnel exit, water outlet, sewage outlet, etc. must be instrumented to prevent unauthorized exit of nuclear fuels.

3. Accountability. Large amounts of nuclear fuel materials enter and exit the fuel reprocessing plant every day. These fuels are shipped to

the fuel reprocessing plant from various reactor operators. A nondestructive accountability system is required to determine the amount of fuel material received from and shipped to each reactor operator. This will be the basis for the reimbursement of purified plutonium and uranium to the reactor operator. Also, the amount of economically unrecoverable fuel materials which is lost through the waste treatment system must be determined to account for the overall plant material balance.

The overall plant accountability system must consist of several internal material balance monitors which measure the amount of fuel material going into and coming out of any section of the plant or major storage or dissolver tanks. This would pinpoint the problem in the case of discrepancy in the overall plant material balance.

The accountability system will ultimately be under the control of the plant computer, and the plant computer will perform the bookkeeping of the nuclear fuels and inform the operator in case of discrepancy in any section of the plant.

4. Process Control. The idea of plant process control using nondestructive systems has been proven to be useful and advantageous. This was discussed briefly in Chapter III in the Hanford Purex Plant.

Hanford Purex Plant uses nondestructive systems mainly for manual process control. Nondestructive systems can be improved and used for automatic process control in the reference LMFBR fuel reprocessing plant.

Major Assay Areas

Major areas where nondestructive assay of fissile and fertile materials is essential and have been selected and described separately below. The particular type and techniques for these nondestructive assay monitors will

be discussed in the following section. The possible location of the major assay areas will be shown on Figure 10. This figure is an adoption and simplification from a more detailed material balance flow sheet.[37]

1. Head-End Monitoring. Monitoring the fuel rods and subassemblies at the head-end of the fuel reprocessing plant as they are received and before reprocessing is one of the essential tasks of the plant accountability system. These monitors would account for the amount of fuel materials entering the fuel reprocessing plant. The possible locations of Head-END Monitors (HEM) are indicated on Figure 10.

2. Dissolver System Monitors. As it is shown on Figure 10 after voloxidation stage, there are two states of dissolution where the sheared fuel is treated with nitric acid and dissolved in large tanks. The entrance and exit of the dissolution stage must be monitored for plutonium and uranium. The possible location of Dissolver System Monitors (DSM) are indicated on Figure 10. The DSM also includes the criticality monitors on each tank. The DSM also includes the criticality monitors on each tank. The DSM monitors will provide information for the purpose of criticality, accountability, and process control.

3. Discarded Hull Monitors. Discarded hulls are the waste products of the shearing and the dissolution stage (see Figure 10). These hulls consist of cladding materials, spacers, stub ends and the fuel assembly head and end hardware which are passed to the waste treatment system. A nondestructive assay of these materials is required to ensure adequate dissolution of fuel materials. The location of Discarded Hull Monitors (DHM) are indicated on Figure 10. These monitors would provide information for the plant accountability system and process control.

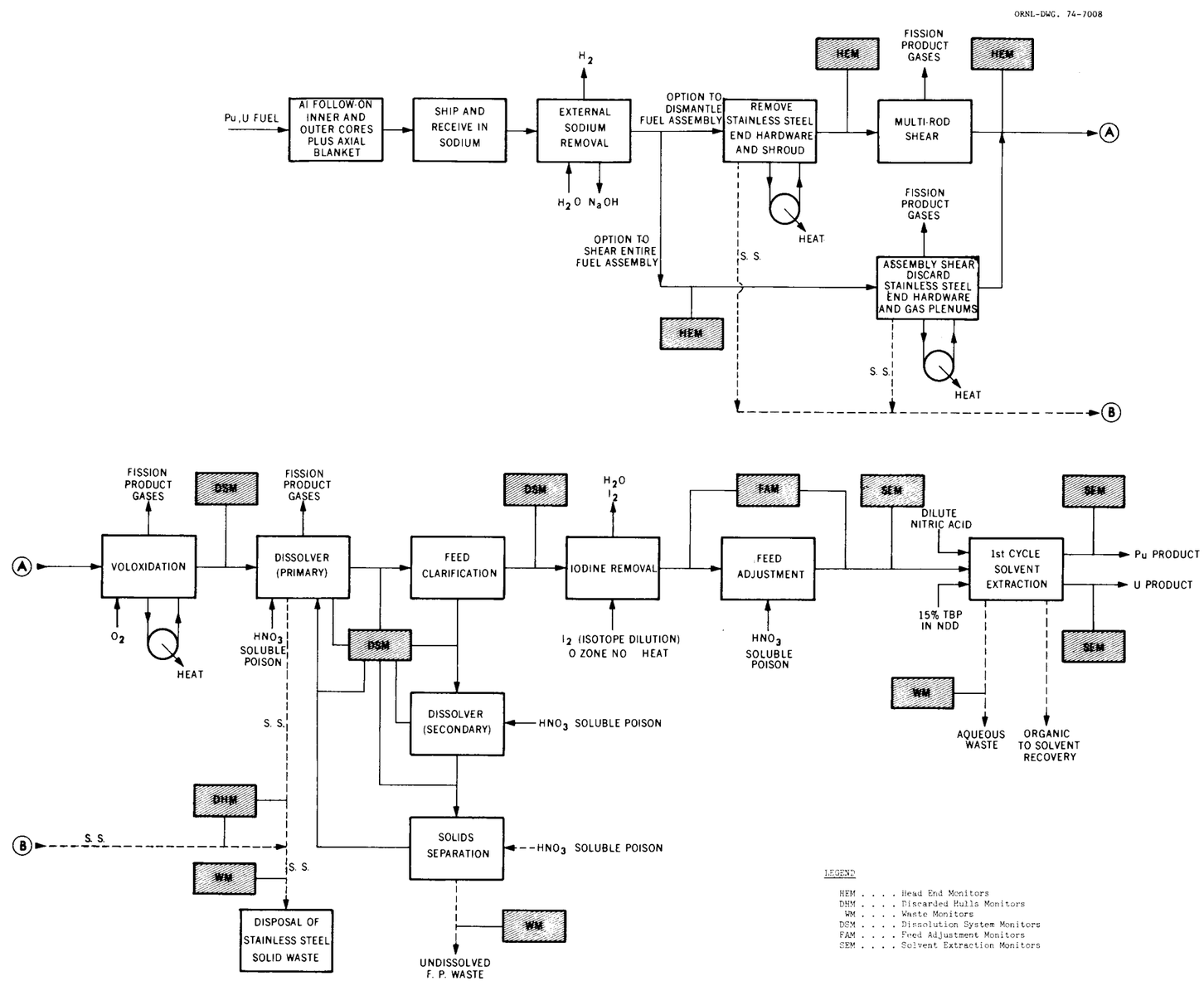

Figure 10. A Flow Diagram of the Reference Fuel Reprocessing Plant.

4. Waste Treatment System. The input to the waste treatment system and the output of the waste treatment system also needs to be assayed for plutonium and uranium. This assay is for the purpose of accountability of the trace amount of economically unrecoverable plutonium and low-enriched uranium which are present in the waste materials. The location of the waste system input monitors (WM) are shown on Figure 10.

5. Feed Adjustment Monitors. The feed adjustment system further dilutes the dissolved fuel and adjusts the solution valence and concentration to the proper specification. The tanks in the feed adjustment system must be monitored for criticality. The input and output streams of the feed adjustment system must also be assayed to prevent any accumulation of nuclear fuels. The location of the feed adjustment monitor (FAM) is shown on Figure 10.

6. Solvent Extraction System Monitors. The input and output of the solvent extraction system must also be monitored. This accounts for the amount of highly purified plutonium and uranium which is leaving from the reprocessing plant and is given back to the reactor customer. Solvent extraction monitors are indicated by SEM on Figure 10.

7. Miscellaneous Monitoring Stations. The assurance of desired plant operation is also of major concern. Nondestructive assay can be used for the determination of various liquid concentration or liquid levels throughout the reprocessing plant. This with other process monitors such as flow meters, mechanical level indicator, etc. can be used to achieve the desired plant operation.

From the safeguards standpoint, every exit stream from the plant such as personnel exit, water stream, sewage outlet, etc. must be monitored for

uranium and plutonium. This would warn the plant security of any alleged theft, leakage, or spill of nuclear fuels.

IV. PROPOSED USE OF VARIOUS NONDESTRUCTIVE TECHNIQUES IN THE REFERENCE AFRP

The major assay points were identified in the previous section. In this section, various nondestructive techniques which were described in Chapter II are selected for use in the identified sections of the reference AFRP. The selection of these techniques have been based on the reported capabilities of the particular assay method, and the physical and radioactive condition of the fuel material under investigation. The recommended assay technique for each assay area is described separately below:

1. Head-End Monitoring. The spent fuel materials are highly radioactive, containing large amounts of radioactive fission products. Tables[32] IV and V show fission product activities in the core fuel and cladding as a function of cooling time. The nuclear fuel activity and isotopic contents of the core fuel which has a burn-up of 80,000 MWD/MT is shown in Tables[32] VI and VII. These tables show the magnitude of the fission product in the presence of the fuel materials which must be assayed. Since there is not any experimentally proven technique available for assay of spent fuel material with high burn-up, the following recommendations are suggestions which must be further analyzed.

As it can be seen on Figure 10, there are two options for shearing s spent fuel assemblies: A. assembly shearer and B. multi-rod shearer. In the case of assembly shearing, the possibility of nondestructive assay of an entire fuel assembly in or out of the shield is highly remote. The

TABLE IV

FISSION PRODUCT ACTIVITY OF SPENT LMFBR CORE FUEL AS A FUNCTION OF DECAY TIME

Burnup = 80,000 Mwd/metric ton

Specific power = 148.15 Mw/metric ton

Nuclide activities are given in curies per metric ton (U + Pu) charged to core

	On Discharge from Reactor	After Cooling Times of: 30 days	90 days	150 days	3 years	30 years
^{3}H	2,330	2,310	2,290	1,980	1,980	432
^{85}Kr	24,900	24,800	24,500	24,300	20,600	3,610
^{86}Rb	8,150	2,670	288	31		
^{89}Sr	2,240,000	1,500,000	674,000	303,000	1.01	
$^{90}Sr + ^{90}Y$	209,000	206,000	204,000	204,000	191,000	98,200
^{91}Y	3,080,000	2,170,000	527,000	7.56		
^{95}Zr	7,050,000	5,120,000	2,700,000	1,420,000	59.2	
^{95m}Nb	141,000	109,000	57,300	30,200	1.26	

TABLE IV (continued)

	On Discharge From Reactor	After Cooling Times of: 30 days	90 days	150 days	3 years	30 years
^{95}Nb	6,970,000	6,510,000	4,460,000	2,660,000	126	
$^{99}Mo + ^{99m}Tc$	13,950,000	8,510	0.00289			
$^{103}Ru + ^{103m}Rh$	14,480,000	8,570,000	3,000,000	1,049,000	0.0675	
$^{106}Ru + ^{106}Rh$	6,820,000	6,460,000	5,760,000	5,140,000	862,000	0.00698
^{110m}Ag	4,650	4,280	3,630	3,080	231	
^{110}Ag	323,000	557	472	401	300	
^{111}Ag	505,000	31,600	123	0.482		
^{113m}Cd	341	340	337	334	294	77.3
^{115m}Cd	954	558	224	85.0		
^{119m}Sn	49.9	46.0	38.9	32.9	2.39	
^{121m}Sn	142	142	142	142	138	108
^{123m}Sn	2,070	1,750	1,250	900	4.74	
^{125}Sn	153,000	16,700	200	2.40		
^{125}Sb	50,500	50,700	48,800	46,700	24,000	23.4
^{125m}Te	17,100	17,900	18.700	18,600	9,960	9.7
^{126}Sb	10,200	1,940	73.8	6.85	4.36	4.36

TABLE IV (continued)

	On Discharge From Reactor	After Cooling Times of: 30 days	90 days	150 days	3 years	30 years
^{127}Sb	846,000	4,040	0.0888			
$^{127m}Te + ^{127}Te$	1,023,000	315,000	213,000	145,000	354	
^{129m}Te	818,000	446,000	131,000	38,600		
^{129}Te	1,960,000	286,000	84,100	24,800		
^{129}I	0.129	0.131	0.132	0.133	0.133	0.133
^{131}I	4,320,000	336,000	1,920	10.9		
^{131m}Xe	45,100	15,100	581	17.9		
$^{132}Te + ^{132}I$	12,140,000	20,500	0.0583			
^{133}Xe	7,920,000	181,000	67.5	0.0252		
^{134}Cs	78,600	76,500	72,400	68,400	28,500	3.16
^{136}Cs	365,000	73,800	3,010	123		
$^{137}Cs + ^{137m}Ba$	515,000	514,000	512,000	510,000	480,000	257,000
$^{140}Ba + ^{140}La$	12,950,000	2,690,000	104,500	4,060		
^{141}Ce	6,760,000	3,580,000	991,000	275,000		
^{143}Pr	6,380,000	1,850,000	89,000	4,270		
$^{144}Ce + ^{144}Pr$	6,820,000	6,180,000	5,340,000	4,620,000	458,000	

TABLE IV (continued)

	On Discharge From Reactor	After Cooling Times of: 30 days	90 days	150 days	3 years	30 years
^{147}Nd	2,830,000	434,000	10,300	242		
^{147}Pm	812,000	822,000	792,000	758,000	382,000	302
^{48m}Pm	177,000	108,000	40,000	14,900		
^{151}Sm	10,900	10,900	10,900	10,800	10,600	8,620
^{154}Eu	2,530	2,520	2,500	2,490	2,220	690
^{155}Eu	209,000	202,000	190,000	178,000	66,200	2.14
^{156}Eu	304,000	77,600	4,850	303		
^{160}Tb	34,100	25,600	14,400	8,070	0.906	
^{161}Tb	47,400	2,330	5.61	0.0135		
$^{152}Gd + {}^{162m}Tb$	24,200	22,800	20,400	18,140	3,020	
Total curies/metric ton	621,000,000	48,800,000	26,800,000	18,200,000	2,540,000	370,000
Beta power, w/metric ton	4,140,000	100,000	62,100	48,700	6,980	586
Gamma power, w/metric ton	2,210,000	95,600	43,900	25,700	1,840	494

TABLE V

CLADDING ACTIVITY OF SPENT LMFBR CORE FUEL AS A FUNCTION OF DECAY TIME

Burnup = 80,000 Mwd/metric ton

Specific power = 148.15 Mw/metric ton

Nuclide activities are given in curies per metric ton (U + Pu) charged to core

	On Discharge From Reactor	After Cooling Times of: 30 days	90 days	150 days	3 years	30 years
^{14}C	0.0584	0.0584	0.0584	0.0584	0.0583	0.0581
^{32}P	2,310	539	29.4	1.61		
^{33}P	13.5	5.86	1.11	0.210		
^{51}Cr	61,700	29,200	6,550	1,470		
^{54}Mn	150,000	140,000	122,000	107,000	12,200	
^{55}Fe	76,000	74,300	71,200	68,100	34,100	25.5
^{59}Fe	10,300	6,520	2,590	1,030		
^{53}Co	410,000	307,000	171,000	95,500	10.00	
^{60}Co	1,350	1,330	1,310	1,280	908	25.9
^{59}Ni	2.13	2.13	2.13	2.13	2.13	2.13
^{63}Ni	67.8	67.7	67.6	67.6	67.3	54.1
Total	1,270,000	559,000	375,000	274,000	47,400	108

TABLE VI

RADIOACTIVITY OF ACTINIDES IN SPEND LMFBR CORE FUEL AS A FUNCTION OF DECAY TIME

Burnup = 80,000 Mwd/metric ton

Specific power = 148.15 Mw/metric ton

Nuclide activities are given in curies per metric ton (U + Pu) charged to core

	Charged to Reactor	Discharged from Reactor	After Cooling Times of:				
			30 days	90 days	150 days	3 years	30 years
^{238}Th + daughters	0	0.00519	0.0060	0.00816	0.0107	0.0744	0.202
^{232}U	0	0.00595	0.00668	0.00812	0.00949	0.0249	0.0337
^{234}U	0	0.135	0.142	0.156	0.171	0.397	2.52
^{237}U	0	302,000	13,900	29.2	0.0617		
^{238}U	0.260	0.239	0.239	0.239	0.239	0.239	0.239
^{237}Np	0	0.124	0.127	0.127	0.127	0.134	0.391
^{239}Np	0	81,500,000	11,900	137	137	137	136
^{236}Pu	0	0.946	0.931	0.894	0.859	0.458	0.000643
^{238}Pu	43,800	30,700	30,800	31,000	31,100	31,000	25,200

TABLE VI (continued)

	Charged to Reactor	Discharged from Reactor	After Cooling Times of: 30 days	90 days	150 days	3 years	30 years
^{239}Pu	7,940	7,120	7,150	7,150	7,150	7,150	7,140
^{240}Pu	11,400	11,600	11,600	11,600	11,600	11,500	11,500
^{241}Pu	2,970,000	1,660,000	1,650,000	1,640,000	1,620,000	1,420,000	325,000
^{242}Pu	34.2	35.2	35.2	35.2	35.2	35.2	35.2
^{241}Am	0	4,120	4.320	4,730	5,140	11,100	40,500
^{242m}Am	0	239	239	239	239	236	209
^{242}Am	0	393,000	239	239	239	236	209
^{243}Am	0	137	137	137	137	137	136
^{242}Cm	0	204,000	181,000	140,000	109,000	2,130	171
^{243}Cm	0	107	107	106	106	100	55.7
^{244}Cm	0	3,430	3,420	3,400	3,380	3,060	1,090
Total	3,030,000	167,000,000	1,920,000	1,840,000	1,790,000	1,480,000	422,000

TABLE VII

ISOTOPIC COMPOSITION OF ACTINIDES IN SPENT LMFBR CORE FUEL AS A FUNCTION OF DECAY TIME

Burnup = 80,000 Mwd/metric ton

Specific power = 148.15 Mw/metric ton

Nuclide concentrations are given in grams per metric ton (U + Pu) charged to core

	As Charged to Reactor	On Discharge from Reactor	After Cooling Times of: 30 days	90 days	150 days	3 years	30 years
^{4}He	0	1.66	1.82	2.10	2.33	4.10	20.5
^{233}U	0	0.00122	0.00122	0.00122	0.00122	0.00122	0.00122
^{234}U	0	21.8	22.9	25.2	27.6	64.2	407
^{235}U	0	6.18	6.44	6.98	7.51	15.9	104
^{236}U	0	8.72	9.15	10.0	10.9	24.6	167
^{238}U	782,000	719,000	719,000	719,000	719,000	719,000	719,000
^{237}Np	0	176	179	180	180	190	555
^{236}Pu	0	0.00178	0.00175	0.00168	0.00162	0.00036	0.0000012
^{238}Pu	2,590	1,820	1,830	1,840	1,840	1,840	1,490
^{239}Pu	130,000	116,000	117,000	117,000	117,000	117,000	116,000
^{240}Pu	51,800	52,400	52,400	52,400	52,400	52,400	52,300
^{241}Pu	26,000	14,500	14,500	14,400	14,200	14,400	2,940

TABLE VII (continued)

	As Charged to Reactor	On Discharge from Reactor	After Cooling Times of: 30 days	90 days	150 days	3 years	30 years
^{242}Pu	8,760	9,020	9,020	9,020	9,020	9,020	9.020
^{241}Am	0	1,270	1,330	1,460	1,590	3,410	12,500
^{242}Am	0	24.6	24.6	24.6	24.6	24.3	21.5
^{243}Am	0	710	711	711	711	710	709
^{242}Cm	0	61.6	54.6	42.3	32.8	0.645	0.0517
^{243}Cm	0	2.32	2.32	2.31	2.30	2.17	1.21
^{244}Cm	0	42.3	42.2	41.9	41.7	37.7	13.4
Total	1,000,000	915,000	915,000	915,000	915,000	915,000	915,000

main reason is the unusually high radiation background (γ, α, η, β) up to 10^6 r/hr from a complete fuel assembly. Also, the high density of the fuel assembly will introduce discrepancies in assay results, this has been the case in the assay of non-radioactive large and dense samples. The nondestructive assay, therefore, must be performed after the shearing process of the entire assembly. In the case of multi-rod shearing, the assay of a single or an assay of fuel rods would be more probable, since the radiation background from a single or an assay of fuel rods is less than that of an entire spent fuel assembly and the sample is smaller.

From the available nondestructive assay techniques discussed in Chapter II, three methods are selected as potential measurement techniques for assay of LMFBR type spent fuels: A. active neutron interrogation counting prompt neutrons, B. active neutron interrogation counting short lived delayed gamma rays, and C. passive gamma ray spectroscopy counting high energy gamma rays of (^{144}Ce + ^{144}Pr). Each of these three techniques will be discussed separately below.

A. In active neutron interrogation counting prompt neutrons, a large subthreshold neutron source such as ^{124}Sb-Be, described in Chapter II is required to induce fission and over-ride the background neutron source. The problems which must be resolved are the size of the neutron source and the sensitivity of the detection system.

B. The active neutron interrogation counting short lived delayed gamma rays is also possible since the number of short lived delayed gamma rays are considerably higher than the background

gamma rays. This is shown on Figures 11 and 12. The problems here are also neutron source strength determination and the evaluation of the sensitivity of the detection system.

C. It can also be seen from Figures 11 and 12 that in the energy range of 2.5-to-2.75 MeV to 10-to-60-day cooled fuel has a peak which is directly related to the presence of (^{144}Ce + ^{144}Pr). The (^{144}Ce + ^{144}Pr) will stay with plutonium up to the solvent extraction stage, so it is an indirect measure of the amount of plutonium present. The gamma ray background interference (gamma pileup) and signal to noise ratio which have a direct effect on the detection system sensitivity must be investigated to insure the usefulness of this assay system.

2. Dissolver System Monitors. There are five types of monitors shown on Figure 10 for the dissolver system: A. DSM at the inlet to the dissolver system, B. DSM internal to the dissolver system, C. DSM at the outlet of the dissolved solution, D. DHM from the primary dissolution stage, and E. WM from the solid separation stage. In this section, Dissolver System Monitors (DSM) are discussed and the Discarded Hull Monitor (DHM) and Waste Monitor (WM) will be discussed later.

The inlet to the primary dissolution stage must be monitored for the amount of plutonium and uranium entering. The fuel is in the sheared form freed from fission product gases as a result of the voloxidation stage. The techniques recommended for the HEM monitors will also be applicable here.

The internal components of the dissolver system consists of several tanks and separators which the nitric acid is passed through and the

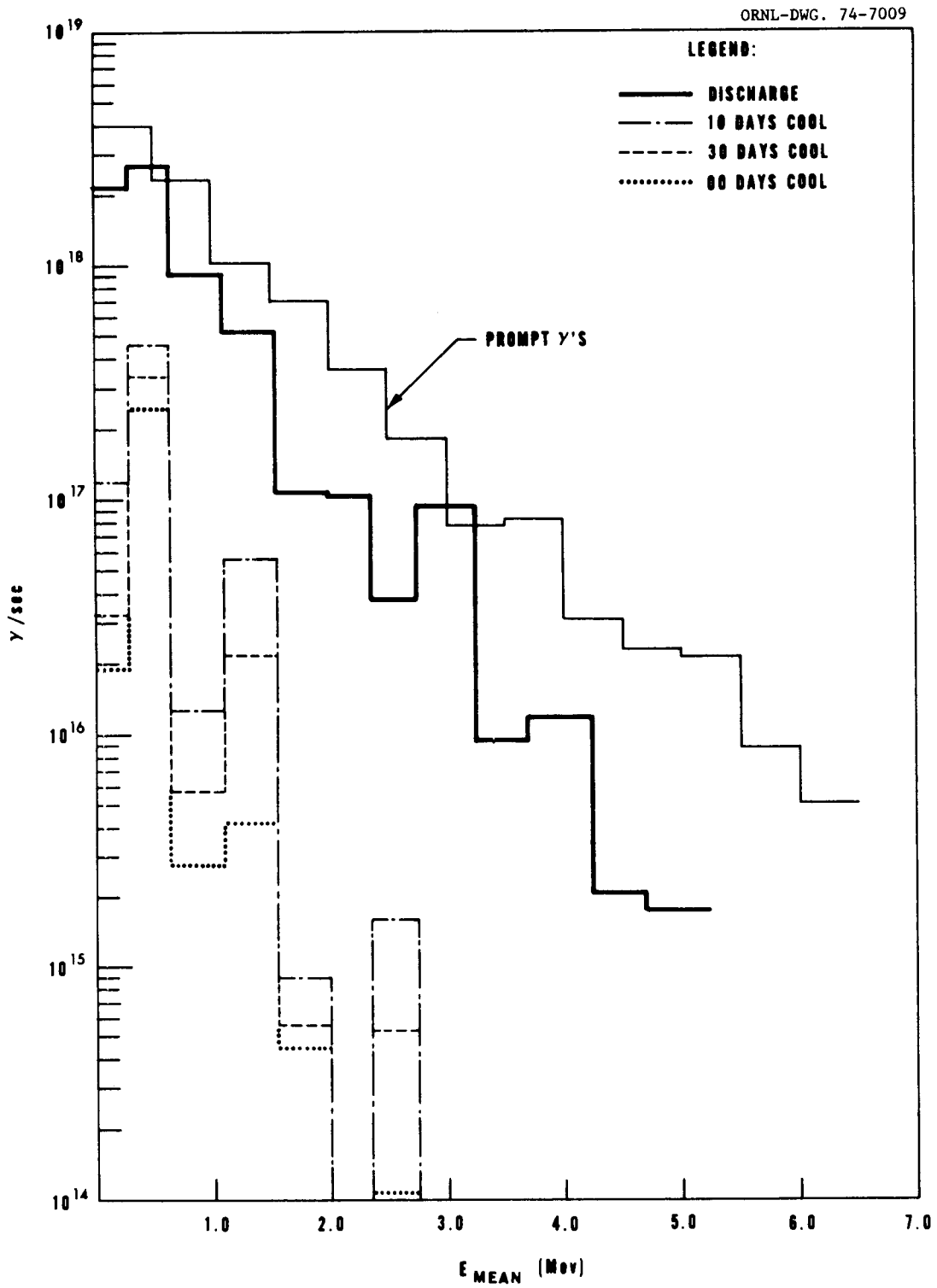

Figure 11. Total Gamma Spectrum in Core (LMFBR-fuel).

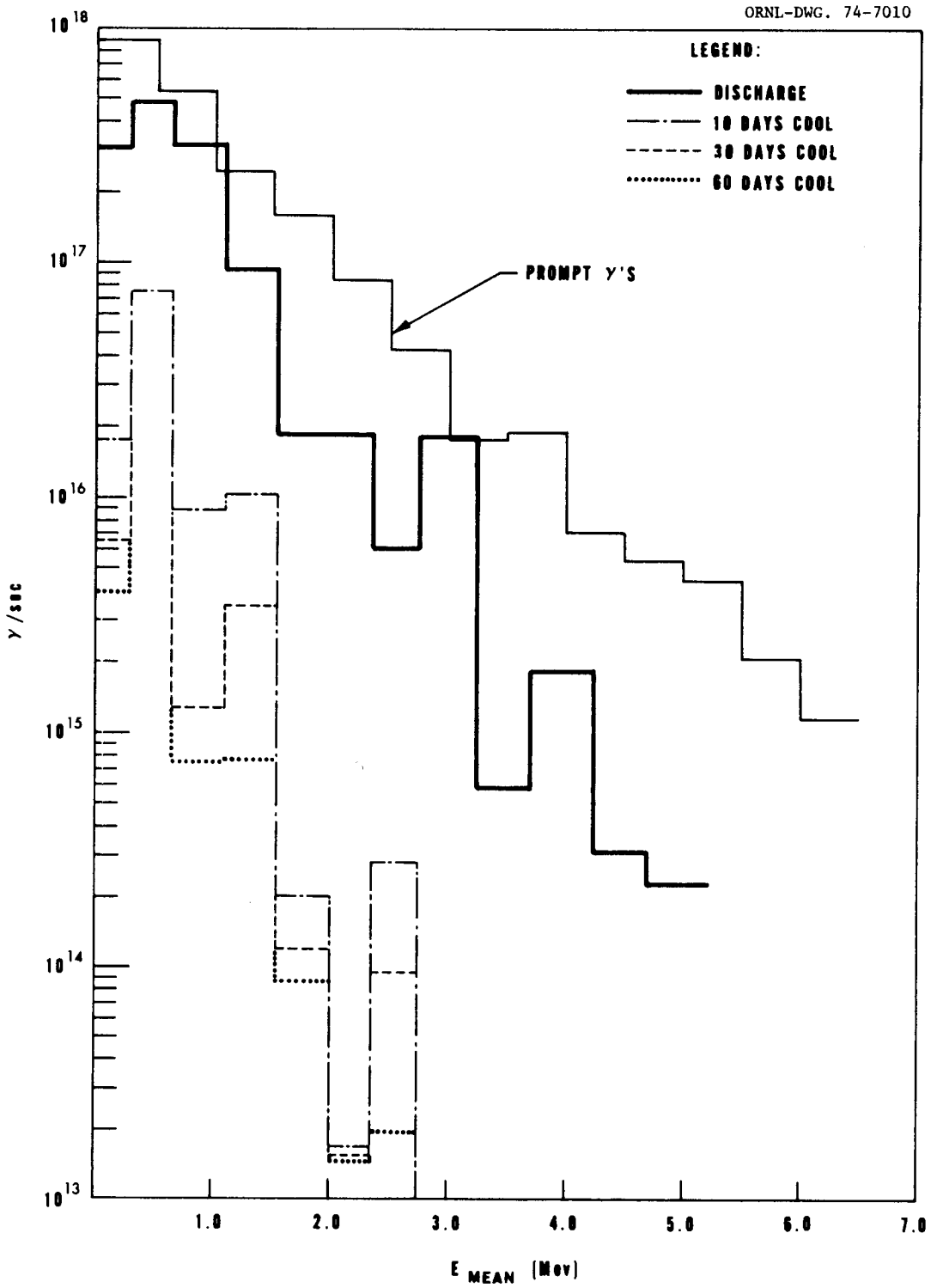

Figure 12. Total Gamma Spectrum in Blanket (LMFBR-fuel).

dissolved plutonium and uranium nitrite is obtained. The inlet and outlet of every tank containing fuel must be assayed. This can be done by diversion of a small amount of the flow stream to an assay station and the recommended assay technique is the same as DHM monitors. Since the fuel is not lost in any tank except to the waste stream which is monitored, the ratio of the inlet and outlet assay must stay constant. This can control the amount of poison added to a dissolver tank in the case of large fuel concentrations. A trend analyses of these ratios or the amount of poison added can indicate if precipitation is occuring in a particular tank which would control the flow of acid in that tank.

Neutron monitors can be used on a given tank for the purpose of criticality prevention and control of poison addition. This allowable neutron level must be determined separately for each tank. This can be do done by calculation or experimentation.

The degree of subcriticality of a particular tank may also be determined using source multiplication techniques.[38,39] Source multiplication techniques have been used to determine the subcriticality level of reactors.

The level of solids and the level of liquid in the dissolver system tanks is also of interest for various flow adjustments. This can be done by several stationary or a moveable gamma ray detector moving along the side of the tank. Since the gamma ray background will change at the solid liquid and liquid air interface, a comparison of the detector outputs can reveal the interface locations.

The dissolved fuel outlet of the dissolver system also must be monitored. The radioactive level of the stream at this stage is lower

than that of the inlet to the dissolver system. Since the stream is well mixed, a small amount of the stream can be diverted to an assay station and assayed using passive gamma ray or active neutron interrogation detecting prompt gamma rays or prompt neutrons. The neutron detection may be successful because of lower neutron background of the small sample from the stream.

An overall trend analysis of all the inlets and outlets of the dissolver system can determine whether precipitation of the fuel material is occuring or not.

3. Discarded Hulls. For the assurance of complete dissolution, the discarded hulls must be assayed. An active neutron technique using ^{252}Cf source and detecting prompt neutrons would be applicable here to detect trapped fuel materials. Discarded hulls are also highly radioactive and contain small amounts of fission products mostly in the cladding materials. This is the result of fission product migration to cladding materials.

4. Waste Treatment System. All waste leaving the plant must be assayed for plutonium and uranium. These wastes are almost entirely in solid form in various asphalts and glass matrices and they are, in general, highly radioactive. The nondestructive method applicable would be active neutron methods detecting delayed or prompt fission neutrons. A passive neutron technique would be possible in cases where large amounts of fuel materials are expected in a particular waste stream. The assay of the waste stream is important for the overall accountability and safeguards of the nuclear fuel materials present in the reprocessing plant.

5. Feed Adjustment Monitors. The inlet and outlet of the feed adjustment stage must be monitored to prevent precipitation and the tanks in this stage must be equipped with the criticality monitors. The techniques which were recommended for the dissolver system also can be used at this stage.

6. Solvent Extraction Monitors. In this stage, the plutonium and uranium of high and low enrichment are separated and stored in various product containers and solutions ready for shipment. Since these nuclear fuels are highly purified, they must be constantly monitored for criticality or stored in geometrically safe (for criticality) containers. Various techniques such as neutron monitors and source multiplication techniques which were discussed before can be used for criticality monitoring at this stage.

An accurate assay of plutonium and uranium products at the outlet of this stage is vital for the accountability purposes. The products are considerably low in radioactivity so established assay techniques are applicable. A passive neutron plus a passive gamma ray measurement on the plutonium product determines the amount of ^{239}Pu and ^{240}Pu. A total gamma ray measurement or any type of active neutron technique can be used for assay of high or low enriched uranium. Also, a measurement at the inlet to the solvent extraction system similar to techniques used for the FAM and a comparison with the outlet assay results would be valuable in the determination of the precipitation, or leakage at this stage.

7. Miscellaneous Monitoring Stations. Process monitors of the Hanford Purex Plant which were described in Chapter III can be adopted with

modifications for the assurance of normal plant operation. These, of course, will be accompanied with various mechanical monitors throughout the plant.

From the safeguards standpoint, doorway monitors are required at each exit point of the plant. Also, alpha monitors or gamma monitors can be placed on every stream exit from the plant.

CHAPTER V

SUMMARY

In order to recommend nondestructive instruments and techniques for the purposes of safety, safeguards, accountability, and process control in the LMFBR Aqueous Fuel Reprocessing plant, the state-of-art in nondestructive assay field was investigated. Also, the nondestructive instruments of an operating Light Water Reactor fuel reprocessing plant (namely the Hanford Purex Plant) were set forth. Afterwards, the reference LMFBR Aqueous Fuel Reprocessing plant was described. The assay areas were then identified, and the best suitable assay techniques were recommended.

The nondestructive assay techniques are divided in two major categories: passive methods and active methods. Passive techniques are usually inexpensive to set-up and operate. Consequently, one has a limited variety of options, namely gamma ray spectrometry and passive neutron counting. Active methods are more expensive mainly because of source requirements, either gamma ray or neutron source. Therefore, one has the choice of selecting a particular technique from a variety of methods for one specific assay problem.

Investigation of Hanford Purex Plant nondestructive monitors indicates that nondestructive assay systems have proven to be useful and advantageous in their limited use of ciriticality control and manual feed adjustments in various streams.

The high throughput (5 Mt/day) and low inventory goal of the future LMFBR fuel reprocessing plant suggests a definite nondestructive instrumentation need for the purpose of safety, safeguards, accountability, and

process control. Unfortunately, the present nondestructive assay systems are inadequate for the majority of the recommended uses in the reference fuel reprocessing plant. While most of the present nondestructive assay techniques have the irradiated fuel assay potential, the development efforts presently have been oriented toward assay of unirradiated fuel materials. These efforts must now be redirected toward assay of irradiated fuels. For the particular assay problems of the spent LMFBR fuels in the reference fuel reprocessing plant, three techniques were proposed: 1. active neutron subthreshold interrogation counting prompt neutrons, 2. active neutron interrogation counting short lived delayed gamma rays, and 3. passive gamma ray spectroscopy detecting high energy lines of (^{144}Ce + ^{144}Pr). Future work should be directed toward the analytical and experimental demonstration of the feasibility of these techniques using samples that simulate the high radiation background of the spent LMFBR fuels. Following these demonstrations, optimal designs having high reliability can be accomplished.

LIST OF REFERENCES

1. Keepin, G. R., et al, "Neutron Interrogation and Nondestructive Assay of Fissionable Materials," Los Alamos Scientific Laboratory, LA-4523-MS (1970).

2. Bramblett, R. L., et al, "Gamma Ray Spectroscopy," Gulf Radiation Technology GULF-RT-A12028.

3. Inman, G., "Research and Development for Safeguards," OSMM, USAEC, WASH-1122 (1968).

4. Parker, J. L., T. D. Reilly, R. B. Walton, D. B. Smith, and L. V. East, "Attenuation-Corrected Passive Gamma Assay," Los Alamos Scientific Laboratory, LA-4705-MS (1971).

5. Gunderson, R. P., F. A. Cohen, and L. P. Zucker, Proc. of the 13th Annual Meeting of the Institute of Nuclear Material Management (1972).

6. Gumnink, R., "Pu Isotopic Measurement by Gamma-Ray Spectrometry," UCRL-75105 (1973).

7. Omohundro, R. J., and F. A. Marchetti, "A Prototype Coincidence Neutron Counter for Instrumentational Safeguards and Arms Control Application," NRL-2005 (1969).

8. Foley, J. E., Nuclear Safeguards R and D, LA-4605-MS (1970), p. 24.

9. Sher, R., "Operating Characteristics of a Neutron Well Coincidence Counter," BNL-50332 (January 1972).

10. Menlove, H. O. and R. B. Walton, Nuclear Safeguards R and D, LA-4457-MS (1970), p. 26.

11. Bramblett, R. L., et al, "Application of Photoinduced Reactions to Nuclear Materials Safeguards Problems," Gulf General Atomics Quarterly Progress Report GA-9077, September 1968.

12. Gozani, T., et al, "Application of Photoinduced Reactions to Nuclear Materials Safeguards Problems," Gulf Radiation Technology Quarterly Progress Report, GA-10272, July 1970.

13. Bramblett, R. L., et al, "Application of Photoinduced Reactions to Nuclear Materials Safeguards Problems," Gulf Radiation Technology Quarterly Progress Report, GA-9614, July 1969.

14. Krich, M. S. and H. E. Evans, Nuclear Science and Engineering 47, pp. 311-318 (1972).

15. Keepin, G. R., et al, Nuclear Safeguards R and D, LA-4162-MS (1969), p. 14.

16. Keepin, G. R., et al, Nuclear Safeguards R and D, LA-4705-MS (1970), p. 20.

17. Evans, A. E., "The Expanding Role of the Small Van de Graaff in Nuclear Nondestructive Analysis," IEEE Transaction on Nuclear Science, NS-20, No. 3, p. 989 (1973).

18. Masters, C. F., M. M. Thrope, and D. B. Smith, Nuclear Science and Engineering, 36, p. 202 (1969)

19. Augustson, R. H., H. W. Menlove, C. N. Henry, C. F. Masters, and G. R. Keepin, Trans. Am. Nucl. Soc. 11, p. 660 (1968).

20. Menlove, H. O., R. A. Forster, J. L. Parker, and D. B. Smith, "Californium-252 Assay Systems for FBR-Type Fuel," Nucl. Tech. 20, p. 124 (1973).

21. Gozani, T., "Detection Identification and Analysis of Fissionable Isotopes," U. S. Patent No. 3, 456,113 (1971).

22. Foley, J. E., "Application of the Random Source Interrogation System (Random Driver) at the Oak Ridge Y-12 Plant," LA-5078-MS (1972).

23. Foley, J. E., "Random Source Interrogation System," U. S. Patent No. 3, 736, 429 (1972).

24. Menlove, H. O., R. A. Forster, and D. L. Matthews, "A Photoneutron Antimony-124-Beryllium System for Fissile Materials Assay," Nucl. Tech. 19, pp. 181-187, September 1973.

25. Lanes, H. M. and R. Y. Lyon, "Hanford On-Line Monitors," Proc. of the 20th Conference on Remote Systems Technology (1972).

26. Roski, O. H., "The Optimization of Cerium-Activated Glass Alpha Sensors," BNWL-CC-2254 (1969).

27. Upson, U. L., "Scintillation Glasses for Alpha Counting," Hanford Words, HW-72512 (1962).

28. Dierks, R. D. and J. L. Russell, "2AF Sofium Nitrite Monitors--Interim Report," BNWL-CC-2396 (1970).

29. Dierks, R. D. and F. A. Scott, "Photometers for Continuous Determination of Uranium in Radioactive Process Streams," Anal. Chem. 32, p. 268 (1960).

30. A Conceptual Design Study of a Fluoride Volatility Plant for Reprocessing LMFBR Fuels. ANL-7583, July 1969.

31. Runion, T. C. and W. H. Lewis, "Construction and Operation of the West Valley Reprocessing Plant," The AICHE Symposium on Recent Advances in Reprocessing of Irradiated Fuel, New York City, November 1967.

32. Aqueous Processing of LMFBR Fuel-Technical Assessment and Experimental Program Definition, ORNL-4436 (June 1970).

33. Unger, W. E., Personal Communication, Chemical Technology Division of Oak Ridge National Laboratory, 1973.

34. Chemical Technology Division Annual Progress Report, ORNL-4422 (May 1969).

35. Chemical Technology Division Annual Progress Report, ORNL-3314 (June 1962).

36. Chemical Technology Division Annual Progress Report, ORNL-3452 (May 1963).

37. Clinton, S. D., Personal Communication, Chemical Technology Division of Oak Ridge National Laboratory, 1974.

38. Keepin, G. R., Physics of Nuclear Kinetics, Addison-Wesley Publication Company, 1965.

39. Walters, J. F., "Detector Response to the Subcritical Reactors," Nuclear App., Vol. 3, May 1967.

40. Harrington, F. E., Personal Communication, Chemical Technology Division of Oak Ridge National Laboratory, 1972.

ORNL-TM-4586
UC-79c,-79d,
and-79m

INTERNAL DISTRIBUTION

1-5. N. J. Ackermann, Jr.
6. R. K. Adams
7. J. W. Allen
8. C. J. Borkowski
9. H. R. Brashear
10. M. M. Chiles
11. W. T. Clay
12. F. L. Culler
13. P. M. Dodd
14. G. F. Flanagan
15. D. N. Fry
16. W. O. Harms
17. F. E. Harrington
18. A. R. Irvine
19. J. D. Jenkins
20. R. C. Kryter
21. R. A. Lillie
22. F. C. Maienschein
23. M. V. Mathis
24. T. W. Medlin
25-29. J. T. Mihalczo
30. F. R. Mynatt
31. E. L. Nicholson
32. L. C. Oakes
33. V. K. Paré
34-38. J. C. Robinson
39. G. S. Sadowski
40. D. L. Selby
41. D. B. Simpson
42-46. F. Shahrokhi
47. E. T. Tomlinson
48. D. B. Trauger
49-53. W. E. Unger
54. C. D. Watson
55-56. Central Research Library
57. ORNL — Y-12 Technical Library Document Reference Section
58-60. Laboratory Records Department
61. Laboratory Records, ORNL R.C.
62. ORNL Patent Office

EXTERNAL DISTRIBUTION

63. Research and Technical Support Division, ORO
64. Director, Reactor Division, ORO
65-66. Director, Division of Reactor Research and Development, U.S. Atomic Energy Commission, Washington, D.C. 20545
67-336. Given distribution as shown in TID-4500 under UC-79, -79c, -79d, and -79m category (25 copies — NTIS)