ORNL
MASTER COPY

C7 74-11-41

(GCR: 74-33)

SOLID WASTE HANDLING POLICY FOR HTGR-FRPP

J. D. Jenkins

Oak Ridge National Laboratory

Notice

This document is an internal report of the GCR Programs and contains preliminary and tentative information. It has not been given final patent clearance and the dissemination of its information is only for official use. No release to the public shall be made without the approval of the Law Department of Union Carbide Corporation Nuclear Division.

SOLID WASTE HANDLING POLICY FOR HTGR-FRPP

J. D. Jenkins

ABSTRACT

The types and quantities of solid uranium containing wastes anticipated from operation of the HTGR Refabrication Pilot Plant are described. Problems associated with returning high uranium content waste to Idaho for head-end reprocessing are discussed. Possible solutions to these problems are outlined, and areas requiring additional development work in the waste handling area are discussed. A solid waste policy for pilot plant operation covering reclamation of high uranium content waste by shipment to Allied Chemical Corporation and recoverable storage of low level waste at ORNL is proposed.

INTRODUCTION

During operation of the HTGR Refabrication Pilot Plant, substantial quantities of solid radioactive waste products will be generated. The bulk of the material (from the point of view of grams of ^{233}U) will be in the form of reject product material. In addition, α active fissile material will be present in process waste streams and will appear as contamination on combustible and noncombustible material removed from the cell.

Our current thinking is that the alpha contaminated waste from TURF can be segregated into two categories: high uranium content material consisting primarily of reject product and Q.C. samples, and low level waste material whose total gamma activity per cubic foot is less than that of 10 g of ^{233}U containing 500 ppm ^{232}U 90 days old.

The National HTGR Fuel Recycle Development Program envisions the recycle of usable quantities of fissile material as a necessary portion of the overall fuel recycle demonstration.[1] Since no facilities for the recycle of large quantities of reject material processed beyond the resin loading step are available at ORNL, such recycle will require the transfer of reject material generated in the TURF facility to Idaho for reprocessing. Accordingly, discussions were initiated with the Allied Chemical Corporation[2,3] to determine what forms of material could be handled by ACC and what actions would be necessary at both installations to affect recycle of the high uranium content reject materials.

The purpose of this document is to summarize the results of these discussions, to highlight certain problem areas which were uncovered as a result of the investigation and to describe the current solid waste handling policy for α active material generated in TURF to include recycle of certain materials to ACC for recovery.

HIGH URANIUM CONTENT WASTE

Table 1 below lists the average daily quantities of high uranium concentration reject material anticipated from the TURF product line based on our most recent calculations.[4] Of these materials, only the coated particles, carbonized rods, and the occasional rejected fuel element are compatable with the ACC head-end equipment without further treatment. Those materials which contain hydrocarbons (e.g., the reject dried loaded resin, the green rods, and the epoxy impregnated rods)

Table 1. Estimated Average Daily Production of High Uranium Content Waste Material

Material Form	g ^{233}U/day	Source
Loaded and Dried Resin	247	Resin loading reject and samples
Carbonized Resin[a]	161	Resin carbonization reject and samples
Converted Resin[a]	12	Resin conversion reject and samples
Coated Particles	530	Particle coating reject and samples
Green Rods	13	Reject rods, samples, and assay calibration standards
Carbonized Rods	11	QA samples
Reject Blocks[a]	12	Reject blocks
Coated Particles and Carbon	18	Coating chamber scrapings and fritts
Epoxy Impregnated Rods	0.15	Metallographic mounts
U_3O_8 Ash	3	Sample inspection station

[a]Routine production of this type of waste is not anticipated. Figures represent daily average but in fact an occasional infrequent large batch will have to be dealt with.

present problems, first, because the material might adhere to and gum up the head-end crushing equipment and, second, because incomplete combustion of the matrix material might lead to plugging of the dry filters on the downstream burners. The reject carbonized or converted but uncoated particles present a different problem in that the material is reactive in air. Consequently additional processing is probably necessary before the material can be canned and shipped to Idaho. These problems have not been resolved. However, some potential solutions, most of which will require additional study and development work, are discussed below.

Possible Solutions

Several alternatives exist for converting the dried loaded resin to a form acceptable to the head-end facility. In order of current preference, these are as follows. The reject resin could be accumulated under inert atmosphere until the campaign is ended and then processed as a single batch through the carbonization furnace and reduced to an inert form in a controlled oxidation facility. Such a facility is not currently included in the plant conceptual design. The possibility also exists that the reject dried loaded resin material can be stripped of uranium at TURF by contacting it with nitric acid. Equipment to affect this exchange is not currently included in the conceptual design nor is the efficiency of the resin stripping process known. To be effective, the stripping process would have to be efficient enough to allow the residual material to be treated as low level waste. A third alternative would be to process the resin through the carbonization and coating steps to convert the material to coated particle form. The effects of these operations on plant throughput and process costs will need to be evaluated if any of these options is considered.

Green rods can be converted to a form acceptable to ACC either by dissolving the matrix material and reclaiming the coated particles or by carbonizing the rods. Carbonization could be done either in an existing furnace, e.g., the coating or carbonization furnace, using special boats, or in a separate piece of equipment designed for that purpose. Implementation of either alternative will require additional study and development work.

The amount of fissile material contained in the epoxy metallographic mounts is small enough (0.15 g/day) that this material can be included in the archive sample can. This option will be implemented.

The reactive carbonized and converted particles present a special problem. Normal plant operation currently envisions no product upgrading after the carbonization or conversion steps and hence no reject material. Hence, during normal operation only the 6 g of this material per day which is extracted from the cell as samples will have to be dealt with. It is felt that this amount of material can be reduced to a nonreactive state by controlled oxidation in the sample inspection station prior to sending it to the reject material waste can. Some development work to

design equipment to achieve this will be needed. However provisions must be included to handle the situation when a whole batch of this type of material is rejected. Such situations would arise, for example, if the coating furnace failed after the conversion step but before the buffer coating was applied, or if the carbonization furnace malfunctioned part way through a cycle. In such situations, material containing as much as 3 kg of ^{233}U would have to be dealt with. In addition, if the decision is made to carbonize the reject dried loaded resin (see above), material containing approximately 250 g of ^{233}U will have to be dealt with daily or in an accumulated lot at the end of each campaign.

Possible options include storage of the material in special hoppers under an inert atmosphere until such time as it could be rendered non-reactive by controlled oxidation in a special facility or until a buffer coat could be applied.

No facility is included in the current conceptual design for controlled oxidation of the carbonized and converted material. A development effort will be required to implement this option. A third alternative is to can the material under inert gas at a special canning station and ship it as is to ACC. In this case, the head-end facility would have to incorporate appropriate equipment for uncanning and handling the reactive material. In addition, problems associated with the shipment of high level pyrophoric waste would have to be solved. Under current operating restrictions, this alternative does not appear attractive.

Proposed High Uranium Concentration Solid Waste Handling Policy

In view of the problem areas discussed above, it is not possible at this time to completely specify the quantities and forms of all high uranium content waste material which will be recycled to ACC for reclamation. Those material which are compatable with the head-end facilities at ACC, i.e., coated particles and carbonized rods, will be doubled canned in the reject material waste containers shown in Fig. 1, assayed for fissile content, and shipped to Idaho. No segregation of material will be done.

Additional development work is necessary to determine the impact that conversion of the remaining types of high uranium content waste to forms acceptable to the head-end equipment will have on the overall TURF demonstration program. These studies will be undertaken. If such conversion can be accomplished with minimal effort or if such conversion appears a necessary and integral part of the demonstration, then the necessary equipment will be incorporated and the converted material will be included with that already destined for Idaho. These decisions must await the results of the proposed studies.

PARTS LIST					
PART	DWG NO.	REQD	DESCRIPTION	STOCK SIZE	MATERIAL
1	THIS	1	DETAILED THIS DWG.		SEE DET.
2	↓	1	↓		↓
3	↓	1	↓		↓
4	↓	1	↓		↓

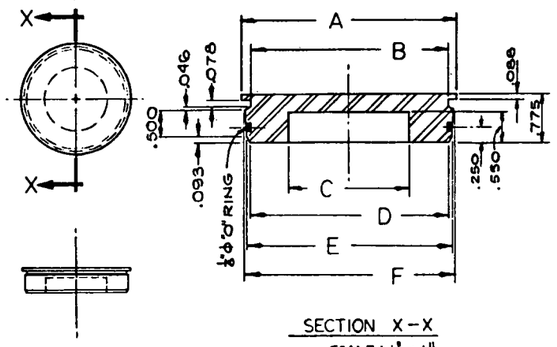

SECTION X-X
SCALE: 1" = 1"

PARTS 1 / 2
SCALE: 1/2" = 1"
MATERIAL — ALUMINUM

PART (OUTER) 1		NO. REQ'D
DIA. A	3.560 O.D.	200
DIA. B	3.248	↓
DIA. C	1.978 I.D.	
DIA. D	3.253	
DIA. E	3.356	
DIA. F	3.415	↓

PART (INNER) 2		NO. REQ'D
DIA. A	3.312 O.D.	200
DIA. B	3.062	
DIA. C	2.000 I.D.	
DIA. D	3.000	
DIA. E	3.108	
DIA. F	3.158	↓

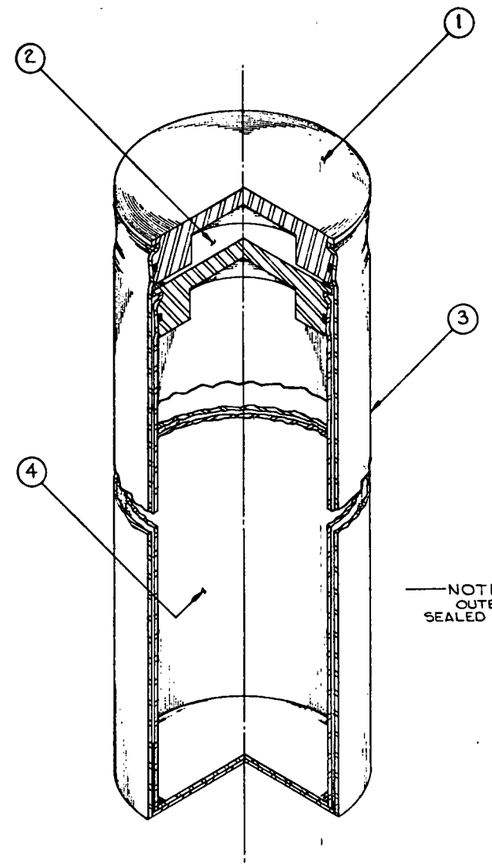

ASSEMBLY
NO SCALE

—NOTE—
OUTER AND INNER CAN SEALED BY MAGNAFORMING.

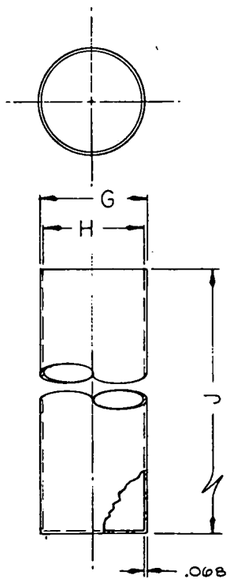

PARTS 3 / 4
SCALE: 1/2" = 1"
MATERIAL — ALUMINUM

PART (OUTER) 3		NO. REQ'D
DIA. G	3.505 O.D.	100
DIA. H	3.369 I.D.	↓
DIM. J	12.000	29

PART (INNER) 4		NO. REQ'D
DIA. G	3.264 O.D.	100
DIA. H	3.128 I.D.	↓
DIM. J	9.353	29

NO REPRESENTATION OR WARRANTY, EXPRESSED OR IMPLIED, IS MADE THAT THE USE OR DISCLOSURE OF ANY INFORMATION, APPARATUS, METHOD OR PROCESS DISCLOSED IN THESE DRAWINGS MAY NOT INFRINGE PRIVATE RIGHTS OF OTHERS. NO LIABILITY IS ASSUMED WITH RESPECT TO THE USE OF, OR FOR DAMAGES RESULTING FROM THE USE OF, ANY INFORMATION, APPARATUS, METHOD OR PROCESS DISCLOSED IN THESE DRAWINGS. THE DRAWINGS ARE BEING MADE AVAILABLE FOR INFORMATION TO BIDDER AND ARE NOT TO BE USED FOR OTHER PURPOSES, AND ARE TO BE RETURNED UPON REQUEST OF THE FORWARDING CONTRACTOR.

GENERAL SPECIFICATIONS
UNLESS OTHERWISE SPECIFIED:
1. BREAK ALL SHARP EDGES
2. TYPE, GRADE, OR FINISH OF MATERIAL MAY BE CHOSEN BY FABRICATOR.
3. MACHINED SURFACE FINISH SHALL NOT EXCEED: (ASA B46.1-1962) ✓

TOLERANCES UNLESS OTHERWISE SPECIFIED:
FRACTIONS ± —
DECIMALS ± .005
ANGLES ± —
SCALE: NOTED

NO.	REVISIONS				DATE	APPD	APPD
DRAWN J. LOWERY	DATE 5-1-74	SUBMITTED HUTTO	DATE	APPROVED	DATE		
DESIGNED	DATE	APPROVED	DATE	APPROVED	DATE		
CHECKED JARVIS	DATE 5-9-74	APPROVED	DATE	APPROVED	DATE		

REFERENCE DRAWINGS | NUMBER

OAK RIDGE NATIONAL LABORATORY
OPERATED BY
UNION CARBIDE CORPORATION
OAK RIDGE, TENNESSEE

HTGR-FRPP SYSTEM 9 BLDG. NO. 7930

REJECT FISSILE AND FERTILE MATERIAL STORAGE CAN CONCEPTUAL DESIGN

SUBMITTED | ACCEPTED | APPROVED

M 11416 EM 231 D REV. 0

PRELIMINARY

Fig. 1

LOW LEVEL WASTE

It is currently anticipated that the remainder of the contaminated solid waste will consists of material containing sufficiently low concentrations of uranium and other alpha active isotopes to allow it all to be lumped in a single low level waste category. This material will be further segregated into combustible and noncombustible categories before canning.

The low level combustible wastes include material generated during normal hot cell operation (e.g., manipulator boots, cloth wipes, etc.) and process related material peculiar to the fuel fabrication process. This latter material will consist of low level carbon-uranium mixtures which will be generated as a result of replacement of graphite furnace internals and clean out and solidification of furnace off-gas scrubber solvent recovery system. No attempt will be made to segregate these various types of combustible low level waste in the TURF facility. It is noted, however, that in a commercial integrated reprocessing and refabrication plant, the low level combustible waste would most probably be processed in a common low level waste incenerator.

It must be emphasized that additional development data are necessary before all quantities and forms of the low level waste can be completely specified. For example, the amount of material lost due to furnace blow over during the carbonization process is unknown, as is the eventual form that this material assumes after contact with the scrubber solution. Thus, construction and operation of prototype development equipment is necessary before the fissile content of the solidified waste from the off-gas scrubber traps can be quantified. Also, additional information is needed on the quantities of material adhering to coating furnace fritts and liners.

Table 2 indicates the currently estimated quantities of the various types of low level waste material which will be generated daily during TURF operation. Neither ORNL nor ACC has facilities for recovery of fissile material from combustible low level waste in the quantities anticipated. Accordingly, it is our intention[5] to contain both this and the noncombustible material appropriately for disposition in a retrievable storage facility.

Table 2. Estimated Daily Production of Combustible and Noncombustible Low Level Waste

Material Form	Quantity ft^3/day
Manipulator Boots	1.0
Miscellaneous Combustible (includes coating furnace fritts and liners)	9.0
Soot from Solvent Reclamation	0.6
Broken Equipment, Tools, etc. (Noncombustible)	1.0

REFERENCES

1. *Draft National HTGR Fuel Recycle Development Program Plan,* ORNL-4702, Rev. 1 (August 1973).

2. Letter: A. L. Lotts to A. P. Roeh; Subject: Thorium Utilization Program: Interface Between ORNL and ACC Waste Management Program (July 25, 1974).

3. Letter: A. P. Roeh to A. L. Lotts; Subject: ORNL Waste Streams from HTGR Refabrication Facility (September 11, 1974).

4. Letter: S. R. McNeany to Distribution; Subject: Uranium and Thorium Flow Rate Calculations for the HTGR-FRPP (September 18, 1974).

5. Letter: D. B. Trauger to A. L. Lotts; Subject: Your Memo of July 25, "Waste Handling Policy for HTGR-FRPP Waste Disposal System" (August 5, 1974).

DISTRIBUTION

GCR: 74-33

J. L. Anderson
S. J. Ball
R. L. Beatty
R. J. Beaver
A. L. Boch
R. A. Bradley
J. P. Callahan
D. A. Canonico
C. E. Clifford
T. E. Cole
J. A. Conlin
J. H. Coobs
D. Costanzo
F. C. Davis
B. C. Duggins
W. P. Eatherly
R. L. Egli/F. E. Dearing
D. E. Ferguson
Uri Gat
R. W. Glass
P. A. Haas
J. W. Hill
R. M. Hill, Jr.
F. J. Homan
J. P. Jarvis
J. D. Jenkins
P. R. Kasten
W. J. Lackey
T. B. Lindemer
A. L. Lotts
R. E. MacPherson
A. P. Malinauskas
W. R. Martin
K. J. Notz
L. C. Oakes
P. L. Rittenhouse
J. P. Sanders
Dunlap Scott
J. D. Sease
J. H. Shaffer
R. L. Shepard
J. W. Snider
R. S. Stone
M. Tobias
D. B. Trauger
J. E. Van Cleve
V.C.A. Vaughen
T. N. Washburn
J. R. Weir
G. D. Whitman
R. G. Wymer

EXTERNAL DISTRIBUTION

Director, Division of Reactor Research and Development, RRD-D
Assistant Director, Gas-Cooled Reactor Projects, RRD-G
Director, SCRPO, Canoga Park
Director, Engineering Division, ORO
Director, Research & Technical Support Division, ORO
Director, Reactor Division, ORO
Chief, Fuels Technology Branch, RRD-GF
Chief, Processing and Fabrication Branch, RRD-GP
SCRPO, San Diego
R. G. Bradley, ID
L. H. Brooks, GA
Joe Dugone, ACC
C. A. Heath, GA
M. E. Kantor, GA
A. P. Roeh, ACC
B. R. Wheeler, ID