ORNL
MASTER COPY

ORNL
CENTRAL FILES NUMBER
74-9-14
GCR: 74-23

NOMUF – A COMPUTER CODE FOR CALCULATING MATERIAL FLOWS IN HTGR FRPP

S. R. McNeany

Oak Ridge National Laboratory

NOTICE

This document is an internal report of the GCR Programs and contains preliminary and tentative information. It has not been given final patent clearance and the dissemination of its information is only for official use. No release to the public shall be made without the approval of the Law Department of Union Carbide Corporation Nuclear Division.

Contents

	Page
Abstract.	
Introduction.	1
Theory of NOMUF	2
Program Flowsheets.	4
FORTRAN Listing	15
How to use NOMUF.	23
Arrangement of Input Data Cards	25
Sample Process Flowsheets	26
Sample Input.	33
Sample Output	35
Appendix.	43

DESCRIPTION OF NOMUF

S. R. McNeany

INTRODUCTION

NOMUF is a computer code for making calculations of the uranium and thorium flows through the HTGR Fuel Refabrication Pilot Plant. A description of the code is given on the following pages. It is hoped that the description is complete enough to allow a user to run case studies of the FRPP or to modify the code itself. Included is a short description of the theory behind NOMUF, program flowsheets and listing, and a sample application of NOMUF to the FRPP.

The program is general enough that changes can be made in the FRPP process flowsheets without making changes in the internals of NOMUF. Process changes can be made by changing the input to NOMUF.

Theory of NOMUF

The calculations in NOMUF are based on a plant model having only forward flow of material throughout the processing steps with some fraction of the main flow being removed at various points along the line. As it presently stands, feedback of material is not included in the calculations. (See appendix.)

Consider a material processing system containing N arbitrary processes in the following configuration.

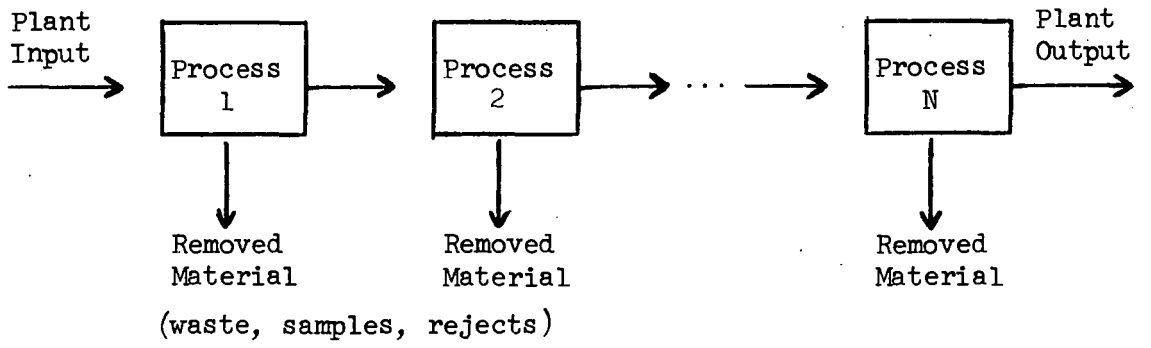

Let each process be composed of NS arbitrary process steps of the following arrangement.

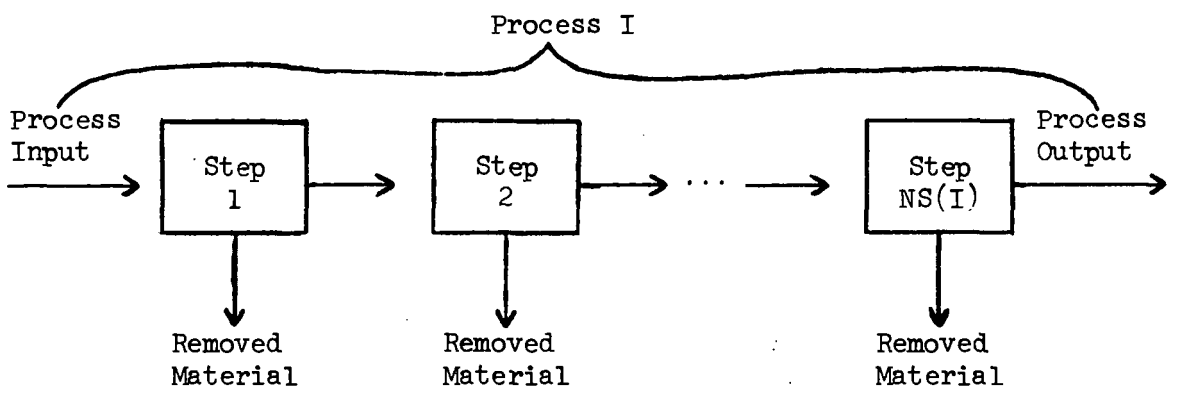

Each process step is the smallest individual component of this plant model. It might represent a transfer hopper, a sample removal station, a carbonization furnace, or any other arbitrary processing step. The only limitation on a process step is that it has a single input, a single output, and either a single removal stream or no removal stream. There is one exception to this rule. One process step at any user specified location can have one auxiliary input. These two kinds of process steps are illustrated below.

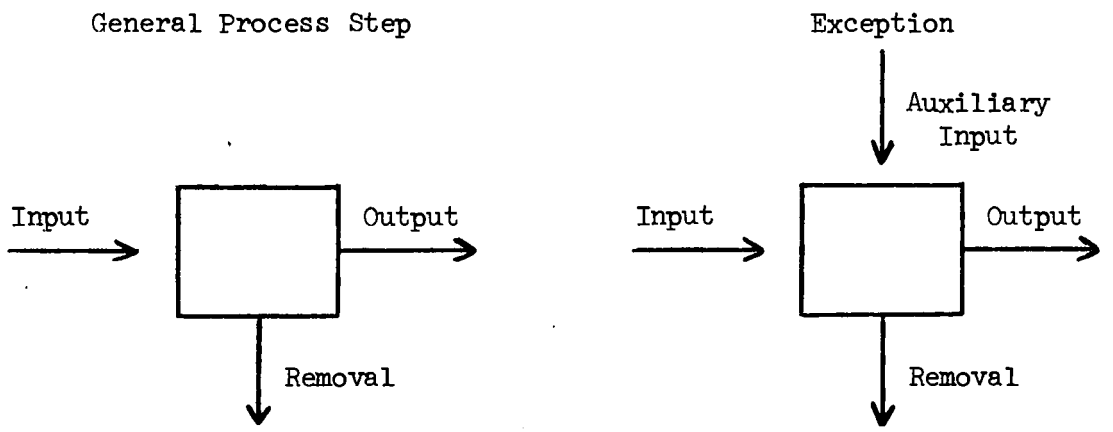

In each generalized process step, the output flow and removal flow is calculated from a user supplied removal percentage. The output flow is then redefined as the input flow to the next step. To determine the actual flows through the plant for a required plant output, preliminary calculations are made on an arbitrary plant input. The resulting output is then compared to the required output and a correction factor is computed which is applied to the preliminary plant input. Using this corrected input, the calculations are made again and the results are printed.

In the present application, two materials, uranium and thorium, are followed through the refabrication plant. Uranium enters the system in the first process step of the plant, and thorium enters in the above mentioned "Exception" process step.

Program flow sheets and a FORTRAN program listing are given on the following pages.

Program Flowsheets

MAIN PROGRAM

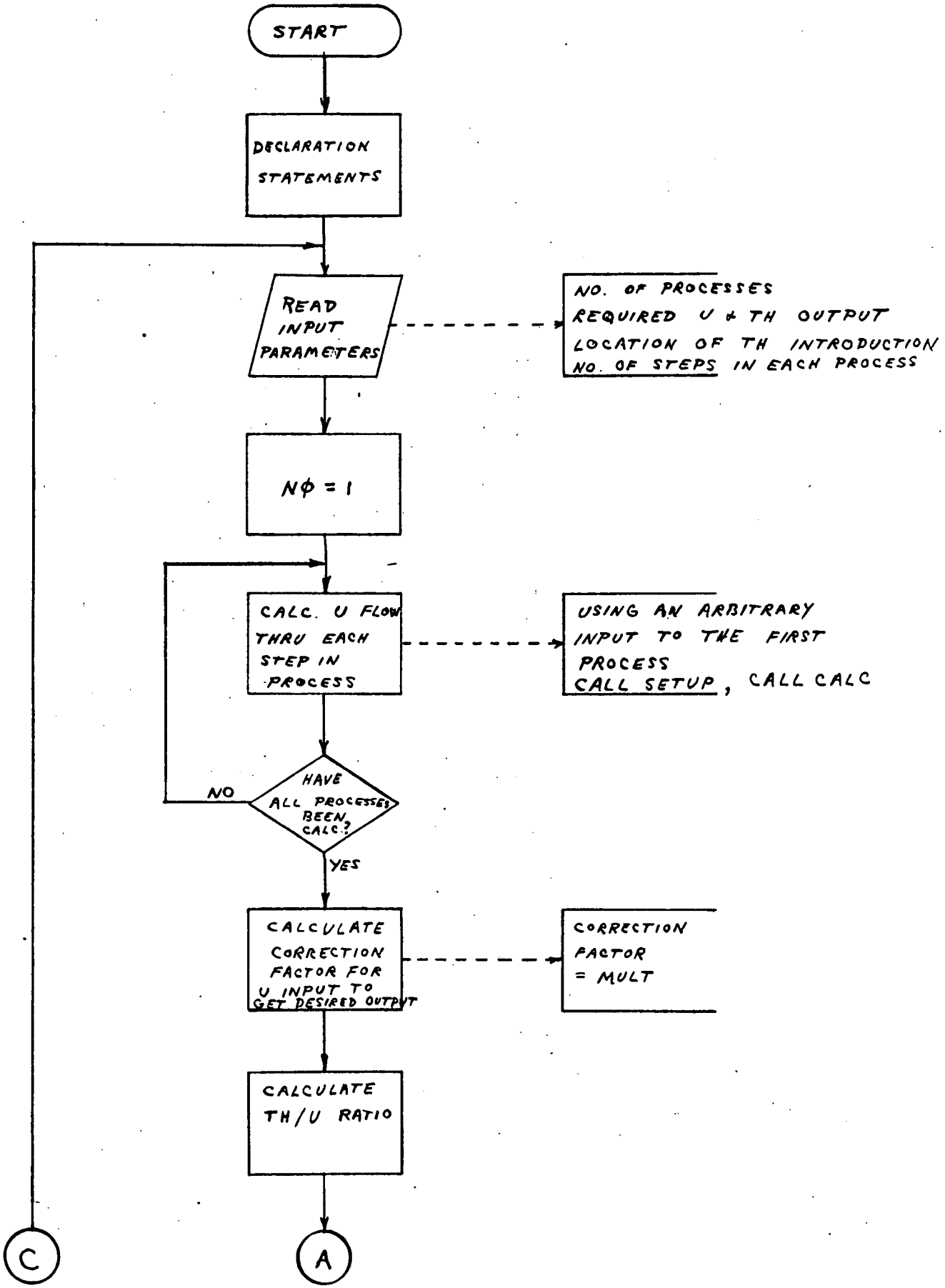

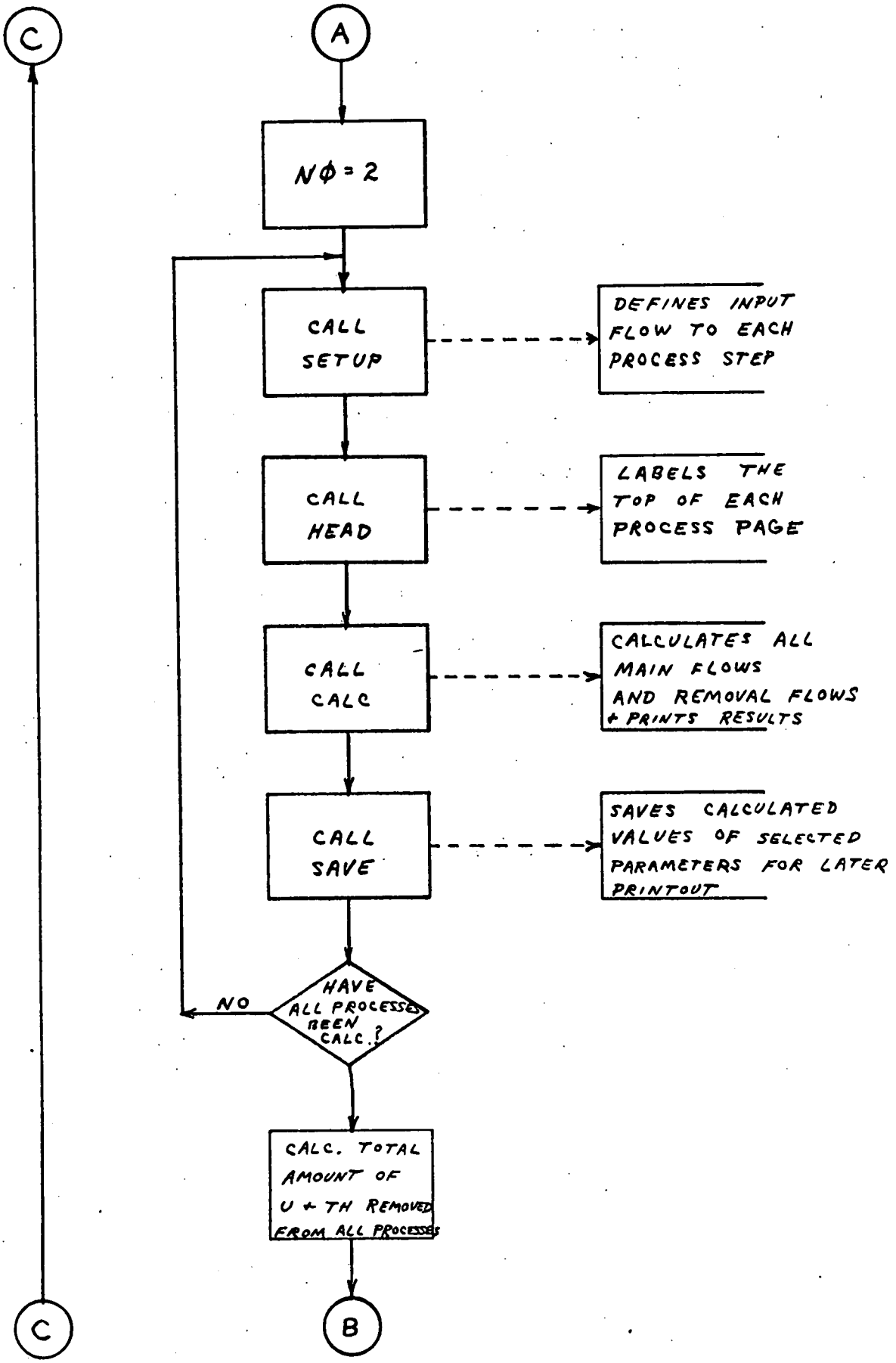
C
A
NΦ = 2
CALL SETUP
DEFINES INPUT FLOW TO EACH PROCESS STEP
CALL HEAD
LABELS THE TOP OF EACH PROCESS PAGE
CALL CALC
CALCULATES ALL MAIN FLOWS AND REMOVAL FLOWS + PRINTS RESULTS
CALL SAVE
SAVES CALCULATED VALUES OF SELECTED PARAMETERS FOR LATER PRINTOUT
HAVE ALL PROCESSES BEEN CALC.?
NO
CALC. TOTAL AMOUNT OF U + TH REMOVED FROM ALL PROCESSES
C
B

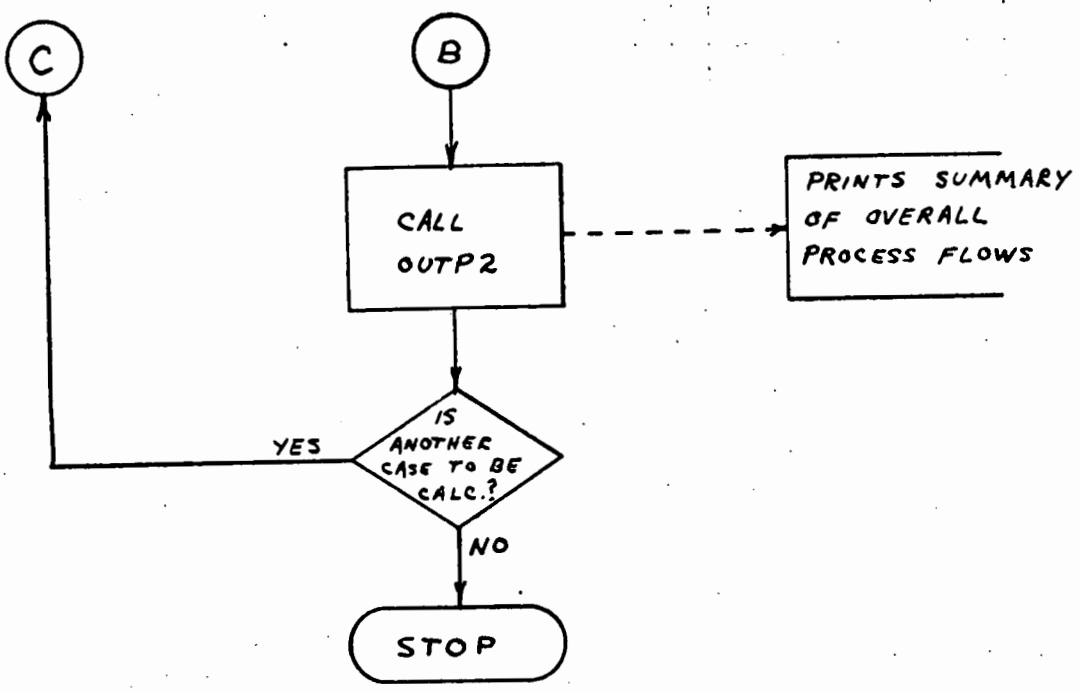
C
B
CALL
OUTP2
PRINTS SUMMARY
OF OVERALL
PROCESS FLOWS
IS
ANOTHER
CASE TO BE
CALC.?
YES
NO
STOP

SUBROUTINE SETUP

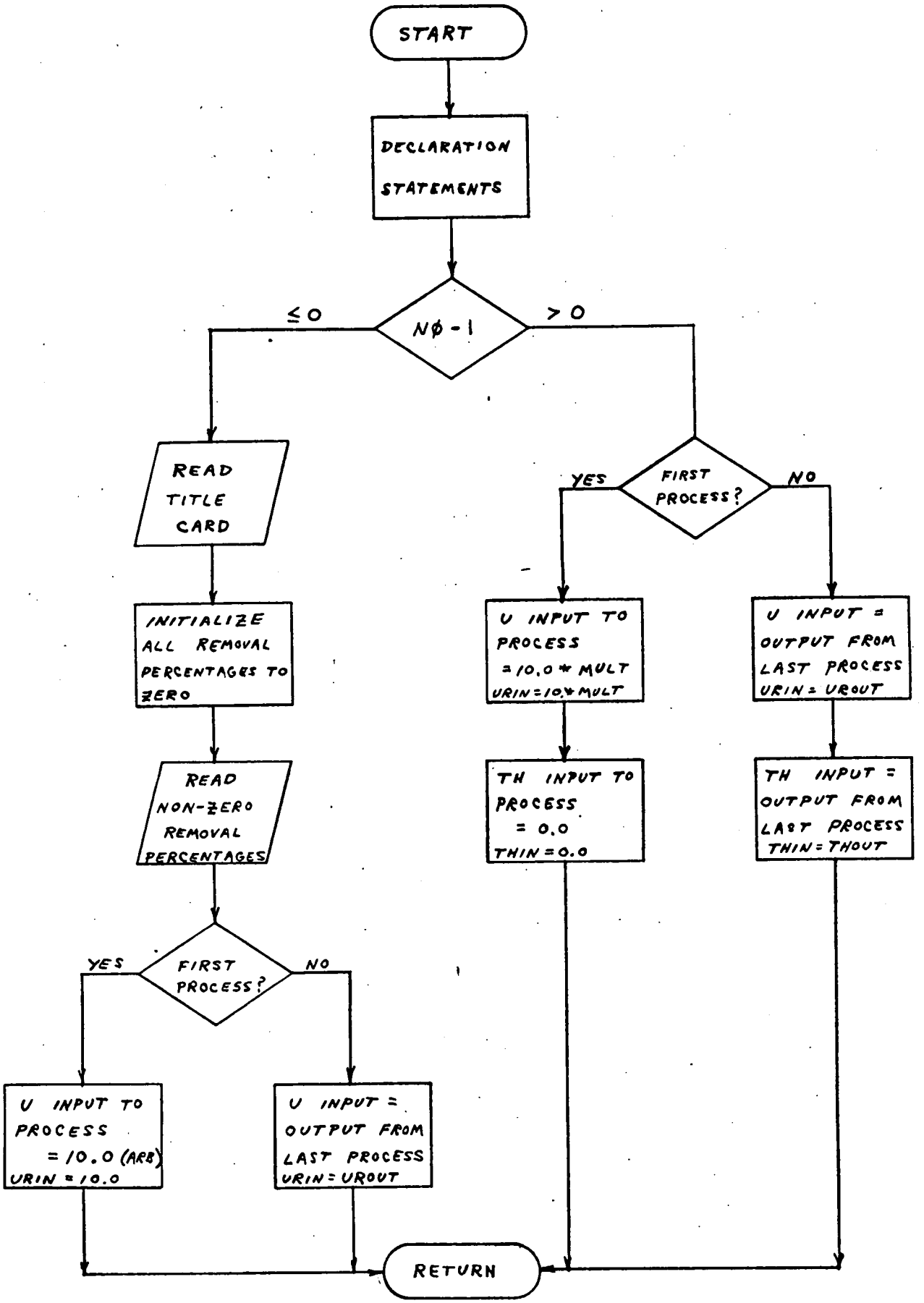

SUBROUTINE HEAD

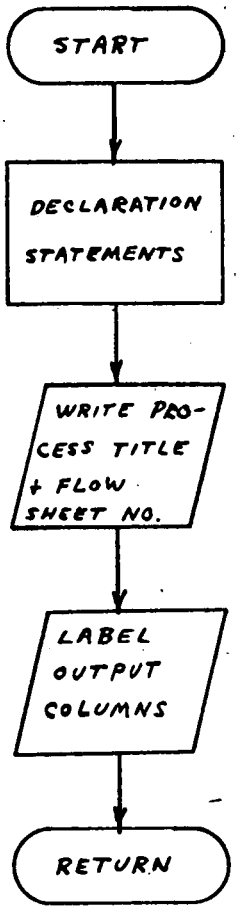

SUBROUTINE CALC

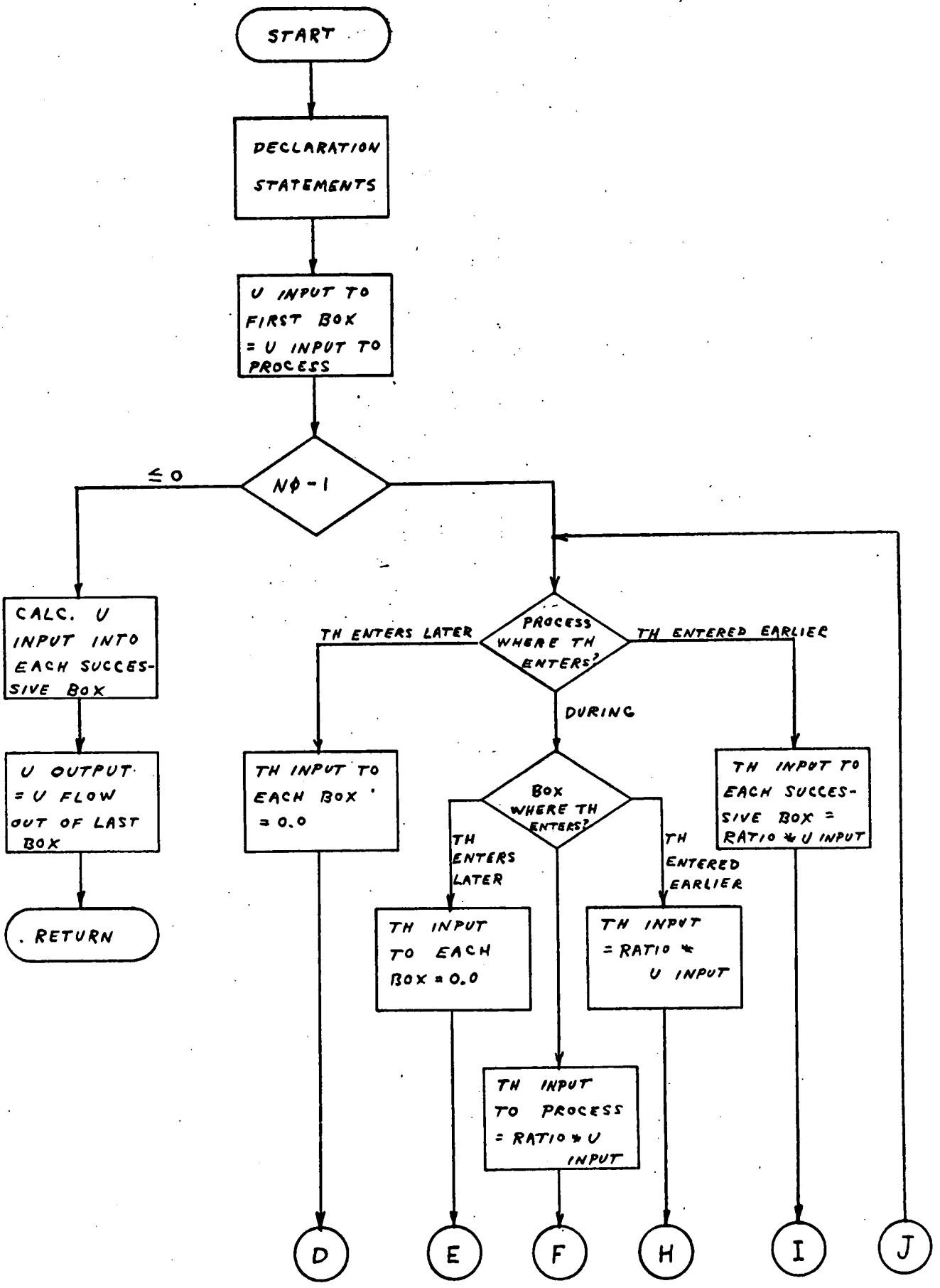

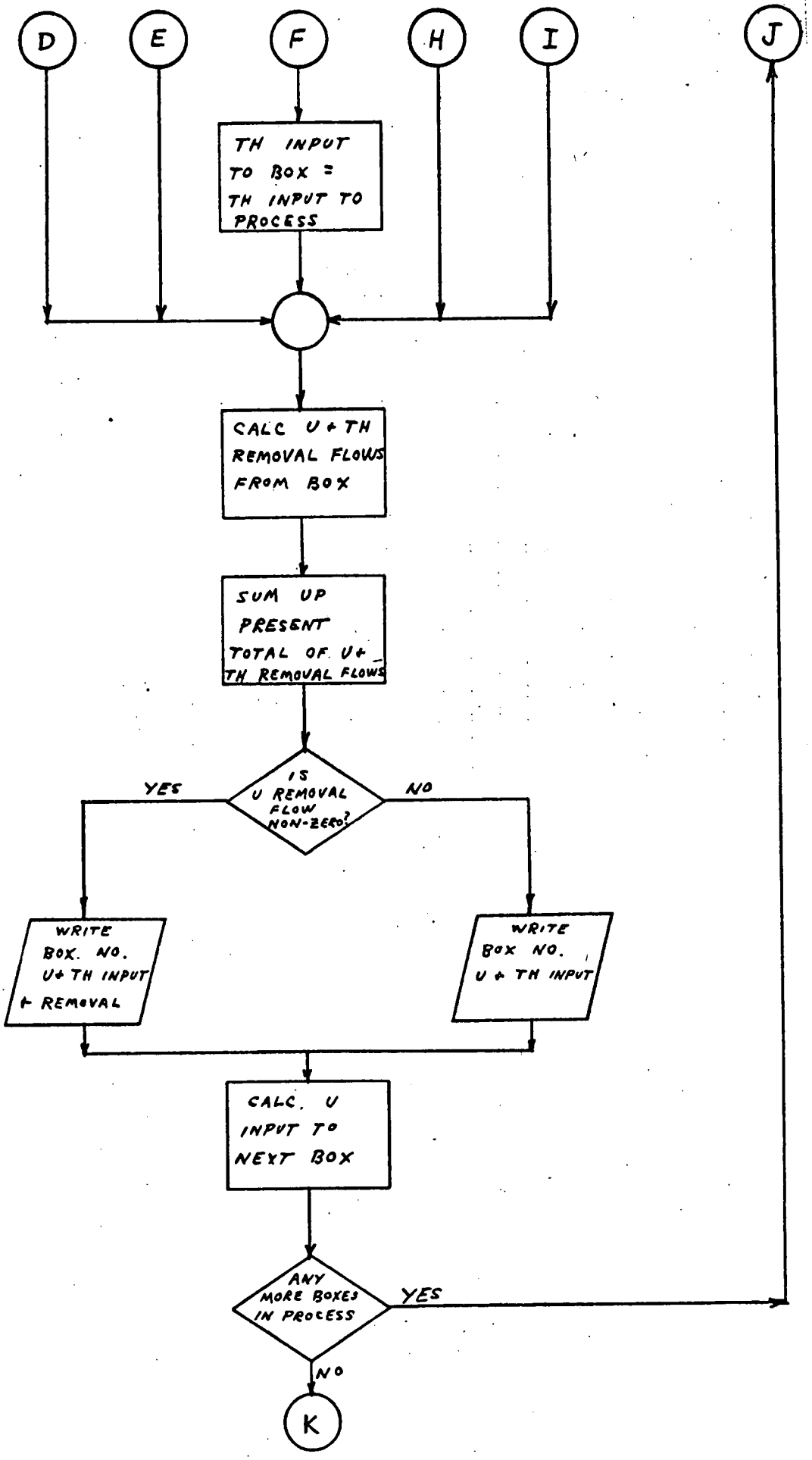
D
E
F
H
I
J
TH INPUT TO BOX = TH INPUT TO PROCESS
CALC U + TH REMOVAL FLOWS FROM BOX
SUM UP PRESENT TOTAL OF U + TH REMOVAL FLOWS
IS U REMOVAL FLOW NON-ZERO?
YES
NO
WRITE BOX. NO. U+ TH INPUT + REMOVAL
WRITE BOX NO. U + TH INPUT
CALC. U INPUT TO NEXT BOX
ANY MORE BOXES IN PROCESS
YES
NO
K

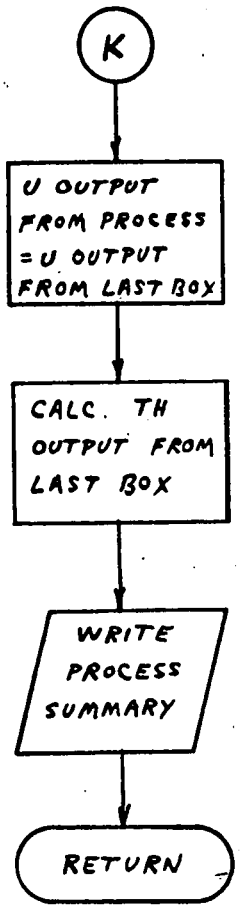
K
U OUTPUT FROM PROCESS = U OUTPUT FROM LAST BOX
CALC. TH OUTPUT FROM LAST BOX
WRITE PROCESS SUMMARY
RETURN

SUBROUTINE SAVE

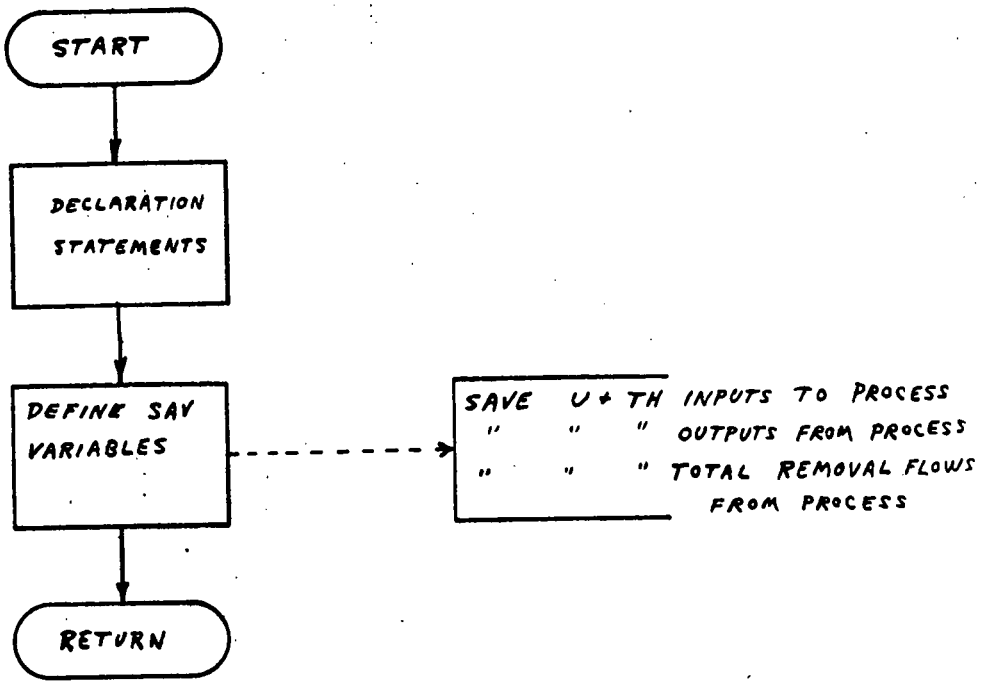

SUBROUTINE OUTP2

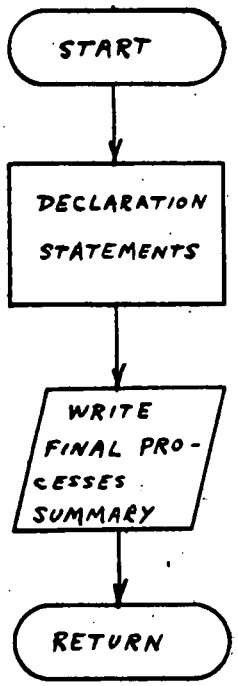

FORTRAN Listing

```
C       STATIC MODEL - MATERIAL BALANCE OF HTGR REFABRICATION PILOT PLANT
C
C       THIS PROGRAM CALCULATES THE MAIN FLOWS AND REMOVAL FLOWS (REJECT,
C       WASTE AND SAMPLES) OF URANIUM AND THORIUM THROUGH THE STEPS INVOLVED
C       IN THE REFABRICATION OF HTGR FUEL ELEMENTS.
C
C       THE PROGRAM IS DESIGNED TO HANDLE UP TO AND INCLUDING 10 PROCESSES.
C       EACH PROCESS CAN HAVE UP TO 100 PROCESSING STEPS WITHIN IT.
C
C       THE REQUIRED INPUT IS AS FOLLOWS:
C          N=NO. OF PROCESSES INVOLVED (I2)
C          RUR=REQUIRED OUTPUT RATE OF URANIUM IN KG. PER DAY (E12.3)
C          RTH=REQUIRED OUTPUT RATE OF THORIUM IN KG. PER DAY (E12.3)
C          NOP=NO. OF PROCESS IN WHICH THORIUM ENTERS (I2)
C          NOS=NO. OF PROCESSING STEP WITHIN PROCESS NO. NOP IN WHICH THORIUM
C          ENTERS (I2)
C          LC=0 IF THIS IS THE LAST CASE ,LC=NON-ZERO IF THIS IS NOT THE
C          LAST CASE STUDY (I1)
C          NS(IP)=NO. OF PROCESSING STEPS WITHIN PROCESS NO. IP (I3)
C          TITLE(IP,I)=TITLE OF PROCESS NO. IP (6A4)
C          NF(IP)=NO. OF FLOW CHART CORRESPONDING TO PROCESS NO. IP (I2)
C          I1=STEP NO. IN FIRST PROCESS CONTAINING A NON-ZERO REMOVAL
C             PERCENTAGE (I3)
C          D1=CORRESPONDING REMOVAL PERCENTAGE (E13.4)
C
      REAL*4 MULT
      INTEGER TITLE(10,6)
      DIMENSION NS(10),SAV(60),NF(10),X(10,100)
      COMMON N,LC,NS,NO,IP,NSA,MULT,TITLE,NF,SAV,I1,I2,I3,I4,I5,D1,D2,
     1D3,D4,D5,X,NSAP1,RUR,RTH,NOP,NOS,UROUT,RATIO,TURR,TTRR,URIN,THIN,
     2THOUT,SUMU,SUMT,URMF,URRF,THMF,THRF
C     READ INPUT PARAMETERS
    1 READ(5,101)N,RUR,RTH,NOP,NOS,LC
      READ(5,102)(NS(I),I=1,N)
C     NO IS A FLAG WHICH INDICATES WEATHER THE FOLLOWING CALCULATIONS
C     ARE PRELIMINARY OR FINAL, NO=1 INDICATES PRELIMINARY CALCULATIONS
      NO=1
C     CALCULATING URANIUM FLOW THROUGH ALL PROCESSES
      DO 100 IPA=1,N
      IP=IPA
      NSA=NS(IP)
      NSAP1=NSA+1
      CALL SETUP
  100 CALL CALC
C     CALCULATING CORRECTION FACTOR FOR U INPUT TO GET DESIRED OUTPUT
      MULT=RUR/UROUT
C     CALCULATING TH/U RATIO
      RATIO=RTH/RUR
C     FINAL CALCULATIONS OF URANIUM AND THORIUM FLOWS
      NO=2
      DO 200 IPA=1,N
      IP=IPA
      NSA=NS(IP)
      NSAP1=NSA+1
      CALL SETUP
      CALL HEAD
```

```
      CALL CALC
  200 CALL SAVE
C     CALCULATING TOTAL AMOUNTS OF URANIUM AND THORIUM REMOVED
      TURR=0.0
      TTRR=0.0
      DO 210 I=1,N
      TURR=TURR+SAV(6*I-1)
  210 TTRR=TTRR+SAV(6*I)
C     PRINTING FINAL SUMMARY
      CALL OUTP2
C     IS ANOTHER CASE TO BE CALCULATED ?
      IF(LC)300,300,1
  101 FORMAT(I2,7X,E12.3,3X,E12.3,3X,I2,3X,I2,3X,I1)
  102 FORMAT(10I3)
  300 STOP
      END
```

X69 X69

```
      SUBROUTINE SETUP
C     THIS SUBROUTINE READS ADDITIONAL INPUT PARAMETERS AND INITIALIZES
C     OTHER PARAMETERS FOR USE IN LATER SUBROUTINES
C
      REAL*4 MULT
      INTEGER TITLE(10,6)
      DIMENSION NS(10),SAV(60),NF(10),X(10,100)
      COMMON N,LC,NS,NO,IP,NSA,MULT,TITLE,NF,SAV,I1,I2,I3,I4,I5,D1,D2,
     1D3,D4,D5,X,NSAP1,RUR,RTH,NOP,NOS,UROUT,RATIO,TURR,TTRR,URIN,THIN,
     2THOUT,SUMU,SUMT,URMF,URRF,THMF,THRF
C     PRELIMINARY CALCULATIONS ?
      IF(NO-1)15,15,30
C     READ TITLE CARD
   15 READ(5,200)(TITLE(IP,I),I=1,6),NF(IP)
C     INITIALIZE ALL REMOVAL PERCENTAGES TO ZERO
      DO 16 I=1,NSAP1
   16 X(IP,I)=0.0
C     READ NON-ZERO REMOVAL PERCENTAGES
      DO 22 I=1,100
      READ(5,201)I1,D1,I2,D2,I3,D3,I4,D4,I5,D5
      IF(I1)23,23,21
   21 X(IP,I1)=D1
      X(IP,I2)=D2
      X(IP,I3)=D3
      X(IP,I4)=D4
   22 X(IP,I5)=D5
C     FIRST PROCESS ?
   23 IF(IP-1)25,25,27
   25 URIN=10.0
      GO TO 40
   27 URIN=UROUT
      GO TO 40
C     FIRST PROCESS ?
   30 IF(IP-1)32,32,34
   32 URIN=MULT*10.0
      THIN=0.0
      GO TO 40
   34 URIN=UROUT
      THIN=THOUT
  200 FORMAT(6A4,1X,I2)
  201 FORMAT(5(I3,E13.4))
   40 RETURN
      END
```

X69

```
      SUBROUTINE HEAD
C     THIS SUBROUTINE PRINTS OUT A HEADING AND LABELS THE OUTPUT COLUMNS
C     FOR EACH PROCESS
C
      REAL*4 MULT
      INTEGER TITLE(10,6)
      DIMENSION NS(10),SAV(60),NF(10),X(10,100)
      COMMON N,LC,NS,NO,IP,NSA,MULT,TITLE,NF,SAV,I1,I2,I3,I4,I5,D1,D2,
     1D3,D4,D5,X,NSAP1,RUR,RTH,NOP,NOS,UROUT,RATIO,TURR,TTRR,URIN,THIN,
     2THOUT,SUMU,SUMT,URMF,URRF,THMF,THRF
      WRITE(6,700)(TITLE(IP,I),I=1,6)
      WRITE(6,701) NF(IP)
      WRITE(6,702)
      WRITE(6,703)
      WRITE(6,705)
  700 FORMAT('1',52X,6A4)
  701 FORMAT(53X,'(SEE FLOW SHEET NO.',I2,')')
  702 FORMAT('0',12X,'STEP NO.',21X,'INPUT FLOW',16X,'REMOVAL FLOW (IF N
     1ON-ZERO)',10X,'PERCENT REMOVED')
  703 FORMAT(34X,'(KG. HEAVY METAL PER DAY)',10X,'(KG. HEAVY METAL PER D
     1AY)')
  705 FORMAT(34X,'URANIUM',11X,'THORIUM',10X,'URANIUM',11X,'THORIUM')
      RETURN
      END
```

X59

X59

```
      SUBROUTINE CALC
C     THIS SUBROUTINE CALCULATES THE MAIN FLOWS AND REMOVAL FLOWS THROUGH
C     EACH STEP OF A PROCESS AND PRINTS THE RESULT
C
      REAL*4 MULT
      INTEGER TITLE(10,6)
      DIMENSION NS(10),SAV(60),NF(10),X(10,100)
      COMMON N,LC,NS,NO,IP,NSA,MULT,TITLE,NF,SAV,I1,I2,I3,I4,I5,D1,D2,
     1D3,D4,D5,X,NSAP1,RUR,RTH,NOP,NOS,UROUT,RATIO,TURR,TTRR,URIN,THIN,
     2THOUT,SUMU,SUMT,URMF,URRF,THMF,THRF
C     DEFINE U INPUT TO FIRST PROCESS BOX (STEP)
      URMF=URIN
C     PRELIMINARY CALCULATIONS ?
      IF(NO-1)1,1,3
C     CALCULATE REST OF U INPUT FLOWS
    1 DO 2 I=1,NSA
    2 URMF=URMF*(1.0-X(IP,I)/100.0)
      UROUT=URMF
      RETURN
    3 SUMU=0.0
      SUMT=0.0
C     CALCULATE U AND TH INPUT, U AND TH REMOVAL FLOWS, AND PRINT THE RESULTS
      DO 20 I=1,NSA
C     PROCESS WHERE TH ENTERS ?
      IF(IP-NOP)5,7,6
    5 THMF=0.0
      GO TO 11
    6 THMF=RATIO*URMF
      GO TO 11
C     BOX WHERE TH ENTERS ?
    7 IF(I-NOS)8,9,10
    8 THMF=0.0
      GO TO 11
    9 THIN=RATIO*URMF
      THMF=THIN
      GO TO 11
   10 THMF=RATIO*URMF
   11 URRF=URMF*X(IP,I)/100.0
      THRF=THMF*X(IP,I)/100.0
C     CALCULATING SUMS OF REMOVAL FLOWS
      SUMU=SUMU+URRF
      SUMT=SUMT+THRF
C     U REMOVAL FLOW NON-ZERO ?
      IF(URRF.NE.0.0)GO TO 12
      WRITE(6,300)I,URMF,THMF
      GO TO 20
   12 WRITE(6,300)I,URMF,THMF,URRF,THRF,X(IP,I)
   20 URMF=URMF*(1.0-X(IP,I)/100.0)
      UROUT=URMF
      THOUT=THMF*(1.0-X(IP,NSA)/100.0)
      WRITE(6,301)URIN,UROUT,SUMU
      WRITE(6,302)THIN,THOUT,SUMT
  300 FORMAT('0',13X,I3,16X,F8.3,10X,F8.3,9X,F8.4,10X,F8.4,11X,F9.3)
  301 FORMAT('0',58X,'PROCESS SUMMARY'//7X,'URANIUM INPUT =',F8.3,' KGHM
     1/DAY',8X,'URANIUM OUTPUT =',F8.3,' KGHM/DAY',11X,'TOTAL URANIUM RE
     2MOVED =',F8.3,' KGHM/DAY')
  302 FORMAT('0',6X,'THORIUM INPUT =',F8.3,' KGHM/DAY',8X,'THORIUM OUTPU
     1T =',F8.3,' KGHM/DAY',11X,'TOTAL THORIUM REMOVED =',F8.3,' KGHM/DA
     2Y')
      RETURN
      END
```

X59

X60

```
      SUBROUTINE SAVE
C     THIS SUBROUTINE STORES THE PRIMARY VARIABLES FROM EACH PROCESS FOR
C     LATER PRINTOUT IN A SUMMARY TABLE
C
      REAL*4 MULT
      INTEGER TITLE(10,6)
      DIMENSION NS(10),SAV(60),NF(10),X(10,100)
      COMMON N,LC,NS,NO,IP,NSA,MULT,TITLE,NF,SAV,I1,I2,I3,I4,I5,D1,D2,
     1D3,D4,D5,X,NSAP1,RUR,RTH,NOP,NOS,UROUT,RATIO,TURR,TTRR,URIN,THIN,
     2THOUT,SUMU,SUMT,URMF,URRF,THMF,THRF
      SAV(6*IP-5)=URIN
      SAV(6*IP-4)=THIN
      SAV(6*IP-3)=UROUT
      SAV(6*IP-2)=THOUT
      SAV(6*IP-1)=SUMU
      SAV(6*IP)=SUMT
      RETURN
      END
```

```
      SUBROUTINE OUTP2
C     THIS SUBROUTINE PRINTS OUT THE FINAL SUMMARY TABLE
C
      REAL*4 MULT
      INTEGER TITLE(10,6)
      DIMENSION NS(10),SAV(60),NF(10),X(10,100)
      COMMON N,LC,NS,NO,IP,NSA,MULT,TITLE,NF,SAV,I1,I2,I3,I4,I5,D1,D2,
     1D3,D4,D5,X,NSAP1,RUR,RTH,NOP,NOS,UROUT,RATIO,TURR,TTRR,URIN,THIN,
     2THOUT,SUMU,SUMT,URMF,URRF,THMF,THRF
      WRITE(6,800)
      DO 10 I=1,N
   10 WRITE(6,801)I,(TITLE(I,J),J=1,6),SAV(6*I-5),SAV(6*I-4),SAV(6*I-3),
     2SAV(6*I-2),SAV(6*I-1),SAV(6*I)
      WRITE(6,802)TURR,TTRR
  800 FORMAT('1',54X,'SUMMARY OF PROCESS FLOWS'//21X,'PROCESS NAME',16X,
     1'INPUT',19X,'OUTPUT',16X,'TOTAL REMOVED'/46X,'(KGHM/DAY)',15X,
     2'(KGHM/DAY)',15X,'(KGHM/DAY)'/39X,3(3X,'URANIUM',5X,'THORIUM',3X))
  801 FORMAT('0',10X,I2,2X,6A4,3(2X,F8.3,4X,F8.3,3X))
  802 FORMAT('0',9X,'TOTAL AMOUNT OF URANIUN REMOVED FROM ALL PROCESSES
     1=',F8.3//9X,'TOTAL AMOUNT OF THORIUM REMOVED FROM ALL PROCESSES ='
     2,F8.3)
      RETURN
      END
```

X59

X59

How to Use NOMUF

In order to use NOMUF, the user must acquire a set of process flowsheets similar to those presented in the following example. The process steps must conform to the generalized limitations given above. In addition, there must be no more than 10 processes and no more than 100 process steps within any given process.

The required input information, along with its card number and input format, is as follows.

Card 1

Cols. 1–2, N = number of processes (I2)
Cols. 10–21, RUR = required uranium output in kg/day (E12.3)
Cols. 25–36, RTH = required thorium output in kg/day (E12.3)
Cols. 40–41, NOP = number of process in which thorium enters (I2)
Cols. 45–46, NOS = number of step in which thorium enters (I2)
Col. 50, LC = zero for last case study, non-zero otherwise (I1)

Card 2

Cols. 1–3, NS(1) = number of steps in first process (I3)
Cols. 4–6, NS(2) = number of steps in second process (I3)
Cols. 7–9, NS(3) = number of steps in third process (I3)
Cols. 10–12, NS(4) = number of steps in fourth process (I3)
Cols. 13–15, NS(5) = number of steps in fifth process (I3)
Cols. 16–18, NS(6) = number of steps in sixth process (I3)
Cols. 19–21, NS(7) = number of steps in seventh process (I3)
Cols. 22–24, NS(8) = number of steps in eighth process (I3)
Cols. 25–27, NS(9) = number of steps in ninth process (I3)
Cols. 28–30, NS(10) = number of steps in tenth process (I3)

Card 3

Cols. 1–24 TITLE(1,I) = title of first process (6A4)
Cols. 26–27 NF(1) = flowsheet number corresponding to first process (I2)

Card 4

Cols. 1–3, I1 = step number in first process containing a non-zero removal fraction (I3)
Cols. 4–16, D1 = corresponding removal percentage (E13.4)
Cols. 17–19, I2 = step number in first process containing a non-zero removal fraction (I3)
Cols. 20–32, D2 = corresponding removal percentage (E13.4)
Fill rest of card 4 similarly.

Repeat Card 4 until all non-zero removal percentages of the first process are included.

Place a blank card after last card of removal percentages of first process.

Repeat Cards 3 and 4 (including blank) for each process.

Repeat all of the above for each case study.

The final arrangement of the input cards is contained in the diagram on the following page.

ARRANGEMENT OF INPUT DATA CARDS

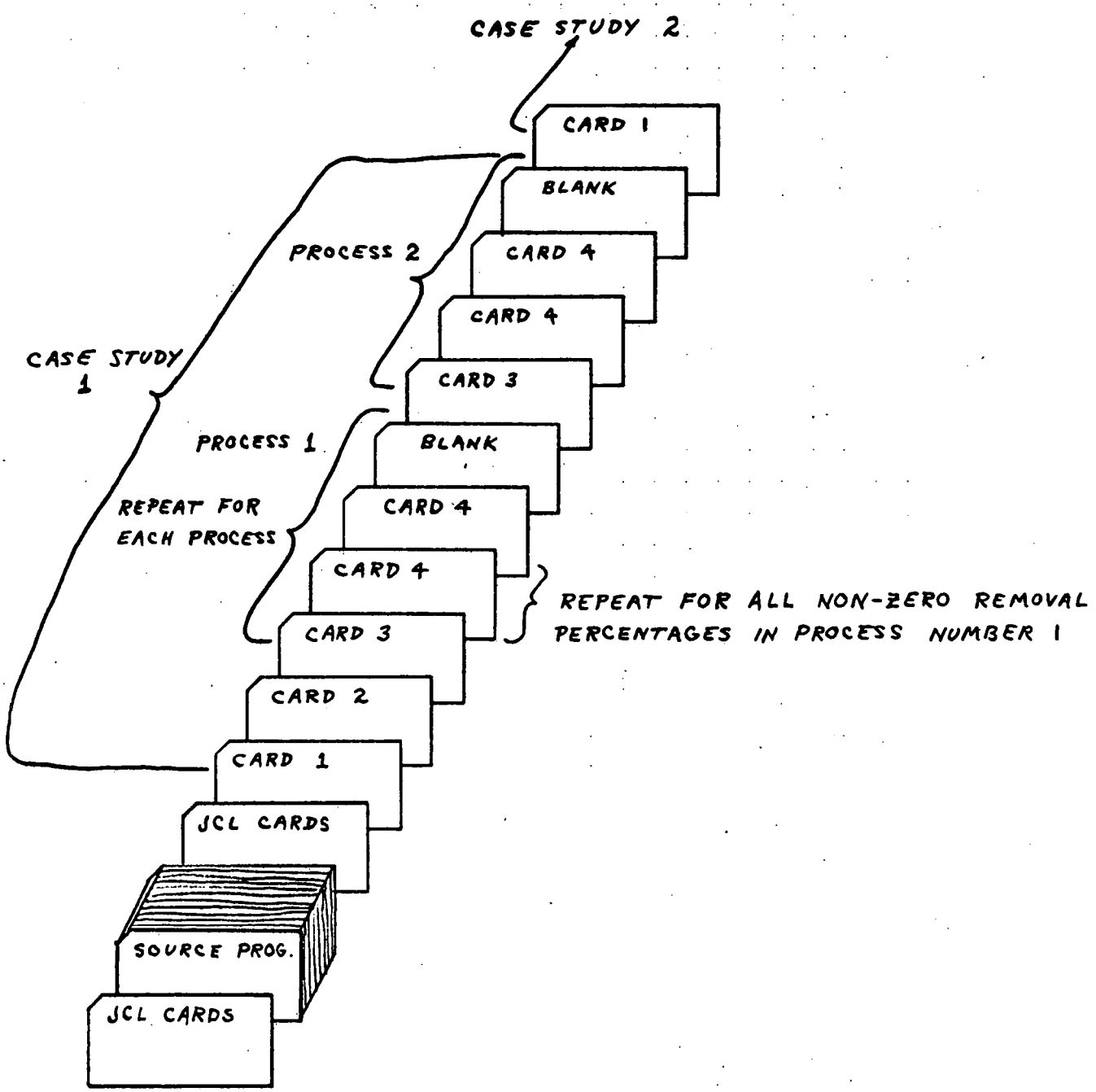

Sample Process Flowsheets

FLOW SHEET NO. 1

MATERIAL RECEIVING

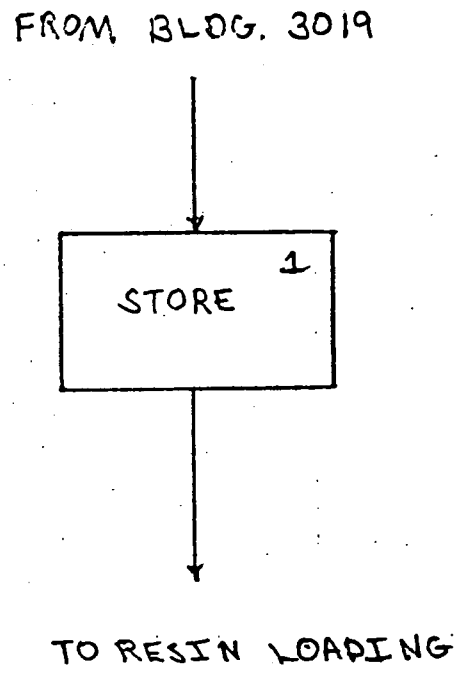

FLOW SHEET NO. 2

RESIN LOADING (RL)

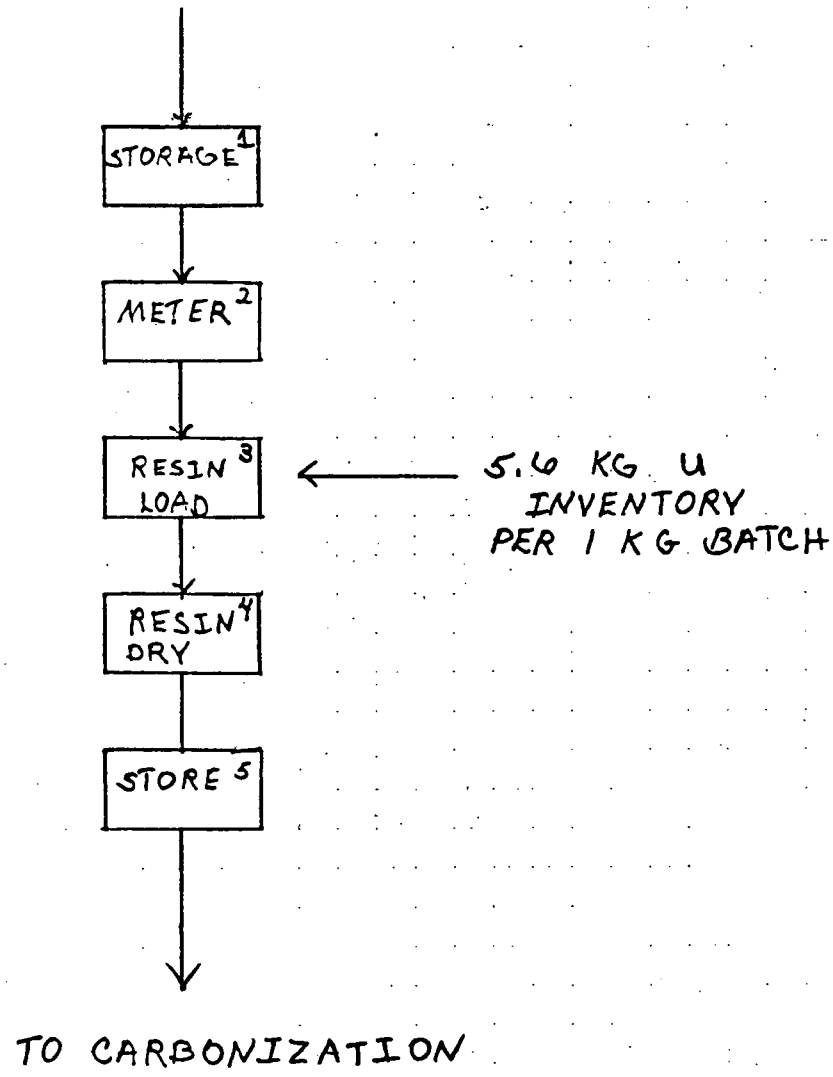

FLOW SHEET NO. 3

CARBONIZATION (CB)

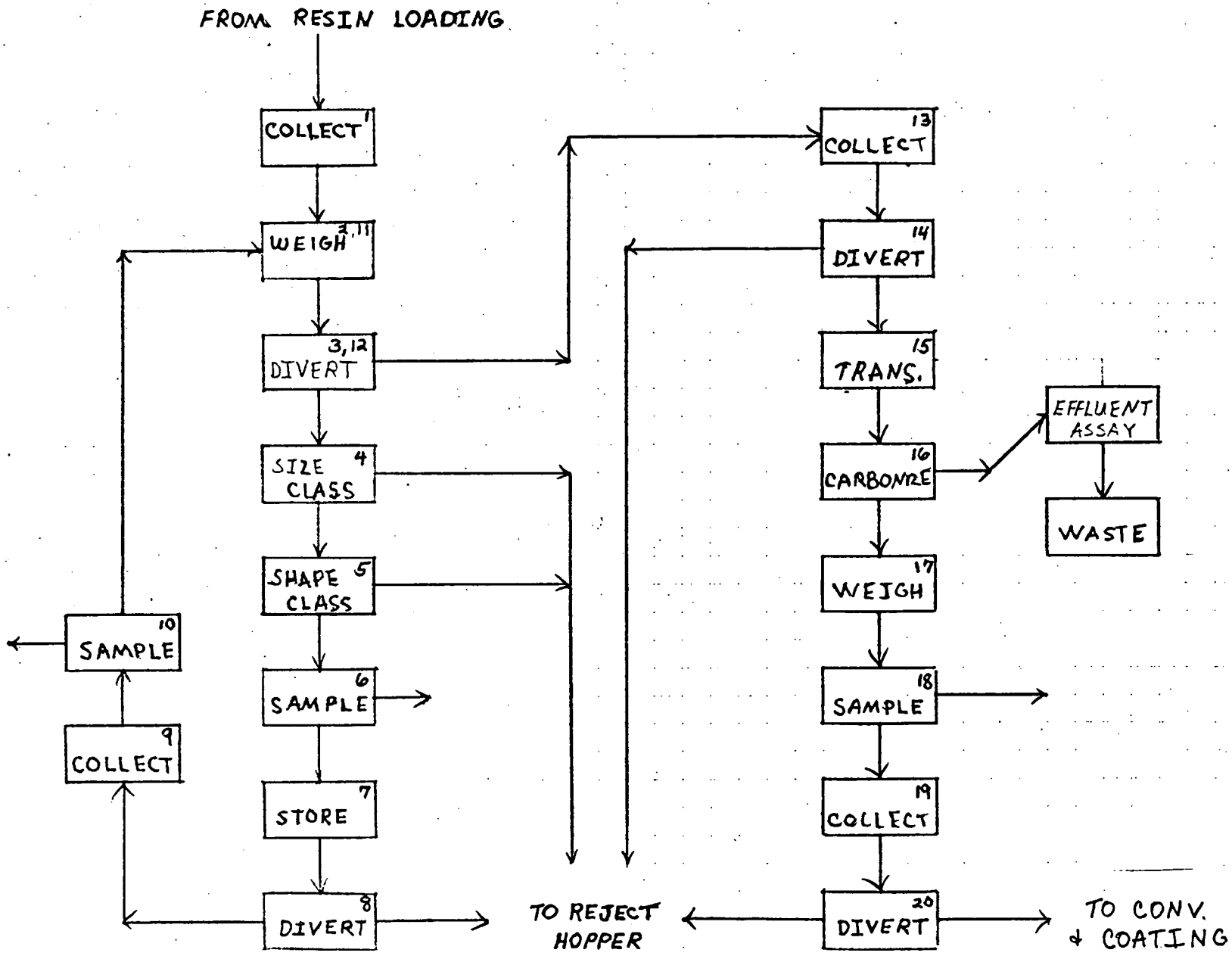

FLOW SHEET NO. 4

CONVERSION & COATING (cc)

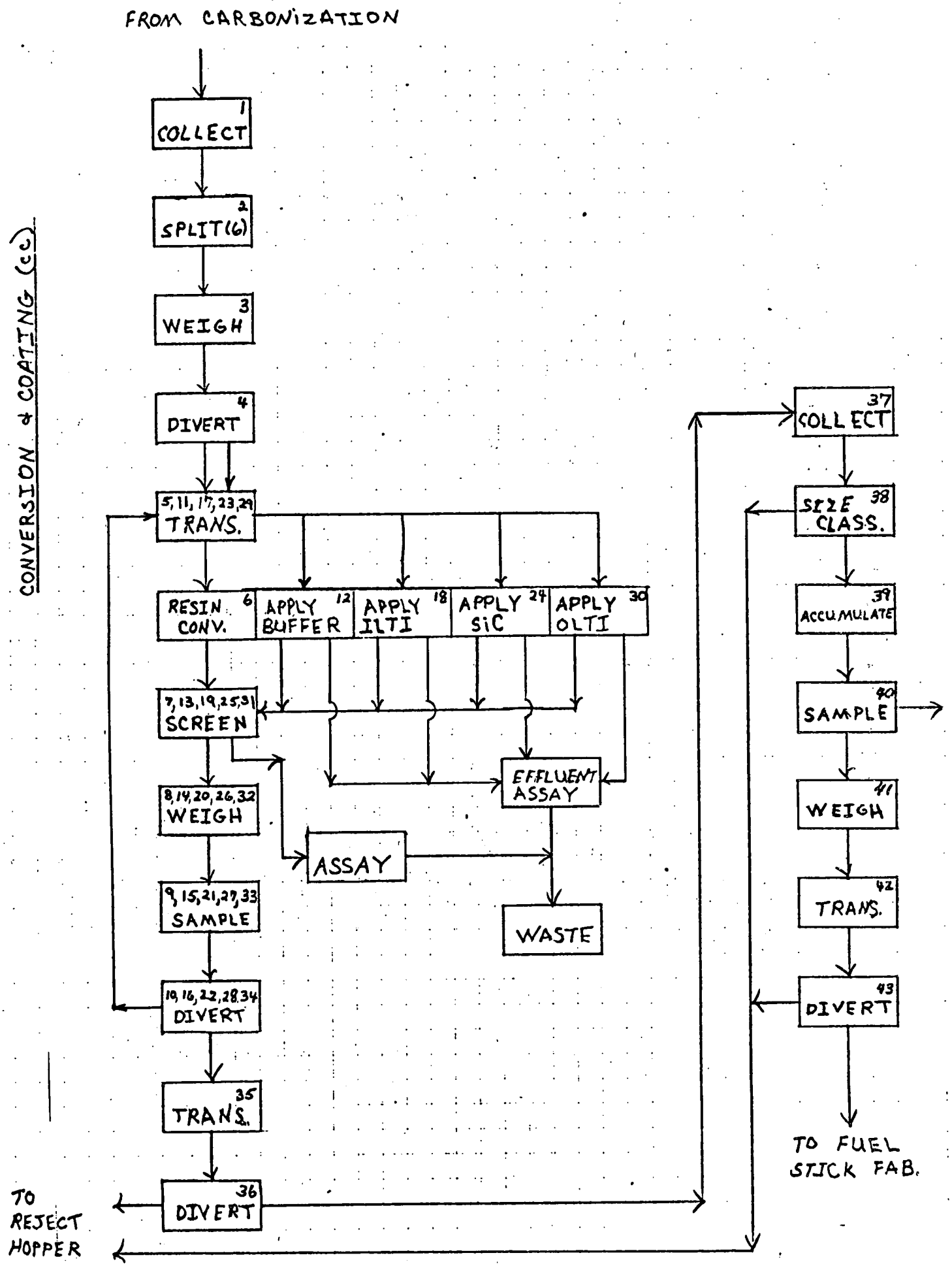

FLOW SHEET NO. 5

FUEL STICK FABRICATION (FS)

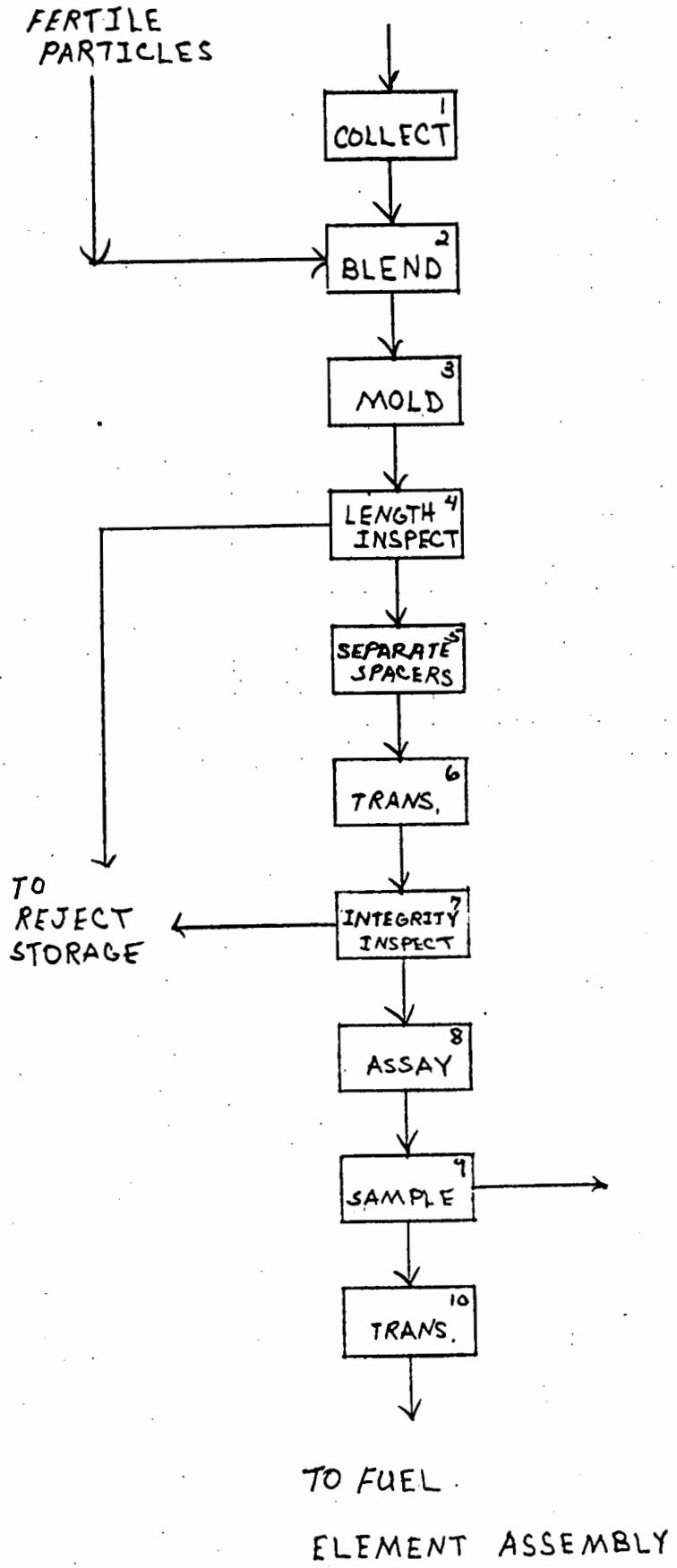

FLOW SHEET NO. 6

FUEL ELEMENT ASSEMBLY (EA)

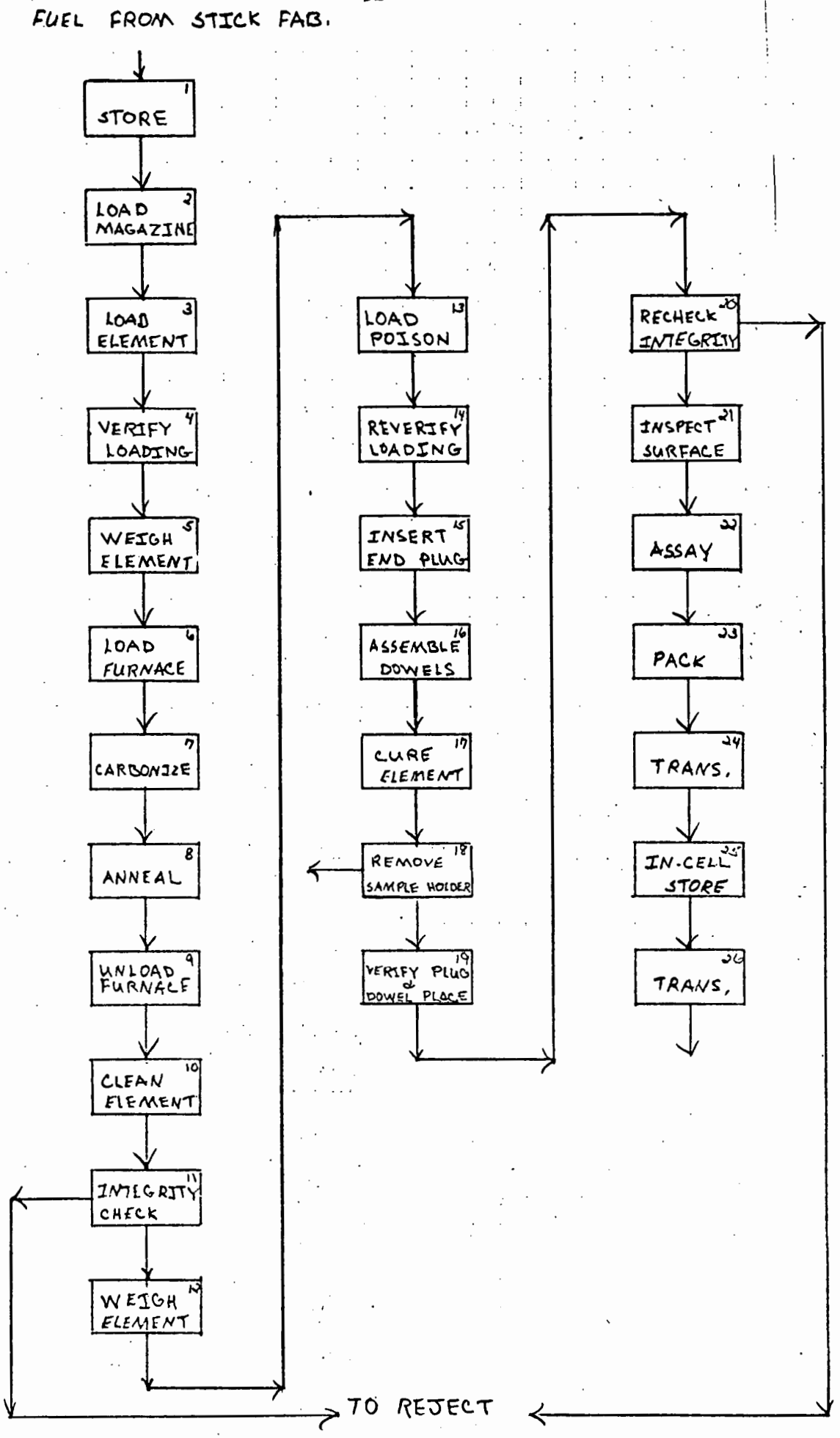

Sample Input

```
 6          1.75              23.25          5    2    0
  1  5 20 43 10 26
MATERIAL RECEIVING          1

RESIN LOADING               2
  3 0.04

CARBONIZATION               3
  4 1.0          5 1.0          6 0.016        8 5.0          10 0.016
 14 2.5         16 3.0         18 0.0233      20 5.0

CONVERSION AND COATING      4
  7 0.1         13 0.1         19 0.1         25 0.1          31 0.1
  9 0.1         15 0.1         21 0.1         27 0.1          33 0.1
 12 0.1         18 0.1         24 0.1         30 0.1          36 5.0
 38 3.0         40 0.071667    43 5.0

FUEL STICK FABRICATION      5
  4 0.3          7 0.2          9 0.1

FUEL ELEMENT ASSEMBLY       6
 11 0.25        18 0.033333    20 0.25
```

Sample Output

MATERIAL RECEIVING
(SEE FLOW SHEET NO. 1)

STEP NO.	INPUT FLOW (KG. HEAVY METAL PER DAY) URANIUM	INPUT FLOW (KG. HEAVY METAL PER DAY) THORIUM	REMOVAL FLOW (IF NON-ZERO) (KG. HEAVY METAL PER DAY) URANIUM	REMOVAL FLOW (IF NON-ZERO) (KG. HEAVY METAL PER DAY) THORIUM	PERCENT REMOVED
1	2.455	0.0			

PROCESS SUMMARY

URANIUM INPUT = 2.455 KGHM/DAY URANIUM OUTPUT = 2.455 KGHM/DAY TOTAL URANIUM REMOVED = 0.0 KGHM/DAY

THORIUM INPUT = 0.0 KGHM/DAY THORIUM OUTPUT = 0.0 KGHM/DAY TOTAL THORIUM REMOVED = 0.0 KGHM/DAY

RESIN LOADING
(SEE FLOW SHEET NO. 2)

STEP NO.	INPUT FLOW (KG. HEAVY METAL PER DAY)		REMOVAL FLOW (IF NON-ZERO) (KG. HEAVY METAL PER DAY)		PERCENT REMOVED
	URANIUM	THORIUM	URANIUM	THORIUM	
1	2.455	0.0			
2	2.455	0.0			
3	2.455	0.0	0.0010	0.0	0.040
4	2.454	0.0			
5	2.454	0.0			

PROCESS SUMMARY

URANIUM INPUT = 2.455 KGHM/DAY URANIUM OUTPUT = 2.454 KGHM/DAY TOTAL URANIUM REMOVED = 0.001 KGHM/DAY

THORIUM INPUT = 0.0 KGHM/DAY THORIUM OUTPUT = 0.0 KGHM/DAY TOTAL THORIUM REMOVED = 0.0 KGHM/DAY

CARBONIZATION
(SEE FLOW SHEET NO. 3)

STEP NO.	INPUT FLOW (KG. HEAVY METAL PER DAY) URANIUM	INPUT FLOW (KG. HEAVY METAL PER DAY) THORIUM	REMOVAL FLOW (IF NON-ZERO) (KG. HEAVY METAL PER DAY) URANIUM	REMOVAL FLOW (IF NON-ZERO) (KG. HEAVY METAL PER DAY) THORIUM	PERCENT REMOVED
1	2.454	0.0			
2	2.454	0.0			
3	2.454	0.0			
4	2.454	0.0	0.0245	0.0	1.000
5	2.430	0.0	0.0243	0.0	1.000
6	2.405	0.0	0.0004	0.0	0.016
7	2.405	0.0			
8	2.405	0.0	0.1202	0.0	5.000
9	2.285	0.0			
10	2.285	0.0	0.0004	0.0	0.016
11	2.284	0.0			
12	2.284	0.0			
13	2.284	0.0			
14	2.284	0.0	0.0571	0.0	2.500
15	2.227	0.0			
16	2.227	0.0	0.0668	0.0	3.000
17	2.160	0.0			
18	2.160	0.0	0.0005	0.0	0.023
19	2.160	0.0			
20	2.160	0.0	0.1080	0.0	5.000

PROCESS SUMMARY

URANIUM INPUT = 2.454 KGHM/DAY URANIUM OUTPUT = 2.052 KGHM/DAY TOTAL URANIUM REMOVED = 0.402 KGHM/DAY

THORIUM INPUT = 0.0 KGHM/DAY THORIUM OUTPUT = 0.0 KGHM/DAY TOTAL THORIUM REMOVED = 0.0 KGHM/DAY

CONVERSION AND COATING
(SEE FLOW SHEET NO. 4)

STEP NO.	INPUT FLOW (KG. HEAVY METAL PER DAY) URANIUM	THORIUM	REMOVAL FLOW (IF NON-ZERO) (KG. HEAVY METAL PER DAY) URANIUM	THORIUM	PERCENT REMOVED
1	2.052	0.0			
2	2.052	0.0			
3	2.052	0.0			
4	2.052	0.0			
5	2.052	0.0			
6	2.052	0.0			
7	2.052	0.0	0.0021	0.0	0.100
8	2.050	0.0			
9	2.050	0.0	0.0020	0.0	0.100
10	2.048	0.0			
11	2.048	0.0			
12	2.048	0.0	0.0020	0.0	0.100
13	2.046	0.0	0.0020	0.0	0.100
14	2.044	0.0			
15	2.044	0.0	0.0020	0.0	0.100
16	2.042	0.0			
17	2.042	0.0			
18	2.042	0.0	0.0020	0.0	0.100
19	2.040	0.0	0.0020	0.0	0.100
20	2.038	0.0			
21	2.038	0.0	0.0020	0.0	0.100
22	2.035	0.0			
23	2.035	0.0			
24	2.035	0.0	0.0020	0.0	0.100
25	2.033	0.0	0.0020	0.0	0.100
26	2.031	0.0			
27	2.031	0.0	0.0020	0.0	0.100
28	2.029	0.0			
29	2.029	0.0			
30	2.029	0.0	0.0020	0.0	0.100
31	2.027	0.0	0.0020	0.0	0.100
32	2.025	0.0			
33	2.025	0.0	0.0020	0.0	0.100
34	2.023	0.0			
35	2.023	0.0			
36	2.023	0.0	0.1012	0.0	5.000
37	1.922	0.0			
38	1.922	0.0	0.0577	0.0	3.000
39	1.864	0.0			
40	1.864	0.0	0.0013	0.0	0.072
41	1.863	0.0			
42	1.863	0.0			
43	1.863	0.0	0.0932	0.0	5.000

PROCESS SUMMARY

URANIUM INPUT = 2.052 KGHM/DAY URANIUM OUTPUT = 1.770 KGHM/DAY TOTAL URANIUM REMOVED = 0.282 KGHM/DAY

THORIUM INPUT = 0.0 KGHM/DAY THORIUM OUTPUT = 0.0 KGHM/DAY TOTAL THORIUM REMOVED = 0.0 KGHM/DAY

FUEL STICK FABRICATION
(SEE FLOW SHEET NO. 5)

STEP NO.	INPUT FLOW (KG. HEAVY METAL PER DAY) URANIUM	INPUT FLOW (KG. HEAVY METAL PER DAY) THORIUM	REMOVAL FLOW (IF NON-ZERO) (KG. HEAVY METAL PER DAY) URANIUM	REMOVAL FLOW (IF NON-ZERO) (KG. HEAVY METAL PER DAY) THORIUM	PERCENT REMOVED
1	1.770	0.0			
2	1.770	23.515			
3	1.770	23.515			
4	1.770	23.515	0.0053	0.0705	0.300
5	1.765	23.445			
6	1.765	23.445			
7	1.765	23.445	0.0035	0.0469	0.200
8	1.761	23.398			
9	1.761	23.398	0.0018	0.0234	0.100
10	1.759	23.374			

PROCESS SUMMARY

URANIUM INPUT = 1.770 KGHM/DAY URANIUM OUTPUT = 1.759 KGHM/DAY TOTAL URANIUM REMOVED = 0.011 KGHM/DAY

THORIUM INPUT = 23.515 KGHM/DAY THORIUM OUTPUT = 23.374 KGHM/DAY TOTAL THORIUM REMOVED = 0.141 KGHM/DAY

FUEL ELEMENT ASSEMBLY
(SEE FLOW SHEET NO. 6)

STEP NO.	INPUT FLOW (KG. HEAVY METAL PER DAY) URANIUM	INPUT FLOW (KG. HEAVY METAL PER DAY) THORIUM	REMOVAL FLOW (IF NON-ZERO) (KG. HEAVY METAL PER DAY) URANIUM	REMOVAL FLOW (IF NON-ZERO) (KG. HEAVY METAL PER DAY) THORIUM	PERCENT REMOVED
1	1.759	23.374			
2	1.759	23.374			
3	1.759	23.374			
4	1.759	23.374			
5	1.759	23.374			
6	1.759	23.374			
7	1.759	23.374			
8	1.759	23.374			
9	1.759	23.374			
10	1.759	23.374			
11	1.759	23.374	0.0044	0.0584	0.250
12	1.755	23.316			
13	1.755	23.316			
14	1.755	23.316			
15	1.755	23.316			
16	1.755	23.316			
17	1.755	23.316			
18	1.755	23.316	0.0006	0.0078	0.033
19	1.754	23.308			
20	1.754	23.308	0.0044	0.0583	0.250
21	1.750	23.250			
22	1.750	23.250			
23	1.750	23.250			
24	1.750	23.250			
25	1.750	23.250			
26	1.750	23.250			

PROCESS SUMMARY

URANIUM INPUT = 1.759 KGHM/DAY URANIUM OUTPUT = 1.750 KGHM/DAY TOTAL URANIUM REMOVED = 0.009 KGHM/DAY

THORIUM INPUT = 23.374 KGHM/DAY THORIUM OUTPUT = 23.250 KGHM/DAY TOTAL THORIUM REMOVED = 0.124 KGHM/DAY

SUMMARY OF PROCESS FLOWS

	PROCESS NAME	INPUT (KGHM/DAY)		OUTPUT (KGHM/DAY)		TOTAL REMOVED (KGHM/DAY)	
		URANIUM	THORIUM	URANIUM	THORIUM	URANIUM	THORIUM
1	MATERIAL RECEIVING	2.455	0.0	2.455	0.0	0.0	0.0
2	RESIN LOADING	2.455	0.0	2.454	0.0	0.001	0.0
3	CARBONIZATION	2.454	0.0	2.052	0.0	0.402	0.0
4	CONVERSION AND COATING	2.052	0.0	1.770	0.0	0.282	0.0
5	FUEL STICK FABRICATION	1.770	23.515	1.759	23.374	0.011	0.141
6	FUEL ELEMENT ASSEMBLY	1.759	23.374	1.750	23.250	0.009	0.124

TOTAL AMOUNT OF URANIUN REMOVED FROM ALL PROCESSES = 0.705

TOTAL AMOUNT OF THORIUM REMOVED FROM ALL PROCESSES = 0.265

IHC0021 STOP 0

Appendix

If a feedback loop is present in a system, but the details of the flows within the loop are not required, the following approximation can be made. Consider the following feedback loop.

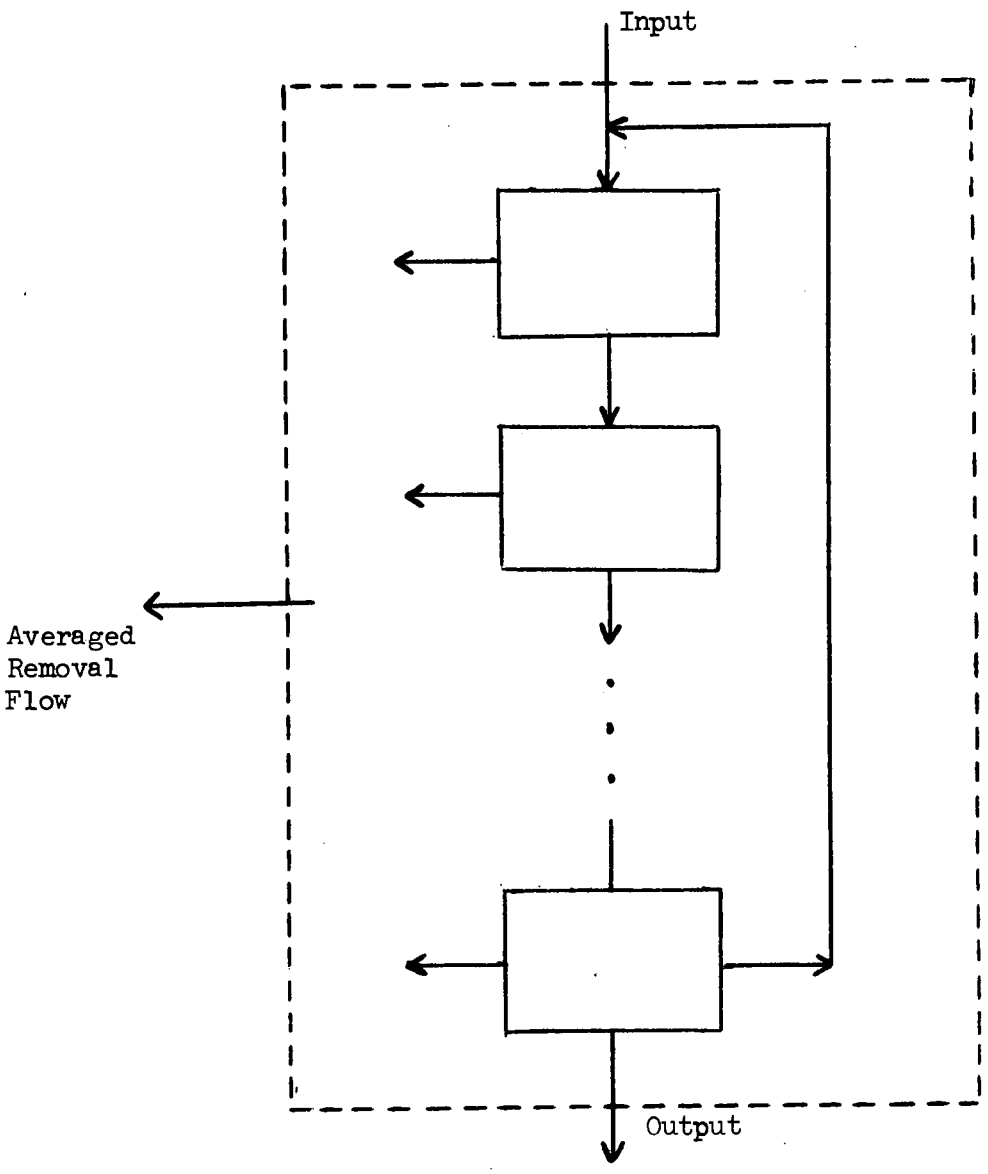

It is possible to construct a single box (dotted line) around the internals of the feedback loop. This modified process step would then fit within the required limitations (i.e., single input, single output, and single removal flow). An approximation of this kind is shown in the resin loading process of the sample flowsheets.

DISTRIBUTION

J. L. Anderson
S. J. Ball
R. L. Beatty
H. W. Behrman
A. L. Boch
R. A. Bradley
J. P. Callahan
D. A. Canonico
A. J. Caputo
C. E. Clifford
H. E. Cochran
T. E. Cole
J. A. Conlin
J. H. Coobs
D. Costanzo
H. J. de Nordwall
F. C. Davis
W. P. Eatherly
R. W. Glass
P. A. Haas
J. L. Heck
J. W. Hill
R. M. Hill, Jr.
F. J. Homan
J. D. Jenkins
D. R. Johnson
P. R. Kasten
W. J. Lackey
T. B. Lindemer
A. L. Lotts
J. E. Mack
R. E. MacPherson
A. P. Malinauskas
W. R. Martin
S. R. McNeany (3)
K. J. Notz
W. H. Pechin
L. C. Oakes
A. R. Olsen
P. L. Rittenhouse
J. P. Sanders
J. E. Sease
J. H. Shaffer
R. L. Shepard
J. W. Snider
R. S. Stone
M. Tobias
J. E. Van Cleve
V. C. A. Vaughen
T. N. Washburn
G. D. Whitman

EXTERNAL DISTRIBUTION

Assistant Director, Gas-Cooled Reactor Projects, RRD-G
Director, Engineering Division, ORO
Director, Research and Technical Support Division, ORO
Director, Reactor Division, ORO
Chief, Fuels Tecynology Branch, RRD-GF
Chief, Processing and Fabrication Branch, RRD-GP
G. E. Besenbruch, GA
C. A. Heath, GA
L. H. Brooks, GA
M. E. Kantor, GA
A. P. Roeh, ACC