CENTRAL RESEARCH LIBRARY

OAK RIDGE NATIONAL LABORATORY
OPERATED BY
UNION CARBIDE CORPORATION
NUCLEAR DIVISION

POST OFFICE BOX X
OAK RIDGE, TENNESSEE 37830

ORNL-MIT-187

DATE: March 24, 1974 COPY NO. 13

SUBJECT: Utilization of a Low Temperature (300°F) Water Dominated Geothermal Source for Power Generation

AUTHOR: P. L. Jensen, P. C. Ahrens, and A.S.Y. Ho*

Consultants: L. C. Fuller, S. L. Milora, and R. N. Lyon

ABSTRACT

A 100-MW(electric) power plant was designed to utilize a low temperature (300°F) geothermal water source. Both direct steam flashing and alternate fluid supercritical Rankine cycles were considered. Total plant and operating costs, including well cost, heat exchangers, pumps, turbines, and other major components, were estimated. Alternate fluid cycles were competitive on a cost basis with flashing for this particular energy source. Of the fluids examined, Freon-22 appeared to be the most attractive with a cost of 1.06¢/kWhr. Overall costs ranged from 1.73 to 1.09¢/kWhr for 1 to 4 flashing steps. A computer code was written to simulate the flashing thermodynamics for up to four flashing steps.

[redacted] Removed Per LRD 3/21/77 hlr

*Revised by J.W. Tester and R.M. Mayer

OAK RIDGE NATIONAL LABORATORY
CENTRAL RESEARCH LIBRARY
DOCUMENT COLLECTION
LIBRARY LOAN COPY
DO NOT TRANSFER TO ANOTHER PERSON
If you wish someone else to see this document, send in name with document and the library will arrange a loan.
UCN-7969
(3 3-67)

Oak Ridge Station
School of Chemical Engineering Practice
Massachusetts Institute of Technology

[redacted]

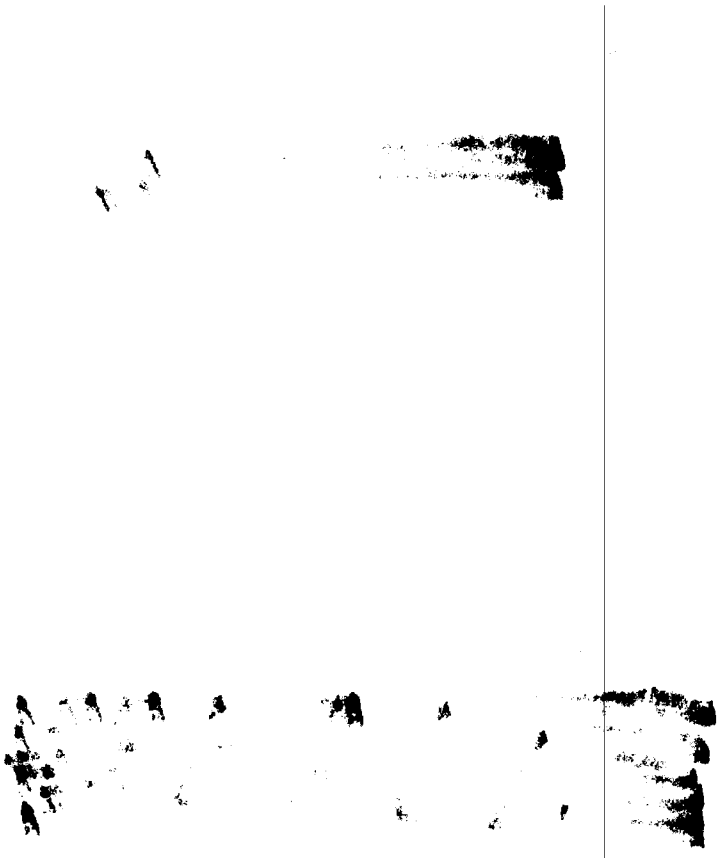

Summary

		Page
1.	Summary	4
2.	Introduction	5
	2.1 Background and Approach	5
	2.2 Flashing	5
	2.3 Alternate Working Fluids	5
3.	Procedure	6
	3.1 Flashing	6
	3.1.1 Flashing Thermodynamics	6
	3.1.2 Process Equipment	6
	3.1.3 Flashing Optimization	8
	3.1.4 Turbine Routing	9
	3.1.5 Other Considerations	10
	3.2 Alternate Working Fluids	10
	3.2.1 Desirable Thermodynamic Properties and Choice of Working Fluid	10
	3.2.2 Thermodynamics of Supercritical Rankine Cycles	10
	3.2.3 Sizing Working Fluid Process Equipment	13
4.	Results	15
	4.1 Flashing Results	15
	4.2 Alternate Fluid Cycles	15
5.	Discussion of Results	23
	5.1 Flashing Schemes	23
	5.2 Alternate Working Fluid Cycles	27
	5.3 Comparison of Results	28
6.	Conclusions	29
7.	Recommendations	29
8.	Acknowledgments	29
9.	Appendix	30
	9.1 Alternate Working Fluid Cycle Calculations	30
	9.2 Computer Listings	40
	9.3 Plant Costing	46
	9.4 Steam Turbine Costing	47
	9.5 Costing of Alternate Working Fluid Turbines	48
	9.6 Costing of Other Flashing Equipment	49
	9.7 Costing Alternate Working Fluid Process Equipment	50
	9.8 Thermophysical Property Estimation and Calculation of $\overline{\gamma}$	50
	9.9 Heat Exchanger Design	56
	9.10 Nomenclature	61
	9.11 Literature References	63

1. SUMMARY

A proposed geothermal 100 MW(electric) power plant was designed utilizing saturated water at 300°F as an energy source corresponding to predictions for the Raft River project in Idaho. An unlimited amount of hot water and 50°F cooling water were assumed in considering two energy conversion plans. One plan flashed the hot water to a lower pressure to obtain steam to run a turbine. The other plan used the hot water to heat an alternate working fluid for use in a supercritical Rankine cycle.

In the flashing scheme the design parameters were the number of flashing stages (1 to 4), the stage pressures (60-10 psig), and the condenser pressures (2.0, 1.5, 1.0, and 0.5 psia). A computer code was written to simulate flashing thermodynamics and determine costs based on a turbine efficiency of 78%. Costs at the busbar (excluding distribution costs) were calculated using 18% of the complete plant investment (capital equipment, contingency fee, overhead, etc.) for annual fixed charges, $800,000/yr operating expenses, and $146,000/yr utility costs for the cooling water pump. The minimum cost per kWhr decreased linearly with the number of flashes to three flashes where it began to plateau at 1.09¢/kWhr for four flashes.

Alternate working fluids were selected based on their thermodynamic properties including critical temperature and pressure and heat capacity. The cycle operating pressure was chosen such that no fluid would condense in the turbine and a negligible amount of superheat would result from the turbine expansion. A maximum temperature of 280°F was specified in the heat exchanger design for the working fluid and a minimum temperature difference of 10°F between the water and working fluid was maintained throughout the heat exchanger. The working fluids considered were Freons-13B1, -12, -22, and propane with turbine and pump efficiencies of 85 and 75%, respectively. All alternate working fluid (binary) cycles examined had significantly higher thermodynamic conversion efficiencies in terms of minimizing hot water usage for a fixed plant output than any of the flashing schemes. For the flashing schemes, water utilization increased from 3.32 watts/lb water for one stage to 4.98 watts/lb water for four flashes while that for the working fluids ranged from 6.28 to 8.38 watts/lb water.

However, even though the capital equipment costs (heat exchangers, pumps, condensers) were considerably higher for the alternate working fluid cycles, their cost per kWhr was competitive with even the best four-stage flashing scheme because their well (hot water) requirements and turbine costs were less. The estimated electricity cost for the best working fluid cycle (Freon-22) was 1.06¢/kWhr. Operating conditions (inlet pressure and condensing temperature) were selected on the basis of a thermodynamic optimum, frequently resulting in prohibitively large pumping energy requirements. A cost optimum should be considered in future designs of alternate working fluid cycles. However, at this stage, alternate fluid cycles appear competitive with the direct flashing scheme in terms of cost and are far superior in their utilization of the hot water geothermal source.

2. INTRODUCTION

2.1 Background and Approach

The specific geothermal source being considered in this study is saturated water available at a temperature of 300°F (149°C). It is located in the Raft River Basin in Idaho, where a large aquifer at a 5000 ft depth produces hot water. The source was assumed to be inexhaustible (with water re-injection) and to be very low in dissolved solids content. Cooling water is available at 50°F from a shallow aquifer. This study attempted to optimize the utilization of this particular energy source.

One method examined was flashing, where the saturated water experiences an isenthalpic pressure change, evolving a certain amount of steam which is then passed through a turbine, generating electricity. The other method considered using alternate working fluids is supercritical Rankine cycles. In this method the working fluid receives its energy from hot water via indirect heat exchange; the resulting supercritical fluid is passed through a turbine, generating electricity, condensed, and pumped to its operating pressure.

Some development work has considered flashing (8) and alternate fluid power cycles (4, 8, 12, 14). Hansen (8) discussed the optimal thermodynamic pressure for flashing and recommends that any number above two stages of flashing is thermodynamically undesirable. Cortez et al. (4) have compared isobutane as a working fluid to a proprietary process labelled the "Hutchinson-Holt" cycle.

2.2 Flashing

For the flashing method of energy conversion, design parameters were the number of flashes (1-4), the flashing pressure(s) (60, 50, 40, 30, 20, 10 psia) and turbine condenser pressure(s) (2.0, 1.5, 1.0, 0.5 psia). These parameters establish the necessary flow rates for a 100 MW(electric) power plant and therefore the size of the capital equipment, i.e., flash tank(s), turbine(s), condenser(s), condensate pump(s) and also the number of wells required. These calculations were computer coded and an optimum design in terms of total cost was determined.

2.3 Alternate Working Fluids

Using the relatively low temperature heat source of saturated water at 300°F, only single fluid supercritical Rankine cycles were considered in order to obtain higher thermodynamic efficiencies.

The parameters varied were the type of fluid and the peak pressure in the cycle. Due to construction material limitations, the peak pressure attainable by the working fluid was constrained to be less than 3000 psia by following the design criteria set forth by Landgraf et al. (14).

3. PROCEDURE

3.1 Flashing

3.1.1 Flashing Thermodynamics

The flashing process can be described on a temperature-entropy diagram. As can be seen from Fig. 1, saturated liquid water at 300°F is available at point 1. Flashing involves an isenthalpic pressure change to some point 2. The percent vapor at point 2 is given by a simple enthalpy balance:

$$\frac{H_2 - H_4}{H_3 - H_4} = \text{Vapor Fraction} .$$

At this point, the vapor fraction is separated from the liquid fraction and can be represented at point 3. Ideally, the vapor is isentropically expanded through a turbine to point 5. However, due to non-idealities, the turbine efficiency is less than 100% which causes the line to resemble line 3-6. As can easily be seen, efficiency is directly related to the enthalpy lost.

$$\Delta H_{ideal} = H_5 - H_3$$

$$\Delta H_{real} = (H_5 - H_3) \times \text{efficiency} = H_6 - H_3 .$$

After expanding through the turbine, the steam is condensed and the condensate re-injected into a well. The saturated liquid remaining at point 4 can then be flashed again, and the same sequence as above can be repeated until the final pressure is reached. After the last flash, the remaining saturated liquid is returned to the aquifer via a re-injection well.

3.1.2 Process Equipment

The major components used in geothermal flashing power plants are steam turbines, flash tanks, condensers, cooling water pumps, and the wells themselves. The design and assumptions made concerning each item are discussed below.

1. Turbines - The turbine designs used in this study are based on a geothermal turbine to be installed at the Geysers power plant in 1976. It will be a four-flow, 23 in. last stage blade length turbine rated at 135 MW(electric). The method for sizing and costing a particular turbine for each flashing application is explained in detail in Appendix 9.4.

The calculation of turbine efficiency is difficult (5) and for our purposes, a fixed value of 78% was used. Starting with a basic turbine efficiency of 90%, it was found that at the turbine exit, the steam had ∿10% moisture. As a general rule, for each 1% of moisture, the turbine efficiency is decreased by 1% (5). Since the mean moisture content is 5%, the efficiency is now 90 − 5 = 85%. The final correction is made for heat exhaust loss, which for our range of steam velocities, corresponded to a ∿7% loss in efficiency resulting in a final value of 78%.

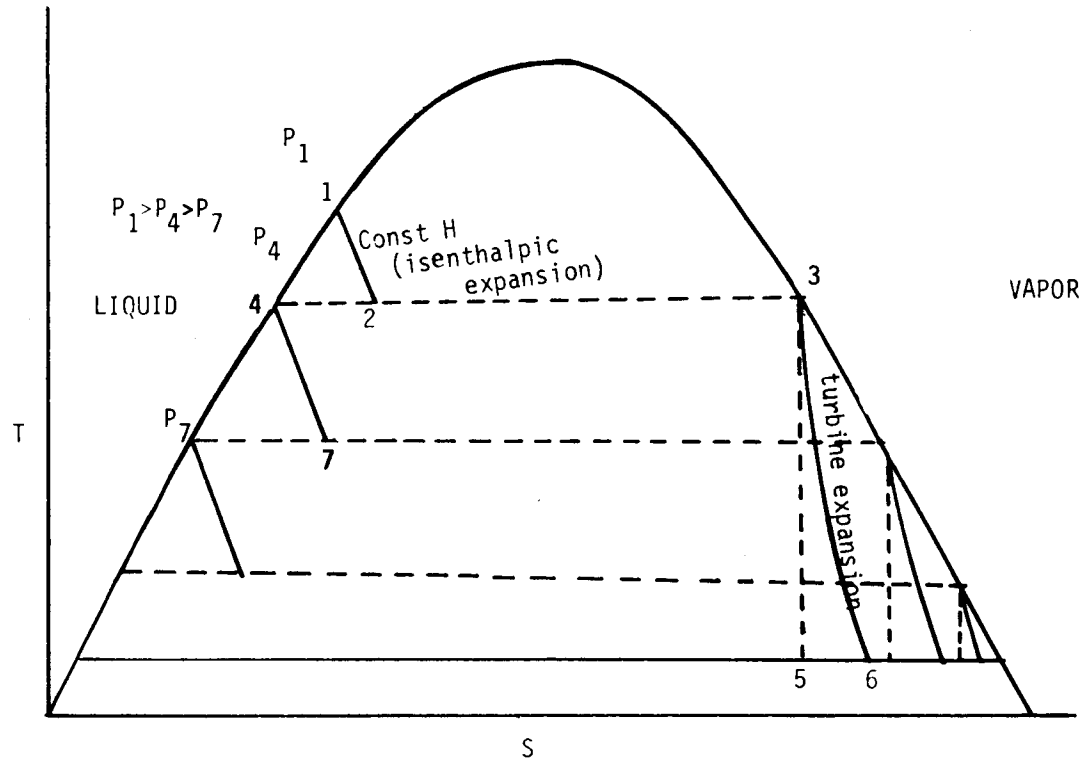

MASSACHUSETTS INSTITUTE OF TECHNOLOGY
SCHOOL OF CHEMICAL ENGINEERING PRACTICE
AT
OAK RIDGE NATIONAL LABORATORY

TEMPERATURE-ENTROPY DIAGRAM
FOR WATER

DATE	DRAWN BY	FILE NO.	FIG.
3-24-74	PLJ	CEPS-X-187	1

2. Wells - Assuming a velocity of 10 ft/sec for a 10-in.-diam well, the flow rate is 1,125,000 lb/hr per well. An additional well was also required for re-injection and a 5% penalty was applied to account for steam requirements to operate steam ejectors for removing non-condensables.

3. Condenser - The condenser must have the capacity to hold a certain percentage of the overall steam flow, plus ∿30 times that in cooling water flow since it will be used as a spray condenser.

4. Flash Tank - Flash tanks were assumed to be positioned directly on the well head itself to prevent premature flashing. Thus, if a 4-flash plant is considered, and there are 18 wells, the number of flash tanks = 4(18) = 72.

5. Condenser Pump - Since the exit pressures from the turbines range from 2.0 to 0.5 psia to get the condensed water back to atmospheric pressure without pumping, a barometric condenser is used. For every pound of steam entering the condenser, ∿30 pounds of water at 50°F must be added to account for the latent heat of vaporization. Thus, the pumps must handle six times the steam flow in water with about 1.5 atm of head loss.

3.1.3 Flashing Optimization

In minimizing the cost of a flashing power generation plant, several variables were considered.

1. Number of flashes (1-4)

2. Flashing pressure (60-5 psia)

3. Turbine exit pressure (2.0-0.5 psia),

A computer program was written to simulate flashing conditions. The program performs calculations using steam table subroutines of the ORCENT program developed at ORNL (2). For each flashing step, the code proceeds as follows:

1. Beginning as saturated liquid, an isenthalpic line to the flash pressure is used to calculate the vapor fraction.

2. The steam enthalpy at the turbine inlet is calculated.

3. An isentropic line to the turbine exit pressure is used to find the ideal exit enthalpy.

4. The real enthalpy change is calculated by multiplying the ideal ΔH by the turbine efficiency (0.78).

5. Subtracting the real ΔH from the inlet H yields the actual enthalpy at the condenser inlet.

6. The enthalpy per pound of entering water which is the real ΔH times the vapor fraction of the flash is calculated.

7. The total water flow rate (lbs of water) equals the megawatt rating of the plant in Btu divided by the summation of the individual power/pound ratios calculated for each flash.

8. From the water flow rate the steam flow rate and the entering and exiting volumetric flow rates can be obtained.

Since the set of calculations must be performed for each flash, for a design with four flashes, if one were considering six different flashing pressures at each point, and four different condenser pressures; the number of flash calculations would be $4 \times 4^4 \times 6^4 = 1{,}327{,}104$. For this four flash case, this could represent as many as 331,776 possible plant designs.

There are obviously too many possible combinations to run an exhaustive search, and since no knowledge of the response surface was known, it was decided to use a "grid" method in large pressure increments.

Flashing pressures were varied between 60 and 10 psia in increments of 10 psia and the condenser pressures were varied from 2.0 to 0.5 psia in increments of 0.5 psia. After the area of the minimum was determined, a search was done in smaller pressure increments to find the true minimum. For the four-flash model, only seven different flashing pressure sequences were examined, due to time limitations, and the fact that for each different set of flashing pressures, there are $3^4 = 81$ possible condenser pressure combinations, using only three different condenser pressures (1.5, 1.0, 0.5 psia).

Since the optimum was to be considered on a cost basis, and not a thermodynamic one, the cost was a function of the major pieces of process equipment (see Appendix 9.6 for details). The code computes the necessary equipment sizes and costs which vary according to the specific thermodynamic conditions.

3.1.4 Turbine Routing

Besides the thermodynamics of flashing and the equipment costing, any multistage simulation must properly consider the problem of routing. In other words, if a four flash system with four condenser pressures is used, the optimal turbine arrangement must be determined. The program routes steam flows which have the same condenser pressure through the same turbogenerators. If the vapor streams exit the turbines at three different condenser pressures, three different turbogenerator units will be required. If two condenser pressures are the same and the third is different, the first two will be routed through the same turbine and the third through a separate turbine. However, as flow increases through a turbine, only six exhaust ends can be added after which an additional turbogenerator unit must be used to handle the additional flow. A listing of the computer code is given in Appendix 9.2 and in it the routing of a four-flash system is demonstrated.

3.1.5 Other Considerations

The condenser cooling water pump is rated at 2245 hp (1.67 MW). This amount of power will be bought as a utility (@ 1¢/kWhr) because of problems in scaling the plant up to 101.67 MW.

3.2 Alternate Working Fluids

3.2.1 Desirable Thermodynamic Properties and Choice of Working Fluid

Alternate working fluids for supercritical Rankine cycle use were chosen primarily on the basis of their thermal and chemical compatibility and stability and thermodynamic properties including critical temperature and pressure. A nearly uniform heat capacity, C_p, was desirable for the heat exchanger as this would permit minimization of the integrated temperature difference between the working fluid and the hot water source and thus maximize the final temperature of the working fluid.

A supercritical Rankine cycle has a more favorable overall heat capacity than a subcritical Rankine cycle. Since the range of working fluid temperatures was limited to 70–280°F, the main criteria for choosing a fluid was its critical temperature. Therefore, only fluids which had a critical temperature between 100 and 250°F were considered.

The critical pressure had to be less than 3000 psia due to materials limitations, but more realistically should be less than 1000 psia so that operating pressures in the heat exchanger would be in excess of P_c to keep C_p uniform.

3.2.2 Thermodynamics of Supercritical Rankine Cycles

Once the working fluid was chosen, a supercritical Rankine cycle for that fluid was constructed on a log P-H diagram (Fig. 2. and Appendix 9.1.1). From the log P-H diagram the enthalpy as a function of temperature along the heat exchanger was obtained and a temperature profile for the working fluid was constructed (Fig. 3, see Appendix 9.1.2).

A temperature-heat transferred diagram (T-Q diagram) was used to establish temperature profiles of the water and working fluid in the heat exchanger such that a pinch point could be avoided. Following the procedure used by Landgraf et al. (14) a minimum ΔT of 10°F between the fluid and water was chosen. In the temperature range of the heat exchanger, the heat capacity of the water is nearly constant and therefore, at any point along the heat exchanger the amount of heat transferred, Q, is a linear function of temperature.

The final temperature of the water was obtained from the T-Q diagram and by a first law balance around the heat exchanger, the amount of heat added and the flow rate of the working fluid were determined on the basis of a water flow rate of 1 lb_m/hr (see Appendix 9.1.4). The net work from the working fluid cycle was calculated by the difference between the turbine work output and the feed pump work requirements (see Appendix 9.1.6).

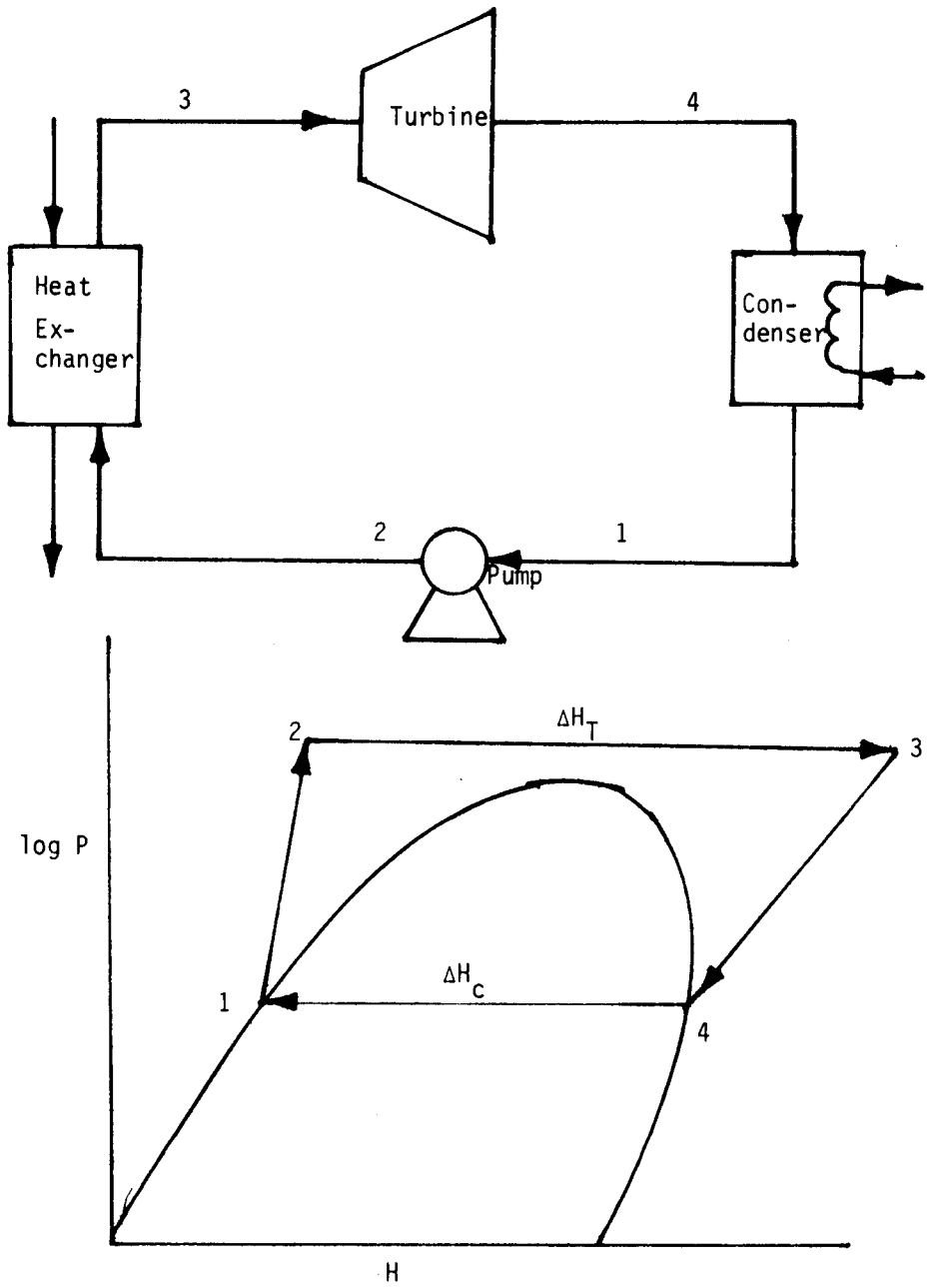

MASSACHUSETTS INSTITUTE OF TECHNOLOGY
SCHOOL OF CHEMICAL ENGINEERING PRACTICE
AT
OAK RIDGE NATIONAL LABORATORY

SUPERCRITICAL RANKINE CYCLE FOR ALTERNATE WORKING FLUID

DATE	DRAWN BY	FILE NO.	FIG.
3-24-74	ASYH	CEPS-X-187	2

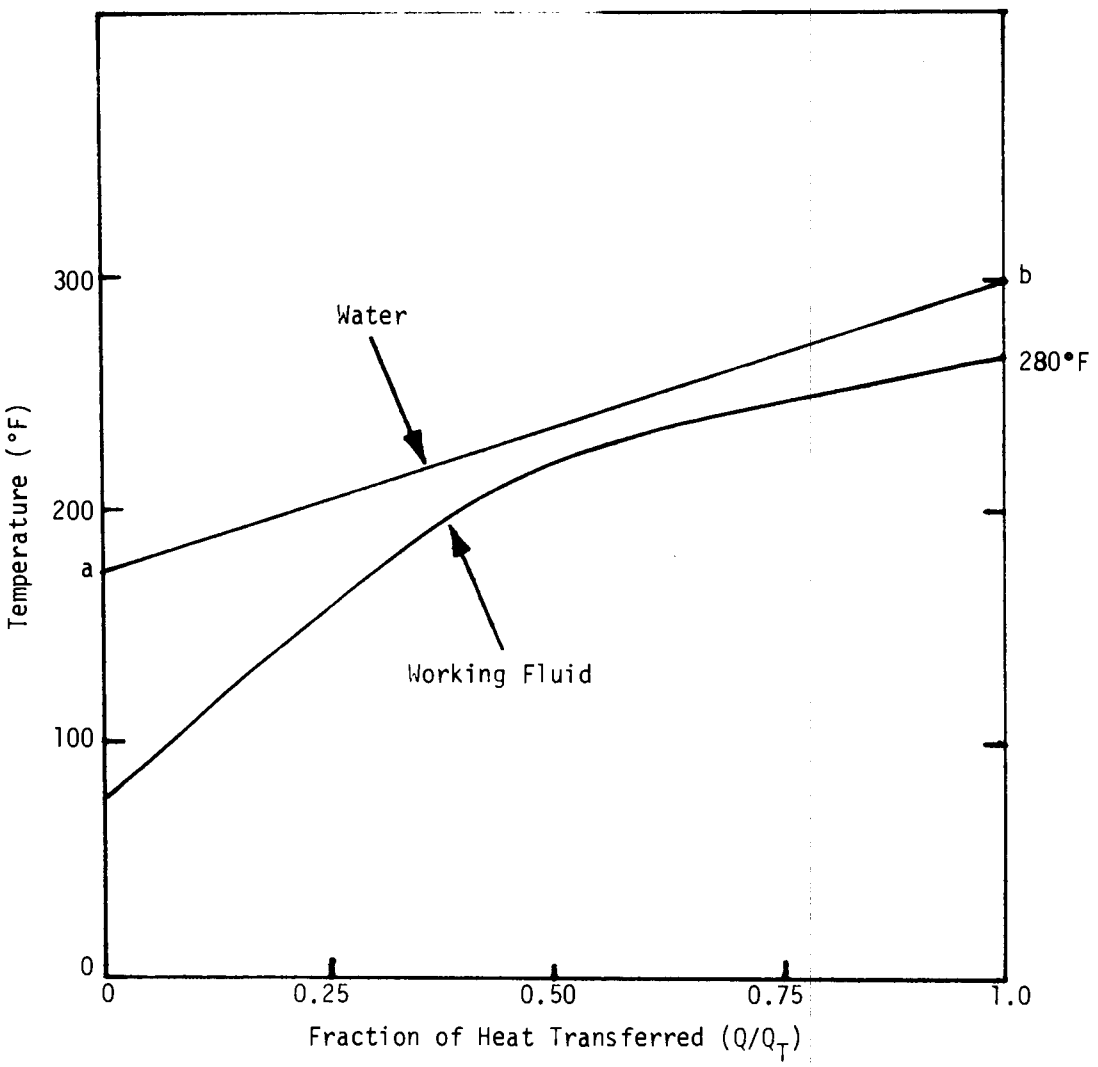

MASSACHUSETTS INSTITUTE OF TECHNOLOGY
SCHOOL OF CHEMICAL ENGINEERING PRACTICE
AT
OAK RIDGE NATIONAL LABORATORY

T-Q DIAGRAM FOR HEAT EXCHANGER

DATE	DRAWN BY	FILE NO.	FIG.
3-24-74	ASYH	CEPS-X-187	3

$$W_{net}/lb_m^w = W_T/lb_m^w - W_p/lb_m^w \quad (1)$$

Using the value of W_{net}/lb_m^w the water and working fluid flow rates were determined for a 100 MW(electric) power plant. The amount of heat removed in the condenser was found from the working fluid flowrate and the latent heat of condensation at 70°F.

3.2.3 Sizing Working Fluid Process Equipment

Heat Exchanger. The surface area required for the heat exchangers in the working fluid cycles was determined from the equation

$$Q_{HE} = U_{HE} A_{HE} (\Delta T_{LM})_{HE} f \ . \quad (2)$$

The heat flux, Q_{HE}(Btu/hr), was determined from the cycle design (Section 3.2.2) as was the log mean temperature difference, $(\Delta T_{LM})_{HE}$. The correction factor f is a measure of the departure from ideal counter flow in the exchanger. Due to the large variation in the temperature difference between the water and the working fluid, a value of 0.8 for f was assumed for Freons-12, -22, and propane, whereas Freon-13B1 has a more nearly constant temperature difference so a value of 0.9 was assumed. The values are rough estimates based on a correlation presented in Fraas and Ozisik (6). The overall heat transfer coefficient U_{HE} is a function of the exchanger geometry, flow rates, and fluid properties. The tube side (supercritical fluid) heat transfer coefficient was estimated from the correlation of Bringer and Smith (3) which is a modification of the more conventional Dittus-Boelter equation

$$Nu_{WF} = 0.0266 \ Re_{WF}^{0.77} \ Pr_{WF}^{0.55} \quad (3)$$

where

$$Nu_{WF} = \frac{h_{WF} \ D_1}{k_{WF}}$$

$$Re_{WF} = \frac{G_{WF} \ D_1}{\mu_{WF}}$$

$$Pr_{WF} = \frac{C_{p_{WF}} \ \mu_{WF}}{k_{WF}}$$

Solving for h_{WF},

$$h_{WF} = 0.0266 \ \bar{\gamma}_{WF} G_{WF}^{0.77} \ D_1^{-0.22} \quad (4)$$

where

$$\bar{\gamma}_{WF} = \left(\frac{C_{p_{WF}}^{0.55} \; k_{WF}^{0.45}}{\mu_{WF}^{0.22}} \right)$$

The quantity γ_{WF} is temperature dependent and varies through the heat exchanger. The heat exchanger was divided into 20°F temperature intervals and γ_{WF} calculated for each interval (see Appendix 9.8 for property estimations and γ_{WF} calculations). A weighted average, $\bar{\gamma}_{WF}$, was then calculated based on the fraction of heat transferred in each interval and this weighted average was used in Eq. (4). The shell-side heat transfer coefficient was estimated from the Dittus-Boelter equation:

$$Nu_W = 0.023 \; Re_W^{0.8} \; Pr_W^{0.3} \tag{5}$$

or

$$h_W = 0.023 \left(\frac{k_W^{0.7} \; C_{p_W}^{0.3}}{\mu_W^{0.5}} \right) D_2^{-0.2} \; G_W^{0.8} \tag{6}$$

The overall heat transfer coefficient can then be calculated assuming negligible fouling by summing the working fluid side, water side, and tube wall resistances:

$$U_{HE} = \frac{1}{\frac{1}{h_W} + \frac{t}{k_t} + \frac{1}{h_{WF}}} \tag{7}$$

Multiple units were required for all fluids in order to obtain reasonable size heat exchangers (<60,000 ft^2).

Pump and Motor. The pump and motor horsepowers $\dot{W}_p$ were determined from the pump work calculation W_p/lb_m^w in the cycle design and the required hot water flow rate N_w

$$\dot{W}_p = \left[\frac{W_p}{lb_m^w} \right] \cdot N_w$$

The efficiency of the motor and pump combination is assumed to be 75%.

Turbine. The turbine power rating was determined as the sum of the net power (100 MW) and the total pump power requirement. Details of turbine sizing are covered in Appendix 9.5.

Condenser. The surface area required for the working fluid condenser was determined from the equation

$$Q_{con} = U_{con} A_{con} (\Delta T_{LM})_{con} \tag{9}$$

The condenser heat flux Q_{con} was obtained from the cycle design as was $(\Delta T_{LM})_{con}$. The overall heat transfer coefficient U_{con} was assumed to be approximately 200 Btu/hr-ft^2-°F.

Cooling Water Pump and Motor. The power requirements for the cooling water pump and motor (75% efficiency) were based on the cooling water flow rate and an assumed 15 psia pressure drop in the condenser.

$$W_{CW\ pump} = \left[\frac{\underline{V}\ \Delta\ p}{\eta}\right]\left[N_{CW}\right] \tag{10}$$

The costs for all the above equipment are considered in Appendix 9.7.

4. RESULTS

4.1 Flashing Results

The results of the flashing design are shown in Table 1. For the calculation of ¢/kWhr, it has been assumed that the fixed charges, which include depreciation, interest, taxes, insurance, and return on investment are 18% (4). For a 100 MW plant, the labor, supervision, maintenance and supplies are estimated to be about $800,000 per year.

Added to this cost per year is the electricity needed for the cooling water pump for the condenser. According to Peters and Timmerhaus (17), this can be obtained at 1.0¢/kWhr or on a yearly basis for $146,000. Thus, the ¢/kWhr comes from an 18% variable charge plus a $946,000/year fixed charge.

The optimum equipment arrangements and fluid flows are shown in Figs. 4 and 5.

4.2 Alternate Fluid Cycles

The important thermodynamic properties and cycle operating conditions for the four fluids considered, Freon-12, -22, -13B1, and propane, are listed in Table 2. In addition, the relative efficiencies defined as the net work output per lb_m^w are compared to the four flashing cases examined. The total available work is based upon an initial state at 300°F and 67 psia and a final state of 50°F and 14.7 psia with a sink temperature T_0 of 50°F. Thus, the relative efficiency is:

Table 1. Optimal Results from Flashing Schemes — 100 MW plant

1 Flashing Stage

Flash Pressure = 20 psia Condenser Pressure = 1.0 psia

Turbogenerator Cost = $7,239,000 6-23"*

Condenser Cost = $46,560

Flash Tank Cost = $12,600

Well Cost = $14,039,000 Number of Wells = 56.2 (including reinjection + 5% penalty for non-condensables)

Pump Cost = $27,000

Total Plant Cost = $21,364,000

Complete Cost = $78,834,000

¢/kWhr = 1.73

2 Flashing Stages

Flash 1 Pressure = 30.0 psia Condenser Pressure = 1.5 psia

Flash 2 Pressure = 10.0 psia Condenser Pressure = 1.5 psia

Turbogenerator Cost = $5,297,800 6-23"

Condenser Cost = $51,000

Flash Tank Cost = $33,270

Well Cost = $11,917,500 Number of Wells = 47.7 (including reinjection + 5% penalty for non-condensables)

Total Plant Cost = $17,326,600

Complete Cost = $63,935,000

¢/kWhr = 1.42

3 Flashing Stages

1st Flash Pressure = 30 psia Condenser Pressure = 1.0 psia

2nd Flash Pressure = 20 psia Condenser Pressure = 1.5 psia

3rd Flash Pressure = 10 psia Condenser Pressure = 0.5 psia

Turbogenerator 1 = 3-23" Cost = $1,418,000
33 MW

*In turbine nomenclature, 6-23" means the turbine has 6 exhaust ends and has a last stage blade length of 23 in. 3-23" indicates the turbine has 3 exhaust ends and a 23 in. last stage blade length.

Table 1 (continued)

3 Flashing Stages (continued)

Turbogenerator 2 = 1-23" 33 MW — Cost = $900,000

Turbogenerator 3 = 2-23" 33 MW — Cost = $1,159,000

Condenser Cost = $130,220

Flash Tank Cost = $72,468

Well Cost = $9,623,250 Number of Wells = 38.5 (including reinjection + 5% penalty for non-condensables)

Pump Cost = $27,000

Total Plant Cost - $13,330,000

Complete Cost = $49,187,700

¢/kWhr = 1.12

4 Flashing Stages

1st Flash Pressure = 40 psia — Condenser Pressure = 1.0 psia

2nd Flash Pressure = 30 psia — Condenser Pressure = 0.5 psia

3rd Flash Pressure = 20 psia — Condenser Pressure = 0.5 psia

4th Flash Pressure = 10 psia — Condenser Pressure = 1.5 psia

Turbogenerator 1 = 3-23" 33 MW — Cost = $1,418,000

Turbogenerator 2 = 2-23" 33 MW — Cost - $1,159,000

Turbogenerator 3 = 1-23" 33 MW — Cost = $900,000

Condenser Cost = $47,290

Flash Tank Cost = $26,913

Pump Cost = $27,000

Well Cost = $9,376,500 Number of Wells 37.5 (including reinjection + 5% penalty for non-condensables)

Total Plant Cost = $12,954,700

Complete Cost = $47,803,000

¢/kWhr - 1.09

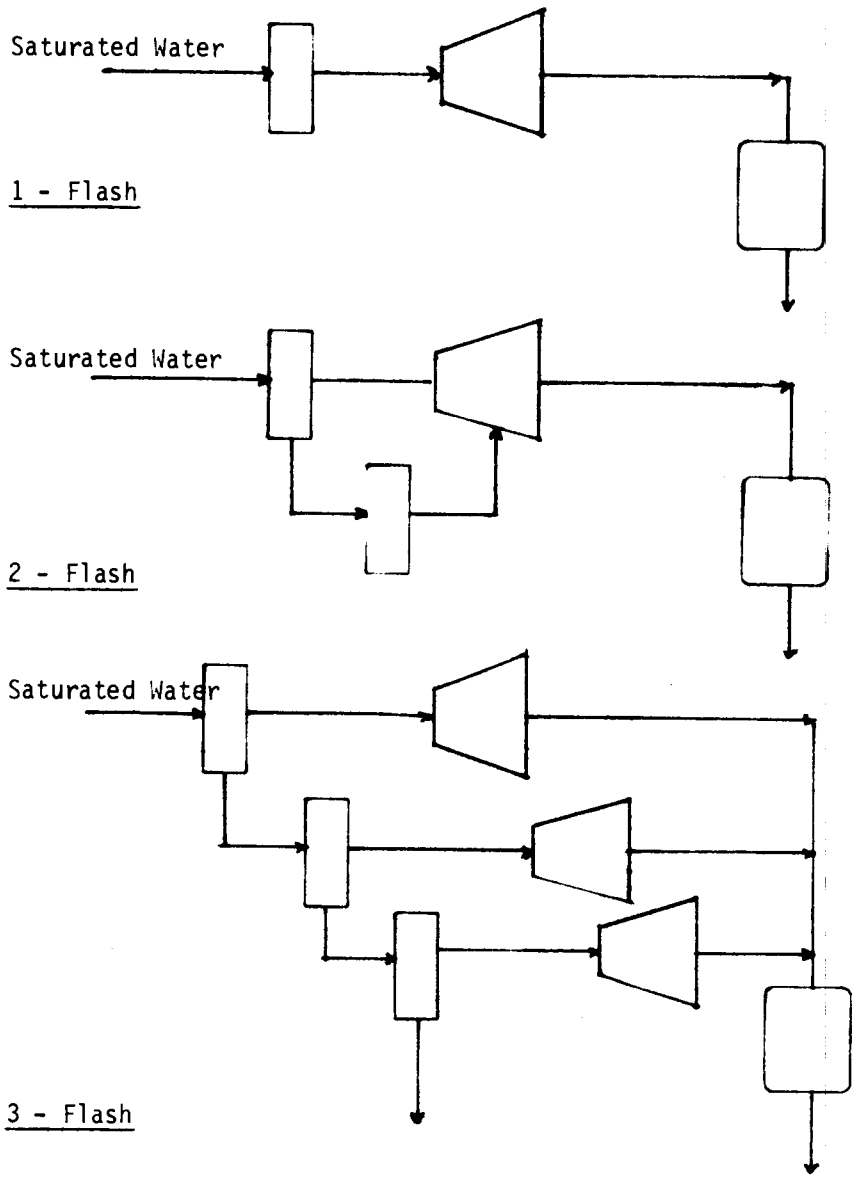

MASSACHUSETTS INSTITUTE OF TECHNOLOGY
SCHOOL OF CHEMICAL ENGINEERING PRACTICE
AT
OAK RIDGE NATIONAL LABORATORY

OPTIMAL DESIGN FOR 1, 2, AND 3 FLASHING STAGES

DATE	DRAWN BY	FILE NO.	FIG.
3-24-74	PLJ	CEPS-X-187	4

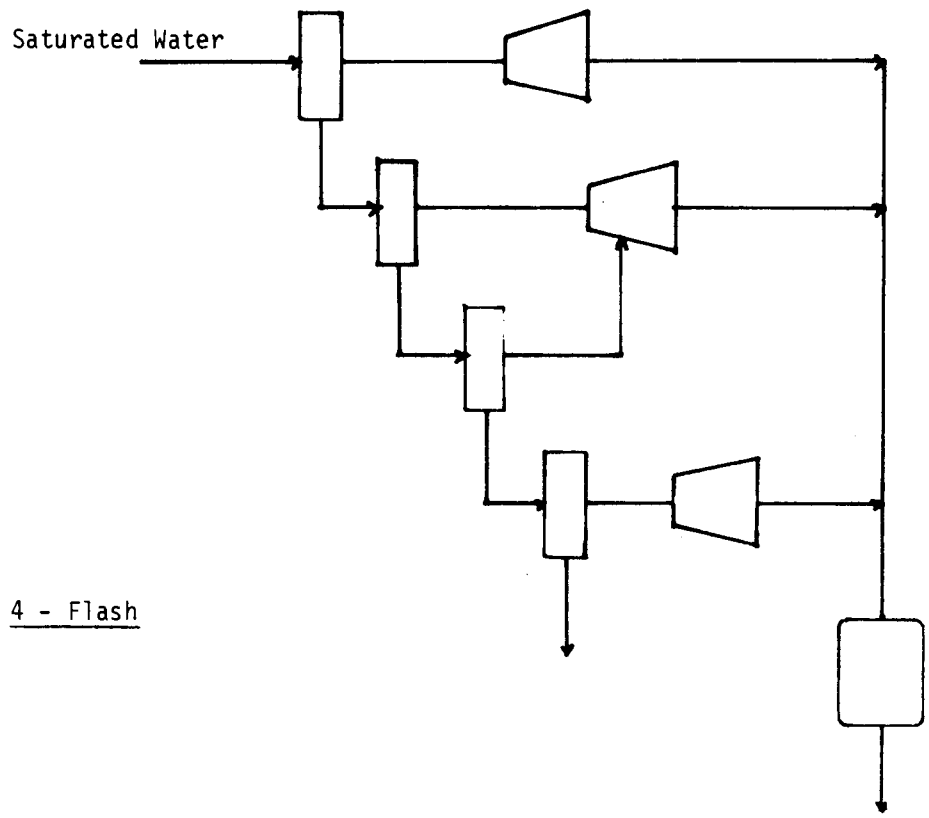

MASSACHUSETTS INSTITUTE OF TECHNOLOGY
SCHOOL OF CHEMICAL ENGINEERING PRACTICE
AT
OAK RIDGE NATIONAL LABORATORY

OPTIMAL DESIGN FOR 4 FLASHING STAGES

DATE	DRAWN BY	FILE NO.	FIG.
3-24-74	PLJ	CEPS-X-187	5

Table 2. Comparative Efficiencies for a 100 MW(electric) Power Plant

Working Fluid	Molecular Weight	T_c (°R)	P_c (psia)	Turbine		Pump	Condenser		Flow Rates				Net Power (watts/lb_m^w/hr)	Turbine Power Output (MW)	Pump Power Required (MW)	Relative Efficiency (%)	% Carnot Efficiency (%)
				T_{inlet} (°F)	P_{inlet} (psia)	$\bar{V}_{liq}$ (ft^3/lb_m)	T_{cond} (°F)	P_{cond} (psia)	Water[a] (10^7 lb_m^w/hr)	Wells[b]	Working Fluid (10^7 lb_m/hr)	Condenser Water (10^7 lb_m/hr)					
Freon-12	120.9	694	597	280	700	0.0122	70	84.9	1.59	28.2	2.78	16.9	6.28	115	15	45.5	62.7
Freon-13B1	148.9	613	575	280	1450	0.0105	70	214	1.19	21.2	5.65	20.1	8.38	153	53	60.7	64.0
Freon-22	86.5	665	722	280	835	0.0135	70	136	1.46	26.0	2.26	18.7	6.78	115	15	49.1	60.0
Propane	44.1	666	617	280	1000	0.033	70	125	1.45	25.8	1.32	19.4	6.85	127	27	49.6	59.1
1 Flashing Stage				228	20		102	1.0	3.16	56.2			3.32	100	~0	24.2	
2 Flashing Stages				250 193	30 10		116 116	1.5 1.5	2.69	47.7			3.92	100	~0	28.4	
3 Flashing Stages				250 228 193	30 20 10		102 116 80	1.0 1.5 0.5	2.17	38.5			4.85	33.3 33.3 33.3	~0	35.2	
4 Flashing Stages				267 250 228 193	40 30 20 10		102 80 80 116	1.0 0.5 0.5 1.5	2.11	37.5			4.98	33.3 33.3 33.3	~0	36.2	

[a]Water flow rate for flashing processes includes 5% penalty for noncondensables.

[b]Number of wells includes reinjection wells and therefore is twice the number required for the water flow rate.

$$\text{relative efficiency} = \frac{W_{net}/lb_m^w}{[T_0\Delta S - \Delta H]\Big|_{300°F,\ 67\ psia}^{50°F,\ 14.7\ psia}} \tag{11}$$

The Carnot efficiency was determined by,

$$\eta_c = -\frac{[T_0\Delta S - \Delta H]}{\Delta H}\Bigg|_{T_{Hw}^{in},\ 67\ psia}^{T_{Hw}^{out},\ 67\ psia} \tag{12}$$

The cycle efficiency was defined as

$$\eta = \frac{W_{net}}{Q_{HE}} \tag{13}$$

The percent of Carnot efficiency attained by a cycle was then found by

$$\%\ \text{of Carnot efficiency} = \frac{\eta}{\eta_c} \times 100 \tag{14}$$

Table 3 presents the cost of constructing a 100 MW plant using alternate working fluids to drive the turbines. Pump power requirements are provided on site and therefore, the turbines have ratings higher than 100 MW in order to have a net power of 100 MW. The cost calculation incorporates the 18% fixed charges and $800,000 operating expenses used in the cost calculation for the flashing schemes.

Table 3. Alternate Working Fluid Cycle Costs

	100 MW Plant	
Freon-13B1	Cost	Size
Heat exchangers	$2,340,000	$25 \times 55{,}000\ ft^2$
-pumps	$3,870,000	7.12×10^4 hp
-motors	$2,290,000	7.12×10^4 hp
153 MW turbine	$3,550,000	
Condensers	$1,430,000	$24 \times 30{,}000\ ft^2$
-pumps	$ 199,000	4,900 hp
-motors	$ 157,000	4,900 hp
Wells	$5,300,000	21.2 (including reinjection)

Table 3 (continued)

Freon-13B1 (continued)	Cost	Size
Total plant cost = $19,136,000		
Complete cost = $70,610,000		
¢/kWhr = 1.54		
Propane		
Heat exchangers	$ 510,000	6 × 50,000 ft^2
-pumps	$1,520,000	3.7 × 10^4 hp
-motors	$1,200,000	3.7 × 10^4 hp
127 MW turbine	$2,770,000	
Condensers	$1,390,000	23 × 30,000 ft^2
-pump	$ 192,000	4,700 hp
-motors	$ 152,000	4,700 hp
Wells	$6,460,000	25.8 (including reinjection)
Total plant cost = $14,194,000		
Complete cost = $52,375,000		
¢/kWhr = 1.17		
Freon-12		
Heat exchangers	$ 428,000	6 × 42,000 ft^2
-pumps	$ 830,000	2.0 × 10^4 hp
-motors	$ 646,000	2.0 × 10^4 hp
115 MW turbine	$2,770,000	
Condensers	$1,200,000	20 × 30,000 ft^2
-pumps	$ 167,000	4,100 hp
-motors	$ 132,000	4,100 hp
Wells	$7,060,000	28.2 (including reinjection)
Total plant cost = $13,233,000		
Complete cost = $48,830,000		
¢/kWhr = 1.09		

Table 3 (continued)

Freon-22	Cost	Size
Heat exchangers	$ 500,000	6 × 52,000 ft^2
-pumps	$ 845,000	2.1 × 10^4 hp
-motors	$ 670,000	2.1 × 10^4 hp
115 MW turbine	$2,580,000	
Condensers	$1,300,000	22 × 30,000 ft^2
-pumps	$ 179,000	4,400 hp
-motors	$ 142,000	4,400 hp
Wells	$6,500,000	26.0 (including reinjection)
Total plant cost = $12,716,000		
Complete cost - $46,922,000		
¢/kWhr = 1.06		

5. DISCUSSION OF RESULTS

5.1 Flashing Schemes

A graph of ¢/kWhr vs number of flashes is shown in Fig. 6. As can be seen from the graph, the cost/kWhr vs number of flashes decreases almost linearly for the first three flashes and begins to plateau from the third to the fourth flash. From these results, it appears that the cost is leveling off. Although it can be assumed that the cost will increase beyond a certain number of flashes, the precise point where this will occur was not determined.

Unfortunately, because of the difficulties encountered in plotting over two dimensions, the response surfaces of the 3- and 4-flash cases could not be shown. Figure 7 shows relative plant cost vs flashing pressure for the single flash case for a condenser pressure of 1.0 psia, which was the optimum condenser pressure.

Figure 8 shows a contour map of the condenser pressures vs the ¢/kWhr for the two flashing stage case at the optimum flash pressures of 30 and 10 psia. The map shows a valley which contains the minimum. At the low condenser pressures, turbine sizes become prohibitively large and the costs increase rapidly.

The results of the 3- and 4-flashing stage cases definitely show that flashing above 40 psia is unwarrented. Furthermore, for each flashing pressure, an optimum condenser pressure exists, i.e., the combinations

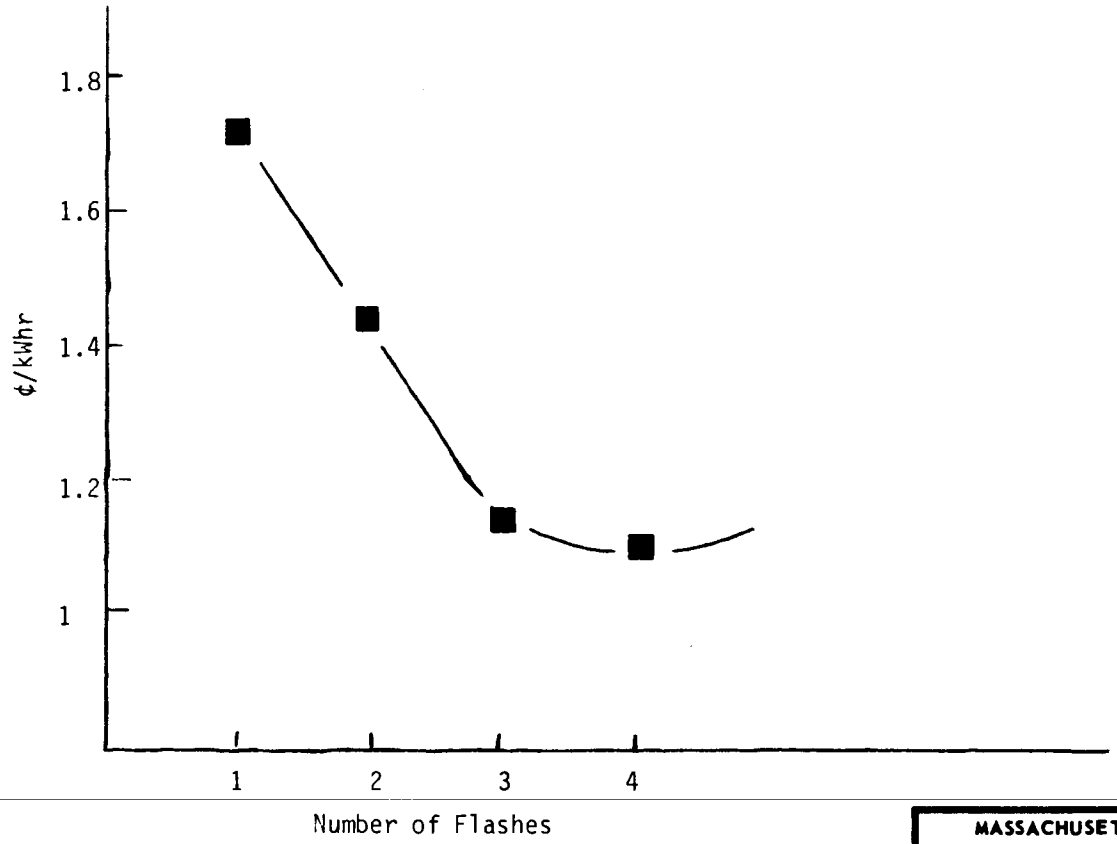

MASSACHUSETTS INSTITUTE OF TECHNOLOGY
SCHOOL OF CHEMICAL ENGINEERING PRACTICE
AT
OAK RIDGE NATIONAL LABORATORY

COST PER kWhr VS NUMBER OF FLASHES

DATE	DRAWN BY	FILE NO.	FIG.
3-24-74	PLJ	CEPS-X-187	6

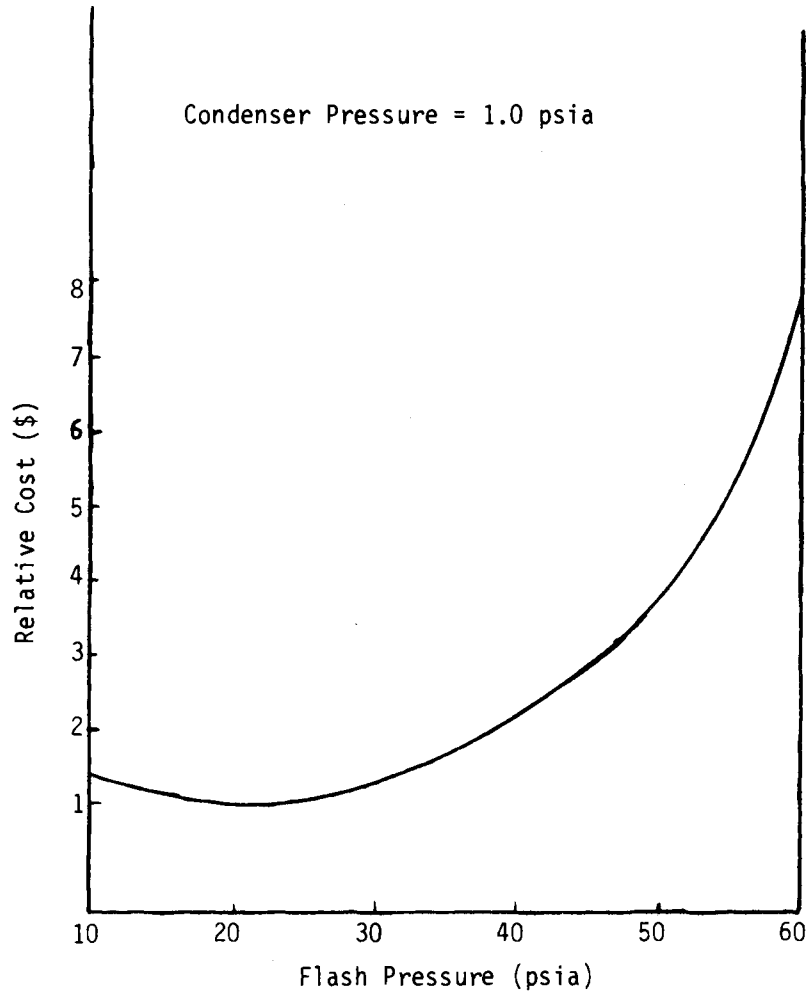

Computed without cost of utilities, re-injection wells or non-condensables penalty (5%)

MASSACHUSETTS INSTITUTE OF TECHNOLOGY SCHOOL OF CHEMICAL ENGINEERING PRACTICE AT OAK RIDGE NATIONAL LABORATORY			
COST VS FLASH PRESSURE FOR ONE FLASHING STAGE			
DATE 3-24-74	DRAWN BY PLJ	FILE NO. CEPS-X-187	FIG. 7

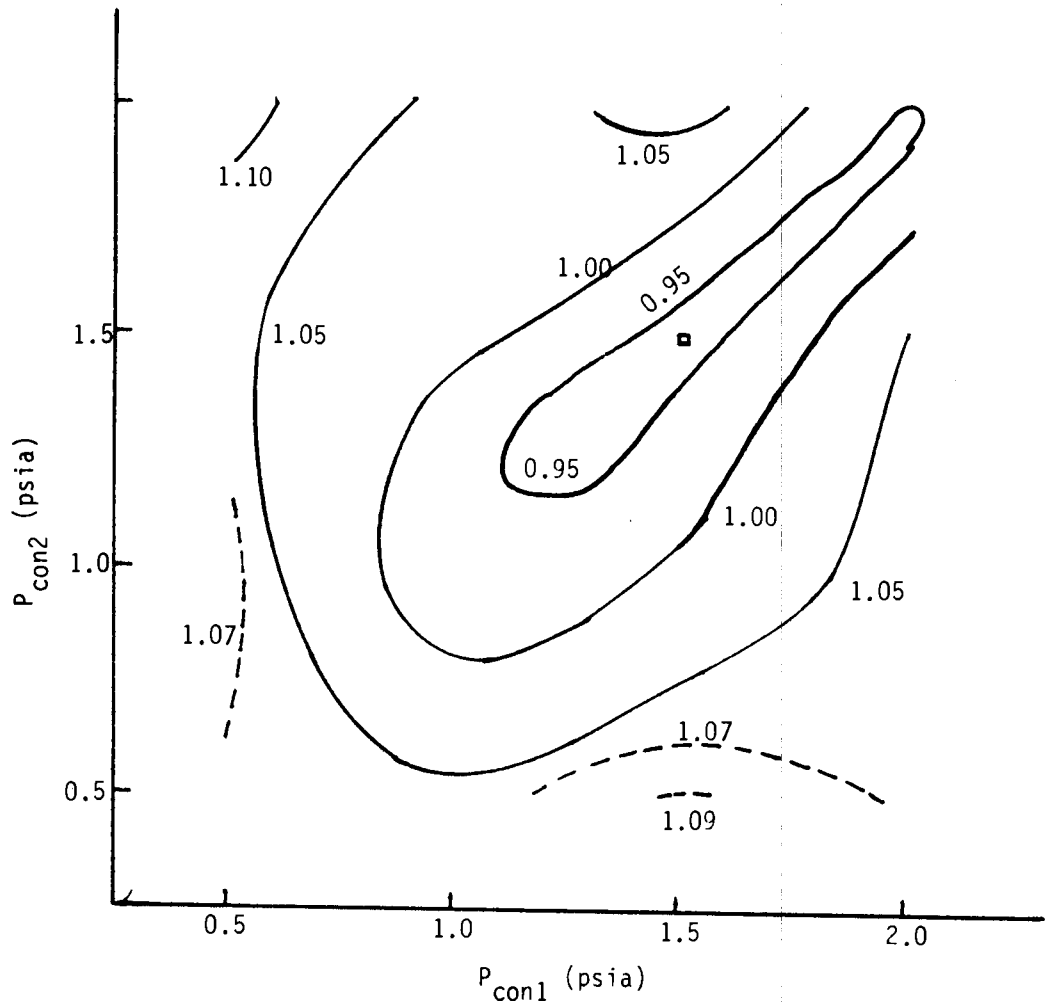

Contours: ¢/kWhr
□= minimum = 0.93
Computed without cost of utilities, re-injection wells, or non-condensables penalty (5%)

MASSACHUSETTS INSTITUTE OF TECHNOLOGY SCHOOL OF CHEMICAL ENGINEERING PRACTICE AT OAK RIDGE NATIONAL LABORATORY			
RESPONSE SURFACE FOR A 2-FLASH AT 30 AND 10 PSIA			
DATE 3-24-74	DRAWN BY PLJ	FILE NO. CEPS-X-187	FIG. 8

30 psia - 1.0 psia
20 psia - 1.5 psia
10 psia - 0.5 psia

appear most frequently.

The optimums of the 3- and 4-flashing stage calculations also indicate that a few turbine routing schemes are far superior to others. For these two cases, the optimum turbine arrangements were identical, i.e., 3-23", 1-23", and 2-23". The worst 4-flash case was when three flashes were routed into the same turbine, and the other flash into a different turbine. Since the flow from the three flashes together required over six exhaust ends, an additional turbine was required. The overall cost for this arrangement was more expensive than the optimum result of the single flash.

For the 4-flash design, this is not the rigorous optimum but is thought to be very close to the optimum. Due to the combinatorial problems encountered when working with a large number of flashes, only the 4-flash combinations (50,40,30,20), (40,30,20,10), (35,25,15,10), (35,25,20,15), (35,25,20, 8), (35,25,15,8), and (35,20,15,8) were examined. Of these combinations, the optimum occurred at (40,30,20,10). Because the optimum for each of the first 3-flash plants happened to be on a pressure multiple of ten, i.e., [(30,20,10), (30,10), (20)], it was assumed that the (40,30,20,10) case was very close to the rigorous optimum. The results for the 1-, 2-, and 3-flashing stage cases showed that of the 4 condenser pressures being examined, 2.0, 1.5, 1.0, and 0.5 psia, only 1.5, 1.0, and 0.5 psia appeared in the optimal designs. Thus, in examining the 4-flash case, only these three condenser pressures were considered. This in turn means that only three different turbogenerator arrangements were considered. Although clearly not rigorous, it is thought because of the seven-tenths power law on the turbogenerator cost in this range of Megawatt turbines and the results of the previous flashing optimum, that this is a reasonable assumption.

5.2 Alternate Working Fluid Cycles

The working fluid cycles were designed with the criteria of maximizing the amount of heat transferred from the ground water stream to the working fluid cycle with the constraints that there be no condensation in the turbine and the maximum temperature of the working fluid be 280°F. Comparing the thermodynamic efficiencies and net power per pound of hot water shown in Table 2, Freon-13B1 is the best working fluid from an efficiency standpoint. Freon-13B1 requires the least amount of hot water (and therefore fewest wells) to produce 100 MW(electric) of power. For the fluids considered Freon-12 had the lowest thermodynamic efficiency.

However, the cost of producing power using each of the fluids shows a very different trend. Tables 3 and 4 show Freon-13B1 has the highest cost per kilowatt-hour and Freon-22 the lowest. The lower well cost for Freon-13B1 does not offset the much greater capital costs of the turbine, heat exchanger, and feed pump. The high turbine and pump costs are due to the large pump work required to obtain the operating pressure of 1450 psia. This high

Table 4. Summary of Cost Analysis Results

Plant Type	¢/kWhr
Freon-22*	1.06
4-Flash**	1.09
Freon-12*	1.09
3-Flash**	1.12
Propane*	1.17
2-Flash**	1.42
Freon-13B1	1.54
1-Flash**	1.73

*Alternative working fluid cycles optimized with respect to thermodynamic efficiency only.

**Flashing schemes optimized with respect to overall costs.

operating pressure was required in order to minimize the amount of vapor superheat at the turbine exhaust. Such high operating pressures are characteristic of supercritical cycles employing low critical temperature fluids. The high heat exchanger cost is due to the low thermal conductivity, a low ΔT, and poor heat transfer characteristics relative to the other fluids [i.e., the $\overline{\gamma}$ of Freon-13B1 is the lowest, primarily due to its high molecular weight (148.9)]. In comparison, the lowest cost per kilowatt-hour fluid, Freon-22 (1.06¢/kWhr) has greater well requirements than Freon-13B1 (26 vs 21.2), but the capital cost of process equipment is much less, particularly the cycle pump and motor. Comparison of Freons-12 and -22 with propane shows a similar trend; propane has a higher efficiency (lower well cost) but requires a greater capital equipment expenditure. In addition, the supercritical Rankine cycle used is not necessarily the optimum cycle for each working fluid. Future studies should optimize the operating conditions of the proposed supercritical cycle as well as examine alternative cycles such as subcritical Rankine cycles. For supercritical Rankine cycles applied to this energy source, the reduced pressure difference across the turbine and the heat capacity of the working fluid are more important than improved thermodynamic efficiency (fewer wells) in influencing the overall economics.

5.3 Comparison of Results

Table 4 indicates that for this geothermal source, supercritical Rankine cycles using the fluids investigated in this study are competitive with direct flashing. Alternate fluid cycles might be even more economically attractive if (1) the feed pump motor could be eliminated by connecting the

feed pump directly to the turbine shaft and (2) turbine costs are reduced as multiple units are produced. Also, increased well costs would affect the relative importance of efficient utilization of the energy source (thermodynamic efficiency) versus reduced critical pressure differences, heat capacity, etc. in working fluid selection.

6. CONCLUSIONS

1. For a 300°F saturated water geothermal source, the cost of a 100 MW(electric) plant decreases from 1.73 to 1.13¢/kWhr with the number of flashing stages until 3 flashes are reached, after which it begins to plateau to 1.09¢/kWhr with 4 flashes.

2. For this energy source, with the state of current technology and current prices, alternate fluid cycles are as economically attractive as multiple stage flashing, e.g., Freon-22 - 1.06¢/kWhr versus 4-flashing stages - 1.09¢/kWhr.

3. The relative importance of several thermodynamic criteria have been established in designing alternate working fluid cycles both from the standpoint of cost and efficiency in utilizing the energy source.

7. RECOMMENDATIONS

1. Heat transfer coefficients and thermodynamic property data in the supercritical region for the alternate working fluids investigated be determined experimentally.

2. The feasibility of connecting the turbine shaft directly to the cycle pump and eliminating the cycle pump motor be investigated.

3. A detailed cost optimization for each working fluid should be considered to establish plant operating conditions.

8. ACKNOWLEDGMENTS

We would like to thank L. C. Fuller, S. L. Milora, and R. N. Lyon for their help and advice.

9. APPENDIX

9.1 Alternate Working Fluid Cycle Calculations

9.1.1 Construction of Alternate Working Fluid Cycles

The construction of the supercritical Rankine cycle on a log P-H diagram (Fig. 2) starts with a line drawn in the two phase region at 70°F corresponding to the condensation temperature (line from point 4 to 1). The condenser temperature was set at 70°F to allow a minimum temperature difference in the condenser of 10°F (cooling water inlet = 50°F; outlet = 60°F).

The outlet condition of an ideal turbine was specified as saturated vapor at 70°F, the outlet heat exchanger conditions can be obtained since the entropy (isentropic turbine) is known and the temperature is fixed at 280°F to allow a 20°F ΔT at the hot end of the heat exchanger (point 3).

The pressure drop across the heat exchanger was assumed to be negligible and therefore, the pressure out of the pump, P_2, was the same as the pressure at point 3. The enthalpy at the outlet of the pump was calculated by an adiabatic first law balance since the initial and final pressures are specified as P_1 (pressure of saturated liquid at 70°F) and P_2.

By the first law:

$$\dot{W}_p = (H_p^{in} - H_p^{out})\, N_{WF} \,. \tag{15}$$

By definition, the reversible pump work can be expressed as:

$$\dot{W}_p \equiv -\int_{P_1}^{P_2} \underline{V}_{WF}\, dP\, N_{WF} \tag{16}$$

thus,

$$H_p^{out} - H_p^{in} = \int_{P_1}^{P_2} \underline{V}_{WF}\, dP \tag{17}$$

where

H_p^{in} = enthalpy of saturated liquid at 70°F.

Since $\underline{V}_{WF}$ is approximately constant in the temperature and pressure ranges of the compression (approximately 70–85°F and 110–1000 psia) the integral may be approximated as:

$$\int_{P_1}^{P_2} \underline{V}_{WF} dP \cong \underline{V}_{WF}\, (P_2 - P_1) \tag{18}$$

Having specified both the inlet and outlet conditions of the heat exchanger, a line connecting point 2 to point 3 was drawn to complete the cycle. The actual turbine work (η = 0.85) can also be calculated by a first law balance.

$$\dot{W}_T = 0.85\ (H_T^{in} - H_{T\ (IDEAL)}^{out})N_{WF} \tag{19}$$

and the actual enthalpy of the vapor leaving the turbine is

$$H_T^{out} = H_T^{in} - 0.85\ (H_T^{in} - H_{T\ (IDEAL)}^{out})\ . \tag{20}$$

For Freon-22 at the condenser temperature of 70°F, the pressure P_1 is 136 psia, the enthalpy is 110.4 Btu/lb_m, and the entropy of the saturated vapor is 0.215 Btu/lb_m°R. Since the expansion from the turbine is at constant entropy, the outlet conditions of the heat exchanger are found because the temperature (280°F) and the entropy (0.215 Btu/lb_m°R) are specified. The pressure is 835 psia and enthalpy is 130.8 Btu/lb_m at the outlet of the heat exchanger.

Assuming that there is a negligible pressure drop across the heat exchanger the outlet pump pressure is taken to be equal to 835 psia. Therefore, the enthalpy of the working fluid out of the pump (75% efficient) is

$$H_p^{out} = H_p^{in} + \frac{V_{WF}}{0.75}\ (P_2 - P_1) \tag{21}$$

$$= 30.1\ \frac{Btu}{lb_m} + \frac{0.0135}{0.75}\ (835 - 136)\ \frac{ft^3\ psia}{lb_m} \times 0.185\ \frac{Btu}{ft^3\ psia}$$

$$= 32.4\ Btu/lb_m$$

Therefore, the pressure and enthalpy are known at both ends of the heat exchanger.

The actual enthalpy of the vapor leaving the turbine is

$$H_T^{out} = 130.8 - 0.85\ (130.8 - 110.4)$$

$$= 113.5\ Btu/lb_m$$

and, thus the cycle can be constructed (Fig. 9).

9.1.2 Construction of a T-Q Diagram

From the log P-H diagram the line representing the change in enthalpy of the working fluid in the heat exchanger, enthalpy as a function of temperature along the isobar was obtained. If there were no data available in the supercritical liquid region, reduced property tables were used to

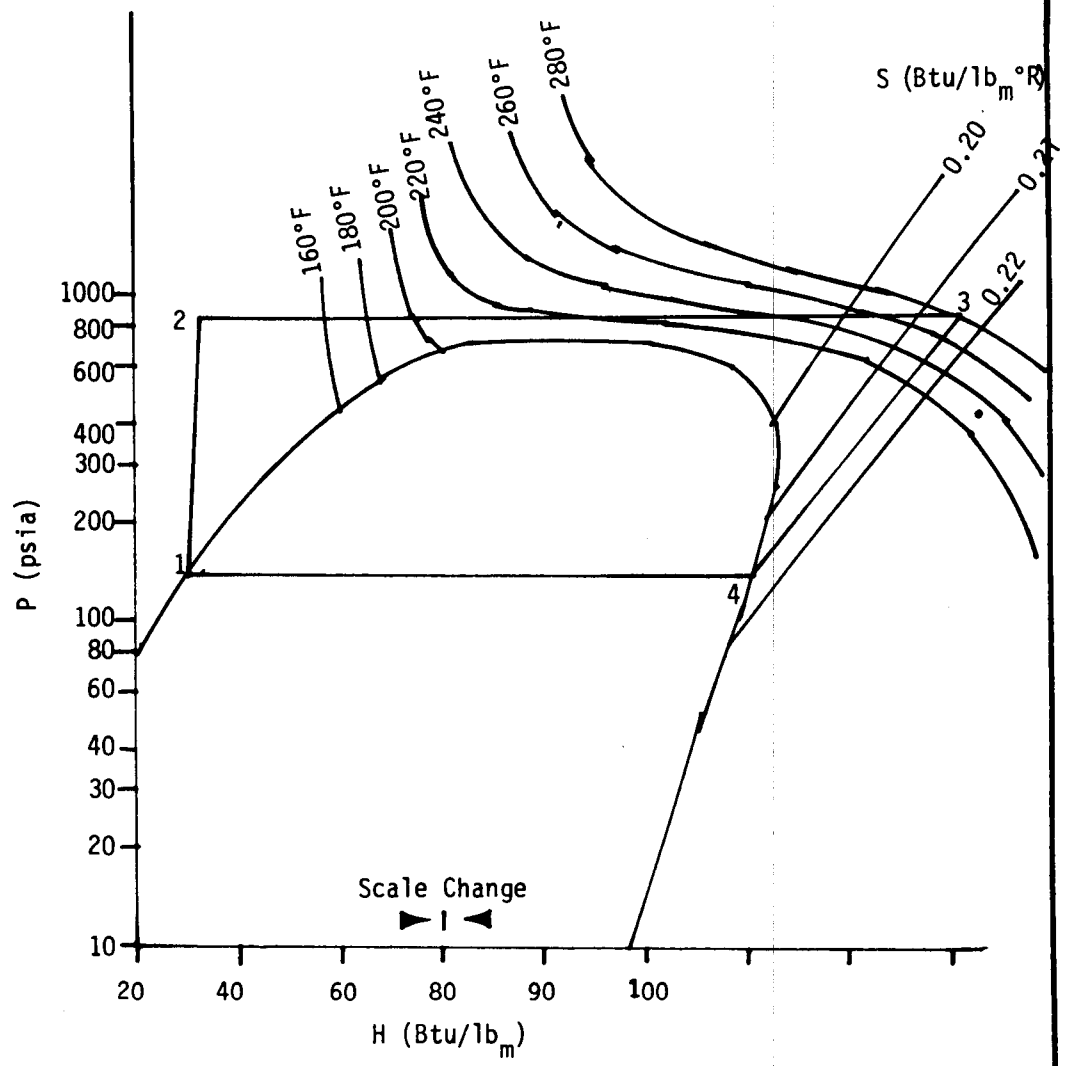

MASSACHUSETTS INSTITUTE OF TECHNOLOGY
SCHOOL OF CHEMICAL ENGINEERING PRACTICE
AT
OAK RIDGE NATIONAL LABORATORY

WORK CYCLE FOR FREON-22

DATE	DRAWN BY	FILE NO.	FIG.
3-24-74	ASYH	CEPS-X-187	9

calculate enthalpy as a function of temperature at a given pressure (11). The enthalpy at a given temperature in the heat exchanger was normalized with respect to the total enthalpy change in the heat exchanger as:

$$\frac{\Delta H \Big|_{T_{HWF}^{in}}^{T}}{\Delta H \Big|_{T_{HWF}^{in}}^{T_{HWF}^{out}}} = \frac{Q}{Q^{HE}} \tag{22}$$

The values of temperature along the heat exchanger as a function of Q/Q^{HE} were then plotted (Fig. 3). Using a minimum temperature difference of 10°F between the working fluid and hot water, the water temperature profile may be drawn using a starting point at "b" ($Q/Q^{HE} = 1$, T = 300°F). A straight line was used for the water temperature profile because the heat capacity of water is approximately constant over the temperature range of 100 to 300°F. From this plot the final temperature of water may be read at point "a".

Since no experimental data exist for Freon-22 in the temperature range of 100 to 150°F and pressure of 835 psia, reduced tables were used from Hougen and Watson (11) to predict the enthalpy as a function of temperature.

The critical properties were taken from Reid and Sherwood (20).

Molecular Weight	Z_c	T_c	P_c
86.48	0.264	664.8°R	721.9 psia

at

$T = 100°F$

$P = 835$ psia

$T_r = \frac{T}{T_c} = 0.842$

$P_r = \frac{P}{P_c} = 1.157$

$H^* = 121.9$ Btu/lb_m from the ASHRAE table 8, p. 61 of (1), enthalpy at 100°F, 3 psia (approximately ideal gas state).

from the reduced tables:

$$\frac{H^* - H}{T_c} = 11.05 \text{ Btu/lb-mole°R}$$

$$H = 121.9 \frac{\text{Btu}}{\text{lb}_m} - \frac{(664.8)(11.05)}{86.48} \frac{\text{Btu}}{\text{lb}_m}$$

$$= 37.00 \text{ Btu/lb}_m$$

Similar values were calculated at 120 and 140°F and from the log P-H diagram the remaining enthalpies as a function of temperature were found and are presented in Table 5. The reduced enthalpies were calculated using Eq. (22).

$$\frac{Q}{Q^{HE}} = \frac{H - 32.45}{130.8 - 32.45}$$

Table 5. Heat Exchanger Calculations

T (°F)	H (Btu/lb$_m$)	Q/Q^{HE}
85	32.45	0.0
100	37.00	0.046
120	43.50	0.112
140	50.29	0.181
160	57.0	0.250
180	65.0	0.331
200	74.0	0.422
220	93.0	0.616
240	114.0	0.829
260	123.5	0.926
280	130.8	1.00

These values are plotted in Fig. 10 and the water line drawn with the point "b" (T = 300°F, Q/Q^{HE} = 1) and a minimum ΔT of 10°F. The final temperature of the water was read from point "a" to be 150°F.

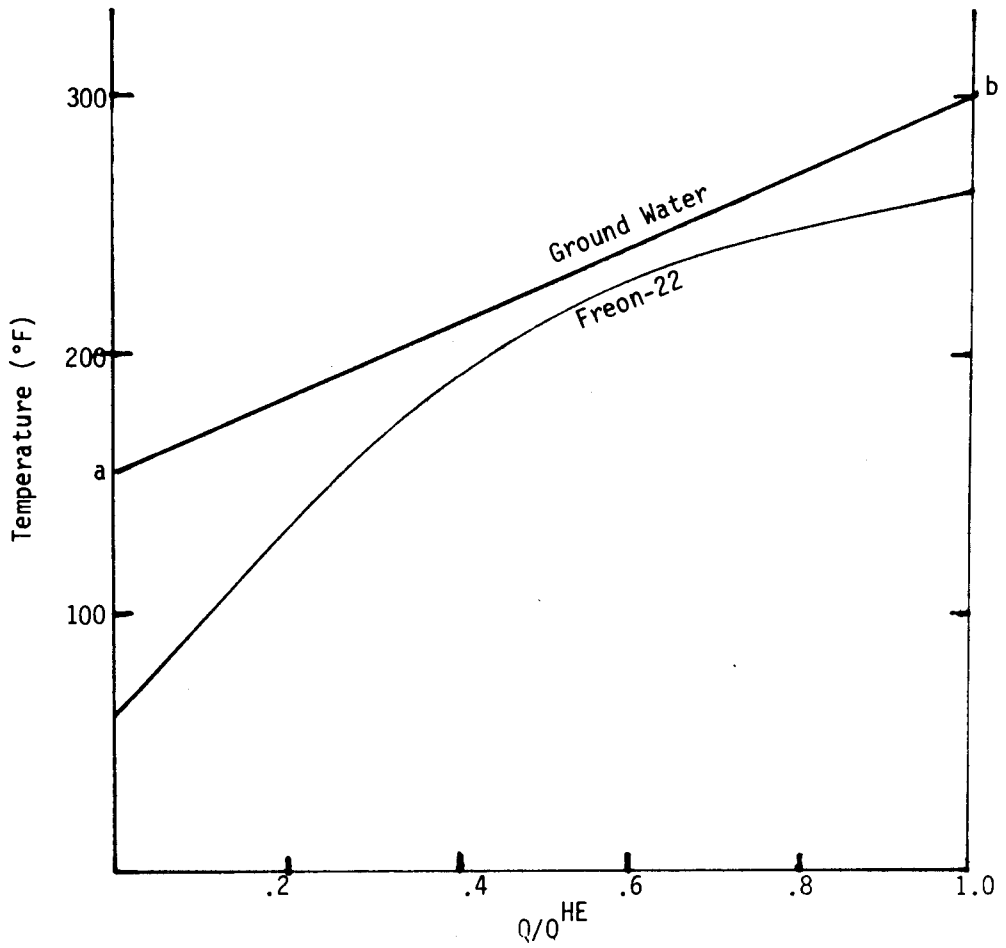

MASSACHUSETTS INSTITUTE OF TECHNOLOGY
SCHOOL OF CHEMICAL ENGINEERING PRACTICE
AT
OAK RIDGE NATIONAL LABORATORY

T-Q DIAGRAM FOR FREON-22

DATE	DRAWN BY	FILE NO.	FIG.
3-24-74	Andy	CEPS-X-187	10

9.1.3 Flow Rates in the Heat Exchanger

By a first law balance around the heat exchanger:

$$Q_{WF}^{HE} = -Q_{W}^{HE} \tag{23}$$

from a heat balance around the water side of the exchanger.

$$Q_{W}^{HE} = (H_{HW}^{out} - H_{HW}^{in})N_{W} \tag{24}$$

similarly for the working fluid

$$Q_{WF}^{HE} = (H_{HWF}^{out} - H_{HWF}^{in})N_{WF} \tag{25}$$

The water pressure was assumed to be constant at 67 psia and therefore, fixing the temperature set the enthalpy of the water. The steam tables (13) were then used to find the enthalpy.

For the working fluid H_{HWF}^{out} and H_{HWF}^{in} were calculated from the log P-H diagram and represent the total enthalpy change of the working fluid in the heat exchanger. The working fluid flow rate was calculated using as a basis a water flow rate of 1 lb_m^w/hr and assuming an adiabatic heat exchanger.

$$\frac{N_{WF}}{lb_m^w/hr} = \frac{H_{HW}^{in} - H_{HW}^{out}}{H_{HWF}^{out} - H_{HWF}^{in}} \; \frac{lb_m/hr}{lb_m^w/hr} \; . \tag{26}$$

Using a first law balance around the water side of the heat exchanger

$$Q_{W}^{HE} = (H_{HW}^{out} - H_{HW}^{in})N_{W} \tag{24}$$

from the steam tables (13)

$$H_{HW}^{out} = 117.95 \text{ Btu/lb}_m$$

$$H_{HW}^{in} = 269.61 \text{ Btu/lb}_m$$

using $N_W = 1$ lb_m/hr as a basis

$$Q_{W}^{HE} = -151.66 \text{ Btu/hr} \; .$$

Since the overall exchanger is assumed adiabatic,

$$Q_{W}^{HE} = -Q_{WF}^{HE} = 151.66 \text{ Btu/hr} = (H_{HWF}^{out} - H_{HWF}^{in})N_{WF} \tag{26}$$

For Freon-22,

$$H_{HWF}^{out} = 130.8 \text{ Btu/lb}_m$$

$$H_{HWF}^{in} = 32.45 \text{ Btu/lb}_m$$

the working fluid flow rate can be calculated

$$\frac{N_{WF}}{\text{lb}_m^w/\text{hr}} = \frac{151.66}{98.35} = 1.54 \frac{\text{lb}_m/\text{hr}}{\text{lb}_m^w/\text{hr}}$$

9.1.4 Net Power Calculation

The power output from the turbine was obtained from a first law balance around the turbine (see Fig. 11).

$$\dot{W}_T = (H_T^{in} - H_T^{out})N_{WF} \tag{27}$$

$$\dot{W}_T = .85 \times (H_T^{in} - H_{T\,(IDEAL)}^{out})N_{WF} \tag{19}$$

The ideal reversible pump work was calculated by

$$\dot{W}_P = \left[\int_{P_1}^{P_2} \underline{V}_{WF}\, dP\right] N_{WF} \tag{16}$$

Assuming a 75% pump efficiency and a constant $\underline{V}_{WF}$ (equal to specific volume of saturated liquid),

$$\dot{W}_P = \frac{\underline{V}_{WF}}{.75} (P_2 - P_1)N_{WF} \tag{28}$$

thus, the net power was found by,

$$\dot{W}_{net} = 0.85\ (H_T^{in} - H_{T\,(IDEAL)}^{out})N_{WF} - \frac{\underline{V}_{WF}}{0.75} (P_2 - P_1)N_{WF} \tag{29}$$

For Freon-22 the power output from the turbine is calculated from Eq. (19)

$$\dot{W}_T = .85\ (130.8 - 110.4)\ 1.54 \text{ Btu/hr}$$

$$= 26.7 \frac{\text{Btu/hr}}{\text{lb}_m^w/\text{hr}} = 7.83 \text{ watts/lb}_m^w/\text{hr}$$

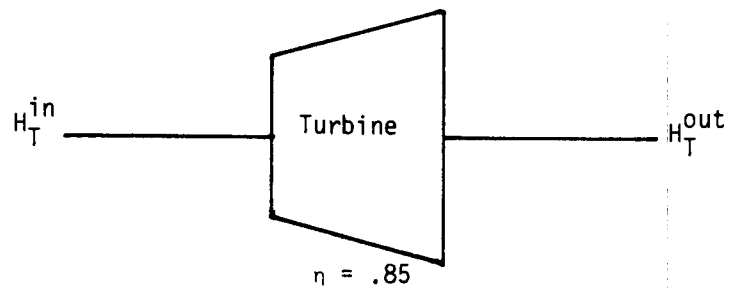

$$\dot{W}_T = 0.85\ (H_T^{in} - H_T^{out}{}_{(IDEAL)})N_{WF} \tag{19}$$

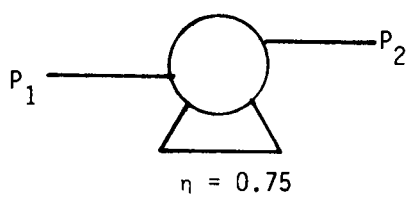

$$\dot{W}_P = \frac{V_{WF}}{0.75}\ (P_2 - P_1)N_{WF} \tag{28}$$

$$\dot{W}_{net} = 0.85(H_T^{in} - H_T^{out}{}_{(IDEAL)})N_{WF} - \frac{V_{WF}}{0.75}\ (P_2 - P_1)N_{WF} \tag{29}$$

MASSACHUSETTS INSTITUTE OF TECHNOLOGY SCHOOL OF CHEMICAL ENGINEERING PRACTICE AT OAK RIDGE NATIONAL LABORATORY			
NET WORK			
DATE 3-24-74	DRAWN BY	FILE NO. CEPS-X-187	FIG. 11

The work requirement for the feed pump can be calculated using Eq. (28)

$$\dot{W}_p = \frac{.0135}{.75}(835 - 136)(0.185)\ 1.54\ \text{Btu/hr}$$

$$= 3.58\ \frac{\text{Btu/hr}}{\text{lb}_m^w/\text{hr}} = 1.05\ \text{watts/lb}_m^w/\text{hr}$$

Therefore from Eq. (29) the net work is given by

$$\dot{W}_{net} = 7.83 - 1.05 = 6.78\ \frac{\text{watts}}{\text{lb}_m^w/\text{hr}}\ .$$

The cycle efficiency can be calculated by determining the availability of the system ΔB relative to ambient conditions at 50°F.

$$\frac{\Delta B}{\text{lb}_m^w/\text{hr}} = \left[T_0\ \Delta S - \Delta H\right]_{300°F,\ 67\ \text{psia}}^{50°F,\ 14.7\ \text{psia}}$$

$$= [(510°R)(.03607 - .43720) - (18.06 - 269.73)]$$

$$= 47.1\ \text{Btu/hr} = 13.8\ \text{watts/lb}_m^w/\text{hr}$$

The relative efficiency can then be expressed as the ratio:

$$\text{eff.} = \frac{\dot{W}_{net}}{\Delta B} = \frac{6.78}{13.8} = 49.1\%$$

The Carnot efficiency is expressed as

$$\eta = \frac{\dot{W}_{net}}{Q^{HE}} = \frac{6.78}{(.293)(151.66)} = .153$$

while the ideal Carnot efficiency for a reversible system is,

$$\eta_c = \frac{-[T_0\ \Delta S - \Delta H]}{\Delta H}\Bigg|_{T = 300°F,\ 67\ \text{psia}}^{T = 150°F,\ 67\ \text{psia}}$$

$$= \frac{-[(510°R)(.21504 - .43720) - (117.95 - 269.73)]}{117.95 - 269.61}$$

$$= .254$$

Therefore this cycle operates at $\frac{.153}{.254} = 60\%$ of the Carnot efficiency.

9.1.5 Cooling Water Flow Rate

The condenser cooling water flow rate can be calculated on the basis of 1 lb_m^w/hr. The $\Delta H_{WF} N_{WF}$ for Freon-22 at 136 psia is (113.5 – 30.1) 1.54 = 128.4 Btu/hr/lb_m^w/hr. The cooling water enters at 50°F and is returned at 60°F for a ΔH_{CW} = 10 Btu/lb_m. For an adiabatic condenser $Q_W^{con} = \Delta H_{CW} N_{CW} = \Delta H_{WF} N_{WF}$ = 128.4 Btu/hr/lb_m^w/hr.

$$N_{CW} = 12.8 \frac{lb_m/hr}{lb_m^w/hr}$$

9.2 Computer Listings

The following subroutines were used in evaluating various flashing schemes. The thermodynamic properties of steam were available as ORCENT subroutines (2).

```
//SLM1 JOB (14021),'BIN M JENSEN',CLASS=A
//STEP EXEC FORTHCLG,PARM.FORT='XREF',REGION.GO=180K
//FORT.SYSIN DD *
      IMPLICIT REAL*8(A-H,O-Z)
      DIMENSION P(10)
      READ(50,1) XMWW
 1    FORMAT(1X,F10.2)
      XMW=XMWW*3413000.
      P(1)=35.
      P(2)=25.
      P(3)=20.
      P(4)=15.
      NUMB=4
      CALL DREK(P,XMW,XMWW,NUMB)
      STOP
      END
      SUBROUTINE DREK(P,XMW,XMWW,NUMB)
C     THIS SUBROUTINE IS CALLED BY SUPPLYING A VECTOR OF FLASHING PRESS-
C     URES, THE NUMBER OF FLASHES AND THE MEGAWATT RATING.  WHEN THIS RO
C     UTINE IS CALLED, ALL VARIABLES A-H AND O-Z SHOULD BE DECLARED AS
C     REAL*8.
C
C     NOMENCLATURE****  P-VECTOR OF FLASHING PRESSURES IN PSIA,H-ENTERI
C     NG LIQUID ENTHALPY,S-VAPOR ENTROPY ENTERING THE TURBINE,PCON-COND
C     ENSER PRESSURE,AM-THE LIQUID FRACTION OF THE FLASH,V-SPECIFIC VOL
C     OF THE STEAM ENTERING THE TURBINE,TO-THE TEMPERATURE OF THE LIQUID
C     AFTER THE FLASH,HQ-ENTHALPY OF THE STEAM EXITING THE TURBINE,DH-
C     THE DELTA H THROUGH THE TURBINE,HCON-ENTHALPY AT THE CONDENSER,
C     VCON-SPECIFIC VOLUME AT THE CONDENSER,SFR-STEAM FLOW RATE,VDX-VOL
C     FLOW RATE AT THE ENTRANCE,Z-VAPOR FRACTION OF THE FLASH,VDC-SPEC
C     VOLUME AT THE CONDENSER PRESSURE,P9 IS THE ENTERING PRESSURE OF
C     THE SAT WATER FEED-THIS SHOULD PROBABLY BE CHANGED TO AN INPUT
C     VALUE,POW-POWER DEVELOPED BY THE STEAM
```

```
C
C
C     THE FOLLOWING SUBROUTINES WERE USED FROM ORCENT
C     TSAT- RETURNS SATURATION TEMP GIVEN PRESSURE
C     HLIQ-GIVEN LIQ TEMP THIS COMPUTES ENTHALPY
C     PROPPH- GIVEN P+H THIS COMPUTES STEAM PROPERTIES
C     PROPPS-GIVEN P+S THIS COMPUTES STEAM PROPERTIES
C     SVAP-GIVEN T+P THIS COMPUTES THE ENTROPY
      IMPLICIT REAL*8(A-H,O-Z)
      DIMENSION P(10),H(10),S(10),PCON(10),AM(10),V(10),TO(10),HO(10),
     *DH(10),HCON(10),VCON(10),SFR(10),VDX(10),Z(10),VDC(10)
C     CALCULATE THE ENTHALPY OF THE WATER AT THE ENTRANCE TO THE FLASH
C     TO FIND FLASH VAPOR FRACTION
      P9=67.
      T9=TSAT(P9)
      H(1)=HLIQ(T9)
      CALL PROPPH(AM(1),SZ,VZ,TZ,M1,P(1),H(1))
      DO 60 I=2,NUMB
      T=TSAT(P(I-1))
      H(I)=HLIQ(T)
 60   CALL PROPPH(AM(I),SZ,VZ,TZ,M1,P(I),H(I))
C     FIND THE S AND H OF THE STEAM
      DO 61 I=1,NUMB
      TO(I)=TSAT(P(I))
      S(I)=SVAP(TO(I),P(I))
 61   CALL PROPPS(AQ,H(I),TZ,V(I),M1,P(I),S(I))
C     START VARYING THE CONDENSER PRESSURES
      PCON(1)=2.
      DO 10 J=1,3
      PCON(1)=PCON(1)-.5
      PCON(2)=2.
      DO 10 JJ=1,3
      PCON(2)=PCON(2)-.5
      PCON(3)=2.
      DO 10 MM=1,3
      PCON(3)=PCON(3)-.5
      PCON(4)=2.
      DO 10 MK=1,3
      PCON(4)=PCON(4)-.5
      DO 62 I=1,NUMB
C     CALCULATE THE TURBINE EXHAUST ENTHALPY
      CALL PROPPS(AX,HO(I),TO,VO,MO,PCON(I),S(I))
C     CORRECT FOR TURBINE EFFICIENCY
      DH(I)=(H(I)-HO(I))*.78
      HCON(I)=H(I)-DH(I)
C     CALC THE SPECIFIC VOLUME OF THE EXIT STEAM
 62   CALL PROPPH(AX,SX,VCON(I),TX,MX,PCON(I),HCON(I))
C     CALC THE POWER THROUGH EACH TURBINE
      POW1=DH(1)*(1.-AM(1))
      POW2=DH(2)*(1.-AM(2))*AM(1)
      POW3=DH(3)*(1.-AM(3))*AM(2)*AM(1)
      POW4=DH(4)*(1.-AM(4))*AM(3)*AM(2)*AM(1)
C     FIND WATER AND STEAM FLOW RATES
      WFR=XMW/(POW1+POW2+POW3+POW4)
      SFR(1)=WFR*(1.-AM(1))
      SFR(2) = WFR*(1.-AM(2))*AM(1)
      SFR(3)=WFR*(1.-AM(3))*AM(2)*AM(1)
      SFR(4)=WFR*(1.-AM(4))*AM(3)*AM(2)*AM(1)
      WRITE(51,2) XMWW
 2    FORMAT(1X,/,1X,'PLANT MEGAWATT RATING =  ',F10.2)
      DO 63 I=1,NUMB
      VDX(I)=SFR(I)*V(I)/3600.
      VDC(I)=SFR(I)*VCON(I)/3600.
      WRITE(51,3) P(I),PCON(I)
      WRITE(51,4) VDX(I),VDC(I)
      Z(I)=1.-AM(I)
      WRITE(51,91) I,Z(I)
 91   FORMAT(1X,'FLASH ',I2,' VAPOR FRACTION = ',F5.3)
 63   CONTINUE
      CALL WEO(XMWW,SFR,PCON,WFR,NUMB)
 10   CONTINUE
 4    FORMAT(1X,'INPUT FLOW = ',F8.0,' EXHAUST FLOW = ',F8.0)
 3    FORMAT(1X,'FLASH PRESSURE = ',F5.0,' CONDENSER PRESSURE = ',F5.3)
      RETURN
```

```
      SUBROUTINE WED(XMW,SFR,PCON,WFR,NUMB)
C     THIS SUBROUTINE CALCULATES COSTS AND TURBINE ROUTING
C
C     NOMENCLATURE**** BMC-BASIC COST FOR A SINGLE FLOW 23 INCH LAST
C     STAGE BLADE LENGTH TURBINE OF THE GIVEN RATING,ADF-NUMBER OF
C     ADDITIONAL EXHAUST ENDS NEEDED,TTC- TOTAL COST OF THE TURBINES
C     BLL-LAST STAGE BLADE LENGTH,GALW-GALLONS OF WATER GOING INTO THE
C     CONDENSER,TANKC-CONDENSER COST,FTC-FLASH TANK COST,WELLC-WELL COST
C     TOT-TOTAL PLANT COST,FAX-$/KWH
C
      IMPLICIT REAL*8(A-H,O-Z)
      DIMENSION SFR(10),PCON(10)
      ADDC=0.
      ADDC1=0.
      ADDC2=0.
      ADDC3=0.
C     LOAD XMW INTO DUMMY VARIABLE
      XBW=XMW
C     ARE ALL CONDENSER PRESSURES EQUAL
      IF(PCON(1)-PCON(2)) 30,31,30
 31   IF(PCON(2)-PCON(3)) 32,33,32
 33   IF(PCON(3)-PCON(4)) 34,103,34
C     THE FIRST 3 CONDENSER PRESSURES ARE EQUAL, ROUTE THROUGH THE SAME
C     TURBINE
 34   SF=SFR(1)+SFR(2)+SFR(3)
      SFRX=SFR(4)
      PCO1=PCON(1)
      PCO2=PCON(4)
      GO TO 108
C     THE THIRD IS NOT EQUAL, HOW ABOUT THE FOURTH
 32   IF(PCON(2)-PCON(4)) 37,36,37
C     ROUTE 1,2 AND 4 INTO THE SAME TURBINE
 36   SF=SFR(1)+SFR(2)+SFR(4)
      SFRX=SFR(3)
      PCO1=PCON(1)
      PCO2=PCON(3)
      GO TO 108
C     HOW ABOUT 3+4
 37   IF(PCON(3)-PCON(4)) 38,39,38
C     ROUTE 1+2 INTO A TURBINE, AND 3+4 INTO ANOTHER
 39   SF=SFR(1)+SFR(2)
      SFRX=SFR(3)+SFR(4)
      PCO1=PCON(1)
      PCO2=PCON(3)
      GO TO 108
C     ROUTE 1+2 TOGETHER AND 3+4 SEPARATELY
 38   SFR1=SFR(1)+SFR(2)
      SFR2=SFR(3)
      SFR3=SFR(4)
      PCON1=PCON(1)
      PCON2=PCON(3)
      PCON3=PCON(4)
      GO TO 106
 30   IF(PCON(1)-PCON(3)) 60,61,60
 61   IF(PCON(1)-PCON(4)) 62,63,62
C     ROUTE 1,3,4 TOGETHER AND 2 SEPARATELY
 63   SF=SFR(1)+SFR(3)+SFR(4)
      SFRX=SFR(2)
      PCO1=PCON(1)
      PCO2=PCON(2)
      GO TO 108
 62   IF(PCON(2)-PCON(4)) 64,65,64
C     1+3 TO TURBINE 1  2+4 TO TURBINE 2
 65   SF=SFR(1)+SFR(3)
      SFRX=SFR(2)+SFR(4)
      PCO1=PCON(1)
      PCO2=PCON(2)
      GO TO 108
C     1+3 TOGETHER, 2 AND 4 SEPARATELY
 64   SFR1=SFR(1)+SFR(3)
      SFR2=SFR(2)
      SFR3=SFR(4)
      PCON1=PCON(1)
      PCON2=PCON(2)
```

```
      PCON3=PCON(4)
      GO TO 106
 60   IF(PCON(1)-PCON(4)) 66,67,66
 67   IF(PCON(2)-PCON(3)) 68,69,68
C     ROUTE 1+4 AND 2+3
 69   SF=SFR(1)+SFR(4)
      SFRX=SFR(2)+SFR(3)
      PCO1=PCON(1)
      PCO2=PCON(2)
      GO TO 108
C     (1,4)  (2)  (3)
 68   SFR1=SFR(1)+SFR(4)
      SFR2=SFR(2)
      SFR3=SFR(3)
      PCON1=PCON(1)
      PCON2=PCON(2)
      PCON3=PCON(3)
      GO TO 106
 66   IF(PCON(2)-PCON(3))70,71,70
 71   IF(PCON(3)-PCON(4)) 72,73,72
C     (2,3,4)  (1)
 73   SF=SFR(2)+SFR(3)+SFR(4)
      SFRX=SFR(1)
      PCO1=PCON(2)
      PCO2=PCON(1)
      GO TO 108
C     (2,3)  (1)   (4)
 72   SFR1=SFR(2)+SFR(3)
      SFR2=SFR(1)
      SFR3=SFR(4)
      PCON1=PCON(2)
      PCON2=PCON(1)
      PCON3=PCON(4)
      GO TO 106
 70   IF(PCON(2)-PCON(4)) 74,75,74
C     (2,4)   (1)   (3)
 75   SFR1=SFR(2)+SFR(4)
      SFR2=SFR(1)
      SFR3=SFR(3)
      PCON1=PCON(2)
      PCON2=PCON(1)
      PCON3=PCON(3)
      GO TO 106
 74   IF(PCON(3)-PCON(4)) 76,78,76
C     (3,4)  (1)   (2)
 78   SFR1=SFR(3)+SFR(4)
      SFR2=SFR(1)
      SFR3=SFR(2)
      PCON1=PCON(3)
      PCON2=PCON(1)
      PCON3=PCON(2)
      GO TO 106
 76   GO TO 90
C     THIS SECTION SIZES AND COSTS WHEN 2 TURBOGENERATOR UNITS ARE
C     UTILIZED--THUS (2) 50 MW UNITS
 108  XBW=XMW/2.
      BMC= 2177000.*((XMW/135.)**.7)
      ADF=((SF -494000.)/494000.)*(2./PCO1)
      IADF= ADF+.5
      WRITE(51,77) IADF
      IF(IADF-7) 45,46,46
```

```
 46    CALL ADFC(IADF,ADDC,BMC)
       GO TO 110
 45    ADDC=BMC*.6*.48*IADF
 110   TTC=BMC+ADDC
       WRITE(51,88) TTC
 88    FORMAT(1X,'TURBOGENERATOR COST =  ',F12.0)
       ADF1=((SFRX-494000.)/494000.)*(2./PCO2)
       IADF1= ADF1+.5
       WRITE(51,77) IADF1
       IF(IADF1-7) 47,48,48
 48    CALL ADFC(IADF1,ADDC1,BMC)
       GO TO 49
 47    ADDC1=BMC*.6*.48*IADF1
 49    TTC1= BMC+ADDC1
       WRITE(51,88) TTC1
       TTCT=TTC+TTC1
       GO TO 90
C      THIS SECTION IS USED FOR 3 TURBOGENERATOR UNITS,  (3) 33 MW
 106   XBW=XMW/3.
       BMC= 2177000.*((XMW/135.)**.7)
       ADF1=((SFR1-494000.)/494000.)*(2./PCON1)
       ADF2=((SFR2-494000.)/494000.)*(2./PCON2)
       ADF3=((SFR3-494000.)/494000.)*(2./PCON3)
       IADF1=ADF1+.5
       IADF2=ADF2+.5
       IADF3=ADF3+.5
       ADDC1=BMC*.6*.48*IADF1
       ADDC2=BMC*.6*.48*IADF2
       ADDC3=BMC*.6*.48*IADF3
       TTC1=BMC+ADDC1
       TTC2=BMC+ADDC2
       TTC3=BMC+ADDC3
       TTCT=TTC1+TTC2+TTC3
 50    BLL1= 26.*(((SFR1*2./PCON1)/2464000.)**.537)
       BLL2= 26.*(((SFR2*2./PCON2)/2464000.)**.537)
       BLL3= 26.*(((SFR3*2./PCON3)/2464000.)**.537)
       WRITE(51,6) TTC1,BLL1
       WRITE(51,77) IADF1
       WRITE(51,6) TTC2,BLL2
       WRITE(51,77) IADF2
       WRITE(51,6) TTC3,BLL3
       WRITE(51,77) IADF3
 6     FORMAT(1X,'TURBOGENERATOR COST = ',F12.0,' LAST STAGE BLADE LENGTH
      * =  ',F12.3)
 77    FORMAT(1X,'NUMBER OF ADDITIONAL FLOW UNITS = ',I5)
       GO TO 90
C      THIS SECTION IS USED WHEN ONLY ONE TURBOGENERATOR TRAIN IS NEEDED
       BMC= 2177000.*((XMW/135.)**.7)
       ADF=((SFR(1)+SFR(2)+SFR(3)+SFR(4)-494000.)/494000.)*(2./PCON(1))
       IADF= ADF+.5
       IF(IADF-7) 41,40,40
 40    CALL ADFC(IADF,ADDC,BMC)
       GO TO 43
 41    ADDC=BMC*.6*.48*IADF
 43    TTCT=BMC+ADDC
       WRITE(51,88) TTCT
 90    CONTINUE
C      THIS SECTION COSTS THE CONDENSER, THE FLASH TANKS AND FINDS THE
C      TOTAL PLANT COST USING THE METHOD FROM HAPPEL
```

```
C       THE AMOUNT OF TOTAL WATER IN THE CONDENSER IS THE STEAM FLOW
C       RATE TIMES 6 TO ACCOUNT FOR THE CONDENSER COOLING WATER.  THIS IS
C       DIVIDED BY THE NUMBER OF POUNDS PER GALLON
        GALW=(SFR(1)+SFR(2)+SFR(3)+SFR(4))*6./8.
        TANKC=30.*(GALW**.48)*2.
        WN= WFR/1125000.
C       ASSUMING THE FLASH TANK MUST HOLD 1 SECONDS WORTH OF THE TOTAL
C       FLOW, DIVIDE THE FLOW PER WELL PER HR BY 3600 MULT BY THE NUMBER
C       OF WELLS AND MULT BY THE NUMBER OF FLASHES
        FTC=30.*((39.)**.48)*2.*WN*4.
        WRITE(51,7) TANKC,FTC
 7      FORMAT(1X,'CONDENSER COST = ',F10.0,'  FLASH TANK COST = ',F10.0)
        WELLC = WN*250000.
        TOT=3.69*(WELLC+TANKC+FTC+TTCT)
        FAX=(TOT*.18+800000.)/(100000.*24.*365.)
        WRITE(51,8) WN,WELLC
 8      FORMAT(1X,'NUMBER OF WELLS NEEDED = ',F10.2,'  WELL COST =',F12.0)
        WRITE(51,80) TOT
 80     FORMAT(1X,'TOTAL PLANT COST = ',F12.0)
        WRITE(51,11) FAX
 11     FORMAT(1X,'COST PER KILOWATT-HR = ',F10.6)
        RETURN
        END
        SUBROUTINE ADFC(IADF,ADDC,BMC)
C
C       THIS SUBROUTINE IS CALLED WHEN MORE THAN 6 EXHAUST ENDS ARE NEEDED.
C       IT ADDS ON AN ADDITIONAL TURBOGENERATOR UNIT
C
        IMPLICIT REAL*8(A-H,O-Z)
        IX=IADF-7
        AD1=BMC*.6*.48*6.
        ADDC=AD1+BMC+BMC*.6*.48*IX
        WRITE(51,42) IX
 42     FORMAT(1X,'AN ADDITIONAL GENERATOR WITH ',I5,' FLOWS HAS BEEN ADDE
       *D')
        RETURN
        END
/*
//LINK.FT33F001 DD VOLUME=REF=ZZZZZZ,DISP=SHR,
// DCB=(RECFM=FBS,LRECL=80,BLKSIZE=3200),
// DSNAME=A8.G4.P37093.C11968.BOWERS
//LINK.SYSIN DD *
 INCLUDE FT33F001
/*
//GO.FT50F001 DD *
  100.
/*
//
//
```

9.3 Plant Costing

The total plant cost was calculated as a multiple of the total equipment cost (including wells and major pieces of equipment). The procedure followed is outlined below:

Equipment total = ET = Well Cost + Turbine Cost + Condenser Cost + Flash Tank Cost + Cooling Water Pump Cost

Additional Costs Item & Labor	Fraction of Equipment Total (9)
Instrumentation	.1
Insulation	.1 + .15
Piping	.4 + .4
Foundation	.03 + .03
Buildings	.04
Structures	.04
Fireproofing	.02
Electrical	.06
	1.37 (Equipment Total)

P = 2.37 × Equipment Total = Installed equipment cost

Overhead = .3 P

Total Erected Cost = 1.3 P

Engineering Fee = 13% of P

Contingency = 13% of P

Total Investment = 1.56 P = 3.69 × Equipment Total

Sample calculation for 4-flash stage plant

Total plant cost	=	12,954,700	
3.69 (Total)	=	47,803,000	
.18 (Total Investment)	=	8,604,540	annual cost
Operating cost	+	800,000	
Utility	+	146,000	
	=	9,550,540	

¢/kWhr = 100(9,550,540)/(100·1000·365·24) = 1.09¢

9.4 Steam Turbine Costing

Because relatively few steam turbines have been designed for geothermal purposes, it was quite difficult to obtain an actual cost table. The turbines selected in this study are based on one to be installed at the Geysers geothermal power plant in Northern California. A quote from General Electric in Lynn, MA, for delivery in 1976 of 4 flow-23" last stage blade length 135 MW rated turbine is $4,466,000. From simple calculations using the GE Turbogenerator price (7) list #4721, each additional exhaust end increased the turbogenerator cost by 48% of the turbine cost fraction of the unit (6). The cost of a basic single flow-23" last stage blade length turbine (i.e., 1-23"), was approximated as:

$$\text{Cost (4-23")} = \text{Cost (1-23")} + \text{Cost (1-23")} \times$$
$$\text{(additional exhaust end fraction of Basic Cost)} \times$$
$$\text{(Turbine cost percentage of turbogenerator)} \times$$
$$\text{(3 additional flows)}$$

assume

$$\text{Cost (1-23")} = x$$

$$\$4{,}466{,}000 = x + x(.48)(.6)(3) = 1.864x$$

$$\text{Cost (1-23")} = x = \$2{,}396{,}000 \ .$$

Calculations also show that each additional exhaust end adds 494,000 lb_m/hr capacity. Thus to determine the cost of a specific turbine, one would take the basic cost for a single flow-23" turbine at the specified MW rating and add on the additional cost for the number of exhaust ends needed.

For the low MW ranges a power law figure of .7 was assumed. Therefore,

$$\text{Basic Cost} = 2{,}396{,}000\ (\text{MW}/135)^{.7}$$

This gives the basic cost for a single flow-23" turbine at the given MW rating. And, the additional cost equals number of exhaust ends × cost/end. The Geysers turbine has a condenser pressure of 2 psia while our condenser pressure is a variable. Assuming that pressure is inversely proportional to volume, changing the condenser pressure from 2 to 1 increases the exhaust volume flow by a factor of 2.

The exhaust pressure correction equals the number of additional exhaust ends times (2 psia/condenser pressure). And the additional cost can be approximated as:

$$\text{Additional Cost} = \text{number of exhaust ends} \times \text{cost/end} =$$
$$[(\text{steam flow rate} - 494{,}000)/494{,}000] \times \left[\frac{2\ \text{psia}}{\text{condenser pressure}}\right] \times$$
$$[\text{Basic Cost}] \times .6 \times .48$$

The number of exhaust ends is taken to be an integer.

9.5 Costing of Alternate Working Fluid Turbines

Turbine size and cost depends primarily on two variables: the flow rate and the exit pressure (see Table 2).

Fluid	Turbine Exit Pressure, psia	Vapor Flow Rate lb_m/hr
Freon-12	84.9	2.78×10^7
Freon-22	136.	2.26×10^7
Propane	124.	1.32×10^7
Freon-13B1	213.	5.65×10^7

The prices quoted on Freon turbines range from \$10/kW to \$100/kW. Once Freon turbines are produced on a larger scale, it is reasonable to assume that the price range will be reduced somewhat: \$10/kW to \$30/kW. An isobutane turbine has been built at a cost of \$18/kW.

A power law correlation was established between exhaust flow rate, exit pressure and last stage blade length, and can be expressed as:

$$\text{Last stage blade length}'' = 0.6 + 26'' \times [\text{Flowrate lb/hr} \times 2 \text{ psia/exit pressure psia})/2{,}464{,}000 \text{ lb/hr})]^{.537}$$

For each fluid, the following table lists last stage blade length corresponding to the condenser pressure and flow rate used in the alternate working fluid cycles.

Fluid	Last Stage Blade Length
Freon-12	13.4"
Freon-22	9.5"
Freon-13B1	12.0"
Propane	7.6"

The turbine prices are found from the GE price list (7). A turbine with the same last stage blade length was scaled up to the required rating. The scale-up involves adding \$9/kW and \$12/kW of uprating and then multiplying times the current cost factor. At the time of this report, the factor was 0.7.

Freon-22 - Find cost for 100 MW, then divide by the number of kW to get \$/kW.

$$[(90000)9 + 107000(12) + 1115000] \times .7/100000 = \$22.4/kW$$

Freon-12

$$[(85000)9 + 104000(12) + 1440000] \times .7/100000 = \$24.1/kW$$

Freon-13B1

$$[(87500)9 + (104000)12 + 1285000] \times .7/100000 = \$23.2/kW$$

Propane

$$[(93700)9 + (110000)12 + 945000] \times .7/100000 = \$21.8/kW$$

9.6 Costing of Other Flashing Equipment

Wells - Assuming 10 ft/sec the flow is 1,125,000 lb/hr through a 10" diameter well. The cost of each well = $250,000, but an additional well is required in each case for reinjection. In addition for the flashing case a 5% penalty was introduced to account for steam ejectors to remove non-condensables.

Condenser Costs - The condenser was sized according to its capacity (gallons). It was assumed that at any time the condenser would contain 1 second of the total well flow assuming 8 lb/gal. Also, it must contain 29 times as much cooling water to account for the loss of the latent heat of vaporization. From Chilton (20)

$$\text{cost } (\$) = 30\left(\frac{\text{total lb/hr}}{3600(8)}\right)^{0.48}$$

The cost is then updated to account for inflation.

Flash Tank Cost - The flash tank was costed in the same manner as the condenser, however, since each well has its own set of flash tanks,

$$\text{Cost} = [30 \times (\text{total lb/hr/well}/3600 \times 8)^{.48}] \times \text{number of wells} \times \text{number of flashes}$$

Cooling Water Pump - For the 4-flash stage case

$$\text{Total lb steam/hr} = 2{,}191{,}290 \text{ lb/hr} = 609 \text{ lb/sec}$$

Average condenser $\Delta T = 30°F$

Latent heat of vaporization $\sim$1000 Btu/lb

Steam entering has $\sim$10% moisture

Therefore $\sim$30 lbs of water are required to condense 1 lb/steam.

Cooling water flow = 18260 lb/sec

A total head of 48 ft or ∿1.5 atm = 3175 lb_f/ft^2 is required. With a pump efficiency of .75 and a specific water volume $\bar{V}$ of .016 ft^3/lb_m, the work requirement is 67.7 $ft\text{-}lb_f/lb_m$ water. Therefore, total work = 18240 lb_m/sec × 67.7 $ft\text{-}lb_f/lb_m$ = 1,237 × 10^6 $ft\text{-}lb_f$/sec. Since 1 hp = 550 ft-lb/sec, the required power is 2250 hp. With a motor cost (1967) of $3000 (20) and water flow of 1.14 × 10^5 gpm, twelve 1000 gpm pumps @ $2000/pump ($24,000) are required. The combined pump and motor cost is $27,000 assuming all pumps are on the same shaft and 1.68 MW are needed to run the motor.

9.7 Costing Alternate Working Fluid Process Equipment

The required heat exchangers are all very large (>20,000 ft^2) and employ 40 foot long tubes. The cost per square foot is constant in this range (20,000 to 60,000 ft^2) and from Holland, Moores, Watson, and Wilkinson (10) is about $1.70 per square foot. The cost of the cycle pump and motor and cooling water pump and motor are given as a function of horsepower in Chilton (20).

The condenser cost was based on the cost of a shell and tube heat exchanger of equivalent surface area. Tube lengths of twenty feet were chosen to minimize cost per square foot. In addition, longer tubes would adversely affect flow characteristics. From Holland, Moores, Watson, and Wilkinson (10) the cost per square foot in this range is $2/$ft^2$.

9.8 Thermophysical Property Estimation and Calculation of $\bar{\gamma}$

9.8.1 Properties

Heat Capacity, C_p - The heat capacities of the working fluids at the temperatures and pressure in the heat exchanger were determined by approximating $C_p \cong (\Delta H/\Delta T)_p$ which are obtained from a pressure-enthalpy diagram or enthalpy estimations.

At p = 835 psia over the temperature interval (205–225°F) $C_p \sim \frac{98-79}{225-205}$ = 0.95 Btu/lb_m°F from the p-H diagram (Fig. 9).

T(°F)	85–105	105–125	125–145	145–165	165–185	185–205
C_p(Btu/lb°F)	0.303	0.325	0.339	0.364	0.400	0.450
T(°F)	205–225	225–245	245–265	265–280		
C_p(Btu/lb°F)	0.950	1.05	0.475	0.365		

Kinematic Viscosity, μ - Fluid viscosities at the critical point (μ_c) were calculated using the method of Uyehara and Watson (11).

$$\mu_c \text{ (micropoise)} = \frac{61.6\sqrt{M \cdot T_c}}{V_c^{2/3}} \tag{30}$$

The reduced viscosity (μ_r) is a function of reduced pressure (P_r) and temperature (T_r) (4). Then $\mu = \mu_r \mu_c$. For Freon-22,

Required data:
P_c (critical pressure) = 722 psia
M (molecular weight) = 86.5
T_c (critical temperature) = 369.6°K = 665°R
V_c (critical specific volume) = 165 cm^3/g-mole
P (pressure in heat exchanger) = 835 psia

$$\mu_c \text{ (viscosity at critical point)} = \frac{61.6\sqrt{(M)(T_c)}}{V_c^{2/3}} \tag{30}$$

$$= \frac{61.6\sqrt{(86.5)(369.6)}}{(165)^{2/3}}$$

$$= 366 \text{ micropoise} = 0.089 \text{ lb/hr-ft}$$

$$P_r = \frac{P}{P_c} = \frac{835 \text{ psia}}{722 \text{ psia}} = 1.16$$

μ_r can be found graphically from Hougen and Watson page 871 (11) at P_r = 1.16 and using the relationship $\mu = \mu_r \mu_c$:

T(°R)	545	565	585	605	625	645	665	685	705	725	740
T_r	0.82	0.85	0.88	0.91	0.94	0.97	1.00	1.03	1.06	1.09	1.11
μ_r	4.9	4.4	3.7	3.5	3.1	2.6	1.3	1.0	0.77	0.74	0.71
μ (lb/hr-ft)	0.44	0.39	0.33	0.31	0.28	0.23	0.12	0.089	0.069	0.066	0.063

Thermal Conductivity, k - Using the value of $k^{LP}_{86°}$ at 86°F and low pressure from (1), the values of k^{LP}_T at all temperatures (85°F to 280°F in 20° increments) and low pressure can be calculated using the method of Owens and Thodos (18)

$$\frac{k^{LP}_T}{k^{LP}_{86°F}} = \left[\frac{546°R}{T(°R)}\right]^{1.786} \tag{31}$$

Then, the thermal conductivity, k^P_T, at heat exchange pressure for each temperature can be calculated, again using the method of Owens and Thodos (18)

$$k_T^P = \frac{A[e^{B\rho_r} + C]}{\nu Z_c^5} + k_T^{LP} \quad \text{(cal/cm-sec-°C)} \tag{32}$$

where ρ_r = reduced density (dimensionless) at P and T
Z_c = critical compressibility factor (dimensionless)

$$\nu = \frac{M^{1/6} T_c^{1/2}}{P_c^{2/3}} \tag{33}$$

A,B,C: Constants $f(\rho_r)$

ρ_r	$A \times 10^8$	B	C
<0.5	14.0	−0.535	−1
0.5–2.0	13.1	0.67	−1
2.0–2.8	2.98	1.155	+2

For Freon-22

Data required:
P_c = 49.2 atm
Z_c = 0.264
$k_{LP}^{86°F}$ (thermal conductivity at 86°F and low pressure)
= 0.05 Btu/hr-ft-°F (1)
= 2.07×10^{-4} cal/sec-cm-°C
ρ_r (reduced density) = f(T) at P = 835 psia from p-H diagram (1)

First, calculate $k_{LP} = f(T)$ from Eq. (31) at T = 165°F

$$k_{LP}^{625} = \left(\frac{545}{625}\right)^{1.786} \cdot (0.05)$$

= 0.029 Btu/hr-ft-°F

T(°R)	545	565	585	605	625	645	665	685	705	725	740
K_{LP}^T (Btu/hr-ft-°F)	0.050	0.047	0.044	0.041	0.039	0.037	0.035	0.033	0.032	0.030	0.029

Then, calculate $k_{835\ psia}^T$ for each temperature from ρ_r as a function of T read from p-H diagram (1)

T(°R)	545	565	585	605	625	645	665	685	705	725	740
ρ_r	2.27	2.19	2.10	2.01	1.91	1.80	1.53	0.874	0.556	0.471	0.429

and

$$k_{835}^{T} = \frac{A\ [e^{B\rho r(T)} + C]}{\nu\ Z_c^5} + k_{LP}^{T} \tag{32}$$

where $\nu = \dfrac{M^{1/6}\ T_c^{\ 1/2}}{P_c^{\ 2/3}}$

$$= \frac{(86.5)^{1/6}\ (369.6)^{1/2}}{(49.2)^{2/3}}$$

$$= 3.01$$

$$Z_c^5 = 0.00128 \qquad \nu\ Z_c^5 = 0.0039$$

For T = 165°F

$$k_{835\ \text{psia}}^{165°F} = \frac{13.1 \times 10^{-8}(e^{(0.67)(1.91)} - 1)}{(0.0039)(0.00414)\ \frac{\text{cal/cm·sec·°C}}{\text{Btu/ft·hr·°F}}} + 0.039$$

$$= 0.060\ \text{Btu/ft·hr·°F}$$

T(°F)	85	105	125	145	165	185	205	225	245	265	280
k_{835}^{T} (Btu/hr·ft·°F)	0.079	0.074	0.069	0.064	0.060	0.056	0.050	0.039	0.036	0.028	0.027

9.8.2 <u>Calculation of $\bar{\gamma}$</u>

Using $\gamma\ [= \dfrac{k^{0.45}\ C_p^{0.55}}{\mu^{0.22}}]$ at each temperature interval and (34)

$\dfrac{Q}{Q_T}$ from the Q-T diagram, $\bar{\gamma} = \Sigma\ \gamma\ \dfrac{Q}{Q_T}$ can be calculated.

For Freon-22 and T = 165 – 185°F, P = 835 psia

$k = 0.060 - 0.056 \sim 0.058$ Btu/ft·hr·°F

$C_p = 0.400$ Btu/lb°F

$\mu = 0.28 - 0.23 \sim 0.255$ lb/hr·ft

$$\gamma = \frac{(0.058)^{0.45}\ (0.4)^{0.55}}{(0.255)^{.22}} = 0.227$$

From the T-Q diagram (Fig. 9) $\frac{Q}{Q_T}$ can be obtained as a function of T and $\bar{\gamma}$ calculated as the sum of the $\gamma_i(\frac{Q}{Q_T})_i$ for each interval i. Table 6 summarizes the thermophysical properties of Freon-12, -13B1, and -22 and Propane.

Table 6. Thermophysical Properties

Freon-22:

T_c = 369.6°K P_c = 722 psia V_c = 165 cm^3/g-mole

ρ_c = 327 Z_c = .267 $k^{86°F}$ = .05 Btu/hr·ft·°F

μ_c = 366 micropoise P_r = 1.16

ν = 3.01 M = 86.5

T Interval °F	$\frac{Q}{Q_T}$	C_p Btu/lb·°F	μ lb/hr·ft	k Btu/hr·ft·°F	γ
85–105	0.0615	0.303	0.415	0.076	0.197
105–125	0.0659	0.325	0.360	0.072	0.207
125–145	0.0688	0.339	0.320	0.066	0.209
145–165	0.0738	0.364	0.295	0.062	0.215
165–185	0.0811	0.400	0.255	0.058	0.227
185–205	0.0913	0.450	0.175	0.053	0.252
205–225	0.1929	0.950	0.105	0.044	0.391
225–245	0.2128	1.05	0.079	0.038	0.412
245–265	0.0963	0.475	0.068	0.032	0.255
265–280	0.0556	0.365	0.064	0.028	0.210

$\bar{\gamma}$ = 0.297

Freon-13B1:

T_c = 335°K P_c = 39.1 atm V_c = 200 cm^3/g-mole

ρ_c = 46.5 lb/ft^3 Z_c = 0.280 $k^{86°F}$ = 0.022 Btu/hr·ft·°F

μ_c = 402 micropoise = 0.0974 lb/hr·ft P_r = 2.52

ν = 2.80 M = 149

Table 6 (continued)

T Interval °F	C_p Btu/lb·°F	μ lb/hr·ft	k Btu/hr·ft·°F	γ
85–105	0.98	0.48	0.028	0.232
105–125	"	0.43	0.024	0.224
125–145	"	0.36	0.022	0.222
145–165	"	0.34	0.020	0.216
165–185	"	0.31	0.016	0.200
185–205	"	0.25	0.015	0.203
205–225	"	0.24	0.014	0.198
225–245	"	0.22	0.014	0.202
245–265	"	0.20	0.012	0.192
265–280	"	0.18	0.011	0.190

$\bar{\gamma} = 0.203$

Propane:

$T_c = 370°K$ $P_c = 42$ atm $V_c = 200\ cm^3/g\text{-mole}$

$\rho_c = 13.7\ lb/ft^3$ $Z_c = 0.42$ $k^{86°F} = 0.056$ Btu/hr·ft·°F

$\mu_c = 230$ micropoise $= 0.0557$ lb/hr·ft $P_r = 1.62$

$\nu = 1.48$ $M = 44$

T Interval °F	C_p Btu/lb·°F	μ lb/hr·ft	k Btu/hr·ft·°F	γ
85–90	0.522	0.28	0.333	0.563
90–120	0.600	0.27	0.0798	0.322
120–150	0.650	0.22	0.0716	0.334
150–180	0.700	0.19	0.0631	0.341
180–200	0.890	0.15	0.0563	0.391
200–210	0.925	0.09	0.0506	0.423
210–220	1.17	0.07	0.0475	0.496
220–230	1.25	0.06	0.0417	0.495
230–240	1.27	0.059	0.0402	0.498
240–250	1.27	0.058	0.0393	0.497
250–260	1.40	0.057	0.0376	0.514
260–280	1.35	0.056	0.0359	0.497

$\bar{\gamma} = 0.430$

Table 6 (continued)

Freon-12:

T_c = 385°K P_c = 40.6 atm V_c = 217 cm^3/g-mole

ρ_c = 34.8 lb/ft^3 Z_c = 0.273 $k^{86°F}$ = 0.04 Btu/hr·ft·°F

μ_c = 368 micropoise = 0.0891 lb/hr·ft P_r = 1.17

ν = 2.51 M = 121

T Interval °F	C_p Btu/lb·°F	μ lb/hr·ft	k Btu/hr·ft·°F	γ
85–105	0.19	0.44	0.120	0.185
105–125	0.26	0.39	0.114	0.220
125–145	0.27	0.33	0.0904	0.210
145–165	0.28	0.31	0.0812	0.207
165–185	0.29	0.28	0.0528	0.178
185–205	0.33	0.23	0.0492	0.194
205–225	0.35	0.12	0.0448	0.222
225–245	0.39	0.089	0.0410	0.241
245–265	1.00	0.070	0.0388	0.416
265–280	0.45	0.066	0.0289	0.238

$\bar{\gamma}$ = 0.267

9.9 Heat Exchanger Design

The following is a calculation of the heat exchanger design for Freon-22,

From the cycle design,

$$Q^{HE} = 221 \times 10^7 \text{ Btu/hr}$$
$$N_{WF} = 22.6 \times 10^6 \text{ lb/hr}$$
$$N_W = 14.6 \times 10^6 \text{ lb/hr}$$

for reasonable size exchangers, six identical units will be used in parallel. Therefore,

$$Q^{HE} = Q^{HE}/6 = 36.9 \times 10^7 \text{ Btu/hr}$$
$$N_{WF} = N_{WF}/6 = 3.77 \times 10^6 \text{ lb/hr}$$
$$N_W = N_W/6 = 2.43 \times 10^6 \text{ lb/hr}$$

from T-Q diagram,

$$T_W^{in} = 300°F \qquad T_W^{out} = 150°F$$

$$T_{HWF}^{in} = 85°F \qquad T_{HWF}^{out} = 280°F$$

$$\therefore \quad \Delta T_{LM} = \frac{(150-85) - (300-280)}{\ln\left(\frac{(150-85)}{300-280}\right)} = 38.2°F \tag{35}$$

A correction factor $f \simeq 0.8$ for non-ideal flow in the heat exchangers was used and assuming $U = 230$ Btu/hr·ft^2·°F, then

$$A = \frac{Q^{HE}}{U\Delta T_{LM} f} = \frac{36.9 \times 10^7}{(230)(38.2)(0.8)} = 52{,}000 \text{ ft}^2 \tag{36}$$

For 5/8" O.D. tubes, 40 ft long:

$$D_0 = 0.0521 \text{ ft} \qquad L = 40 \text{ ft}$$

and Δ-pitch, the minimum $p = 1.25\ D_0 = (1.25)(0.0521) = 0.0651$ ft.

The equivalent shell side diameter [= 4(passage flow area/wetted perimeter)] for Δ-pitch,

$$D_2 = (3.464\ p^2/\pi D_0) - D_0 \tag{37}$$

$$= [(3.464)(0.0651)^2/(3.14)(0.0521)] - 0.0521$$

$$= 0.0376 \text{ ft.}$$

From stress considerations (835 psia) the tube thickness is $t = 0.0021$ ft. Tube side equivalent diameter is the tube I.D.,

$$D_1 = D_0 - 2(t) = (0.0421) - 2(0.0021)$$

$$= 0.0479 \text{ ft.}$$

The number of tubes,

$$n = \frac{A}{\pi D_0 L} = \frac{52{,}000}{(3.14)(0.0521)(40)} = 7900$$

The minimum shell inside diameter required is

$$D_s \approx p\ [\sqrt{\tfrac{4}{3} \cdot n} + 1] = 0.0651\ [\sqrt{\tfrac{4}{3} \cdot 7900} + 1] = 6.8 \text{ ft} \tag{38}$$

The nominal shell side mass flow rate is the total mass flow rate divided by the cross-sectional area:

$$G_W = \frac{N_W}{\frac{\pi D_s^2}{4} - n\,\frac{\pi D_0^2}{4}} \tag{39}$$

$$= \frac{(2{,}430{,}000)(\frac{4}{3.14})}{(6.8)^2 - (7900)(0.0521)^2}$$

$$= 125{,}000 \text{ lb/hr}\cdot\text{ft}^2$$

The nominal tube side mass flow rate is similarly:

$$G_{WF} = \frac{N_{WF}}{\frac{\pi D_1^2}{4} \cdot \frac{n}{N}} \tag{40}$$

where N = number of tube side passes.

For N = 4

$$= \frac{(3{,}770{,}000)\ \frac{4}{3.14}\ (4)}{(7900)(0.0479)^2}$$

$$= 1{,}060{,}000 \text{ lb/hr}\cdot\text{ft}^2$$

The shell side heat transfer coefficient is

$$h_w = 0.023\ \gamma_W\ D_2^{-0.2}\ G_W^{0.8} \tag{41}$$

where

$$\gamma_W = \left(\frac{k^{0.7}\ C_p^{0.3}}{\mu^{0.5}}\right)_W = \frac{(0.393)^{0.7}\ (1.0)^{0.3}}{(0.738^{0.5})} = 0.605 \tag{42}$$

$$h_W = (0.023)(0.605)(0.0376)^{-0.2}\ (125{,}000)^{0.8}$$

$$= 321 \text{ Btu/hr}\cdot\text{ft}^2\cdot{}^\circ\text{F}$$

The tube side (supercritical) heat transfer coefficient is

$$h_{WF} = 0.0266\ \bar{\gamma}_{WF}\ D_1^{-0.23}\ G_{WF}^{0.77} \tag{43}$$

$$= (0.0266)(0.297)(0.0479)^{-0.23}\ (1{,}060{,}000)^{0.77}$$

$$= 693\ \text{Btu/hr}\cdot\text{ft}^2\cdot{}^\circ\text{F}$$

(see Appendix 9.8 for calculation of $\bar{\gamma}_{WF}$).

As a check on the overall heat transfer coefficient,

$$U = \frac{1}{\frac{1}{h_W} + \frac{t}{k_T} + \frac{1}{h_{WF}}} \qquad k_T = 28\ \text{Btu/hr}\cdot\text{ft}\cdot{}^\circ\text{F} \tag{44}$$

$$= \frac{1}{\frac{1}{321} + \frac{.0021}{28} + \frac{1}{693}}$$

= 220 Btu/hr·ft^2·°F which was assumed to be close enough to the estimated value (230).

The pressure drop on the tube side of the exchanger is

$$\Delta P_{WF} = fd \left[\frac{G_{T_{WF}}^2}{\bar{\rho}_{WF} \cdot 12 \times 10^{10}}\right] \frac{L\ N}{D_1} \tag{45}$$

where fd, the friction factor was assumed to be approximately 0.02, $\bar{\rho}_{WF}$ is the average density of the working fluid in the exchanger taken to be approximately 44 lb/ft^3.

$$= 0.02 \left[\frac{(1{,}060{,}000)^2}{(44)(12) \times 10^{10}}\right] \frac{(40)(4)}{0.0479}$$

= 14.2 psia ∿2% of the working pressure.

On the shell side,

$$\Delta P_W = .8fd \left[\frac{G_{T_W}^2}{\rho_W \cdot 12 \times 10^{10}}\right] \frac{D_s}{D_2} \tag{46}$$

$$= (8)(0.02)\ \frac{(125{,}000)^2}{(60)(12 \times 10^{10})}\ \frac{6.8}{.0376}$$

$\sim$0.06 psia $\sim$0

A summary is contained in Table 7.

Table 7. Summary of Heat Exchanger Design Parameters

		Freon-12	Freon-22	Freon-13B1	Propane
	Number of exchangers	6	6	25	6
	Q^{HE} (Btu/hr)	34.4×10^7	36.9×10^7	9.52×10^7	35.2×10^7
	N_W (lb/hr)	2.65×10^6	2.43×10^6	0.476×10^6	2.20×10^6
	N_{WF} (lb/hr)	4.63×10^6	3.77×10^6	2.26×10^6	2.43×10^6
	T_W^{in} (°F)	300	300	300	300
	T_W^{out} (°F)	170	150	100	140
	T_{HWF}^{in} (°F)	85	85	85	85
	T_{HWF}^{out} (°F)	280	280	280	280
	ΔT_{LM} (°F)	44.9	38.2	17.4	34.6
	f	0.8	0.8	0.9	0.8
assumed	U (Btu/hr·ft^2·°F)	230	230	110	255
	A (ft^2)	42,000	52,000	55,000	50,000
	D_0 (ft)	0.0521	0.0521	0.03125	0.0417
	p (ft)	0.0651	0.0651	0.0391	0.0522
	t (ft)	0.0021	0.0021	0.0021	0.0021
	D_1 (ft)	0.0479	0.0479	0.02705	0.0375
	D_2 (ft)	0.0376	0.0376	0.0226	0.0301
	n	6400	7900	14,000	9500
	D_s (ft)	6.1	6.8	5.4	5.9
	G_W (lb/hr·ft^2)	1.7×10^5	1.25×10^5	0.39×10^5	1.53×10^5

Table 7 (continued)

G_{WF} (lb/hr·ft^2)	16×10^5	1.06×10^5	16.8×10^5	9.3×10^5
h_W (Btu/hr·ft^2·°F)	410	321	140	470
h_{WF} (Btu/hr·ft^2·°F)	855	693	770	970
calculated U (Btu/hr·ft^2·°F)	230	220	110	255
ΔP_W (psia)	∿0	∿0	∿0	∿0
ΔP_{WF} (psia)	22	14	240	31

9.10 Nomenclature

η efficiency of working fluid cycle = $\frac{W_{net}}{Q^{HE}}$

η_c Carnot efficiency

η_{rel} $W_{net}/\Delta B$

A area (ft^2)

ΔB availability of 1 lb_m^w

$$\left[T_0 \Delta S - \Delta H\right]_{300°F,\ 67\ psia}^{50°F,\ 67\ psia} (Btu/lb_m)$$

C_p heat capacity (Btu/lb°F)

D diameter in inches

$\Delta \dot{E}_p$ derivative of the change in internal energy of the pump with respect to time (Btu/lb_m)

$\Delta \dot{E}_T$ derivative of the change in internal energy of the turbine with respect to time (BTU/lb_m)

f correction factor to ΔT_{LM}, non-dimensional

G mass flow (lb/hr)

ΔH change in specific enthalpy (Btu/lb_m)

H specific enthalpy (Btu/lb_m)

H^*	specific enthalpy at zero pressure(Btu/lb_m)
H_{HW}^{out}	specific enthalpy of water coming out of the heat exchanger(BTU/lb_m)
H_{HW}^{in}	specific enthalpy of water going in the heat exchanger(Btu/lb_m)
H_{HWF}^{in}	specific enthalpy of the working fluid going into the heat exchanger (Btu/lb_m)
H_{HWF}^{out}	Specific enthalpy of the working fluid coming out of the heat exchanger(Btu/lb_m)
H_L	latent heat of condensation
H_p^{in}	specific enthalpy of the working fluid going into the pump(Btu/lb_m)
H_p^{out}	specific enthalpy of the working fluid coming out of the pump(Btu/lb_m)
H_T^{in}	specific enthalpy of the working fluid going into the turbine(Btu/lb_m)
H_T^{out}	specific enthalpy of the working fluid coming out of the turbine (Btu/lb_m)
h_W	heat transfer coefficient (Btu/hr·ft^2·°F)
k_W	thermal conductivity (Btu/hr·ft·°F)
lb_m^W	pound mass water
MW	megawatts = 1000 kW
Nu	Nusselt number
N_W	water flow rate (lb_m/hr)
N_{WF}	working fluid flow rate (lb_m/hr)
Pr	Prandl number
P_1	low cycle pressure (psia)
P_2	high cycle pressure (psia)
P_c	critical pressure(psia)
P_r	reduced pressure, P/P_c
Q	amount of heat transferred for a given temperature in the heat exchanger(Btu)
Q^{HE}	total heat transferred to working fluid in heat exchanger(Btu)
$\dot{Q}_p$	derivative of heat flow through the pump with respect to time (Btu/hr)

$\dot{Q}_T$	total heat load on the heat exchanger (Btu/hr)
Q_W^{HE}	total flux of heat from the water in the heat exchanger (Btu/hr)
Q_{WF}^{HE}	total flux of heat to the working fluid in heat exchanger (Btu/hr)
Re	Reynolds number
ΔS	change in specific entropy (Btu/lb_m°R)
t	thickness (ft)
T_c	critical temperature (°R)
T_{HWF}^{out}	temperature of working fluid out of the heat exchanger (°F)
T_{HWF}^{in}	temperature of working fluid into the heat exchanger (°F)
T_{HW}^{out}	temperature of water out of the heat exchanger (°F)
T_{HW}^{in}	temperature of water into the heat exchanger (°F)
T_0	cooling water temperature, 50°F
T_r	reduced temperature
V_{WF}	specific volume of working fluid (ft^3/lb_m)
W_{net}	net work from the cycle (Btu)
$\dot{W}_{net}$	net power from the cycle (watt)
W_p	work from the pump (Btu)
$\dot{W}_p$	pumping power (watt)
W_T	work done by the turbine (Btu)
$\dot{W}_T$	power done by turbine (watt)
Z_c	critical compressibility

9.11 References

1. American Society of Heating, Refrigerating, and Air Conditioning Engineers, Inc., "Thermodynamic Properties of Refrigerants," New York, 1969.

2. Bowers, H. I., "ORCENT: A Digital Computer Program for Saturated and Low Superheat Steam Turbine Cycle Analysis," ORNL-TM-2395 (January 1969).

3. Bringer, R.P., and J. M. Smith, "Heat Transfer in the Critical Region," AICHE J., 3(1), 49 (1957).

4. Cortez, D.H., B. Holt, and A.J.L. Hutchinson, "Advanced Binary Cycles for Geothermal Power Generation," Energy Sources, 1(1), 74 (1973).

5. Fenton, K., "Thermal Efficiency and Power Production," Pitman and Sons, Ltd., London, 1966.

6. Fraas, A.P., and M. N. Ozisik, "Heat Exchanger Design," Wiley and Sons, New York, 1965.

7. General Electric Price Data for Medium Steam Turbine-Generator Units, G.E. Price Catalog Section 4712, p. 32 (January 74).

8. Hansen, A., "Thermal Cycles for Geothermal Sites and Turbine Installation at the Geysers Power Plant, California," from Harnessing Geothermal Energy - Electricity Production, G-41, II.A.2, p. 365 (1972).

9. Happel, J.P., "Chemical Process Economics," Wiley and Sons, New York, 1958.

10. Holland, F., and R. Moores, "Heat Transfer," American Elsevier Publsihing Company, New York, 1970.

11. Hougen, O. A., K. M. Watson, and R. A. Ragatz, "Chemical Process Principles," John Wiley and Sons, New York, p. 621, (1947).

12. Jonsson, V.K., A. J. Taylor, and A. D. Charmichael, "Optimization of Geothermal Power Plant by Use of Freon Vapor Cycle," Timant, VF1, 1969.

13. Keenan, J.H., and F. G. Keyes, "Steam Tables," John Wiley and Sons, New York, 1969.

14. Landgraf, K.R., K. I. Kudrnac, and R. Solares, "Choice of Working Fluids and Operating Conditions for Energy Conversion with Geothermal Heat Sources," ORNL-MIT-180 (October 1973).

15. Landolt-Börnstein, "Zahlenwerte und Funktionen aus physik, chemie, astronomie, geophysik und technik," Springer,Berlin, 1950-1968.

16. Langan, L., and F. Manning, "Thermodynamic Properties and Reduced Correlations for Gases," Gulf Publishing Company, Texas, 1967.

17. Peters, M.S., and K. D. Timmerhaus, "Plant Design and Economics for Chemical Engineers," McGraw-Hill, New York, 1968.

18. Reid, R.C., and T. K. Sherwood, "Properties of Gases and Liquids," McGraw-Hill, New York, Second Edition, 1966.

19. United Nations, "United Nations Symposium on the Development and Utilization of Geothermal Resources," Pisa, Italy, Sept. 1970.

20. Chilton, C.H., "Cost Estimation Techniques," Wiley, New York, 1948.

ORNL-MIT-187

INTERNAL DISTRIBUTION

1. S.E. Beall
2. A.P. Fraas
3. L.C. Fuller
4. R.S. Livingston
5. R.N. Lyon
6. S.L. Milora
7. R.E. Minturn
8. E. Newman
9. J.J. Perona
10. T.H. Row
11. D.G. Thomas
12. D.B. Trauger
13-14. Central Research Library
15. Document Reference Section
16-18. Laboratory Records
19. Laboratory Records, ORNL R.C.
20. ORNL Patent Office
21-35. M.I.T. Practice School

EXTERNAL DISTRIBUTION

36. J.E. Vivian, MIT