CENTRAL RESEARCH LIBRARY

OAK RIDGE NATIONAL LABORATORY LIBRARY
3 4456 0022297 0

CD

ORNL-TM-4955

Cy 78

HTGR Fuel Development: Loading of Uranium on Carboxylic Acid Cation-Exchange Resins Using Solvent Extraction of Nitrate

P. A. Haas

OAK RIDGE NATIONAL LABORATORY
CENTRAL RESEARCH LIBRARY
DOCUMENT COLLECTION
LIBRARY LOAN COPY
DO NOT TRANSFER TO ANOTHER PERSON
If you wish someone else to see this document, send in name with document and the library will arrange a loan.
UCN-7969
13 3-67)

OAK RIDGE NATIONAL LABORATORY
OPERATED BY UNION CARBIDE CORPORATION • FOR THE U.S. ATOMIC ENERGY COMMISSION

Printed in the United States of America. Available from
National Technical Information Service
U.S. Department of Commerce
5285 Port Royal Road, Springfield, Virginia 22161
Price: Printed Copy $5.45; Microfiche $2.25

This report was prepared as an account of work sponsored by the United States Government. Neither the United States nor the Energy Research and Development Administration, nor any of their employees, nor any of their contractors, subcontractors, or their employees, makes any warranty, express or implied, or assumes any legal liability or responsibility for the accuracy, completeness or usefulness of any information, apparatus, product or process disclosed, or represents that its use would not infringe privately owned rights.

ORNL-TM-4955
UC-77 — Gas-Cooled Reactor Technology

Contract No. W-7405-eng-26

CHEMICAL TECHNOLOGY DIVISION

HTGR FUEL DEVELOPMENT: LOADING OF URANIUM ON CARBOXYLIC ACID CATION-EXCHANGE RESINS USING SOLVENT EXTRACTION OF NITRATE

P. A. Haas

SEPTEMBER 1975

NOTICE This document contains information of a preliminary nature and was prepared primarily for internal use at the Oak Ridge National Laboratory. It is subject to revision or correction and therefore does not represent a final report.

OAK RIDGE NATIONAL LABORATORY
Oak Ridge, Tennessee 37830
operated by
UNION CARBIDE CORPORATION
for the
ENERGY RESEARCH AND DEVELOPMENT ADMINISTRATION

OAK RIDGE NATIONAL LABORATORY LIBRARY
3 4456 0022297 0

CONTENTS

Page

ABSTRACT 1

1. INTRODUCTION 1

1.1 Review of Alternative Processes 2

1.2 Scope 4

1.3 Acknowledgments 6

2. CHEMICAL FLOWSHEET AND EQUILIBRIUM CONSIDERATIONS 6

2.1 Resin Loading Equilibrium 7

2.2 Nitrate Extraction Equilibrium 9

2.3 Amine Regeneration 10

3. EXPERIMENTAL APPARATUS AND PROCEDURES 10

3.1 Nitrate Extraction Components 11

3.2 Solvent Regeneration 11

3.3 Resin Loading Contactors 15

4. EQUIPMENT PERFORMANCE 17

4.1 Nitrate Extraction Contactor 17

4.2 Amine Regeneration System 17

4.3 Resin Loading Contactor 20

4.4 Process Instrumentation and Control 22

5. CHEMICAL FLOWSHEET AND QUANTITATIVE RESULTS 23

5.1 Run Conditions and Analyses of Loaded Resin 23

5.2 Integrated System Rates 25

5.3 Uranium Losses 29

5.4 Kinetics of Resin Loading 34

5.5 Resin Drying Results 35

6. CONCLUSIONS 38

7. APPENDIX: SIZING OF EQUIPMENT FOR RESIN LOADING IN COMMERCIAL HTGR FUEL FABRICATION PLANTS 39

7.1 Process Requirements 40

7.2 Capacity of a Continuous (Higgins) Loading Contactor . . . 41

CONTENTS (Continued)

Page

7.3 Capacities of Nitrate Extraction Contactors. 42

7.4 Capacities of Batch Loading Contactors 44

8. REFERENCES. 46

HTGR FUEL DEVELOPMENT: LOADING OF URANIUM ON CARBOXYLIC ACID CATION-EXCHANGE RESINS USING SOLVENT EXTRACTION OF NITRATE

P. A. Haas

ABSTRACT

The reference fuel kernel for recycle of ^{233}U to HTGR's (High-Temperature Gas-Cooled Reactors) is prepared by loading carboxylic acid cation-exchange resins with uranium and carbonizing at controlled conditions. The optimum loading results are obtained with uranyl and hydrogen as the only cations in acid-deficient solutions of uranyl nitrate (NO_3^-/U ratios of < 2). The purified $^{233}UO_2(NO_3)_2$ solution from a fuel reprocessing plant contains excess HNO_3 (NO_3^-/U ratio of $\sim$ 2.2). The reference flowsheet for a ^{233}U recycle fuel facility at Oak Ridge uses solvent extraction of nitrate by a 0.3 M secondary amine in a hydrocarbon diluent to prepare acid-deficient uranyl nitrate. This nitrate extraction, along with resin loading and amine regeneration steps, was demonstrated in 14 runs using components assembled from other development studies. All of the resin loading tests were completed as planned; no significant operating difficulties were encountered. The process is controlled via in-line pH measurements for the acid-deficient uranyl nitrate solutions. Information was developed on pH values for uranyl nitrate solution vs NO_3^-/U mole ratios, resin loading kinetics, resin drying requirements, and other resin loading process parameters. Calculations made to estimate the capacities of equipment which is geometrically safe with respect to control of nuclear criticality indicate 100 kg/day or more of uranium for single nitrate extraction lines with one continuous resin loading contactor or four batch loading contactors.

1. INTRODUCTION

The reference fuel kernel for recycle of ^{233}U to high-temperature gas-cooled reactors (HTGRs) is prepared by loading carboxylic acid cation-exchange resins with uranium and carbonizing at controlled conditions. The carbonized products must be high-uranium-content spheres containing only carbon and oxygen as the other major constituents. The optimum loading results are obtained with uranyl and hydrogen as the only

cations in acid-deficient solutions of uranyl nitrate (NO_3^-/U mole ratios of < 2).[1,2] A resin and a process condition to give spheres of acceptable composition were initially developed using the hydrogen form of the cation resin and loading with UO_3 to maintain acid-deficient uranyl nitrate.[1,2] The purified $^{233}UO_2(NO_3)_2$ solution from a nuclear fuel reprocessing plant contains excess HNO_3 (NO_3^-/U mole ratio of ∿ 2.2). When we considered the requirements for remote operation, accountability, and control of nuclear criticality, the usual processes for preparing UO_3 and the in-cell use of UO_3 did not seem acceptable.

1.1 Review of Alternative Processes

Partial thermal denitration of uranyl nitrate or a steam-stripping of nitric acid from molten uranyl nitrate was considered as an alternative process for producing the acid-deficient uranyl nitrate solutions. Thermal denitration to UO_3 can be completed at 300°C. Excess nitric acid (for NO_3^-/U ratios > 2) can be distilled from boiling uranyl nitrate solutions. The proposed process at temperatures intermediate to the preceding operations would involve boiling off nitric acid from concentrated uranyl nitrate to produce acid-deficient solutions. The steam denitration process was investigated in two types of test systems. Batch or semibatch laboratory studies were carried out in glass equipment. A stainless steel natural-convection evaporator loop was operated with 20 to 100 cc of uranyl nitrate solution feed per minute and a continuous discharge of the product. The preparation of acid-deficient uranyl nitrate by a steam-stripping or partial thermal denitration process is not as simple as had been expected. High uranium concentrations and boiling points above 140°C are required to give useful acid deficiencies. The products are a dilute (≤ 0.2 N) nitric acid condensate and a slurry of UO_3 in molten, slightly acid-deficient uranyl nitrate. This UO_3 will redissolve in diluted uranyl nitrate at temperatures below 100°C to produce highly acid-deficient uranyl nitrate. Freezing of the molten uranyl nitrate caused no problems, and the material was discharged and diluted without difficulty. Excessive corrosion of stainless steel occurred, but this might not be a problem if high NO_3^-/U ratios were avoided.

While UO_3 can be dissolved in uranyl nitrate solutions at 50°C to reduce the NO_3^-/U ratio to a value as low as 1.5, the UO_3 can settle and be difficult to resuspend. The technology for preparing UO_3 is well known, and the acid-deficient resin loading conditions have been determined using UO_3. All of the available design and experimental experience with remote operation of these processes confirms that serious operating problems are associated with the handling of the solid uranium compounds.

The exchange of UO_2^{2+} for H^+ in the feed resin is limited by the back reaction as H^+ accumulates in the solution. The loading reaction is:

$$2\ HR + UO_2^{2+} \rightleftarrows UO_2R_2 + 2\ H^+ , \qquad (1)$$

where R represents the carboxylic resin cation. The use of a salt form of the resin or the addition of base to the solution can control the accumulation of H^+. Ammonium is mostly volatilized when the resin is carbonized, while metals generally remain as unacceptable impurities in the final product. Therefore, the use of NH_4R or NH_4OH allows alternative resin loading flowsheets. Experimental tests showed promising loaded resin compositions using either NH_4R feed or NH_4OH additions during loading. The flowsheet conditions must be carefully selected and controlled to deal with two limitations. The loading of UO_2^{2+}, as compared to NH_4^+, is only moderately favorable; the loading process must be staged to give favorable (high) UO_2^{2+}/NH_4^+ ratios in equilibrium with the product resin. Significant decreases in uranium loadings occur for solution NH_4^+/UO_2^{2+} ratios greater than 0.5. The other limitation is that unacceptable precipitation of uranium occurs for conditions close to those necessary for good uranium recoveries and loadings. These two limitations control the allowable process conditions and results. Evaluation of these flowsheets is continuing, but they cannot be accepted until they are shown to meet final product specifications. The two major requirements to be determined are:

(1) Is the nitrogen content of the product (some preliminary analyses showed > 1000 ppm of nitrogen after carbonization) acceptable?

(2) Is the uniformity of the uranium contents, both particle-to-particle and within particle, acceptable? The non-equilibrium loading conditions, with the possibility of uranium precipitation, when ammonium-form resin is used result in uncertainties.

As a result of the factors reviewed above, none of the alternative processes appeared to be acceptable for selection as the reference flowsheet for detailed design of remote facilities. The probability of unacceptable operation was too high.

1.2 Scope

Acid-deficient uranyl nitrate solution can be produced by solvent extraction of the nitrate using liquid organic amines. Similar processes have been used for the preparation of oxide sols from thorium and uranium nitrate solutions.[3,4] The amine nitrate is contacted with basic solutions (Na_2CO_3, NaOH, or NH_4OH) to regenerate free amine for reuse, and the nitrate is discharged in the form of waste solutions containing $NaNO_3$ or NH_4NO_3. By adding an evaporator to remove water (Fig. 1), a highly efficient conversion of the purified $^{233}UO_2(NO_3)_2$ solution to loaded resin is possible.

The nitrate extraction, amine regeneration, and resin loading steps of the reference flowsheet (Fig. 1) were demonstrated using a system assembled from components of earlier process development programs. Provisions for the removal of water by evaporation were not included; thus the volume of uranyl nitrate solution increased as feed solution was added.

The experimental studies reported here were made to obtain results for an integrated system with a minimum of equipment or chemical flowsheet development. Each of the equipment components had been operated for similar purposes in other flowsheets. The extraction of nitrate from uranyl nitrate had been studied previously in laboratory equipment.[5] The regeneration of Amberlite LA-2* secondary amine had been included

---

*Trademark of the Rohm and Haas Co.

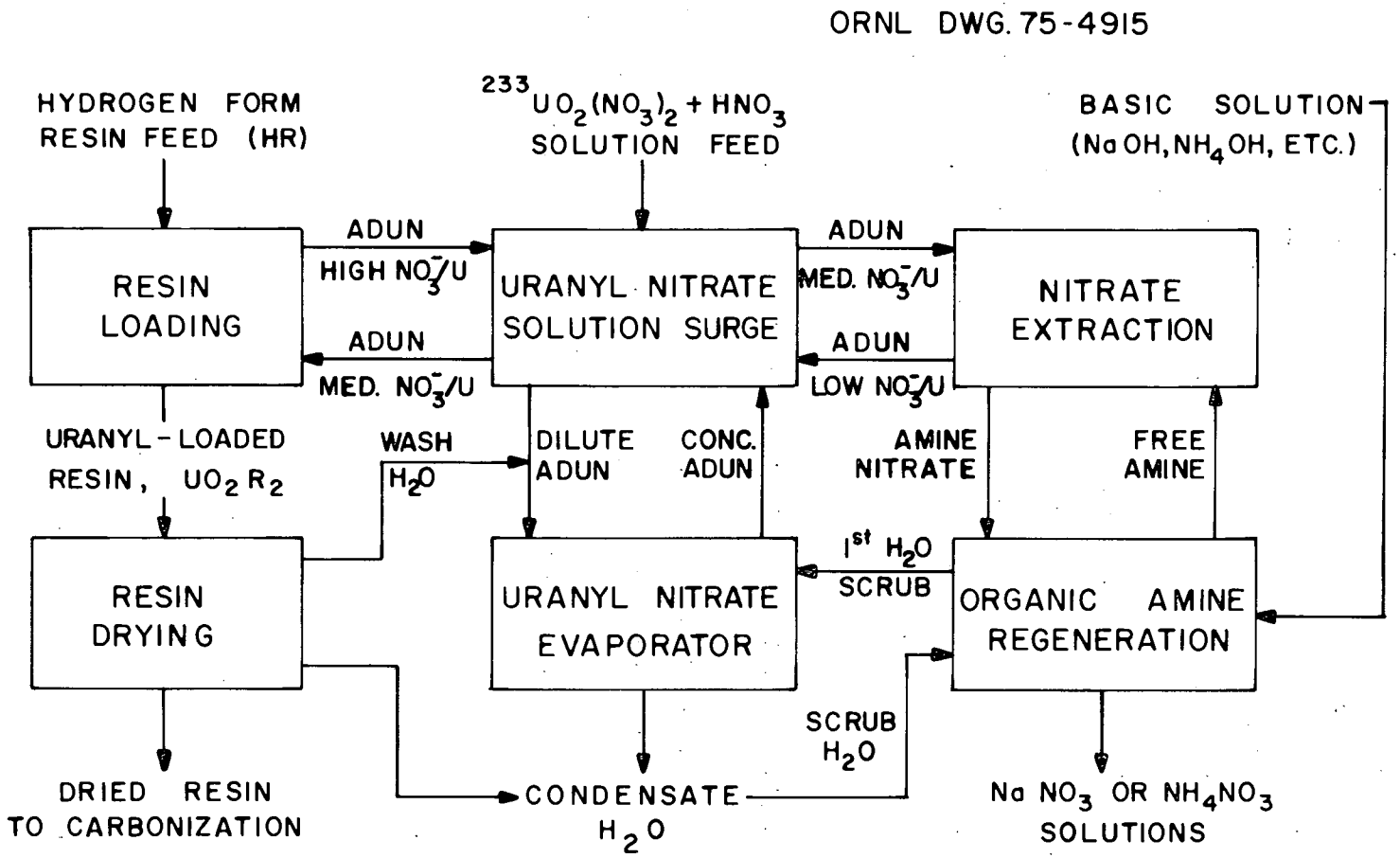

"ADUN" INDICATES ACID-DEFICIENT URANYL NITRATE ($NO_3/U<2$, MOLES/MOLE)

Fig. 1. Schematic reference flowsheet for FRPP resin loading.

as part of sol-gel demonstration runs.[3,4] The loading of resin with uranium from acid-deficient uranyl nitrate solutions that were 0.2 to 0.6 N in NO_3^- had been investigated in earlier studies.[1] The conditions previously found to be satisfactory for the other flowsheets were applied to the resin loading demonstration without any systematic optimization of variables. Based on the results of these studies, the loading of resin using solvent extraction of nitrate was selected as the reference flowsheet for the Fuel Refabrication Pilot Plant (FRPP) at ORNL.

1.3 Acknowledgments

These studies, which were part of the Thorium Utilization Program activities, were supervised by K. J. Notz, HTGR Program Director for the Chemical Technology Division. The integrated system was operated by R. D. Arthur and K. Ladd. Some of the resin loading rate and drying experiments were performed by J. Drago.

2. CHEMICAL FLOWSHEET AND EQUILIBRIUM CONSIDERATIONS

The resin loading, nitrate extraction, and amine regeneration steps of the reference flowsheet can be described by the following chemical reactions, where R represents the carboxylic acid cation resin and $R_2'NH$ represents the Amberlite LA-2 secondary amine (N-lauryl-N-trialkylmethylamine):

$$2HR + UO_2^{2+} \rightleftarrows UO_2R_2 + 2H^+ , \quad (1)$$

$$H^+ + R_2'NH + NO_3^- \rightarrow R_2'NH_2NO_3 , \quad (2)$$

and

$$R_2'NH_2NO_3 + NaOH \rightarrow R_2'NH + NaNO_3 + H_2O . \quad (3)$$

The uranyl nitrate is ionized in solution:

$$UO_2(NO_3)_2 \rightarrow UO_2^{2+} + 2NO_3^- . \quad (4)$$

By combining Eqs. (1)-(4), the feeds and products of Fig. 1 are obtained:

$$2HR + 2NaOH + UO_2(NO_3)_2 \rightarrow UO_2R_2 + 2NaNO_3 + 2H_2O \ . \qquad (5)$$

Any excess HNO_3 is discharged as $NaNO_3$ and H_2O; water in the uranyl nitrate solutions or resin feed is discharged as condensate. An equimolal mixture of NaOH and Na_2CO_3 was used for amine regeneration because any excess of NaOH results in poor liquid-liquid phase separation. After all the NaOH is neutralized, the Na_2CO_3 reacts to regenerate the amine as follows:

$$R_2'NH_2NO_3 + Na_2CO_3 \rightarrow R_2NH + NaNO_3 + NaHCO_3 \ . \qquad (6)$$

The flow of NaOH-Na_2CO_3 solution is controlled to allow complete neutralization of the NaOH but only partial conversion of the Na_3CO_3 to $NaHCO_3$.

2.1 Resin Loading Equilibrium

The loading of the resin was followed and controlled by measuring pH values for the acid-deficient uranyl nitrate solution. Approximate equilibrium data were available from the original development of the resin loading process with UO_3.[1] For 0.2 to 0.6 N NO_3^-, the final solution pH values for good loadings of Amberlite IRC-72* resin were 2.73 to 3.30. Approximate curves for solution pH values vs uranium loading for 0.3 N[1] and 0.6 N NO_3^- were used for the calculations given in this report. More precise measurements have since been reported by Shaffer (Fig. 2).[6]

The extent of resin loading was determined from pH measurements in two ways. A favorable pH for the exit solution from the resin loading contactor for 1 hr or more (based on equilibrium curves like those shown in Fig. 2) was considered an adequate criterion of good loading. The uranium concentration was determined either from chemical analyses or from solution density measurements. The difference between the pH values for the solutions entering and leaving the loading contactor was a sensitive measure of whether uranium loading was occurring, that is, whether

*Trademark of the Rohm and Haas Co.

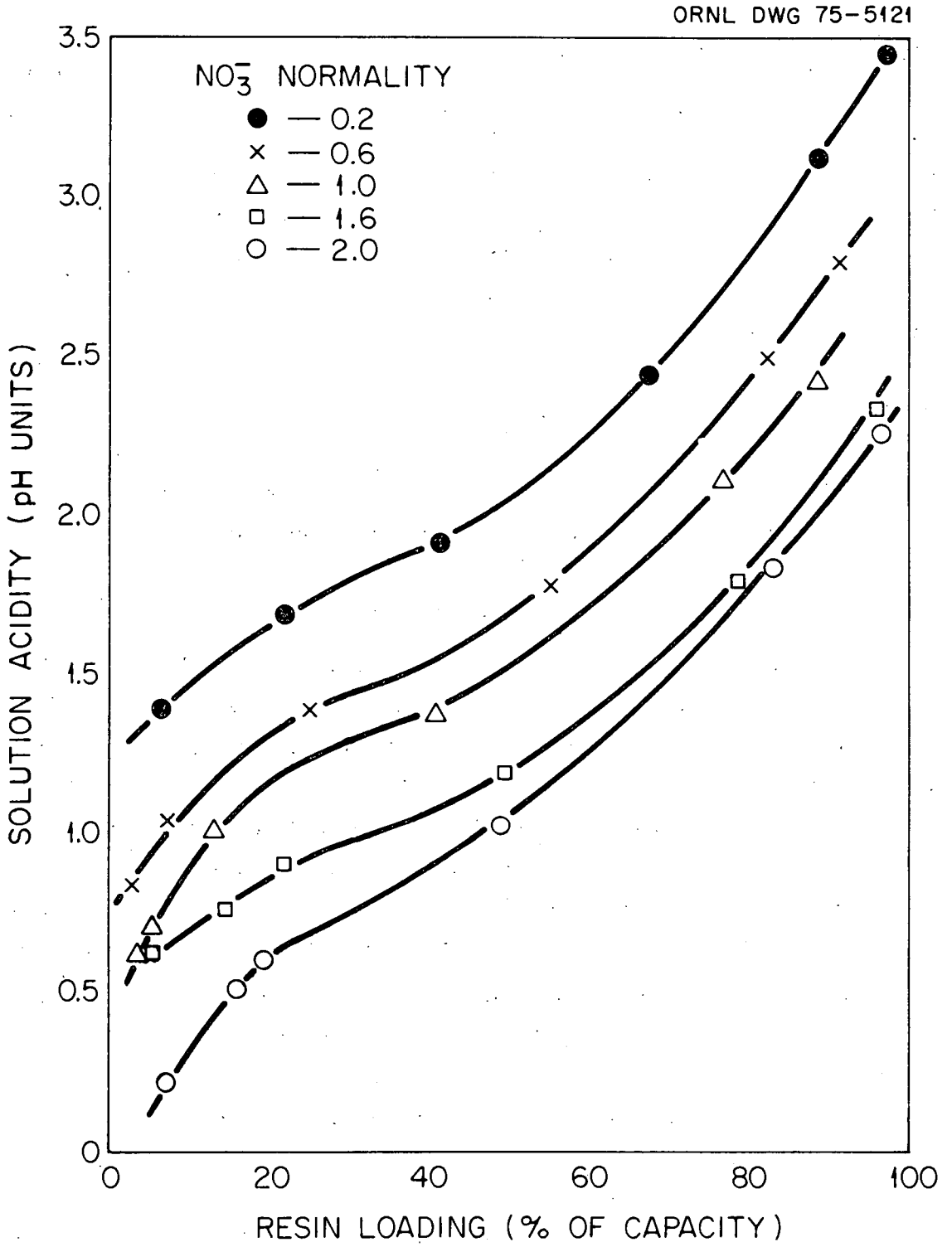

Fig. 2. Uranium loadings vs solution nitrate concentrations and pH.

the resin and the inlet solution were close to equilibrium. This was the second procedure for determining whether loading was complete. Small amounts of uranium loading resulted in significant pH changes. The accuracy for measuring this difference was improved by moving a single pH element between the two streams so that they could be analyzed alternately. This effect could be duplicated by automatic valving in a remotely operated system.

2.2 Nitrate Extraction Equilibrium

The conditions for the nitrate extraction must be controlled in order to avoid overextraction of nitrate and precipitation of UO_3. The precipitation of UO_3 is possible from the known basicity of the amine and has been observed experimentally during investigations of sol preparation flowsheets by Moore.[5] Therefore, the extraction flowsheet conditions were selected so as to provide an excess of the uranyl nitrate solution, with complete conversion of the amine to the nitrate form. The flows were cocurrent so that the amine fed into the contactor would encounter solution of the highest nitrate content. The spray contactor is designed to prevent the formation of small aqueous drops which might suffer from overextraction of nitrate. Although aqueous continuous operation might be more favorable for avoiding local overextraction, the organic continuous mode was used because it was known to provide more effective phase separation. At the normal flow rates and concentrations, 5 to 10% of the inlet nitrate was extracted from the aqueous phase per pass through the contactor. Under the test conditions, precipitation of uranium occurs at a NO_3^-/U mole ratio of about 1.5, the exact value depending on the uranium concentration and the temperature.

When excess nitric acid is present in uranyl nitrate solutions, UO_2^{2+} forms negatively charged complexes such as that shown in Eq. (7) (this example does not mean that a complex of the formula indicated was known to be present):

$$UO_2(NO_3)_2 + 2HNO_3 \rightarrow UO_2(NO_3)_4^{2-} + 2H^+ . \qquad (7)$$

The complex(es) could be extracted by an amine, as shown by Eq. (8):

$$2H^+ + 2R_2'NH + UO_2(NO_3)_4^{2-} \rightarrow [R_2'NH_2]_2UO_2(NO_3)_4 \ . \qquad (8)$$

(As an analogous example, sulfate complexes are extracted by organic amines for recovery of uranium from sulfate solutions.[7]) These uranyl nitrate complexes can be stripped by water or dilute nitric acid and subsequently returned to the uranyl nitrate surge tank. Any uranyl complexes not recovered in this way would be lost to the basic waste solution leaving the amine regeneration step. Measurement and control of such losses were two objectives of the demonstration tests.

2.3 Amine Regeneration

The chemical equilibrium for the regeneration of amine by Eq. (3) or (6) is very favorable so that countercurrent flow or large excesses of base are unnecessary. Conditions previously demonstrated for amine regeneration as part of sol-gel processes were used for these studies.[3,4] Two important considerations are that the aqueous/organic flow ratio is low (about 1/5) and emulsification of organic into the aqueous phase is troublesome when NaOH is present. As a result, the preferred conditions are organic continuous operation and cocurrent flow so that the NaOH is rapidly converted to $NaNO_3$. The aqueous flow rate should be controlled so that all the NaOH is used but only part of the Na_2CO_3 is converted to $NaHCO_3$. A residue of NaOH in the aqueous exit solution results in poor phase separation. In addition, conversion of all the Na_2CO_3 to $NaHCO_3$ may allow undesirable releases of gaseous CO_2 or incomplete regeneration of the amine. Partial regeneration of the amine using less than the stoichiometric ratio of NaOH might have advantages and will be tested in an engineering-scale resin loading system.

3. EXPERIMENTAL APPARATUS AND PROCEDURES

A test system for resin loading based on the solvent extraction of nitrate was assembled by reusing equipment components from other flowsheets

(Fig. 3). The nitrate extraction equipment was the same as that used for preparing CUSP UO_2 sols (Fig. 4), except that the aqueous surge tank was removed and the aqueous phase was discharged through a jackleg to control the interface level.[4] Solvent regeneration was accomplished in three mixer-settler stages (Fig. 5) as designed and fabricated for the sol-gel preparation of ThO_2-UO_3 sols.[3] The resin loading contactor used initially was taken from a fluidized-bed system tested for resin loading using UO_3.[1] Both these components and a second loading contactor, 4 in. ID and 5 ft long, will be described in the following subsections. The UNH tank was a 55-gal stainless steel drum. The uranium feed was prepared by diluting a 1.33 M $UO_2(NO_3)_2$--1.70 M HNO_3 solution with water.

3.1 Nitrate Extraction Components

Uranyl nitrate solution from the UNH tank was pumped through a manual flow control valve, a conductivity element, a temperature element, a small shell-and-tube heat exchanger, a flow element (orifice and differential pressure cell), and a spray header containing holes about 1/8 in. in diameter (Fig. 4). The aqueous drops flowed cocurrently with the continuous organic phase down a 2-in.-ID, 36-in.-long contactor. The aqueous-organic interface was controlled in about a 12-in. length of a 2-in.-ID phase separator by adjustment of organic and aqueous overflow jacklegs. The pH of the aqueous effluent was measured in-line before the stream was returned to the UNH tank.

3.2 Solvent Regeneration

The solvent regeneration contactors may be overdesigned with respect to meeting the flowsheet requirements. Each mixer-settler (Fig. 5) is made of 3-in.-diam glass pipe to permit observation of the process streams and operating characteristics. It is divided into six compartments, each of which has a mixing impeller; these impellers are mounted on a common shaft with a variable-speed drive. The aqueous and organic phases enter at the top and flow cocurrently down through the six compartments to give the effect of mixing vessels in series. This arrangement ensures good stage efficiency. The mixer is designed in such a manner that the aqueous

ORNL DWG 74-6299

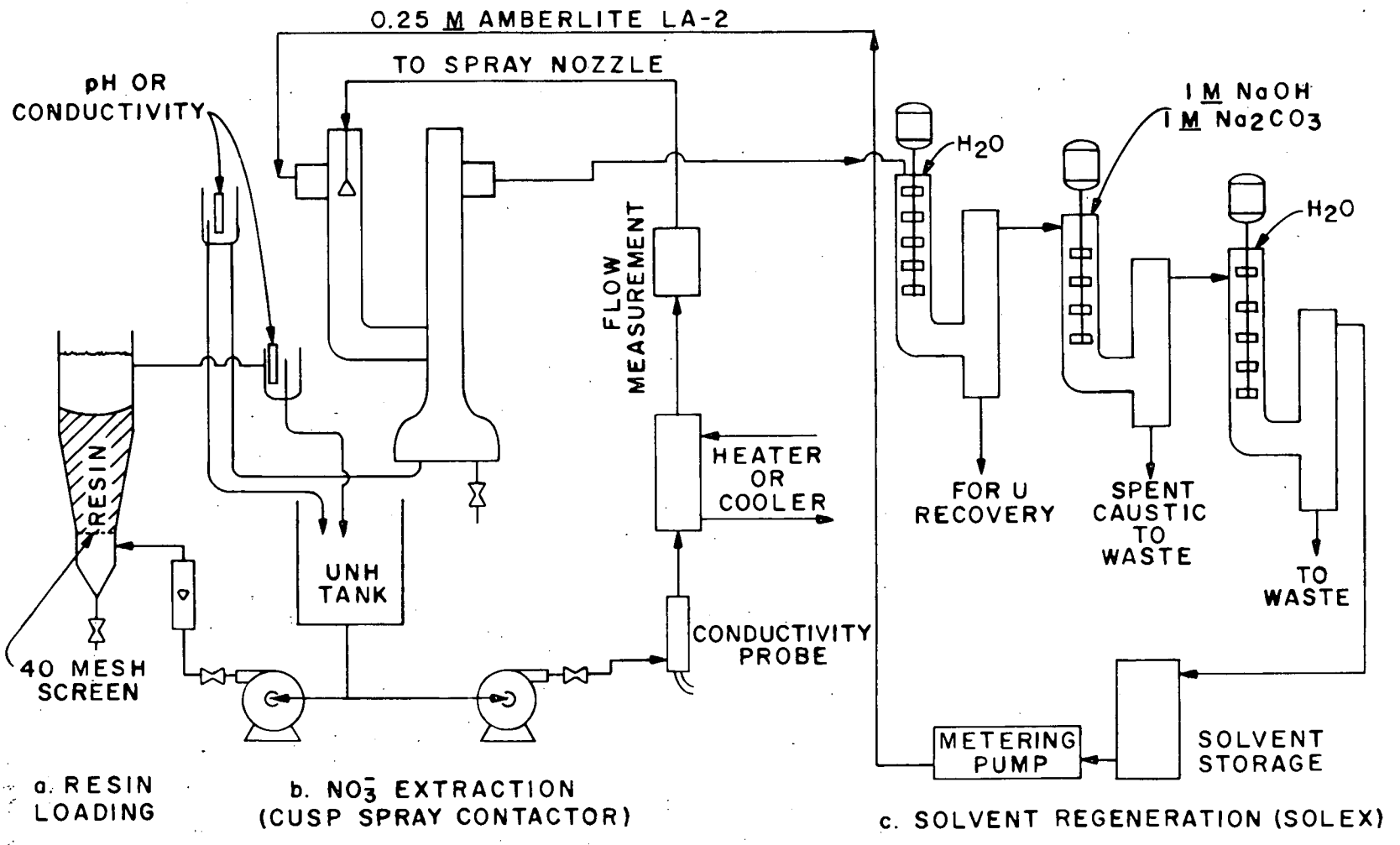

Fig. 3. Schematic equipment flowsheet for test of resin loading with nitrate extraction.

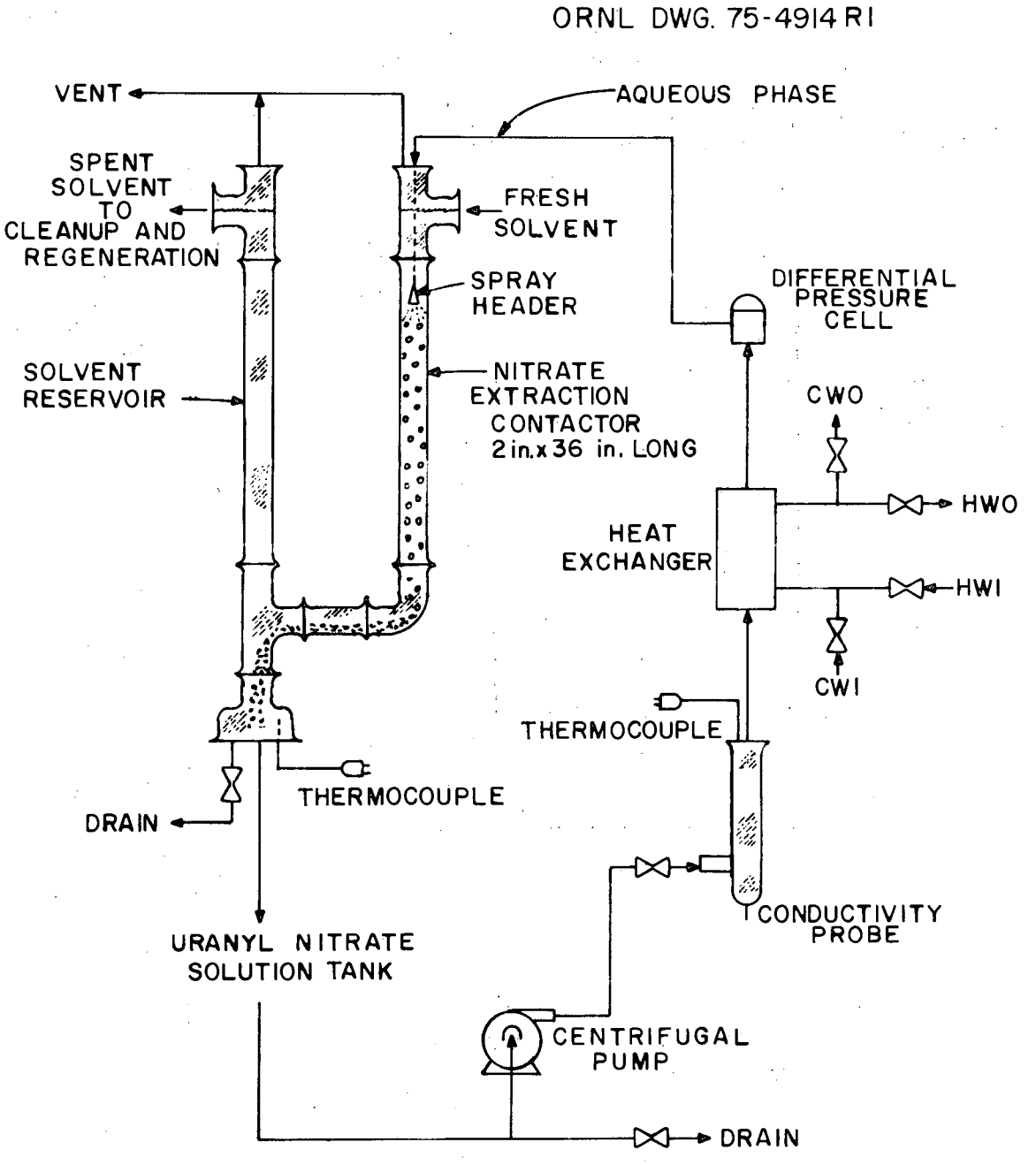

Fig. 4. Nitrate extraction subsystem with spray column contactor.

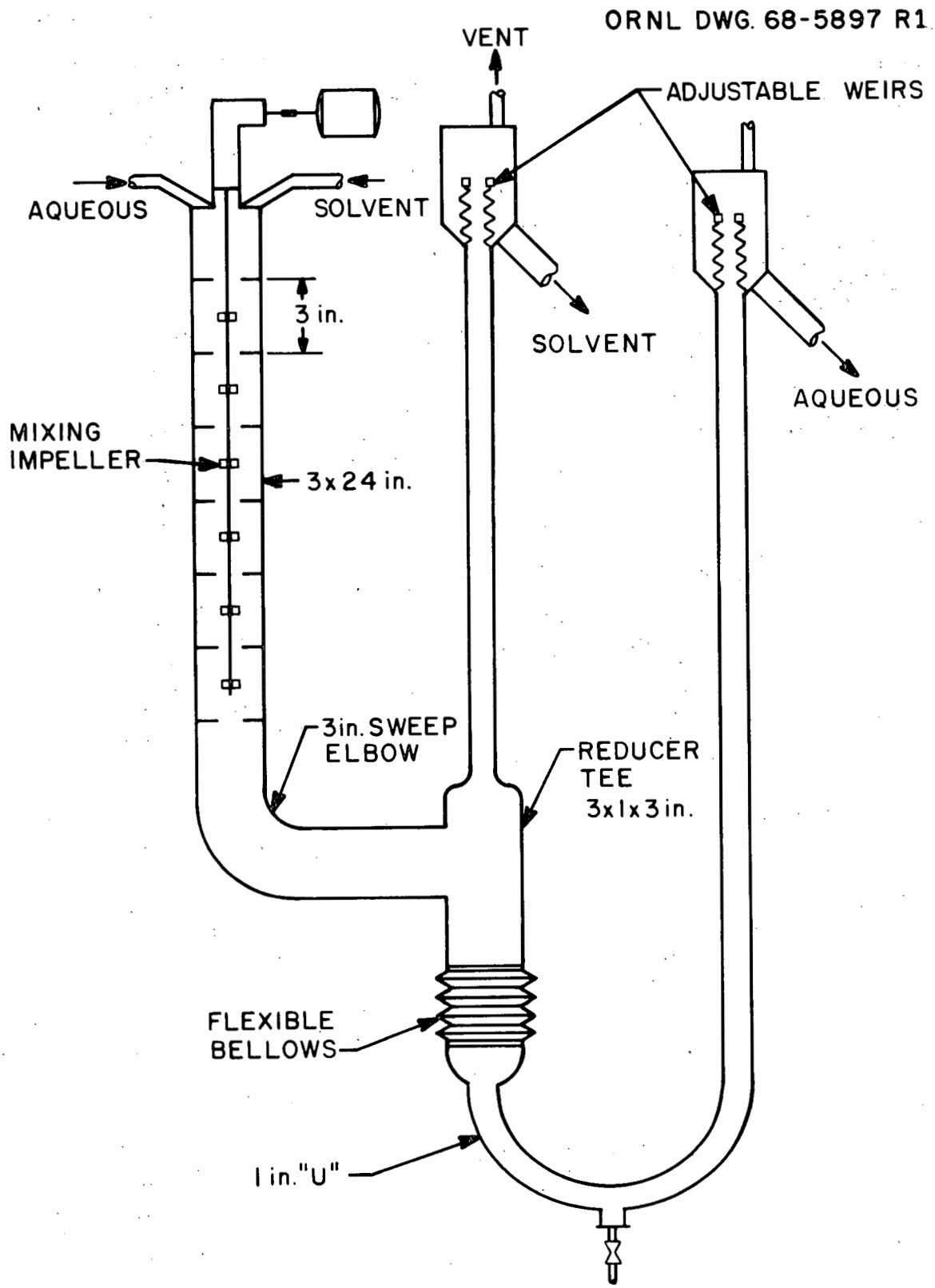

Fig. 5. Mixer-settlers as used for amine regeneration.

phase is dispersed into the organic phase (organic continuous) to minimize emulsification. At shutdown, the aqueous phase drains to the settler; consequently, only the organic phase is present in the mixer at startup and the aqueous stream is easily dispersed as it enters. Each mixer is equipped with two U-shaped sections of stainless steel tubing through which hot water is circulated to maintain the organic and aqueous phases at about 50°C.

Phase separation occurs in the section located below the mixer. The position of the interface is controlled by adjustable weirs on both the aqueous and the organic overflow lines. The nominal volumetric capacity of the mixing section is 2.0 liters, while that of the settler is 2.8 liters of organic phase and 1.5 liters of aqueous phase.

3.3 Resin Loading Contactors

The resin loading contactor used initially in the tests reported here was a fluidized-bed unit with the resin supported by a 40-mesh screen mounted in a 3-in.-ID flanged joint [Fig. 6(a)]. The resin filled a tapered section (decreasing from 6 in. ID to 3 in. ID over a 12-in.-length) and part of a 6-in.-ID by 24-in.-high cylindrical section. The acid-deficient uranyl nitrate solution from the UNH tank was pumped successively through a manual flow control valve, a rotameter, and the resin via the 40-mesh screen. The pH of the aqueous effluent was measured in-line before the stream was returned to the UNH tank. In some tests, the pH of the aqueous feed was measured by a similar in-line measurement of a second stream.

Resin loading tests were also made after the fluidized-bed contactor had been replaced by a 4-in.-ID by 5-ft-high spouting bed contactor [Fig. 6(b)]. The contactor body was made of standard Pyrex pipe. The bottom was a 60° sheet-metal cone with a 1/2-in.-OD tubing inlet at the top. The top was a flange with a 100-mesh wire screen fabricated into a 60° cone to prevent carryover of resin. This contactor was intended to simulate a critically safe geometry and a remotely operable loading-unloading configuration.

ORNL DWG. 75-4916

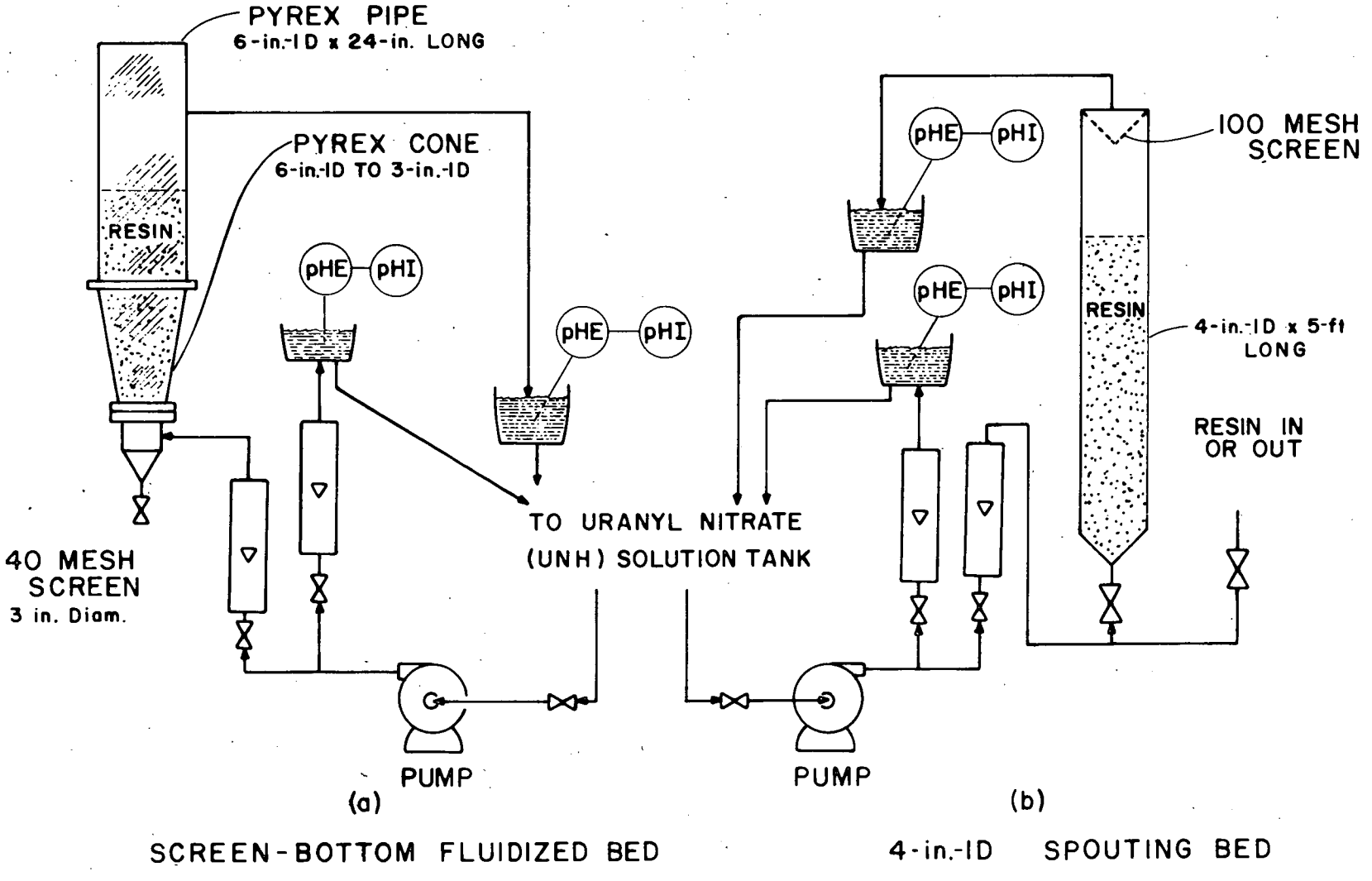

SCREEN-BOTTOM FLUIDIZED BED 4-in.-ID SPOUTING BED

Fig. 6. Two types of resin loading contactors.

4. EQUIPMENT PERFORMANCE

The objective of the studies described here was to demonstrate acceptable chemical and equipment flowsheets for this resin loading process without any systematic optimization. Potential problems such as solvent entrainment, uranium losses to the regeneration contactor, and loading time requirements were investigated as required to show acceptable results. Alterations of equipment or flowsheets to further improve such results were generally deferred to be part of future studies in an engineering-scale resin loading system. Results are described according to the mechanical performance of the equipment in this section; the chemical flowsheet requirements, including the quantitative results with respect to uranium loading, losses, etc., are discussed in Sect. 5.

4.1 Nitrate Extraction Contactor

The nitrate extraction contactor was a cocurrent spray column with the organic phase (0.27 M Amberlite LA-2 in a diethylbenzene-dodecane mixture) continuous. Operation proceeded as intended; no important problems were encountered. The exit amine was $\leq$ 0.01 M free amine, indicating essentially complete conversion to the amine nitrate. The interface was present in a $\sim$ 12-in. length of horizontal, 2-in.-ID Pyrex pipe. There were visible accumulations of organic in the uranyl nitrate solution tank, but they had no detectable effect on resin loading. A more efficient phase separator design would facilitate control of the interface and reduce entrainment. In most cases, operation was with an organic flow of 400 cc/min. Operation with an organic flow of 600 cc/min was considered acceptable; however, phase separation and interface control were not as good as at 400 cc/min.

4.2 Amine Regeneration System

The only difficulties encountered in operating the amine regeneration system were those associated with phase separation when abnormal chemical flowsheet conditions were employed. The $NaOH-Na_2CO_3$ solution flow rate must be controlled so that complete conversion of the NaOH to $NaNO_3$ is

ensured. Several periods during which the organic flow rate was reduced without a concomitant decrease in the $NaOH-Na_2CO_3$ flow rate resulted in accumulations of emulsions at the interfaces. Another abnormal chemical flowsheet condition was precipitation of uranium in the regeneration contactor and its attendant accumulation at the interface. This condition, which occurred in the case of high NO_3^-/U ratios (see Sect. 2.2), was completely controlled by adding a water scrub to recover the extracted or entrained uranium. The mixer speeds commonly used were 500 rpm for the uranium recovery scrub contactor, 350 rpm for the regeneration contactor, and 400 rpm for the final water scrub.

The mixer-settler contactors provide good dispersion of the aqueous phase as required for the low aqueous/organic flow ratios of 1/5 or 1/15. Since the chemical equilibrium is very favorable, an aqueous recycle could be used to increase the aqueous/organic flow ratio (Fig. 7). This would allow the use of spray contactors and might promote other process improvements. The energy for mixing would then be provided by the recycle pump instead of the mixer motor. The aqueous recycle flow would allow measurement and control of the amount of base in the contactor to optimize both the utilization of base and the phase separation.

All of the integrated system tests were made with equimolal concentrations of NaOH and Na_2CO_3 to regenerate the amine. Use of NH_4OH to give $NH_4NO_3-NH_4OH$ waste might be preferred for some waste disposal treatments. A literature survey was made and some simple laboratory tests were performed to provide information on the use of NH_4OH solutions. Uranium separation processes have been developed which require the regeneration of free amines after stripping of uranium complexes to leave the amines as nitrate, sulfate, chloride, or other salts. A flowsheet featuring nitrate stripping of uranium yields an amine nitrate and has almost exactly the same amine regeneration requirement as that for resin loading.[7] For a secondary amine (dodecenyl Primene 81*) in kerosene, the amine was regenerated with 1.5 M NH_4OH to give an aqueous effluent pH of 8.3. As compared with NaOH, the use of NH_4OH required some combination of a larger excess of base, higher temperatures, and/or longer contact times.[7]

---

*Trademark of the Rohm and Haas Co.

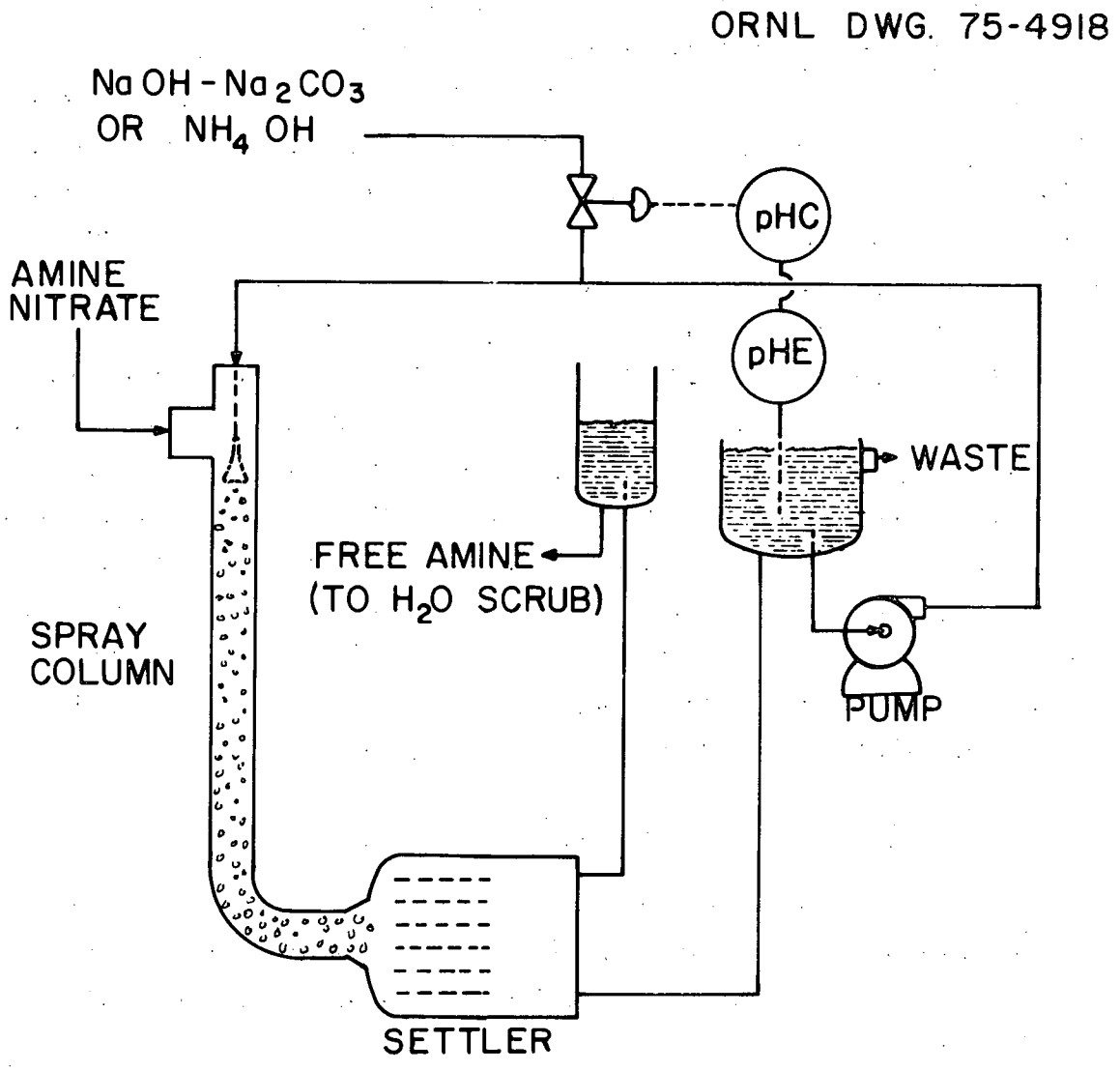

THE pH MEASUREMENT COULD BE EITHER A PROPORTIONAL CONTROL OR A HIGH-AND LOW-LEVEL ALARM WITH A METERED FLOW OF NH_4OH SOLUTION.

Fig. 7. A recycle system for an amine regeneration contactor.

Laboratory tests with NH_4OH were made by shaking spent solvent with aqueous solutions in glass sample bottles. The visual observation of break times or emulsion formation was a test of phase separation. Phase separation is known to be very poor for NaOH solution, but is excellent for Na_2CO_3 or $NaHCO_3$-$NaNO_3$ solutions. The organic samples from several shake tests were submitted for analyses of free amine in order to determine the equilibrium amine nitrate concentrations resulting from NH_4OH-NH_4NO_3 solutions. The results of these analyses were identical for organic samples that had been shaken with 1 M Na_2CO_3, 1 M NH_4OH, and the two NH_4OH-NH_4NO_3 solutions; this indicates negligible back-conversion to amine nitrate by the NH_4NO_3. The phase separation for NH_4OH-NH_4NO_3 solutions, although not quite as good as for Na_2CO_3 or $NaHCO_3$-$NaNO_3$ solutions, is much better than for NaOH or NH_4OH solutions. The phase separation using NH_4OH should be acceptable if low NO_3^-/NH_4^+ ratios in the effluent are avoided. This does not imply a difference in limitations since we have also experienced emulsion problems at low NO_3^-/Na^+ ratios. An aqueous recycle for the regeneration contactor (Fig. 7) could be a worthwhile process improvement when NH_4OH is used for regeneration.

4.3 Resin Loading Contactor

Two types of resin loading contactors (Fig. 6) were used in the present studies. The principal information with respect to their operation was the allowable range of solution flow rates and the ease of transferring resin in and out.

Retention of the resin in the loading contactor is an important consideration, and a screen or filter must be installed at the solution exit for this purpose. Air bubbles that contact resin often trap some resin particles at the bubble surface and transport them to the top of the liquid by a froth flotation effect. The unloaded hydrogen-form resin has a low density and will float at moderate uranium concentrations (estimated to be > 0.8 M). As UO_2^{2+} is loaded, the density of the resin increases greatly to give significantly higher settling velocities. Even for a uranium concentration of 0.3 M, however, the settling velocity

of unloaded resin is low and resin is easily carried to the solution exit. The allowable solution flow rate for 0.3 M uranium (70 g of uranium per liter) is a superficial velocity of 15 cm/min. This can be increased to 50 cm/min after loading is 70% complete. In the case of the 4-in.-ID loading contactor, the conical 100-mesh screen for the liquid exit did not allow trouble-free use of high solution flow rates. If the average solution flow rate proposed for the FRPP is used at the start, the low-density, unloaded resin is packed against the exit screen and forms a porous plug which has sufficient strength to cause difficulties. The plug remains in place when the solution flow is shut off. For this contactor and the resin charges tested, the allowable initial flow rate without expanding the resin bed up to the screen is about 1.2 liters/min, or about 30% of the proposed average flow rate. The increased resin density as loading proceeds allows a flow rate of 4 liters/min within 1 hr. The 100-mesh screen cone at the top gradually blinded with resin and collapsed after four runs from an excessive pressure differential. Some arrangement to provide backflushing and/or a larger area might eliminate this problem. Criticality requirements will probably allow use of a 5-in.-ID contactor, which would represent a significant improvement.

Each loading contactor exhibited good mixing and hydraulic behavior. The lower part of the resin bed in the 4-in.-ID loading contactor with the conical bottom showed a spouted-bed behavior characterized by downflow at the vessel walls, while the upper part of the resin bed displayed the more conventional type of fluid-bed motion. The other loading contactor showed smooth fluidization in the 6-in.-ID cylindrical section but slugging fluidization in parts of the bottom tapered section.

The loaded resin was easily transferred out of each type of loading contactor. About 3 ft of liquid head in the conical-bottom contactor flushed the resin through a 1/2-in.-OD tubing line to the dryer. The rate of resin discharge was increased if the slurry was diluted by a small additional flow of solution. In the case of the screen-bottom loading contactor, vacuum was applied to the top of the dryer to draw the resin slurry into the dryer through a 1/2-in.-OD tubing line.

Fluidization flows may be terminated and then resumed after shutdowns of up to several days with no difficulty, provided the resin bed is not allowed to fill any appreciable length of the solution inlet line. The resin in the small line cannot flow into the contactor until the bed has expanded. The resin-filled line has a high pressure drop per unit of length and can limit the solution flow to a low value which will not expand the bed. This problem was eliminated by using a flow shutoff valve close to the solution inlet to the contactor so that only a few inches of line could fill with resin when flow was discontinued. This difficulty with moving the resin in the line occurs only when the settled resin bed blocks the discharge of resin from the line.

4.4 Process Instrumentation and Control

All controls for the experimental system used in these tests were activated manually after visual observations had been made or indicators had been read. The system response times are generally long; therefore, the principal problems appear to stem from the sensitivity and accuracy of the measurements. Since none of the flow measurements or temperatures is critical, conventional instrumentation would be adequate. Interface controls were of the jackleg type, with adjustable weirs in each aqueous and organic exit line. The major problem with regard to interface control is the effect of variations in uranium concentration on the nitrate extraction interface level. The difference in density between the two phases can vary by as much as a factor of 2 since the density of the uranium solution may range from slightly more than 1.0 for dilute solutions to 1.20 for concentrations of about 0.6 M (as compared to about 0.9 for the organic density).

Testing of in-line pH instrumentation in an engineering-scale resin loading system will be a very important part of the overall program. Accurate pH measurements provide an excellent indication of the progress of both the nitrate extraction and the resin loading. In the experimental studies reported here, conventional laboratory pH electrodes and indicators were used, with manual handling of the electrodes for calibration or use in in-line solution chambers. These laboratory instruments required

frequent calibration (several times per 8-hr shift). It is essential, then, that future studies identify dependable components for in-cell use. The accuracy of measuring the pH change across the loading contactor was improved by moving a single pH meter between the inlet and exit streams so that these streams could be analyzed alternately. Automatic valving with duplicate in-line pH instruments is planned to provide a double check of this important measurement. As an alternative to introducing standard buffer solutions into the process system, the process solutions might be used for calibration after their pH values had been measured in an analytical facility.

An in-line conductivity element was used to determine the conductivity of the uranyl nitrate solution. This element was fouled (probably by entrained organic) during one early run and had to be cleaned. The reading obtained with this element was verified by a portable laboratory cell and probe placed in the same solution pots used for pH measurements. With the exception of the fouling mentioned above, the in-line conductivity element appeared to be reliable. The conductivity of the acid-deficient uranyl nitrate is strongly dependent on temperature and uranium concentration and is, therefore, a much less useful measurement than pH for determining NO_3^-/U mole ratios.

5. CHEMICAL FLOWSHEET AND QUANTITATIVE RESULTS

The data obtained in the chemical flowsheet studies are presented in this section. In cases where the initially selected conditions gave acceptable results, they were used without any systematic determination of optimum values. The mechanical performance and dependability of the equipment items are discussed in Sect. 4.

5.1 Run Conditions and Analyses of Loaded Resin

Fourteen batches of resin were charged and loaded without any problems. The important run conditions and results, along with those of some batch runs with UO_3 which are presented for comparison, are summarized in Table 1. The low uranium loadings for runs R02, R09, and R14 were

Table 1. Loading of natural uranium on Amberlite IRC-72 resin

Run number	Resin feed: Size[a] (μ)	Resin feed: Volume[a] (ml)	Loaded resin: Weight (g)	Loaded resin: U content (wt %)	Loaded resin: meq U / ml resin	Final solution: U conc. (M)	Final solution: pH	Final solution: NO_3^-/U mole ratio	Loading time (hr)
A. Loading with Solvent Extraction of Nitrate; Screen-Bottom Spouting-Bed Contactor									
R01	Unsized	4,800	3,871	46.77	3.17	0.31	2.65	1.78	3.3
R02	Unsized	7,050	5,392	46.26	2.97	0.32	2.60	1.81	2.5
R03	Unsized	5,900	4,813	46.06	3.16	0.25	2.85	1.70	5.8
R04	Unsized	6,700	5,430	46.03	3.13	0.17	3.05	1.67	4.7
R05	590 ± 100	7,450	5,826	46.40	3.05	0.24	2.88	1.71	4.9
R06	590 ± 100	7,350	5,954	46.87	3.19	0.23	2.94	1.70	5.8
R07	590 ± 100	7,200	5,668	46.08	3.05	0.22	2.84	1.75	5.3
R08	590 ± 100	8,100	6,335	47.83	3.17	0.21	2.90	1.70	4.5
R09	590 ± 100	7,400	5,410	46.0	2.83	0.15	2.98	1.73	1.8
R10	590 ± 100	5,000	3,944	46.61	3.09	0.10	3.18	1.66	2.0
B. Loading with Solvent Extraction of Nitrate; Conical-Bottom, 4-in.-ID Spouting Bed Contactor									
R11	560 ± 60	8,100	6,173	49.66, 49.96	3.18	0.22	2.88	1.74	3.7
R12	560 ± 60	8,500	6,394	49.57, 49.50	3.13	0.16	2.93	1.74	4.1
R13	560 ± 60	8,400	6,273	47.74	3.00	0.09	3.10	1.73	4.6
R14	560 ± 60	7,800	5,465	46.14	2.72	0.03	3.15	1.82	5.6
C. Loading with UO_3 in a Large (55-gal Drum) Conical-Bottom, Spouting-Bed Contactor									
B02	560 ± 60	33,000	25,570	48.2	3.14	0.22	3.0	1.65	7
B04	660 ± 30	22,000	16,955	48.9	3.16	0.22	3.15	1.55	8
B05	560 ± 60	38,000	28,780	48.0	3.07	0.22	3.1	1.6	7
D. Loading with UO_3 in Baffled, Agitated Beakers									
62	Unsized	8,170	6,530	47.00	3.16	0.4	3.0	1.5	2.5
63	Unsized	8,340	6,721	46.35	3.14	0.4	3.1	1.5	3.0

[a] Resin sizes and volumes are given for the hydrogen form in water.

not unexpected since either shorter loading times or lower uranium concentrations were being tested in these cases. Table 2 shows a typical run data sheet.

5.2 Integrated System Rates

The resin loading tests were made with simultaneous removal of uranyl ion by reaction with the resin [Eq. (1)] and removal of nitrate by the amine solvent [Eq. (2)]. The rate of nitrate removal is set by the amine concentration and flow rate since the exit solvent contains little free amine. The rate of uranyl removal varies with the concentration and flow rate of solution to the loading contactor and with the degree of resin loading. These removal rates, along with the volume and concentration of the uranyl nitrate solution, determine how the pH and NO_3^-/U mole ratios vary as the resin loading proceeds. Continuous removal of water in an evaporator and addition of uranyl nitrate feed solution during loading would further complicate the behavior in a FRPP system of low volume inventory.

A typical loading run showed two distinct stages for the experimental conditions used. Initially, the rate of uranium loading was much higher than the rate of nitrate removal. The exit stream from the loading contactor has a low pH, and the pH of the solution in the surge tank decreased (Figs. 8 and 9) as the NO_3^-/U mole ratio increased with time. About 70% of the uranium loading was completed in about 20% of the run time. During the remainder of the run, the rate of nitrate extraction was larger than the rate of uranium loading. The pH of the surge tank slowly increased as the NO_3^-/U ratio decreased; the pH of the solution leaving the loading contactor increased more rapidly and approached the pH of the inlet solution as loading neared completion.

The consistency of the observed results can be checked by making several comparisons. The uranium loading rate per volume of solution can be calculated from information obtained by several independent methods:

(1) Uranium analyses of solutions entering and leaving the loading contactor.

Table 2. Data sheet for run R11

Flow rates: organic, 400 cc/min; 1 M NaOH--1 M Na_2CO_3, 80 cc/min; water scrubs (two), 30 cc/min; uranyl nitrate solution to nitrate extraction, 3 liters/min

Clock time	Measurements of solution: From tank T (°C)	From tank pH	From tank Density (g/cc)	From resin T (°C)	From resin pH	From resin Density (g/cc)	Flow through resin (liters/min)	Expanded resin bed volume (liters)	Remarks
0930	32	2.75	1.100	--	--	--	0	8.20	NO_3^- extraction started
0940	34	2.82	1.100	--	--	--	0	--	--
0950	36	2.80	1.098	--	--	--	2.4	--	Flow to resin
0953	--	--	--	16	1.00	1.052	2.4	> 12	Resin on exit screen
0956	--	--	--	24	0.97	1.056	2.4	> 12	--
1000	--	--	--	30	0.95	1.058	2.4	> 12	Bed $\Delta P \sim 1$ ft H_2O
1004	38	2.84	--	36	0.98	--	2.4	~ 10	--
1010	--	--	--	37	1.10	1.059	2.4	~ 10	--
1015	40	2.82	1.092	38	2.12	1.066	2.4	~ 9	Bed $\Delta P \sim 1$ ft H_2O
1020	--	--	--	38	2.42	1.069	4	--	--
1025	--	--	--	39	2.60	--	4	--	Bed $\Delta P \sim 2$ ft H_2O
1030	--	--	--	39	2.57	1.072	4	--	--
1035	40	2.70	1.080	39	2.57	1.074	4	9.80	--
1045	41	2.73	1.077	40	2.62	1.075	4	--	--
1100	41	2.72	1.077	40	2.65	1.074	4	9.70	--
1130	43	2.71	1.076	43	2.65	1.072	4	--	--
1200	45	2.74	1.072	44	2.70	1.071	4	9.10	--
1230	46	2.75	1.072	46	2.78	1.070	4	--	--
1300	47	2.80	1.070	47	2.81	1.069	4	9.08	--
1330	48	2.89	1.068	47	2.88	1.067	4	--	Flows terminated
Post-run	14	--	1.076	--	--	--	0	8.10	--

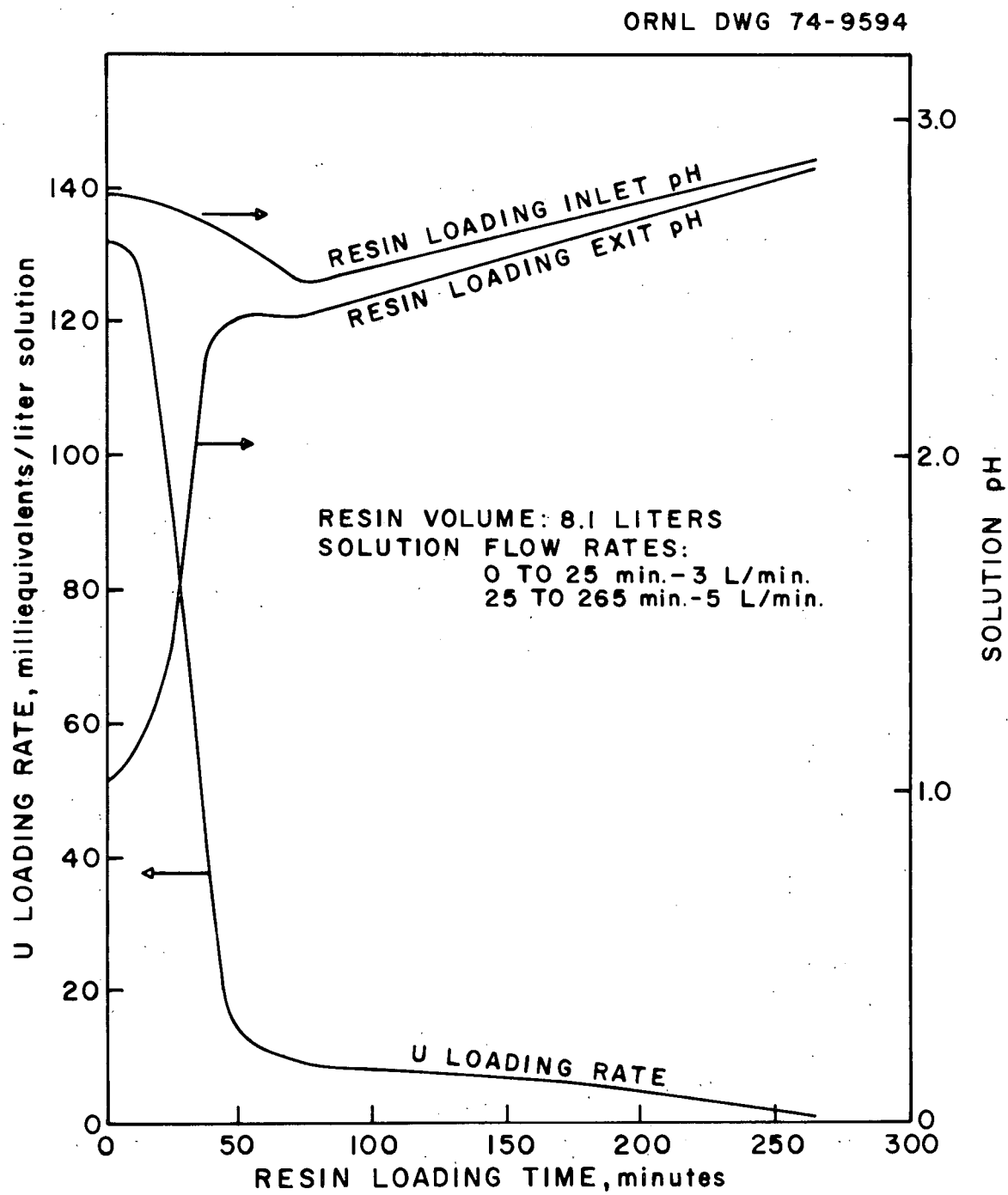

Fig. 8. Observed pH values and calculated uranium loading rates for run R08.

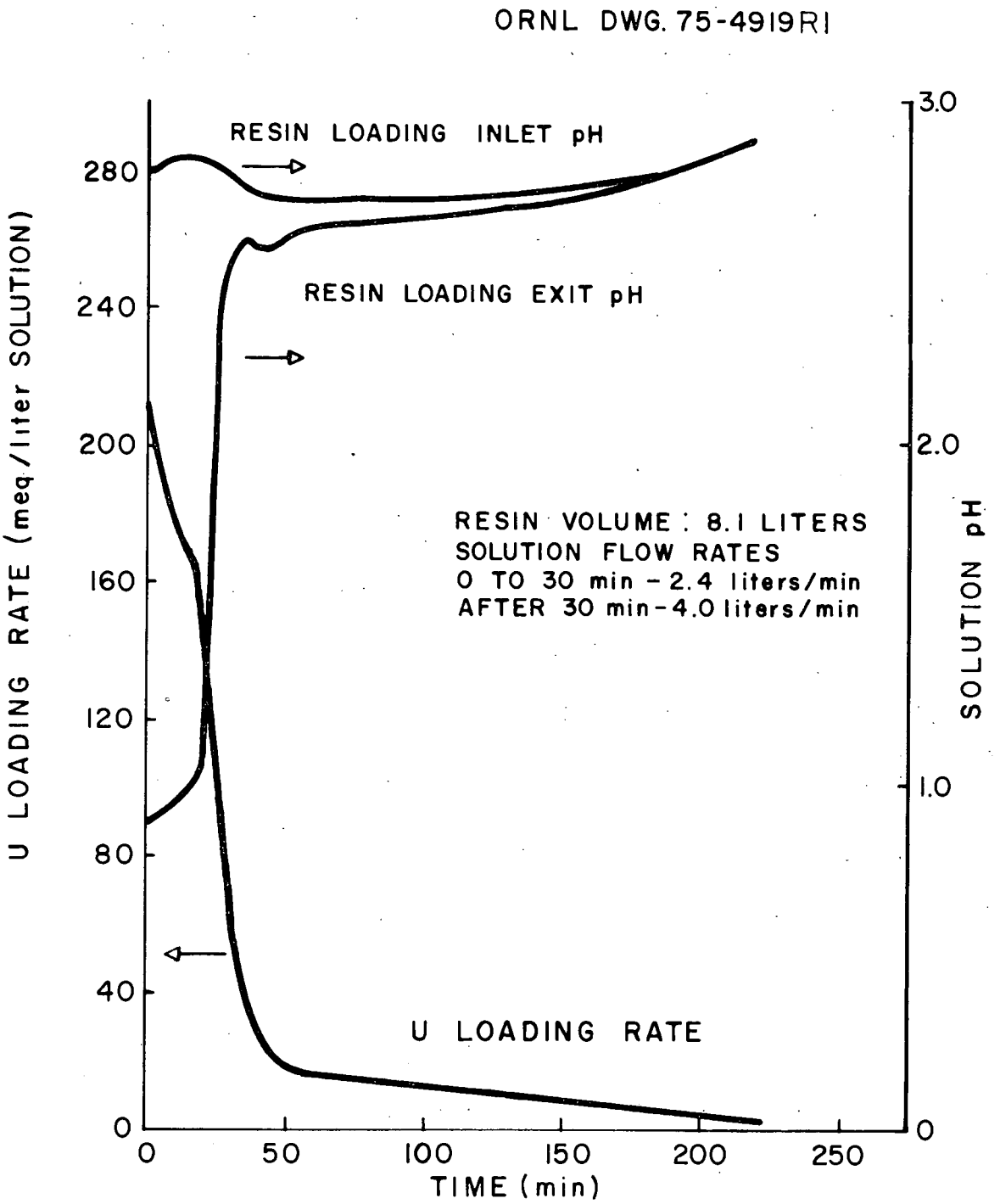

Fig. 9. Observed pH values and calculated uranium loading rates for run R11.

(2) Density measurements (via hydrometer) of solutions entering and leaving the loading contactor.

(3) pH measurements of solutions entering and leaving the loading contactor, along with an approximate NO_3^- or uranium concentration and data concerning solution pH vs NO_3^-/U ratio, such as that shown in Fig. 10.

(4) Rate of change for the average uranium concentration in the system and the solution volume.

The uranium loading rate shown in Fig. 8 for run R08 was determined from pH measurements of the inlet and exit solutions. The density measurements confirmed the portion of the curve corresponding to the initial high loading rate, but they were not sensitive enough to give accurate values for the small differences for the remainder of the run. The large number of uranium analyses required to establish two curves for each run did not seem justified; thus only a few points were confirmed by chemical analyses. The behavior of the uranyl nitrate tank was intermediate between uniform mixing and plug flow, and samples to indicate true average concentrations could be taken only after mixing, with little or no removal or addition of uranium.

The amounts of uranium found in the dried resin agreed with the product of the integrated values for uranium loading rates and the solution flow rate to within $\pm$ 20%, which is reasonable considering the many approximations involved. The difference in pH values for the inlet and exit solutions appeared to be the most sensitive measurement for the low loading rates as loading approached completion, and this is the most important part of the loading run with respect to process control.

5.3 Uranium Losses

Three uranium loss or waste problems were considered during this test program:

(1) Losses of uranium to the waste solutions from the amine regeneration system.

(2) The operating inventory or "heel" remaining after the final loading at the end of a campaign with one batch of ^{233}U feed.

ORNL DWG 74-6300RI

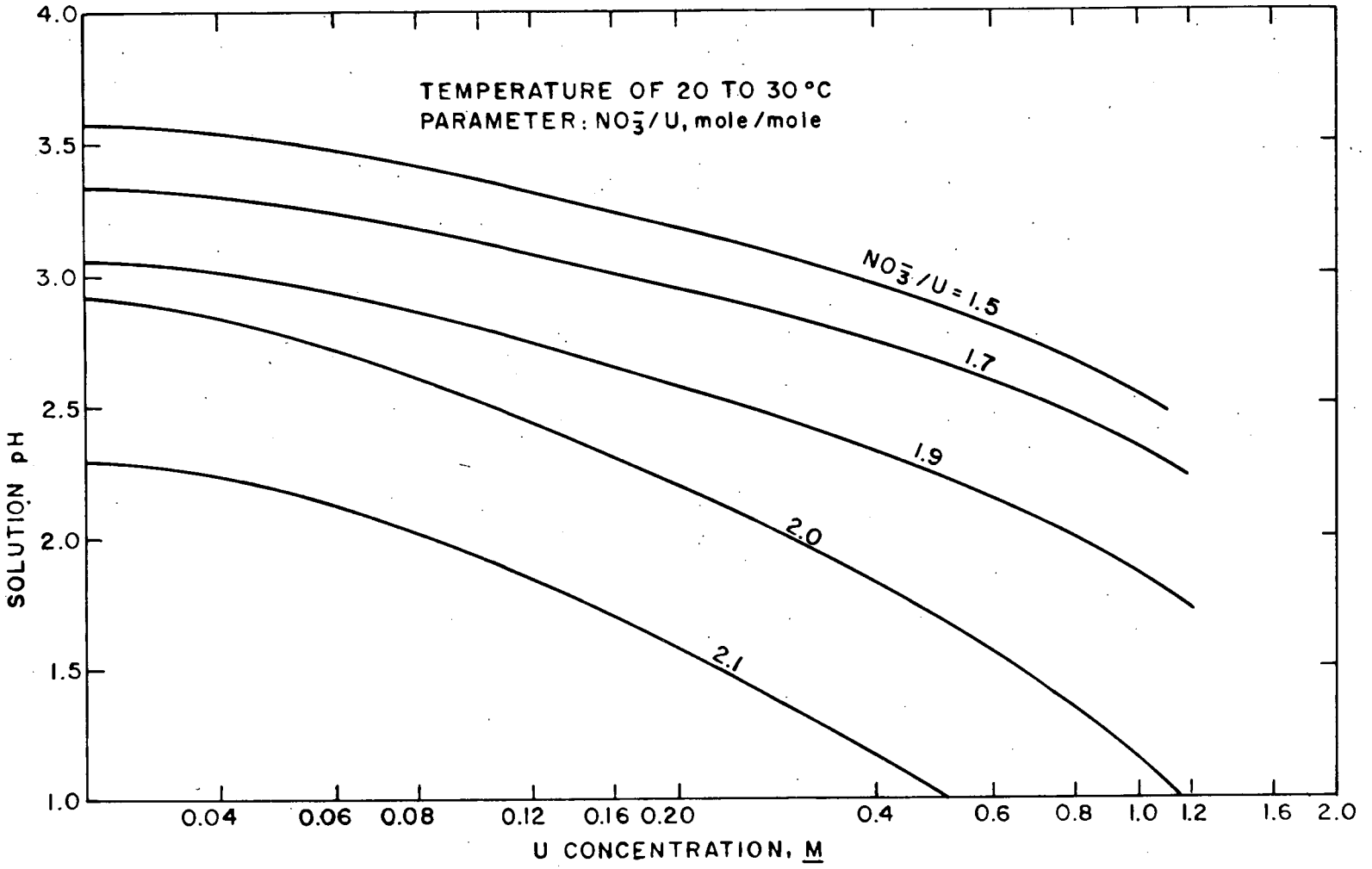

Fig. 10. Measured pH values for uranium nitrate solution vs NO_3^-/U mole ratios.

(3) The amount of waste resin to be expected from off-specification loading runs, or other unacceptable results.

Only the first problem can be identified on the schematic flowsheet (Fig. 1) for the process. Since the operation of evaporators is well established, uranium losses to the condensate should be low. The uranyl ion is not volatile at the flowsheet temperatures, and drying of washed, uranyl-loaded Amberlite IRC-72 does not appear to result in noticeable amounts of particulates; therefore, the off-gases do not result in significant uranium losses. Because these two losses should be negligibly small for a well-designed system, we eliminated condensate or dryer losses as possible controlling problems.

Uranium can be carried with the organic leaving the nitrate extraction column either in the form of entrained drops or as nitrate complexes [see Eq. (8)]. Either type of loss can be controlled by a water scrub which is returned to the uranyl nitrate tank or evaporator (Figs. 1 and 3). The spray column generally showed a relatively clean interface. However, the water scrub should be used to recover extracted uranium even if entrainment fails to occur. The amount of uranium found in the organic was strongly dependent on the aqueous NO_3^-/U mole ratio (see Table 3). It is possible that the uranium may have been entrained in the case of the lowest NO_3^-/U mole ratio (1.8); however, the larger amounts for NO_3^-/U ratios of 2.4 and 3.3 were primarily extracted. The analyses of the aqueous exit streams for the amine regeneration system shown in Table 4 indicate uranium losses of 2 g or less for a uranium loading of 2 to 3 kg.

A recycle fuel fabrication plant will be operated for defined periods called campaigns, with cleanout and inventory of the uranium being accomplished during the interval between campaigns. Therefore, any uranium remaining after the last loading of specification product will require special handling and storage. Runs R11 through R14 were carried out with successively smaller uranium concentrations, decreasing to 0.033 M at the end of R14. Loading proceeded as would be expected, with larger solution volume flows required at the lower concentrations. These results

Table 3. Uranium in the organic phase after nitrate extraction

Organic = 0.27 M Amberlite LA-2 in diethylbenzene

Aqueous = ∿ 0.6 M U

Aqueous-phase NO_3^-/U mole ratio	Uranium extracted (moles/mole NO_3^- extracted)
3.3	> 0.1
2.4	0.02, 0.02
1.8	∿ 0.002

Table 4. Uranium concentrations in amine regeneration system effluents

Organic: 400 cc/min of 0.27 M Amberlite LA-2 in diethylbenzene

	Water scrub for uranium recovery	$NaNO_3$-$NaHCO_3$-Na_2CO_3	Water scrub for sodium removal
Nominal flow, cc/min	30	80	30
R03: Total volume, liters	12	20.5	13.3
U conc., g/liter	1.25	0.105	0.058
R04: Total volume, liters	6.6	17	7.5
U conc., g/liter	0.551	0.035	0.012
Na conc., g/liter	--	--	2.04
R05: U conc., g/liter	1.86	0.045	--
R06: U conc., g/liter	1.31	--	--
R07: U conc., g/liter	1.16	--	--
U conc., g/liter, for:			
NO_3^-/U = 2.5	6.1	--	--
NO_3^-/U = 2.1	1.6	0.124	0.045
NO_3^-/U = 1.9	3.2	--	--

indicate that the uranium inventory can be reduced to much less than the equivalent of one batch (4 kg of uranium) if additional time is allowed for this final batch. The system can be designed to allow collection of all remaining uranium in the evaporator and subsequent evaporation to the minimum volume or maximum concentration that is practical for evaporator operation.

These tests did not reveal any reasons to anticipate the preparation of off-specification resin for waste recycle. The resin loading reactions involve relatively slow approaches to equilibrium without the presence of or formation of UO_3 in the loading contactor. The loading process is controlled from the time loading begins until the desired end point is reached. Therefore, the probability of producing off-specification loaded resin will be determined by the probabilities of off-specification feeds (resin or uranyl nitrate) and gross failures of equipment and/or procedures. The dependability of in-line pH measurements is apparently the most significant uncertainty with regard to equipment components.

Careful determination of uranium material balances and losses will be an important part of the operation of an engineering-scale resin-loading system. Although the measurements made during the studies reported here are not sufficiently accurate to meet the requirements for operation with ^{233}U, they did not show any unexpected difficulties. Uranium material balances for two resin loading runs (RO3 and RO4) were good (96.9 and 101% respectively), but the NO_3^- material balances were rather poor (90.1 and 118.4%). The amounts of uranium recovered in the water scrub solutions were 0.68 and 0.15% of that loaded on the resin batches. Run RO3, which gave the 0.68% value, was characterized by a higher initial NO_3^-/U mole ratio as well as a higher uranium concentration. For runs R11 through R14, the analyses show 13,480 g of uranium charged as uranyl nitrate, 11,712 g in the dried, loaded resin, and 1,950 g in 170 liters of uranyl nitrate at the end of run R14. This gives a uranium material balance of 101.4%, excluding uranium losses.

5.4 Kinetics of Resin Loading

A large fraction of the resin loading can take place very rapidly, while the final 10% of the loading appears to proceed at an even slower rate than would be expected from the less-favorable equilibrium. The rates for the rapid part of the loading are probably controlled by mass transfer requirements. The decreased loading for R09 (Table 1) is believed to be due to the reduced run time even though the exit solution had had a favorable composition for more than 30 min.

Experiments were carried out to determine the rates of uranium loading for hydrogen-form Amberlite IRC-72 in highly acid-deficient uranyl nitrate. Measured volumes of resin were agitated vigorously with large excesses of solution for selected times. At the end of the programmed time period, the resin and solution were separated in a few seconds by pouring them onto a fritted glass filter. The resin samples were then dried, weighed, and analyzed for uranium.

The loadings, in percent of 120-min loadings at the same conditions, were as follows:

Temperature, °C	30-35	60-65	60-65
Average U conc., N	0.8	0.95	0.47
Average NO_3^-/U mole ratio	1.6	1.6	1.6
U loading, %, at:			
2 min	--	34	--
5 min	40	50	--
15 min	60	80	80
30 min	80	94	94
60 min	94	97	--
120 min	100	100	100

These results show that loading proceeds at a more rapid pace at the higher temperature, as would be expected. Essentially the same uranium loadings were achieved at uranium concentrations of 0.95 and 0.47 N. This result was surprising since the uranium concentration should be an important variable; however, it is possible that, at these uranium concentrations, two opposing effects are exactly equal in magnitude.

5.5 Resin Drying Results

The resin (Amberlite IRC-72 in these studies) is a porous plastic and an excellent insulator. The controlling requirement for drying this resin is the heat necessary to vaporize the water it contains. If the heat is supplied by a flowing gas, the water is evaporated and the gas is cooled until it becomes saturated with water vapor. With a heated gas, the drying of a fixed bed of resin is not uniform; almost complete drying occurs near the gas inlet before the resin is dry enough to flow freely or fluidize away from the inlet.

Drying of resin for routine product preparation was done in a dryer fabricated using a 9-in.-diam porous stainless steel filter frit. In this device, air heated by steam in a shell-and-tube heat exchanger supplies the heat to evaporate water from the resin. Both the upflow and the downflow of air through the resin bed have been tested. Results show that drying is approximately complete when the temperature near the exit of the resin bed increases to the inlet temperature.

The time required for drying has shown good agreement with heat balances based on the weight of water evaporated. Total periods of 1 to 16 hr were observed, depending on the gas flow rate and the resin volume. The gas flow per liter of uranium-loaded Amberlite IRC-72 would be calculated as follows:

Weight of drained resin:	1130 g
Weight of dried resin:	810 g
Weight of H_2O evaporated:	320 g
Heat to evaporate water at 50°C:	570 cal/g
Heat capacity of air, $\Delta T = 70°C$:	490 cal/g-mole

$$\frac{\text{std liters air}}{\text{liters wet resin}} = \frac{570}{490}\,(320)(22.4) = 8000$$

The experimentally observed values are about 10,000 liters/liter. The difference in the two values appears reasonable since the calculated value did not allow for the heat capacity of the resin, the smaller ΔT as the drying approached completion, or the heat losses between the heat exchanger and dryer.

The largest satisfactory upflow of air for the 8-in.-diam dryer was 240 std liters/min. For higher flow rates, the air came through the bed as large bubbles (i.e., slugging fluidization). These bubbles, which carried resin particles out of the dryer, were probably not in equilibrium with the resin.

Our drying results are given in terms of Loss On Drying (LOD) values, in weight percent, for a small sample exposed at 110°C to conditioned (dehumidified) laboratory air. Our loaded resin batches were initially dried to low LODs (1 to 2 wt % for runs R01-R10, $\leq$ 0.1 wt % for runs R11-R14) because this was considered to be the preferred condition for feed to the carbonization furnaces. Static charge effects complicated the handling of samples dried to 1 to 2% LOD and were very troublesome for those dried to $\leq$ 0.1% LOD. Samples in both glass and plastic sample bottles were examined for static charge effects. The following observations were made:

(1) Batches dried to > 20% LOD were characterized by resin particles sticking together from the effects of moisture.

(2) Batches dried to < 10% LOD showed detectable static charge effects.

(3) Batches dried to 20% < LOD > 10% were completely free-flowing in the sample bottles, displaying no visible static charge effects.

Samples or batches of loaded resin were exposed to varying conditions to determine the LOD values which would result (Table 5). In some of these tests, demineralized water was added to resin of $\leq$ 0.1% LOD. The resin became hot, producing steam when the water first contacted it. This indicates that some of the water has a high heat of reaction; that is, it is chemisorbed on the resin. The LOD values obtained for drained resin and for resin exposed to saturated steam for 10 min do not represent drying to equilibrium; however, the other data in Table 5 are believed to be approximately equilibrium results. It appears that the water present in samples with LODs of greater than 13% is easily removed and probably fills large pores in the resin. For samples with LODs below 13%, however, the water is increasingly difficult to volatilize; this is probably due

Table 5. Drying of uranium-loaded Amberlite IRC-72 resin

(LOD values for samples determined at 110°C in dehumidified air)

Resin feed tested	Test conditions	LOD (wt %)
Resin in demineralized water	Drained on filter at 20°C	26
	Air (rainy weather) at 20°C for 50 to 100 hr	11-13
	Air (dry weather) at 20°C for 50 to 100 hr	9-10
	Conditioned (dehumidified) air at 20°C	6
	Dry (instrument) air at 20°C	3
	Air at ∿ 110°C for 24 to 48 hr	1-2
	Dry (instrument) air at 110 to 120°C	≤ 0.1
	Microwave heating with no air flow	1
Dried resin of ≤ 0.1% LOD	Flowing saturated steam for 10 min	5
	Flowing saturated steam for 45 min	8

to capillary effects initially, while water of hydration (desorption) effects are likely responsible for the last several percent.

The heat to vaporize water can be generated throughout the resin by use of microwave heating. Drying tests were made with up to one-half-liter batches of drained uranyl-loaded Amberlite IRC-72 resin. Most of the water was vaporized within 5 min. As the water content decreased, the rate of heat generation in the resin decreased. As a result, these uranyl-loaded resins did not overheat at long exposure times; and about 1 wt % water was left in the resin. The uniformity of drying in larger batches has not been determined. Other problems associated with drying via microwave heating are the severe limits on materials of construction (no metals) and handling and maintenance difficulties encountered in remote operations.

6. CONCLUSIONS

A step in which nitrate is extracted by a liquid organic amine can be integrated into an attractive flowsheet for preparing resin-based HTGR fissile kernels containing ^{233}U. This step provides acid-deficient uranyl nitrate for an optimum loading of uranium on a carboxylic acid cation-exchange resin. Water is removed as condensate from an evaporator, and the amine nitrate is regenerated to free amine by reaction with $NaOH-Na_2CO_3$ (or NH_4OH) solution to give wastes with low uranium losses.

The nitrate extraction, resin loading, and amine regeneration steps of the integrated flowsheet were demonstrated in 14 runs using components assembled from other developmental studies. All of the resin loading tests were completed as planned; no significant operating difficulties were encountered. Uranium that is extracted or entrained into the organic is easily recovered by a water scrub which is returned to the uranyl nitrate solution tank. The process equipment components also demonstrated critically safe dimensions for the FRPP capacity of 4 kg of ^{233}U per batch.

The process is controlled via in-line pH measurements of inlet and exit solutions. The nitrate extraction is regulated so as to avoid

NO_3^-/U mole ratios below 1.6 and thus prevent any precipitation of UO_3. The loading of resin is completed by maintaining favorable exit solution pH values for at least 1 hr. The dependability of in-line pH instrumentation needs to be demonstrated in a planned engineering-scale resin loading system.

Information was developed on pH values for uranyl nitrate solution vs NO_3^-/U mole ratios, resin loading kinetics, resin drying requirements, and other resin-loading process information. It appears that 10 to 15 wt % water in the dried, uranium-loaded resin may be a preferred value since completely dried resin exhibits static charges which make handling and transfer more difficult. None of the other process information indicates any unexpected requirements or unusual difficulties.

7. APPENDIX: SIZING OF EQUIPMENT FOR RESIN LOADING IN COMMERCIAL HTGR FUEL FABRICATION PLANTS

Commercial fabrication of HTGR fuels will require control of criticality for resin loading using ^{235}U for fresh fuel and ^{233}U for recycle fuel. Other plant requirements will be quite different because the ^{233}U requires remote operation of shielded equipment, while initial and makeup (unirradiated) ^{235}U does not. As a result, commercial refabrication plants will have separate facilities for preparing fresh and recycle fuels and the optimized flowsheets are not likely to be identical.

The reference process for the FRPP is a batch resin-based process designed for a throughput of one 4-kg batch of uranium per day. For this scale of operation, the batch process requires less development, lower equipment and operating costs, and a smaller cell area as compared with continuous operations. The same batch flowsheet using multiple batches per day can efficiently meet commercial ^{233}U recycle plant requirements. The commercial plant for fabrication of fresh fuel with ^{235}U would be larger, and the acceptability of batch processes is less certain. The purpose of these calculations is to estimate the capacities of equipment which is geometrically safe with respect to control of nuclear criticality. All of the procedures under consideration are believed to be adequate for

meeting the chemical flowsheet requirements and to be otherwise technically feasible. Overall comparisons and the development programs required are not discussed here.

7.1 Process Requirements

The resin-based preparation of HTGR fuels is achieved by relatively complete loading of UO_2^{2+} on carboxylic acid cation-exchange resins. Loading of UO_2^{2+} in competition with H^+ is not favorable, and the process conditions must be chosen to maintain low H^+ concentrations during loading of the resin. Acceptable uranium loadings have been possible with three different chemical flowsheets for limiting the H^+ concentrations:

(1) The feeds to the process are hydrogen-form resin and UO_3; the UO_3 dissolves by reacting with the H^+ that is released as the resin loads.[1] A uranyl nitrate solution is the desired medium for transferring the UO_3 to the resin.

(2) The feeds to the process are hydrogen-form resin, uranyl nitrate, and free organic amine; the nitrate is removed by reaction with amine solvent as the UO_2^{2+} is loaded on the resin. The H^+ that is released by the resin reacts with the OH^- that is released by the reaction of amine with nitrate. The amine nitrate is regenerated to free amine in a separate operation.

(3) The uranyl nitrate feed reacts to give UO_2^{2+}-loaded resin and an ammonium nitrate waste solution that is free of uranium. The ammonium feed may consist of an NH_4OH solution or the ammonium form of the resin. The ammonium concentration in the solution must be controlled in order to limit the H^+ concentration without resulting in significant precipitation of uranium.

A commercial fresh-fuel fabrication plant might process 100 kg of fully enriched U (93% ^{235}U) per day. The two resins known to give

acceptable products are Amberlite IRC-72 and Duolite C-464. The resin volumes in solution required per kilogram of uranium are as follows:

Amberlite IRC-72, H^+ or UO_2^{2+} form,	2.75 liters/kg
Amberlite IRC-72, NH_4^+ form,	5.5 liters/kg
Duolite C-464*, H^+ or UO_2^{2+} form,	3.45 liters/kg
Duolite C-464, NH_4^+ form,	5.2 liters/kg

7.2 Capacity of a Continuous (Higgins) Loading Contactor

A 4-in.-ID continuous ion exchange contactor of the Higgins type[8] could be made geometrically safe by careful design of end, feed inlet, and feed exit sections. The capacity would then be determined either by the resin holdup times required for loading to be completed or by the allowable solution flow rates. A 1-in.-ID Higgins column was demonstrated for loading of weak acid resins at rates up to 100 g of uranium per hour.[9]

The capacity limit with respect to solution flows can be estimated as follows:

Allowable superficial solution velocity:	40 cm/min (600 gal/ft^2-hr)[10]
Cross-sectional area:	80 cm^2
Allowable solution flow:	3200 cm^3/min or 4500 liters/day
NO_3^- concentration:	0.6 M
Inlet uranium concentration (NO_3^-/U mole ratio = 1.6):	0.38 M
Exit uranium concentration (NO_3^-/U mole ratio = 2.2):	0.27 M
Uranium loaded on resin:	0.11 mole/liter or 110 kg/day.

This result indicates that a single 4-in.-ID Higgins contactor will allow uranyl nitrate solution flows that are equivalent to loading more than 100 kg of uranium per day.

The capacity limit with respect to the resin holdup time requirements might be estimated as follows:

---

*Trademark of Diamond Shamrock Corp.

Allowable resin length based on 10-m cell height and a U-column configuration:	10 m
Resin cross-sectional area:	80 cm^2
Resin volume:	80 liters
Resin holdup time at high acid deficiency:	2 hr
Total resin holdup time:	4 hr
Resin capacity:	480 liters/day
Uranium capacity based on holdup time for hydrogen or UO_2^{2+}-form resin:	175 kg/day for Amberlite IRC-72; 140 kg/day for Duolite C-464

These calculations indicate that it would be reasonable to use a single 4-in.-ID Higgins contactor for loading 100 kg of ^{235}U per day. The resin holdup times required are probably controlling since higher solution flow rates and concentrations appear to be more practical than large decreases in holdup times. Extrapolation of experimental data for the rates of uranium loading in a 1-in.-ID Higgins column gives 100 kg/day as a practical capacity for a critically safe 4-in.-ID Higgins column.[9]

For flowsheets using ammonium-form resin, the amount of uranium loaded per liter is higher and the resin residence times are more certain to be controlling. However, the practicality of avoiding precipitation of uranium or other problems using ammonium-form resin has not been demonstrated.

7.3 Capacities of Nitrate Extraction Contactors

The reference process for resin-based production of ^{233}U recycle fuel uses the extraction of nitrate by an organic amine to prepare acid-deficient uranyl nitrate. Both the contactor for nitrate extraction and the three contactors for solvent regeneration should be of critically safe geometry to allow operation with ^{235}U or ^{233}U. The settlers, tanks, and other components can be made geometrically safe by including neutron absorbers in baffles or as Raschig ring packing. The chemical equilibria are very favorable so that one theoretical stage is adequate and cocurrent flow is used in all contactors. The contactors are operated

in the organic continuous mode since this type of operation is more favorable than the aqueous continuous mode for phase separation.

The required nitrate removal capacity may be calculated as follows for a 100-kg/day throughput of ^{235}U with a feed composition of 2.5 moles of NO_3^- per mole of UO_2^{2+}:

$$\frac{(100)\ (1000)}{(235)\ (60)\ (24)} = 0.3 \text{ mole of } UO_2^{2+} \text{ per minute}$$

$$(0.3)\ (2.5) = 0.75 \text{ mole of } NO_3^- \text{ per minute}$$

The contactors and settlers used for nitrate extraction in several processes have been 2- or 3-in. ID. For resin loading, operation of the 2-in.-ID spray column was satisfactory for 600 ml/min of 0.27 M amine, or about 0.16 mole/min. In the preparation of ThO_2-UO_3 sol, operation of the 3-in.-ID mixer-settlers was satisfactory for 1.5 kg/hr of ThO_2-UO_3 or 0.4 mole/min of nitrate using 0.75 M amine.[3] When CUSP sol was prepared in the 2-in.-ID spray column, the rate of nitrate extraction using 0.25 M amine was limited to about 0.2 mole/min in order to meet chemical flowsheet requirements.[4] For all of these processes, the extraction rate was limited principally by other components or chemical flowsheet requirements; in each case, there was some evidence of inadequate phase separation.

A nitrate extraction system could easily be designed to be geometrically safe for a ^{235}U throughput of 100 kg/day. The 2- and 3-in.-ID contactors and settlers have shown capacities equivalent to a ^{235}U throughput of 25 kg/day without any sustained effort to optimize the conditions and equipment. The capacities of these contactors could be greatly increased, perhaps to the proposed 100 kg/day, by using higher amine concentrations than 0.25 M plus baffled settlers and phase separators. Contactors with internal diameters of 4 in. and baffled settlers could be specified without further optimization. The capacities for the mixer-settlers used for ThO_2-UO_3 sols could also be scaled up to 100 kg/day for 4-in.-ID units without further optimization.

7.4 Capacities of Batch Loading Contactors

Both the batch size and the number of batches processed per day must be known in order to specify the daily capacity of a batch system. The resin loading contactor must be geometrically safe with respect to criticality. In order to ensure acceptable uniformity throughout the batch, either the resin must be well mixed during loading or all the resin must be loaded approximately to equilibrium with solution of the same composition.

On the average, batch loading contactors remove less uranium per pass than multistage Higgins contactors. The uranyl nitrate solution flow rates are limited for a fluidized bed so as to prevent the resin from streaming with the solution flow. Allowable superficial liquid velocities for fresh hydrogen-form Amberlite IRC-72 resin and 0.6 N NO_3^- are 15 cm/min and 50 cm/min, respectively, after 70% of the uranium loading has been completed. As the allowable flow rate increases, the fraction of uranium removed decreases and the product is approximately constant. For example, the rate of uranium loading per unit of cross-sectional area can be estimated as:

$$(15\ \text{cm/min})(0.14\ \text{mole U/liter})(\text{liter}/1000\ \text{cm}^3) = 2.1 \times 10^{-3}\ \text{mole U min}^{-1}\ \text{cm}^{-2}.$$

$$(50\ \text{cm/min})(0.06\ \text{mole U/liter})(\text{liter}/1000\ \text{cm}^3) = 3 \times 10^{-3}\ \text{mole U min}^{-1}\ \text{cm}^{-2}.$$

The rate of uranium loading corresponding to a ^{235}U throughput of 100 kg/day is 0.3 mole UO_2^{2+}/min (see Sect. 7.3). The batch loading contactors will be loading uranium at a high rate only a fraction of the time. Let us assume that the average rate is one-third of the high rate, based on 2 hr for this high rate period, 2 hr to mix and approach equilibrium, and 2 hr to discharge, charge, and put back on-stream. This indicates a total cross-sectional area of $(0.3)/(0.8 \times 10^{-3})$, or 375 cm^2. If a 5-in.-ID loading contactor with a cross-sectional area of 125 cm^2 were used, for example, attainment of the 100-kg/day capacity would require the operation of three contactors with four batches per contactor (or 12 batches per day). The batch size would be 8.3 kg of uranium. The resin

bed heights would be about 6 ft for Amberlite IRC-72 in the hydrogen form, and 11 ft for either resin in the NH_4^+ form. The combination of assumptions may be somewhat optimistic since the 2-hr period allowed for mixing prior to equilibrium is likely to be inadequate for resin beds of such heights. An annular or slab geometry could allow a larger cross section than a cylinder. Overall, a capacity of 25 kg/day for a one-batch line or four batch lines to give 100 kg/day of ^{235}U would seem practical. Four such loading and drying lines could be supplied by a single nitrate extraction system, as discussed in Sect. 7.3.

8. REFERENCES

1. P. A. Haas, HTGR Fuel Development: Use of UO_3 to Load Cation Exchange Resin for Microsphere Preparation, ORNL-TM-3817 (September 1972).

2. Paul A. Haas, "Loading a Cation Exchange Resin with Uranyl Ions," U.S. Patent 3,800,023 (Mar. 26, 1974).

3. C. C. Haws, B. C. Finney, and W. D. Bond, Engineering-Scale Demonstration of the Sol-Gel Process: Preparation of 100 kg of ThO_2-UO_2 Microspheres at the Rate of 10 kg/Day, ORNL-4544 (May 1971).

4. B. C. Finney and P. A. Haas, Sol-Gel Process--Engineering-Scale Demonstration of the Preparation of High-Density UO_2 Microspheres, ORNL-4802 (November 1972).

5. J. G. Moore, Sol-Gel Process for Preparing ThO_2-UO_3 Sols from Nitrate Solutions by Solvent Extraction with Amines, ORNL-4095 (October 1967).

6. J. H. Shaffer, Oak Ridge National Laboratory, private communication, March 1975.

7. D. J. Crouse and K. B. Brown, Amine Extraction Processes for Uranium Recovery from Sulfate Liquors, ORNL-1959 (November 1955).

8. Robert H. Perry and Cecil H. Chilton (Eds.), Chemical Engineer's Handbook, 5th ed., pp. 19-36 and 19-37, McGraw-Hill, New York, 1973.

9. Chem. Technol. Div. Annu. Progr. Rep. Mar. 31, 1973, ORNL-4883, pp. 48-50.

10. C. W. Hancher, Oak Ridge National Laboratory, private communication, February 1975.

ORNL-TM-4955
UC-77 — Gas-Cooled Reactor Technology

INTERNAL DISTRIBUTION

1. J. L. Anderson
2. S. J. Ball
3. R. L. Beatty
4. A. L. Boch
5. R. A. Bradley
6. J. P. Callahan
7. D. A. Canonico
8. J. F. Carpenter
9. W. L. Carter
10. C. E. Clifford
11. T. E. Cole
12. J. A. Conlin
13. J. H. Coobs
14. D. A. Costanzo
15. F. C. Davis
16. J. P. Drago
17. B. C. Duggins
18. W. P. Eatherly
19. Uri Gat
20. R. W. Glass
21. A. G. Grindell
22. W. S. Groenier
23-32. P. A. Haas
33. W. R. Hamel
34. R. L. Hamner
35. F. E. Harrington
36. C. C. Haws
37. J. W. Hill
38. R. M. Hill, Jr.
39. F. J. Homan
40. J. D. Jenkins
41. D. R. Johnson
42. M. S. Judd
43-44. P. R. Kasten
45. R. K. Kibbe
46. W. J. Lackey
47. K. H. Lin
48. T. B. Lindemer
49. A. L. Lotts
50. R. E. MacPherson
51. A. P. Malinauskas
52. W. R. Martin
53. K. J. Notz
54. L. C. Oakes
55. A. R. Olsen
56. W. H. Pechin
57. R. H. Rainey
58. P. L. Rittenhouse
59. A. D. Ryon
60. J. P. Sanders
61. C. D. Scott
62. Dunlap Scott
63. J. D. Sease
64. J. H. Shaffer
65. R. L. Shepard
66. J. W. Snider
67. R. S. Stone
68. V. J. Tennery
69. M. L. Tobias
70. J. E. Van Cleve
71. V. C. A. Vaughen
72. T. N. Washburn
73. D. C. Watkin
74. G. D. Whitman
75. R. P. Wichner
76. R. G. Wymer
77-78. Central Research Library
79. Document Reference Section
80-89. Laboratory Records
90. Laboratory Records (LRD-RD)
91. ORNL Patent Section

CONSULTANTS AND SUBCONTRACTORS

92. J. C. Frye
93. C. H. Ice
94. J. J. Katz
95. W. K. Davis
96. R. B. Richards

97. Research and Technical Support Division, ERDA, ORO
98. Director, Reactor Division, ERDA, ORO
99-100. Director, Nuclear Fuel Cycle and Production, ERDA, Washington, D. C. 20545
101-243. Given distribution as shown in TID-4500 under Gas-Cooled Reactor Technology category
244-281. U.S./German HTR Research Exchange Agreement (TIC to distribute)