CENTRAL RESEARCH LIBRARY

ORNL-TM-4929

Cy 70

OAK RIDGE NATIONAL LABORATORY LIBRARY
3 4456 0023283 4

Stress Indices for ANSI Standard B16.11 Socket-Welding Fittings

E. C. Rodabaugh
S. E. Moore

OAK RIDGE NATIONAL LABORATORY
CENTRAL RESEARCH LIBRARY
DOCUMENT COLLECTION
LIBRARY LOAN COPY
DO NOT TRANSFER TO ANOTHER PERSON
If you wish someone else to see this document, send in name with document and the library will arrange a loan.
UCN-7969
(3 3-67)

OAK RIDGE NATIONAL LABORATORY
OPERATED BY UNION CARBIDE CORPORATION • FOR THE U.S. ATOMIC ENERGY COMMISSION

Printed in the United States of America. Available from
National Technical Information Service
U.S. Department of Commerce
5285 Port Royal Road, Springfield, Virginia 22161
Price: Printed Copy $5.45; Microfiche $2.25

This report was prepared as an account of work sponsored by the United States Government. Neither the United States nor the Energy Research and Development Administration, nor any of their employees, nor any of their contractors, subcontractors, or their employees, makes any warranty, express or implied, or assumes any legal liability or responsibility for the accuracy, completeness or usefulness of any information, apparatus, product or process disclosed, or represents that its use would not infringe privately owned rights.

ORNL-TM-4929
UC-79, -79h, -79k

Contract No. W-7405-eng-26

Reactor Division

STRESS INDICES FOR ANSI STANDARD B16.11 SOCKET-WELDING FITTINGS

E. C. Rodabaugh
Battelle-Columbus Laboratories

S. E. Moore
Oak Ridge National Laboratory

AUGUST 1975

Subcontract No. 2913

for

OAK RIDGE NATIONAL LABORATORY
Oak Ridge, Tennessee 37830
operated by
UNION CARBIDE CORPORATION
for the
U.S. ENERGY RESEARCH AND DEVELOPMENT ADMINISTRATION

OAK RIDGE NATIONAL LABORATORY LIBRARY
3 4456 0023283 4

CONTENTS

Page

FOREWORD v

ABSTRACT 1

1. INTRODUCTION 1

Purpose and Scope 1

Nomenclature 5

2. ANSI B16.11 STANDARD DIMENSIONAL REQUIREMENTS 7

3. DIMENSIONS OF SOME B16.11 FITTINGS 10

4. PRESSURE-TEMPERATURE RATINGS AND PIPE EQUIVALENCE 21

Standard Pressure Ratings 21

Pipe Equivalence 24

5. STRESS INDICES FOR INTERNAL PRESSURE 26

Primary-Stress B_1 Indices 26

Primary-Plus-Secondary and Peak-Stress Indices 28

6. STRESS INDICES FOR MOMENT LOADINGS 33

Socket-Welding Tees 34

Socket-Welding Elbows 35

Socket-Welding Couplings 36

Summary of Proposed Stress Indices for Moment Loadings 36

Comparison of Design Fatigue Lives for Socket-Welding Fittings and Girth Fillet Welds 38

7. STRESS INDICES FOR THERMAL LOADINGS 47

8. SUMMARY AND RECOMMENDATIONS 50

9. ACKNOWLEDGMENTS 55

10. REFERENCES 56

APPENDIX A. PROPOSED CODE CASE ON STRESS INDICES FOR SOCKET-WELDING FITTINGS 57

APPENDIX B. SURVEY OF FAILURES ASSOCIATED WITH SOCKET AND FILLET WELDS IN NUCLEAR-POWER-PLANT PIPING SYSTEMS 59

FOREWORD

The work reported here was performed at Oak Ridge National Laboratory (ORNL) and at Battelle-Columbus Laboratories under Union Carbide Corporation Nuclear Division subcontract No. 2913, as part of the ORNL Piping Program – Design Criteria for Piping, Pumps, and Valves – under the direction of W. L. Greenstreet, Technical Director, Solid Mechanics Department. The program is funded by the U.S. Energy Research and Development Administration (ERDA) as the government-supported portion of a cooperative effort with industry for the development of design criteria for nuclear-power-plant piping components. This joint effort is coordinated by the Pressure Vessel Research Committee (PVRC) of the Welding Research Council, under the Subcommittee on Piping, Pumps, and Valves. B. C. Wei, ERDA Division of Reactor Research and Development, is the Cognizant Engineer.

Prior reports and open-literature publications under the ORNL piping program are listed below.

1. W. L. Greenstreet, S. E. Moore, and E. C. Rodabaugh, "Investigations of Piping Components, Valves, and Pumps to Provide Information for Code Writing Bodies," ASME Paper 68-WA/PTC-6, American Society of Mechanical Engineers, New York, Dec. 2, 1968.

2. W. L. Greenstreet, S. E. Moore, and R. C. Gwaltney, Progress Report on Studies in Applied Solid Mechanics, ORNL-4576 (August 1970).

3. E. C. Rodabaugh, Phase Report No. 115-1 on Stress Indices for Small Branch Connections with External Loadings, ORNL-TM-3014 (August 1970).

4. E. C. Rodabaugh and A. G. Pickett, Survey Report on Structural Design of Piping Systems and Components, TID-25553 (December 1970).

5. E. C. Rodabaugh, Phase Report No. 115-8, Stresses in Out-of-Round Pipe Due to Internal Pressure, ORNL-TM-3244 (January 1971).

6. S. E. Bolt and W. L. Greenstreet, "Experimental Determination of Plastic Collapse Loads for Pipe Elbows," ASME Paper 71-PVP-37, American Society of Mechanical Engineers, New York, May 1971.

7. G. H. Powell, R. W. Clough, and A. N. Gantayat, "Stress Analysis of B16.9 Tees by the Finite Element Method," ASME Paper 71-PVP-40, American Society of Mechanical Engineers, New York, May 1971.

8. J. K. Hayes and B. Roberts, "Experimental Stress Analysis of 24-Inch Tees," ASME Paper 71-PVP-28, American Society of Mechanical Engineers, New York, May 1971.

9. J. M. Corum et al., "Experimental and Finite Element Stress Analysis of a Thin-Shell Cylinder-to-Cylinder Model," ASME Paper 71-PVP-36, American Society of Mechanical Engineers, New York, May 1971.

10. W. L. Greenstreet, S. E. Moore, and J. P. Callahan, Second Annual Progress Report on Studies in Applied Solid Mechanics (Nuclear Safety), ORNL-4693 (July 1971).

11. J. M. Corum and W. L. Greenstreet, "Experimental Elastic Stress Analysis of Cylinder-to-Cylinder Shell Models and Comparisons with Theoretical Predictions," Paper No. G2/5, First International Conference on Structural Mechanics in Reactor Technology, Berlin, Germany, Sept. 20-24, 1971.

12. R. W. Clough, G. H. Powell, and A. N. Gantayat, "Stress Analysis of B16.9 Tees by the Finite Element Method," Paper No. F4/7, First International Conference on Structural Mechanics in Reactor Technology, Berlin, Germany, Sept. 20-24, 1971.

13. R. L. Johnson, Photoelastic Determination of Stresses in ASA B16.9 Tees, Research Report 71-9E7-PHOTO-R2, Westinghouse Research Laboratory (November 1971).

14. E. C. Rodabaugh and S. E. Moore, Phase Report No. 115-10 on Comparisons of Test Data with Code Methods for Fatigue Evaluations, ORNL-TM-3520 (November 1971).

15. W. G. Dodge and S. E. Moore, Stress Indices and Flexibility Factors for Moment Loadings on Elbows and Curved Pipe, ORNL-TM-3658 (March 1972).

16. J. E. Brock, Elastic Buckling of Heated, Straight-Line Piping Configurations, ORNL-TM-3607 (March 1972).

17. J. M. Corum et al., Theoretical and Experimental Stress Analysis of ORNL Thin-Shell Cylinder-to-Cylinder Model No. 1, ORNL-4553 (October 1972).

18. W. G. Dodge and J. E. Smith, A Diagnostic Procedure for the Evaluation of Strain Data from a Linear Elastic Test, ORNL-TM-3415 (November 1972).

19. W. G. Dodge and S. E. Moore, "Stress Indices and Flexibility Factors for Moment Loadings on Elbows and Curved Pipe," Welding Research Council Bulletin 179, December 1972.

20. W. L. Greenstreet, S. E. Moore, and J. P. Callahan, Third Annual Progress Report on Studies in Applied Solid Mechanics (Nuclear Safety), ORNL-4821 (December 1972).

21. W. G. Dodge and S. E. Moore, ELBØW: A Fortran Program for the Calculation of Stresses, Stress Indices, and Flexibility Factors for Elbows and Curved Pipe, ORNL-TM-4098 (April 1973).

22. W. G. Dodge, Secondary Stress Indices for Integral Structural Attachments to Straight Pipe, ORNL-TM-3476 (June 1973). Also in Welding Research Council Bulletin 198, September 1974.

23. E. C. Rodabaugh, W. G. Dodge, and S. E. Moore, Stress Indices at Lug Supports on Piping Systems, ORNL-TM-4211 (May 1974). Also in Welding Research Council Bulletin 198, September 1974.

24. W. L. Greenstreet, S. E. Moore, and J. P. Callahan, Fourth Annual Progress Report on Studies in Applied Solid Mechanics (Pressure Vessels and Piping System Components), ORNL-4925 (July 1974).

25. R. C. Gwaltney, CURT-II – A Computer Program for Analyzing Curved Tubes or Elbows and Attached Pipes with Symmetric and Unsymmetric Loadings, ORNL-TM-4646 (October 1974).

26. E. C. Rodabaugh and S. E. Moore, Stress Indices and Flexibility Factors for Concentric Reducers, ORNL-TM-3795 (February 1975).

27. R. C. Gwaltney, S. E. Bolt, and J. W. Bryson, Theoretical and Experimental Stress Analysis of ORNL Thin-Shell Cylinder-to-Cylinder Model 4, ORNL-5019 (June 1975).

28. R. C. Gwaltney, J. M. Corum, S. E. Bolt, and J. W. Bryson, Theoretical and Experimental Stress Analyses of ORNL Thin-Shell Cylinder-to-Cylinder Model 3, ORNL-5020 (June 1975).

STRESS INDICES FOR ANSI STANDARD B16.11 SOCKET-WELDING FITTINGS

E. C. Rodabaugh S. E. Moore

ABSTRACT

Stress indices for ANSI standard B16.11 socket-welding tees, 45° elbows, 90° elbows, and couplings are developed for intended use with the Class-1 piping system design rules of Section III – Division 1 of the ASME Boiler and Pressure Vessel Code. Indices are given for the evaluation of appropriate primary stresses, primary-plus-secondary stresses, and peak stresses due to internal pressure, bending-moment loads, and thermal gradients between the fitting and the attached pipe. The proposed indices are based on the dimensional and pressure-burst requirements of the B16.11 standard, the apparent shapes of B16.11 fittings as indicated from a random sampling taken off-the-shelf, the standard pressure-temperature ratings of the fittings, and on current stress indices now in the Code for similar butt-welding fittings. Specific recommendations are made for issuing the new stress indices in a Code case.

Key words: stress indices, stress analysis, straight pipe, elbows, socket-welding fittings, socket-welded joints, tees, couplings, fillet welds, piping code, ASME BPVC Section III, ANSI-B16.11, nuclear piping, pressure-vessel code, ORNL piping program.

1. INTRODUCTION

Purpose and Scope

Both socket-welding and threaded fittings are permitted for use in Class-1 nuclear piping systems by Section III, Division 1 of the ASME Boiler and Pressure Vessel Code,[1] provided they are manufactured in accordance with the ANSI standard B16.11, "Forged Steel Fittings, Socket-Welding and Threaded."[2,3] Specifically, paragraph NB-3649* of the Code accepts

*In this report, reference to articles, subarticles, paragraphs, tables, or figures from Section III, Division 1 of the ASME Boiler and Pressure Vessel Code are identified by number (e.g., NB-xxxx), as appropriate. Hereafter Section III, Division 1 will be referred to simply as "the Code."

piping products manufactured in accordance with a set of standards given in Table NB-3691-1 as suitable for use* provided the design adequacy of the product is based on one of three possible methods, one of which is "... an ANSI B16.9 type burst test." The B16.11 standard includes a suitable pressure-bursting requirement. Specific acceptance for socket-welding branch connections is also given in NB-3643.2 and for elbows in NB-3642.2. Other B16.11 fittings, such as couplings and crosses, are acceptable under the general provisions of paragraph NB-3649.

Certain restrictions, however, on the use of socket-welding and threaded fittings are imposed in other paragraphs of the Code. Subparagraph NB-3661.2, under the general heading "NB-3660 Design of Welds," limits the use of socket-welded piping joints to nominal pipe sizes of 2 in. and smaller and imposes fabrication requirements on the welds joining the fitting to the pipe.** Threaded joints, on the other hand, are not limited in size, but according to subparagraph NB-3671.3, threaded joints in which the threads provide the only seal are not permitted. If a seal weld is used, the stress analysis of the joint must include a determination of the stresses in the weld resulting from the relative deflections of the mated parts. Implementing this requirement is sufficiently difficult to almost eliminate the use of threaded fittings in Class-1 piping systems, especially if a socket-welding or a butt-welding fitting could be used instead.

For Class-1 piping systems, the Code requires that a stress analysis be prepared in sufficient detail to show that the stress limits and design criteria of the Code are satisfied (NB-3625), and a set of design rules and formulas are provided in NB-3640 and NB-3650 to implement this requirement. Stress indices for many commonly used components are provided in Table NB-3683.2-1 for use with the design formulas, Eqs. (9) through (14)

---

*The 1966 edition (ref. 2) of ANSI B16.11 listed in Table NB-3691.1 is out of date with the 1973 edition (ref. 3) of the Standard. The present report, however, is based primarily on the 1966 edition, since it is the official Code reference. Where important differences exist, they are pointed out in the text, and one of the recommendations given in the last section is to update Table NB-3691.1 to include ANSI B16.11-1973.

**The present wording of NB-3661.2(b) is not quite accurate. Suggested changes to the Code to remedy this are included in the "Summary and Recommendations" section of this report.

of subparagraphs NB-3652 and NB-3653. These equations are reproduced in Table 1 for convenient reference.* The stress indices are identified by the characters B, C, and K for the three categories of Code-allowable stresses: primary, primary-plus-secondary, and peak stresses, respectively. Loadings are identified by subscripts: 1 for pressure, 2 for bending and torsional moments, and 3 for thermal gradients.

To the extent that stress indices are provided, the prescribed analysis method is a relatively simple way to check a piping design for compliance with Code requirements. At present, stress indices are given for the fillet weld between a socket-welding fitting and straight pipe but are not given for the body of the fitting itself. The objective of this report is to provide stress indices for the more commonly used socket-welding fittings. Fittings covered include nonreducing 2 in. and smaller nominal-size B16.11 socket-welding tees, 45° elbows, 90° elbows, and couplings. Threaded fittings and socket-welding crosses and half-couplings are not covered.

Previous reports documenting the development of stress indices for specific piping products** have drawn heavily on the published literature for relevant experimental and analytical data and have used existing analytical methods to conduct parameter studies. For socket-welding fittings, information of this type apparently has not been published, although we did obtain a small amount of unpublished ANSI B16.9-type burst-test data from one of the manufacturers,[4] as well as one indication of a possible cyclic-pressure fatigue failure from field failure reports.

Since neither experimental nor analytical data were available, the stress indices presented in this report are based on engineering judgment and combinations of the following factors: the dimensional and burst-pressure requirements of the ANSI B16.11 standard; the standard pressure-temperature ratings of the fittings; their apparent shapes, as indicated from a small random sampling of off-the-shelf fittings; and analogies with similar butt-welding fittings.

---

*Table 1 is presented with appropriate definitions given in the nomenclature, but without the accompanying footnotes, qualifications, or cross references given in the Code.

**A listing of previously published reports is given in the Foreword.

Table 1. Equations[a] for the simplified design-analysis procedures of the Code

Design stress formulas	Code equation No.
$B_1 \frac{PD_o}{2t} + B_2 \frac{D_o}{2I} \bar{M}_i \le 1.5S_m$	(9)
$S_n = C_1 \frac{P_oD_o}{2t} + C_2 \frac{D_o}{2I} M_i + \frac{1}{2(1-\nu)} E\alpha\lvert\Delta T_1\rvert + C_3E_{ab}\lvert\alpha_aT_a - \alpha_bT_b\rvert \le 3S_m$	(10)
$S_p = K_1C_1 \frac{P_oD_o}{2t} + K_2C_2 \frac{D_o}{2I} M_i + \frac{1}{2(1-\nu)} K_3E\alpha\lvert\Delta T_1\rvert + K_3C_3E_{ab}\lvert\alpha_aT_a - \alpha_bT_b\rvert + \frac{1}{1-\nu} E\alpha\lvert\Delta T_2\rvert$	(11)
$S_e = C_2 \frac{D_o}{2I} M_i^* \le 3S_m$	(12)
$C_1 \frac{P_oD_o}{2t} + C_2 \frac{D_o\bar{M}_i}{2I} + C_3'E_{ab}\lvert\alpha_aT_a - \alpha_bT_b\rvert \le 3S_m$	(13)
$S_{alt} = \frac{K_e}{2} S_p$,	(14)

where

$K_e = 1 \quad (S_n \le 3S_m)$,

$K_e = 1 + \frac{(1-n)}{n(m-1)}\left(\frac{S_n}{3S_m} - 1\right) \quad (3S_m < S_n < 3mS_m)$,

$K_e = 1/n \quad (S_n \ge 3mS_m)$,

and m and n are material parameters given in NB-3228.3(b).

[a]Abstracted from paragraph NB-3650 of the Code; see "Nomenclature" and the Code for symbol definitions.

The permissible shapes and dimensions of the fittings were determined by analyzing the requirements of the B16.11 standard and by examining a small random sampling of fittings purchased for this purpose. This information is presented in Chaps. 2 and 3, respectively. Next, the pressure-temperature ratings given in the standard were compared with Code-allowable pressures for corresponding sizes of straight pipe, calculated according to the rules of NB-3640. Using this information, a reference or "equivalent" pipe size was defined for each class of B16.11 fitting for use in the Code analysis procedures. This information is presented in Chap. 4. Recommended stress indices for pressure, moment, and thermal loadings are presented in Chaps. 5, 6, and 7, respectively, based on the information in the previous chapters and on stress indices now in the Code for similar butt-welding piping components.

The proposed stress indices for socket-welding fittings and corresponding indices for the fillet welds between the fitting and the pipe are summarized in Chap. 9 for comparison. Chapter 9 also includes specific recommendations for revising the Code. We believe that the proposed stress indices are conservative. However, because of the lack of more-definitive information, it is recommended that the new indices be first introduced as a Code Case rather than as a Code revision, especially since Code Cases are permissive rather than mandatory. The proposed Code Case is given in Appendix A. Appendix B lists the results of a search of the Nuclear Safety Information Center files at Oak Ridge for relevant failure information in nuclear-power-plant piping systems.

Definitions of symbols and nomenclature are given in the next section.

Nomenclature

The symbols used in this report and their meanings are as follows:

Stress Indices

B_1 = primary-stress index for pressure loading

C_1 = primary-plus-secondary-stress index for pressure loading

K_1 = peak-stress index for pressure loading

The above set of symbols with subscript 2 refer to moment loading and with subscript 3 to thermal-gradient loading. The symbol C_3' stands for the stress index for the membrane stress due to thermal loading. Stress indices with the additional subscripts b and r (e.g., B_{2b}, B_{2r}) refer to loadings on the branch and run, respectively, for branch connections and tees.

a = additional wall thickness in Eqs. (1), (2), and (3) of NB-3641.1 to provide for corrosion, etc.

C = ANSI standard B16.11 socket-wall thickness

D = run-bore diameter of a B16.11 fitting

D_i = nominal inside diameter of pipe

D_o = nominal outside diameter of pipe

E = modulus of elasticity

E_{ab} = average modulus of elasticity for two sides (a and b) at a gross discontinuity

G = body wall thickness of a B16.11 component

I = moment of inertia

K_e = fatigue-evaluation factor defined by the Code in paragraph NB-3653.6

M_i = range of moment-loading vector due to thermal expansion, anchor movements from any cause, earthquake, and other mechanical loads

$\overline{M}_i$ = moment-loading vector due to loads caused by weight, inertial earthquake effects (amplitude), and other sustained mechanical loads

M_i^* = range of moment-loading vector due to thermal expansion and thermally induced anchor movements

P_u = computed bursting pressure

P_o = pressure range

P_r = rated pressure of fitting at 100°F

r = mean radius of pipe cross section

R = bend radius for butt-welding elbow

S = Code-allowable maximum normal stress for Class-2 and Class-3 pipe (function of material and temperature)

S_u = specified minimum tensile strength of pipe material

S_a = stress-intensity amplitude

S_m = Code design stress intensity (function of material and temperature) for Class-1 pipe

S_n = primary-plus-secondary-stress-intensity range

S_p = peak-stress-intensity range

t = nominal pipe-wall thickness

t_m = minimum pipe-wall thickness (0.875 times nominal)

$Z = (\pi/32)(D_o^4 - D_i^4)/D_o$ = section modulus of pipe

α_a, α_b = coefficients of thermal expansion for the two sides of a gross geometric discontinuity

ΔT_1 = range of linear portion of through-the-wall temperature gradient

ΔT_2 = range of nonlinear portion of through-the-wall temperature gradient

ν = Poisson ratio (assumed to be 0.3 in this report)

2. ANSI B16.11 STANDARD DIMENSIONAL REQUIREMENTS

Table 2, abstracted from ANSI B16.11-1966, gives the specified dimensions for 2-in. (nominal size) and smaller socket-welding fittings. In this edition of the standard[2] there are two classes of fittings, designated as 3000-lb and 6000-lb. The 1973 edition[3] gives a third class, designated as 9000-lb, for several nominal sizes. The 3000-lb class is intended for use with pipe up to sched-80* wall thickness, and the 6000-lb class for use with pipe up to sched-160 wall thickness. The 9000-lb class corresponds with double extra strong (XXS) pipe. It might be noted that the values specified in Table 2 for the minimum body wall thickness G for the 3000-lb and 6000-lb classes are the same as the nominal wall thicknesses of sched-80 and sched-160 pipe, respectively, given in the ANSI B36.10 standard.[5] These data are given in Table 3 along with other useful dimensional information from ref. 6.

Values given in Table 2 for the minimum socket wall thickness C are generally 1.09 times G.** The socket wall thickness is important because it determines the maximum size of the fillet weld joining the fitting to the pipe. The Code requires the minimum leg dimension of the fillet weld to be 1.09 times the nominal thickness of the pipe but not less than 1/8

---

*In this report the abbreviation sched is used to indicate the wall thickness or schedule number of standard sized pipe.

**The ratio C/G is 1.09 ± 0.005 for all sizes and both pressure classes except for the 1/8-in. 3000-lb class. For this case, C = 0.125 in., and C/G = 1.316.

Table 2. Specified dimensions[a] of B16.11 socket-welding fittings 2 in. and smaller (all values in inches)

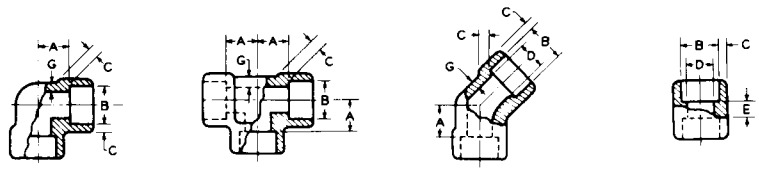

Nominal pipe size	Socket bore diameter[b] (B)	Depth of socket (min)	Wall-thickness minimum				Bore diameter of fitting[b] (D)	
			3000-lb		6000-lb			
			Socket (C)	Body (G)	Socket (C)	Body (G)	3000-lb	6000-lb
1/8	0.420 0.430	3/8	0.125	0.095	0.135	0.124	0.254 0.284	0.141 0.171
1/4	0.555 0.565	3/8	0.130	0.119	0.158	0.145	0.349 0.379	0.235 0.265
3/8	0.690 0.700	3/8	0.138	0.126	0.172	0.158	0.478 0.508	0.344 0.374
1/2	0.855 0.865	3/8	0.161	0.147	0.204	0.188	0.607 0.637	0.451 0.481
3/4	1.065 1.075	1/2	0.168	0.154	0.238	0.219	0.809 0.839	0.599 0.629
1	1.330 1.340	1/2	0.196	0.179	0.273	0.250	1.034 1.064	0.800 0.830
1 1/4	1.675 1.685	1/2	0.208	0.191	0.273	0.250	1.365 1.395	1.145 1.175
1 1/2	1.915 1.925	1/2	0.218	0.200	0.307	0.281	1.595 1.625	1.323 1.353
2	2.406 2.416	5/8	0.238	0.218	0.374	0.344	2.052 2.082	1.674 1.704

[a]Dimensional information given here is taken from ANSI B16.11-1966 (ref. 2). Slightly different values for the bore diameter (D) are given in ANSI B16.11-1973 (ref. 3).

[b]Upper and lower values for each size are the respective minimum and maximum values.

Table 3. Nominal dimensions[a] and design properties[b] of standard-size pipe, 2 in. and smaller

Nominal pipe size (in.)	Outside diameter (D_o)	Schedule or wall designation	Wall thickness[c] (t) (in.)	Mean radius-to-thickness ratio (r/t)	Section modulus (Z)
1/8	0.405	40	0.068	2.478	0.0052
		80	0.095	1.632	0.0060
		160	0.124	1.133	0.0064
		XXS	0.190	0.566	0.0065
1/4	0.540	40	0.088	2.568	0.0123
		80	0.119	1.769	0.0140
		160	0.145	1.362	0.0147
		XXS	0.238	0.634	0.0155
3/8	0.675	40	0.091	3.209	0.0216
		80	0.126	2.179	0.0255
		160	0.158	1.636	0.0278
		XXS	0.252	0.839	0.0301
1/2	0.840	40	0.109	3.353	0.0407
		80	0.147	2.357	0.0478
		160	0.187	1.746	0.0527
		XXS	0.294	0.929	0.0577
3/4	1.050	40	0.113	4.146	0.0706
		80	0.154	2.909	0.0853
		160	0.218	1.908	0.1004
		XXS	0.308	1.205	0.1104
1	1.315	40	0.133	4.444	0.1329
		80	0.179	3.173	0.1606
		160	0.250	2.130	0.1903
		XXS	0.358	1.337	0.2137
1 1/4	1.660	40	0.140	5.429	0.2346
		80	0.191	3.846	0.2914
		160	0.250	2.820	0.3421
		XXS	0.382	1.673	0.4111
1 1/2	1.900	40	0.145	6.052	0.326
		80	0.200	4.250	0.412
		160	0.281	2.881	0.508
		XXS	0.400	1.875	0.598
2	2.375	40	0.154	7.211	0.561
		80	0.218	4.947	0.731
		160	0.343	2.962	0.979
		XXS	0.436	2.224	1.104

[a]Nominal dimensions from ANSI standard B36.10–1970, Wrought Steel and Wrought-Iron Pipe, Amer. Soc. Mech. Engr., New York, 1970.

[b]Design properties from Piping Engineering, Tube Turns, Louisville, KY, 1969.

[c]Since ANSI B16.10 does not include sched 160 or double extra strong thickness for pipe sizes 1/8, 1/4, and 3/8 in., the values cited here were taken from ANSI B16.11–1973.

in. (NB-4427). For other applications the Code requires the minimum leg dimension of fillet welds to be 1.4 times the nominal pipe thickness.

In order to visualize the relative dimensions of socket-welding fittings and the attached pipe, cross-sectional drawings of B16.11 elbows and tees are shown in Figs. 1 through 8. In these drawings the wall thicknesses are equal to the specified minimums, whereas the diameters are either nominal or average dimensions. The exterior-surface intersections are shown with sharp corners inasmuch as the B16.11 standard doesn't specifically require fillets or corners with given radii.

The interior contours of the tees shown in Figs. 1, 2, 5, and 6 were drawn on the assumption that the bore diameters are both constant and equal to D from Table 2, and intersect at the transverse plane of the run axis. The interior contours of the 90° elbows, shown in Figs. 3, 4, 7, and 8, were drawn on the assumption that both bore diameters are equal to D from the ends of the fittings to the intersection of the axes and that the interior contour at the transition was finished using a spherical cutter of the same diameter. It was also assumed that the outside contour in this region is a quarter-section of a sphere with a diameter equal to the inside diameter plus twice the wall thickness (D + 2G).

Examination of a few fittings, purchased off-the-shelf at random, indicates that the representations shown in Figs. 1 through 8 are reasonably accurate, except that the exterior surface intersections do have transition radii, even though such radii are not required by the B16.11 standard.

3. DIMENSIONS OF SOME B16.11 FITTINGS

For general design purposes it is necessary to assume that fittings purchased to a standard specification, such as ANSI B16.11, will have the most adverse set of dimensions permitted by the specification. Nevertheless, it is of interest to examine a few fittings purchased as meeting the standard for unusual features or for dimensional characteristics not covered by the standard. For this purpose a number of fittings were purchased from local jobbers' stocks, with an attempt to include fittings from various manufacturers.

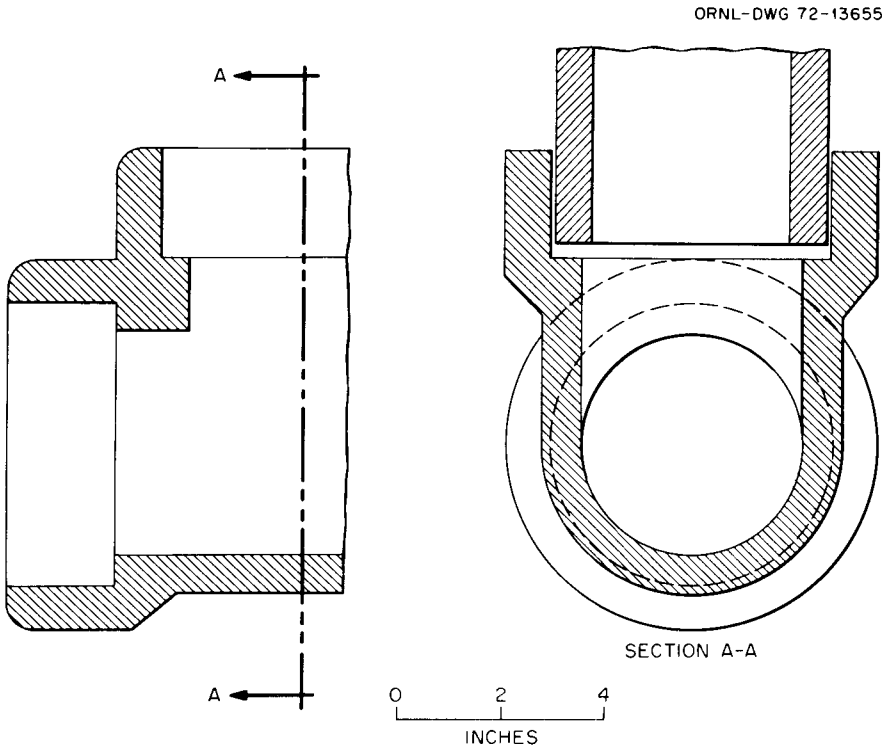

Fig. 1. ANSI B16.11 tee, 1-in., 3000-lb-class, sched-80 pipe.

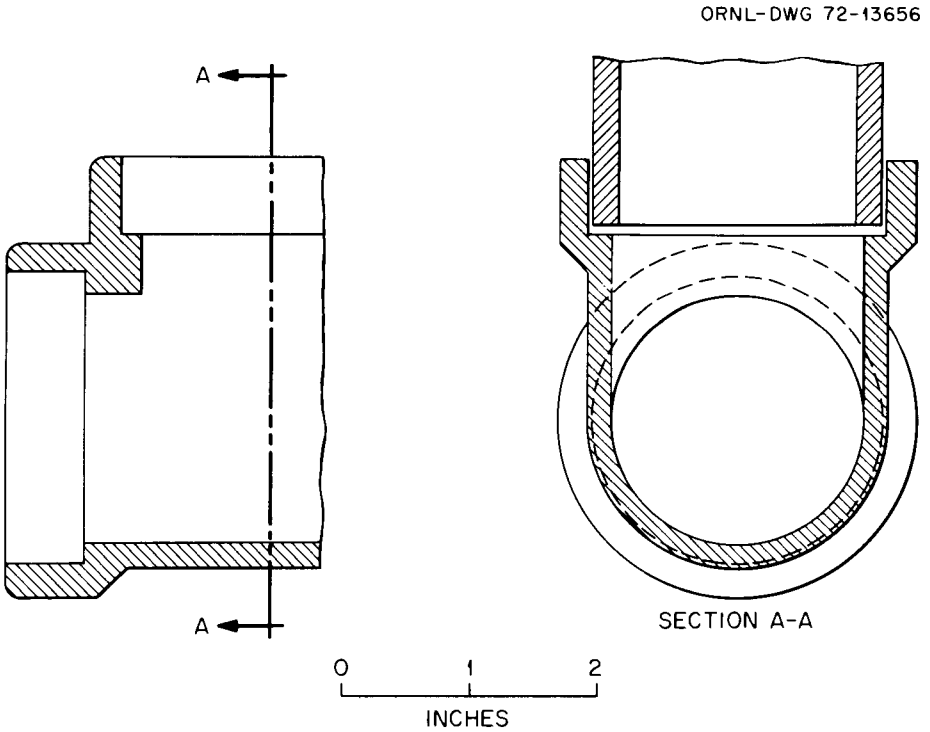

Fig. 2. ANSI B16.11 tee, 2-in., 3000-lb-class, sched-80 pipe.

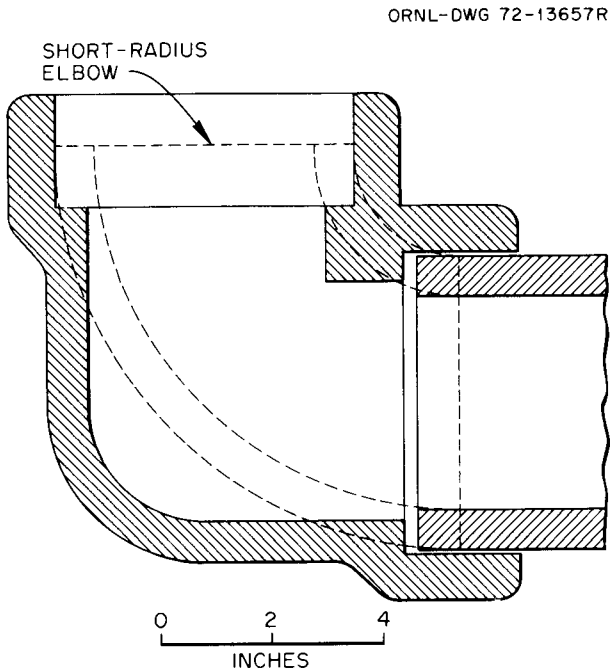

Fig. 3. ANSI B16.11 90° elbow, 1-in., 3000-lb-class, sched-80 pipe.

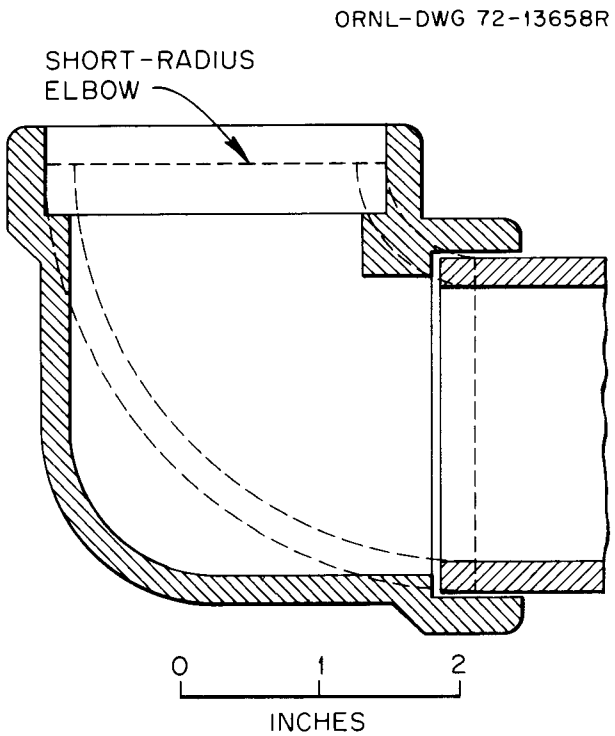

Fig. 4. ANSI B16.11 90° elbow, 2-in., 3000-lb-class, sched-80 pipe.

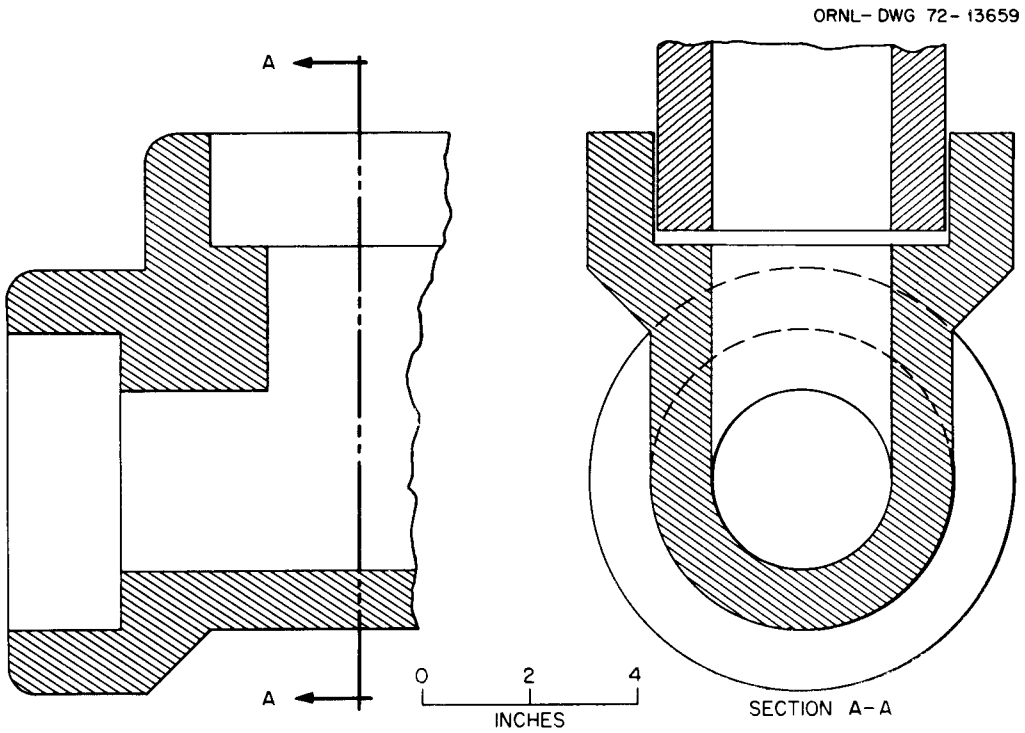

Fig. 5. ANSI B16.11 tee, 1-in., 6000-lb-class, sched-160 pipe.

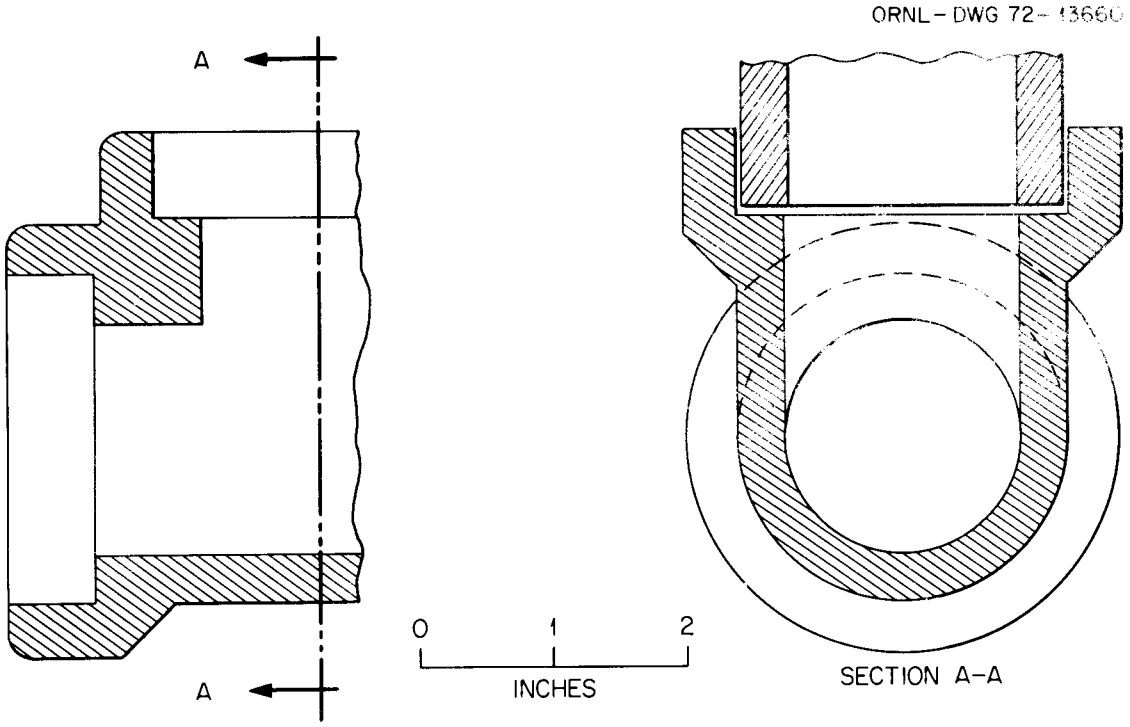

Fig. 6. ANSI B16.11 tee, 2-in., 6000-lb-class, sched-160 pipe.

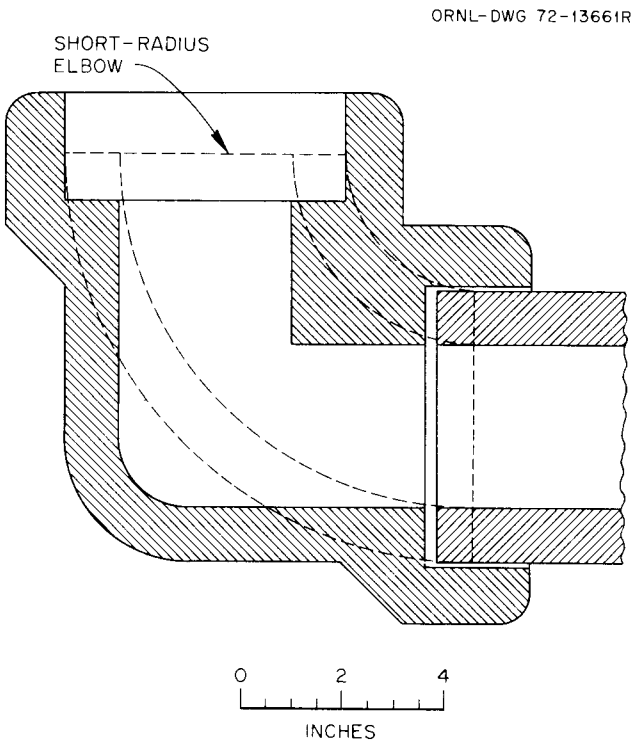

Fig. 7. ANSI B16.11 90° elbow, 1-in., 6000-lb-class, sched-160 pipe.

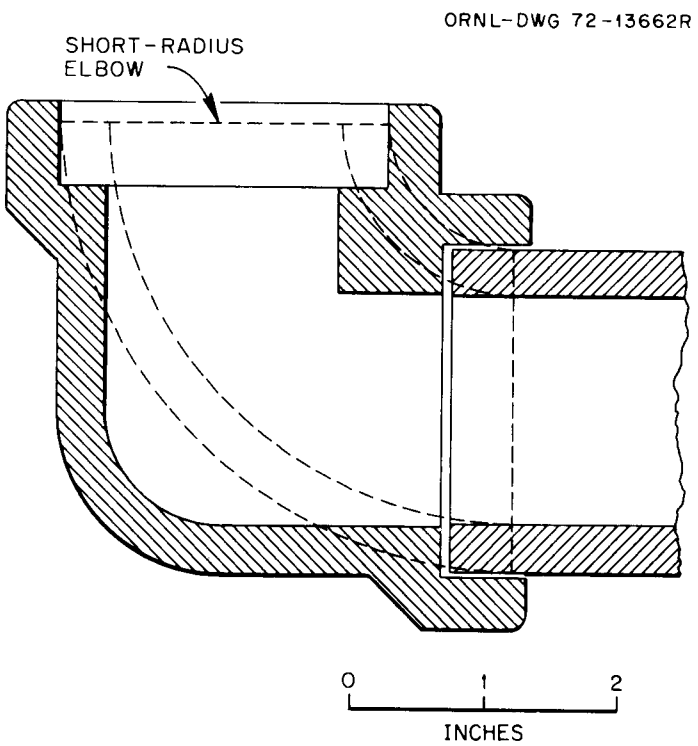

Fig. 8. ANSI B16.11 90° elbow, 2-in., 6000-lb-class, sched-160 pipe.

A few of the fittings were selected for detailed dimensional checks, and the results are given in Table 4. These data indicate that the minimum body-wall thickness typically exceeds G, the specified minimum, by a significant amount. On the other hand, for some of the fittings the socket-wall thickness (also called the socket-face width) barely met the specified minimum C. For one 2-in., 3000-lb-class, 90° elbow (not included in Table 4) the minimum width of the socket face was 0.2 in., whereas the specified minimum is 0.238 in. As noted earlier, this dimension is significant in that it controls the size of the fillet weld used to attach the fitting to the pipe.

Photographs of representative socket-welding tees and elbows are shown in Figs. 9 through 13. As can easily be seen, the exterior surfaces of all these fittings have generously rounded rather than sharp corners. In this respect they are different from the drawings shown earlier. One valid reason for this difference is that all the fittings shown here were formed by forging. In this process the surfaces essentially must have smooth transitions, and unless the exterior surfaces are machined to their final dimensions, one would expect smooth rather than sharp corner transitions. Furthermore, fabrication of the fittings by forming is in accordance with the ANSI B16.11 standard which requires that the material must conform to the ASTM standard A-182 (ref. 7) for alloy and stainless-steel products and to ASTM A-105 (ref. 8) for carbon-steel products. Both these standards require that: "... the material ... shall be brought as nearly as practicable to the finished shape and size by hot working and shall be so processed as to cause metal-flow during the hot-working operation in the direction most favorable for resisting the stresses encountered in service." In order to assure that the user of the stress indices given herein does not inadvertently overlook this requirement and use the indices for a fitting that has been machined from plate or bar stock, it is recommended that the stress indices be specifically limited to fittings in which the exterior contours are forged to shape.

Table 4. Measured dimensions of some randomly selected B16.11 fittings and comparisons with specified minimum dimensions

Type	Nominal size (in.)	Rating (lb)	Material[a]	Manufacturer	Socket-wall thickness			Body-wall thickness		
					Specified minimum[b]	Measured		Specified minimum[c]	Measured	
						Minimum	Maximum		Minimum	Maximum
90° elbow	2	3000	CS	A	0.238	0.248	0.300	0.218	0.330	0.385
90° elbow	2	6000	SS	A	0.374	0.411	0.462	0.344	0.635	0.690
45° elbow	2	3000	CS	B	0.238	0.240	0.303	0.218	0.360	0.435
45° elbow	2	3000	CS	C	0.238	0.280	0.322	0.218	0.285	0.330
Straight tee	1	3000	SS	A	0.196	0.207	0.264	0.179	0.283	0.325
Straight tee	1	6000	CS	C	0.273	0.392	0.422	0.250	0.535	0.560
Straight tee	2	3000	SS	A	0.238	0.266	0.294	0.218	0.340	0.370
Straight tee	2	3000	CS	A	0.238	0.254	0.287	0.218	0.320	0.350
Straight tee	2	3000	CS	D	0.238	0.279	0.320	0.218	0.290	0.330
Straight tee	2	3000	CS	B	0.238	0.249	0.286	0.218	0.295	0.340
Straight tee	2	6000	CS	C	0.374	0.434	0.479	0.344	0.596	0.624
Straight tee	2	6000	SS	A	0.374	0.435	0.460	0.344	0.655	0.675
Straight tee	2	6000	SS	A	0.374	0.426	0.455	0.344	0.620	0.640

[a]CS = carbon steel; SS = austenitic stainless steel.

[b]Dimension C in B16.11.

[c]Dimension G in B16.11.

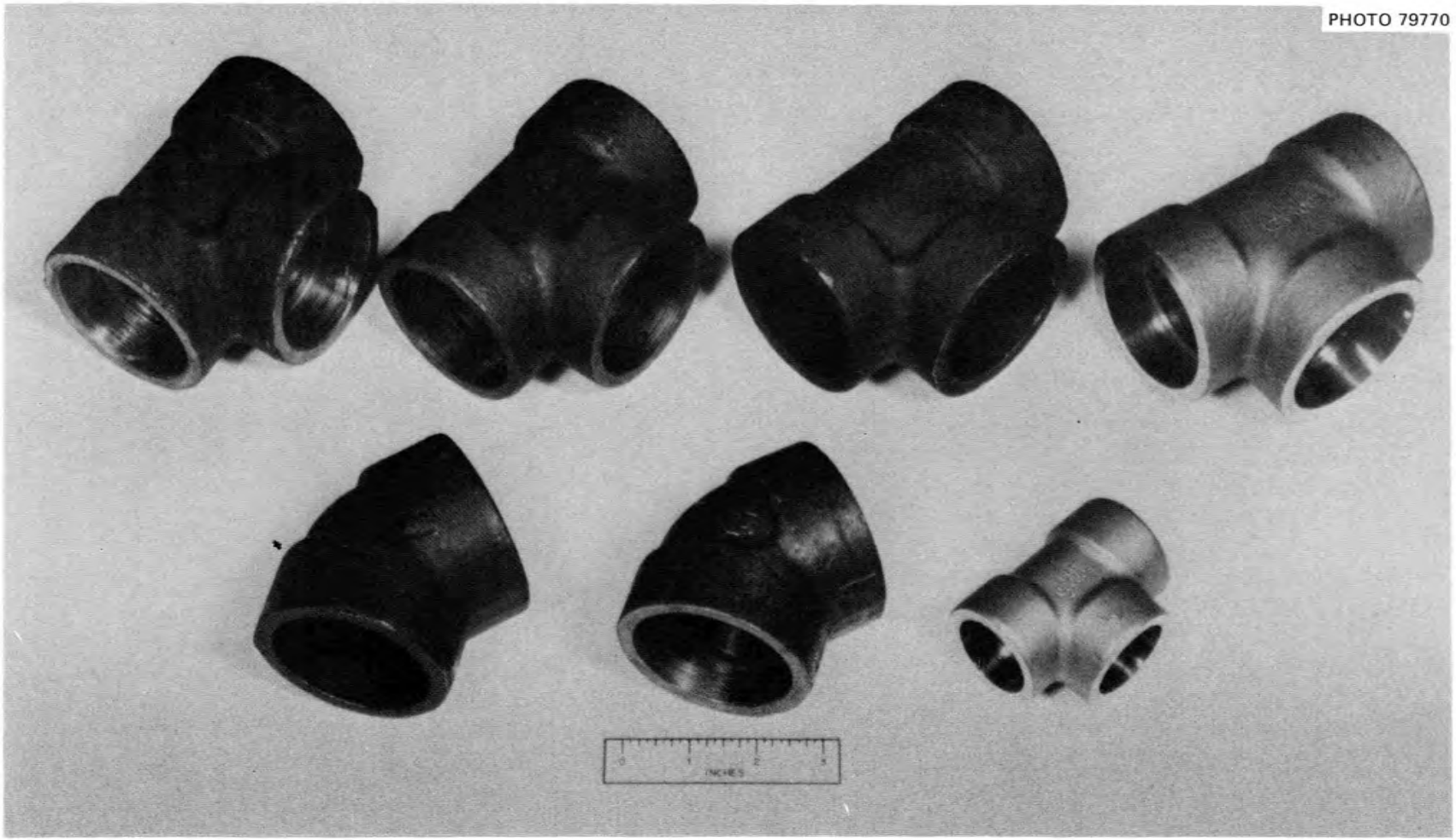

Fig. 9. Typical ANSI B16.11 fittings. Top row: 2-in., 3000-lb-class tees; bottom row: 2-in., 3000-lb-class 45° elbows and a 1-in., 3000-lb-class tee.

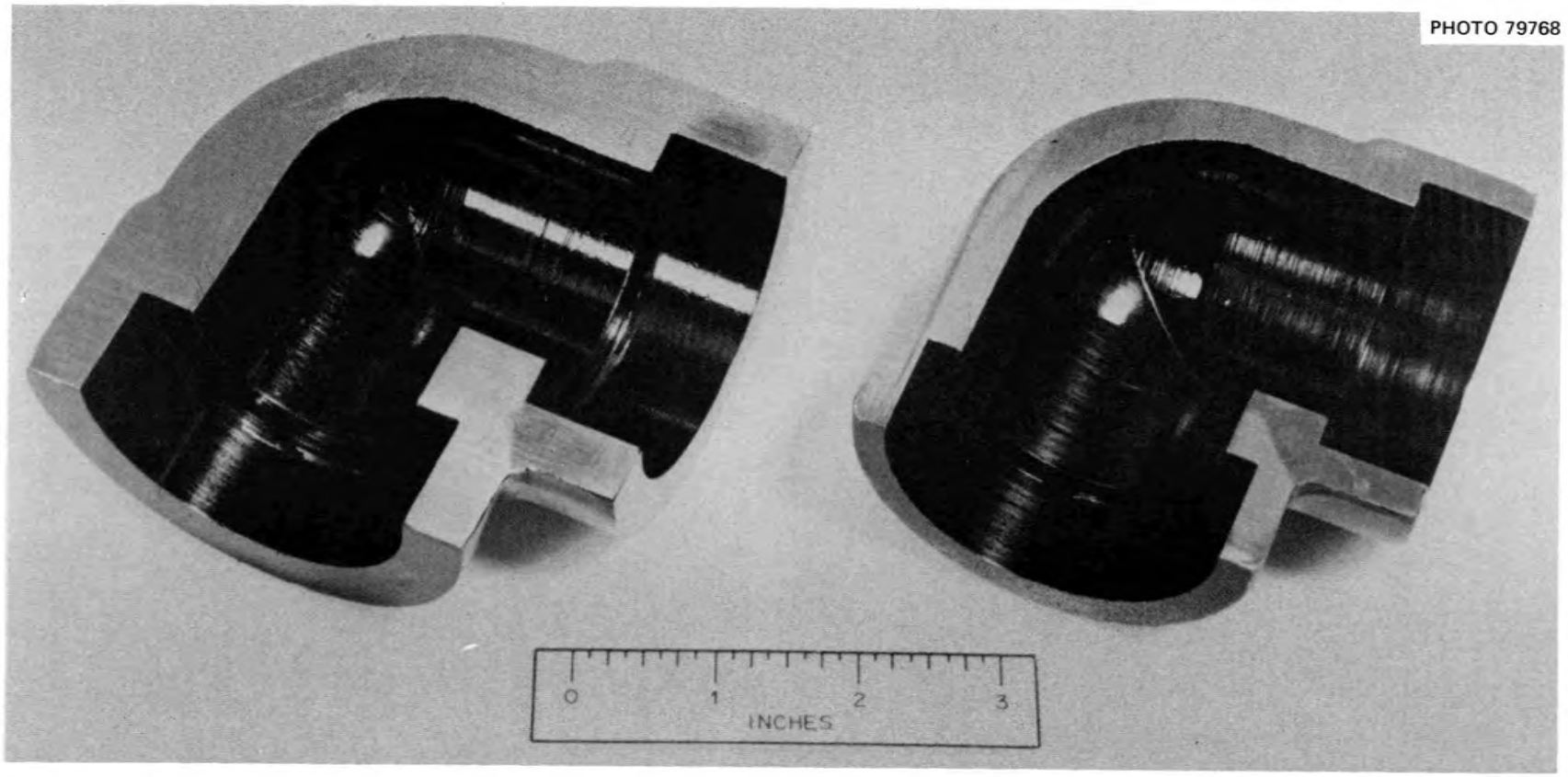

Fig. 10. Cross sections of a 2-in., 6000-lb-class 90° elbow and a 2-in., 3000-lb-class 90° elbow.

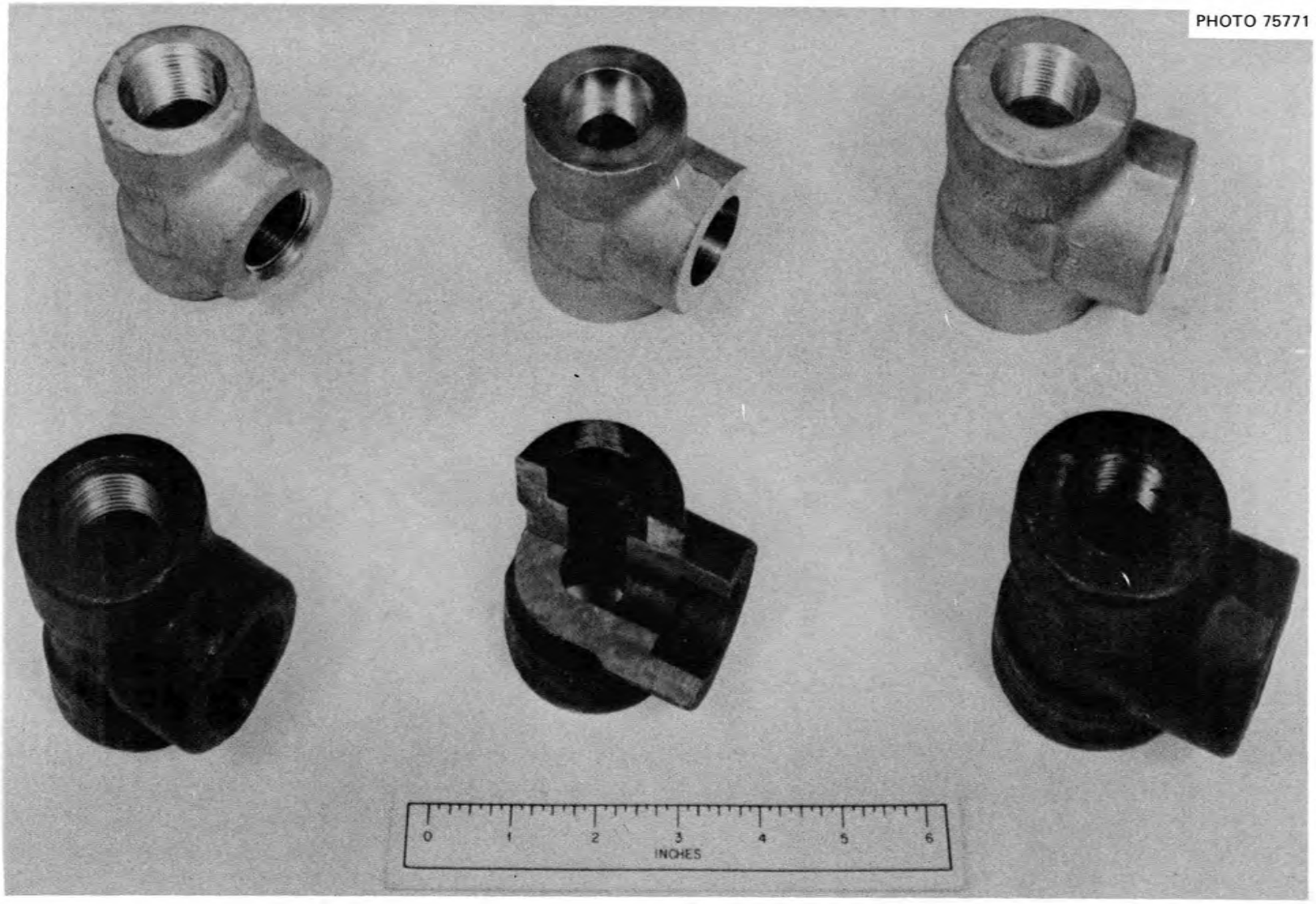

Fig. 11. One-inch ANSI B16.11 6000-lb-class tees.

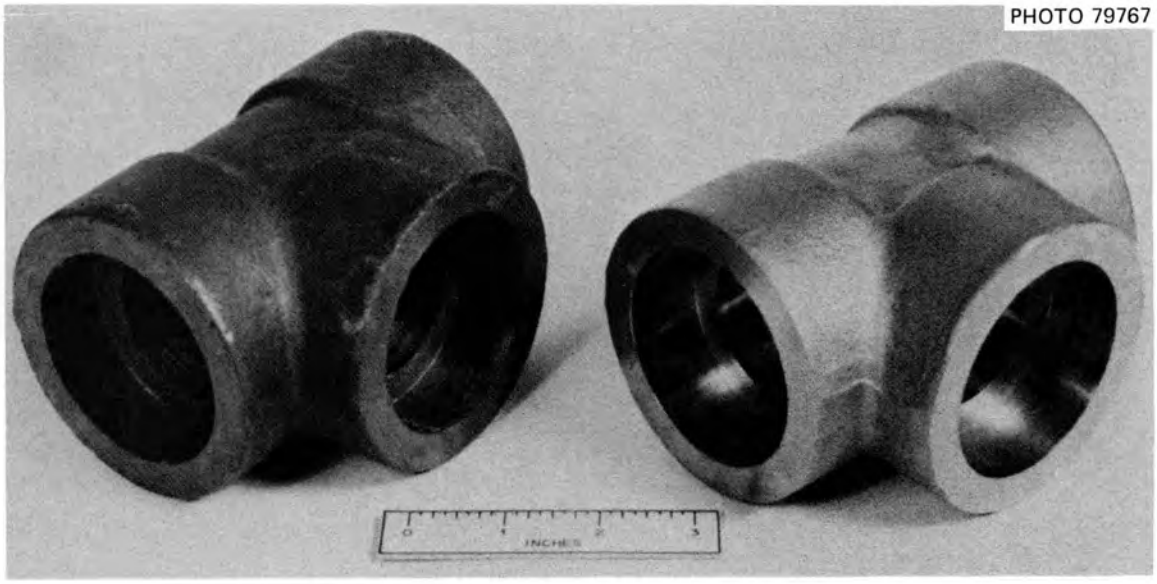

Fig. 12. Two-inch ANSI B16.11 3000-lb-class tees.

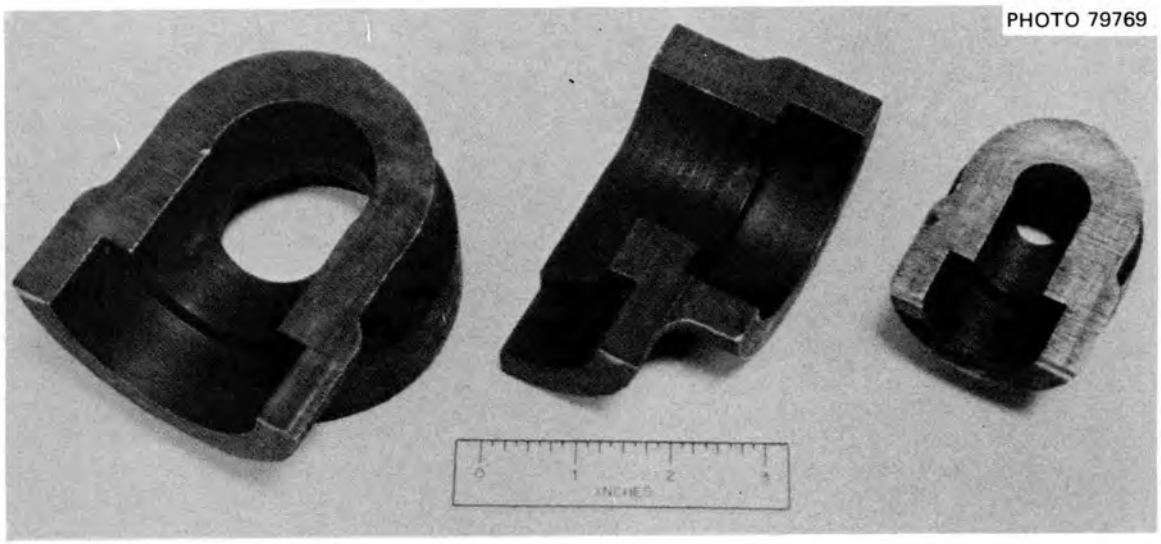

Fig. 13. Sections of ANSI B16.11 2-in. and 1-in., 6000-lb-class tees.

4. PRESSURE-TEMPERATURE RATINGS AND PIPE EQUIVALENCE

Standard Pressure Ratings

When using standard piping products, the Code requires in NB-3612.1 that the ratings given as functions of temperature in the appropriate standard shall not be exceeded, and ANSI B16.11-1966 includes such ratings for 3000- and 6000-lb-class socket-welding fittings. These ratings, listed in Table 5, are proportional to the pressure ratings for flanges and flanged fittings given in an earlier edition of ANSI B16.5 (ref. 9). The B16.11 standard also gives a correspondence between the pressure class of the fitting and the maximum pipe schedule intended for use with the fitting — sched 80 for the 3000-lb class and sched 160 for the 6000-lb class. It is permissible, however, to use a lighter-weight pipe with fittings of either pressure class. For example, both sched-40 and -80 pipe may be used with either 3000- or 6000-lb-class fittings, but sched-160 pipe may not be used with 3000-lb-class fittings.

For Class-1 piping, the Code also gives the following formula [Eq. (2), NB-3641.1] for computing the allowable design pressure for straight pipe, which is also, in effect, a function of temperature (different, however, from the temperature dependence of ANSI B16.11-1966):

$$P = \frac{2S_m(t_m - a)}{D_o - 2y(t_m - a)} ,$$

where S_m is the design stress intensity given as a function of temperature for various materials in Appendix I of the Code, t_m is the minimum wall thickness (87.5% of the nominal thickness), a is the corrosion allowance (taken herein as zero), D_o is the outside diameter of the pipe, and y = 0.4. Similar formulas for piping of Classes 2 and 3 are given in subparagraphs NC-3641.1 and ND-3641.1, respectively. Table 6 gives resulting calculated maximum pressures for several pipe sizes and materials of interest. For comparison, the pressure ratings from Table 5 for comparable socket-welding fittings are also given.

The values given in Table 6 show that in most cases the Code-allowable pressures for pipe (from 1/2- to 2-in. nominal size) are higher than the

Table 5. Pressure-temperature ratings of B16.11–1966 socket-welding fittings for various classes of steel

Service temperature (°F)	Nonshock working pressures (psi) for grade (and symbol) of material										
	Carbon steel (steel)	5 Cr (F5a)	9 Cr (F9)	1 1/4 Cr (F11)	2 1/4 Cr (F22)	18-8 (F304)	18-8LC (F304L)	18-8 Mo (F316)	18-8 Mo-LC (F316L)	18-8 Ti (F321)	18-8 Cb (F347)
						3000-lb class					
100	3000	3000	3000	3000	3000	2570	2140	3000	2140	3000	3000
150	2950	2950	2950	2950	2950	2425	2120	2950	2140	2950	2950
200	2915	2915	2915	2915	2915	2280	2100	2915	2140	2915	2915
250	2875	2875	2875	2875	2875	2170	1945	2875	2065	2875	2875
300	2845	2845	2845	2845	2845	2055	1795	2845	1990	2845	2845
350	2810	2810	2810	2810	2810	1965	1650	2810	1815	2810	2810
400	2775	2775	2775	2775	2775	1870	1510	2775	1645	2775	2775
450	2715	2715	2715	2715	2715	1790	1420	2715	1575	2715	2715
500	2605	2605	2605	2605	2605	1715	1330	2605	1510	2605	2605
550	2460	2460	2460	2460	2460	1650	1280	2460	1450	2460	2460
600	2310	2310	2310	2310	2310	1590	1250	2310	1395	2310	2310
650	2150	2150	2150	2150	2150	1535	1200	2150	1345	2150	2150
700	1960	2010	2010	2010	2010	1480	1170	2055	1295	2055	2055
750						1425	1140	1960	1250	1960	1960
800						1370	1100	1865	1205	1865	1865
						6000-lb class					
100	6000	6000	6000	6000	6000	5145	4285	6000	4285	6000	6000
150	5915	5915	5915	5915	5915	4855	4240	5915	4285	5915	5915
200	5830	5830	5830	5830	5830	4565	4200	5830	4285	5830	5830
250	5750	5750	5750	5750	5750	4340	3895	5750	4135	5750	5750
300	5690	5690	5690	5690	5690	4115	3595	5690	3980	5690	5690
350	5625	5625	5625	5625	5625	3930	3305	5690	3635	5625	5625
400	5550	5550	5550	5550	5550	3745	3020	5550	3295	5550	5550
450	5430	5430	5430	5430	5430	3585	2840	5430	3155	5430	5430
500	5210	5210	5210	5210	5210	3430	2660	5210	3020	5210	5210
550	4925	4925	4925	4925	4925	3305	2565	4925	2900	4925	4925
600	4620	4620	4620	4620	4620	3180	2500	4620	2785	4620	4620
650	4300	4300	4300	4300	4300	3070	2400	4300	2690	4300	4300
700	3920	4025	4025	4025	4025	2960	2340	4110	2595	4110	4110
750						2850	2280	3920	2500	3920	3920
800						2745	2225	3730	2415	3730	3730

Table 6. Allowable pressures for straight pipe[a] and comparable socket-welding fittings[b]

Nominal pipe size: Schedule No.	Nominal pipe size: Nominal diameter (in.)	Normalized allowable pressure,[a] P/S_m	Allowable pressures (psi): A106 grade B carbon steel, 100°F, Class 1 (S_m = 20 ksi)	A106 grade B carbon steel, 100°F, Classes 2 and 3 (S = 15 ksi)	A106 grade B carbon steel, 700°F, Class 1 (S_m = 16.8 ksi)	A106 grade B carbon steel, 700°F, Classes 2 and 3 (S = 14.3 ksi)	TP304 and 304H stainless steel, 100°F, Class 1 (S_m = 20 ksi)	TP304 and 304H stainless steel, 100°F, Classes 2 and 3 (S = 18.8 ksi)	TP304 and 304H stainless steel, 800°F, Class 1 (S_m = 15.1 ksi)	TP304 and 304H stainless steel, 800°F, Classes 2 and 3 (S = 15.2 ksi)	TP316 and 316H stainless steel, 100°F, Class 1 (S_m = 20 ksi)	TP316 and 316H stainless steel, 100°F, Classes 2 and 3 (S = 18.8 ksi)	TP316 and 316H stainless steel, 800°F, Class 1 (S_m = 15.8 ksi)	TP316 and 316H stainless steel, 800°F, Classes 2 and 3 (S = 15.9 ksi)
			Straight pipe[c]											
40	1/2	0.2498	4996	3747	4197	3572	4996	4696	3772	3797	4996	4696	3946	3972
	3/4	0.2037	4076	3055	3422	2913	4076	3830	3076	3096	4074	3830	3218	3239
	1	0.1905	3810	2857[d]	3200	2724	3810	3581	2877	2895	3810	3581	3010	3029
	1 1/4	0.1569	3138	2353[d]	2636	2244	3138	2949	2369	2385	3138	2949[d]	2478	2495
	1 1/2	0.1411	2822[d]	2116[d]	2370	2018	2822	2653[d]	2131	2145	2822[d]	2653[d]	2230	2243
	2	0.1189	2378[d]	1783[d]	1998	1700[d]	2378[d]	2235[d]	1795	1807	2378[d]	2235[d]	1878	1890
80	1/2	0.3490	6980	5235	5863	4990	6980	6561	5270	5305	6980	6561	5514	5549
	3/4	0.2860	5720	4290	4805	4090	5720	5377	4319	4347	5720	5377	4519	4547
	1	0.2633	5266	3950	4423	3765	5266	4950	3976	4002	5266	4950	4160	4186
	1 1/4	0.2190	4380	3285	3679	3132	4380	4117	3307	3329	4380	4117	3460	3482
	1 1/2	0.1989	3978	2983[d]	3342	2844	3978	3739	3003	3023	3978	3739	3142	3162
	2	0.1717	3434	2575[d]	2884	2455	3434	3228	2593	2610	3434	3228	2713	2730
160	1/2	0.4615	9230	6922	7753	6599	9230	8676	6969	7015	9230	8676	7292	7338
	3/4	0.4251	8502	6376	7142	6079	8502	7992	6419	6461	8502	7992	6716	6759
	1	0.3838	7676	5757[d]	6448	5488	7676	7215	5795	5834	7676	7215	6063	6102
	1 1/4	0.2946	5892[d]	4419[d]	4949	4213	5892	5538	4448	4478	5892[d]	5538[d]	4654	4684
	1 1/2	0.2887	5764[d]	4330[d]	4850	4128	5764	5427	4359	4388	5764[d]	5427[d]	4561	4590
	2	0.2812	5625[d]	4218[d]	4724	4021	5625	5286	4246	4274	5625[d]	5286[d]	4442	4471
			Socket-welding fittings											
Pressure class (lb)														
	3000		3000	3000	1960	1960	2570	2570	1370	1370	3000	3000	1865	1865
	6000		6000	6000	3920	3920	5145	5145	2745	2745	6000	6000	3730	3730

[a]Calculated values using Eq. (2): NB-3641.1; Eq. (4): NC-3641.1; and Eq. (4): ND-3641.1. $P/S = 1.75t/(D_o - 0.7t)$: See text for symbol definitions.

[b]Taken from Table 5.

[c]Allowable stress values from Appendix I of the Code (ref. 1): S_m values from Tables I-1.1 and I-1.2; S values from Tables I-7.1 and I-7.2.

[d]Allowable pressure for pipe is less than allowable pressure for corresponding-pressure-class fitting.

allowable pressures for the corresponding socket-welding fitting. In several cases, however, the reverse is true. It is also apparent from comparing the values in Tables 5 and 6 that no consistent relation exists between the ANSI B16.11-1966 pressure ratings for fittings and the Code-allowable design pressures for piping systems of the same materials at the same operating temperatures. For example, A106 grade-B carbon steel pipe and type 304 stainless steel pipe have the same Code-allowable pressures at 100°F but the pressure ratings for the corresponding socket-welding fittings are different; and further, although not indicated in Table 6, the difference increases as the temperature increases. Thus, in order to assure compliance with the Code, both sets of rules must be checked.

The 1973 edition of ANSI B16.11, however, revises the pressure-temperature ratings of the fittings to agree more closely with the Code. According to article 2.2 of that edition,

> "Ratings determined ... apply to any service within the scope of a section of the American National Standard Code for Pressure Piping (ANSI B31), or of a section of the ASME Boiler and Pressure Vessel Code, or of a legally enforced regulation which establishes pressure design requirements for pipe.
>
> "Design temperature and other service conditions shall be limited as provided by the applicable code or regulation for the material of construction of the fitting. Within these limits the maximum allowable pressure of a fitting shall be that computed for straight seamless pipe of equivalent material ... ."

Thus, simply updating Table NB-3691.1 to replace the 1966 version of B16.11 with the 1973 version will eliminate a potentially confusing condition with respect to the maximum allowable pressure ratings of B16.11 fittings.

Pipe Equivalence

In order to use stress indices with the design procedures of NB-3650, it is necessary to define an "equivalent" pipe for a fitting. This is because the design-criteria equations of NB-3650, listed earlier in Table 1, are in terms of nominal stresses in the so-called equivalent pipe, with dimensions D_o, D_i, t, etc., for specific piping products defined in subparagraph NB-3683.1. For ANSI-standard butt-welding fittings, the equivalent pipe is defined as straight pipe having the same nominal size and

schedule number as identified by the fitting. The equivalent pipe for the fitting is thus independent of the wall thickness of the pipe that may be welded to the fitting in application. This is not only convenient but is necessary in order to uniquely define the calculated stresses in the fitting as functions of the loads.

It is therefore appropriate to follow the same precedent in defining the equivalent pipe for socket-welding fittings. Since the 3000-lb class is designated for use with pipe sizes up to sched 80 and the 6000-lb class for pipe sizes up to sched 160, it is appropriate to define the equivalent pipe as sched 80 for 3000-lb-class fittings and sched 160 for 6000-lb-class fittings.* With these definitions, the calculated stresses in the body of a B16.11 socket-welding fitting will not depend on the wall thickness of the pipe. In accordance with present Code practice, however, the calculated stresses in the fillet weld joining the pipe and the fitting will depend on the nominal wall thickness of the pipe.

Table NB-3683.2-1 presently contains stress indices for girth butt welds and for girth fillet welds; and the design procedures of NB-3650 require that these welds be checked for compliance independently of the checks for any other component. The equivalent pipe dimensions for both types of girth welds are the same as for the nominal size pipe actually used in the design.

Stress indices for ANSI B16.11 socket-welding fittings, to be used with the appropriate equivalent pipe dimensions, are given in the next three chapters for internal pressure, bending moment, and thermal-gradient loadings, respectively. All of the stress indices are then summarized and compared with corresponding indices from the Code (Table NB-3683.2-1) for the girth-fillet welds that join the fitting to the pipe.

---

*For 9000-lb-class fittings, defined by ANSI B16.11-1973, the equivalent pipe would be double extra strong (XXS).

5. STRESS INDICES FOR INTERNAL PRESSURE

Primary-Stress B_1 Indices

Primary-stress indices, used in conjunction with Eq. (9) of NB-3652, are intended to protect the piping system against plastic collapse and/or excessive deformation and are normally established on the basis of results from limit-load tests. Since information of this type is not available for socket-welding fittings, the minimum-pressure bursting strength of the fitting, specified in the B16.11 standard, is used as an alternate basis for establishing the value for B_1. According to paragraph 6.2 of ANSI B16.11-1966,

> "... the actual bursting strength of fittings shall be not less than the computed bursting strength of the pipe of the designated schedule number and material. To determine the relative strength of the fitting, straight pipe of the designated wall thickness and material shall be welded to each end, at least six inches in length but not less than twice the outside diameter of the pipe, and with proper end closures applied beyond the minimum length of straight pipe. Hydrostatic pressure shall be applied until either the fitting or one of the short ends of pipe bursts ..."*

The computed bursting strength of the pipe, P_u, for comparison with the test burst pressure is to be obtained using the formula

$$P_u = 2S_u t/D_o \ , \qquad (1)$$

where S_u is the minimum specified tensile strength of the pipe material, t is the minimum wall thickness (87.5% of nominal thickness), and D_o is the outside diameter of the pipe. Although the standard does not specifically designate the schedule number of the pipe to be used in the pressure-burst test, it can be deduced by comparison of dimensional data in the standard that the intent is to use sched-80 pipe with 3000-lb-class fittings and sched-160 pipe with 6000-lb-class fittings.** The minimum

*The last sentence is modified in ANSI B16.11-1973 to read: "Hydrostatic pressure shall be applied until at least the computed bursting pressure is achieved." Other changes are also made that effectively increase the computed bursting pressure by about 15 to 20%.

**This point is clarified in ANSI B16.11-1973.

specified tensile strength of the pipe material is given by reference to the ASTM Standards.[7,8] For A106 grade-B carbon-steel pipe at 100°F, S_u = 60,000 psi; for type-304 stainless-steel pipe, S_u = 75,000 psi. Several typical minimum burst pressures computed according to Eq. (1) are given below. All of the values are considerably larger than the allowable operating pressures given in Table 6.

Typical minimum burst pressures for ANSI B16.11 fittings

Nominal pipe size (in.)	3000-lb class		6000-lb class	
	Carbon steel[a]	Stainless steel[b]	Carbon steel	Stainless steel
1/2	18,375	22,968	23,375	29,219
1	14,292	17,866	19,962	24,952
2	9,638	12,047	15,164	18,955

[a]A106 grade-B carbon-steel pipe.

[b]TP304 stainless-steel pipe.

Although we were unable to find published burst-pressure data for socket-welding fittings, some unpublished test data on 3000-lb-class austenitic-stainless-steel fittings were provided by one of the manufacturers.[4] The results are shown in Table 7. In these tests, a group of fittings were tested together by welding up a manifold with fittings separated by required lengths of sched-80 straight pipe. Failures all occurred in the straight pipe at locations remote from the fittings; hence, a single value is given for the burst pressure of each group of fittings. As shown in the table, the test burst pressures were all greater than those required by the B16.11 standard.

Conformance with the dimensional and burst-pressure requirements of ANSI B16.11 apparently gives adequate assurance that the basic designs of B16.11 socket-welding fittings are suitable for use at their rated static pressures. Since these are the same criteria that were used originally to establish the primary-stress indices (B_1) for butt-welding fittings, it seems reasonable to establish B_1 indices for ANSI B16.11 socket-welding fittings on the same basis. We therefore recommend the following:

Socket-welding fitting	B_1 index
Tees	1.0
90 and 45° elbows	1.0
Couplings	0.5

Primary-Plus-Secondary and Peak-Stress Indices

Although burst-pressure tests yield useful information for establishing primary-stress indices, they do not give any information regarding secondary or peak stresses. In order to establish stress indices for the secondary and peak-stress categories it is necessary to use other information.

Table 7. Results of burst-pressure tests on 3000-lb-class austenitic-stainless-steel socket-welding fittings

Nominal size (in.)	Type of fitting	Material	Test burst-pressure[a] (psi)	Required burst-pressure[b] (psi)
1/2	Tee	304L	27,000+[c]	21,440
	90° elbow	316L	27,000+	21,440
	45° elbow	347	27,000+	22,970
	Coupling	304L	27,000+	21,440
3/4	Tee	304L	21,000	17,970
	90° elbow	304L	21,000	17,970
	45° elbow	304L	21,000	17,970
	Coupling	304	21,000	19,250
1	Tee	304L	19,600	16,670
	90° elbow	304L	19,600	16,670
	45° elbow	304	19,600	17,870
	Coupling	304	19,600	17,870
1	Tee	304	19,500	17,870
	90° elbow	304	19,500	17,870
2	Tee	304	15,400	12,050
	90° elbow	304	15,400	12,050

[a]All failures occurred in the pipe, remote from the fittings.

[b]These values are based on ANSI B16.11-1966 requirements. Values based on ANSI B16.11-1973 would be 15 to 20% higher.

[c]Test assembly did not fail; value cited is the pressure capacity of the pump.

Traditionally, strain-gage data and/or fatigue-test data have been used for this purpose. To our knowledge, however, there are no controlled-test data of this type available for socket-welding fittings, although we did find a few documented cases of fatigue failures in nuclear piping systems (see Appendix B). Most of the reported failures were in the fillet welds joining the fitting to the pipe. One failure, however, occurred in the body of a socket-welding coupling, and might have been caused by internal pressure and/or cyclic-pressure fatigue. Unfortunately, no information was given on either the magnitudes of the loads or the number of cycles to failure. The information is thus of questionable value for developing stress indices, although it is useful to know that failures have occurred in the bodies of fittings as well as in the joining welds.

In the absence of more-definitive information, proposed stress indices C_1 and K_1 for pressure loading are based on the following analysis:

Socket-welding fittings are often used in supply lines for hydraulic presses, and over a period of years they are subjected to many cyclic pressure loadings. If we assume that under these service conditions fittings do not fail, and make further assumptions that appear to be conservative, we can develop a reasonable analytical model upon which to base the magnitude of the stress-index product K_1C_1.* Further assumptions can then be used to determine individual values for K_1 and C_1. We therefore assumed a set of service conditions consisting of the following:

1. The range of cyclic pressure during service never exceeds one-half of the B16.11 rated pressure. For 3000-lb-class fittings, the design pressure cycle would then be from 0 to 1500 psi and back to 0.

2. The fittings are subjected to 160 cycles per day for ten years, a total of 584,000 cycles. Using a safety factor of 20 on cycles** indicates that the fittings would be adequate for 29,200 design cycles.

With these assumptions, the cyclic-pressure-term portion of Eq. (11) of NB-3653.2 is

---

*The stress-index product K_1C_1 is used in Eq. (11) of NB-3600 to evaluate the design fatigue life of fittings for specified cyclic pressure loading conditions.

**ASME design fatigue curves are based on a safety factor of 20 on cyclic life or 2 on maximum stress, whichever gives the lower value.

$$S_p = K_1C_1P_oD_o/2t \ ,$$

where S_p is the peak-stress-intensity range, P_o is the range of cyclic pressure loading (in this case P_o equals one-half the rated pressure of the fitting at 100°F or $P_r/2$), D_o is the nominal outside diameter, and t is the nominal wall thickness of the equivalent pipe. Then using Eq. (14) of NB-3653.6,

$$S_a = K_eS_p/2 \ ,$$

where S_a refers to the stress-intensity amplitude corresponding to 29,200 design cycles. Assuming further that the factor $K_e = 1.0$, which is equivalent to assuming that the primary-plus-secondary-stress-intensity range S_n is less than $3S_m$ [i.e., Eq. (10) of NB-3653.1 is satisfied], gives a relationship for K_1C_1, in terms of known quantities, of

$$K_1C_1(P_r/2)D_o/2t = 2S_a \ . \qquad (2)$$

Since most of the service experience is for fittings made of SA-181 grade-1 carbon steel, it is appropriate to obtain the value of S_a from Fig. I-9.1, "Design Fatigue Curves for Carbon, Low-Alloy, and High-Tensile Steels," Appendix I of the Code. At 29,200 cycles, Fig. I-9.1 gives 28,000 psi for S_a. Solving Eq. (2) for K_1C_1 thus gives

$$K_1C_1 = 224{,}000(t/D_o)/P_r \ . \qquad (3)$$

According to Eq. (3), K_1C_1 will increase with decreasing nominal pipe size because t/D_o increases as the nominal pipe size decreases for both sched-80 and sched-160 pipe (see Table 3). For the 12 class-size combinations covered in this report, the range of K_1C_1 is from 5.39 for the 2-in., 6000-lb-class fittings to 13.07 for the 1/2-in., 3000-lb-class fittings. The average for all class-sizes is 8.10. In view of the conservatism used in deriving Eq. (3), it appears adequate to round the average up to 9.0 and offer this value for K_1C_1.

Inasmuch as the above value for K_1C_1 is based entirely on a fatigue evaluation, separate values for K_1 and C_1 are somewhat arbitrary. In the

above development, however, it was assumed that the primary-plus-secondary-stress intensity was always less than $3S_m$; that is,

$$S_n = C_1 P_o D_o / 2t \leq 3S_m \ . \qquad (4)$$

Accordingly, it is appropriate to obtain the value for C_1 from Eq. (4). Within the range of fittings covered in this report (1/2- to 2-in. nominal size, 3000- and 6000-lb classes), the maximum value of $P_o D_o / 2t$ is 20,773 psi (for 2-in., 6000-lb-class fittings with P_o equal to the rated pressure at 100°F). The minimum value for the design stress intensity for Class-1 piping, using materials-property data from Appendix I of the Code (see also Table 6) is $3S_m$ = 50,400 psi for carbon-steel pipe at 700°F and 45,300 psi for stainless-steel piping at 800°F; and the minimum value for the allowable stress for Class-2 and -3 carbon-steel piping is 3S = 42,900 psi. Thus, any value of C_1 less than or equal to 2.065 will satisfy Eq. (4) for any pressure less than or equal to the rated pressure of the fitting. We therefore propose that C_1 be set equal to 2.0. With $K_1 C_1 = 9$, the value for K_1 becomes 4.5.

Stress-index values of $C_1 = 2.0$ and $K_1 = 4.5$ should be adequately conservative for socket-welding tees and elbows, which have the same general shape in the critical crotch region (see Figs. 1–9). For couplings, the values are probably overly conservative and smaller values can be justified. As shown by the sketch in Table 2, a B16.11 coupling is simply a cylindrical shell with an interior stop ring at the base of the socket, where the possibility exists for a sharp machined corner being produced during fabrication. To cover this condition, the value of $K_1 = 4.5$ should be retained. Otherwise, the existing stress-index values for straight pipe should be adequate (i.e., $B_1 = 0.5$ and $C_1 = 1.0$).

Since the values being recommended for C_1 and K_1 were based on an analytical model in which 3000-lb-class carbon-steel fittings were pressure cycled between zero and one-half their rated design pressure, it is of interest to determine the permissible number of pressure cycles for other conditions. Table 8 gives calculated results for a sampling of B16.11 tees, elbows, and couplings that are cycled between zero and their full rated pressure.

Table 8. Calculated[a] fatigue design life for selected B16.11 fittings subjected to cyclic pressure loads between zero and their rated pressure

Nominal pipe size (in.)	Pressure class (lb)	Material[b]	Temperature (°F)	Pressure rating[c] (psi)	B16.11 tees and elbows		B16.11 couplings	
					Peak-stress amplitude (S_a)	Design life (cycles)	Peak-stress amplitude (S_a)	Design life (cycles)
1/2	3000	CS	100	3000	38,600	9,000	19,300	100,000
			700	1960	25,200	40,000	12,600	$>10^6$
		SS	100	3000	38,600	80,000	19,300	$>10^6$
			800	1370	17,600	$>10^6$	8,800	$>10^6$
	6000	CS	100	6000	60,600	2,500	30,300	20,000
			700	3920	39,600	8,000	19,800	100,000
		SS	100	6000	60,600	9,000	30,300	300,000
			800	2745	27,700	800,000	13,900	$>10^6$
1	3000	CS	100	3000	49,600	4,000	24,800	40,000
			700	1960	32,400	18,000	16,200	250,000
		SS	100	3000	49,600	20,000	24,800	$>10^6$
			800	1370	22,600	$>10^6$	11,300	$>10^6$
	6000	CS	100	6000	71,000	1,500	35,500	12,000
			700	3920	46,400	6,000	23,200	55,000
		SS	100	6000	71,000	4,500	35,500	130,000
			800	2745	32,500	250,000	16,300	$>10^6$
2	3000	CS	100	3000	73,500	1,400	36,800	10,000
			700	1960	48,000	5,000	24,000	46,000
		SS	100	3000	73,500	4,000	36,800	100,000
			800	1370	33,600	200,000	16,800	$>10^6$
	6000	CS	100	6000	93,500	750	46,800	5,000
			700	3920	61,100	2,000	30,600	19,000
		SS	100	6000	93,500	1,600	46,800	27,000
			800	2745	42,800	50,000	21,400	$>10^6$

[a]Design life calculated using NB-3650 rules; $C_1 = 2.0$, and $K_1 = 4.5$ for tees and elbows; $C_1 = 1.0$, $K_1 = 4.5$ for couplings; and Figs. I-9.1 for carbon steel and I-9.2 for stainless steel.

[b]CS = SA-181-1 carbon steel; SS = type 304 stainless steel.

[c]ANSI B16.11-1966 pressure ratings from Table 4.

In summary, the recommended stress indices for B16.11 socket-welding fittings for pressure loading are:

Type of fitting	B_1	C_1	K_1
Tees	1.0	2.0	4.5
90 and 45° elbows	1.0	2.0	4.5
Couplings	0.5	1.0	4.5

Comparable indices for the girth fillet weld used to attach the fitting to the pipe are: $B_1 = 0.75$, $C_1 = 2.0$, and $K_1 = 3.0$.

Development of the indices for fillet welds, including their specific application to B16.11 socket-welding fittings, is included in ref. 10. The indices recommended therein were adopted by the Code at the Main Boiler Code Committee meeting of Nov. 3, 1972.

6. STRESS INDICES FOR MOMENT LOADINGS

Insofar as the authors are aware, no published test data exist on the effects of moment loadings on ANSI B16.11 fittings. Thus, as in the previous chapter, other means must be used to determine reasonable values for the stress indices. For the case where 3000-lb-class fittings are used in a sched-40 piping system (or any case where the fittings are heavier than the attached pipe), one might expect that if fatigue failures occurred they would occur in the pipe at the toe of the fillet-weld joints rather than in the body of the fittings because of the difference in the relative wall thickness of the two components. However, in piping systems where the relative wall thicknesses are comparable, such as in a sched-80 piping system using 3000-lb class fittings, it seems possible that failures could occur in the fittings as well as in the pipe. Proposed stress indices for fittings must therefore protect the design against this possibility as well. Obviously, a few data points from well-conducted tests are needed. However, in the absence of such data, we will base the proposed indices for moment loadings on comparable indices for butt-welding components listed in Table NB-3683.2-1 of the Code.

Socket-Welding Tees

ANSI B16.11 socket-welding tees and ANSI B16.9 butt-welding tees are similar in shape except for the relatively sharper transition radii on the outer surface of the socket-welding tees and for the reentrant corner at the bottom of the socket. Under bending-moment loads, the maximum stresses in butt-welding tees occur in the transition region between the branch and the run and apparently increase as the radius becomes smaller.* We conjecture that a similar situation exists for socket-welding tees. Although neither the ANSI B16.9 nor the ANSI B16.11 standard specifies a minimum radius for this transition, the radius is normally much larger for B16.9 than for B16.11 tees. It thus seems advisable to increase the existing stress indices for butt-welding tees by some factor to arrive at appropriate indices for B16.11 socket-welding tees; a factor of 1.5 is recommended.

The existing C_2 index for B16.9 butt-welding tees is given by the formula**

$$C_2 = 0.67(R_m/T_r)^{2/3} ,$$

where $R_m = (D_o - t)/2 = r$ is the mean radius and $T_r = t$ is the nominal wall thickness of the equivalent run pipe. The primary-stress index is given as $B_2 = 0.75C_2$, and the peak-stress index is given as $K_2 = 1.0$. If we restrict the use of the stress indices developed herein to socket-welding fittings that are forged to shape so that there are no sharp corners on the outer surface, then a peak-stress-index value of $K_2 = 1.0$ is probably adequate. Accordingly, the recommended moment-loading stress indices for ANSI B16.11 socket-welding tees are:

$$C_2 = (1.5)(0.67)(R_m/T_r)^{2/3} = (r/t)^{2/3} ,$$

---

*Efforts are underway in other parts of the ORNL Piping Program to more precisely establish this dependency. It is expected that recommendations will be developed for butt-welding tees to limit the use of established stress indices to tees with transition radii larger than some minimum value.

**Footnote 9 to Table NB-3683.2-1 of the Code.

$$B_2 = 0.75C_2 = 0.75(r/t)^{2/3} ,$$

and

$$K_2 = 1.0 ,$$

where r and t are the mean radius and nominal wall thickness, respectively, of the equivalent pipe.

Socket-Welding Elbows

ANSI B16.11 socket-welding elbows appear, at first, to be shaped quite differently from standard butt-welding elbows. As shown earlier by the dashed lines in Figs. 3, 4, 7, and 8, socket-welding elbows are most similar to "short-radius" butt-welding elbows[11] for which the bend radius R is approximately twice the mean radius r of the pipe. The socket-welding elbows, however, have a shorter bend radius and relatively heavy reinforcing socket rings at the ends. Because of these basic differences in shape, one is hesitant about adopting the stress indices given in the Code for butt-welding elbows without confirming experimental or analytical data. On closer examination, however, it appears that the differences in shape should result in lower maximum stresses for the socket-welding elbows.

The bending-moment stress indices currently given in the Code (Table NB-3683.2-1) for ANSI standard butt-welding elbows are: $C_2 = 1.95\,[(r/t)(r/R)]^{2/3} \geq 1.5$, $B_2 = 0.75C_2$, and $K_2 = 1.0$, where r is the mean radius of the cross section, t is the nominal wall thickness, and R is the bend radius. These indices are based on numerous experimental and analytical studies and represent an upper bound for the maximum stress intensity in the elbow due to an in-plane or out-of-plane bending moment. They are also consistent with theoretical solutions based on the assumption that every cross section deforms the same (i.e., variations along the length of the elbow are neglected). It is known, however, that pipe or flanges welded to the ends of a butt-welding elbow will significantly reduce the maximum stresses caused by bending.* It is our belief that

*Various experimental studies show this to be true, and analytical parameter studies are currently in progress to more precisely define the influence of various structures welded to the ends of the elbow.

these so-called end effects will more than compensate for the influence of the different shape of socket-welding elbows.

We therefore recommend that the indices for "short-radius" butt-welding elbows ($r/R = 1/2$) be used for socket-welding elbows. Thus:

$$C_2 = 1.23(r/t)^{2/3} ,$$

$$B_2 = 0.75C_2 ,$$

and

$$K_2 = 1.0 ,$$

where r and t are the mean radius and nominal wall thickness, respectively, of the equivalent pipe.

Socket-Welding Couplings

As noted earlier, a B16.11 coupling is simply a cylindrical shell with an interior stop ring at the base of the socket, where the possibility exists for a sharp machined corner being produced during fabrication. To cover this condition, it is recommended that the peak-stress index K_2 be taken as 4.5, the same as proposed for K_1 in the previous chapter. For the other indices, the existing values for straight pipe should be adequate (i.e., $B_2 = 1.0$ and $C_2 = 1.0$).

Summary of Proposed Stress Indices for Moment Loadings

Proposed stress indices for ANSI B16.11 socket-welding elbows under moment loadings, to be used with the design-analysis procedures of Paragraph NB-3650 for Class-1 piping systems, are given in Table 9. Corresponding stress indices, taken from the Code, for butt-welding fittings and for the girth fillet welds used to attach the fitting to the pipe are also given for comparison. Since the C_2 indices for tees and elbows are given as functions of the dimensionless ratio (r/t), numerical values for these are given in Table 10 over the range of applicable nominal pipe sizes (i.e., 1/2 to 2 in.). For these sizes, the numerical values are quite modest, ranging from a minimum of 1.45 for 1/2-in., 6000-lb-class tees to a maximum of 3.57 for 2-in., 3000-lb-class elbows.

Table 9. Summary of stress indices for moment loadings

Type of fitting	Primary-load index (B_2)	Primary-plus-secondary-load stress index (C_2)	Peak-stress index (K_2)
ANSI B16.11 socket-welding tee	$0.75C_2$	$(r/t)^{2/3}$	1.0
ANSI B16.11 elbow (90 and 45°)	$0.75C_2$	$1.23(r/t)^{2/3}$	1.0
ANSI B16.11 socket-welding coupling	1.0	1.0	4.5
ANSI B16.9 butt-welding tee	$0.75C_2$	$0.67(r/t)^{2/3}$	1.0
ANSI B16.28, etc. butt-welding elbows	$0.75C_2$	$1.95[(r/t)(r/R)]^{2/3}$	1.0
Straight pipe remote from welds	1.0	1.0	1.0
Girth fillet weld[a]	1.5	2.1	2.0

[a]Development of the indices for fillet welds, including specific application to fillet welds between pipe and socket-welding fittings is given in Rodabaugh and Moore.

Table 10. C_2 indices for B16.11 socket-welding tees and elbows for nominal pipe sizes of 1/2 to 2 in.

Nominal size (in.)	Fitting class (lb)	Nominal dimensions			C_2 values	
		D_o (in.)	t (in.)	r/t	Tee $[1.00(r/t)^{2/3}]$	Elbow $[1.23(r/t)^{2/3}]$
1/2	3000	0.840	0.147	2.357	1.77	2.18
	6000		0.187	1.746	1.45	1.78
3/4	3000	1.050	0.154	2.909	2.04	2.51
	6000		0.218	1.908	1.54	1.89
1	3000	1.315	0.179	3.173	2.16	2.66
	6000		0.250	2.130	1.66	2.04
1 1/4	3000	1.660	0.191	3.846	2.46	3.02
	6000		0.250	2.820	1.20	2.46
1 1/2	3000	1.900	0.200	4.250	2.62	3.23
	6000		0.281	2.881	2.03	2.49
2	3000	2.375	0.218	4.947	2.90	3.57
	6000		0.343	2.962	2.06	2.54

Comparison of Design Fatigue Lives for Socket-Welding Fittings and Girth Fillet Welds

From the piping-system-design point of view, one of the more important questions concerning the use of socket-welding fittings is whether the fillet weld joining the fitting to the pipe or the fitting itself is more likely to fail under cyclic loading. According to the present Code philosophy, the component with the larger alternating stress intensity, S_{alt}, will fail first,* where S_{alt} is determined by the procedures given in Subparagraph NB-3653. Therefore, to determine whether the fillet weld or the fitting itself will govern the piping-system design (i.e., fail first),

*A more precise statement is that the allowable number of design cycles permitted by the Code is a decreasing function of the magnitude of the alternating stress intensity S_{alt}.

it is necessary to determine comparative values of S_{alt} for the same loading conditions.

In the following example, it is shown that under certain conditions the allowable cyclic design life will be shorter for the fillet weld than for the fitting, while for other conditions the reverse will hold. In this discussion, we consider a carbon-steel piping system of either sched 80 or sched 160, with 3000-lb- or 6000-lb-class carbon-steel fittings, respectively, loaded with a cyclic moment whose range is equal to or less than that required to give a maximum stress intensity in the pipe of $3S_m$.

For a cyclic-moment-loading range of magnitude M_i acting alone (i.e., in the absence of other loadings), a determination of S_{alt} reduces to evaluating the following set of equations (obtained from Table 1 given earlier):

$$S_{alt} = K_e S_p/2 \ , \tag{5a}$$

where

$$S_p = K_2 C_2 M_i/Z \tag{5b}$$

and

$$K_e = 1.0 \quad \text{for } S_n \le 3S_m \ , \tag{5c}$$

$$K_e = 1.0 + \frac{(1-n)}{n(m-1)}\left(\frac{S_n}{3S_m} - 1.0\right) \quad \text{for } 3S_m \le S_n \le 3mS_m \ , \tag{5d}$$

or

$$K_e = \frac{1}{n} \quad \text{for } S_n \ge 3mS_m \tag{5e}$$

with

$$S_n = C_2 M_i/Z \ . \tag{5f}$$

The section modulus $Z = (\pi/32)(D_o^4 - D_i^4)/D_o$ is taken as that of the equivalent pipe for the fitting and as that of the nominal size of the pipe that is actually used for the fillet weld. In the first part of this discussion we assume that both section moduli are the same. The design stress intensities are given in Appendix I of the Code for the various materials;

m and n are materials parameters given in Subsubparagraph NB-3228.3. For carbon steel, S_m = 20,000 psi, m = 3.0, and n = 0.2.

In the following, each piping product (pipe, fillet weld, and fitting) will be subjected to the same loadings, but will have different stress ranges depending on the numerical values of the stress indices. Therefore, a separate set of equations must be written for each piping product.

If the maximum-stress-intensity range in the pipe is expressed as

$$(M_i/Z)_{pipe} = AS_m \qquad (A \leq 3)$$

and the appropriate materials parameter values m = 3, n = 0.2, and stress indices from the following table are substituted into Eqs. (5), a separate set of equations can be written for each piping product.

Stress indices for use in Eqs. (5)

Product	C_2	K_2
Straight pipe	1.0	1.0
Fillet weld	2.1	2.0
Socket welding coupling	1.0	4.5
Socket welding tees and elbows*	C_{2f}	1.0

*Numerical values of C_{2f} taken from Table 10.

The resulting equations are as follows:

For straight pipe,

$$(S_n)_{pipe} = AS_m \qquad (A \leq 3) \ , \tag{6a}$$

$$(K_e)_{pipe} = 1.0 \ , \tag{6b}$$

$$(S_p)_{pipe} = AS_m \ , \tag{6c}$$

and

$$(S_{alt})_{pipe} = (1/2)AS_m \ . \tag{6d}$$

For fillet welds,

$$(S_n)_w = 2.1AS_m \qquad (A \le 3) \ , \tag{7a}$$

$$(K_e)_w = 1.0 \qquad (A \le 3/2.1 \le 1.429) \ , \tag{7b}$$

$$(K_e)_w = 1.0 + 2(0.7A - 1) \qquad (1.429 \le A \le 3) \ , \tag{7c}$$

$$(S_p)_w = 4.2AS_m \ , \tag{7d}$$

and

$$(S_{alt})_w = 2.1(K_e)_w AS_m \ . \tag{7e}$$

For socket-welding couplings,

$$(S_n)_c = AS_m \qquad (A \le 3) \ , \tag{8a}$$

$$(K_e)_c = 1.0 \qquad (A \le 3) \ , \tag{8b}$$

$$(S_p)_c = 4.5AS_m \ , \tag{8c}$$

and

$$(S_{alt})_c = 2.25AS_m \ . \tag{8d}$$

For socket-welding tees and elbows,

$$(S_n)_f = C_{2f}AS_m \qquad (A \le 3) \ , \tag{9a}$$

$$(K_e)_f = 1.0 \qquad (C_{2f}A \le 3) \ , \tag{9b}$$

$$(K_e)_f = 1.0 + 2\left(\frac{C_{2f}A}{3} - 1.0\right) \qquad (3 \le C_{2f}A \le 9) \ , \tag{9c}$$

$$(K_e)_f = 5.0 \qquad (C_{2f}A \ge 9) \ , \tag{9d}$$

$$(S_p)_f = C_{2f}AS_m \ , \tag{9e}$$

and

$$(S_{alt})_f = 1/2(K_e)_f C_{2f}AS_m \ . \tag{9f}$$

For the case in which a socket-welding coupling is used, it can be seen from Eqs. (7c), (7e), and (8d) that if $A \le 1.48$, then S_{alt} for the coupling [Eq. (8d)] will be slightly larger (2.25 vs 2.1) than S_{alt} for

the weld [Eq. (7e)]. In this case, the coupling will fail before the weld. When $A > 1.48$, the weld is predicted to fail first. Note, however, that these conclusions are based entirely on the relative values of the stress indices, which in turn are based on inadequate cyclic-fatigue-test data. If adequate test data were to become available, the indices could be changed to reflect the test results.

The case in which a socket-welding tee or elbow is used is slightly more complicated because the stress indices are given in parametric form rather than as constants. For this case, it is more convenient to determine the minimum value of C_{2f} (the stress index for the fitting) as a function of the loading-range parameter A for which S_{alt} will be the same for both components [i.e., $(S_{alt})_w = (S_{alt})_f$]. If C_{2f} is larger than this critical value, the fitting will fail first; if it is smaller, the fillet weld will fail first.

For this case there are three distinct loading regimes. If K_e for both the fillet weld and the fitting is 1.0 [Eqs. (7b) and (9b)], the critical value for C_{2f}, obtained by setting Eq. (7e) equal to Eq. (9f), is

$$C_{2fc} = 4.2 \ . \tag{10}$$

Equation (10) is valid for $A \leq 3/4.2 \leq 0.714$.

If $0.714 \leq A \leq 1.429$, then K_e for the fillet weld equals 1.0 [Eq. (7b)], and K_e for the fitting is between 1.0 and 5.0 [Eq. (9c)]. The critical value for C_{2f}, obtained by setting Eq. (7e) equal to Eq. (9f), is found to be a quadratic function of A. Thus,

$$C_{2fc} = (1/4A)(3 + \sqrt{100.8A + 9}) \ . \tag{11}$$

If $1.429 \leq A \leq 3$, then K_e for both the fillet weld and the fitting is greater than 1 [Eqs. (7c) and (9c)]. The critical value for C_{2f} for this case is also given by a quadratic function of A:

$$C_{2fc} = (1/4A)(3 + \sqrt{141.12A^2 - 100.8A + 9}) \ . \tag{12}$$

Figure 14 shows C_{2fc} as a function of A for all three regions. The minimum value of C_{2fc} is 2.69 when $A = 1.429$, and the maximum stress index

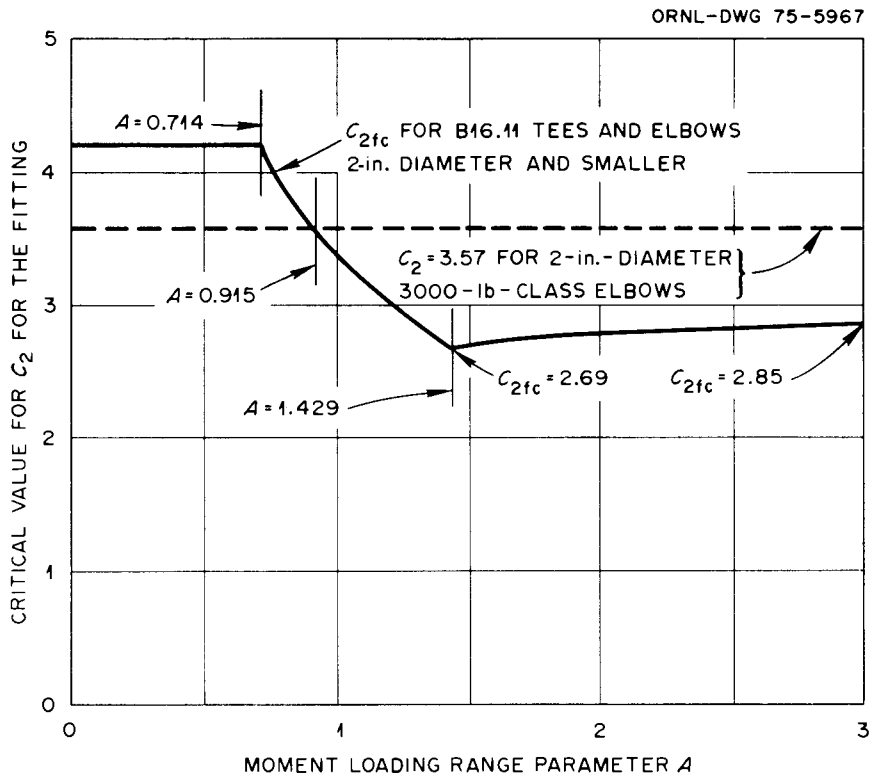

Fig. 14. Critical value of C_2 for B16.11 elbows and tees as a function of the cyclic-bending-moment-stress range AS_m in the attached pipe.

C_2 from Table 10 is 3.57 for 2-in.-diam, 3000-lb-class elbows. Thus, if the cyclic bending-moment-stress range in the pipe is less than $0.915S_m$ [from Eq. (11) with $C_{2fc} = 3.57$] or if the value of C_2 for the fitting is less than 2.69, then S_{alt} will be larger in the weld than in the fitting, and the analysis indicates that the weld will fail first. The value of C_2 from Table 10 is larger than 2.69 for only the three 3000-lb-class elbows larger than 1-in.-diam and for the 2-in.-diam, 3000-lb-class tee. Thus, the analysis predicts that the bodies of these fittings may fail before the fillet welds if the bending-moment-stress range in the pipe is greater than $0.915S_m$. For the other 20 (of 24) fittings listed in Table 10, the fillet weld is always predicted to fail first.

Table 11 shows design-fatigue-cycle comparisons between the 2-in., 3000-lb-class elbow ($C_2 = 3.57$) and the fillet weld for several nominal stress ranges up to $S_n = 3S_m$ (60,000 psi) in the corresponding sched-80 pipe. Values in the table show that for nominal stress ranges greater than about $1.5S_m$ (30,000 psi) the allowable number of design cycles for the fitting is quite low ($N \leq 260$) compared with that of the fillet weld ($N \leq 1600$). In this case it might be advisable to use a 6000-lb-class fitting in the sched-80 pipeline.

For piping systems in which the equivalent pipe schedule for the fitting is heavier than the nominal schedule of the attached pipe, the analysis given in Eqs. (6) through (12) must be modified to include the heavier section modulus of the fitting. If we let G represent the ratio of the section modulus of the pipe Z_p to that of the fitting Z_f,

$$G = Z_p/Z_f \ , \tag{13}$$

then equations similar to Eqs. (8) and (9) for couplings and for tees and elbows, respectively, can be generated. Equations (6) and (7) for straight pipe and for the fillet weld, respectively, need not be modified.

For socket-welding couplings,

$$(S_n)_c = AGS_m \qquad (A \leq 3) \ , \tag{14a}$$

and

$$(K_e)_c = 1.0 \qquad (AG \leq 3) \ ; \tag{14b}$$

Table 11. Comparison of design cycles for girth fillet weld with that for 2-in., 3000-lb B16.11 elbow. Elbow and pipe material of carbon steel; S_m = 20,000 psi. Pipe is sched 80.

Nominal stress range, M_i/Z (psi)	Girth fillet weld[a]			2-in., 3000-lb elbow[c]			Design cycles[d]	
	S_n (psi)	K_e[b]	S_{alt} (psi)	S_n (psi)	K_e[b]	S_{alt} (psi)	Fillet weld	2-in., 3000-lb elbow
10,000	21,000	1.0	21,000	35,700	1.0	17,850	80,000	150,000
15,000	31,500	1.0	31,500	53,550	1.0	26,775	18,000	30,000
20,000	42,000	1.0	42,000	71,400	1.38	49,256	7,000	4,500
25,000	52,500	1.0	52,500	89,250	1.975	88,134	3,800	900
30,000	63,000	1.1	69,300	107,100	2.57	137,623	1,600	260
60,000	126,000	3.2	277,200	214,200	5.0	535,000	45	12

[a]Girth fillet weld: $S_n = 2.1\ M_i/Z$, $S_p = 4.2\ M_i/Z$, and $S_{alt} = K_e S_p/2$.

[b]K_e for carbon steel = $1.0 + 2[(S_n/60{,}000) - 1]$ but not less than 1.0 nor more than 5.0.

[c]Two-inch, 3000-lb elbow: $S_n = 3.57\ M_i/Z$, $S_p = 3.57\ M_i/Z$, and $S_{alt} = K_e S_p/2$.

[d]Design cycles obtained from Code Figure I-9.1; ultimate tensile strength ≤ 80,000 psi.

but since $G \leq 1$,

$$(K_e)_c = 1.0 \quad (A \leq 3) , \tag{14c}$$

$$(S_p)_c = 4.5\ AGS_m , \tag{14d}$$

and

$$(S_{alt})_c = 2.25\ AGS_m . \tag{14e}$$

For socket-welding tees and elbows,

$$(S_n)_f = C_{2f}AGS_m \quad (A \leq 3) , \tag{15a}$$

$$(K_e)_f = 1.0 \quad (C_{2f}AG \leq 3) , \tag{15b}$$

$$(K_e)_f = 1.0 + 2\left(\frac{C_{2f}AG}{3} - 1.0\right) \quad (3 \leq C_{2f}AG \leq 9) , \tag{15c}$$

$$(K_e)_f = 5 \quad (C_{2f}AG \geq 9) , \tag{15d}$$

$$(S_p)_f = C_{2f}AGS_m , \tag{15e}$$

and

$$(S_{alt})_f = 1/2(K_e)_f C_{2f}AGS_m . \tag{15f}$$

For a socket-welding coupling, it follows from Eqs. (7) and (14) that if

$$G \leq 2.1/2.25 \leq 0.933 \text{ for } A \leq 1.429 , \tag{16a}$$

or

$$G \leq (2.1/2.25)(1.4A - 1) \text{ for } 1.429 \leq A \leq 3 , \tag{16b}$$

S_{alt} for the fillet weld [Eq. (7e)] will be larger than S_{alt} for the coupling [Eq. (14e)], and the weld will fail before the coupling. Further, the values for Z given earlier in Table 3 indicate that for pipe sizes greater than 1/4 in., G will always be less than 0.933 when a heavier class coupling is used.

For socket-welding tees and elbows that are heavier than the nominal size of the joining pipe, the critical value for the stress index C_{2f} is given by the following three equations:

$$C_{2fc} = 4.2/G \qquad (A \leq 0.714) \ , \tag{17a}$$

$$C_{2fc} = \frac{1}{4AG}(3 + \sqrt{100.8A + 9}) \qquad (0.714 \leq A \leq 1.429) \ , \tag{17b}$$

and

$$C_{2fc} = \frac{1}{4AG}(3 + \sqrt{141.12A^2 - 100.8A + 9}) \qquad (1.429 \leq A \leq 3) \ . \tag{17c}$$

It is rather interesting to note that, for this case, C_{2fc} is proportional to the curve shown in Fig. 14 for the previous case differing by the factor 1/G. Thus, if a 2-in.-diam, 6000-lb-class elbow (for which $C_{2f} = 2.54$) is used in a sched-80 pipeline ($G = Z_p/Z_f = 0.731/0.979 = 0.747$), Eqs. (17) indicate that the fillet weld will always fail before the fitting since the minimum value of C_{2fc} is $2.69/G = 3.60$. The design would then be governed by the allowable number of fatigue cycles for the fillet weld given previously in Table 11.

In general, when fittings of a heavier class than the mating pipe are used and G is less than about 0.9, S_{alt} for the weld will always be greater than S_{alt} for the fitting. This conclusion applies to all materials, values of nominal stress, and values of S_m.

7. STRESS INDICES FOR THERMAL LOADINGS

Thermal-gradient loadings, as well as internal pressure and bending moments, are included in the analysis procedures given in Paragraph NB-3650 of the Code. Specifically, six of the terms in Code Eqs. (10), (11), and (13), listed earlier in Table 1, involve thermal gradients ΔT_1, ΔT_2, and $(\alpha_a T_a - \alpha_b T_b)$, as well as the stress indices C_3, K_3, and C_3'. To obtain reasonable index values for socket-welding fittings, we again note the geometric similarity between socket-welding fittings and butt-welding components and base the proposed values on those existing in the Code for the butt-welding components.

The term ΔT_1 is defined* as the linear temperature difference between the inside and outside surfaces; ΔT_2 is the maximum value of the nonlinear

*Paragraphs NB-3653.1 and NB-3653.2.

portion of the temperature variation through the wall thickness; and $(\alpha_a T_a - \alpha_b T_b)$ is the difference in thermal expansion across a "gross discontinuity." The secondary thermal stress indices C_3 and C_3' are associated with $(\alpha_a T_a - \alpha_b T_b)$ in Code Eqs. (10), (11), and (13), respectively. The peak-thermal-stress index K_3 is associated with both ΔT_1 and $(\alpha_a T_a - \alpha_b T_b)$ in Code Eq. (11). There are no stress indices associated with ΔT_2, although it is "implied" that a stress index equal to 1.0 precedes the term $[1/(1 - \nu)]E\alpha|\Delta T_2|$ in Code Eq. (11).

The only well-defined "discontinuities" in the body of a socket-welding fitting are at the base of the sockets. There are at least two of these, and although it might be possible in some applications to determine an average temperature difference $(T_a - T_b)$ between the body and the sockets,* the resulting calculated stress would be of doubtful significance in evaluating the adequacy of the design. It is therefore recommended that $C_3 = C_3' = 0.0$ be used for socket-welding fittings. It should be noted, however, that we are <u>not</u> recommending that the indices $C_3 = 1.8$ and $C_3' = 1.0$ for the fillet welds joining the fittings to the pipe be changed. It is quite possible that significant thermal stresses could be developed in the fillet welds during thermal transients; thus the thermal-stress terms are needed for a proper evaluation of the design.

The peak-thermal-stress index K_3 is used to evaluate thermal bending stresses through the wall thickness, as, for example, through the section A-A′ of the socket-welding elbow shown in Fig. 15. In the Code, K_3 is given as 1.0 for straight pipe, butt-welding tees, and butt-welding elbows. For reasons of geometric similarity, $K_3 = 1.0$ is also considered appropriate for the socket-welding fittings treated in this report. In a similar manner, the term involving ΔT_2 in Code Eq. (11) {i.e., $[1/(1 - \nu)]E\alpha|\Delta T_2|$} along with its "implied" stress index of 1.0 contribute to the thermal stresses in a socket-welding fitting in the same way as for butt-welding components. It is thus appropriate to retain this term as it is in the evaluation of Code Eq. (11) for socket-welding fittings.

---

*Note that in this case $\alpha_a = \alpha_b$.

ORNL-DWG 72-13663

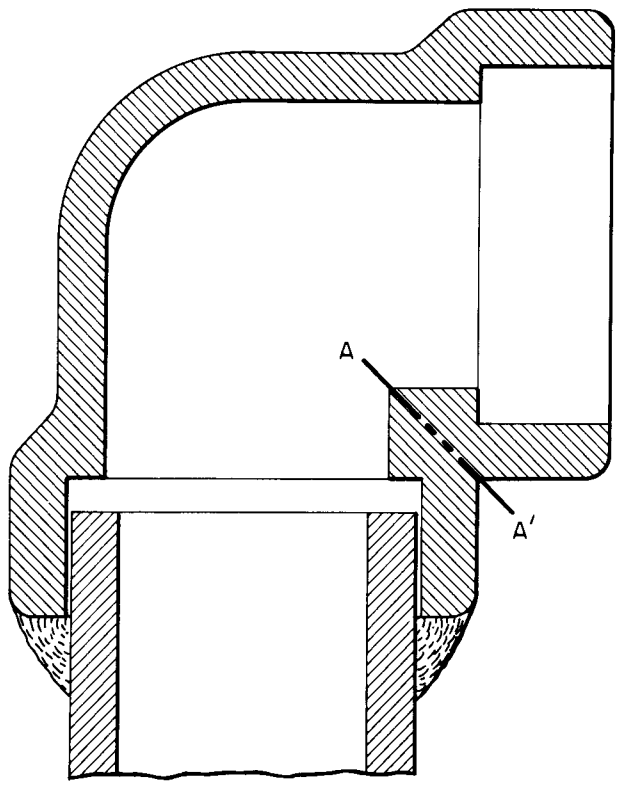

Fig. 15. B16.11 socket-welding 90° elbow showing section AA′, the probable critical section for evaluation of ΔT_1 and ΔT_2 of such a fitting body.

In summary, for thermal-gradient loadings on ANSI B16.11 socket-welding fittings, our recommendations are to set $C_3 = C_3' = 0.0$ and $K_3 = 1.0$ and to retain the term $[1/(1 - \nu)]E\alpha|\Delta T_2|$ in Code Eq. (11) as it presently stands.

8. SUMMARY AND RECOMMENDATIONS

Stress indices for socket-welding tees, elbows, and couplings that meet the fabrication requirements of the ANSI B16.11 standard[2] are presented in this report for use with the design-stress-analysis rules of NB-3600, Section III of the ASME Boiler and Pressure Vessel Code.[1] At present, the Code permits the use of socket-welding fittings of 2-in. nominal size and smaller in both Class-1 and Class-2 piping systems and provides stress indices (Class 1) and stress intensification factors (Class 2) for the fillet welds joining the fittings to the pipe. The Code does not, however, provide either stress indices or stress-intensity factors for the body of the fitting itself. In order to comply with a strict interpretation of the Code rules for Class-1 piping, it would therefore be necessary to perform a theoretical or an experimental stress analysis of the fitting and to include the analysis in the stress report [see NB-3681(d)].

For Class-2 piping (subarticle NC) the Code fails to give instructions for the analysis of components not specifically covered by subparagraph "NC-3673 – Analysis." Since stress-intensification factors for socket-welding fittings are not presently included, it might reasonably be inferred that an analysis is not considered necessary. The authors of this report, however, feel that not including such instructions may have been an oversight and that the Code should, as a minimum, give an indication of intent. We therefore recommend that this point be clarified. If it should be considered appropriate, the stress indices given here for socket-welding fittings in Class-1 piping could easily be modified for Class-2 piping and included in the Code or in a special Code Case.

Part of the reason for not including stress indices for socket-welding fittings in the Code is that there is, essentially, no specific information in the literature for developing such indices. To fully overcome this difficulty, it would be necessary to develop reasonable analytical models, to conduct stress-analysis parameter studies for the different types of fittings and loadings, and to perform at least a few carefully instrumented tests. Fatigue-test data for both cyclic pressure and cyclic moment loadings would be especially useful. Next in importance would be photoelastic or strain-gage data on the stress concentrations at the bottom of the sockets.

Since data of this type were not available, the stress indices presented here are based on engineering judgment and combinations of the following factors: the dimensional and burst-pressure requirements of the ANSI B16.11 standard; the standard pressure-temperature ratings of the fittings; their apparent shapes, as indicated from a small random sampling of off-the-shelf fittings; and analogies with similar butt-welding fittings that are presently covered by NB-3600. As a general rule, we propose to restrict the use of the new indices to socket-welding fittings for which the final exterior contour is forged to shape. Hopefully, this requirement will tend to eliminate the use of fittings with sharp external surface transitions, where fatigue cracks are likely to develop.

The proposed B_1 stress index for primary pressure stresses is based on the burst-pressure requirements of the ANSI B16.11 standard and on the Code requirement (NB-3649) that piping products considered for use in Class-1 systems meet these requirements. The proposed B_2 stress index is associated with the C_2 index in the same manner as is currently done for butt-welding components. The indices C_1 and K_1 for primary-plus-secondary stresses and for cyclic pressure loading, respectively, are based on a fatigue analysis of a hypothetical piping system and on a set of operating service conditions that appears to be conservative with respect to industrial practice. The indices C_2 and K_2 for moment loadings are based on existing stress indices for geometrically similar butt-welding components. The indices C_3 and C_3' for secondary thermal stresses are proposed to be set equal to zero because of the doubtful significance of and the difficulties with their use in this particular application. Cyclic thermal

stresses associated with K_3 may, however, be significant, and thus a value of $K_3 = 1.0$ is proposed. All of the proposed stress indices for socket-welding fittings are summarized in Table 12, along with comparable stress indices for the girth fillet welds that join the fittings to the pipe.

An examination of Table 12 shows that several of the proposed stress indices are larger than the existing indices for the girth fillet welds. In most cases this reflects our concern over the lack of more definitive information, although the values are compatible with available information, including some unpublished pressure-burst data[4] and some field-failure-report data cited in Appendix B. The major impact of the proposed indices may be to require a somewhat more conservative design on socket-welding tees and elbows, although for most cases involving moment loadings the stress indices for the fillet welds will continue to govern the design. In those cases where the proposed indices would govern the design, a potentially simple and inexpensive solution is to use the next-heavier-class fitting.

The stress indices for both girth fillet welds and B16.11 fittings are believed to be quite conservative. On a relative basis, the indices for B16.11 fittings are probably more conservative than those for girth fillet welds. However, until such time as fatigue-test data or other pertinent data become available on B16.11 fittings, the conservative indices developed herein should be used.

It is our recommendation that the stress indices presented herein for socket-welding tees, elbows, and couplings be introduced first as a Code Case for the reasons given above. Proposed wording for the Code Case is given in Appendix A. This will give the technical community a chance to use and comment on the information without the mandatory requirements of a Code revision. It may also provide further incentive for development of the engineering data needed to verify the adequacy or to reduce the conservatism of these indices.

After a reasonable length of time, it will be desirable to incorporate stress indices and stress-intensification factors for socket-welding fittings into the Code as revisions. Before this is done, however, we recommend that paragraph NB-3680, "Stress Indices and Flexibility Factors," be edited and rewritten to simplify the stress-index presentation now

Table 12. Summary of proposed stress indices for ANSI B16.11 socket-welding fittings[a] and stress indices for girth fillet welds for comparison

Component	Internal pressure			Moment loading			Thermal loading		
	B_1	C_1	K_1	B_2	C_2	K_2	C_3	C_3'	K_3
Socket-welding fittings[a]									
Tees[b]	1.0	2.0	4.5	(c)	(c)	1.0	0.0	0.0	1.0
90 and 45° elbows	1.0	2.0	4.5	(d)	(d)	1.0	0.0	0.0	1.0
Couplings	0.5	1.0	4.5	1.0	1.0	4.5	0.0	0.0	1.0
Girth fillet welds to socket-welding fittings	0.75	2.0	3.0	1.5	2.1	2.0	1.8	1.0	3.0

[a]Socket-welding fitting made in accordance with ANSI B16.11 in nominal sizes of 2 in. and smaller. Applicable only if exterior contour of fitting is forged to shape and if the pressure class of the fitting is rated equal to or greater than the allowable design pressure of the attached pipe.

[b]For socket-welding tees, M_i in Code Eqs. (9) to (13) must be replaced with $M_i = M_r + M_b$, where M_r and M_b are calculated according to the rules in Footnote 5, Table NB-3683.2-1.

[c]$B_2 = 0.75C_2$ and $C_2 = (r/t)^{2/3}$, where r = mean radius and t = nominal wall thickness of equivalent pipe.

[d]$B_2 = 0.75C_2$ and $C_2 = 1.23\ (r/t)^{2/3}$, where r = mean radius and t = nominal wall thickness of equivalent pipe.

given in Table NB-3683.2-1. The present format, including the table and its footnotes, is already quite complicated. If the table were simply expanded to include stress indices for other components, it would become increasingly difficult to interpret and use correctly. It may, for example, be desirable to write new subparagraphs under NB-3683 for the different types of piping products.

In conducting this study, we also noted the need for several minor changes in the Code for clarification of intent. We therefore recommend the following editorial revisions.

1. As presently written, the first sentence of subparagraph NB-3661.2(b) is misleading in that the ANSI B16.11 standard does not give requirements for the fillet welds that join the fitting to the pipe. In addition, the other requirements are already included in the rules for fabrication and installation, Article NB-4000. We therefore propose to replace the present wording:

> "(b) Socket welded piping joints shall conform to the requirements specified in ANSI B16.11, the applicable standards listed in Table NB-3691.1, and shown in Fig. NB-4427.1. A gap of approximately 1/16 in. shall be provided between the end of the pipe and the bottom of the socket before welding"

with the following:

> "(b) Socket-welded piping joints shall be made in accordance with the applicable provisions of NB-4400."

2. The reference given in subparagraph NB-3661.1 is in error, and we propose to change the present:

> "NB-3661.1 General Requirements. Welded joints shall be made in accordance with NB-4200"

to the following:

> "NB-3661.1 General Requirements. Welded joints shall be made in accordance with NB-4400."

3. The 1966 edition of ANSI B16.11 listed in Table NB-3691.1, "Dimensional Standards," is out of date by the revisions included in the 1973 edition of the standard. For example, the revised standard establishes the pressure-temperature ratings for socket-welding fittings as equivalent to the ratings for straight seamless pipe under the rules of the appropriate

code. This provision of ANSI B16.11-1973 will eliminate the problems discussed in Chaps. 4 and 5 of the present report. Note also that the 1973 edition increases the required burst pressure and clarifies several other points as well. This item has been discussed with the ASME Code Committee, as well as other revisions to Table NB-3691.1 considered appropriate. We understand that the table has been revised and updated, and that a Code revision will be issued.

9. ACKNOWLEDGMENTS

The authors wish to thank the members of Task Group 1 of the Pressure Vessel Research Committee, Subcommittee on Piping, Pumps, and Valves, and the members of the ASME Boiler and Pressure Vessel Code Committee, Subgroup on Piping (SGD)(SC-III), for their review and valuable suggestions. They also wish to acknowledge the extensive editorial contributions of F. M. O'Hara, Jr., in preparation of this report. Material given in Table 2 was abstracted from ref. 3 with permission of the publishers, the American Society of Mechanical Engineers.

10. REFERENCES

1. ASME Boiler and Pressure Vessel Code, Section III, Division 1–1974 Edition, Nuclear Power Plant Components, American Society of Mechanical Engineers, New York, 1974.

2. ASA B16.11–1966, Forged Steel Fittings, Socket-Welding and Threaded, American Society of Mechanical Engineers, New York, 1966.

3. ANSI B16.11–1973, Forged Steel Fittings, Socket-Welding and Threaded, American Society of Mechanical Engineers, New York, 1973.

4. Private communication, D. K. Greenwald, Ladish Co., Cudahy, WI, Apr. 28, 1967.

5. ANSI B36.10–1970, Wrought Steel and Wrought-Iron Pipe, American Society of Mechanical Engineers, New York, 1970.

6. Piping Engineering, pp. 13-24, Tube-Turns Division of Chemetron Corp., Louisville, KY, 1969.

7. ASTM A 182-72, "Standard Specification for Forged or Rolled Alloy-Steel Pipe Flanges, Forged Fittings, and Valves and Parts for High-Temperature Service," pp. 89-95 in 1974 Annual Book of ASTM Standards, Part 1, American Society for Testing and Materials, Philadelphia, PA, 1974.

8. ASTM A 105-71, "Standard Specification for Forgings, Carbon Steel, for Piping Components," pp. 20-24 in 1974 Annual Book of ASTM Standards, Part 1, American Society for Testing and Materials, Philadelphia, PA, 1974.

9. ASA B16.5–1961, Steel Pipe Flanges and Flanged Fittings, American Society of Mechanical Engineers, New York, 1961.

10. E. C. Rodabaugh and S. E. Moore, Stress Indices for Girth-Welded Pipe Joints Including the Effects of Radial Weld Shrinkage, Mismatch, and Tapered Wall Transitions, ORNL-TM-3643 (to be published).

11. ANSI B16.28–1964 (rev. 1972), Wrought Steel Buttwelding Short Radius Elbows and Returns, American Society of Mechanical Engineers, New York, 1972.

APPENDIX A

PROPOSED CODE CASE ON STRESS INDICES FOR SOCKET-WELDING FITTINGS

Inquiry

What stress indices may be used in NB-3650 of Section III for forged-steel, socket-welding elbows, tees, and couplings that meet the requirements of ANSI-B16.11-1973?

Reply

It is the opinion of the committee that the stress indices listed in Table A.1 may be used within the limitations given in Footnote a of the table. Evaluation of socket-welding fittings in accordance with NB-3650 shall include separate evaluation of (1) the body of the fitting, using the stress indices given in Table 1, and (2) the girth fillet welds between the pipe and fitting, using the stress indices given in Table NB-3683.2-1 for girth fillet welds.

Table A.1. Proposed Code Case "Table 1. Stress Indices for ANSI B16.11 Socket-Welding Fittings"

Component	Internal pressure			Moment loading			Thermal loading		
	B_1	C_1	K_1	B_2	C_2	K_2	C_3	C_3'	K_3
Socket-welding fittings[a]									
Tees[b]	1.0	2.0	4.5	(c)	(c)	1.0	0.0	0.0	1.0
90 and 45° elbows	1.0	2.0	4.5	(d)	(d)	1.0	0.0	0.0	1.0
Couplings	0.5	1.0	4.5	1.0	1.0	4.5	0.0	0.0	1.0

[a]Socket-welding fitting made in accordance with ANSI B16.11 in nominal sizes of 2 in. and smaller. Applicable only if exterior contour of fitting is forged to shape and if the pressure class of the fitting is rated equal to or greater than the allowable design pressure of the attached pipe.

[b]For socket-welding tees, M_i in Code Eqs. (9) to (13) must be replaced with $M_i = M_r + M_b$, where M_r and M_b are calculated according to the rules in Footnote 5, Table NB-3683.2-1.

[c]$B_2 = 0.75C_2$ and $C_2 = (r/t)^{2/3}$, where r = mean radius, t = nominal wall thickness of equivalent pipe.

[d]$B_2 = 0.75C_2$ and $C_2 = 1.23\ (r/t)^{2/3}$, where r = mean radius, t = nominal wall thickness of equivalent pipe.

APPENDIX B

SURVEY OF FAILURES ASSOCIATED WITH SOCKET AND FILLET WELDS IN NUCLEAR-POWER-PLANT PIPING SYSTEMS

The failure experience of socket-welded fittings in nuclear-power-plant service was investigated by searching the file (as of Feb. 1974) of the Nuclear Safety Information Center. The entire file was searched using first the key words "Failure, pipe" and then the combination of the key words "Failure" and "Welds." The items of interest turned up by the second search were a subset of those found in the first search.

Nine cases of failures were found, one of which involved seven different failures. These nine cases are listed in Table B.1. None of the cases are described in sufficient detail to ascertain the exact location of the failure. Also, none of the cases specifically identify the fitting involved as being an ANSI B16.11 fitting.

Of the 16 or 17 failures covered by Table B.1, all but one apparently was associated with a fillet weld (or pipe thread,* Case 9) between a component body and the attached pipe. As remarked in the text of this report, this is the region where failures would normally be expected to occur. Stress indices for the socket-weld region were developed in ref. 10 and have been included in the NB Subsection of the Code.[1] The stress indices for the fillet welds in socket-welded joints are

$$B_1 = 0.75 \qquad B_2 = 1.5 \qquad C_3 = 1.8$$
$$C_1 = 2.0 \qquad C_2 = 2.1 \qquad C_3' = 1.0$$
$$K_1 = 3.0 \qquad K_2 = 2.0 \qquad K_3 = 3.0$$

Four of the cases (1, 2, 6, 7) indicate that the cause of failure was vibration. Vibration would cause a bending moment in the pipe, hence the C_2-index and C_2K_2-product are intended for use in the design for such loadings. Because the cases give no indication of the magnitude of pipe bending stresses caused by the vibration, or the number of cycles to failure, the adequacy of the C_2 and K_2 indices cannot be evaluated from the failure data.

---

*Pipe threaded connections without a seal weld are not permitted in Class-1 piping. No stress indices are given in NB-3600 for such joints, either with or without a seal weld.

Table B.1. Failure descriptions obtained from search of Nuclear Safety Information Center files as of Feb. 1974

Case No.	Plant and failure description
1	Indian Point 1 A crack developed in the weld of a socket-welded connection of the vent line to one of the primary coolant pumps. The failure was attributed to fatigue resulting from vibration of the vent line. Leakage of coolant resulted.
2	Palisades Point A weld in a socket-welded joint just upstream of a charging-pump shutoff valve cracked from vibrations induced by the positive-displacement pumps. Leakage occurred, and the failure was noted while the reactor was in the hot shutdown condition.
3	Palisades Point A leak in the recirculating water-pump-seal-cartridge controlled-leakoff line was found to be due to a cracked socket weld. The leakage of recirculated water was small, and the leak was discovered during shutdown inspection.
4	Nuclear Ship Savannah During a routine inspection while the reactor was in the cold-shutdown condition, a leak was found at a socket weld in 1-in. pipe in the buffer-seal charge-pump-gland leakoff piping. About 1 gal/min of radioactive coolant fluid leaked through the crack when the reactor was shut down and the system was cold.
5	Zion 1 A crack occurred 360° around a weld[a] between 3/4-in. pipe and an elbow on June 8, 1973. Both the pipe and the elbow were of type 304 stainless steel, and the pipe came from the discharge relief valve of the positive-displacement charging pumps. The leak caused the loss of 200 gal of borated water and resulted from vibration-induced fatigue. Fracture had propagated along a straight line with almost negligible microstructural deformation, indicating cyclic tensile stresses of a relatively low magnitude. No defects were found in the weld.
6	Zion 1 A circumferential crack in the weld of a 3/4-in. socket-welded 45° elbow in the upstream orifice tap for the charging-line flowmeter caused the shutdown of the reactor on Nov. 26, 1973, during operation at 68% power. The fatigue failure was due to the use of pipe with an improper wall thickness combined with vibration from the positive-displacement charging pump.

Table B.1 (continued)

Case No.	Plant and failure description
7	Indian Point 2 Leaks in the 3/4-in.-pipe-to-socket-weld branch connections of two vents in the RHR system were found during a routine inspection while the reactor was in the cold-shutdown condition. Excess vibration caused fatigue failure of the welds. The vent valves were removed, and the pipes were plugged.
8	Indian Point 2 A crack occurred in the fillet weld on the pipe side of the upstream orifice flange connection for the flow transmitter in the return line of the 6-in. RHR system. The 3/4-in. pipe was also cracked. A small leak resulted and was observed while the plant was in a cold-shutdown condition and the RHR system was in service at 400 psig. The affected components were replaced.
9	La Crosse During a test of the Emergency Core Spray System it was found that 10% of the system's design flow was leaking. Examination of the piping disclosed six cases of circumferential cracking of socket pipe nipples. All of these fittings' cracks initiated in the threads of the components.[b] Also, a longitudinal crack that was leaking was also found in the body of a socket-welded coupling.

[a]This may not have been a fillet weld.

[b]Presumably, the cracks were in the pipe.

The only failure directly relevant to this report is described by the last sentence of case 9: "Also, a longitudinal crack that was leaking was also found in the body of a socket-welded coupling." Because this case gives no indication of loading history, no evaluation of the failure is possible. Indeed, this particular coupling may have been defective and may have leaked during the initial hydrostatic test.

In summary, the survey indicates that failures at socket-welded joints are not uncommon. The one reported failure in the body of a socket-welded coupling suggests, however, that the body of B16.11 socket-welding fittings should not be ignored in considering possible failures of piping systems.

ORNL-TM-4929
UC-79, -79h, -79k

INTERNAL DISTRIBUTION

1. R. L. Battiste
2. M. Bender
3. J. J. Blass
4. S. E. Bolt
5. R. H. Bryan
6-7. J. W. Bryson
8. J. H. Butler
9. J. P. Callahan
10. C. J. Claffey
11. J. A. Clinard
12. C. W. Collins
13-14. J. M. Corum
15. W. B. Cottrell
16. J. S. Crowell
17. F. L. Culler
18. R. W. Derby
19. W. G. Dodge
20. G. G. Fee
21. M. H. Fontana
22. W. R. Gall
23. R. H. Gallagher (consultant)
24. M. J. Goglia
25-26. W. L. Greenstreet
27. R. C. Gwaltney
28. W. O. Harms
29. H. W. Hoffman
30. P. R. Kasten
31. K. C. Liu
32. R. N. Lyon
33. R. E. MacPherson
34. W. J. McAfee
35. W. J. McCarthy, Jr.
36. H. C. McCurdy
37. J. G. Merkle
38-52. S. E. Moore
53. F. M. O'Hara (consultant)
54. T. W. Pickel
55. H. Postma
56. C. E. Pugh
57. M. Richardson
58. D. N. Robinson
59. R. A. Schmidt
60. M. R. Sheldon
61. J. E. Smith
62. I. Spiewak
63. W. C. T. Stoddart
64. J. J. Taylor
65. D. B. Trauger
66. G. D. Whitman
67. W. J. Wilcox
68. G. T. Yahr
69. ORNL Patent Office
70-71. Central Research Library
72. Document Reference Section
73-78. Laboratory Records Department
79. Laboratory Records, ORNL RC

Subcontractors

80. W. F. Swinson, Auburn University, Auburn, AL 36830
81-90. E. C. Rodabaugh, Battelle-Columbus Laboratories, Columbus, OH 43201
91. J. K. Hayes, Combustion Engineering, Chattanooga, TN 37401
92. R. L. Maxwell, University of Tennessee, Knoxville, TN 37916

EXTERNAL DISTRIBUTION

93-94. Director, Division of Reactor Research and Development, ERDA, Washington, DC 20545

95-96. Director, Office of Nuclear Regulatory Research, NRC, Washington, DC 20555

97. Director, Reactor Division, ERDA, ORO

98. Research and Technical Support Division, ERDA, ORO, Oak Ridge, TN 37830

99-175. Nozzle Analysis and Nuclear Design Criteria – Piping-Pumps-Valves Programs Distribution

176-449. Given distribution as shown in TID-4500 under categories UC-79, -79h, and -79k (25 copies – NTIS)