OAK RIDGE NATIONAL LABORATORY LIBRARY
3 4456 0024213 7

CENTRAL RESEARCH LIBRARY

ORNL-5064

Cy 1

An Electromagnetic Transducer for Generation and Detection of Both Longitudinal and Transverse Ultrasonic Waves

Katsuhiro Kawashima

OAK RIDGE NATIONAL LABORATORY
CENTRAL RESEARCH LIBRARY
DOCUMENT COLLECTION
LIBRARY LOAN COPY
DO NOT TRANSFER TO ANOTHER PERSON
If you wish someone else to see this document, send in name with document and the library will arrange a loan.

OAK RIDGE NATIONAL LABORATORY
OPERATED BY UNION CARBIDE CORPORATION • FOR THE U.S. ATOMIC ENERGY COMMISSION

Printed in the United States of America. Available from
National Technical Information Service
U.S. Department of Commerce
5285 Port Royal Road, Springfield, Virginia 22161
Price: Printed Copy $4.00; Microfiche $2.25

This report was prepared as an account of work sponsored by the United States Government. Neither the United States nor the Energy Research and Development Administration, nor any of their employees, nor any of their contractors, subcontractors, or their employees, makes any warranty, express or implied, or assumes any legal liability or responsibility for the accuracy, completeness or usefulness of any information, apparatus, product or process disclosed, or represents that its use would not infringe privately owned rights.

ORNL-5064
UC-25 — Materials

Contract No. W-7405-eng-26

METALS AND CERAMICS DIVISION

AN ELECTROMAGNETIC TRANSDUCER FOR GENERATION AND DETECTION OF BOTH LONGITUDINAL AND TRANSVERSE ULTRASONIC WAVES

Katsuhiro Kawashima

SEPTEMBER 1975

OAK RIDGE NATIONAL LABORATORY
Oak Ridge, Tennessee 37830
operated by
UNION CARBIDE CORPORATION
for the
U.S. ENERGY RESEARCH AND DEVELOPMENT ADMINISTRATION

OAK RIDGE NATIONAL LABORATORY LIBRARY
3 4456 0024213 7

CONTENTS

	Page
ABSTRACT	1
INTRODUCTION	1
THE PRINCIPLE OF THE TRANSDUCER	2
EXPERIMENTAL METHOD	4
EXPERIMENTAL RESULTS	7
CONSIDERATIONS ABOUT MODE CONVERSION	15
CONCLUSION	18
ACKNOWLEDGMENTS	18

AN ELECTROMAGNETIC TRANSDUCER FOR GENERATION AND DETECTION OF BOTH LONGITUDINAL AND TRANSVERSE ULTRASONIC WAVES

Katsuhiro Kawashima[1]

ABSTRACT

An electromagnetic ultrasonic transducer that generates and detects both longitudinal waves and radially polarized transverse waves was made and tested on aluminum, brass, copper, and mild steel. The transducer detected an artificial flaw in aluminum with a fairly good signal-to-noise ratio. It was also shown experimentally with the electromagnetic transducer that the mode conversion between a longitudinal wave and a radially polarized transverse wave occurs with a fairly good efficiency at the vertical reflection.

INTRODUCTION

The method of electromagnetic generation and detection of ultrasonic waves has recently been developed as a new method for applying ultrasound.[2-10] The ultrasonic wave is generated directly inside the metal by

---

[1]On temporary assignment from Nippon Steel Corporation, 2-6-3 Otemachi, Chiyodaku, Tokyo, Japan.

[2]E. R. Dobbs and J. D. Llewellyn, "Generation of Ultrasonic Waves Without Using a Transducer," *Non-Destr. Test. (Guilford, Engl.)* 4(1): 49–56 (February 1971).

[3]K. O. Legg and D. J. Meredith, "Flaw Detection in Metals Using Electromagnetic Sound Generation," *J. Phys. D* 3: L61–L63 (1970).

[4]E. R. Dobbs, "Electromagnetic Generation of Ultrasonic Waves in Metals," *J. Phys. Chem. Solids* 31: 1657–67 (1970).

[5]D. J. Meredith, R. J. Watts-Tobin, and E. R. Dobbs, "Electromagnetic Generation of Ultrasonic Waves in Metals," *J. Acoust. Soc. Amer.* 45(6): 1393–1401 (1969).

[6]A. G. Betjemann et al., "R. F. — Ultrasonic Wave Generation in Metals," *Phys. Lett. A* 25(10): 753–54 (1967).

[7]J. R. Houck et al., "Direct Electromagnetic Generation of Acoustic Waves," *Phys. Rev. Lett.* 19(5): 224–27 (1967).

[8]P. R. Larsen and K. Saermark, "Electromagnetic Excitation of Elastic Modes in Aluminum," *Phys. Lett. A* 26(7): 296–97 (1968).

[9]H. Wüstenberg, "Contactless Electrodynamic Ultrasonic Transducers and Their Application to Ultrasonic Inspection," pp. 37–48 in *Preprints 6. ICNT Vol. B, 1970,* Deutsche Gesellscaft für Zerstörungsfreie Prüfverfahren e.V., Berlin.

[10]R. Botsco, "The Eddy-Sonic Test Method," *Mater. Eval.* 26(2): 21–26 (February 1968).

the interaction of a magnetic field and eddy currents that are induced by an induction coil placed on the metal surface. Then an interaction of the ultrasonic wave with the magnetic field gives rise to eddy currents, which are detected by an induction coil. The technique is similar to eddy-current nondestructive testing, and the physical phenomenon for detecting flaws and measuring material properties is that of ultrasonic nondestructive testing. The main advantages of this technique are summarized as follows:

1. An ultrasonic wave can be generated without any contact between a transducer and a material being tested. This characteristic is useful for materials that are at high temperatures, are moving, have rough surfaces, or must be protected from contamination by water or oil used in conventional ultrasonic testing.

2. The technique can generate ultrasonic waves of several different modes. Various combinations of the directions of the magnetic field and eddy currents can generate different ultrasonic wave modes, some of which can never be generated by a conventional ultrasonic transducer.

We built a transducer that has a simple structure and can generate and detect both longitudinal and transverse waves and used it to test steel, aluminum, brass, and copper.

THE PRINCIPLE OF THE TRANSDUCER

One principle of operation of the transducer can be explained with the help of Fig. 1. If the eddy current, I, has only an azimuthal component, and if the static magnetic flux, B, has only a radial component, the exerted force, F, has only a vertical component.

ORNL-DWG 75-6945

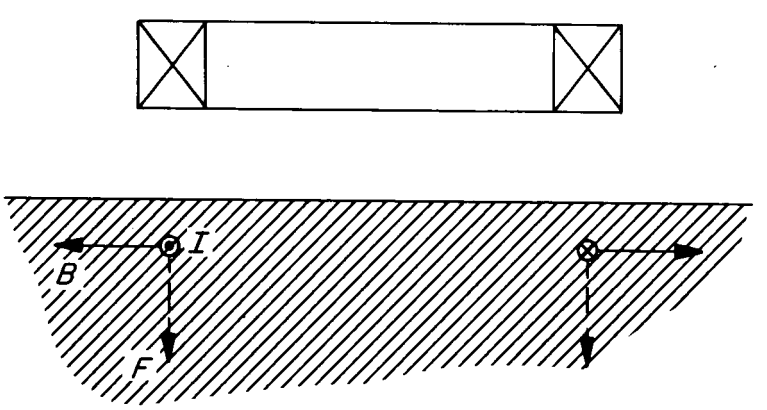

Fig. 1. Action of Transducer with Azimuthal Eddy Current I and Static Magnetic Flux B Having Only a Radial Component.

If the penetration depth of high-frequency eddy currents is much less than the ultrasonic wave length, the volume force exerted by the eddy current can be considered to be a surface force by integrating it over the depth. In this case, a longitudinal wave and a small amount of radially polarized transverse wave are generated.[11–14] If the static magnetic flux has only a vertical component (see Fig. 2), the force, F, has only a radial component. In this case, a radially polarized transverse wave and a small amount of longitudinal wave are generated.[11–14]

ORNL-DWG 75-6946

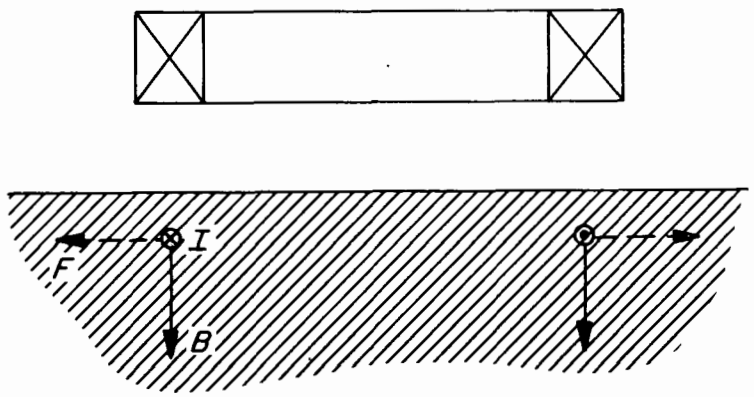

Fig. 2. Action of Transducer with a Static Magnetic Flux Having Only a Vertical Component.

If the static magnetic flux has both radial and vertical components, both longitudinal and transverse waves are generated. The amounts of both waves depend upon both radial and vertical components of the static magnetic field. (See Fig. 3.)

---

[11]Katsuhiro Kawashima, *An Electromagnetic Ultrasonic Transducer*, ORNL-5063 (in press).

[12]R. L. Roderick and R. Truell, "The Measurement of Ultrasonic Attenuation in Solids by the Pulse Technique and Some Results in Steel," *J. Appl. Phys.* 23(2): 267–79 (February 1952).

[13]F. Miller and H. Pursey, "The Field and Radiation Impedance of Mechanical Radiators on the Free Surface of a Semi-Infinite Isotropic Solid," *Proc. R. Soc. London Ser. A.*, 223: 521–41 (1954).

[14]Katsuhiro Kawashima, *The Theory and Numerical Calculation of the Acoustic Field Exerted by Eddy-Current Forces*, ORNL-5065 (in preparation).

ORNL-DWG 75-6947

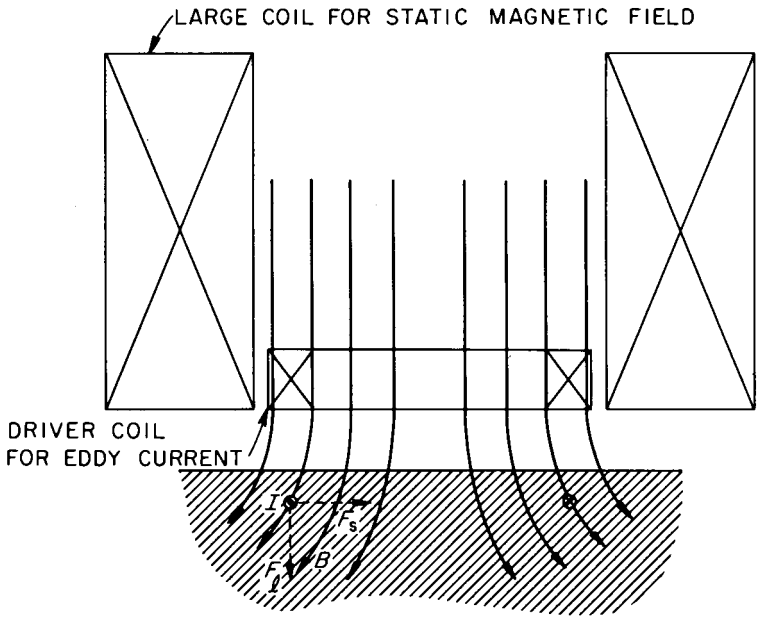

Fig. 3. Action of Transducer with Static Magnetic Flux Having Both Horizontal and Vertical Components.

An ultrasonic pulse is detected by a pickup coil through an exactly opposite phenomenon. This report presents an electromagnetic ultrasonic transducer that has a simple structure and can generate and detect a relatively large amount of a radially polarized transverse wave and a small amount of a longitudinal wave.

EXPERIMENTAL METHOD

The transducer consists of a large coil to generate the static magnetic field, a small driver coil to generate the eddy current, and a small pickup coil (see Fig. 4). The large coil has a steel pole piece in it to enhance the magnetic field. A direct current of 6 A runs through the big coil. The vertical component of magnetic flux near the steel pole piece varies from point to point between 5.8 and 3.5 kG, as shown in Fig. 5. The horizontal component is 4 kG. The outer radius of the driver coil is 9.8 mm, the inner radius is 3.6 mm, the thickness is 0.92 mm, including insulators, and the number of turns is 11. The pickup coil is located coaxially outside the driver coil. The outer radius is 12.5 mm, the inner radius is 9.8 mm, the thickness is 0.92 mm, including an insulator, and the number of turns is 200. The pickup coil is located outside the driver coil because (1) the peak intensity of the radially polarized transverse wave is off axis, and (2) the coupling efficiency between the coils and material is better when both coils are located very near to the material.

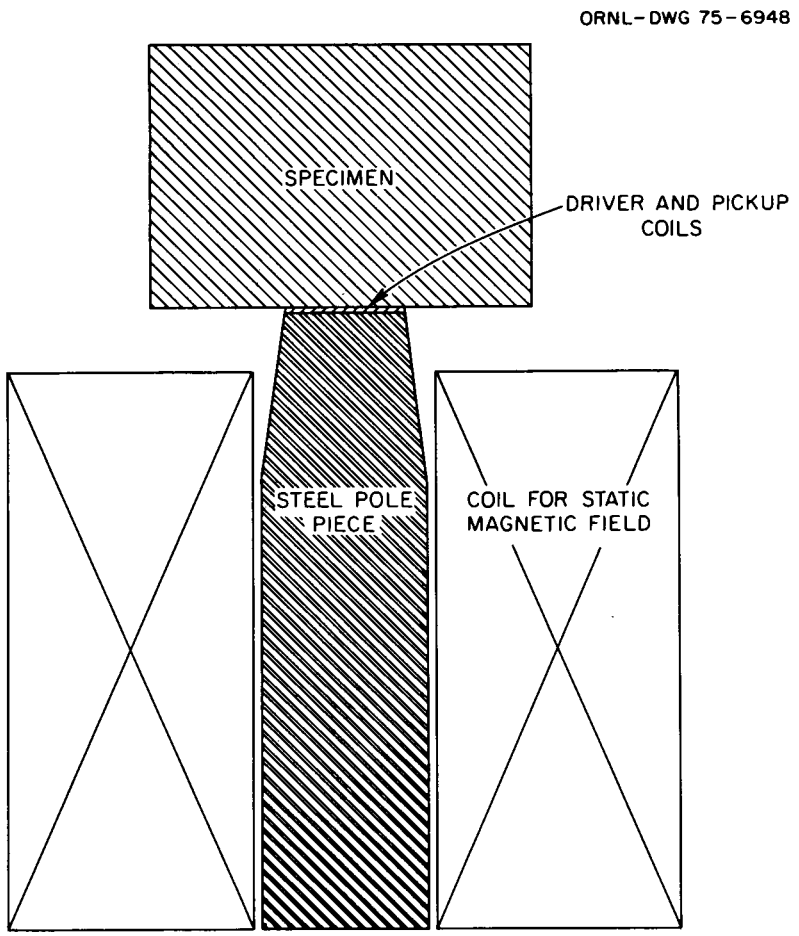

Fig. 4. Electromagnetic Ultrasonic Transducer.

A spark gap is used to make a single pulse of high current in the driver coil. A capacitor (9.75 nF) is charged by a dc power supply (17.5 kV) through a large resistance (25 mΩ). When a voltage breakdown occurs in the spark gap, a resonance circuit consisting of the capacitor, the driver coil, and a resistance (95 mΩ) is formed, and a large high-frequency current runs through the circuit. The current is estimated by measuring a voltage difference across the 95-mΩ resistance. The ultrasonic signal detected by the pickup coil is amplified 120 times and displayed on a cathode ray tube and photographed with a Polaroid camera. Figure 6 is a block diagram of the testing circuitry. The values of driver coil peak current and frequency for each of the materials tested are given in Table 1. All the samples were tested with the same transducer under the same conditions.

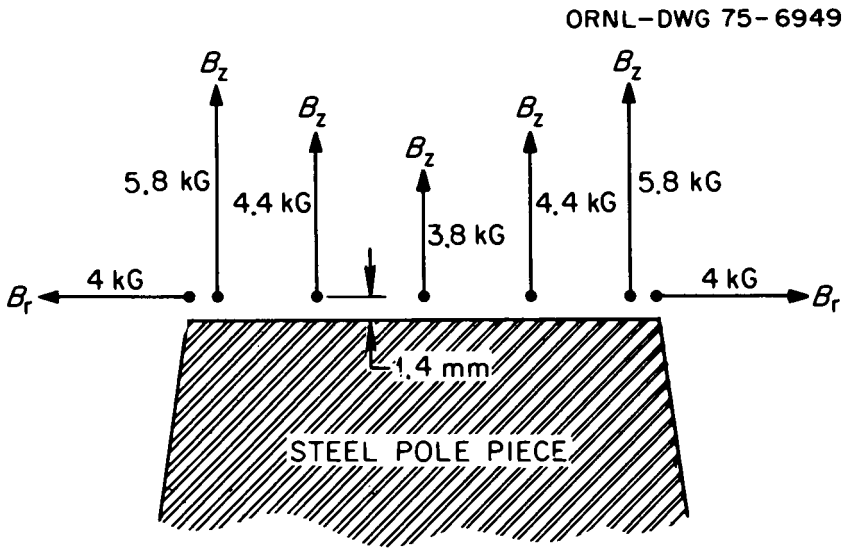

Fig. 5. Magnetic Flux in the Neighborhood of the Transducer.

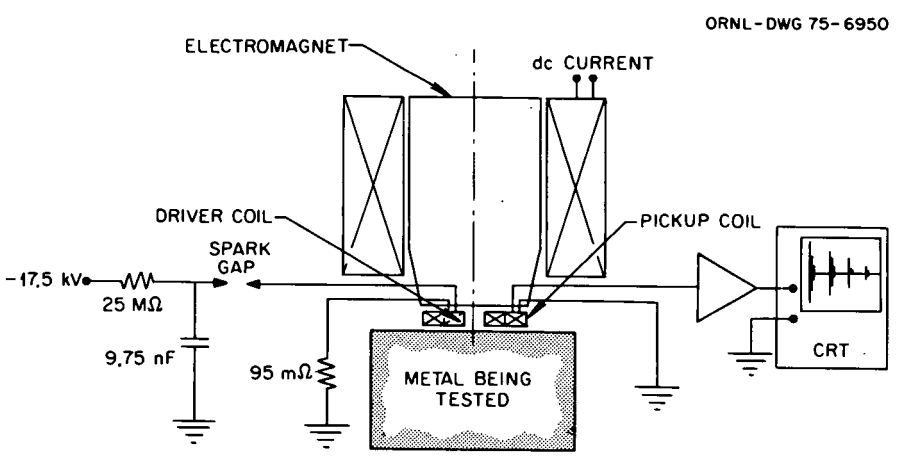

Fig. 6. Block Diagram of Circuitry.

Table 1. Samples and Driver Coil Current Characteristics

Sample	Thickness (mm)	Frequency (MHz)	Approximate Peak Current (A)
Aluminum[a]	76.7	1.33	2000
Brass	58.4	1.28	1900
Copper	37.7	1.30	1900
Steel	59.9	1.30	2300

[a]Two aluminum samples were tested; one had a 6.6-mm-diam flaw 46.3 mm deep.

EXPERIMENTAL RESULTS

The ultrasonic echoes for the aluminum specimen without a flaw are shown in Fig. 7. The paths for these echoes are represented by Fig. 8. All the echoes in Fig. 7 are explained by the following assumptions: (1) Both longitudinal and radially polarized transverse waves are generated and detected by the transducer. (2) Mode conversion between longitudinal and radially polarized transverse waves occurs at each reflection.

The first signal $B_{2\ell}$ consists of only a longitudinal wave and is detected at $t = 2t_\ell = 2L/C_\ell$ (C_ℓ is the longitudinal wave velocity and L is the sample thickness). The second signal $B_{\ell,t}$ consists of a radially polarized transverse wave that results from the mode conversion of the longitudinal wave at the far end of the sample, and also of a longitudinal wave that results from the mode conversion of the radially polarized transverse wave. Signal $B_{\ell,t}$ is detected at $t = t_\ell + t_t = t_t + t_\ell = L/C_\ell + L/C_t$ (C_t is the transverse wave velocity). Signals $B_{4\ell}$ and B_{2t} are detected at $t = 4_{t\ell}$ and $t = 2t_t$ respectively, making it difficult to resolve them into two independent echoes, because $4t_\ell$ is nearly equal to $2t_t$ in the case of aluminum. All the pulses of Figs. 9 through 12 for the other samples are explained similarly.

An echo that completes n round trips may be detected at $(2n + 1)$ different times as represented by Eq. (1), and may take 2^{2n} different combinations of paths:

$$\text{time} = n_\ell t_\ell + n_t t_t \ , \tag{1}$$

where $n_\ell + n_t = 2n$.

Examples for echoes that complete one or two round trips and some that complete three and four round trips are shown in Table 2. Table 2 shows that many echoes can exist, and the number increases rapidly with the increasing number of round trips. This is why many echoes appear at later times.

ORNL-DWG 75-6951

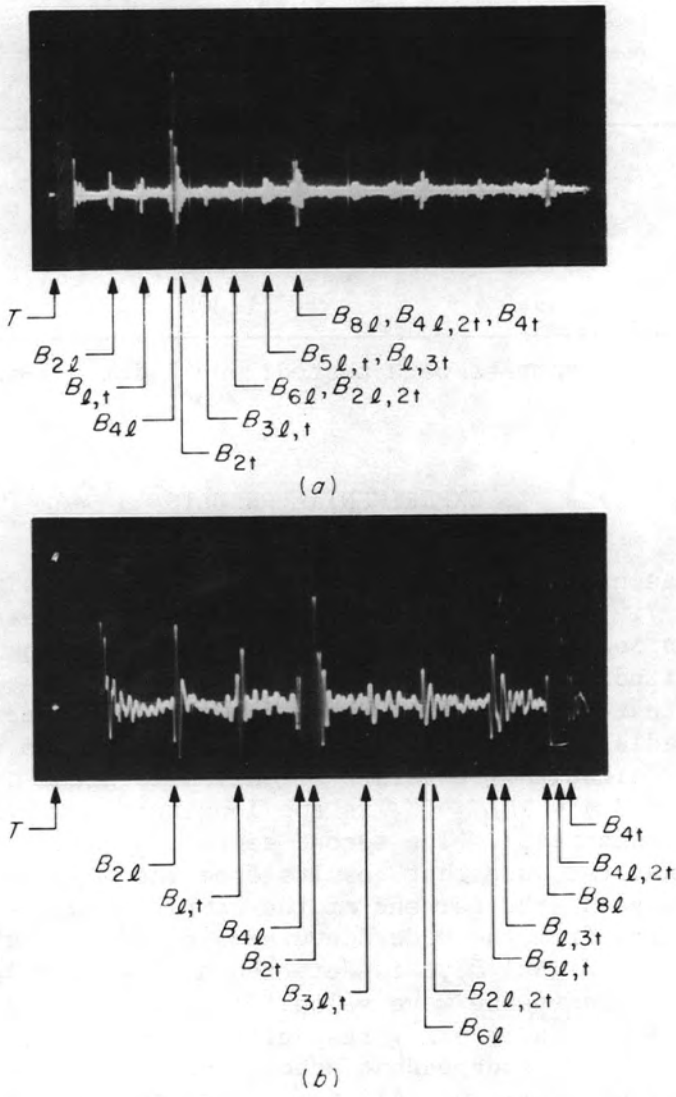

Fig. 7. Ultrasonic Pulse in 76.7-mm-thick Aluminum. (a) y axis 15.07 V/division; time base 21.1 μsec/division. (b) y axis 3.77 V/division; time base 10.4 μsec/division.

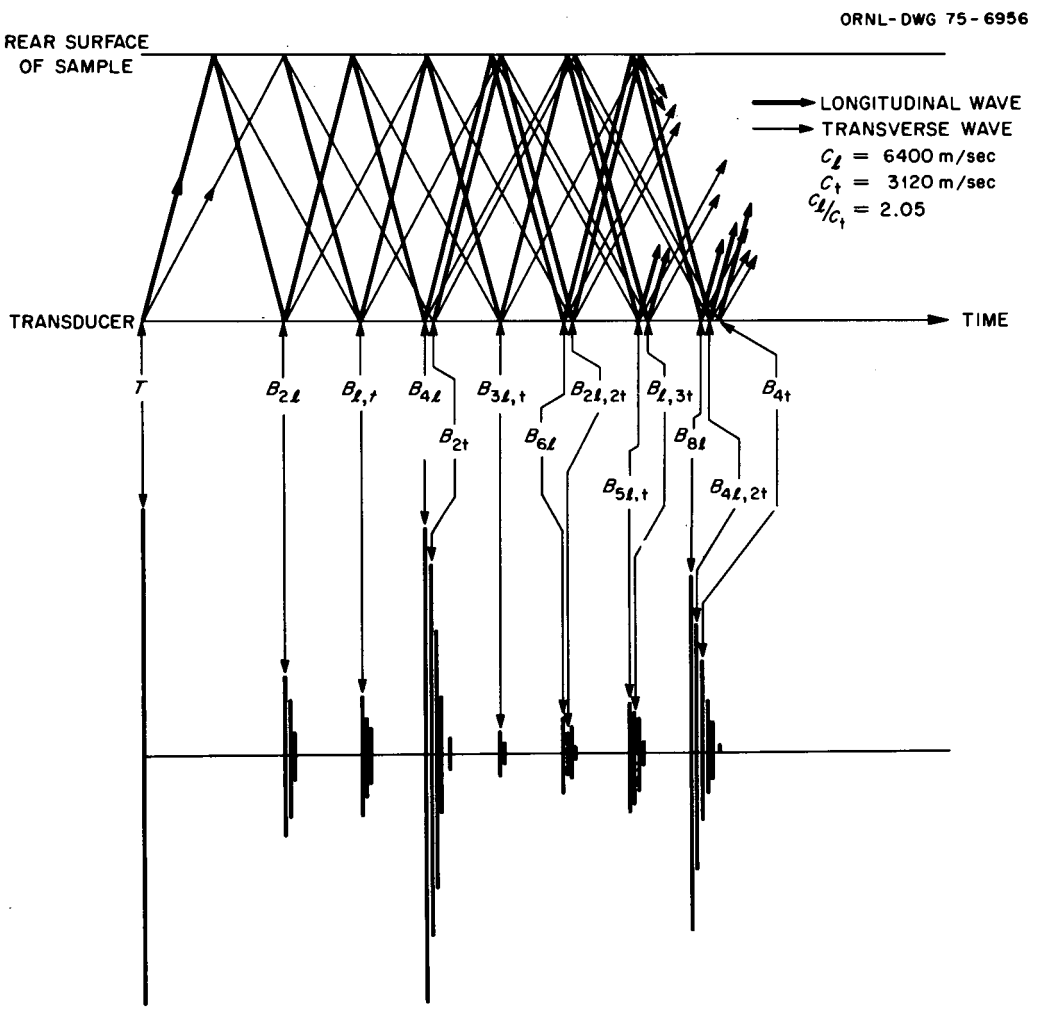

Fig. 8. Time Table for Echoes in Unflawed Aluminum.

ORNL-DWG 75-6952

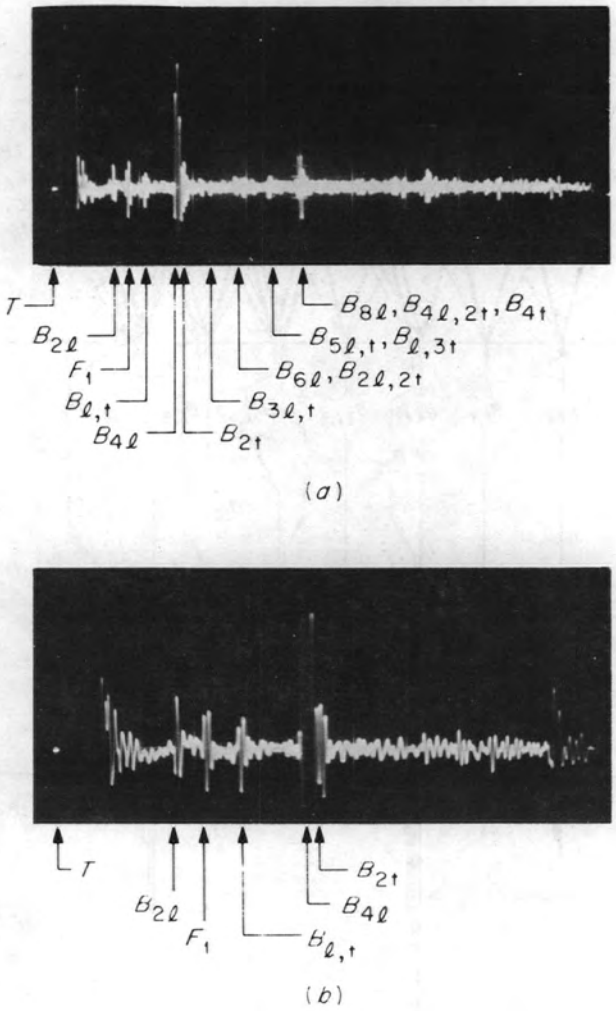

Fig. 9. Ultrasonic Pulse in 76-mm-thick Aluminum with a 6.6-mm-diam Flaw 46.3 mm deep. (a) y axis 7.53 V/division; time base 21.1 μsec/division. (b) y axis 3.77 V/division; time base 10.4 μsec/division.

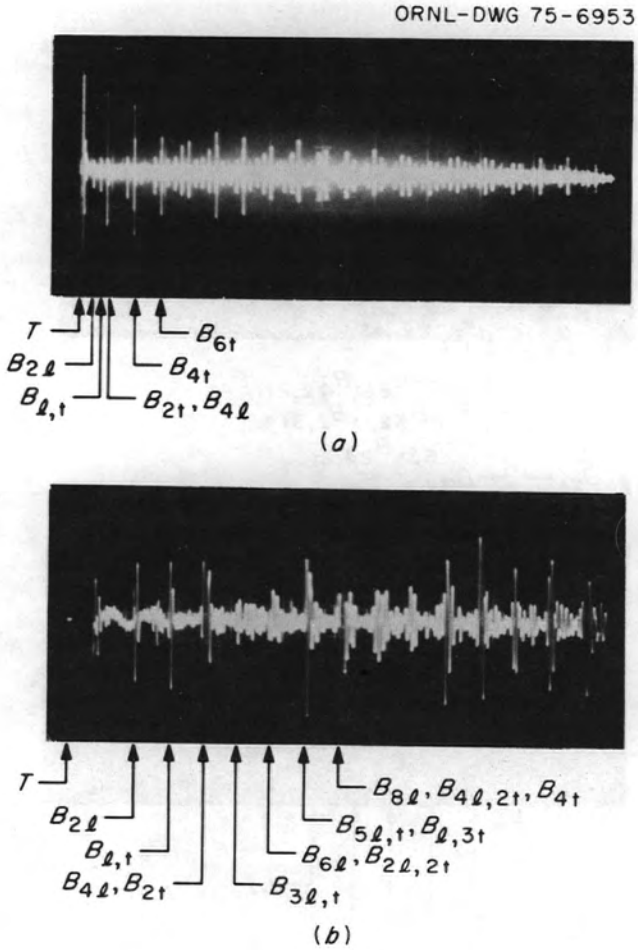

Fig. 10. Ultrasonic Pulse in 58.4-mm-thick Brass. (a) y axis 15.07 V/division; time base 105 μsec/division. (b) y axis 3.77 V/division; time base 21.1 μsec/division.

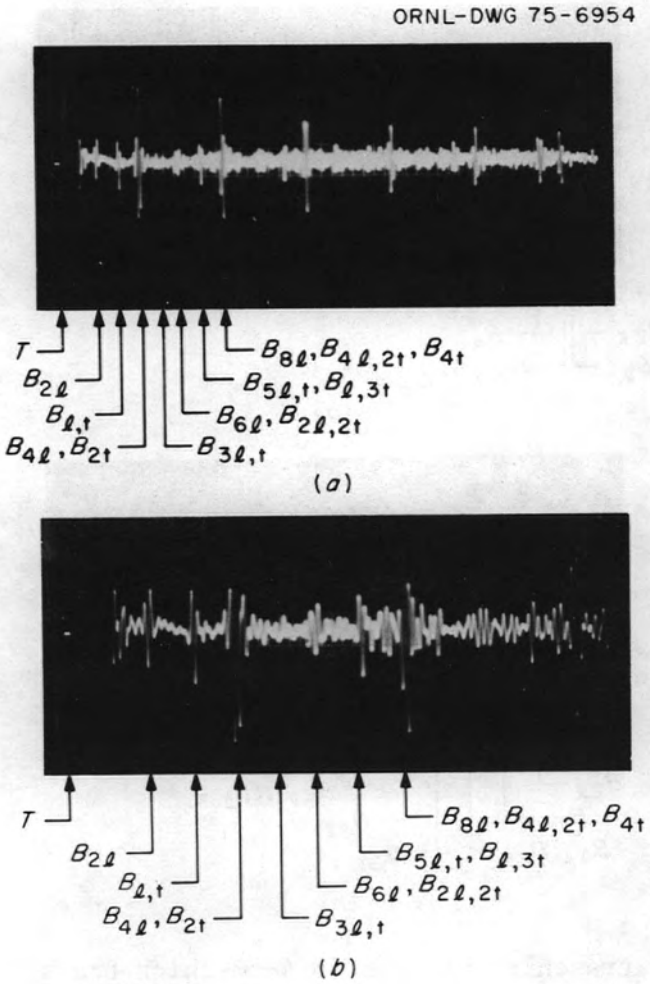

Fig. 11. Ultrasonic Pulse in 37.7-mm-thick Copper. (a) y axis 15.07 V/division; time base 21.1 μsec/division. (b) y axis 7.53 V/division; time base 10.4 μsec/division.

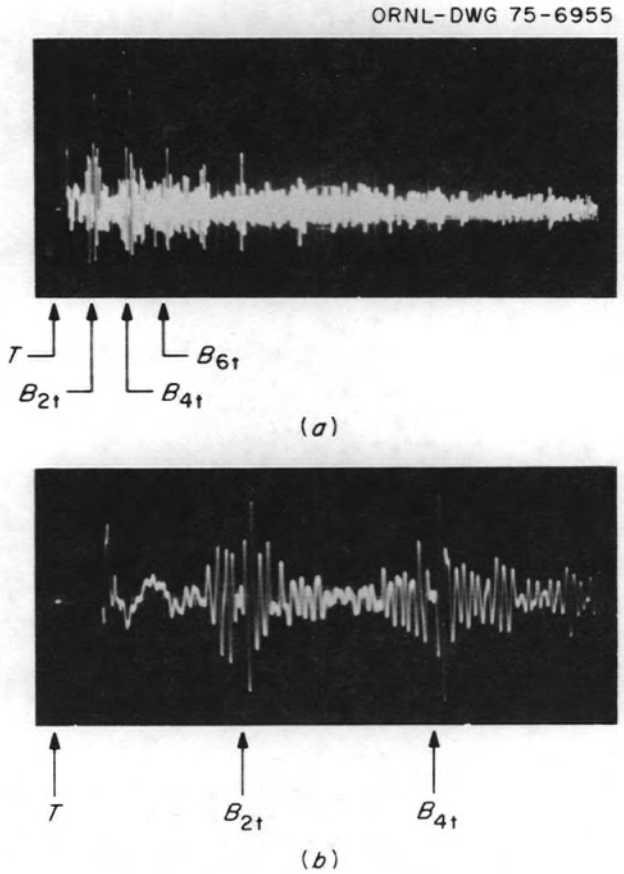

Fig. 12. Ultrasonic Pulse in 59.9-mm-thick Steel. (a) y axis 7.53 V/division; time base 52 μsec/division. (b) y axis 7.53 V/division; time base 10.4 μsec/division.

Table 2. Paths and Arrival Times of Echoes

Time	Possible Different Paths	Echo
	One Round Trip	
$2t_\ell$	$t_\ell + t_\ell$	$B_{2\ell}$
$t_\ell + t_t$	$t_\ell + t_t$, $t_t + t_\ell$	$B_{\ell,t}$
$2t_t$	$t_t + t_t$	B_{2t}
	Two Round Trips	
$4t_\ell$	$t_\ell + t_\ell + t_\ell + t_\ell$	$B_{4\ell}$
$3t_\ell + t_t$	$t_\ell + t_\ell + t_\ell + t_t$ $t_\ell + t_\ell + t_t + t_\ell$ $t_\ell + t_t + t_\ell + t_\ell$ $t_t + t_\ell + t_\ell + t_\ell$	$B_{3\ell,t}$
$2t_\ell + 2t_t$	$t_\ell + t_\ell + t_t + t_t$ $t_\ell + t_t + t_t + t_\ell$ $t_\ell + t_t + t_\ell + t_t$ $t_t + t_t + t_\ell + t_\ell$ $t_t + t_\ell + t_\ell + t_t$ $t_t + t_\ell + t_t + t_\ell$	$B_{2\ell,2t}$
$t_\ell + 3t_t$	$t_\ell + t_t + t_t + t_t$ $t_t + t_\ell + t_t + t_t$ $t_t + t_t + t_\ell + t_t$ $t_t + t_t + t_t + t_\ell$	$B_{\ell,3t}$
$4t_t$	$t_t + t_t + t_t + t_t$	B_{4t}
	Three Round Trips	
$6t_\ell$	$t_\ell + t_\ell + t_\ell + t_\ell + t_\ell + t_\ell$	$B_{6\ell}$
$5t_\ell + t_t$	6 different paths	$B_{5\ell,t}$
$4t_\ell + 2t_t$	15 different paths	$B_{4\ell,2t}$
4 other times	42 different paths	
	Four Round Trips	
$8t_\ell$	$t_\ell + t_\ell + t_\ell + t_\ell + t_\ell + t_\ell + t_\ell + t_\ell$	$B_{8\ell}$
8 other times	255 different paths	
	n Round Trips	
$(2n + 1)$ different times	2^{2n} different paths	

The transducer is designed to give a better efficiency for the radially polarized transverse wave than for the longitudinal wave. This is done by making the vertical component of the stationary magnetic flux larger than the radial component, and also by locating the pickup coil outside the driver coil. Consequently, B_{2t} is larger than $B_{2\ell}$ in every picture. A flaw signal (F_1) is noticeable in Fig. 9. This shows that the radial transverse wave is capable of flaw detection.

Only transverse wave signals are distinguished in the case of steel (ferromagnetic material) (Fig. 12) because many small broad signals are not fully explained. The longitudinal wave velocity (C_ℓ) and transverse wave velocity (C_t) of the samples were measured from $B_{2\ell}$ and B_{2t} of Figs. 7 and 9 through 12, and are shown in Table 3. The small difference between the measured and Handbook values is mainly due to the different samples used.

Table 3. Wave Velocities

Material	Velocity, m/sec			
	Measured Value		Reported Value[a]	
	C_ℓ	C_t	C_ℓ	C_t
Aluminum	6400	3120	6420	3040
Brass	4550	2250	4700	2110
Copper	5000	2450	5010	2270
Steel		3330		3240

[a]D. E. Gray et al., eds., *American Institute of Physics Handbook*, McGraw-Hill, New York, 1957, p. 3-80.

CONSIDERATIONS ABOUT MODE CONVERSION

Echo signals similar to those in Fig. 7 have already been detected by conventional piezo electric transducers.[15-17] However, a proper explanation of the phenomenon was not made in any of the referenced works.

---

[15]J. Krautkrämer and H. Krautkrämer, *Ultrasonic Testing of Materials*, Springer-Verlag, New York, 1969.

[16]W. Grabendörfer and J. Krautkrämer, "Impuls-Echo-Prüfung an Plattenförmigen Korpern," *Z. Metallk.* 49: 22–26 (1958).

[17]M. A. Kassem, "Echo-Phantoms," *Iron Steel Int.* 29(12): 503–9 (1956).

The mode conversion between a longitudinal wave and a radially polarized transverse wave is very different from the mode conversion between a longitudinal wave and a linearly polarized transverse wave.

The restraint by the solid surface and the sharpness of the ultrasonic beam lead us to the following simple considerations that help us to understand the mode conversion between a longitudinal wave and a radially polarized transverse wave. When a longitudinal wave that has an axially symmetric intensity distribution arrives at a boundary [see Fig. 13(a)], it deforms the boundary. A point A on the boundary is displaced not only vertically but also horizontally by this deformation. Horizontal displacements distribute symmetrically around the axis, producing a radially polarized transverse wave. When a radially polarized transverse wave arrives at a boundary [see Fig. 13(b)] and causes a radial horizontal displacement, some of the material is squeezed out vertically because the material can not shrink infinitely. Consequently, a point, B, on the boundary is displaced not only horizontally, but also vertically, and some longitudinal wave is generated. When a linearly polarized transverse wave arrives vertically [see Fig. 13(c)] at a boundary and causes a horizontal displacement, no vertical displacement occurs because a one-direction horizontal displacement can be absorbed into the spreading material without causing any vertical displacement.

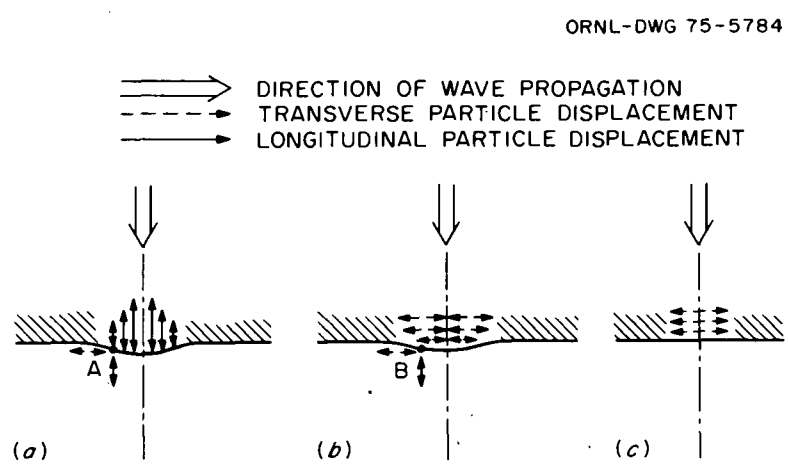

Fig. 13. Interactions of Incident Beams of Ultrasound with Surface, Showing Possibility of Mode Conversion. (a) Incident longitudinal wave produces lateral compression, generating radially polarized transverse wave. (b) Lateral restraint of vibrations from incident radially polarized transverse wave sets up longitudinal vibrations in reflected wave. (c) Vibrations of incident linearly polarized transverse wave are not restrained, so no mode conversion occurs.

Very high sensitivity and special care are necessary for both a longitudinal wave and a radially polarized transverse wave to be detected by a piezoelectric transducer made for a longitudinal wave.[15-17] In the case of a conventional piezoelectric transducer, there is usually a liquid layer between the transducer and sample (see Fig. 14). Only longitudinal waves (ℓ_1) can travel through liquid. A longitudinal wave (ℓ_2) and a small amount of radially polarized transverse wave (t_2) are generated at the boundary of liquid and solid through mode conversion. At the far end of the solid, mode conversion occurs, and both waves (ℓ_3, t_3) are generated. The longitudinal wave (ℓ_3) is detected easily as longitudinal wave (ℓ_4), but the radially polarized transverse wave (t_3) can be detected only as longitudinal wave (ℓ_5) after mode conversion at the boundary. Thus, very high sensitivity and special care are necessary to detect ℓ_5, since its amplitude has been made smaller and smaller through several mode conversions and is too small to be detected by usual techniques.

ORNL-DWG 75-5785

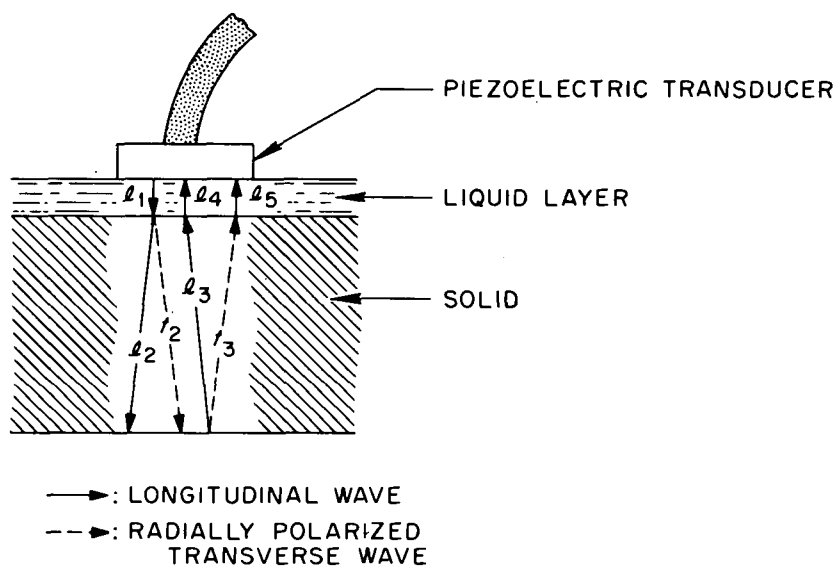

Fig. 14. Mechanism of Detecting Transverse Ultrasonic Waves with a Piezoelectric Transducer.

CONCLUSION

The electromagnetic ultrasonic transducer generated and detected a relatively large amount of radially polarized transverse wave and a small amount of longitudinal wave in nonmagnetic samples. The characteristics of the transducer for a ferromagnetic sample were different, mainly because of the distortion of the magnetic field by the sample. It was also shown experimentally with the electromagnetic transducer that the mode conversion between a longitudinal wave and a radially polarized transverse wave occurs with a fairly good efficiency at the vertical reflection.

ACKNOWLEDGMENTS

The author would like to express his appreciation to R. W. McClung for his encouragement for this research work, for his review of this report, and for many helpful suggestions; to W. E. Deeds, C. V. Dodd, S. D. Snyder, and S. Peterson for their review of this report and their many helpful suggestions; and to L. D. Chitwood for suggestions about construction of the coils. He would also like to acknowledge the help of Julia L. Bishop of the Metals and Ceramics Division Reports Office in the typing of this report.

ORNL-5064
UC-25 — Materials

INTERNAL DISTRIBUTION

(3) Central Research Library
Document Reference Section
(3) Laboratory Records Department
Laboratory Records, ORNL RC
ORNL Patent Office
G. M. Adamson, Jr.
C. R. Brinkman
D. A. Canonico
K. V. Cook
F. L. Culler
J. E. Cunningham
J. H. DeVan
C. V. Dodd
G. G. Fee
B. E. Foster
W. O. Harms
R. F. Hibbs
(3) M. R. Hill
(20) K. Kawashima
A. L. Lotts
W. R. Martin
W. McClain
(20) R. W. McClung
H. E. McCoy
J. R. McGuffey
C. J. McHargue
P. Patriarca
S. Peterson
H. Postma
M. W. Rosenthal
J. L. Scott
W. A. Simpson, Jr.
G. M. Slaughter
J. H. Smith
S. D. Snyder
D. B. Trauger
T. N. Washburn
J. R. Weir, Jr.
G. D. Whitman
W. C. Leslie (consultant)
John Moteff (consultant)
Hayne Palmour III (consultant)
J. W. Prados (consultant)
N. E. Promisel (consultant)
G. V. Smith (consultant)
D. F. Stein (consultant)

EXTERNAL DISTRIBUTION

ARGONNE NATIONAL LABORATORY, 9700 South Cass Avenue, Argonne, IL 60439

K. J. Reimann

GENERAL ELECTRIC COMPANY, 175 Curtner Avenue, San Jose, CA 95125

R. A. Day

HANFORD ENGINEERING DEVELOPMENT LABORATORY, P.O. Box 1970, Richland, WA 99352

J. C. Spanner

SANDIA CORPORATION, P.O. Box 5800, Albuquerque, NM 87115

D. W. Ballard

UNIVERSITY OF TENNESSEE, Department of Physics and Astronomy, Knoxville, TN 37916

L. Adler
W. E. Deeds

USERDA, DIVISION OF CONTROLLED THERMONUCLEAR RESEARCH, Washington, DC 20545

K. M. Zwilsky

USERDA, DIVISION OF REACTOR RESEARCH AND DEVELOPMENT, Washington, DC 20545

C. W. Cunningham
R. Hahn
E. E. Hoffman
K. E. Horton

USERDA, OAK RIDGE OPERATIONS, P.O. Box E, Oak Ridge, TN 37830

Director, Reactor Division
Research and Technical Support Division

USERDA, TECHNICAL INFORMATION CENTER, Office of Information Services, P.O. Box 62, Oak Ridge, TN 37830

(208) For distribution as shown in TID-4500 Distribution Category, UC-25 Materials.

☆ U.S. GOVERNMENT PRINTING OFFICE: 1975-748-189/62