ORNL-TM-4956

Cy 1

MARTIN MARIETTA ENERGY SYSTEMS LIBRARIES

3 4456 0285181 2

Calculation of Magnetic Fields from Time-Varying Currents in the Presence of Conductors

C. V. Dodd
W. E. Deeds

OAK RIDGE NATIONAL LABORATORY
CENTRAL RESEARCH LIBRARY
DOCUMENT COLLECTION
LIBRARY LOAN COPY
DO NOT TRANSFER TO ANOTHER PERSON
If you wish someone else to see this document, send in name with document and the library will arrange a loan.

OAK RIDGE NATIONAL LABORATORY
OPERATED BY UNION CARBIDE CORPORATION • FOR THE U.S. ATOMIC ENERGY COMMISSION

This report was prepared as an account of work sponsored by the United States Government. Neither the United States nor the Energy Research and Development Administration, nor any of their employees, nor any of their contractors, subcontractors, or their employees, makes any warranty, express or implied, or assumes any legal liability or responsibility for the accuracy, completeness or usefulness of any information, apparatus, product or process disclosed, or represents that its use would not infringe privately owned rights.

ORNL-TM-4958

Contract No. W-7405-eng-26

METALS AND CERAMICS DIVISION

CALCULATION OF MAGNETIC FIELDS FROM TIME-VARYING CURRENTS IN THE PRESENCE OF CONDUCTORS

C. V. Dodd and W. E. Deeds

JULY 1975

NOTICE This document contains information of a preliminary nature and was prepared primarily for internal use at the Oak Ridge National Laboratory. It is subject to revision or correction and therefore does not represent a final report.

OAK RIDGE NATIONAL LABORATORY
Oak Ridge, Tennessee 37830
operated by
UNION CARBIDE CORPORATION
for the
U.S. ENERGY RESEARCH AND DEVELOPMENT ADMINISTRATION

MARTIN MARIETTA ENERGY SYSTEMS LIBRARIES

3 4456 0285181 2

CONTENTS

ABSTRACT 1
INTRODUCTION 2
DERIVATIONS FROM THE VECTOR POTENTIAL 4
DISCUSSION OF MAGFLD 11
VERIFICATION AND TESTING OF THE PROGRAM 29
SUMMARY, CONCLUSIONS, AND RECOMMENDATIONS 32
ACKNOWLEDGMENTS 32

CALCULATION OF MAGNETIC FIELDS FROM TIME-VARYING CURRENTS IN THE PRESENCE OF CONDUCTORS[1]

C. V. Dodd W. E. Deeds[2]

ABSTRACT

We have derived the equations for the magnetic field for the case of a cylindrically symmetric coil of rectangular cross section being driven by a sinusoidal current above conducting plates. Computer programs were written to numerically evaluate these equations.

The most general program calculates the field for a coil above multiple (up to 9) plates, each having any resistivity and thickness. The field is calculated anywhere in or behind the conductors, and for five different values of coil-to-conductor spacing. The total eddy-current power dissipated in the conductors is also calculated, as well as the magnetic field at the center of the coil.

The calculations agree with calculations and experimental measurements performed by others, although only a few cases could be compared.

Equations have also been derived for the Fourier analysis of pulses, the power density, and the eddy-current force density; but no programs have been written for these.

[1]Funding provided by the Superconducting Magnet Development Program of the Thermonuclear Division.

[2]Consultant from The University of Tennessee.

INTRODUCTION

Eddy currents have been used for many years to nondestructively test critical components in the nuclear and aircraft industries. In recent years, many advances have been made in the analytical solution of eddy-current problems. In 1963, relaxation or finite difference calculations were made for a number of eddy-current problems.[3,4,5,6] These calculations were relatively expensive to perform and were not very accurate (~10%), but they were very general.

Later, integral equations were obtained[7,8,9,10,11,12] for coils above conducting planes and coils coaxial with multiple cylinders.

---

[3]C. V. Dodd, "Eddy-Current Impedance Calculated by a Relaxation Method," pp. 300–14 in *Proceedings of the Symposium on Physics and Nondestructive Testing*, Southwest Research Institute, San Antonio, Texas, 1963.

[4]C. V. Dodd, *A Solution to Electromagnetic Induction Problems*, ORNL-TM-1185 (August 1965). M.S. Thesis, The University of Tennessee.

[5]C. V. Dodd, *Solutions to Electromagnetic Induction Problems*, ORNL-TM-1842 (June 1967). Ph.D. Thesis, The University of Tennessee.

[6]J. N. Tunstall and C. V. Dodd III, *A Computer Program to Solve Eddy-Current Problems*, K-1740 (April 1968).

[7]C. V. Dodd and W. E. Deeds, "Analytical Solutions to Eddy-Current Probe Coil Problems," *J. Appl. Phys.* 39(6): 2829–38 (May 1968).

[8]C. V. Dodd, W. E. Deeds, J. W. Luquire, and W. G. Spoeri, *Some Eddy-Current Problems and Their Integral Solutions*, ORNL-4384 (April 1969).

[9]C. V. Dodd, W. E. Deeds, and J. W. Luquire, "Integral Solutions to Some Eddy Current Problems, " *Int. J. Nondestr. Test.* 1(1): 29–90 (June 1969).

[10]J. W. Luquire, W. E. Deeds, and C. V. Dodd, "Alternating Current Distribution Between Planar Conductors," *J. Appl. Phys.* 41(10): 3983–91 (September 1970).

[11]J. W. Luquire, W. E. Deeds, and C. V. Dodd, "Axially Symmetric Eddy Currents in a Spherical Conductors," *J. Appl. Phys.* 41(10): 3976–82 (September 1970).

[12]C. C. Cheng, C. V. Dodd, and W. E. Deeds, "General Analysis of Probe Coils Near Stratified Conductors," *Int. J. Nondestr. Test.* 3(2): 109–30 (September 1971).

Computer programs[13,14,15,16,17] were written for these cases and the results obtained were quite accurate.

Experiments have been designed using these programs and the results have been quite good.[18,19,20,21,22]

In all of these eddy-current phenomena, we first calculated the vector potential and then calculated the physically observable phenomena from the vector potential. These phenomena include eddy-current density, coil voltage, coil impedance, power loss in a conductor, force density in a conductor and magnetic and electric fields inside or outside of a conductor. Although these calculations have been made with the assumption of a sinusoidal driving current, any type of current pulse can be obtained using a Fourier synthesis.

---

[13]C. V. Dodd and W. E. Deeds, "Computer Design of Eddy-Current Tests," pp. 199–203 in *Proceedings of the Fifth International Conference on Nondestructive Testing, Canada, 1967,* The Queen's Printer, Ottawa, Canada, 1969.

[14]C. V. Dodd, W. E. Deeds, J. W. Luquire, and W. G. Spoeri, "Analysis of Eddy-Current Problems with a Time-Sharing Computer," *Mater. Eval.* 27(7): 165–68 (July 1969).

[15]J. W. Luquire, W. E. Deeds, C. V. Dodd, and W. G. Spoeri, *Computer Programs for Some Eddy Current Problems,* ORNL-TM-2501 (August 1969).

[16]W. A. Simpson, J. W. Luquire, C. V. Dodd, and W. G. Spoeri, *Computer Programs for Some Eddy-Current Problems — 1970,* ORNL-TM-3295 (June 1971).

[17]C. V. Dodd, C. C. Cheng, W. A. Simpson, D. A. Deeds, and J. H. Smith, *The Analysis of Reflection-Type Coils for Eddy-Current Testing,* ORNL-TM-4107 (April 1973).

[18]C. V. Dodd, W. E. Deeds, and W. G. Spoeri, "Optimizing Defect Detection in Eddy Current Testing," *Mater. Eval.* 29(3): 59–63 (March 1971).

[19]C. V. Dodd and W. A. Simpson, "Measurement of Small Magnetic Permeability Changes by Eddy-Current Techniques," *Mater. Eval.* 29(10): 217–21 (October 1971).

[20]C. V. Dodd and W. A. Simpson, Jr., *Thickness Measurements Using Eddy-Current Techniques,* ORNL-TM-3712 (March 1972).

[21]C. V. Dodd, C. C. Cheng, C. W. Nestor, Jr., and R. B. Hofstra, *Design of Induction Probes for Measurement of Level of Liquid Metals,* ORNL-TM-4175 (May 1973).

[22]C. V. Dodd, J. H. Smith, and W. A. Simpson, *Eddy-Current Evaluation of Nuclear Control Rods,* ORNL-TM-4321 (September 1973).

DERIVATIONS FROM THE VECTOR POTENTIAL

The vector potential in the coil region for a coil above an arbitrary number of conductors, as shown in Fig. 1, has been derived in the form:

$$A^{c}(r,Z) = \frac{N\,I\,\mu_o}{2(R_2 - R_1)L_3}\int_0^\infty \frac{1}{\alpha^3} J(R_2, R_1) J_1(\alpha r) e^{-\alpha Z}$$

$$\times \left\{ \left[\frac{V_{12}(k,1)}{V_{22}(k,1)} e^{-\alpha(L_6 + L_2)} + e^{\alpha Z} \right] \times \left[1 - e^{-\alpha(Z - L_6 - L_2)} \right] + \right. \tag{1}$$

$$\left. \left[\frac{V_{12}(k,1)}{V_{22}(k,1)} e^{-\alpha Z} + e^{\alpha Z} \right] \left[1 - e^{-\alpha(L_2 + L_6 + L_3 - Z)} \right] \right\} d\alpha \ .$$

The functions $J(R_2, R_1)$ are defined as

$$J(R_2, R_1) \equiv \int_{\alpha R_1}^{\alpha R_2} x\, J_1(x)\,dx \ . \tag{2}$$

The terms $V_{\ell 2}(n,1)$ represent transformation matrix elements between the first region (lowermost) and the nth region. Their derivation is given in another paper,[12] and their calculation is given in other papers.[12,17] The pertinent computer program is in this paper. All of the dimensions and properties of the conductors are contained in these terms. The coil length, L_3, the coil inner and outer radii, R_1 and R_2, the minimum lift-off, L_6, and the lift-off increment, L_2, are shown in Fig. 1. The number of turns is N, and the current per turn is I. Due to the axial symmetry, the direction of the vector potential will always be entirely in the θ direction.

The vector potential for any region, n, below the coil is given by:

$$A^{n}(r,Z) = \frac{N\,I\,\mu_o}{2(R_2 - R_1)L_3}\int_0^\infty \frac{J(R_2, R_1) J_1(\alpha r)}{\alpha^3\, V_{22}(k,1)} e^{-\alpha(L_2 + L_6)} \left(1 - e^{-\alpha L_3}\right) \tag{3}$$

$$\times \left[V_{12}(n,1) e^{-\alpha_n Z} + V_{22}(n,1) e^{\alpha_n Z} \right] d\alpha \ .$$

ORNL-DWG 75-4600

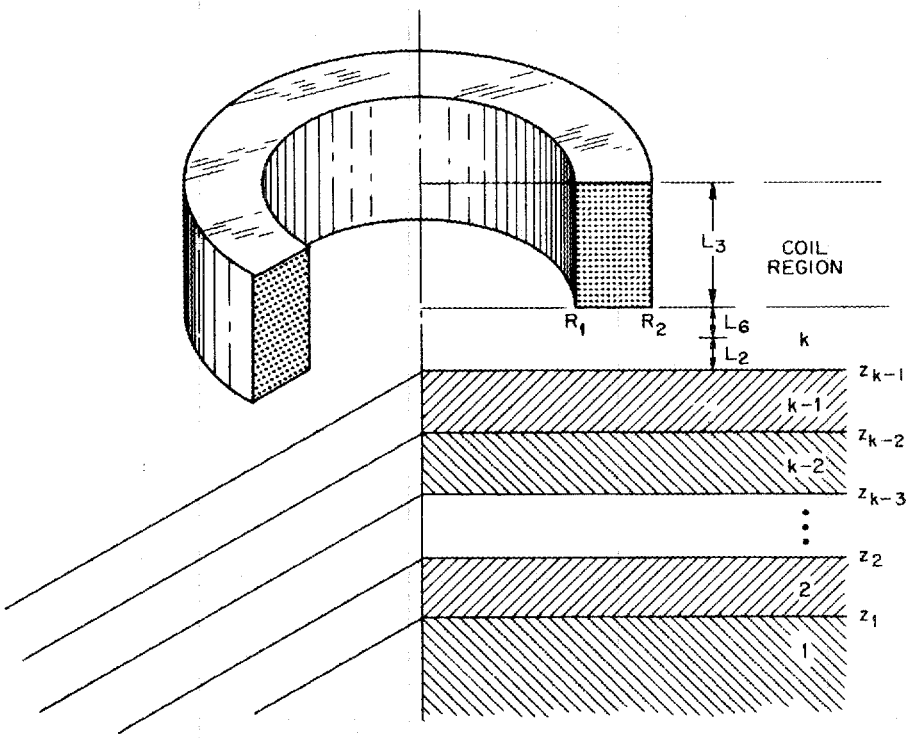

Fig. 1. Coil Above Multiple Planar Conductors.

The r and Z components of the magnetic field can be obtained from the vector potential by the relations (in cylindrical coordinates):

$$B_r = -\frac{\partial A}{\partial Z} \; . \tag{4}$$

and

$$B_Z = \frac{1}{r}\frac{\partial (rA)}{\partial r} \; . \tag{5}$$

The expressions for the magnetic field in any region below the coil (in terms of the variables used in the computer program) are:

$$B_Z^n(r,Z) = \frac{N_3 I_9 \mu_o}{2(R_2 - R_1)L_3 R_5} \int_o^\infty \frac{e^{-\alpha L_6} e^{-\alpha L_2}}{\alpha^2} J(R_2, R_1) \left[1 - e^{-\alpha L_3} \right]$$
$$\times J_o(\alpha r) \left\{ \frac{V_{12}(n,1)}{V_{22}(k,1)} e^{-\alpha_n Z} + \frac{V_{22}(n,1)}{V_{22}(k,1)} e^{\alpha_n Z} \right\} d\alpha \; . \tag{6}$$

All dimensions have been normalized by dividing the lengths by the coil mean radius, R_5, and multiplying all α's by R_5. The symbol α_n is defined as $\alpha_n = \sqrt{\alpha^2 + j\omega\mu_n\sigma_n R^2}$ and is dimensionless.

The r component is given by:

$$B_r^n(r,Z) = \frac{N\ I\ \mu_o}{2(R_2 - R_1)L_3 R_5} \int_o^\infty \frac{e^{-\alpha L_6}\ e^{-\alpha L_2}\ J(R_2,\ R_1)}{\alpha^3} \left[1 - e^{-\alpha L_3}\right]$$

$$\times\ J_1(\alpha r) \left\{ -\frac{V_{12}(n,1)\alpha_n e^{-\alpha_n Z}}{V_{22}(k,1)} + \frac{V_{22}(n,1)\alpha_n e^{\alpha_n Z}}{V_{22}(k,1)} \right\} d\alpha\ . \tag{7}$$

The Z component of the field at the center of the coil is:

$$B(center) = \frac{N_3\ I_9\ \mu_o}{2(R_2 - R_1)L_3 R_5} \int_o^\infty \frac{J(R_2,\ R_1)}{\alpha^2} \times$$

$$\left\{ \frac{V_{12}(k,1)}{V_{22}(k,1)}\ e^{-2\alpha L_2}\ e^{-2\alpha L_6}\ e^{-\alpha L_3/2}(1-e^{-\alpha L_3}) \right.$$

$$\left. + 2(1 - e^{-\alpha L_3/2}) \right\} d\alpha\ . \tag{8}$$

The coil impedance[17] is given as:

$$Z = \frac{j\ \omega\ \pi\ N_3^2\ \mu_o\ R_5}{(R_2 - R_1)^2 L_3^2} \int_0^\infty \frac{J^2(R_2,\ R_1)}{\alpha^6} \left\{ 2\alpha L_3 + 2e^{-\alpha L_3} - 2 \right.$$

$$\left. + e^{-2\alpha L_6}\ e^{-2\alpha L_2}(1-e^{-\alpha L_3})^2\ \frac{V_{12}(k,1)}{V_{22}(k,1)} \right\} d\alpha\ . \tag{9}$$

The total power dissipated by the eddy currents flowing in the metal is $I^2 R\ell Z$, where I is the RMS current in the foil.

The total power dissipated then becomes

$$P = \frac{\omega \pi N_3^2 \mu_o R_5 I_9^2}{2(R_2 - R_1)^2 L_3^2} \int_0^\infty \frac{J^2(R_2, R_1)\, e^{-2\alpha L_6}\, e^{-2\alpha L_2}}{\alpha^6} \times (1 - e^{-\alpha L_3})^2 \, Im\left(-\frac{V_{12}(k,1)}{V_{22}(k,1)}\right) d\alpha \ , \tag{10}$$

where I_9 is the zero-to-peak current.

Since Eqs. (6), (7), (8), and (10) are very similar and rapidly converge (with one exception), they are all calculated in a single integral program, MAFGLD. The exception is the term

$$\int_0^\infty \frac{J(R_2, R_1)\, 2(1 - e^{-\alpha L_3/2})}{\alpha^2} d\alpha \ , \tag{11}$$

which is equal to the magnetic field of the coil in air (with the coefficients in front of the integral factored out):

$$L_3 \ \ell n \left[\frac{R_2 + \sqrt{R_2^2 + L_3^2/4}}{R_1 + \sqrt{R_1^2 + L_3^2/4}} \right] . \tag{12}$$

The expression in (12) is used in the program in place of the expression in (11). The program is given and discussed in greater detail later in this report.

The density of eddy currents generated in the conductors is given by:

$$\vec{J} = \sigma \vec{E} = -\sigma \frac{\partial \vec{A}}{\partial t} = -j\omega\sigma \vec{A}^{(n)}(r,Z) \ . \tag{13}$$

The eddy currents, all in the θ direction, are

$$J = \frac{-j\omega\sigma_n N_3 I_9 \mu_o}{2(R_2 - R_1)L_2} \int_0^\infty \frac{J(R_2, R_1)J_1(\alpha r)}{\alpha^3 V_{22}(k,1)} e^{-\alpha(L_2 + L_6)}[1 - e^{-\alpha L_3}]$$

$$\times [V_{12}(n,1)e^{-\alpha_n Z} + V_{22}(n,1)e^{\alpha_n Z}]d\alpha \ . \tag{14}$$

The power dissipated per unit volume due to the eddy currents is:

$$P = -\vec{J}\cdot\vec{E} = -\sigma E^2 = \sigma\left[\omega A^n \cos(\omega t + \phi)\right]^2 , \tag{15}$$

where ϕ is the phase angle between the current in the coil and the vector potential at a point in a metal. The instantaneous power dissipated per unit volume due to eddy currents is

$$P^n(r,Z) = \sigma_n \left\{ \omega \cos\left[\omega t + atn\left(\frac{Im\ A^n(r,Z)}{R\ell\ A^n(r,Z)}\right)\right] |A^n(r,Z)| \right\}^2 . \tag{16}$$

If a Fourier analysis is used, the vector potential must be first summed, then squared.

The eddy current force density generated in any region, n, in the conductors will be

$$\vec{F} = \hat{e}_Z\ \sigma_n \frac{\partial A^n}{\partial t}\left(B_r - \frac{\partial A^n}{\partial t}\right) - \hat{e}_r\left(B_Z + \frac{1}{r}\ \frac{\partial(rA^n)}{\partial r}\right)\sigma_n \frac{\partial A^n}{\partial t} , \tag{17}$$

where B_r and B_Z are the magnetic field components from an external magnetic field. The vector potential must again be expressed as a function of time, and multiplied in this form. The Fourier components must be summed to obtain the vector potential before multiplication in Eq. (17). The instantaneous force density is

$$\vec{F} = \omega\, \sigma_n \cdot |A^n(r,Z)| \quad sin\ (\omega t + \phi_1)$$

$$\times \left\{ \hat{e}_Z \left[\left|\frac{\partial A^n(r,Z)}{\partial Z}\right| \quad cos\ (\omega t + \phi_2) - B_r \right] \right. \tag{18}$$

$$\left. + \quad \hat{e}_r \left[\left|\frac{1}{r}\frac{\partial r A^n(r,Z)}{\partial r}\right| \quad cos\ (\omega t + \phi_3) + B_Z \right] \right\} .$$

The value of $A^n(r,Z)$ is given in Eq. (3) and the tangent of the angle ϕ_1 is the ratio of the imaginary part of $A^n(r,Z)$ to the real part of $A^n(r,Z)$, or

$$\phi_1 = atn\ \frac{Im\ A^n(r,Z)}{R\ell\ A^n(r,Z)} . \tag{19}$$

The value of $-\frac{\partial A^n(r,Z)}{\partial Z}$ is the radial component of the magnetic field, $B_r^n(r,Z)$, and is given in Eq. (7).

$$\phi_2 = atn\ \frac{Im\ B_r^n(r,Z)}{R\ell\ B_r^n(r,Z)} . \tag{20}$$

The value of $\frac{1}{r}\frac{\partial r A^n(r,Z)}{\partial r}$ is the Z component of the magnetic field, $B_Z^n(r,Z)$, and is given in Eq. (6).

$$\phi_3 = atn\ \frac{Im\ B_Z^n(r,Z)}{R\ell\ B_Z^n(r,Z)} . \tag{21}$$

Due to the length of the expressions, they will not be repeated here, but all the components for the expressions are already calculated in the computer program MAGFLD.

The vector potentials and magnetic fields, already given for sinusoidal currents, may be calculated for any wave form using Fourier synthesis. The current wave form may be calculated from a series of sine and cosine functions as

$$I(t) = \frac{a_o}{2} + \sum_{m=1}^{\infty} \left[a_m \cos (m\, \omega_1\, t) + b_m \sin (m\, \omega_1\, t) \right], \tag{22}$$

where

$$a_m = \frac{\omega_1}{\pi} \int_{-T/2}^{T/2} I(t) \cos (m\, \omega_1\, t) dt \qquad m = 0,\ 1,\ 2,\ 3\ \cdots \tag{23}$$

and

$$b_m = \frac{\omega_1}{\pi} \int_{-T/2}^{T/2} I(t) \sin (m\, \omega_1\, t) dt \qquad m = 1,\ 2,\ 3\ \cdots \tag{24}$$

Each coefficient, a_m or b_m, of this current is substituted for I in the equation for the vector potential or the magnetic field, at a frequency $m\ \omega_1$. The Eqs. (3), (6), and (7) can then be calculated in a normal manner, for $A^n(r,Z,\omega)$, $B_Z^n(r,Z,\omega)$, and $B_r^n(r,Z,\omega)$.

Then, we can express the fields as

$$A^n(r,Z,t) = A^n(r,Z,0) + \sum_{m=1}^{\infty} \left[\left| A_a^n(r,Z,m\ \omega_1) \right| \cos (m\, \omega_1\, t + \phi_m) + \left| A_b^n(r,Z,m\ \omega_1) \right| \sin (m\, \omega_1\, t + \phi_m) \right]. \tag{25}$$

If we redefine $A^n(r,Z,m\ \omega_1)$ so the calculation is made with unit current (the constants a_m and b_m are factored out), we have

$$A^n(r,Z,t) = A^n(r,Z,0)\,\frac{a_0}{Z} \sum_{m=1}^{\infty}\Big[a_m\left|A^n(r,Z,m\,\omega_1)\right| cos\ (m\,\omega_1\ t + \phi_m) + b_m\left|A^n(r,Z,m\,\omega_1)\right| sin\ (m\,\omega_1\ t + \phi_m)\Big]. \tag{26}$$

Thus, the coefficients, and therefore the shape of the input current pulse, can be varied to determine the effects on the vector potential without having to recalculate the values of $|A^n(r,Z,m\,\omega_1)|$.

In order to determine the total power dissipated and the total force in given regions, the vector potentials must first be summed over the frequencies, and then the power or force densities multiplied by the incremental volumes and summed over the regions.

DISCUSSION OF MAGFLD

The program, MAGFLD, is designed to calculate the magnetic field (in teslas) at any location, r and Z, either in or behind the metal from the coil. In addition, the program calculates the field at the center of the coil and the total eddy-current power (in watts) dissipated by the coil. In addition, the ratio of the absolute value of the field at the point, r and Z, to the field at the center is given. The field has both an r and Z component, and each of these has real and imaginary components. The calculations are made at five different values of lift-off (coil-to-conductor spacing). The program numerically integrates the integrand starting with $\alpha = 0$ and increasing. The program automatically stops when the ratio of the sum of the changes to the sum of the integrals is less than one part per million. The value of alpha, the absolute sum of the integrals, the absolute sum of the last changes in the integrals, and their ratio are printed out to show convergence. This printout could probably be deleted after experience is gained using the program.

The program is written in the BASIC language. The input data to run the program are given in Table 1. The statements with line numbers are typed into the program, as shown in the program listing. The DATA statements are used to define the conductors, and start in line 800 with the lowermost region, 1, and increase to the kth region, usually an air layer immediately below the coil.

The program listing and a sample run are given for the coil shown in Fig. 2. The program listing is "interrupted" at various points for explanations. The actual program statements all have line numbers, but the explanations do not.

Table 1. Input Data for MAGFLD

Line Number	Variables, Definitions, and Units		
260	R1	Inner radius of coil	Meters
270	R2	Outer radius of coil	Meters
280	L3	Length of coil	Meters
330	L6	Minimum spacing between coil and 1st conductor	Meters
360	N3	Number of turns	- -
420	I9	Current per turn	Amperes, zero to peak
440	F	Operating frequency	Hertz
450	L2	Incremental variation in lift-off	Meters
510	N9	Number of layers below coil (number of conductors + 1)	- -
520	N8	Layer in which field is to be calculated	- -
760	R8	Radial location of field point	Meters
770	Z7	Distance of the field below the top of the N8th layer	Meters

	Data Statements			
800	DATA	1E10 (any big No.),	1E10, (ρ; very large for air),	1 (relative permeability)
810	DATA	(thickness of 2nd layer in meters),	(resistivity of 2nd layer),	(relative permeability of 2nd layer
.				
.				
.				
890	DATA	(unused dummy data point),	1E10 (ρ of air),	1 (μ_{rel} of air)

Program Listing of MAGFLD

```
00001 REM MAGFLD                    20 JAN 1975
00002 REM PRØGRAM TØ CALCULATE THE R & Z CØMPØNENTS ØF THE MAGNETIC
00003 REM FIELD FØR MULTIPLE CØNDUCTØRS.
00040 DIM A(5),B(5),C(5),D(5),E(5),F(5)
00050 DIM G(5),L(5),M(5),P(5),Q(5)
00199 REM CØNSTANT
00200 P9=3.14159
00210 P8=180/P9
00249 REM CØIL DATA IN METERS
00260 R1=.03175
00270 R2=.0508
00280 L3=.01778
00290 R5=(R1+R2)/2
00330 L6=.0005
00360 N3=100
00420 I9=338.709
00440 F=2.5
00450 L2=.00025
00499 REM CØNDUCTØR DATA
00510 N9=3
00520 N8=1
00529 REM READ T,K,U
00530 PRINT"N","THICK(METERS)","R(MU-ØHM CM)","M,SIGMA","U PERM"
00535 FØR N=1 TØ N9
00537 READ T(N),R(N),U(N)
00539 NEXT N
00540 GØ SUB 600
00550 FØR N=1 TØ N9
00560 PRINT N,T(N),R(N),S(N),U(N)
00565 T(N)=T(N)/R5
00570 NEXT N
00580 GØ TØ 750
00599 REM SUBRØUTINE FØR M
00600 W=2*P9*F
00610 FØR N=1 TØ N9
00630 S(N)=0
00640 IF R(N)>1E9 THEN 660
00650 S(N)=789.57*U(N)*F*R5*R5/R(N)
00660 NEXT N
00670 D0=94.248*F*R5*R5/R(N8)
00680 RETURN
00750 T(N9)=0
00760 R8=.041275
00770 Z7=0
00799 REM DATA FØR CØNDUCTØRS
00800 DATA 1E10,1E10,1
00810 DATA .01,.01,1
00820 DATA 1,1E10,1
00999 REM PRINT CØIL DATA
01000 PRINT "R1=";R1;"     R2=";R2;"       DRIVER LENGTH =";L3
01020 PRINT"CØIL MEAN RADIUS";R5;"METERS   FREQUENCY";F
01040 PRINT "MIN LIFT-ØFF=";L6;"LIFT-ØFF INCREMENT=";L2
01045 PRINTN3;"TURNS,EACH CARRYING";I9;"AMPS"
01050 PRINT"MAG. FIELD AT R=";R8;"  Z=";Z7;" METERS BELØW";
01060 PRINT" SURFACE ØF CØND.";N8
```

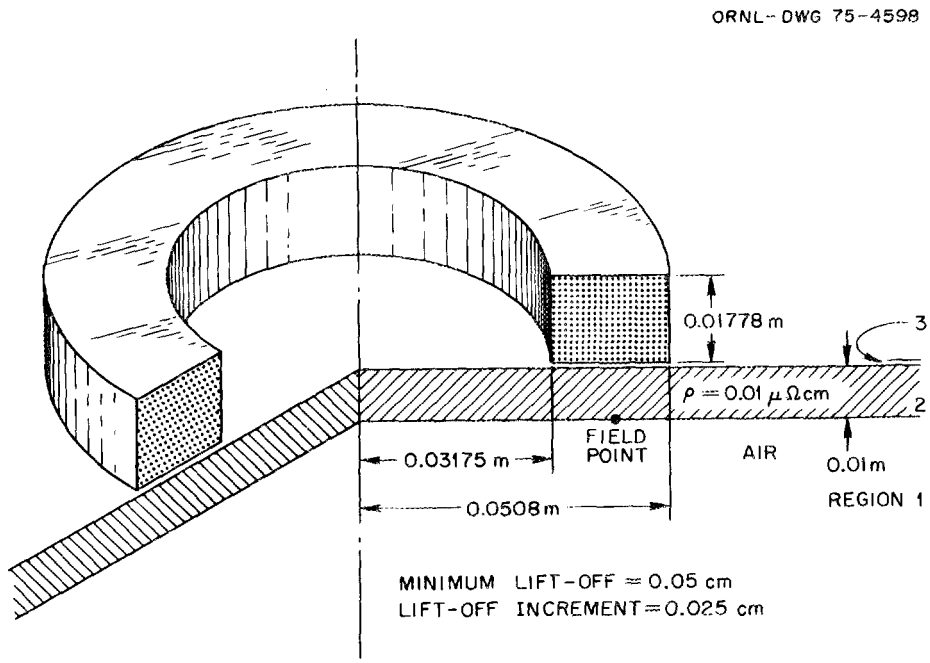

Fig. 2. Coil and Conductor Configuration for Sample Run.

All dimensions are normalized in terms of the mean coil radius, $R5$, except the thicknesses of the regions. (These are normalized in a later subroutine.)

```
01065 R3=R3/R5
01070 R1=R1/R5
01075 R2=R2/R5
01080 L3=L3/R5
01085 L2=L2/R5
01090 L6=L6/R5
01100 Z7=Z7/R5
01110 REM FØR INTEGRATIØNS
01115 PRINT"ALPHA","ABS SUM ØF FLDS";"LAST CHANGE","RATIØ"
01120 GØ SUB 1500
01125 PRINT "INTEGRAL HAS CØNVERGED"
01127 PRINT
01130 GØ SUB 6000
01490 GØ TØ 9900
```

The calculation of B_Z at the center of the coil for the coil in air is performed next. The current density factors are omitted.

```
01499 REM SUBRØUTINE FØR INTEGRATIØN
01500 A3=L3*LØG((R2+SQR(R2↑2+L3↑2/4))/(R1+SQR(R1↑2+L3↑2/4)))
01519 REM IN SUBRØUTINE FØR INTEGRATIØN
```

The sums of the integrands are set to zero prior to the start of the integration.

```
01520 FØR J=1 TØ 5
01530 A(J)=0
01540 B(J)=0
01550 C(J)=0
01560 D(J)=0
01570 E(J)=0
01580 F(J)=0
01590 G(J)=0
01614 NEXT J
```

The integral is computed from B1 to B2 in steps of S1. The initial values of B1, B2 and S1 are 0, 5 and 0.01, respectively. The integrand is evaluated at the midpoints of the small steps, S1. The variable of integration, α, is designated x. All calculations and summing of the integrand are done in the 2000 subroutine. When x is integrated over the first range, new boundaries are set. The integral is checked for convergence, and the step size S1 is increased depending on x. The procedure is repeated until the integral converges or until x = 80.

```
01630 B1=0
01640 B2=5
01650 S1=1E-2
01660 FØR X=B1+S1/2 TØ B2 STEP S1
01670 GØ SUB 2000
01680 NEXT X
01690 B1=B2
01700 B2=B2+5
01701 Q1=ABS(K2*A5)+ABS(N6*A5)+ABS(K3*A6)+ABS(N7*A6)+ABS(K1*A8)
01702 Q1=Q1+ABS(N5*A8)
01703 Q2=ABS(A(1))+ABS(B(1))+ABS(C(1))+ABS(D(1))+ABS(E(1))+ABS(F(1))
01705 Q3=Q1*5/(Q2*S1)
01706 PRINTX+S1/2,Q2,Q1,Q3
01707 IF Q3<1E-6 THEN 1790
01710 S1=.05
01720 IF X<9 THEN 1660
01730 S1=.1
01740 IF X<29 THEN 1660
01750 S1=.2
01760 IF X<39 THEN 1660
01770 S1=.5
01780 IF X<79THEN1660
01790 RETURN
01998 REM SUBRØUTINE FØR INTEGRANDS
01999 REM FØR J-FACTØR
02000 GØ SUB 2700
```

$J(R2,\ R1)/x^2$, $J_0(x\ R8)$ and $J_1(x\ R8)$ are calculated in subroutine 2700 and defined as *J5, J0 and J1,* respectively. Next the exponential factors are calculated with approximations for large values.

```
02020 W2=0
02030 W6=0
02080 W5=0
02100 IF X*L2>20THEN2120
02110 W2=EXP(-X*L2)
02120 IF X*L6>20 THEN 2200
02130 W6=EXP(-X*L6)
02200 IF X*L3>15 THEN 2230
02210 W5=EXP(-X*L3/2)
02230 W3=1-W5*W5
```

$$W2 = e^{-xL2},$$

$$W6 = e^{-xL6},$$

$$W3 = 1 - e^{-xL3},$$

$$W5 = e^{-xL3/2}.$$

The factors for the real parts of the integrand are calculated.

$$A5 = e^{-xL6}\ \frac{J(R2,\ R1)}{x^2}\ J_o\ (x\ R8)(1 - e^{-xL3})dx, \text{ used in } B_Z^{(n)}(r,Z)\ .$$

```
02260 A5=W6*X*J5*W3*J0*S1
```

$$A6 = e^{-xL6}\ \frac{J(R2,\ R2)}{x^3}\ (1 - e^{-xL3})\ J_1(x\ R8)dx, \text{ used in } B_r^{(n)}(r,Z)\ .$$

```
02263 A6=W6*J5*W3*J1*S1
```

$$A8 = \frac{J(R2,\ R1)}{x^2}\ e^{-2xL6}\ e^{-xL3/2}(1 - e^{-x\cdot L3})dx, \text{ used for } B \text{ (center)}\ .$$

```
02266 A8=X*J5*W6*W6*W5*W3*S1
```

$$A9 \quad \frac{J(R2,\ R1)}{x^6}\, e^{-2xL6}(1 - e^{-xL3})^2 dx \ .$$

```
02268 A9=W6*W6*W3*W3*J5*J5*S1
```

The lift-off exponential, $L(J) = e^{-xL2(J-1)}$, is calculated. For large values of $xL2(J-1)$, the exponential is set equal to zero.

```
02270 L(1)=1
02280 FØR J=2 TØ 5
02290 L(J)=0
02300 IF J*X*L2>20 THEN 2320
02310 L(J)=W2*L(J-1)
02320 NEXT J
```

The complex factors are now calculated in subroutine 3200.

$$Q1 + j\ Q2 = e^{-xL2(J-1)} \left\{ \frac{V_{12}(n,1)e^{-\alpha_n Z7} + V_{22}(n,1)e^{\alpha_n Z7}}{V_{22}(k,1)} \right\},$$

$$Q3 + j\ Q4 = e^{-xL2(J-1)} \left\{ \frac{V_{12}(n,1)\alpha_n e^{-\alpha_n Z7} - V_{22}(n,1)\alpha_n e^{\alpha_n Z7}}{V_{22}(k,1)} \right\},$$

$$Q5 + j\ Q6 = e^{-2xL2(J-1)} \left\{ \frac{V_{12}(k,1)}{V_{22}(k,1)} \right\} .$$

```
02329 REM FØR GAMMA FACTØR
02330 GØ SUB 3200
02340 FØR J=1 TØ 5
02349 Q6=N5*L(J)*L(J)
```

Next, the integrands are summed. The integrands are denoted as follows:

$$A(J) + j\ B(J) = \int B_Z^n\ dx,$$

$$C(J) + j\ D(J) = \int B_r^n\ dx,$$

$$E(J) + j\ F(J) = \int B_Z(center)\ dx,$$

$$j\ G(F) = \int Z\ dx.$$

```
02350 A(J)=A(J)+K2*L(J)*A5
02360 B(J)=B(J)+N6*L(J)*A5
02370 C(J)=C(J)+K3*L(J)*A6
02380 D(J)=D(J)+N7*L(J)*A6
02390 E(J)=E(J)+K1*L(J)*L(J)*A8
02400 F(J)=F(J)+Q6*A8
02410 G(J)=G(J)+Q6*A9
02450 NEXT J
02480 RETURN
```

The program returns to line 1680 and then to 1660, where the value of x is increased by S1 and the next values of the integrands of the various integrals are calculated. The next subroutine calls for the subroutines to calculate

$\frac{J(R2,\ R1)}{x^3}$, $J_o(x\ R8)$ and $J_1(x\ R8)$, designated $J5$, $J0$ and $J1$,

respectively. The function

$\int_{xR1}^{xR2} x\ J_1(x)dx$ is calculated by evaluating

$$\int_{o}^{xR2} x\ J_1(x)dx - \int_{o}^{xR1} x\ J_1(x)dx\ .$$

The calling subroutines are followed directly by the subroutines that perform the calculations.

```
02699 REM SUBRØUTINE FØR J5=J(R1,R2)/X↑3,J6=J(R3,R4)/X↑3
02700 R=R1
02710 GØ SUB 2900
02720 J1=Q2
02730 R=R2
02740 GØ SUB 2900
02745 J5=Q2-J1
02750 GØ SUB 2780
02760 GØ SUB 3060
02770 RETURN
02779 REM SUBRØUTINE FØR JO(X*R8)
02780 Z=X*R8
02790 IF Z>3 THEN 2830
02795 Q1=Z*Z/9
02800 Q2=((((.00021*Q1-.0039444)*Q1+.044448)*Q1-.3163866)*Q1+1.265621)*Q1
02810 JO=(Q2-2.25)*Q1+1
02820 GØ TØ 2880
02830 Q1=3/Z
02840 Q2=(((1.4476E-4*Q1-7.2805E-4)*Q1+.00137237)*Q1-9.512E-5)*Q1
02845 Q3=((Q2-.0055274)*Q1-7.7E-7)*Q1+.79788456
02850 Q2=(((1.3558*Q1-2.9333)*Q1-5.4125)*Q1*1E-4+.00262573)*Q1
02860 Q4=((Q2-3.954E-5)*Q1-.04166397)*Q1-.78539816+Z
02870 JO=Q3*CØS(Q4)/(SQR(Z))
02880 RETURN
02899 REM SUBRØUTINE FØR Q2=J(R,O)/X↑3
02900 Z=X*R
02910 IF Z>5 THEN 3000
02920 Q1=R*R*R/2
02930 Q2=Q1/3
02940 Q3=INT(2*Z)+3
02950 FØR Q=1 TØ Q3
02960 Q1=-.25*Z*Z/Q/(Q+1)*Q1
02970 Q2=Q2+Q1/(2*Q+3)
02980 NEXT Q
02990 GØ TØ 3050
03000 Q1=(((-188.1357/Z+109.1142)/Z-23.79333)/Z+2.050931)/Z
03010 Q1=((Q1-0.1730503)/Z+0.7034845)/Z-0.064109E-3
03020 Q2=(((-5.817517/Z+2.105874)/Z-0.6896196)/Z+0.4952024)/Z
03030 Q2=(Q2-0.187344E-2)/Z+0.7979095
03040 Q2=(1-SQR(Z)*(Q2*CØS(Z-P9/4)-Q1*SIN(Z-P9/4)))/(X*X*X)
03050 RETURN
03059 REM SUBRØUTINE FØR J1(X*R)
03060 Z=X*R8
03070 IF Z>3 THEN 3130
03080 Q1=Z*Z
03090 Q2=((2.1E-11*Q1-5.38E-9)*Q1+6.757E-7)*Q1-5.42443E-5
03100 Q2=((Q2*Q1+2.60415E-3)*Q1-6.25E-2)*Q1+.5
03110 J1=Z*Q2
03120 GØ TØ 3180
03130 Q1=(((-.14604057/Z+.27617679)/Z-.20210391)/Z+4.61835E-3)/Z
03140 Q1=((Q1+.14937)/Z+4.68E-6)/Z+.79788456
03150 Q2=(((-.21262014/Z+.19397232)/Z+6.022188E-2)/Z-1.7222733E-1)/Z
03160 Q2=((Q2+5.085E-4)/Z+.37498836)/Z-2.35619449+Z
03170 J1=Q1*CØS(Q2)/SQR(Z)
03180 RETURN
```

The next subroutines calculate the complex parts of the various integrands, and are probably the most complicated. They must work for a large number of metals, or equally well if the metals are not present. They must also work over the entire thickness and conductivity range of the metals without causing an overflow or underflow in the computer and still remain accurate. Following definitions used in earlier reports,[23,24] we must calculate (for the terms used in B_Z^n)

$$\frac{V_{12}(n,1)e^{-\alpha_n Z} + V_{22}(n,1)e^{\alpha_n Z}}{V_{22}(k,1)} = \frac{2^{k-n}(\beta_{n+1}\ \beta_{n+2} \cdots \beta_k)}{V'_{22}(k,1)} \times \left\{ e^{\alpha_n(Z_{n-1}-Z)}V'_{12}(n,1) + e^{-\alpha_n(Z_{n-1}-Z)}V'_{22}(n,1) \right\} . \tag{27}$$

Since both Z_{n-1} and Z are negative numbers, as shown in Fig. 3, and T_n and $Z7$ are both positive, $Z_{n-1} - Z = -(T_n - Z7)$.

The right hand size of Eq. (27) then becomes

$$\frac{2^{k-n}(\beta_{n+1}\ \beta_{n+2} \cdots \beta_k)}{V'_{22}(k,1)} \left\{ e^{-\alpha_n(T_n - Z7)}V'_{12}(n,1) + e^{\alpha_n(T_n - Z7)}V'_{22}(n,1) \right\} . \tag{28}$$

---

[23] C. C. Cheng, C. V. Dodd, and W. E. Deeds, "General Analysis of Probe Coils Near Stratified Conductors," *Int. J. Nondestr. Test.* 3(2): 109–30 (September 1971).

[24] C. V. Dodd, C. C. Cheng, W. A. Simpson, D. A. Deeds, and J. H. Smith, *The Analysis of Reflector Type Coils for Eddy-Current Testing*, ORNL-TM-4107 (April 1973).

ORNL-DWG 75-4599

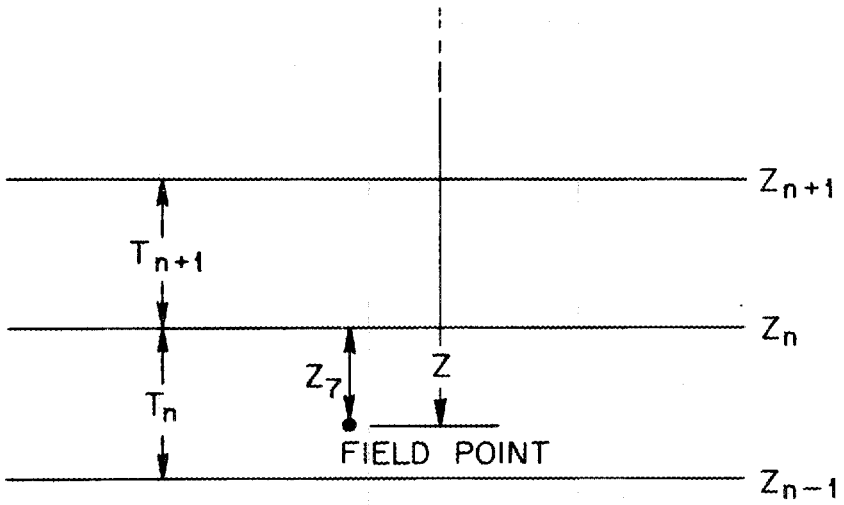

Fig. 3. Point Where Field is Calculated in nth Region.

For the terms used in B_r^n we have

$$\frac{-V_{12}(n,1)\alpha_n e^{-\alpha_n Z} + V_{22}(n,1)\alpha_n e^{\alpha_n Z}}{V_{22}(k,1)} = \frac{2^{k-n}\ (\beta_{n+1}\ \beta_{n+2}\ \cdots\ \beta_k)}{V'_{22}(n,1)}$$

$$\times \left\{ -\alpha_n e^{-\alpha_n (T_n - Z7)} V'_{12}(n,1) + \alpha_n\ e^{\alpha_n (T_n - Z7)} V'_{22}(n,1) \right\} . \tag{29}$$

For the terms used in B center and the coil impedance we have:

$$\frac{V_{12}(k,1)}{V_{22}(k,1)} = \frac{V'_{12}(k,1)}{V'_{22}(k,1)} . \tag{30}$$

The $V_{\ell 2}\ (n,1)$ are referred to as the transformation matrices between region n and region 1 and are calculated in the following manner.

For the case where we are in region 1 (the lowermost region) we have

$$V_{\ell 2}(1,1) = V'_{\ell 2}(1,1) = \begin{cases} 0 \text{ if } \ell = 1 \\ 1 \text{ if } \ell = 2 \ . \end{cases} \tag{31}$$

(1) We calculate the numerical value of the first transformation matrix as

$$V'_{\ell 2}(2,1) \equiv \left[\beta_2 + (-1)^{\ell}\beta_1\right] = t_{\ell 2}(2,1) \text{ for } \ell = 1,2 \ , \tag{32}$$

where

$$\beta_n = \frac{1}{\mu_n}\sqrt{\alpha^2 + j\omega\mu_0\mu_n\sigma_n R_5{}^2} = \frac{\alpha_n}{\mu_n} \ , \tag{33}$$

and is dimensionless. The μ_n is the relative permeability of the layer with index n, (2) then we determine the numerical value for the four elements of the transformation to the next layer. They are

$$t_{ij}(n,n-1) = \left[\beta_n + (-1)^{i+j}\beta_{n-1}\right] \exp\left[(-1)^j\alpha_{n-1}\left(z_{n-1} - z_{n-2}\right)\right] \ , \tag{34}$$

and (3) from this we shall numerically calculate:

$$V'_{12}(n,1) = t_{11}(n,n-1)V'_{12}(n-1,1) + t_{12}(n,n-1)V'_{22}(n-1,1) \ . \tag{35}$$

$$V'_{22}(n,2) = t_{21}(n,n-1)V'_{12}(n-1,1) + t_{22}(n,n-1)V'_{22}(n-1,1) \ . \tag{36}$$

Step 1 is performed for the first region. Steps 2 and 3 are repeated for $n = 3, 4 \ . \ . \ ., k$.

When we reach the region containing the field point, we must calculate the expressions (28) and (29) also. This is how the program works, except for the "special cases," which can become rather complicated. We shall therefore give their discussion along with the program steps.

```
03194 REM SUBRØUTINE FØR GAMMA FACTØR (K1,N5) AND
03196 REM FØR DEFECT PART (K2,N6)=SUM(L=1,2) ØF
03198 REM V(M,N7)L,2*EXP((-1)(L)*U(M)*BETA(M)*Z)/V(K,N7)2,2
03199 REM FØR BETA(X1,Y1)N
```

```
03200 Q1=X*X
03210 Q2=Q1*Q1
03220 Q=0
03230 N=N9
03240 M1=S(N)
03250 U1=U(N)
03260 GØ SUB 5000
```

The program has started at the uppermost region and is calculating $B_n = X(N) + j\ Y(N)$. The program steps downward through the layers of conductors to determine the lowermost region of practical interest and sets this region as region 1 ($N7$ in program). This occurs when $\sum_i \alpha_i T_i > 20$. Regions lower than $N7$ have no effect on the answers and can be neglected.

```
03270 X(N)=X1
03280 Y(N)=Y1
03290 Q=Q+X1*U1*T(N)
03300 IF Q>20 THEN 3340
03310 IF N=1 THEN 3340
03320 N=N-1
03330 GØ TØ 3240
03340 N7=N
```

The program calculates the transformation between regions 1 and 2, $V'_{\ell,2}(2,1)$, as given in Eq. (32). The program sets $V'_{1,2}(2,1) = V3 + j\ V4$ and $V'_{2,2}(2,1) = V7 + j\ V8$. β_{n-1} is set equal to B_n in preparation for calculating the transformation to the next region. The program checks to see if the region containing the magnetic field point ($N8$) has been reached. If it has, it transfers to line 3510 for special handling. If it has not reached the field region, it progresses up through the conductor until the field region is reached. Subroutine 5300 calculates the transformation elements, $t_{ij}(n,n-1)$ given in Eq. (34), and subroutine 5580 calculates $V'_{i,2}(n,1)$ given in Eqs. (35) and (36). After each calculation, β_{n-1} is set equal to β_n in preparation for the next transformation.

```
03350 REM FØR GAMMA FACTØR
03360 V3=X(N+1)-X(N)
03370 V4=Y(N+1)-Y(N)
03380 V7=X(N+1)+X(N)
03390 V8=Y(N+1)+Y(N)
03400 X0=X(N+1)
03410 Y0=Y(N+1)
03420 IF N8<N7+2 THEN 3510
03430 FØR N=N7+2 TØ N8
03440 X1=X(N)
03450 Y1=Y(N)
```

```
03460 GØ SUB 5300
03470 GØ SUB 5580
03480 X0=X1
03490 Y0=Y1
03500 NEXT N
```

Statement 3510 transfers around if *N7* (the lowermost region of interest) is equal to or above the *N8* (field point) region.

```
03510 IF N8<N7+1 THEN 3600
```

The program next calculates $e^{-\alpha_n(T_n - Z7)} = (Q_1 - j\ Q_2)/Q6$ in subroutine 5710. The program then calculates

$$V1 + j\ V2 = \left\{ e^{-\alpha_n(T_n - Z7)} V'_{12}(n,1) + e^{\alpha_n(T_n - Z7)} V'_{22}(n,1) \right\}, \tag{37}$$

and

$$U7 + j\ U8 = \left\{ -\alpha_n e^{-\alpha_n(T_n - Z7)} V'_{12}(n,1) + \alpha_n e^{\alpha_n(T_n - Z7)} V'_{22}(n,1) \right\}. \tag{38}$$

```
03520 N=N8
03530 T9=T(N)-Z7
03540 GØ SUB 5710
03542 Q3=(V3*Q1+V4*Q2)/Q6
03544 Q4=(V7*Q1-V8*Q2)*Q6
03546 Q7=(V4*Q1-V3*Q2)/Q6
03548 Q8=(V8*Q1+V7*Q2)*Q6
03550 V1=Q3+Q4
03560 V2=Q7+Q8
03563 U7=U(N)*(X(N)*(Q4-Q3)-Y(N)*(Q8-Q7))
03565 U8=U(N)*(X(N)*(Q8-Q7)+Y(N)*(Q4-Q3))
```

The program checks to see if the lowermost region of interest, *N7*, is one region below the field region, *N8*, equal to *N8*, or above *N8*. If so, the program transfers to 3680, which continues the transformations on to the coil region. If not, *N7* is set equal to *N8-1* (one region below the field region) and then transfers to 3680.

```
03570 IF N8<N7+2 THEN 3590
03580 N7=N8-1
03590 GØ TØ 3680
```

For the special case where $N7 = N8$, the equations used in the calculation of B_Z^n and B_r^n become

$$\frac{V_{22}(1,1)e^{\alpha_1 Z}}{V_{22}(k,1)} = \frac{2^{k-1}(\beta_2\ \beta_3\ \cdots\ \beta_k)e^{-\alpha_1 Z7}}{V'_{22}(k,1)} \tag{39}$$

and

$$\frac{\alpha_1 V_{22}(1,1)e^{\alpha_1 Z}}{V_{22}(k,1)} = \frac{2^{k-1}(\beta_2\ \beta_3\ \cdots\ \beta_k)\alpha_1 e^{-\alpha_1 Z7}}{V'_{22}(k,1)}\ . \tag{40}$$

These are calculated for the first and second regions from lines 3610 to 3645. Then the program transfers to 3680 to continue the calculation until the coil region is reached.

```
03600 IF N8<N7 THEN 3660
03610 T9=Z7
03620 GØ SUB 5710
03630 V1=2*(X(N+1)*Q1+Y(N+1)*Q2)/Q6
03640 V2=2*(Y(N+1)*Q1-X(N+1)*Q2)/Q6
03642 U7=U(N)*(X(N)*V1-Y(N)*V2)
03645 U8=U(N)*(X(N)*V2+Y(N)*V1)
03650 GØ TØ 3680
```

For the case where $N7$ is above $N8$, the B_r and B_Z components are set equal to zero since they will have no significant contribution.

```
03660 V1=V2=0
03665 U7=U8=0
```

The program continues from the $N8 + 1$ layer until the kth ($N9$) is reached. The transformation subroutine for the calculation of the $V_{\ell,2}(n,1)$ is entered at an earlier point, and $2\ \beta_n$ is multiplied by the

value for the B_Z^n and B_r^n. This multiplies Eqs. (37) and (38) by $2^{k-n}(\beta_n \beta_{n+1} \cdot \cdot \cdot \beta_k)$.

```
03670 REM V(N8+1,N9)
03680 FØR N=N7+2 TØ N9
03690 X1=X(N)
03700 Y1=Y(N)
03710 GØ SUB 5300
03720 GØ SUB 5500
03730 X0=X1
03740 Y0=Y1
03750 NEXT N
```

The components are now divided by $V_{22}(k,1)$, in a manner to reduce the tendency to overflow.

$$K1 + j\ K5 = \frac{V_{12}(k,1)}{V_{22}(k,1)},$$

$$K2 + j\ N6 = B_Z^n \text{ component in Eq. (27)},$$

$$K3 + j\ N7 = B_r^n \text{ component in Eq. (28)}.$$

```
03760 V9=V7/V8+V8/V7
03770 K1=(V3/V8+V4/V7)/V9
03780 N5=(V4/V8-V3/V7)/V9
03790 K2=(V1/V8+V2/V7)/V9
03800 N6=(V2/V8-V1/V7)/V9
03803 K3=(U7/V8+U8/V7)/V9
03804 N7=(U8/V8-U7/V7)/V9
03810 RETURN
```

This subroutine calculates β_n. If the factor $\bar{r}^2\omega\mu\sigma$ is less than 10^{-9}, the program sets the resistivity equal to infinity, and makes a simplified calculation.

```
04999 REM SUBRØUTINE FØR BETA(X1,Y1)
05000 IF M1<1E-9 THEN 5050
05010 Q3=SQR(Q2+M1*M1)
05020 X1=.707106781*SQR(Q3+Q1)/U1
05030 Y1=M1/(2*X1*U1*U1)
```

```
05040 GØ TØ 5070
05050 X1=X/U1
05060 Y1=0
05070 RETURN
```

This subroutine calculates the transformation matrices as given in Eq. (34). The matrices are named in the program as

$$T_{11}(n,n-1) = T1 + j\ T2,$$

$$T_{12}(n,n-1) = T3 + j\ T4,$$

$$T_{21}(n,n-1) = T5 + j\ T6,$$

$$T_{22}(n,n-1) = T7 + j\ T8.$$

```
05299 REM SUBRØUTINE FØR XFØRMATIØM MATRIX T
05300 Q2=X1+X0
05310 Q1=X1-X0
05320 Q4=Y1+Y0
05330 Q3=Y1-Y0
05340 Q5=U(N-1)*T(N-1)
05350 Q6=EXP(Q5*X0)
05360 Q7=CØS(Q5*Y0)
05370 Q8=SIN(Q5*Y0)
05380 T1=(Q2*Q7+Q4*Q8)/Q6
05390 T2=(Q4*Q7-Q2*Q8)/Q6
05400 T3=(Q1*Q7-Q3*Q8)*Q6
05410 T4=(Q3*Q7+Q1*Q8)*Q6
05420 T5=(Q1*Q7+Q3*Q8)/Q6
05430 T6=(Q3*Q7-Q1*Q8)/Q6
05440 T7=(Q2*Q7-Q4*Q8)*Q6
05450 T8=(Q4*Q7+Q2*Q8)*Q6
05460 RETURN
```

The next subroutine calculates the transformation matrices given in Eqs. (35) and (36). In addition, the factors in Eqs. (37) and (38) [or the appropriate part of the numerators of Eqs. (39) and (40) if $N7 = N8$] are multiplied by $2\ \beta_n$. These factors are defined as $V1 + j\ V2$ for the B_Z^n part and $U7 + j\ U8$ for the B_r^n part. The transformation matrices are named in the program as

$$V'_{12}(n,1) = V3 + j\ V4,$$

$$V'_{22}(n,1) = V7 + j\ V8.$$

```
05499 REM SUBRØUTINE FØR XFØRMATIØN MATRIX V
05500 Q1=V1
05510 Q2=V2
05520 V1=(Q1*X1-Q2*Y1)*2
05530 V2=(Q1*Y1+Q2*X1)*2
05540 Q1=U7
05550 Q2=U8
05560 U7=(Q1*X1-Q2*Y1)*2
05570 U8=(Q1*Y1+Q2*X1)*2
05580 Q3=V3
05590 Q4=V4
05600 Q7=V7
05610 Q8=V8
05620 V3=T1*Q3-T2*Q4+T3*Q7-T4*Q8
05630 V4=T2*Q3+T1*Q4+T4*Q7+T3*Q8
05640 V7=T5*Q3-T6*Q4+T7*Q7-T8*Q8
05650 V8=T6*Q3+T5*Q4+T8*Q7+T7*Q8
05660 RETURN
```

The next subroutine is used to break a complex exponential into its real and imaginary parts.

```
05700 REM SUBRØUTINE FØR COMPLEX EXPØNENTIAL
05710 CO=U(N)*T9
05720 Q6=EXP(CO*X(N))
05730 Q1=COS(CO*Y(N))
05740 Q2=SIN(CO*Y(N))
05750 RETURN
```

The next subroutine is used to print out the results after the integral has converged. The constants in front of the magnetic field integrals [Eqs. (6), (7), and (8)] are calculated as *Q1*, and the constants in front of the power integral [Eq. (10)] are collected as *Q3*. The constant, *Q2*, is used to calculate $|\beta_Z$ (center)$|$ without the *Q1* factors out front. This is used in the calculation of the ratio of the absolute values of the fields.

```
06000 Q1=N3*I9*P9*2E-7/((R2-R1)*L3*R5)
06003 Q3=-I9*I9*N3*N3*F*P9*P9*P9*R5*8E-7/((R2-R1)↑2*L3*L3*2)
06005 PRINT"LIFT-ØFF","RL B(Z)","IM B(Z)","RL B(R)","IM B(R)"
06007PRINT"E.C. PWR","RL B(CENTER","IM B(CENTER)","IB(Z)I/IB(C)I",
```

```
06008 PRINT"IB(R)I/IB(C)I"
06010 FØR J=1TØ5
06015 Q2=SQR((E(J)+A3)↑2+F(J)*F(J))
06020 PRINT(L2*(J-1)+L6)*RS,Q1*A(J),Q1*B(J),Q1*C(J),Q1*D(J)
06030 PRINTQ3*G(J),Q1*(E(J)+A3),Q1*F(J),SQR(A(J)↑2+B(J)↑2)/Q2,
06035 PRINT SQR(C(J)↑2+D(J)↑2)/Q2
06039 PRINT
06040 NEXT J
06050 RETURN
09900 END
```

A sample run of the program now follows. The first table in the printout gives the parameters for the various regions, starting with the furthermost region from the coil. Next the coil and driving current parameters and the location of the field point are given. The next table shows how the integrals converge as a function of α. After convergence, the complex values of B_r, B_Z and B center, along with the ratio of the magnitude of B_r and B_Z to B center are printed for each value of coil to conductor spacing (lift-off). Also, the eddy-current power is given.

The program, as now written, is extremely versatile, but at the expense of running time. The running time may be shortened considerably by (1) writing a subroutine to calculate the specific complex functions used in the particular problem and (2) omitting the variation in the lift-off. Programs that have incorporated these two features have running times about one-fourth of the time of the general program.

VERIFICATION AND TESTING OF THE PROGRAM

The program has been tested and verified by several different methods. These include comparison to some experimental measurements performed by A. Philippe,[25] and some independent calculations performed by K. Kawashima. Additional verification is obtained by assuming the conductor is a perfect conductor and making a calculation using two coils. Also, the calculations can be compared to eddy-current calculations made for nondestructive tests in some cases. The comparison between our results and those of A. Philippe and K. Kawashima is shown in Table 2. Note that no measurements or comparisons were made of the B_r component.

---

[25] A. Philippe, *Controle Non Destructif Par Courants De Foucault*, EUR 4284 f, 1969.

N	THICK(METERS)	R(MU-OHM CM)	M, SIGMA	U PERM
1	1.00000E+10	1.00000E+10	0	1
2	0.01	0.01	336.283	1
3	1	1.00000E+10	0	1

R1= 3.17500E-2 R2= 5.08000E-2 DRIVER LENGTH = 1.77800E-2

COIL MEAN RADIUS 0.041275 METERS FREQUENCY 2.5

MIN LIFT-OFF= 0.0005 LIFT-OFF INCREMENT= 2.50000E-4

100 TURNS, EACH CARRYING 338.709 AMPS

MAG. FIELD AT R= 0.041275 Z= 0 METERS BELOW SURFACE OF COND. 1

ALPHA	ABS SUM OF FLDS	LAST CHANGE	RATIO
5.	0.175657	3.07274E-4	0.374641
10.	0.158177	6.05338E-6	3.32695E-3
15.	0.156863	1.20728E-5	3.34808E-3
20.	0.156903	2.03498E-6	6.43486E-4
25.	0.156886	3.20637E-7	1.02188E-4
30.	0.156886	7.47734E-8	2.38305E-5
35.	0.156885	1.76169E-8	2.80730E-6
40.	0.156885	2.17937E-9	3.47289E-7

INTEGRAL HAS CONVERGED

LIFT-OFF	RL B(Z)	IM B(Z)	RL B(R)	IM B(R)
E.C. PWR	RL B(CENTER	IM B(CENTER)	IB(Z)I/IB(C)I	IB(R)I/IB(C)I
0.0005	-2.51581E-3	1.31248E-3	-1.08703E-2	4.54817E-3
52.9059	0.153753	-3.41266E-2	1.74750E-2	7.25669E-2
0.00075	-2.46143E-3	1.30174E-3	-1.05813E-2	4.46242E-3
51.4301	0.164131	-3.40235E-2	1.66117E-2	6.85109E-2
0.001	-2.40907E-3	1.29099E-3	-1.03020E-2	4.37950E-3
50.0104	0.169488	-3.38934E-2	1.58131E-2	6.47654E-2
0.00125	-2.35866E-3	1.28022E-3	-1.00320E-2	4.29920E-3
48.6438	0.17482	-3.37378E-2	1.50731E-2	6.13012E-2
0.0015	-2.31010E-3	1.26946E-3	-9.77100E-3	4.22137E-3
47.3276	0.180124	-3.35581E-2	1.43864E-2	5.80923E-2

Table 2. Comparison of ORNL Results to Experimental Measurements by A. Philippe and Calculations by K. Kawashima

r, (mm)	B_Z in Teslas at 0.0175 m below the coil		
	A. Philippe (read from graph)	K. Kawashima	ORNL MAGFLD Program
0	8.61×10^{-5}	9.04744×10^{-5}	9.04770×10^{-5}
3	8.21	8.73289	8.7332
9	6.19	6.60743	6.60817
18	2.71	2.79462	2.79530
30	0.525	0.65125	0.65141

The coil and conductor parameters used by A. Philippe are given below in MKS units.

Radius, m	
Inner	0.009
Outer	0.0095
Lift-off, m	0.000
Coil length, m	0.037
Frequency, Hz	264
Current, A	1
Turns	62
Conductor thickness, m	0.0087
Resistivity μΩ-cm	20.833
Relative Permeability	1.00

In the calculations by Kawashima, the coil was assumed to have no thickness, which may account for the slight differences in the calculations.

Calculations were also made assuming that the conductor was perfect and that it could be replaced by an image coil. For the field along the axis of a coil, a distance L from the coil face, we have:

$$B_Z = \frac{\mu_o NI}{2(R_2 - R_1)L_3} \left\{ (L + L_3)\, \ln\left(\frac{R_2 + \sqrt{R_2^2 + (L + L_3)^2}}{R_1 + \sqrt{R_1^2 + (L + L_3)^2}} \right) - L \ln\left(\frac{R_2 + \sqrt{R_2^2 + L^2}}{R_1 + \sqrt{R_1^2 + L^2}} \right) \right\} .$$

Evaluating the field at the center of the coil and subtracting the field at a point L_3 gives $B_Z = 0.51224 - 0.38753 = 0.12471$ for a perfect reflector. $B_Z = 0.15875$ for the imperfect conductor used in the sample calculations.

In the calculation of the power we have 52.906 W calculated in the program compared to 52.912 calculated by a separate eddy-current program for coil impedance, which has been experimentally verified to within about 0.5%.

The calculation of B_Z (center) for the coil in air, Eq. (11), agrees with the value calculated by the exact formula, Eq. (12), to within a few parts per million. However, Eq. (11) must be numerically integrated from 0 to 34,000 before it converges.

SUMMARY, CONCLUSIONS, AND RECOMMENDATIONS

The program, in its present state, is accurate and versatile. While some experimental confirmations have been made, we need measurements on the B_r components. The program can be extended to calculate the eddy-current density, heating density and force density for a lattice of points. Further extensions would allow the synthesis of pulses by Fourier techniques. It is recommended that the program be specialized to fewer conductors and converted to Fortran for these extensions. The derived equations show how the various parameters calculated can be scaled in terms of size, current, turns and frequency. Thus, experimental results from small-scale models can be extended to full-size apparatus.

ACKNOWLEDGMENTS

The authors would like to express their appreciation to H. T. Yeh, W. A. Simpson, K. Kawashima, and R. W. McClung for their review of this report and their many helpful suggestions. They would also like to express their gratitude to Linda Croff and Stephanie Davison for the typing and preparation of this report.

INTERNAL DISTRIBUTION

(3) Central Research Library
ORNL - Y-12 Technical Library
Document Reference Section
(10) Laboratory Records Department
Laboratory Records, ORNL RC
ORNL Patent Office
Thermonuclear Library
G. M. Adamson, Jr.
J. K. Ballou
R. J. Beaver
R. L. Brown
P. Burn
G. W. Clark
J. F. Clarke
R. J. Colchin
J. E. Coulter (Y-12)
J. A. Cox
F. L. Culler
J. E. Cunningham
R. W. Derby
(20) C. V. Dodd
G. W. Donaldson
L. Dresner
D. S. Easton
W. A. Fietz
A. P. Fraas
K. F. Froelich
J. W. Garber (K-25)
W. H. Gray
W. H. Hall (K-25)
W. O. Harms
G. R. Hicks
(3) M. R. Hill
G. G. Kelley
R. W. Knight
C. C. Koch
C. G. Lawson
C. J. Long
H. M. Long
P. J. Long (Y-12)
M. S. Lubell
J. N. Luton
F. B. Marcus
D. L. Mason (Y-12)
D. G. McAlees
R. W. McClung
R. V. McCord
R. E. McDonald
J. R. Miller
A. R. Moazed
J. R. Moore
O. B. Morgan
F. D. Mundt (K-25)
P. Patriarca
J. W. Pearce
H. Postma
M. Roberts
M. W. Rosenthal
W. D. Ross (Y-12)
R. E. Schwall
H. C. Schweinler
J. L. Scott
S. S. Shen
J. E. Simpkins
W. A. Simpson
G. M. Slaughter
D. Steiner
W.C.T. Stoddart
J. H. Smith
D. B. Trauger
P. L. Walstrom
J. R. Weir
F. W. Wiffen
H. T. Yeh
John Moteff (consultant)
Hayne Palmour III (consultant)
J. W. Prados (consultant)
N. E. Promisel (consultant)
G. V. Smith (consultant)
D. F. Stein (consultant)

EXTERNAL DISTRIBUTION

AEROJET NUCLEAR CORP., P.O. Box 1845, Idaho Falls, ID 83401

F. L. Crestridge, ARA-3
Tom Piper
Ned Wilde

AIR FORCE KELLY AIR FORCE BASE, Kelly Air Force Base, TX 78241

Bernard Boisvert, SAAMA/MMEW

AIR FORCE KIRTLAND AIR FORCE BASE, Kirtland Air Force Base, NM 87117

C. E. Baum

AIR FORCE MATERIALS LABORATORY, Wright-Patterson Air Force Base, OH 45433

R. R. Rowland

AIR FORCE ROBBINS AIR FORCE BASE, Robbins Air Force Base, GA 31093

R. W. Bailey, Jr., WRAMA/MMETM

ARGONNE NATIONAL LABORATORY, 9700 Cass Avenue, Argonne, IL 60439

C. J. Renken

ARMY EDGEWOOD ARSENAL, Edgewood Arsenal, MD 21010

Ronald Frailer, Physical Laboratory Branch,
Inspection Operations Division

ARMY MATERIALS AND MECHANICS RESEARCH CENTER, Watertown, MA 02172

R. C. Grubinskas
C. P. Merhib, Nondestructive Information Analysis Center

ARMY REDSTONE ARSENAL, Redstone Arsenal, AL 35809

W. B. Treplett, AMSMI-QLC, Bldg. 4500

ATOMIC ENERGY OF CANADA, LTD., Chalk River, Ontario, Canada

V. S. Cecco
J. W. Hilborn
E. G. Dahlin

BABCOCK & WILCOX, P.O. Box 1260, Lynchburg, VA 24505

W. E. Lawrie

BATTELLE MEMORIAL INSTITUTE, 505 King Avenue, Columbus, OH 43201

J. H. Flora

BMI-PACIFIC NORTHWEST LABORATORY, P.O. Box 999, Richland, WA 99352

D. L. Lessor
H. L. Libby

DOW CHEMICAL COMPANY, P.O. Box 888, Golden, CO 80401

Dave Chamberlain, Nondestructive Testing Department
G. D. Lassahn

E. I. DU PONT DE NEMOURS COMPANY, Savannah River Laboratory, Aiken, SC 29801

Dan Clayton

GENERAL ELECTRIC, 175 Cortner Ave., San Jose, CA 95125

D. L. Fischer, M/C 164

GENERAL ELECTRIC, Route I-75, Maildrop E-45, Evendale, OH 45215

R. F. Feldman

HANFORD ENGINEERING DEVELOPMENT LABORATORY, P.O. Box 1970, Richland, WA 99352

R. L. Brown, Jr.

INSTITUTE OF NUCLEAR ENERGY RESEARCH, P.O. Box 3, Lung-Tan, Taiwan, Republic of China

Chwen Fu Huang

KNOLLS ATOMIC POWER LABORATORY, P.O. Box 1072, Schenectady, NY 12301

Don Gavin

LAWRENCE LIVERMORE LABORATORY, P.O. Box 808, Livermore, CA 94550

J. W. Sully

LOCKHEED MISSILES AND SPACE COMPANY, P.O. Box 504, Sunnyvale, CA 94088

A. J. Glispin, Department 84-35

LOS ALAMOS SCIENTIFIC LABORATORY, P.O. Box 1663, Los Alamos, NM 87544

D. Elliott

G. C. MARSHALL SPACE FLIGHT CENTER, Marshall Center, AL 35812

L. H. Burdette, MSFC-S&E-QUAL-QT
M. C. McIlwain, R-QUAL-ARA
F. M. Saxton, S&E-ASTR-1R

NASA-LEWIS RESEARCH CENTER, 21000 Brookpark Road, Cleveland, OH 44135

Alex Vary

NAVAL AIR DEVELOPMENT CENTER, Johnsville, Warminster, PA 18974

John Carlyle, MAMM-14

NAVAL SHIP ENGINEERING CENTER, Hyattsville, MD 20782

John Gleim

SANDIA CORPORATION, Division 7361, P.O. Box 5800, Albuquerque, NM 87115

R. A. Baker
D. W. Ballard

SANDIA CORPORATION, P.O. Box 969, Livermore, CA 94550

Dennis Rathbun

SOUTHWEST RESEARCH INSTITUTE, P.O. Drawer 28510, San Antonio, TX 78228

B. R. Wilson

UNITED KINGDOM ATOMIC ENERGY RESEARCH ESTABLISHMENT, Didcot, Berkshire, England

R. S. Sharpe

UNIVERSITY OF MICHIGAN, 2317 East Engineering Bldg., Ann Arbor, MI 48104

J. R. Frederick, Department of Electrical Engineering

UNIVERSITY OF MISSOURI, Colubmia, MO 65201

D. L. Waidelich, Department of Electrical Engineering

UNIVERSITY OF TENNESSEE, Knoxville, TN 37916

W. E. Deeds, Department of Physics
J. F. Pierce, Department of Electrical Engineering
J. O. Thompson, Department of Physics

WESTINGHOUSE RESEARCH AND DEVELOPMENT, Beulah, Road, Pittsburgh, PA 15235

J. K. White

USERDA, DIVISION OF REACTOR DEVELOPMENT AND TECHNOLOGY, Washington, DC 20545

Gene Hoffman

USERDA, OPERATIONS OFFICE, P.O. Box E, Oak Ridge, TN 37830

Research and Technical Support Division
Director, Reactor Division

USERDA, TECHNICAL INFORMATION CENTER, OFFICE OF INFORMATION, P.O. Box 62, Oak Ridge, TN 37830

(2) Manager