OAK RIDGE NATIONAL LABORATORY LIBRARIES

3 4456 0550849 3

ORNL-TM-5059

Cy 1

Characterization of Effluents from a High-Temperature Gas-Cooled Reactor Fuel Refabrication Plant

M. S. Judd
R. A. Bradley
A. R. Olsen

OAK RIDGE NATIONAL LABORATORY
CENTRAL RESEARCH LIBRARY
DOCUMENT COLLECTION
LIBRARY LOAN COPY
DO NOT TRANSFER TO ANOTHER PERSON
If you wish someone else to see this document, send in name with document and the library will arrange a loan.

UCN-7969
(3-67)

OAK RIDGE NATIONAL LABORATORY
OPERATED BY UNION CARBIDE CORPORATION • FOR THE U.S. ATOMIC ENERGY COMMISSION

Printed in the United States of America. Available from
National Technical Information Service
U.S. Department of Commerce
5285 Port Royal Road, Springfield, Virginia 22161
Price: Printed Copy $5.50; Microfiche $2.25

This report was prepared as an account of work sponsored by the United States Government. Neither the United States nor the Energy Research and Development Administration, nor any of their employees, nor any of their contractors, subcontractors, or their employees, makes any warranty, express or implied, or assumes any legal liability or responsibility for the accuracy, completeness or usefulness of any information, apparatus, product or process disclosed, or represents that its use would not infringe privately owned rights.

ORNL-TM-5059
UC-77 (Gas-Cooled
Reactor Technology)

Contract No. W-7405-eng-26

METALS AND CERAMICS DIVISION

CHARACTERIZATION OF EFFLUENTS FROM A HIGH-TEMPERATURE GAS-COOLED REACTOR FUEL REFABRICATION PLANT

M. S. Judd, R. A. Bradley, and A. R. Olsen

DECEMBER 1975

NOTICE This document contains information of a preliminary nature and was prepared primarily for internal use at the Oak Ridge National Laboratory. It is subject to revision or correction and therefore does not represent a final report.

OAK RIDGE NATIONAL LABORATORY
Oak Ridge, Tennessee 37830
operated by
UNION CARBIDE CORPORATION
for the
U.S. ENERGY RESEARCH AND DEVELOPMENT ADMINISTRATION

OAK RIDGE NATIONAL LABORATORY LIBRARIES

3 4456 0550849 3

CONTENTS

ABSTRACT 1
INTRODUCTION 1
BASIC ASSUMPTIONS 2
PROCESS DESCRIPTION 6
Resin Fuel Kernel Preparation 6
Effluents from Resin Fuel Kernel Preparation 8
Resin Fuel Kernel Carbonization 8
Effluents from Resin Fuel Kernel Carbonization 10
Resin Conversion and Microsphere Coating Process 12
Effluents from Resin Conversion and Microsphere Coating 14
Fuel Rod Fabrication 14
Effluents from Fuel Rod Fabrication 18
Fuel Element Assembly 18
Effluents from Fuel Element Assembly 20
Scrap Recovery 22
Effluents from Scrap Recovery 23
CENTRAL EFFLUENT TREATMENT SYSTEM 27
Perchloroethylene Reclamation System 28
Burnable Contaminated Waste Treatment 29
Nonburnable Contaminated Waste Treatment 33
Liquid Waste Treatment 35
Cooling Systems 36
Off-Gas Cleanup System 39
EFFLUENT SUMMARY 42
Recovered Scrap Material 42
Solid Waste Material 43
Gaseous Effluents 43
Thermal Effluents 43
CONCLUSIONS AND RECOMMENDATIONS 45
Process Rejection Rates 45
Furnace Off-Gas Characterization 45
Scrap Recovery 45

Perchloroethylene Reclamation 45
Burnable Contaminated Waste Treatment 45
ACKNOWLEDGMENTS 46
APPENDIX 47

CHARACTERIZATION OF EFFLUENTS FROM A HIGH-TEMPERATURE GAS-COOLED REACTOR FUEL REFABRICATION PLANT

M. S. Judd, R. A. Bradley, and A. R. Olsen

ABSTRACT

The types and quantities of chemical and radioactive effluents that would be released from a reference fuel refabrication facility for the High-Temperature Gas-Cooled Reactor (HTGR) have been determined. This information will be used to predict the impact of such a facility on the environment, to identify areas where additional development work needs to be done to further identify and quantify effluent streams, and to limit effluent release to the environment.

INTRODUCTION

As part of the Thorium Utilization Program we have been studying the overall fuel cycle for High-Temperature Gas-Cooled Reactors. This report covers one phase of this study.

This phase was directed at reviewing the entire operations of a commercial-scale recycle fuel refabrication plant. The objectives were primarily to establish the types and amounts of effluents that would derive from such a plant and secondarily, to define those process areas where confirmatory research and development are needed. The assumed processes have all been shown to be technically feasible and in most cases have been developed to the stage where scale-up to full-size equipment is the next logical stage of development.

The assumptions of reject rates and effluent compositions are all based on currently available data and conservative engineering extrapolations or estimates. The results are presented in such a fashion that they can easily be scaled to a different throughput or production rate. Properly scaled, the effluent information could be coupled with similar information from the required adjacent HTGR fuel reprocessing plant to provide source terms for an assessment of the effects of such a plant on the environment.

BASIC ASSUMPTIONS

Recycle fuel fabrication is that portion of the HTGR fuel cycle in which uranium recovered from spent fuel elements at a reprocessing plant is fabricated into fuel and incorporated into recycle fuel elements. Two types of uranium will be fabricated at the recycle fabrication plant: that containing the residual ^{235}U recovered from the fissile particles in fresh fuel elements and that containing the ^{233}U bred from ^{232}Th in the fertile particles. These two types of uranium will be separated at the reprocessing plant by mechanical separation of the fissile and fertile particles, and will be supplied as separate feed streams to the recycle fuel fabrication plant. It is expected that the ^{235}U-type fuel will be stored as waste after its second burn in the reactor. Therefore, only once-burned ^{235}U fuel will be fabricated in the fuel refabrication plant. A refabricated fuel element will contain only one type of uranium: either residual ^{235}U or bred ^{233}U, to facilitate separation of the twice-burned ^{235}U in the reprocessing plant. The nomenclature used to describe the recycle fuel elements is as follows: 23R elements — elements using ^{233}U as the fissile component; 25R elements — elements using recycle ^{235}U as the fissile component.

The processing steps necessary to incorporate the recovered uranium into a fuel element suitable for use in an operating HTGR are illustrated in Fig. 1. The fissile ^{233}U and ^{235}U are received from the reprocessing

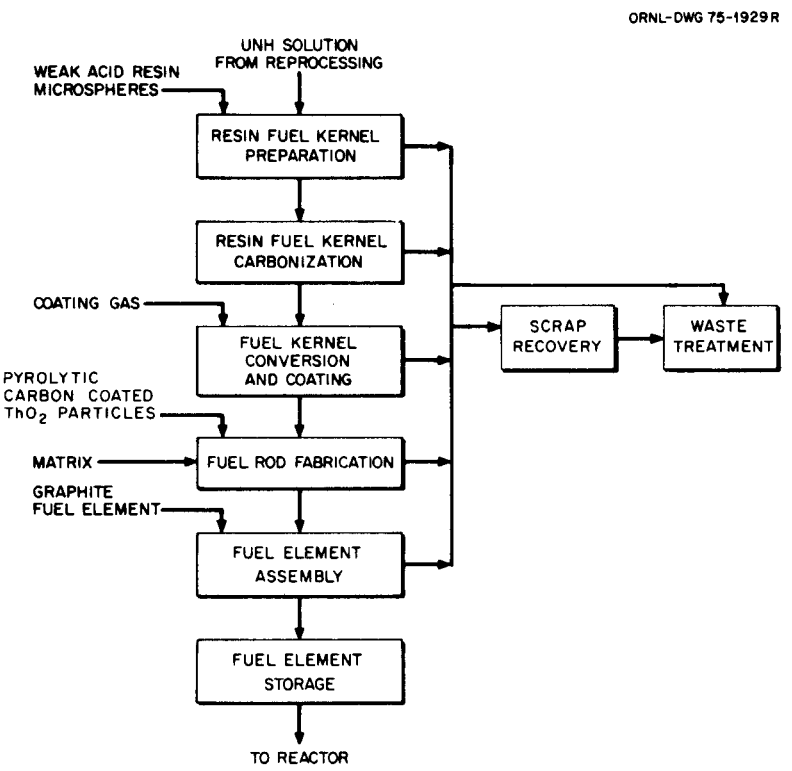

Fig. 1. Process for HTGR Recycle Fabrication.

plant as uranyl nitrate solutions.[1] The uranyl nitrate solution is converted to an acid-deficient uranyl nitrate solution and loaded onto resin microspheres by ion exchange. The loaded resin microspheres are carbonized and converted to uranium oxide-carbide kernels and then coated with multiple layers of pyrolytic carbon and SiC. In fuel rod fabrication, pyrolytic-carbon-coated ThO_2 particles obtained from a fresh-fuel fabrication plant are blended with the coated recycle uranium particles and combined with a carbonaceous matrix.

The fuel rods, 5/8 in. diam and 2 1/2 in. long (16 by 64 mm), are loaded into hexagonal graphite fuel elements, which are approximately 31 in. high and 14 in. across the flats (0.79 by 0.36 m). The fuel elements are heated to carbonize and anneal the fuel rods and then loaded with poison rods, end plugs, and dowels. After the finished elements are inspected and packaged, they are stored until they are shipped to an operating HTGR. Process rejects are processed in the scrap recovery system to reclaim the uranium. The recovered uranium is sent to the fuel reprocessing plant for additional processing.

For the purpose of this study, an HTGR recycle fuel fabrication plant with a capacity of about 0.9 metric ton heavy metal per day has been assumed. Such a plant would produce fuel elements containing 84.4 kg U/day, with about 64.95 kg entering ^{233}U recycle fuel elements and 19.5 kg entering ^{235}U recycle fuel elements. The average isotopic compositions of the two types of uranium entering the recycle fuel fabrication plant are given in Table 1. The plant will also handle 0.815 metric tons per day of natural thorium. A plant with this capacity will supply the recycle fuel requirements for forty-five 1160-MW(e) reactors.

---

[1]At this time, the most logical method of fuel recycle is to have the reprocessing and refabrication plants built on the same site. This will greatly facilitate transportation of recovered uranium, and it will enable both plant to partially share effluent treatment systems, analytical laboratories, maintenance shops, and administrative functions.

Table 1. Isotopic Compositions of Uranium Streams

Isotope	Content, wt %	
	23R	25R
^{232}U	0.04	
^{233}U	61.76	
^{234}U	23.70	1.40
^{235}U	9.00	39.70
^{236}U	5.50	44.70
^{238}U		14.20

The fuel loadings used in this study are based on information supplied by General Atomic Company.[2] The average fuel loadings are 0.742 and 8.83 kg of uranium and thorium, respectively, per 23R fuel element and 3.25 and 7.00 kg, respectively, per 25R fuel element. Each fuel element contains 1566 fuel rods. These fuel loadings imply that the refabrication plant described in this study will produce an average of 87.5 23R fuel elements and six 25R fuel elements daily. Operating 80% of the time, 292 days per year, such a plant would produce 25,550 23R fuel elements and 1752 25R fuel elements annually.

Although one day's production of fuel elements will contain 84.4 kg of uranium, the individual processing steps will process more uranium to allow for process rejections. The assumed fraction lost and the quantities of uranium that must be processed in each step to produce elements containing 84.4 kg of uranium are given in Table 2.

The refabrication of HTGR fuel elements will require a shielded facility because of the radioactivity of the bred ^{233}U fissile material. Most of the radioactivity associated with ^{233}U fuel is due to the inclusion of trace amounts of ^{232}U. The ^{232}U isotope is produced in the reactor environment by neutron reactions with ^{232}Th, ^{230}Th, and ^{233}U. Figure 2 shows the primary production modes for ^{232}U and the ^{232}U decay scheme.[3]

---

[2]General Atomic Company, *Conceptual Design Summary and Design Qualifications for HTGR Target Recycle Plant*, GA-A13365 (in preparation).

[3]J. E. Rushton, J. D. Jenkins, and S. R. McNeany, "Nondestructive Assay Techniques for Recycled ^{233}U Fuel for High-Temperature Gas-Cooled Reactors," *Nucl. Mater. Manage.* 4(1): 18–34 (Spring 1975).

Table 2. Process Requirements

Process	Fraction Lost	Gross Production Requirements, kg			Percent of Final Product
		23R	25R	Total	
Resin fuel kernel preparation	0.071	92.82	27.82	120.64	142.9
Resin fuel kernel carbonization	0.060	86.23	25.85	112.08	132.8
Fuel kernel conversion and coating	0.174	81.05	24.30	105.35	124.8
Fuel rod fabrication	0.020	66.94	20.07	87.01	103.1
Fuel element carbonization	0.010	65.61	19.67	85.28	101.0
Fuel element storage		64.95	19.47	84.42	100.0

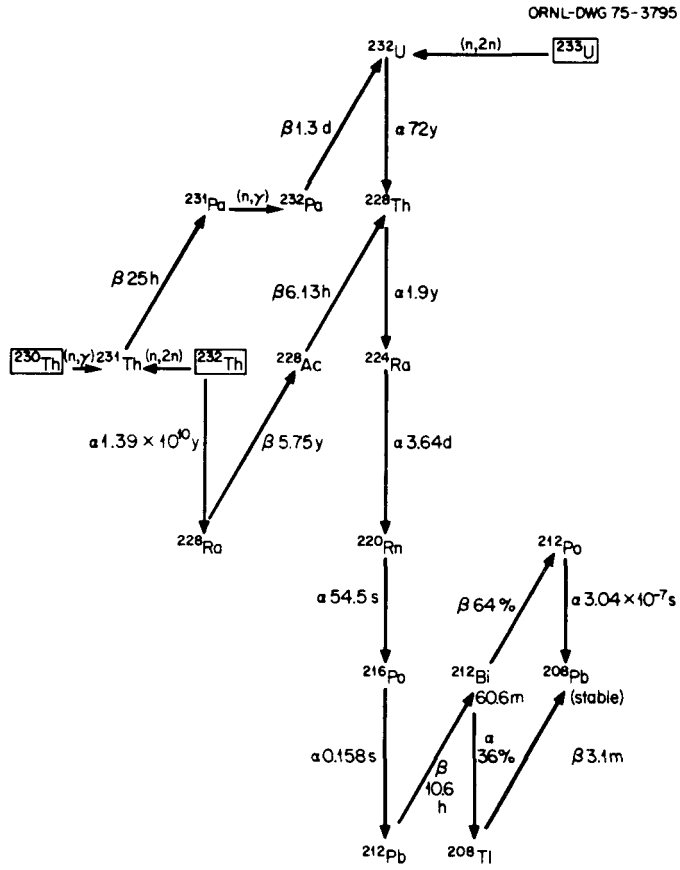

Fig. 2. Production and Decay Chains for ^{232}U.

The range of ^{232}U concentrations in the recycled uranium varies from 100 to 1200 ppm U, depending on the neutron flux, the neutron fluence, the neutron energy spectrum, and the ^{232}Th, ^{230}Th, and ^{233}U concentrations in the source fuel elements. The content of ^{230}Th is an important variable because the production of ^{232}U from ^{230}Th requires only two successive neutron captures, whereas ^{232}U production from ^{233}U or ^{232}Th requires an $(n,2n)$ reaction. The $(n,2n)$ reaction is a threshold reaction, so that only neutrons above 6.37 MeV for ^{232}Th and above 6.00 MeV for ^{233}U can contribute to the production of ^{232}U from these two nuclides. Conversely, the capture reactions have no thresholds. The ^{230}Th content of natural thorium depends on the thorium ore source, specifically the ratio of uranium to thorium in the ore bed (^{230}Th is in the ^{238}U decay chain). Typical ^{230}Th concentrations are less than 100 ppm of total thorium. Under equilibrium recycle conditions, ^{230}Th concentrations of 0 and 100 ppm result in ^{232}U concentrations in recycled 23R uranium of 309 and 940 ppm, respectively.[4]

---

[4]W. Davis, Jr., R. E. Blanco, B. C. Finney, G. S. Hill, R. E. Moore, and J. P. Witherspoon, *Correlation of Radioactive Waste Treatment Costs and The Environmental Impact of Waste Effluents in the Nuclear Fuel Cycle — Reprocessing of High-Temperature Gas-Cooled Reactor Fuel Containing ^{233}U and Thorium*, report in preparation.

A ^{232}U content of 400 ppm has been assumed for this study. Since the radioactivity of the recycle ^{233}U is approximately proportional to its ^{232}U content, the activity associated with recycle ^{233}U containing other than 400 ppm ^{232}U can easily be estimated by the reader.

For the purpose of this study, we assumed that ^{220}Rn was the only ^{232}U decay product released from the fuel during refabrication. However, recent work has indicated that ^{212}Pb, ^{212}Bi, and ^{224}Ra may also be released from the fuel particles during microsphere conversion and coating. Jackson et al.,[5] found that 100% of the ^{220}Rn was released at temperatures above 400°C, that significant amounts of ^{212}Pb and ^{212}Bi were released at temperatures above 800°C, and that a small amount of ^{224}Ra was released at 1700°C.

We assume that all the vaporized ^{232}U decay products except ^{220}Rn will condense in the scrubbers and can be treated at particulates. Since ^{212}Pb and ^{212}Bi are decay products of ^{220}Rn, the amounts of these particulates passing through the scrubbers will not contribute significantly to that resulting from the decay of ^{220}Rn. The release of ^{224}Ra, a precursor of ^{220}Rn, would reduce the ^{220}Rn releases in subsequent processing steps. Thus, the assumption that only ^{220}Rn is released from the ^{233}U fuel is realistic with respect to overall releases.

The recycle fuel fabrication plant is expected to contain both local and central effluent treatment systems. These treatment systems will contain chemical scrubbers and high-efficiency particulate air (HEPA) filters. We assumed that all HEPA filters have a removal efficiency of 99.9% for particulate matter. Additionally, we assumed that condensers and scrubbers remove 90% of the particulates that are entrained in the off-gas streams.

PROCESS DESCRIPTION

The following dections describe a future High-Temperature Gas-Cooled Reactor fuel refabrication plant. The effluent treatment systems mentioned in the process descriptions are described later under "Central Effluent Treatment System."

Resin Fuel Kernel Preparation

Resin fuel kernel preparation, illustrated in Fig. 3, consists of acid-deficient uranyl nitrate (ADUN) solution preparation, resin loading, and resin drying. The first step in ADUN preparation consists of extracting

---

[5]P. B. Jackson, H. H. Ficke, S. A. Reber, and C. I. Tech, *Determination of ^{232}U Daughter Product Release Rates from HTGR Fuel During Refabrication*, ORNL-MIT-206 (Dec. 17, 1974), report available from MIT Practice School, Oak Ridge National Laboratory.

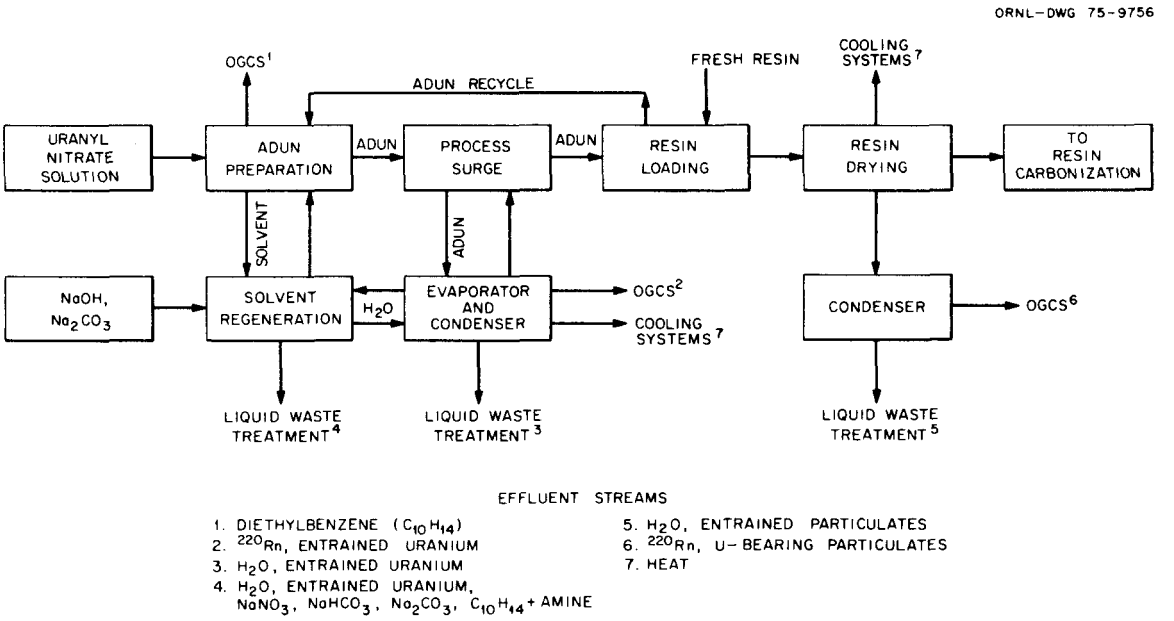

Fig. 3. Resin Fuel Kernel Preparation. OGCS designates off-gas cleanup system. ADUN is acid-deficient uranyl nitrate.

nitrate ions from the uranyl nitrate feed solution in a single-stage concurrent extraction with 0.27 *M* Amberlite LA-2 (a secondary amine) in diethylbenzene. The newly formed ADUN is separated from the organic solvent and sent to a process surge tank. The organic solvent used in ADUN preparation is sent to solvent regeneration. The equipment used in ADUN preparation is vented to the off-gas cleanup system.

Solvent regeneration consists of three steps: (1) a water wash to remove the small amount of dissolved or entrained uranium, (2) a caustic carbonate wash to remove nitrate and regenerate the amine, and (3) a water wash to remove any entrained caustic from step (2). The liquid wastes from solvent regeneration are sent to the liquid waste treatment system.

Uranyl ions (UO_2^{2+}) are loaded onto the weak-acid resin particles in a batch process. ADUN solution flows through the bed of resin particles for approximately 4 hr to ensure that all particles are fully loaded. The excess ADUN solution is returned to the ADUN preparation circuit. The excess water, which enters the system with feed solution and the resin particles, is removed by evaporation. A portion of the evaporator condensate is used in solvent regeneration, and the remainder is sent to the liquid waste treatment system.

The loaded resin is dried in a microwave dryer. The drying cycle is controlled so that the dried resin contains a small amount (≈12%) of moisture, which aids in eliminating static electrical charges on the particles. The dryer off-gas is condensed, and the condensate is sent to the liquid waste treatment system. The noncondensable vapor is sent to the off-gas cleanup system. The loaded and dried resin particles are pneumatically transferred to the resin carbonization system.

Effluents from Resin Fuel Kernel Preparation

Figure 3 also shows the sources of the effluents from resin fuel kernel preparation. The quantities of these effluents per kilogram of uranium processed are given in Table 3. From the vapor pressure of diethylbenzene, we estimate that a portion of it will be lost as a gas in stream 1. Stream 3, which contains the water evaporated from the ADUN, will be sent to the liquid waste treatment system. This water will mechanically entrain about 10^{-6} of the uranium processed.

The quantities of ^{220}Rn in streams 2 and 6 were calculated by the method described in the Appendix. The assumptions used to estimate the ^{220}Rn releases in streams 2 and 6 are as follows:

1. The holdup in ADUN preparation and resin loading is 2.5 times the batch size.
2. All the ^{220}Rn produced is released continuously for 4 hr during ADUN preparation and resin loading.
3. During the 4 hr of resin drying, all the ^{220}Rn produced is released.

The uranium-bearing particulates in streams 2 and 6 result from mechanical entrainment in the gaseous effluent. The quantities of uranium-bearing particulates in streams 2 and 6 were calculated by assuming that the condensers remove 90% of the entrained particulates that are present in the off-gas entering the condensers.

Stream 4 contains the waste from solvent regeneration and is sent to the liquid waste treatment system. We assumed that the water wash removed 90% of the uranium that was present in the used solvent. Stream 5 contains the water removed from the kernels during drying and is sent to the liquid waste treatment system. We assumed that 10^{-4} of the batch will be entrained in this water as particulates. These particulates are assumed to be approximately 50% U and 50% resin by weight.

Stream 7 contains the waste heat, which will be sent to the cooling systems. These releases were estimated to be 200% of the heat required to evaporate the water in the individual process steps.

Resin Fuel Kernel Carbonization

Resin fuel kernel carbonization, illustrated in Fig. 4, consists of upgrading (size and shape classification), characterization, and carbonization of the resin fuel kernels. The first step in this process is to characterize and upgrade the loaded resin. If the loaded fuel kernels do not meet product specifications, they are processed to reclaim the uranium.

The resin particles are carbonized by heating to 800°C in an argon atmosphere. As the particles are heated, volatile hydrocarbons and decomposition products are released. The fuel kernel loses approximately one-third of its weight as it is converted to carbon and uranium dioxide. The carbonization furnace off-gas is vented to a local off-gas treatment system consisting of a perchloroethylene (C_2Cl_4) scrubber, a heat exchanger, and a high-efficiency particulate air (HEPA) filter. The C_2Cl_4 scrubber

Table 3. Effluents from Resin Fuel Kernel Preparation per Kilogram of Uranium Processed

Effluent Stream	Description	^{233}U Recycle[a]	^{235}U Recycle	Effluent Treatment System
1	Diethylbenzene ($C_{10}H_{14}$), scf	5.0×10^{-3}	5.0×10^{-3}	Off-gas cleanup system
	Std liters	0.141	0.141	
2	^{220}Rn, Ci[b]	3.1×10^{2}	0	Off-gas cleanup system
	Entrained U, kg	1×10^{-7}	1×10^{-7}	
3	H_2O, liters	15	15	Liquid waste treatment
	Entrained U, kg	1×10^{-6}	1×10^{-6}	
4	H_2O, liters	10.0	10.0	Liquid waste treatment
	$NaNO_3$, kg	1.0	1.0	
	$NaHCO_3$, kg	0.3	0.3	
	Na_2CO_3, kg	0.6	0.6	
	Organic, kg[c]	5×10^{-3}	5×10^{-3}	
	Entrained U, kg	5×10^{-5}	5×10^{-5}	
5	H_2O, liters	1.0	1.0	Liquid waste treatment
	Entrained particulates, kg			
	Uranium	1×10^{-4}	1×10^{-4}	
	Resin	1×10^{-4}	1×10^{-4}	
6	^{220}Rn, Ci[b]	126	0	Off-gas cleanup system
	Entrained particulates, kg			
	Uranium	1×10^{-5}	1×10^{-5}	
	Resin	1×10^{-5}	1×10^{-5}	
7	Waste heat, Btu			Cooling systems
	ADUN preparation	2.8×10^{5}	2.8×10^{5}	
	Drying	2.0×10^{4}	2.0×10^{4}	
8	Waste heat, J			Cooling systems
	ADUN preparation	3.0×10^{8}	3.0×10^{8}	
	Drying	2.1×10^{7}	2.1×10^{7}	

[a] ^{232}U content = 400 ppm; 90 days after ion exchange cleanup.

[b] Average release.

[c] Amine + $C_{10}H_{14}$.

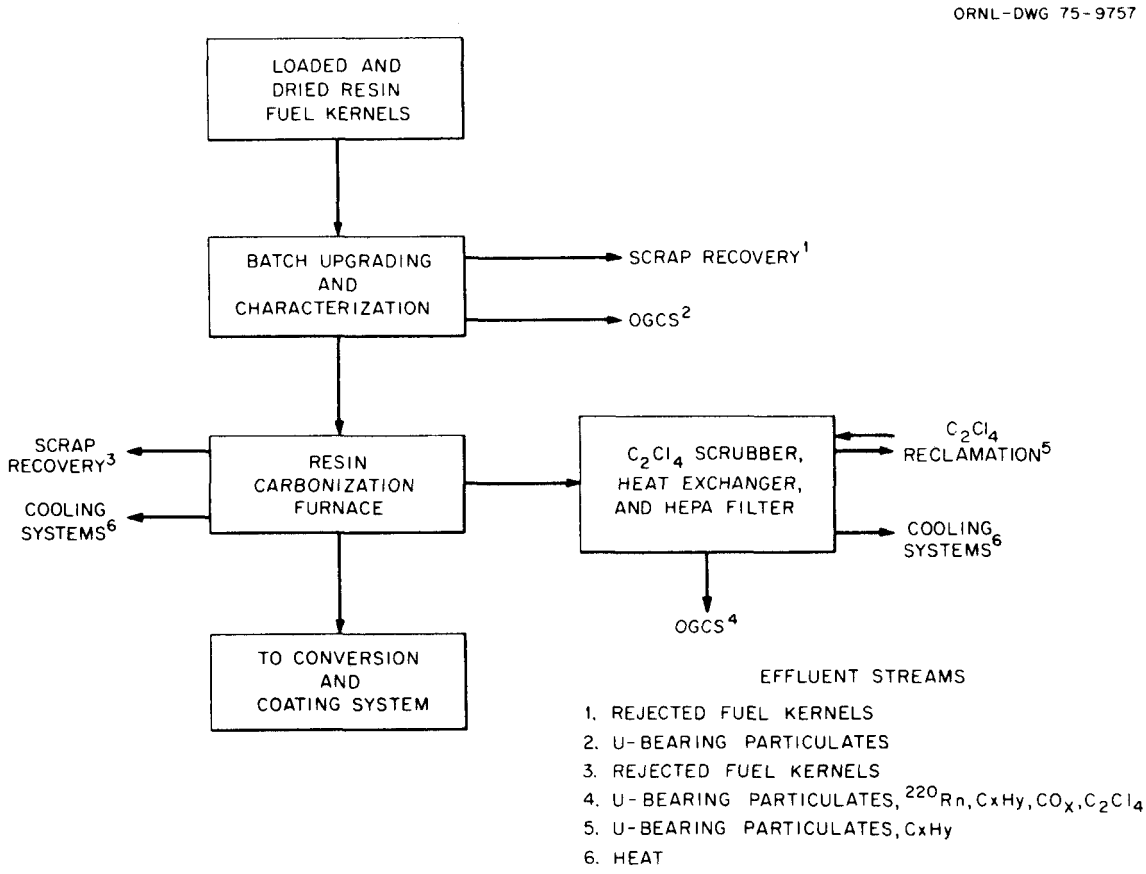

Fig. 4. Resin Fuel Kernel Carbonization.

removes essentially all the condensable hydrocarbons and 90% of the particulates. The condensed hydrocarbons and the entrained particulates are removed from the C_2Cl_4 in the C_2Cl_4 reclamation system. After the furnace off-gas is treated locally, it is sent to the plant off-gas cleanup system (OGCS).

The carbonized resin fuel kernels are then sampled for quality assurance inspection. After the particles are carbonized, they are pyrophoric and must be handled in a protective atmosphere. Acceptable kernels are sent to the conversion and coating system under an argon blanket. Rejected fuel kernels are sent to the scrap recovery system where the pyrophoric particles undergo controlled oxidation, prior to further processing to reclaim the uranium.

Effluents from Resin Fuel Kernel Carbonization

The effluent streams from resin carbonization are shown in Fig. 4. The quantities of effluents per kilogram of uranium processed are given in Table 4. Stream 1 contains the fuel kernels rejected during size and shape

Table 4. Effluents from Resin Fuel Kernel Carbonization per Kilogram of Uranium Processed

Effluent Stream	Description	^{233}U Recycle[a]	^{235}U Recycle	Effluent Treatment System
1	Rejected fuel kernels, kg			Scrap recovery
	Uranium	0.07	0.07	
	Resin	0.07	0.07	
2	Uranium-bearing particulates, kg			Off-gas cleanup system
	Uranium	1×10^{-6}	1×10^{-6}	
	Resin	1×10^{-6}	1×10^{-6}	
3	Rejected fuel kernels, kg			Scrap recovery
	Uranium	5×10^{-2}	5×10^{-2}	
	Resin	2.2×10^{-2}	2.2×10^{-2}	
4	Uranium-bearing particulates, kg			Off-gas cleanup system
	Uranium	1×10^{-6}	1×10^{-6}	
	Resin	4.3×10^{-7}	4.3×10^{-7}	
	^{220}Rn, Ci[b]	250	0	Off-gas cleanup system
	Noncondensable C_xH_y, scf[c]	8.8	8.8	
	Std. liters	250	250	
	C_2Cl_4, scf	1.84×10^{-2}	1.84×10^{-2}	
	Std. liters	0.52	0.52	
5	Condensed C_xH_y, kg	0.333	0.333	C_2Cl_4 reclamation
	Uranium-bearing particulates, kg			C_2Cl_4 reclamation
	Uranium	0.01	0.01	
	Resin	4.4×10^{-3}	4.4×10^{-3}	
6	Heat, Btu	8.2×10^{4}	8.2×10^{4}	Cooling systems
	Heat, J	8.6×10^{7}	8.6×10^{7}	

[a] ^{232}U content = 400 ppm; 90 days after ion exchange cleanup.

[b] Average release.

[c] Assumed to be C_2H_6.

classification before carbonization. Normally, 2% of the material is rejected. But occasionally an entire batch must be rejected. We estimate that on the average, an entire batch will be rejected 5% of the time. Therefore, an average of 7% of the material processed enters stream 1.

The only effluents entering stream 2 are particulates that become airborne during particle size and shape classification. We expect that the classification equipment and ventilation system will be designed so that no more than 0.1% of the material will reach a local HEPA filter.

Stream 3 contains the resin kernels that were rejected after carbonization. An estimated average of 5% of the kernels will be rejected at this step. These kernels will be sent to the scrap recovery system.

Streams 4, 5, and 6 contain the effluents produced during normal operation of the carbonization furnace. The thermal effluent, stream 6, is dissipated in cooling towers. The maximum amount of heat that could be released from the cooling towers is the thermal equivalent of the consumed electrical energy. This corresponds to 24 kWhr/kg of uranium processed (86 MJ/kg).

The untreated furnace off-gas contains ^{220}Rn, 1% of the batch as particulates, and one-third of the weight of the loaded kernels as hydrocarbons. The ^{220}Rn release rate was calculated by the method described in the Appendix. We assumed that all ^{220}Rn releases could be estimated by assuming that the release of radon in stream 4 equaled 100% of the radon production rate, and that this release rate would occur for 8 hr during resin carbonization. The C_2Cl_4 scrubber condenses approximately one-half of the volatile hydrocarbons and removes 90% of the particulates in the off-gas stream. After leaving the scrubber, stream 4 contains 100% of the ^{220}Rn, 0.1% of the batch as particulates, one-sixth of the kernels' weight as noncondensable hydrocarbons, and an estimated 0.1% of the C_2Cl_4 that is used in the scrubber. Before stream 4 is sent to the plant off-gas treatment system, it passes through a local HEPA filter.

Stream 5 is sent to the C_2Cl_4 solvent reclamation system to remove the condensed hydrocarbons and the entrained particulates.

Resin Conversion and Microsphere Coating Process

The resin conversion and microsphere coating process is illustrated in Fig. 5. During resin conversion, the fuel kernels are converted from UO_2 interspersed in a carbon matrix to a multiphase material containing UC_2, UO_2, U(C,O), and residual carbon. The exact composition of the kernel to be used in recycle fuel has not been determined. But for estimating the effluents, we assumed that it will contain the following molar proportions: three moles of uranium dicarbide (UC_2), one mole of uranium dioxide, and six moles of residual carbon. Resin is converted at 1500 to 1700°C under an argon atmosphere. After conversion, the particles are sampled to ensure product quality. Acceptable particles are returned to the furnace for microsphere coating. Unacceptable particles are sent to the scrap recovery system.

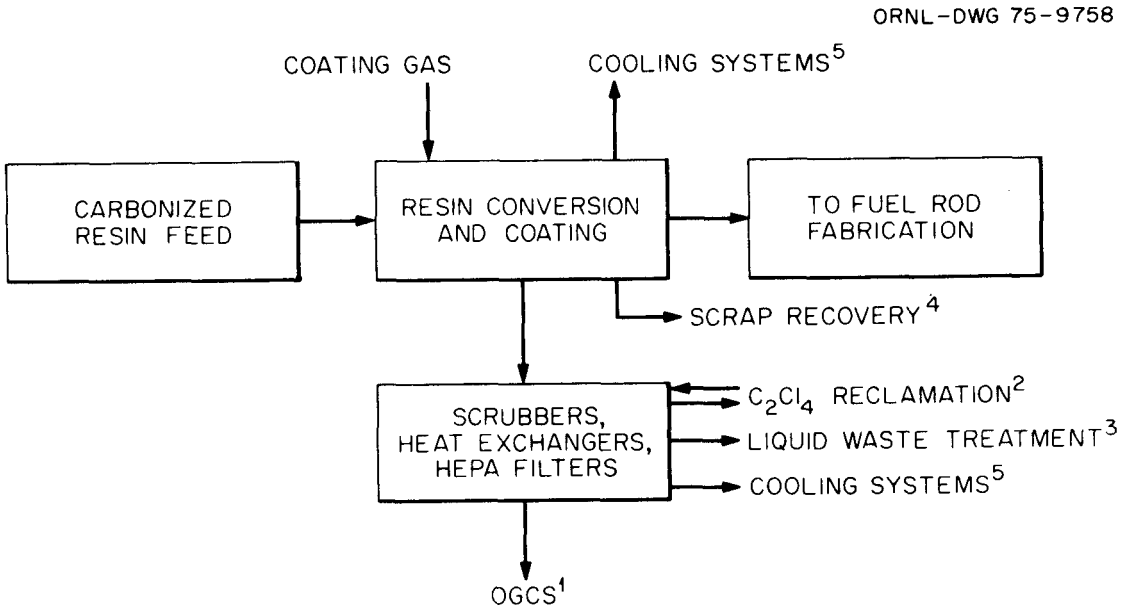

EFFLUENT STREAMS

1. ^{220}Rn, PARTICULATES, H_2, CO, CO_2, C_2Cl_4
2. U-BEARING PARTICULATES, SOOT
3. NaCl, NaOH, H_2O
4. REJECT PARTICLES, CARBON SOOT
5. HEAT

Fig. 5. Resin Conversion and Coating System

Microsphere coating consists of applying three carbon coatings and one SiC coating to provide fission product retention. The first coating is a low-density pyrolytic carbon coating, called the buffer coat, which is applied by decomposing acetylene (C_2H_2) in an argon atmosphere at 1400°C. The second layer is a high-density carbon coating called the inner isotropic, which is deposited by decomposing propylene (C_3H_6) in an argon atmosphere at 1400°C. The third layer is SiC, which is deposited by decomposing methyltrichlorosilane (CH_3SiCl_3) to HCl and SiC in a hydrogen atmosphere at 1400°C. The fourth layer is a high-density carbon coating called the outer isotropic, which is deposited in the same manner as the inner isotropic.

A local off-gas treatment system is required for the coating furnace. Waste heat is removed by a heat exchanger, while a perchloroethylene (C_2Cl_4) scrubber removes carbon soot, condensable hydrocarbons, SiC, and particulates. The solvent from this scrubber is sent to the C_2Cl_4 reclamation system to remove the entrained material. During SiC coating, a caustic scrubber, NaOH in water, converts the HCl in the off-gas to NaCl. The used caustic is sent to the liquid waste treatment system. The scrubbed gaseous effluent from all coating operations is filtered by a high-efficiency particulate air (HEPA) filter before being exhausted to the plant off-gas cleanup system (OGCS).

After all four coatings have been applied and the microspheres have have been certified as acceptable, they are sent to the fuel rod fabrication system. Since the coated microspheres are not pyrophoric, they do not need a protective atmosphere.

Effluents from Resin Conversion and Microsphere Coating

The effluent streams from the resin conversion and microsphere coating process are shown in Fig. 5. The quantities of effluents per kilogram of uranium processed are given in Table 5.

Streams 1, 2, 3, and 5 contain the effluents produced during normal operation of the conversion and coating furnace. The thermal effluents, stream 5, are dissipated in cooling towers. The maximum amount of heat resulting from this process that could be released from the cooling towers is approximately equal to the thermal equivalent of the consumed electrical energy. This corresponds to 750 kWhr (2.7 GJ) per kilogram of uranium converted and coated.

The untreated off-gas from the conversion and coating furnace contains ^{220}Rn, 0.1% of the batch as particulates, carbon, and silicon carbide soot, hydrocarbons, CO, CO_2, H_2, and HCl. A C_2Cl_4 scrubber removes the condensable hydrocarbons, carbon, SiC soot, and 90% of the entrained particulates. The C_2Cl_4 solvent, stream 2, is sent to the C_2Cl_4 reclamation system to remove the soot, condensable hydrocarbons, and the particulates. A caustic scrubber, NaOH in water, removes the HCl from the off-gas stream by converting it to NaCl. The resulting caustic-salt-solution, stream 3, is sent to the liquid waste treatment system. Before entering the plant off-gas cleanup system, (OGCS), the off-gas stream passes through a HEPA filter, which removes 99.9% of the entrained particulates.

The treated off-gas, stream 1, contains ^{220}Rn, 10^{-7} of the batch as particulates, CO, CO_2, H_2, and C_2Cl_4. The ^{220}Rn release was calculated by the method described in the Appendix. We assumed that all ^{220}Rn releases could be estimated by assuming that the release of radon in stream 4 equals 100% of the production rate, and that this release rate would occur for 5 hr during microsphere conversion and coating. The CO and CO_2 are released during conversion, while the H_2 is released during coating. The local scrubbers do not remove any of the CO, CO_2, and H_2. We estimated that 0.1% of the C_2Cl_4 solvent would evaporate into the off-gas stream.

Stream 4 contains rejected fuel particles and carbon soot. The rejection rates for conversion and coating were estimated as follows: conversion, 0.1%; buffer, 2.1%; inner isotropic, 2.1%; SiC, 2.1%; outer isotropic, 2.1%; and an average of 10% from upgrading the lot after all the coatings have been applied.

Fuel Rod Fabrication

Fuel rod fabrication, illustrated in Fig. 6, consists of particle dispensing and blending, fuel rod molding, and fuel rod inspection. The coated fissile particles, which are received from microsphere conversion and coating, are blended with pyrolytic-carbon-coated fertile (ThO_2)

Table 5. Effluents from Microsphere Conversion and Coating per Kilogram of Uranium Processed

	Stream and Component	Quantity[a]	Effluent Treatment System
1	^{220}Rn, Ci[b]		Off-gas cleanup system
	Conversion	79	
	Buffer	39	
	Inner isotropic	39	
	Total	157	
	Uranium-bearing particulates		
	U, kg		Off-gas cleanup system
	Conversion	1×10^{-7}	
	Buffer	1×10^{-7}	
	Inner isotropic	1×10^{-7}	
	SiC	1×10^{-7}	
	Outer isotropic	1×10^{-7}	
	Total	5×10^{-7}	
	C, kg		Off-gas cleanup system
	Conversion	4.3×10^{-8}	
	Buffer	2.2×10^{-8}	
	Inner isotropic	6.7×10^{-8}	
	SiC	1.44×10^{-7}	
	Outer isotropic	2.8×10^{-7}	
	Total	5.6×10^{-7}	
	Gases, scf (std liters)		Off-gas cleanup system
	CO, CO_2 from conversion[c]	3.0 (84)	
	C_2Cl_4	0.29 (8.2)	
	H_2		
	Conversion	0	
	Buffer	100 (2800)	
	Inner isotropic	270 (7600)	
	SiC	2000 (5.7×10^4)	
	Outer isotropic	360 (1.02×10^4)	
	Total	2700 (7.7×10^4)	
2	Uranium-bearing particulates		C_2Cl_4 reclamation system
	U, kg		
	Conversion	0.001	
	Buffer	0.001	
	Inner isotropic	0.001	
	SiC	0.001	
	Outer isotropic	0.001	
	Total	0.005	
	C, kg		
	Conversion	4.3×10^{-4}	
	Buffer	2.2×10^{-4}	
	Inner isotropic	6.7×10^{-4}	
	SiC	1.44×10^{-3}	
	Outer isotropic	2.8×10^{-3}	
	Total	5.6×10^{-3}	
	Soot, C, kg		C_2Cl_4 reclamation system
	Conversion	0	
	Buffer	1.22	
	Inner isotropic	1.64	
	SiC	0	
	Outer isotropic	2.2	
	Total	5.0	
	SiC, kg	0.21	

Table 5. (continued)

	Stream and Component	Quantity[a]	Effluent Treatment System
3	Caustic scrubber solvent		Liquid Waste Treatment
	Amount of liquid, liters	32	
	Dissolved solids		
	NaCl, kg	6.20	
	NaOH, kg	1.80	
4	Rejected particles		
	U, kg		Scrap recovery
	Conversion	0.001	
	Buffer	0.021	
	Inner isotropic	0.021	
	SiC	0.021	
	Outer isotropic	0.021	
	Lot upgrading	0.1	
	Total	0.185	
	C, kg		Scrap recovery
	Conversion	2.2×10^{-4}	
	Buffer	0.0140	
	Inner isotropic	0.030	
	SiC	0.060	
	Outer isotropic	0.084	
	Lot upgrading	0.40	
	Total	0.59	
	Carbon soot, kg		Scrap recovery
	Conversion	0	
	Buffer	0.23	
	Inner isotropic	0.31	
	SiC	0	
	Outer isotropic	0.41	
	Total	0.95	
5	Heat, Btu (J)		Cooling systems
	Conversion	3.4×10^5 (3.6×10^8)	
	Buffer	1.12×10^5 (1.19×10^8)	
	Inner isotropic	1.43×10^5 (1.51×10^8)	
	SiC	1.79×10^6 (1.89×10^9)	
	Outer isotropic	1.71×10^5 (1.80×10^8)	
	Total	2.6×10^6 (2.7×10^9)	

[a]All quantities listed are for both ^{233}U and ^{235}U recycle except that the ^{220}Rn effluent is zero for the ^{235}U recycle. In the ^{233}U recycle ^{232}U content is 400 ppm; 90 days after ion exchange cleanup.

[b]Average release per 24 hr.

[c]Assumed to be CO.

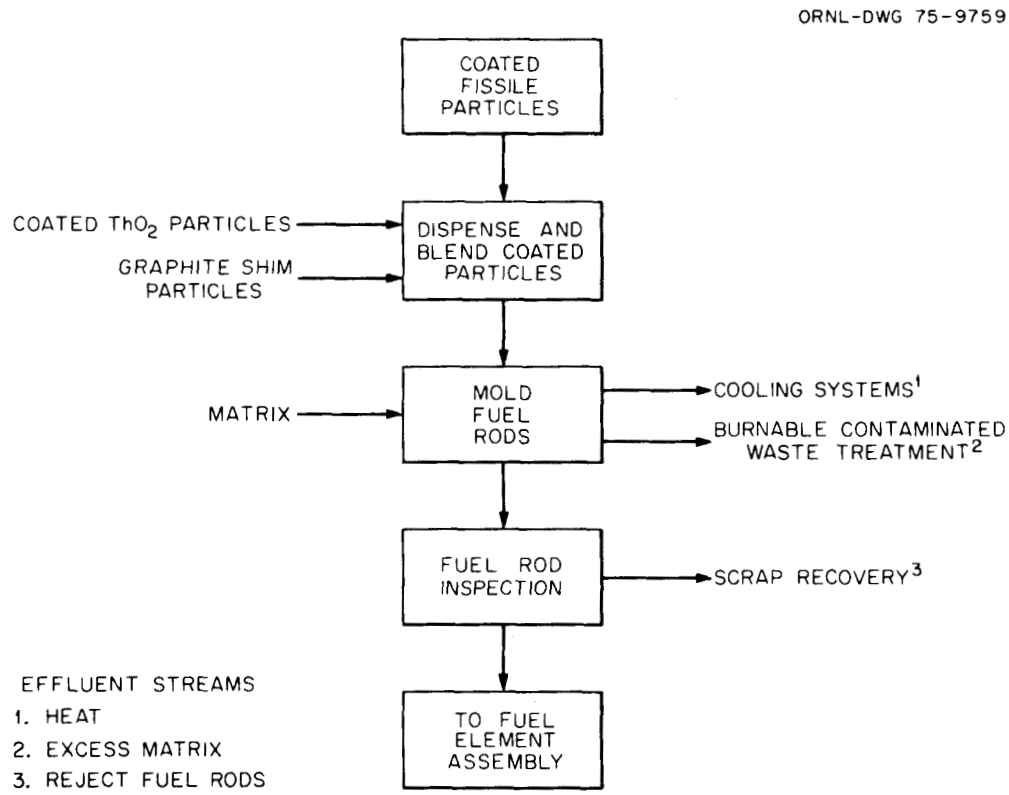

Fig. 6. Fuel Rod Fabrication

particles and graphite shim particles before fuel rod molding. The fertile particles are received from a fresh fuel plant, and the graphite shim particles are procured commercially.

In fuel rod fabrication, measured quantities of fissile, fertile, and shim particles are dispensed, blended, and loaded into a mold. Fuel rods are molded by injecting a softened matrix, consisting of graphite powder in pitch, into the bed of particles in the mold. The matrix is injected at a temperature of 160 to 180°C with a pressure of about 1000 psi (7 MPa). After the mold is cooled to solidify the matrix, the green fuel rods are ejected from the mold. Excess matrix material extruded from the mold after the particle bed is filled with matrix will be sent to the burnable contaminated waste treatment system. Waste heat from fuel rod fabrication is removed by a local heat exchanger.

Fuel rod inspection consists of determining the following: fuel rod dimensions, homogeneity, surface integrity, and heavy metal content. Acceptable fuel rods are sent to fuel element assembly, while rejected fuel rods are processed to recover the uranium.

Effluents from Fuel Rod Fabrication

Figure 6 shows the sources of the effluents from fuel rod fabrication, while Table 6 gives the quantities of the effluents per kilogram of uranium processed. Stream 1 contains the waste heat from heating the molds during fuel rod fabrication. The maximum amount of heat that could be released from the cooling towers is approximately equal to the thermal equivalent of the consumed electrical energy. This corresponds to 0.02 kWhr (72 Kj) per fuel rod.

Stream 2 contains the excess matrix material extruded from the mold after injection of the particle bed is complete. We estimate that 1.0 g of matrix per fuel rod fabricated will be sent to the burnable contaminated waste treatment system. Stream 3 contains the fuel rods rejected during fuel rod inspection. An estimated 2% of the fuel rods fabricated will enter stream 3. The rejected fuel rods will be processed to recover the uranium.

Table 6. Effluents from Fuel Rod Fabrication per Kilogram of Uranium Processed

Stream	Description	Sources from: ^{233}U Recycle	Sources from: ^{235}U Recycle	Effluent Treatment System
1	Waste heat, Btu	1.38×10^5	3.1×10^4	Cooling systems
	J	1.45×10^8	3.3×10^7	
2	Excess matrix, kg	2.11	0.48	Burnable contaminated waste treatment system
3	Reject fuel rods, kg			Scrap recovery
	U	0.02	0.02	
	Th	0.024	0.043	
	C	0.74	0.155	
	Si	0.020	0.020	
	O	0.034	0.0066	

Fuel Element Assembly

Fuel element assembly, illustrated in Fig. 7, consists of loading green fuel rods into the fuel elements; carbonizing and annealing the fuel rods; fuel element cleaning; loading poison rods, end plugs, and dowels; and fuel element inspection, packaging, and storage.

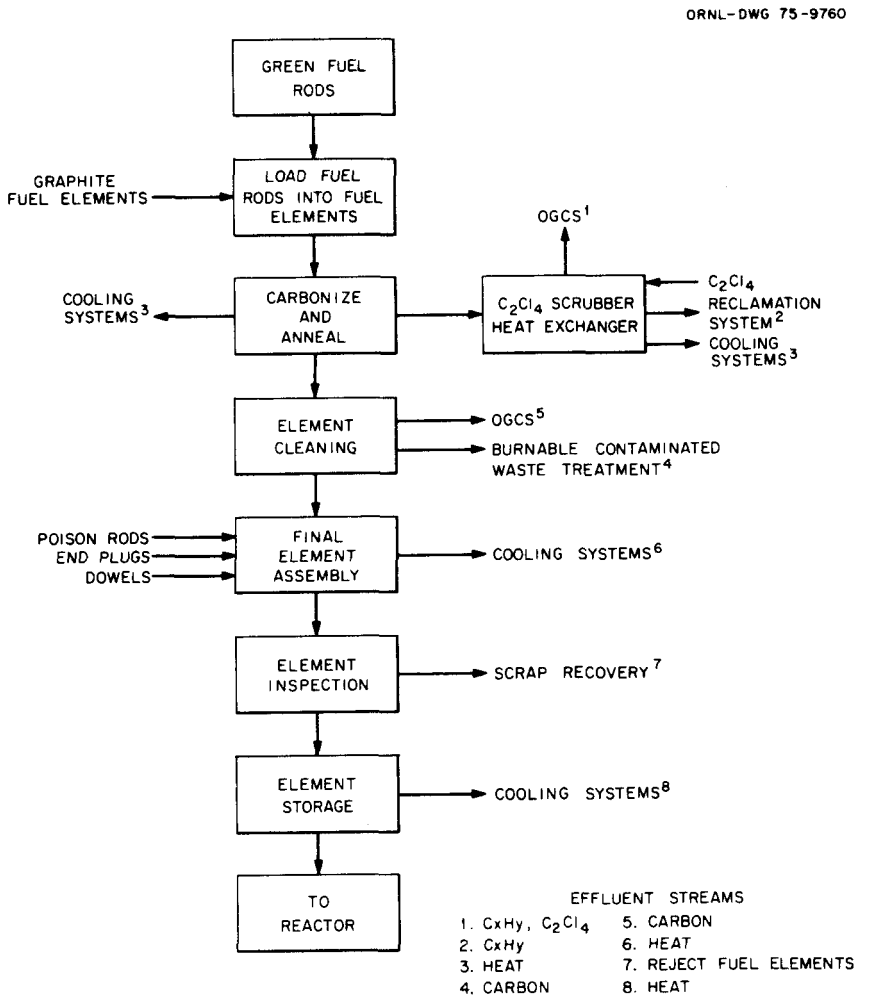

Fig. 7. Fuel Element Assembly.

Green fuel rods are received from fuel rod fabrication and loaded into hexagonal prismatic graphite fuel elements, approximately 31 in. tall and 14 in. across the flats (0.79 × 0.36 m).

The current reference process involves in-block carbonization of the fuel rods. This is accomplished by heating the loaded fuel elements to 800°C in an argon atmosphere to carbonize the pitch binder. During carbonization, about 35% of the binder (3.25 kg per fuel element) will be released as volatile hydrocarbons and decomposition products. A local off-gas treatment system, a perchloroethylene (C_2Cl_4) scrubber and heat exchanger, will remove the volatile hydrocarbons, decomposition products, and heat from the furnace gaseous effluent. The treated off-gas is then sent to the plant off-gas cleanup system.

After carbonization, the fuel element remains in the furnace and is annealed by heating to 1800°C in an argon atmosphere to remove residual volatiles and stabilize the dimensions of the fuel rods. The gaseous effluent is treated in the off-gas treatment system described above.

The fuel elements are cleaned after annealing to remove the carbonized pitch material from the surfaces and coolant holes. This surface fouling must be removed to prevent excessive pressure drop through the coolant holes. The carbonized material is quite friable and can be readily removed with a relatively soft bristle brush. A vacuum system will collect the carbonized material removed from the fuel element. The effluent from the vacuum system passes through a roughing filter before being released to the plant off-gas cleanup system. The solid material collected by the vacuum system roughing filter will be sent to the burnable contaminated waste treatment system.

Final element assembly consists of loading poison rods, end plugs, and dowels. Graphite cement is first applied to the end plugs and dowels. After insertion of the end plugs and dowels, the graphite cement is cured by heating to 150°C for 1 hr. The waste heat will be released to a local heat exchanger.

Fuel element inspection consists of verifying the physical integrity of the fuel element and checking for surface contamination. Fuel element integrity is verified by visual inspection. Surface contamination is determined by wiping the surface with an appropriate smearing medium and and inserting the smear sample into a shielded instrument for counting. Rejected fuel elements will be sent to the reprocessing plant to reclaim the uranium.

The fuel elements are packaged before being stored. Packaging consists of inserting the fuel elements into a shipping container and installing the required cushioning material. Each container will hold two fuel elements. The packaged fuel elements are then stored until shipment to an operating HTGR. The decay heat from the storage area is released to a local heat exchanger.

Effluents from Fuel Element Assembly

Figure 7 shows the sources of the effluents from fuel element assembly, while Table 7 gives the quantities of effluents per kilogram of uranium processed. Streams 3, 6, and 8 contain waste heat, which will be dissipated in the cooling towers. Stream 3 contains the heat from carbonization and annealing; stream 6 contains the heat from curing the graphite cement; and stream 8 contains the decay heat from the packaged fuel elements. The releases in streams 3 and 6 were calculated by assuming that the maximum amount of heat that could be released was equal to the thermal equivalent of the consumed electrical energy. This corresponds to 150 kWhr (540 MJ) per fuel element in stream 3 and 2 kWhr (7.2 MJ) per fuel element in stream 6. The releases in stream 8 were calculated by determining the heat release due to alpha and beta decay of the uranium isotopes and their daughters. A conservative estimate of 0.1 kWhr (0.36 MJ) per element-day was used.

Streams 1 and 2 contain the effluents from normal operation of the carbonization and annealing furnace. During carbonization of the pitch binder in the fuel rods, an estimated 3.25 kg of volatile hydrocarbons and decomposition products will be released per fuel element carbonized.

Table 7. Effluents from Fuel Element Assembly per Kilogram of Uranium Processed

Stream	Description	Sources from		Effluent Treatment System
		^{233}U Recycle	^{235}U Recycle	
1	Gases, scf (std liters)			Off-gas cleanup system
	C_xH_y	11.6 (330)	2.6 (75)	
	C_2Cl_4	0.22 (6.2)	0.049 (1.4)	
2	Condensable C_xH_y, kg	3.9	0.90	C_2Cl_4 reclamation system
3	Waste heat, Btu	6.9×10^5	1.57×10^5	Cooling systems
	J	7.3×10^8	1.66×10^8	
4	Carbon soot, kg	0.085	0.0194	Burnable contaminated waste treatment
5	Carbon soot, kg	9.4×10^{-3}	2.16×10^{-3}	Off-gas cleanup system
6	Waste heat, Btu	9.2×10^3	2.1×10^3	Cooling systems
	J	9.7×10^6	2.2×10^6	
7	Reject fuel elements, kg			Reprocessing plant
	U	0.01	0.01	
	Th	0.119	0.22	
	C	1.47	0.33	
	Si	9.8×10^{-3}	9.8×10^{-3}	
	O	0.0168	3.3×10^{-3}	
8	Waste heat, Btu	460	105	Cooling systems
	J	4.8×10^5	1.11×10^5	

Approximately 90% of this is condensable and is removed in the C_2Cl_4 scrubber. Stream 2 contains the condensed hydrocarbons, which will be removed from the C_2Cl_4 in the C_2Cl_4 reclamation system. The treated off-gas stream, stream 1, which contains noncondensable C_xH_y and C_2Cl_4, is sent to the plant off-gas cleanup system. We estimate that 0.1% of the C_2Cl_4 in the scrubber will be present in stream 1 by evaporation.

Streams 4 and 5 contain the carbonized pitch that was removed from the fuel elements during element cleaning. We estimate that 70 g of carbon will be removed from each fuel element and that 10% will enter the OGCS as carbon soot. The remainder will be sent to the burnable contaminated waste treatment system for burning. Stream 7 contains rejected fuel elements, which will be sent to the reprocessing plant to recover the uranium. An estimated 1% of the fuel elements will enter stream 7.

Scrap Recovery

The scrap recovery system, illustrated in Fig. 8, reclaims the uranium that is contained in process rejects. Four types of reject material will be handled in this system: (1) fuel particles rejected before the SiC coating was applied, (2) fuel particles rejected after the SiC coating was applied, (3) green fuel rods, and (4) assembled and annealed fuel elements.

The first type of rejects will contain uncarbonized resin, carbonized resin, buffer-coated fuel particles, and inner-isotropic-coated fuel particles. Since some of this material will be pyrophoric, it must be stored under an argon atmosphere. Table 8 lists the amount of this type of reject material that must be processed in this subsystem. The first step in processing the first type of reject material is to oxidize it at 800°C, removing the carbon as CO_2, removing the hydrocarbons as CO_2 and H_2O, and converting the uranium to U_3O_8. Local off-gas treatment consists of a heat exchanger, a roughing filter, and an HEPA filter.

The second type of reject material will contain SiC-coated and outer-isotropic-coated fuel. Table 8 lists the amounts of material entering this subsystem. The first step in processing this material is to burn the outer isotropic coating away to expose the SiC coatings. Local off-gas treatment consists of a heat exchanger, a roughing filter, and an HEPA filter. The fuel particles are then crushed to break the silicon carbide coating before being processed in a manner similar to the first type of reject material. The crushed particles are pyrophoric and must be transferred under an argon atmosphere.

After oxidation, the ash from both types of reject material is leached with nitric acid to remove the uranium. The undissolved solids (residual unburned SiC) are separated from the leachate in a centrifuge, washed, and sent to the nonburnable contaminated waste treatment system. The wash solution is combined with the leachate, which is assayed to determine the uranium content. Following assay, the uranium solution is sent to the solvent extraction system at the reprocessing plant.

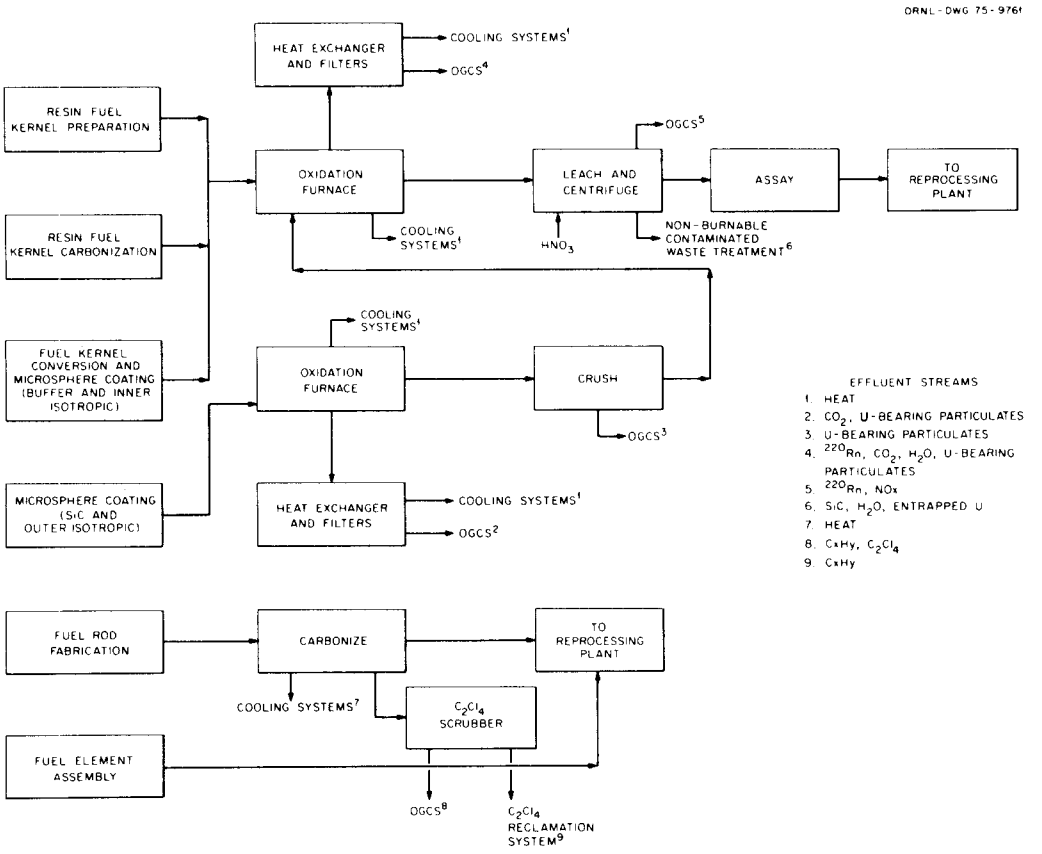

Fig. 8. Scrap Recovery.

The third type of reject material, green fuel rods, must be carbonized before it can be sent to the head end of the reprocessing plant. Table 8 lists the amount of material that must be processed in this subsystem. The carbonization furnace contains a local off-gas treatment system consisting of a heat exchanger and a perchloroethylene scrubber.

The fourth type of reject material, assembled fuel elements, requires no further treatment and can be sent directly to the head end of the reprocessing plant. Table 8 lists the material that will be contained in the rejected fuel elements.

Effluents from Scrap Recovery

Figure 8 shows the sources of effluents from the scrap recovery system. The amount of material processed in this system depends on (1) the size of the refabrication plant, and (2) the individual process rejection rates, which determine the gross production requirements of

Table 8. Material Entering Scrap Recovery System

Type and Description of Reject	Amount per kg U Processed,[a] kg					Scaling Factor[b]	Amount per kg U Product,[a] kg				
	U	C	O	Si	Th		U	C	O	Si	Th
1 Loaded, dried resin	0.070	0.078[c]				1.429	0.100	0.112[c]			
Carbonized resin	0.050	0.0132	6.8×10^{-3}			1.328	0.066	0.0175	9.1×10^{-3}		
Converted resin	1.0×10^{-3}	1.85×10^{-4}	3.4×10^{-5}			1.248	1.25×10^{-3}	2.3×10^{-4}	4.3×10^{-5}		
Buffer coating	0.021	0.0131	7.3×10^{-4}			1.247	0.026	0.0164	9.1×10^{-4}		
Inner isotropic	0.021	0.030	7.2×10^{-4}			1.220	0.026	0.036	8.8×10^{-4}		
Carbon soot		0.60				1.247		0.74			
2 SiC coating	0.021	0.039	7.3×10^{-4}	0.021		1.195	0.025	0.046	8.7×10^{-4}	0.025	
Outer isotropic	0.021	0.065	7.5×10^{-4}	0.021		1.170	0.025	0.076	8.8×10^{-4}	0.024	
Lot upgrading	0.10	0.31	3.6×10^{-3}	0.098		1.145	0.114	0.35	4.1×10^{-3}	0.113	
Carbon soot		0.41				1.170		0.48			
3 Green fuel rods											
23R	0.020	0.74[d]	0.034	0.020	0.24	1.031	0.021	0.76	0.35	0.020	0.25
25R	0.020	0.155[d]	6.6×10^{-3}	0.020	0.043	1.031	0.021	0.160	6.8×10^{-3}	0.020	0.044
4 Fuel Elements											
23R	0.0100	1.47	0.0168	9.8×10^{-3}	0.119	1.010	0.0101	1.48	0.0169	9.9×10^{-3}	0.120
25R	0.0100	0.33	3.3×10^{-3}	9.8×10^{-3}	0.022	1.010	0.0101	0.33	3.4×10^{-3}	9.9×10^{-3}	0.022

[a] Same for 23R and 25R unless otherwise indicated.

[b] Based on process loss fractions.

[c] Mass of resin having composition $C_6O_2H_6$.

[d] Assumes matrix is 100% C.

the individual system. Since it is not convenient to describe the effluents from scrap recovery on a per kilogram of uranium processed basis as was done for the main process steps in the previous sections, Table 9 lists the quantities of effluents from scrap recovery on a per kilogram of uranium product basis.

Stream 1 contains the thermal effluents released from the oxidation furnaces. These releases were calculated by assuming release of (1) the thermal equivalent of the consumed electrical energy, and (2) the heat from exothermic chemical reactions.

Stream 2 contains the gaseous effluent from the oxidation furnace used to remove the outer isotropic coating from coated fuel particles. Excess oxygen is assumed present, so that all exposed carbon is oxidized to carbon dioxide. We also assumed that the furnace and roughing filter are designed so that an estimated 0.1% of the uranium present in the burner ash would reach a local HEPA filter, and that the HEPA filter provides an additional decontamination factor of 10^3.

Stream 3 contains the effluents produced during the crushing of the SiC coatings on the type 2 reject material. We assumed that the crushing equipment is designed so than an estimated 0.1% of the uranium present would reach a local HEPA filter, and that the HEPA filter provided an additional decontamination factor of 10^3.

Stream 4 contains the gaseous effluent from the main oxidation furnace. Excess oxygen is assumed present, so that all combustible materials are converted to CO_2 and H_2O, with the resultant burner ash containing U_3O_8 and SiC. The ^{220}Rn release rate was calculated by the method described in the Appendix. We assumed that the radon release rate equals 100% of its production rate for 1 hr during oxidation. The amount of particulates entering stream 4 was calculated by assuming that the furnace and roughing filter are designed so that an estimated 0.1% of the uranium present in the burner ash would reach a local HEPA filter, and that the HEPA filter provides an additional decontamination factor of 10^3.

Stream 5 contains the gaseous effluent from the leaching operations. The ^{220}Rn release rate was calculated by the method described in the Appendix. We assumed that the radon release rate equals 100% of its production rate for 1 hr during leaching operations. The NO_x releases were calculated by (1) assuming 1.0% of the consumed nitrate was lost as NO_x and (2) assuming the NO_x to be NO_3. Stream 6 contains the undissolved solids (SiC hulls) from the leaching operations. We assumed that 0.01% of the total uranium present in the dissolver would remain with the SiC hulls. We also assumed that the water remaining with the SiC was 10% by weight of total solids present.

Streams 7, 8, and 9 contain the effluents from carbonizing the green fuel rods. The thermal effluents, stream 7, were calculated by assuming that the maximum amount of heat that could be released was equal to the thermal equivalent of the consumed electrical energy. This corresponds to 0.096 kWhr (0.35 MJ) per fuel rod carbonized. During carbonization of the pitch binder in the fuel rods, we estimate that 2.075 g of volatile hydrocarbons and decomposition products will be released per fuel rod carbonized. Approximately 90% of this is condensable and is removed by a C_2Cl_4 scrubber. Stream 9 contains the noncondensable hydrocarbons and C_2Cl_4. We assumed that 0.1% of the C_2Cl_4 used in the scrubber will be present in stream 8 because of evaporation.

Table 9. Effluents from Scrap Recovery per Kilogram of Uranium Product

Stream	Description	Sources from ^{233}U Recycle	Sources from ^{235}U Recycle	Effluent Treatment System
1	Waste heat, Btu	1.004×10^5	1.004×10^5	Cooling systems
	J	1.058×10^8	1.058×10^8	
2	CO_2, scf (std liters)	43.03 (1226)	43.03 (1226)	Off-gas cleanup system
	Particulates, kg			
	U	1.64×10^{-7}	1.64×10^{-7}	
	Solids	4.7×10^{-7}	4.7×10^{-7}	
3	Particulates, kg			Off-gas cleanup system
	U	1.64×10^{-7}	1.64×10^{-7}	
	Solids	4.7×10^{-7}	4.7×10^{-7}	
4	^{220}Rn, Ci[a]	12.0	0	Off-gas cleanup system
	CO_2, scf (std liters)	74 (2100)	74 (2100)	
	H_2O, scf (std liters)	2.4 (68)	2.4 (68)	
	Particulates, kg			
	U	3.8×10^{-7}	3.8×10^{-7}	
	Solids	7.0×10^{-8}	7.0×10^{-8}	
5	^{220}Rn, Ci[a]	12.0	0	Off-gas cleanup system
	NO_x, scf (std liters)	0.026 (0.73)	0.026 (0.73)	
6	SiC, kg	0.23	0.23	Nonburnable contaminated waste treatment
	Entrapped U, kg	3.8×10^{-5}	3.8×10^{-5}	
	H_2O, kg	0.023	0.023	
7	Waste heat, Btu			Cooling systems
8	C_xH_y, scf (std liters)	0.24 (6.7)	0.054 (1.54)	Off-gas cleanup system
	C_2Cl_4, scf (std liters)	0.0045 (0.13)	0.0010 (0.028)	
9	C_xH_y, scf (std liters)	0.081 (2.3)	0.0186 (0.53)	C_2Cl_4 Reclamation system
Reprocessing plant	U, kg	0.38	0.38	Solvent extraction
Reprocessing plant	U, kg	0.031	0.031	Head-end
	Th, kg	0.37	0.066	

[a]Average release.

Finally Table 9 lists the amounts of recovered uranium and thorium, which will be sent to the solvent extraction and head-end systems of the reprocessing plant.

CENTRAL EFFLUENT TREATMENT SYSTEM

The refabrication plant central effluent treatment system, illustrated in Fig. 9, treats the effluent streams from the refabrication plant before their release. The components of the central effluent treatment system are as follows:

1. perchloroethylene reclamation,
2. burnable contaminated waste treatment,
3. nonburnable contaminated waste treatment,
4. liquid waste treatment,
5. cooling systems,
6. off-gas cleanup.

The following sections describe these compoents.

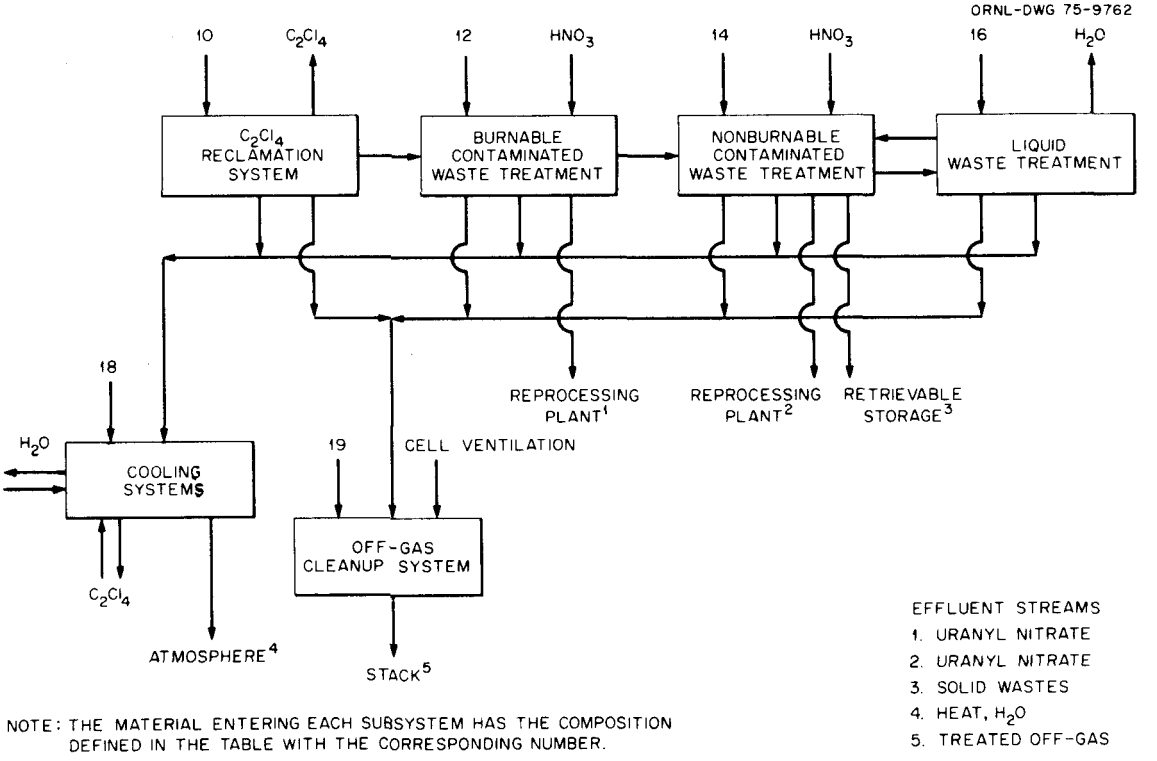

Fig. 9. Refabrication Plant Central Effluent Treatment System.

Perchloroethylene Reclamation System

The perchloroethylene (C_2Cl_4) reclamation system, illustrated in Fig. 10, removes impurities in the C_2Cl_4 so that it can be reused. Table 10 lists the material entering this subsystem. The first step in reclaiming the C_2Cl_4 is distillation. The distillate is collected in a surge tank, and the vapors from the surge tank are condensed in a chiller and returned to the surge tank. Before the off-gas is vented to the off-gas cleanup system, additional C_2Cl_4 is removed by the use of molecular sieve traps capable of being reactivated by steam stripping. The C_2Cl_4 removed from the traps is returned to the spent C_2Cl_4 surge tank.

The bottoms are removed from the still and are dried to a friable solid. The solids are sent to the burnable contaminated waste treatment system for further treatment. The off-gas from the bottoms dryer is scrubbed in a caustic scrubber to remove any hydrogen chloride that may be present. After scrubbing, the dried off-gas enters the chiller and is mixed with the surge tank off-gas.

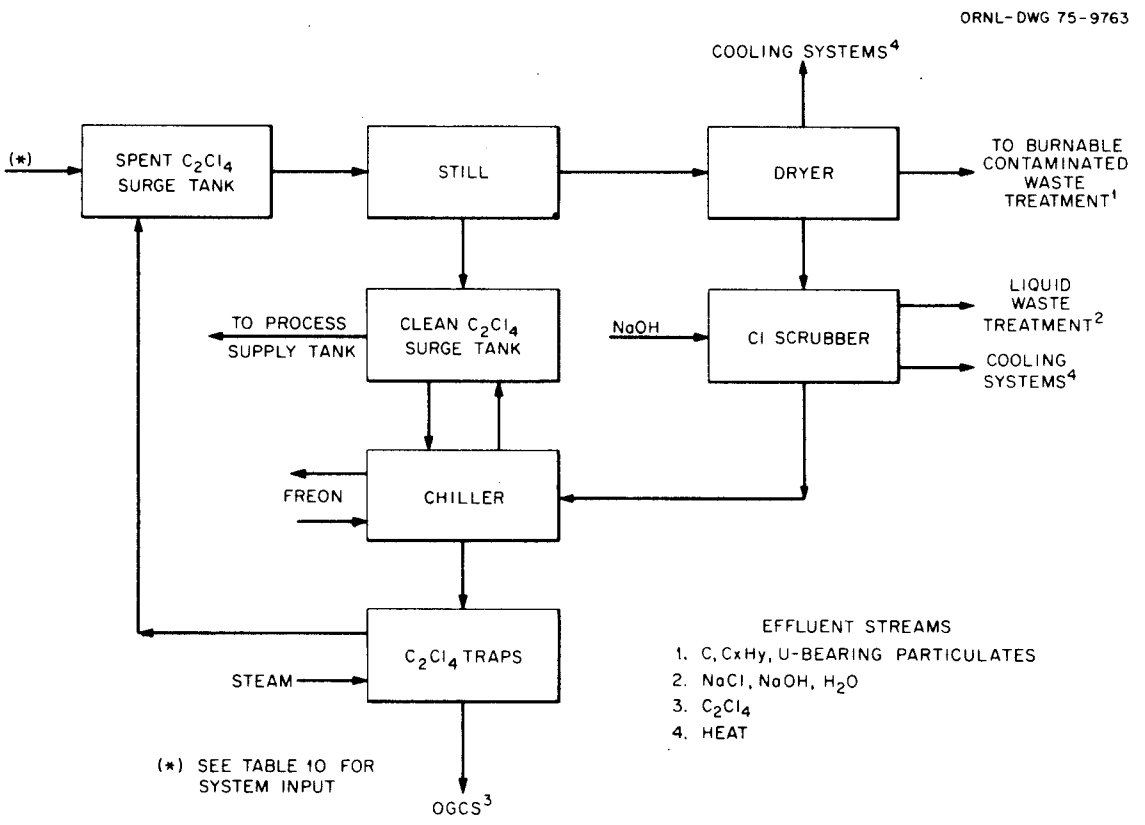

Fig. 10. Perchloroethylene Reclamation.

Table 10. Material Entering C_2Cl_4 Reclamation System per Kilogram of Uranium Product[a]

Source	C_2Cl_4 (kg)	Particulates, kg		C_xH_y (kg)	Soot (kg)
		U	Solids		
Resin carbonization	5.13	0.0133	5.8×10^{-3}	0.44	
Resin conversion and coating	76	0.0061	6.7×10^{-3}		6.3
Fuel element assembly	38			3.3	
Scrap recovery	0.77			0.067	
TOTALS	119	0.0194	0.0124	3.8	6.3

[a]Assuming a ratio of 23R to 25R of 3.34.

Figure 10 indicates the sources of the effluent streams from C_2Cl_4 reclamation, and Table 11 provides the quantities of effluents on a per kilogram of uranium product basis. Stream 1 contains the solids removed from the C_2Cl_4. Stream 2 contains the liquid waste from the chlorine scrubber. We estimated that 0.01% of the C_2Cl_4 would decompose and be removed in this scrubber. Stream 3 contains the C_2Cl_4 that was not removed by the molecular sieve traps. We assumed that the still, chiller, and traps provided a system decontamination factor of 10^6 for C_2Cl_4. Finally, stream 4 contains the estimated thermal releases from this system. They were calculated by determining the amount of heat required to (1) vaporize the C_2Cl_4, (2) heat the solids to the boiling point of C_2Cl_4, and (3) evaporate any H_2O present and by assuming that the equipment was 30% efficient.

Burnable Contaminated Waste Treatment

The burnable contaminated waste treatment system, illustrated in Fig. 11, will treat burnable material such as furnace liners, gas distributors, bottoms (soot) from the C_2Cl_4 reclamation system, and matrix flashings from fuel rod fabrication. Table 12 lists the material entering this system. The first step in this process is to crush the friable material to a size suitable for burning. The nonfriable material will not be crushed. The material is oxidized in the burner to convert it to CO_2, H_2O, and U_3O_8. Local off-gas treatment consists of a heat exchanger, a caustic scrubber, and a HEPA filter.

Table 11. Effluents from C_2Cl_4 Reclamation System per Kilogram of Uranium Product[a]

Stream	Description	Amount	Effluent Treatment
1	C, kg	6.3	Burnable contaminated waste treatment
	C_xH_y, kg	38	
	Particulates, kg		
	Uranium	0.0194	
	Solids	0.0124	
2	H_2O, liters	0.0125	Liquid waste treatment
	NaCl, kg	0.0168	
	NaOH, kg	4.2×10^{-3}	
3	C_2Cl_4, scf (std liters)	5.7×10^{-4} (2.0×10^{-3})	Off-gas cleanup system
4	Heat, Btu (J)	2.16×10^{5} (2.23×10^{8})	Cooling systems

[a]Assuming a ratio of 23R to 25R of 3.34.

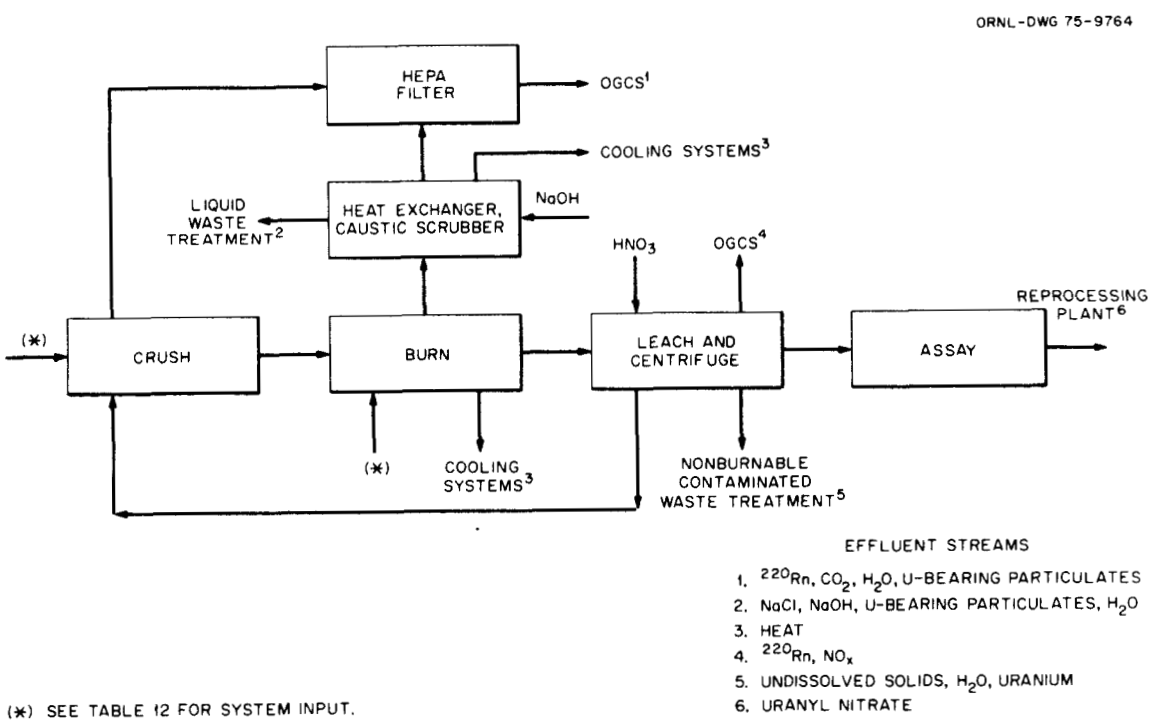

Fig. 11. Burnable Contaminated Waste Treatment.

Table 12. Material Entering Burnable Contaminated Waste Treatment System per Kilogram of Uranium Product[a]

Source	Quantity, kg			
	U	C	C_xH_y	Solids
Resin conversion and coating	7.5×10^{-4}	1.91		
Fuel rod fabrication		1.79		
Fuel element assembly		0.070		
Central effluent treatment	1.94×10^{-2}	6.3	3.8	0.0124
TOTALS	2.01×10^{-2}	10.1	3.8	0.0124

[a]Assuming a ratio of 23R to 25R of 3.34.

The burner ash is then leached with nitric acid to remove any uranium that is present as U_3O_8. The undissolved solids are separated from the leachate in a centrifuge and then screened to remove any intact SiC-coated fuel particles. The SiC particles are crushed before being burned. The remainder of the undissolved solids is sampled and then sent to the nonburnable contaminated waste treatment system for drying and packaging. The leachate is assayed before being sent to the solvent extraction system of the reprocessing plant.

Figure 11 indicates the sources of the effluent streams from burnable contaminated waste treatment, and Table 13 provides the quantities of effluents on a per kilogram of uranium product basis. Stream 1 contains the gaseous effluent from the crusher and the burner. The amount of particulates entering the off-gas was estimated by assuming that the crushing equipment and the burner are designed so that 0.1% of the material in the crusher and 0.01% of the burner ash would reach a local HEPA filter, which would provide an additional decontamination factor of 10^3. We assumed that excess oxygen is present so that all combustible material is converted to CO_2 and H_2O, with the resultant burner ash containing U_3O_8 and SiC. The ^{220}Rn release rate was calculated using the method described in the Appendix. The radon release rate was assumed equal to 100% of the production rate for 1 hr during burning.

Stream 2 contains the liquid wastes from the caustic scrubber. It removes 90% of the particulates entrained in the burner off-gas and also removes any chlorine that is present. We assumed that 0.01% of the C_2Cl_4 would remain with the solids from the C_2Cl_4 reclamation.

Stream 3 contains the thermal effluents from the burner. These releases were calculated by assuming that (1) the thermal equivalent of the consumed electrical energy is released and (2) the heat from exothermic chemical reactions is also released.

Table 13. Effluents from Burnable Contaminated Waste Treatment per Kilogram of Uranium Product[a]

Stream	Description	Amount	Effluent Treatment
1	^{220}Rn, Ci[b]	0.61	Off-gas cleanup system
	CO_2, scf (std liters)	890 (2.5×10^9)	
	H_2O, scf (std liters)	48 (1370)	
	Particulates, kg		
	Uranium	2.2×10^{-8}	
	Solids	2.9×10^{-6}	
2	Particulates, kg		Liquid waste treatment
	Uranium	2.0×10^{-8}	
	Solids	3.7×10^{-9}	
	H_2O, liters	0.125	
	NaCl, kg	0.0168	
	NaOH, kg	4.2×10^{-3}	
3	Heat, Btu (J)	1.57×10^6 (1.65×10^9)	Cooling systems
4	^{220}Rn, Ci[b]	0.61	Off-gas cleanup system
	NO_x, scf (std liters)	1.35×10^{-3} (0.038)	
5	Undissolved solids, kg	3.3×10^{-3}	Nonburnable contaminated waste treatment
	H_2O, kg	3.3×10^{-4}	
	Uranium, kg	2.0×10^{-6}	
6	Uranium, kg	2.0×10^{-4}	Reprocessing plant

[a]Assuming a ratio of 23R to 25R of 3.34.

[b]Average release.

Stream 4 contains the gaseous effluent from the leaching operations. The ^{220}Rn release rate was calculated by the method described in the Appendix. The radon release rate was assumed equal to 100% of its production rate for 1 hr during leaching operations. The NO_x releases were calculated by assuming (1) 1.0% of the consumed nitrate is lost as NO_x and (2) the NO_x is NO_3. Stream 5 contains the undissolved solids (primarily SiC hulls) from the leaching operations. We assumed that 1% of the total uranium present in the dissolver would remain with the SiC hulls. We also assumed that the water remaining with the SiC was 10% by weight of total solids present. Finally, stream 6 contains the uranyl nitrate solution, which is sent to the solvent extraction system of the reprocessing plant.

Nonburnable Contaminated Waste Treatment

The nonburnable contaminated waste treatment subsystem, illustrated in Fig. 12, provides the final treatment for contaminated solid wastes before they leave the refabrication plant. Table 14 lists the material entering this subsystem.

Since the HEPA filters used in the plant are expected to contain recoverable amounts of uranium, they will be shredded and leached to recover the uranium. The undissolved solids are separated from the leachate in a centrifuge, dried, sampled, packaged, and placed in retrievable storage. The leachate is assayed before being sent to the solvent extraction system of the reprocessing plant.

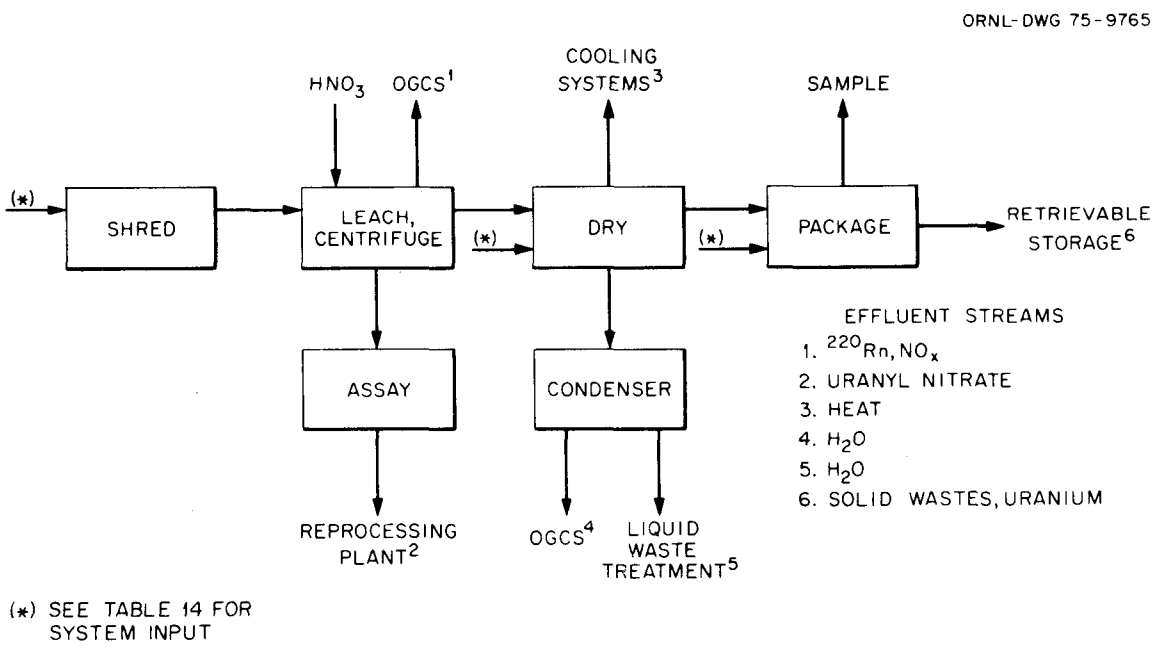

Fig. 12. Nonburnable Contaminated Waste Treatment.

Table 14. Material Entering Nonburnable Contaminated Waste Treatment per Kilogram of Uranium Product[a]

Source	Quantity, kg		
	U	Solids	H_2O
HEPA filters	4.5×10^{-3}	0.076	
Scrap recovery	3.8×10^{-5}	0.23	0.023
Liquid waste treatment	2.2×10^{-4}	12.3	6.2
Burnable contaminated waste	2.0×10^{-6}	3.3×10^{-3}	3.3×10^{-4}
Miscellaneous solid wastes		1.98	
TOTALS	4.8×10^{-3}	14.6	6.2

[a]Assuming a ratio of 23R to 25R of 3.34.

Another type of waste handled by the nonburnable contaminated waste treatment subsystem consists of nonburnable solids from scrap recovery, liquid waste treatment, and burnable contaminated waste treatment. These solids are dried, sampled, packaged, and placed in retrievable storage. The off-gas from the dryer is condensed, and the liquid is sent to the liquid waste treatment system. The noncondensable off-gas is vented to the off-gas cleanup system.

The third type of waste handled by this system consists of miscellaneous solid wastes, such as manipulator boots. These solids are sampled, packaged, and placed in retrievable storage.

Figure 12 indicates the sources of the effluent streams from nonburnable contaminated waste treatment, and Table 15 provides the quantities of effluents on a per kilogram of uranium product basis. Stream 1 contains the gaseous effluent from the leaching operations. The ^{220}Rn release was calculated by the method described in the Appendix. The radon release rate was assumed equal to 100% of its production rate for 1 hr during leaching operations. The NO_x releases were calculated by assuming (1) 1.0% of the consumed nitrate is lost as NO_x and (2) the NO_x is NO_3. Stream 2 contains the uranium recovered in the leaching operations.

Stream 3 contains the thermal releases from the dryer. These releases were estimated to be 200% of the heat required to evaporate the water from the solids. Stream 5 contains the water that is condensed from the evaporator off-gas. We assumed that 1% of the water would not be condensed and would be released in stream 4.

Stream 6 contains the dried solids and miscellaneous solid wastes, which will be placed in retrievable storage. These wastes are sampled, and the containers are labeled to assist in the ultimate fixation of these solid wastes.

Table 15. Effluents from Nonburnable Contaminated Waste Treatment per Kilogram of Uranium Product[a]

Stream	Description	Amount	Effluent Treatment
1	^{220}Rn, Ci[b]	0.141	Off-gas cleanup system
	NO_x, scf	3.1×10^{-4}	
	(std liters)	8.7×10^{-3}	
2	Uranium, kg	4.5×10^{-3}	Reprocessing plant
3	Waste heat, Btu	3.24×10^{4}	Cooling systems
	J	3.4×10^{7}	
4	H_2O, scf	2.7	Off-gas cleanup system
	(std liters)	77	
5	H_2O, liters	6.2	Liquid waste treatment
6	Solid wastes, kg	14.6	Retrievable storage
	Uranium, kg	3.0×10^{-4}	

[a]Assuming a ratio of 23R to 25R of 3.34.

[b]Average release.

Liquid Waste Treatment

The liquid waste treatment subsystem, illustrated in Fig. 13, converts all liquid wastes to process water, solids, and gas. Table 16 lists the material entering this subsystem. Surge capacity has been included because the evaporator will operate semicontinuously. After most of the water has been evaporated from the liquid waste, the resultant sludge will be sent to the nonburnable contaminated waste treatment subsystem for drying and packaging. The evaporator off-gas will be condensed, sampled, and sent to the process water supply tank. The noncondensable off-gas is vented to the off-gas cleanup system.

Figure 13 indicates the sources of the effluent streams, and Table 17 provides the quantities of effluents on a per kilogram of uranium product basis. Stream 1 contains the thermal releases from the evaporator. These releases were estimated to be 200% of the heat required to evaporate the water from the solids.

Stream 2 contains the solids removed from the evaporator. We assumed that the water remaining with the solids was 50% by weight of the solids. Stream 4 contains the evaporator condensate, while stream 3 contains the noncondensable off-gas. We assumed that 1% of the water was not condensed.

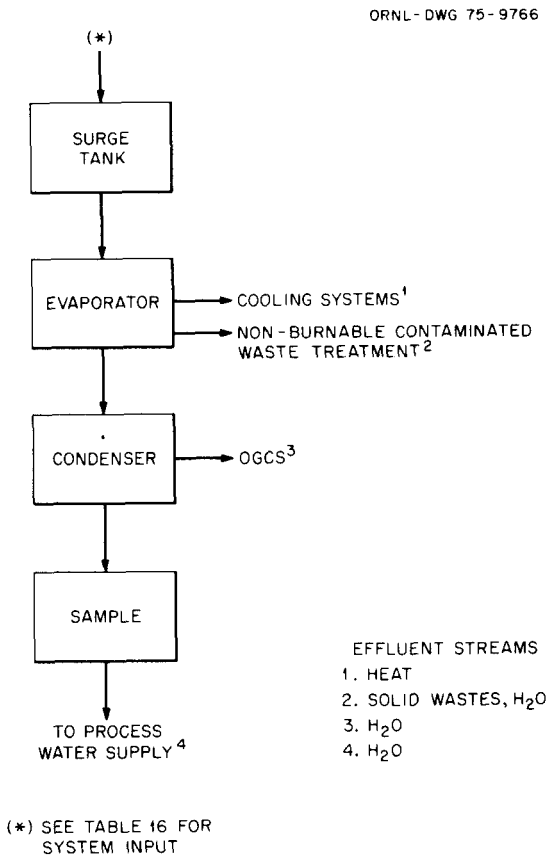

Fig. 13. Liquid Waste Treatment.

Cooling Systems

The plant cooling systems, illustrated in Fig. 14, dissipate waste heat to the atmosphere. Table 18 lists the amounts of process heat that will be dissipated in the cooling systems. In addition to the process heat sources, heat will be released from the building heating and air conditioning and process support systems. It is estimated that a plant producing fuel elements containing 84.42 kg of uranium daily will release a maximum of 7.3×10^7 Btu/hr (21 MW). This is composed of approximately 2.3×10^7 Btu/hr (6.7 MW) from process heat sources and 5.0×10^7 Btu/hr (14.4 MW) from all other sources, primarily heating and ventilation.

Perchloroethylene (C_2Cl_4) and water are used as the primary coolants, and water is used as the secondary coolant. The heat contained in the primary coolants is transferred to the secondary coolant in a closed-loop heat exchanger. The heat now contained in the secondary coolant is transferred to the cooling towers in a second closed-loop heat exchanger.

Table 16. Material Entering Liquid Waste Treatment System per Kilogram of Uranium Product[a]

Source	H_2O (liters)	Particulates, kg		Aqueous Solutes, kg					Organic[b] (kg)
		Uranium	Solids	$NaNO_3$	$NaHCO_3$	Na_2CO_3	NaCl	NaOH	
Resin fuel kernel preparation	37	2.2×10^{-4}	1.43×10^{-4}	1.43	0.43	0.86			7.1×10^{-3}
Fuel kernel conversion and coating	38						7.4	2.2	
C_2Cl_4 reclamation system	0.125						0.0168	4.2×10^{-3}	
Burnable contaminated waste treatment	0.125	2.0×10^{-8}	3.7×10^{-9}				0.0168	4.2×10^{-3}	
Nonburnable contaminated waste treatment	6.2								
TOTALS	81	2.2×10^{-4}	1.43×10^{-4}	1.43	0.43	0.86	7.4	2.2	7.1×10^{-3}

[a]Assuming a ratio of 23R to 25R of 3.34.

[b]Diethylbenzene and amine.

Table 17. Effluents from Liquid Waste Treatment per Kilogram of Uranium Product[a]

Stream	Description	Amount	Effluent Treatment
1	Waste heat, Btu	3.7×10^5	Cooling systems
	J	3.9×10^8	
2	Solid wastes, kg	12.3	Nonburnable contaminated waste treatment
	H_2O, kg	6.2	
	Uranium, kg	2.2×10^{-4}	
3	H_2O, scf	33	Off-gas cleanup system
	(Std liters)	94	
4	H_2O, liters	75	Process water supply
	Organic, kg	7.1×10^{-3}	

[a]Assuming a ratio of 23R to 25R of 3.34.

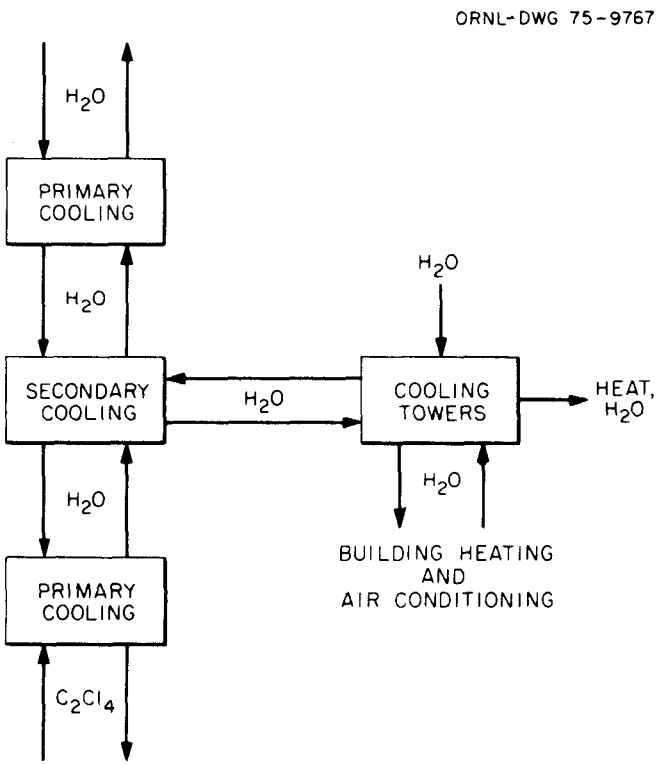

Fig. 14. Cooling Systems.

Table 18. Process Heat Dissipated in Cooling Systems per Kilogram of Uranium Product

Source	Heat Dissipated (Btu)	Heat Dissipated (J)	Primary Coolant
Resin fuel kernel preparation	4.3×10^5	4.6×10^8	H_2O
Resin fuel kernel carbonization	1.09×10^5	1.15×10^8	C_2Cl_4
Fuel kernel conversion and coating	3.1×10^6	3.2×10^9	C_2Cl_4
Fuel rod fabrication	1.17×10^5	1.23×10^8	C_2Cl_4
Fuel element assembly	5.1×10^5	5.5×10^8	C_2Cl_4
Reject reclamation	1.00×10^5	1.06×10^8	C_2Cl_4
C_2Cl_4 reclamation	2.2×10^5	2.3×10^8	H_2O
Burnable contaminated waste	1.57×10^6	1.65×10^9	H_2O
Nonburnable contaminated waste	3.2×10^4	3.4×10^7	H_2O
Liquid waste treatment	3.7×10^5	3.9×10^8	H_2O
TOTAL	6.5×10^6	6.9×10^9	

Finally, the heat that is contained in the cooling tower water is dissipated to the atmosphere. We estimate that a cooling system of this capacity will release approximately 215,000 gal (814 m^3) of water per day to the atmosphere. Of this, 75% will be released as vapor and 25% as blowdown.

Off-Gas Cleanup System

The off-gas cleanup system, illustrated in Fig. 15, provides the final treatment for gaseous effluents. Table 19 lists the effluents entering the off-gas cleanup system. The minimum treatment required for the plant off-gas consists of a ^{220}Rn delay trap, a roughing filter, and two HEPA filters in series. It is estimated that a minimum holdup time required for ^{220}Rn decay is 20 min, which provides a decontamination factor of 2.8×10^6. The roughing filter will protect the HEPA filters from buildup of particulates that might come from the radon trap. Two HEPA filters in series provide a decontamination factor of 10^6 for particulates.

Gaseous effluents such as C_2Cl_4, C_xH_y, H_2, and NO_x will be treated by dilution only. It is expected that the combustible off-gases will be vented from a separate stack. The cell ventilation, approximately 207,000 scfm (98 std m^3/sec) will be filtered by a roughing filter and two HEPA filters in series. Table 20 lists the gaseous effluents leaving the plant.

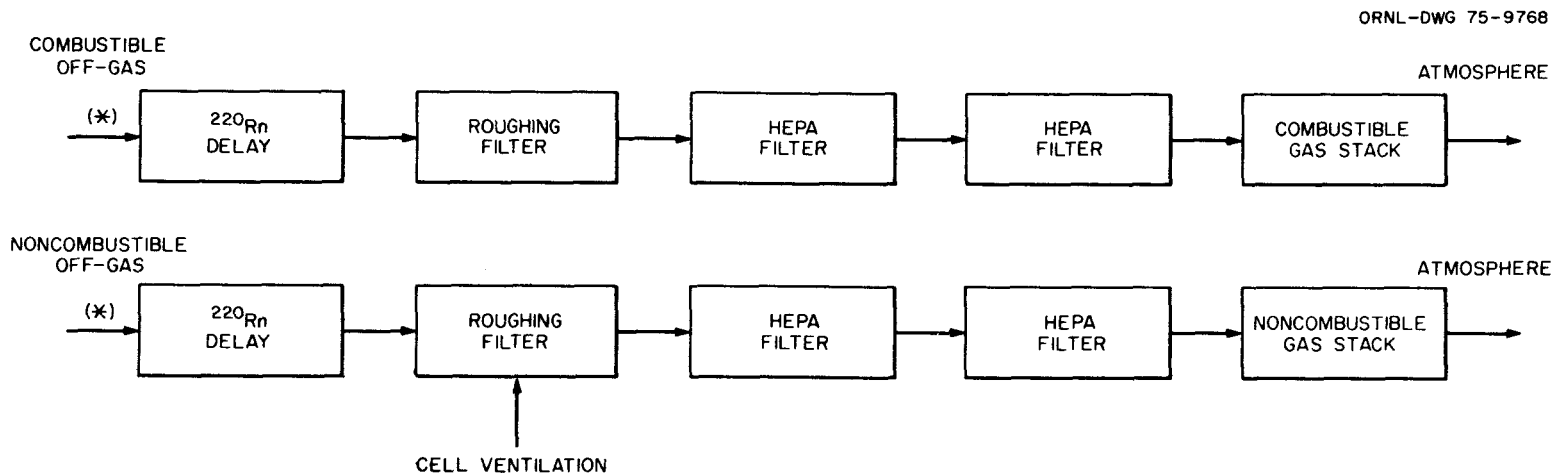

* SEE TABLE 19 FOR SYSTEM INPUT.

Fig. 15. Off-Gas Cleanup System.

Table 19. Effluents Entering Off-Gas Cleanup System per Kilogram of Uranium Product[a]

Source	^{220}Rn (Ci)	Particulates, kg		Gaseous Components, scf (std liters)						
		Uranium	Solids	C_2Cl_4	C_xH_y[b]	CO_x	H_2	NO_x[c]	H_2O	Inert Gas[d]
Resin fuel kernel preparation	630	1.44×10^{-5}	1.43×10^{-5}		8.4×10^{-5} (2.4×10^{-3})					350 (9800)
Fuel kernel carbonization	330	2.7×10^{-6}	1.90×10^{-6}	0.024 (0.69)	11.67 (330)					2.6×10^{3} (7.4×10^{4})
Fuel kernel conversion and coating	195	6.1×10^{-7}	6.7×10^{-7}	0.36 (10.2)		3.7[e] (106)	3.3×10^{3} (9.2×10^{4})			3.0×10^{3} (8.4×10^{4})
Fuel element assembly			7.8×10^{-3}	0.181 (5.1)	9.6 (270)					2.9×10^{3}[f] (8.3×10^{4})
Scrap recovery	24	7.1×10^{-7}	1.01×10^{-6}	3.7×10^{-3} (0.104)	0.196 (55)	117[g] (3300)		0.026 (0.73)	2.4 (68)	625 (1770)
C_2Cl_4 reclamation				5.7×10^{-4} (0.0161)						0[h]
Burnable contaminated waste	1.23	2.2×10^{-8}	2.9×10^{-6}			890[g] (2.5×10^{4})		1.35×10^{-3} (0.038)	48 (1370)	4.7×10^{3} (1.34×10^{5})
Nonburnable contaminated waste	0.141							3.1×10^{-4} (8.7×10^{-3})	2.7 (77)	460 (1310)
Liquid waste treatment									33 (940)	1.16×10^{3} (3.3×10^{4})
TOTALS	1180	1.84×10^{-5}	7.8×10^{-3}	0.57 (16.2)	21 (610)	1010 (2.9×10^{4})	3.3×10^{3} (9.2×10^{4})	0.027 (0.78)	87 (2500)	1.58×10^{4} (4.5×10^{5})

[a] Assuming a ratio of 23R to 25R of 3.34.

[b] Assumed to be C_2H_6.

[c] Assumed to be NO_3.

[d] Argon, N_2, He, air.

[e] Assumed to be CO.

[f] Includes fuel rod fabrication and pneumatic transfers.

[g] Assumed to be CO_2.

[h] Negligible flow.

Table 20. Gaseous Effluents Leaving Off-Gas Cleanup System per Kilogram of Uranium Product[a]

Effluent Description	Amount
^{220}Rn, Ci	4.2×10^{-4}
Particulates, kg	
Uranium	1.84×10^{-11}
Solids	7.9×10^{-9}
Gases, scf (std liters)	
C_2Cl_4	0.57 (16.2)
C_xH_y[b]	21 (610)
CO_x[c]	101 (2.9×10^4)
H_2	3.3×10^3 (9.2×10^4)
NO_x[d]	0.027 (0.78)
H_2O	87 (240)
Inert gas[e]	2.7×10^6 (7.7×10^7)

[a]Assuming a ratio of 23R to 25R of 3.34.

[b]Assumed to be C_2H_6.

[c]Assumed to be 0.37% CO and 99.63% CO_2.

[d]Assumed to be NO_3.

[e]Ar, N_2, He, Air; includes cell ventilation.

EFFLUENT SUMMARY

The effluents leaving the refabrication plant can be described as follows: (1) recovered scrap material, (2) solid waste material, (3) gaseous effluents, and (4) thermal effluents. The following sections summarize each of these types of effluents.

Recovered Scrap Material

Recovered scrap material, which is sent to the reprocessing portion of the recycle plant, consists of uranyl nitrate solutions, carbonized rejected fuel rods, and rejected fuel elements. Table 21 lists the sources of recovered scrap material on a per kilogram of uranium product basis.

Table 21. Recovered Scrap Material per Kilogram of Uranium Product[a]

Source	Amount, kg	
	Uranium	Thorium
Scrap recovery	0.41	0.37
Burnable contaminated waste treatment	2.0×10^{-4}	
Nonburnable contaminated waste treatment	4.5×10^{-4}	
TOTALS	0.42	0.37

[a]Assuming a ratio of 23R to 25R of 3.34.

Solid Waste Material

The solid waste material leaving the refabrication plant receives final treatment in the nonburnable contaminated waste treatment system. We estimate that 14.61 kg of solid waste per kilogram of uranium product will be placed in retrievable storage. It is expected that these solid wastes will be processed at an ERDA waste processing facility before ultimate disposal. We estimate that 3.0×10^{-4} kg of uranium per kilogram of uranium product will be associated with these solid wastes.

Gaseous Effluents

The gaseous effluents leaving the off-gas cleanup system may be considered as comprising chemical effluents and radioactive effluents. The list of chemical effluents can be obtained from Table 20 by deleting the entries for ^{220}Rn and uranium. Table 22 lists the radioactive effluents in terms of the individual nuclides.

Thermal Effluents

The thermal effluents from a plant producing fuel elements containing 84.42 kg of uranium daily will be about 7.3×10^7 Btu/hr (21 MW), with about 2.3×10^7 Btu/hr (6.7 MW) coming from process heat sources and 5.0×10^7 Btu/hr (14.4 MW) from all other sources, primarily heating and ventilation. A cooling system that will dissipate this amount of heat will release an estimated 215,000 gal (814 m^3) of water per day to the atmosphere. Of this, 75% will be released as vapor and 25% as blowdown.

Table 22. Radioactive Effluents Leaving Off-Gas Cleanup System per Kilogram of Uranium Product[a]

Nuclide	Amount (Ci)
^{208}Tl	9.2×10^{-8}
^{209}Pb	1.19×10^{-15}
^{210}Pb	9.5×10^{-26}
^{212}Pb	1.70×10^{-6}
^{212}Bi	3.3×10^{-7}
^{213}Bi	1.19×10^{-15}
^{212}Po	2.1×10^{-7}
^{216}Po	4.3×10^{-10}
^{220}Rn	4.2×10^{-4}
^{221}Fr	1.19×10^{-15}
^{223}Ra	3.0×10^{-23}
^{224}Ra	9.8×10^{-12}
^{225}Ra	1.49×10^{-15}
^{226}Ra	4.2×10^{-23}
^{228}Ra	1.84×10^{-26}
^{225}Ac	1.19×10^{-15}
^{227}Ac	7.7×10^{-23}
^{227}Th	4.4×10^{-23}
^{228}Th	1.04×10^{-11}
^{229}Th	1.94×10^{-15}
^{230}Th	4.5×10^{-17}
^{231}Th	6.3×10^{-15}
^{232}Th	1.45×10^{-24}
^{234}Th	1.86×10^{-16}
^{231}Pa	3.4×10^{-20}
^{234m}Pa[b]	1.86×10^{-16}
^{234}Pa	1.86×10^{-19}
^{232}U	1.21×10^{-10}
^{233}U	8.3×10^{-11}
^{234}U	2.1×10^{-11}
^{235}U	6.3×10^{-15}
^{236}U	1.70×10^{-13}
^{238}U	2.0×10^{-16}
TOTAL	4.2×10^{-4}

[a]Assuming a ratio of 23R to 25R of 3.34.

[b]Metastable state.

CONCLUSIONS AND RECOMMENDATIONS

This study has identified several areas where additional developmental work is needed, especially in scrap recovery and waste treatment. The following sections describe some of the areas where additional developmental work is needed.

Process Rejection Rates

Most of the rejection rates are based on current development work and the best estimates of the engineers who are doing that work. All the rejection rates must be verified for a commercial-size plant. Additionally, development work is needed to lower the process rejection rates whenever possible.

Furnace Off-Gas Characterization

The compositions of the off-gas streams presented in this study must be verified. The uranium losses and the hydrocarbon compositions need the most attention. Recently, a mass spectrometer has been installed on development equipment at ORNL to analyze the off-gas leaving the furnace and the scrubbers.

Scrap Recovery

The concepts presented in this study need to be experimentally verified. Currently, a development program is under way at ORNL to provide quantitative information with respect to the scrap recovery system. Of particular interest is material accountability and the purity of the recovered uranyl nitrate solutions.

Perchloroethylene Reclamation

Several alternate methods of C_2Cl_4 reclamation need to be examined. Probably the most important aspect of this system that needs additional development work is the problems associated with solids handling and burning. Currently, a development effort is under way in this area.

Burnable Contaminated Waste Treatment

A suitable method for burning both the solids from C_2Cl_4 reclamation and the disposable furnace parts needs to be developed. A development program is currently under way in this area. Of particular interest is the uranium associated with the burnable solids.

ACKNOWLEDGMENTS

The authors would like to acknowledge the assistance of the following engineers who provided assistance in obtaining the process descriptions and effluent characterization: F. E. Harrington, C. C. Haws, D. R. Johnson, W. J. Lackey, and A. J. Caputo. J. E. Rushton and S. R. McNeany provided assistance with the ^{220}Rn production and decay calculations. C. W. Kee performed ORIGEN computations, which were used to prepare Table 22. F. E. Harrington, J. E. Van Cleve, F. J. Homan, and K. H. Lin reviewed this document. S. Peterson provided technical editing and Julia Bishop of the Metals and Ceramics Division Reports Office prepared the manuscript for reproduction.

APPENDIX

Radon-220 Calculations

The production rate of ^{220}Rn was calculated by assuming that: (1) The disintigration rate of ^{224}Ra equals the production rate of ^{220}Rn. (2) The ^{233}U in the recycle stream contained 400 ppm of ^{232}U. (3) Ninety days had elapsed since the ^{233}U stream had been purified in an ion exchange process to remove the ^{232}U decay products. Table A-1 lists the activity of ^{224}Ra per gram of ^{232}U present for various times after purification.

Table A-1. ^{224}Ra Activity

Solution Age (days)	^{224}Ra Activity	
	Ci/g ^{232}U Present	% of 90-Day Activity
30	0.52	30
60	1.13	65
90	1.73	100
120	2.30	133

If different values for the ^{232}U content or solution aging are used, the ^{220}Rn production is directly proportional to the ^{232}U content and to the percent of the 90-day activity. The actual ^{220}Rn production rate calculation is as follows:

$$^{220}\text{Rn Activity} = \frac{1.73\ \text{Ci}}{\text{g}\ ^{232}\text{U}} \times (0.4\ \text{g}\ ^{232}\text{U}) = 0.692\ \text{Ci} \tag{1}$$

$$^{220}\text{Rn Production Rate} = (0.692\ \text{Ci})\lambda^{220}\text{Rn}^{(\text{sec}^{-1})}$$

$$= 0.692\ (0.0126)\ \text{Ci/sec} = 8.72 \times 10^{-3}\ \text{Ci/sec}\ . \tag{2}$$

The above production rate is for 1 kg of uranium in the ^{233}U recycle stream. The total amount of radon produced is found by multiplying the production rate by the time during which the radon is assumed to be released.

ORNL-TM-5059
UC-77 (Gas-Cooled
Reactor Technology)

INTERNAL DISTRIBUTION

1–2. Central Research Library
3. Document Reference Section
4–5. Laboratory Records Department
6. Laboratory Records, ORNL RC
7. ORNL Patent Office
8. G. M. Adamson, Jr.
9. P. Angelini
10. R. L. Beatty
11. L. L. Bennett
12–16. R. A. Bradley
17. A. J. Caputo
18. J. A. Carpenter
19. W. L. Carter
20. J. H. Coobs
21. W. H. Cook
22. F. L. Culler
23. J. E. Cunningham
24. F. C. Davis
25. W. Davis, Jr.
26. W. P. Eatherly
27. P. A. Haas
28. R. L. Hamner
29. C. C. Haws
30. F. E. Harrington
31. M. S. Hendricks
32. J. W. Hill
33–35. M. R. Hill
36. F. J. Homan
37. J. D. Jenkins
38. D. R. Johnson
39–48. M. S. Judd
49. M. J. Kania
50. P. R. Kasten
51. C. W. Kee
52. R. W. Knoll
53. W. J. Lackey
54. K. H. Lin
55. E. L. Long, Jr.
56. A. L. Lotts
57. J. E. Mack
58. S. R. McNeany
59. S. J. Mitchell
60. K. J. Notz
61–65. A. R. Olsen
66. W. H. Pechin
67. S. Peterson
68. H. Postma
69. J M Robbins
70. J. W. Roddy
71. J. E. Rushton
72. E. L. Ryan
73. T. F. Scanlan
74. J. D. Sease
75. J. W. Snider
76. D. P. Stinton
77. R. R. Suchomel
78. V. J. Tennery
79. W. E. Thomas
80. T. N. Tiegs
81. M. L. Tobias
82. D. B. Trauger
83. K. H. Valentine
84. J. E. Van Cleve
85. T. N. Washburn
86. G. W. Webber
87. J. R. Weir, Jr.
88. K. R. Young (Y-12)
89. W. C. Leslie (consultant)
90. John Moteff (consultant)
91. Hayne Palmour III (consultant)
92. J. W. Prados (consultant)
93. G. V. Smith (consultant)
94. D. F. Stein (consultant)

EXTERNAL DISTRIBUTION

95–96. USERDA DIVISION OF REACTOR RESEARCH AND DEVELOPMENT, Washington, DC 20545

Director

97–98. USERDA OAK RIDGE OPERATIONS OFFICE, P.O. Box E, Oak Ridge, TN 37830

Director, Reactor Division
Research and Technical Support Division

99–263. USERDA TECHNICAL INFORMATION CENTER, Office of Information Services, P.O. Box 62, Oak Ridge, TN 37830

For distribution as shown in TID-4500 Distribution Category, UC-77 (Gas-Cooled Reactor Technology).